This publication contains Parts Information for all 1981-86 Jeeps.

The use of this Parts Catalog and the arrangement of information herein is explained in the General Information Section as indexed below.

INDEX TO INFORMATION PAGES

- ABBREVIATIONS A-18-22
- ALPHABETICAL INDEX. . . . . A- 6
- CATALOG AND PARTS BULLETINS. . . . . A- 6
- DATE CORRELATION TABLES A-16
- ENGINE IDENTIFICATION NUMBERS. . . . . A- 7
- GROUP CONTENTS. . . . . A- 4
- HOW TO LOCATE PARTS. . . . . A- 3
- ILLUSTRATION INDEX. . . . . A- 6
- INTERIOR TRIM. . . . . A- 7
- LABEL LOCATION. . . . . A-8,10,12,&15
- METRIC CONVERSION TABLE A-17
- NEWPART INDEX. . . . . A- 6
- NUMERICAL INDEX. . . . . A- 6
- PAGE NUMBERING . . . . . A- 5
- PARTS CATALOG REVISION SERVICE. . . . . A- 6
- PARTS PACKAGES. . . . . A- 6
- RIGHT AND LEFT PART NUMBERS . . . . . A- 5
- SPECIFYING INFORMATION. . . . . A- 5
- STANDARD PARTS . . . . . A- 6
- SYMBOLS USED IN THIS CATALOG. . . . . A- 5
- TRANSMISSION MODEL & SERIAL NUMBER. . . . . A- 7
- VEHICLE IDENTIFICATION NUMBER. . . . . A-9,11,13&15

HOW TO USE THIS CATALOG AND LOCATE PARTS

This Catalog is divided into Part Groups in which illustrations for parts of a similar function and/or location are published. The Group Contents listing on the next page shows the type of parts contained in each group. Tabs are provided or available to separate each group.

Several methods may be used to locate a specific part:

Option 1: From the Group Contents listing, select the group which would most logically contain the part to be found. Open the catalog to the beginning of that group. The first page of the group will contain an index of illustrations. Select the illustration most likely to contain the part. Turn to the selected illustration and locate the part by reviewing the illustration item numbers and associated text information following the illustration.

Option 2: If the "noun" name of the part you seek is known, an alphabetical index of Nouns and Illustration titles is provided to assist in finding the part. Several keys may be found in this index.

RESERVOIR, Power Strng. Oil Pump. .	Group 19	Group Reference
ALTERNATOR, Cherokee	8-1600	Illustration Reference
BELT, Front Seat Cherokee	ITB-1000/3	Illustration/Item Reference

Group _____
Illustration No. _____
Item _____

Option 3: If the part number is known but the applications need to be determined, refer to the numerical index. This index shows the group, illustration number and item for each part listed in the catalog. Multiple references mean the part is listed more than once.

PART GROUP—TITLES & CONTENT

GROUP	CONTENTS
INF	**Information Section**
AL	**Alphabetical Index**
NE	**Newpart Index**
IL	**Illustration Index (All Groups)**
1	**Catalog Notices**
2	**Front Suspension & Drive** Front Suspension Components . . . Steering Knuckles Front Drive Shafts, Axles, Locking Hubs . . . Front Differential
3	**Rear Axle** Rear Axle and Component Parts . . . Rear Axle Mountings
4	**Parking Brake Controls**
5	**Service Brakes** Brake Controls and Mechanism . . . Brake Warning Switch, Parking Brake Components within the Wheel . . . Wheel Hardware, Bearings and Seals
6	**Clutch** Clutch Unit and Components . . . Clutch Pedal, Controls
7	**Cooling** Front Grille, Grille Support, Radiator Supports, Headlamp Supports . . . Radiators, Fans and Fan Motors, Hoses, Thermostats . . . Transmission Cooling . . . Water Pump . . . Drive Belts and Pulleys . . . Turbocharger Cooling
8	**Electrical** Switches, Relays, Solenoids, Sensors, . . . Battery Trays . . . Engine Electrical . . . Starters, Alternators, Distributors . . . Front, Rear, Interior Lamp . . . Body Wiring . . . Horn
8A	**Instrument Panel and Console** Instrument Panel and Console Electrical Parts, Clusters, Switches, Wiring . . . All Hard and Soft Trim Parts . . . Radio, Speakers and Antenna
9 (A, B . . .)	**Engine (By Engine Type)** Engine Components . . . Engine Oil System . . . Flywheels, Torque Converters . . . Engine Mounting
11	**Exhaust** Exhaust System Components . . . Heat Shields
13	**Frame, Bumper & Fascia** Frame Components, Crossmembers . . . Bumper and Fascia Components . . . Snow Plow Parts
14	**Fuel** Accelerator Pedal, Linkage, Throttle Control . . . Air Cleaner . . . Carburetors, Throttle Body and Injection Components . . . Fuel Lines, Fuel Tank . . . Fuel Pump . . . Turbocharger Components . . . Speed Control

GROUP	CONTENTS
16	**Prop. Shaft and Universal Joint**
17	**Rear Suspension** Rear Suspension Components
18	**Service Bulletin Parts**
19	**Steering** Steering Wheels, Column . . . Power Steering Pump . . . Steering Gear . . . Steering Linkage, Tie Rods
21M	**Manual Transmission and Transfer Cases** Manual Transmission, Transaxle and Components . . . Gearshift Controls . . . Transfer Case, Controls, Mountings . . . Speedometer Pinion and Cable
21A	**Automatic Transmission** Automatic Transmission, Transaxle and Components . . . Gearshift Controls . . . Speedometer Pinion and Cable
22	**Wheels** Wheel Rims . . . Wheel Covers, Hubcaps . . . Jack and Spare Tire Storage
23	**Exterior Ornamentation** Exterior Ornamentation, Tape Stripes, Decals . . . Exterior Moldings . . . Vinyl Roof and Trim
23A	**Body-Sheet Metal Except Doors** Body Metal . . . Stationary Glass . . . Sunroof . . . Convertible Top . . . Hood and Deck Release
23C	**Body-Doors and Related Parts** Door Metal . . . Door Hardware . . . Door Glass . . . and Regulator . . . Door Mirrors . . . Weatherstrips
23D	**Body-Miscellaneous** Lock Cylinders and Keys . . . Windshield Washer/Wiper System
IT (A, B . . .)	**Interior Trim (By Body Code)** All Interior Trim Except Dash and Console . . . Seats and Seat Belts . . . Seat Adjusters, Manual and Power . . . Carpet . . . Interior Panels and Moldings . . . Security/Tonneau Covers
24	**Heater and Air** Heater, Air Conditioning System and Controls
25	**Emission Systems** Air Pump . . . EGR System . . . Vapor Canister
NU	**Numerical Index**

PAGE NUMBERING

Two-part page numbers are used throughout this catalog. The first part of the page designation indicates one major group or section. The second part indicates the actual page number in the group. For example:

2-1 indicates Group 2, Front Suspension, Page 1
3-4 indicates Group 3, Axle Rear, Page 4

In the maintenance of the Loose Leaf Parts Catalog Revision Service, it may become necessary to add information beyond the capacity of the page. In this event, an "A" page will be used. For example, if it becomes necessary, because of change, to add several part numbers to page 2-1 and space does not permit the addition, you will be given Page 2-1A. Page 2-1A should be filed immediately following Page 2-1.

Figure and Item Numbers are also commonly used to identify locations in this Catalog, i.e., 14-900/8 refers to Group 14, illustration 900, Item Number 8. Illustration Numbers are always ascending sequential within the Groups.

RIGHT AND LEFT PART NUMBERS

Right and Left part numbers are frequently combined on one line, e.g., 3514 444-5. Such numbers are interpreted as 3514 444 Right Side application and 3514 445 Left Side. Right and Left Sides are always determined by their relationship to the driver when normally seated and looking forward.

SYMBOLS USED IN THIS PARTS CATALOG

The following symbols are commonly used with Part Number and quantity information in this Catalog:

— Preceding a part number indicates parts which have been added and not previously published.

AR — Indicates the quantity required may vary or is to be determined by the user.

PAR — (Indicates Paint As Required).

SPECIFYING INFORMATION

The following information is included in this Parts Catalog:

1. Part Name
2. Part Number
3. Model Application
4. Quantity used per vehicle
5. Description and dimensions necessary for proper identification of parts where necessary
6. Model or Engine Column:
   Engine by Displacement or Vehicle Model Code Body Style Code or Price Class.
7. Effective points of model year running changes are indicated by vehicle serial number, engine number or body number where applicable. When serial number effective points are not available, production effective dates are used. (Refer to the Federal Certification Label for the build date.)
8. Parts designated as CANADA or EXPORT are not available through U.S. parts outlets.

In the event replacement parts not listed herein are required due to a special service situation, Dealers should contact their factory specifier for assistance. Problems encountered with peculiar part specifications can be resolved in the same manner.

ILLUSTRATION INDEX

This index is a compilation of catalog parts description data with reference to illustrations, figures and key numbers as shown:

ILLUSTRATION INDEX	GROUP	ILLUS. NO.
FENDER D. W.		23A-1400

The first page of each group contains a listing of all illustrations within that group. Also refer to illustrations alphabetically listed in information section.

ALPHABETICAL INDEX

This index is a compilation of catalog parts description data with a reference to the location of the item by group—Figure and key number as shown in the following example:

Housing, w/Pump	**7 - 1500 / 18**
Group	
Illustration No.	
Item	

The index will be expanded progressively as data is added to computer files. To locate a part by name, refer to the Alphabetical Index. This indicates the group and illustration and item number where the part is located. Alphabetical Index can be found in INF section of catalog.

NUMERICAL INDEX

A listing of Part Numbers contained in the catalog. The numbers are in numerical sequence with reference to the group and illustration and item number where the part is located.

PARTS PACKAGES

Service Parts Packages, containing all parts needed for specific service operation, are listed in their respective groups with related parts. The listing will show adaptability and model application.

STANDARD PARTS

Important attaching standard parts such as bolts, nuts, etc., are generally listed in the text of the respective major parts groups.

CATALOG AND PARTS BULLETINS

BULLETINS are issued when important changes are made in production or when corrections are to be made in the Parts Catalog between regular revisions. All catalogs should be noted and changed accordingly to remain current between revisions.

PARTS CATALOG REVISION SERVICE

Subscribers to the Jeep/Eagle Parts Catalog Revision Service will be periodically provided with revised copy incorporating the lastest information. Revisions may be provided by Group or complete book copy.

NEWPART INDEX

A listing of new part numbers contained in the catalog. The numbers are in group sequence with reference to the illustration and item number where the part is located.

INTERIOR TRIM

Refer to the Group IT, Interior Trim section of the catalog, for information relative to Interior Soft and Hard Trim, Rolled Stock, etc.

TRANSMISSION IDENTIFICATION

The Part Number and/or Model Number of the Transmission.

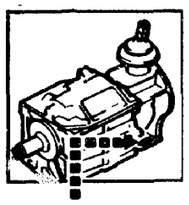

ENGINE IDENTIFICATION

A Sequential Number Assigned by the Engine Assembly Plant.

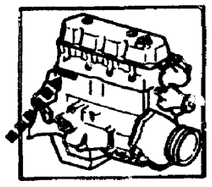

4 Cyl. (AMC)

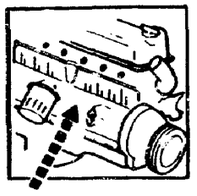

Inline 6 Cyl.

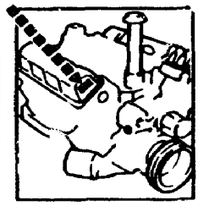

8 Cyl.

4 Cyl. (GM)

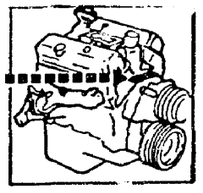

V-6 Cyl.

TRANSFER CASE IDENTIFICATION

The Model Number and Part Number of the Transfer Case Assembly.

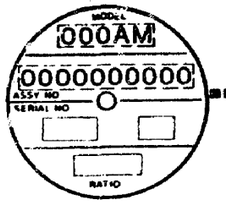

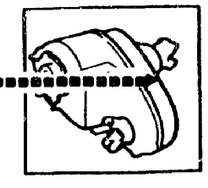

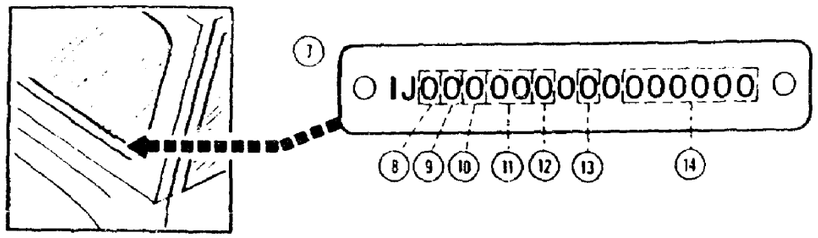

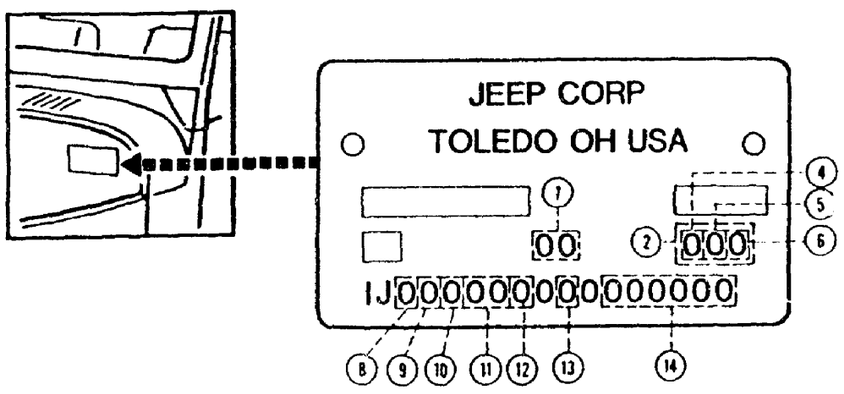

1 **PAINT CODE**

2 **INTERIOR TRIM COLOR/MATERIAL CODES**

4
1 = Black
3 = Blue (1981)
3 = Slate Blue (1982 1983)
4 = Garnet (1983 1986)
5 = Nutmeg (1981 1985)
6 = Beige (1981 1983)
6 = Almond (1984 1986)
9 = Honey

5
B = Bucket Seat, Low Back (1985)
B = Bucket Seat, High Back (1986)
E = Bucket Seat, High Back (1981 1985)
F = 1 3-2 3 Seat

6
A = Vinyl Upholstery - Linen
B = Vinyl Upholstery - Denim
E = Cloth Upholstery - Western Weave
J = Vinyl Upholstery - Care (W. Italian Purse Vertical Straps) (1981-1983)
J = Vinyl Upholstery - Italian Purse (W. Vertical Straps) (1983-1986)
K = Cloth Upholstery - Western Weave (1982)
L = Leather Upholstery
N = Vinyl Upholstery - Cara (W. Italian Purse Vertical Straps) (1982 Jamboree)

7 **VEHICLE IDENTIFICATION (VIN)**

8
C = Multipurpose Vehicle
D = Incomplete Vehicle
E = Export, Left Hand Drive

9
B = 2.5L(151 C.I.D.) 4cyl. Gasoline Eng.(GM)
C = 4.2L(258 C.I.D.) 6cyl. Gasoline Eng.
F = 2.4L(145 C.I.D.) 4cyl. Diesel Eng.(ISUZU)
H = 5.0L(304 C.I.D.) V-8 Eng.
P = 2.1L(128 C.I.D.) 4cyl. Diesel Eng.(RENAULT)
U = 2.46L(150 C.I.D.) 4 cyl. Gasoline Eng.(AMC) (Domestic)
Y = 2.46L(150 C.I.D.) 4cyl. Gasoline Eng.(AMC) (Export)

10
E = Auto. Trans. Part Time Transfer Case
F = 5-Speed Man. Trans. Part Time Transfer Case
L = 5-Speed Man. Trans. Part Time Transfer Case
M = 4-Speed Man. Trans. Part Time Transfer Case
N = 5-Speed Man. Trans. Part Time Transfer Case
X = Part Time Transfer Case

11
85 = CJ-5 2Dr. Open Body, 84" WB
86 = CJ-6 2Dr. Open Body, 104" WB
87 = CJ-7 2Dr. Open Body, 94" WB
88 = CJ-8 (Scrambler)2Dr. Open Body, 104 WB

12
A = 3750 LB. GVW
E = 4150 LB. GVW

13
B = Model Year 1981
C = Model Year 1982
D = Model Year 1983
E = Model Year 1984
F = Model Year 1985
G = Model Year 1986

14 A sequential serial number assigned by the vehicle manufacturer beginning with 000 001 each model year.

15 **ENGINE IDENTIFICATION**

First Position
1 = 1981
2 = 1982, ETC. Thru
6 = 1986

Second Position
01 = January
02 = February, ETC. Thru
12 = December

Third Position
B = 2.5L Four Cyl., 2 BBL. Carb (GM)
C = 4.2L Six Cyl., 2 BBL. Carb.
H = 5.0L V-8, 2 BBL. Carb.
M = 4.2L Six Cyl., 2 BBL. Carb. (V.A.M.)
U = 2.46L Four Cyl., Single BBL. Carb. (AMC) (Domestic)
Y = 2.46L Four Cyl., Single BBL. Carb. (AMC) (Export)

Fourth Position
01 = Day of the Month

To identify odd size engines, the following letter coding will be used. On 4.2L Six, this code is stamped on the oil filter boss next to the block. On 5.0L V-8, this code is stamped on the upper half of the Engine Build Code Plate.

B = .010 Oversize Cylinder Bores
C = .010 Oversize Camshaft Bores
M = .010 Undersize Main Bearings
P = .010 Undersize Pins
PM = .010 Undersize Pins and Main Bearings

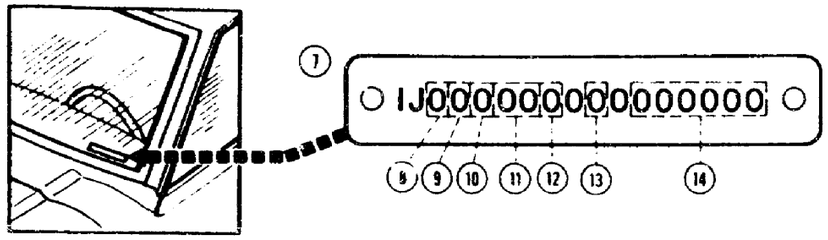

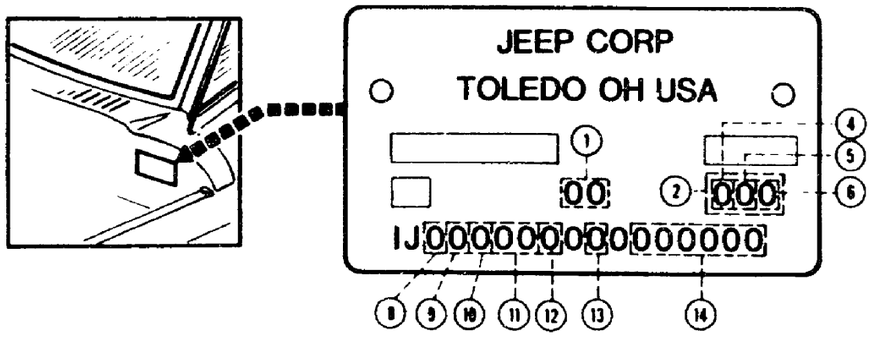

1981-86 SJ

1 **PAINT CODE**

2 **INTERIOR TRIM COLOR/MATERIAL CODES**

4
1 = Black
3 = Blue (1981)
3 = Slate Blue (1982 1983)
4 = Garnet (1983 1986)
5 = Nutmeg (1981 1985)
6 = Beige (1981 1983)
6 = Almond (1984 1986)
9 = Honey

5
A = Bench Seat
B = Bucket Seat, Fixed (4-Door)
C = Bucket Seat, Fixed Left Side, Folding Right
D = Bucket Seat, Folding
E = Bucket Seat, High Back

6
D = Vinyl Upholstery - Italian Purse (Except 15)
E = Cloth Upholstery - Western Weave (Except Laredo)
F = Cloth Upholstery - Coventry
G = Vinyl Upholstery - Sun Valley
H = Vinyl Upholstery - Deluxe Grain
J = Vinyl Upholstery - Cara (W Italian Purse (W Vertical Straps) (1981 1983)
J = Vinyl Upholstery - Italian Purse W Veritical Straps)(1983 1986)
K = Cloth Upholstery - Western Weave (Laredo Only)
L = Leather Upholstery
LP = Leather Upholstery (1985 Wagoneer Type 2 Only)
M = Vinyl Upholstery - Italian Purse (15 Only)
N = Vinyl Upholstery - Celtic Grain
Q = Cloth Upholstery - Highland Check (Laredo)
T = Vinyl Upholstery - Tooled Grain
W = Cloth Upholstery - Highland Check (Wagoneer, Type 1)
W = Cloth Upholstery -Westchester (Wagoneer, Type 2)

7 **VEHICLE IDENTIFICATION (VIN)**

8
C = Multipurpose Vehicle
D = Incomplete Vehicle
E = Export, Left Hand Drive
F = Export, Right Hand Drive
T = Truck

9
C = 4.2L(258 C.I.D.) Six Cyl. Eng.
N = 5.9L(360 C.I.D.) V-8 Engine

10
A = Auto. Trans. Col. Shift, Full Time Trans. Case
E = Auto. Trans. Col. Shift, Part Time Transfer Case
G = 4-Speed Man. Trans. Full Time Transfer Case
H = 4-Speed Man. Trans. Full or Part Time Transfer Case
J = Auto. Trans. Col. Shift, Full or Part Time Transfer Case
M = 4-Speed Manual Trans., Part Time Transfer Case

11
15 = Wagoneer 4Dr. Wagon
16 = Cherokee 2Dr. Wagon
17 = Cherokee 2Dr. Wagon (Wide Wheel)
18 = Cherokee 4Dr. Wagon
25 = J-10 Pick-up Truck - 119" WB
26 = J-10 Pick-up Truck - 131" WB
27 = J-20 Pick-up Truck - 131" WB

12
A = Cherokee Chief(17)(6200 LB. GVW)
D = Cherokee Laredo(17)(6200 LB. GVW)
N = Cherokee(16)(17)(18)(6200 LB. GVW)
N = Wagoneer(15)(6200 LB. GVW)
N = J-10 Truck (6200 LB. GVW)
P = J-20 Truck (6800 LB. GVW)
S = J-20 Truck (7600 LB. GVW)
U = Wagoneer (6800 LB. GVW)
U = J-10 Truck (6800 LB. GVW)
Y = J-20 Truck (8400 LB. GVW)

13
B = Model Year 1981
C = Model Year 1982
D = Model Year 1983
E = Model Year 1984
F = Model Year 1985
G = Model Year 1986

14 A sequential serial number assigned by the vehicle manufacturer beginning with 000 001 each model year.

15 **ENGINE IDENTIFICATION**

First Position
1 = 1981
2 = 1982, ETC. Thru
6 = 1986

Second Position
01 = January
02 = February, ETC. Thru
12 = December

Third Position
C = 4.2L Six Cyl., 2 BBL. Carb.
M = 4.2L Six Cyl., 2 BBL. Carb. (V.A.M.)
N = 5.9L V-8 2 BBL. Carb.

Fourth Position
01 = Day of the Month

To identify odd size engines, the following letter coding will be used. On 4.2L Six, this code is stamped on the oil filter boss next to the block. On 5.9L V-8, this code is stamped on the upper half of the Engine Build Code Plate.

B = .010 Oversize Cylinder Bores
C = .010 Oversize Camshaft Bores
M = .010 Undersize Main Bearings
P = .010 Undersize Pins
PM = .010 Undersize Pins and Main Bearings

16 **TRANSMISSION IDENTIFICATION**
The part number and or Model number of the transmission.

17 thru 18 **TRANSFER CASE IDENTIFICATION**

17 A model number assigned by the transfer case assembly plant. 01-12-93

18 The part number of the transfer case assembly.

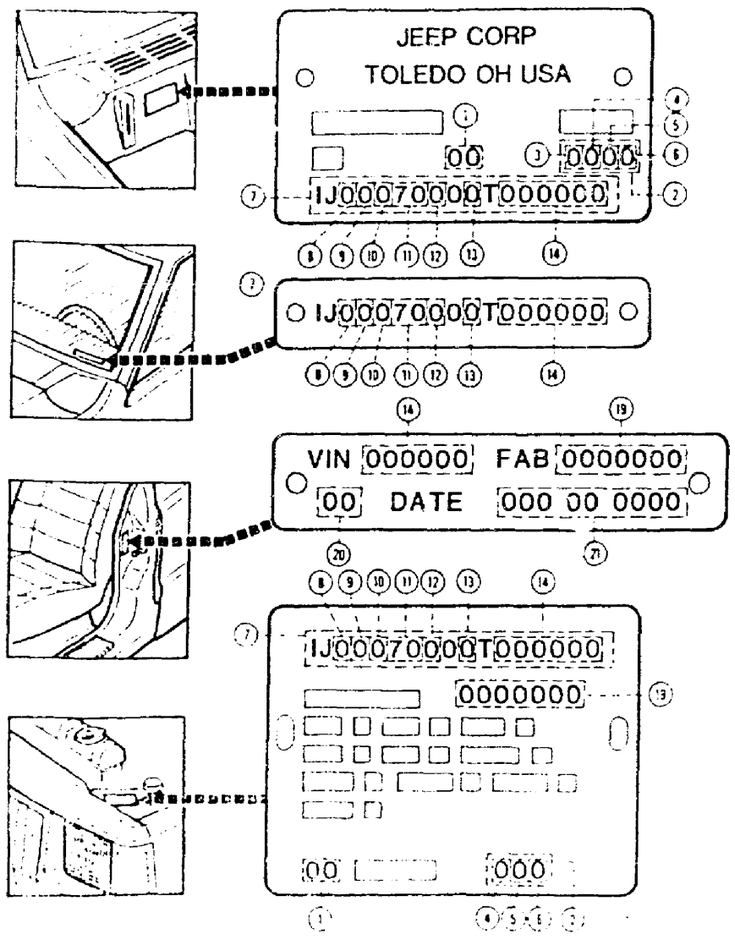

1984-85 XJ

1 PAINT CODE

2D = Deep Night Blue
3A = Almond Beige
3B = Sebring Red
3C = Garnet Metallic Clearcoat
3K = Cinnamon Metallic Clearcoat
4C = Ice Blue Metallic Clearcoat
4D = Champagne Metallic Clearcoat
4E = Chestnut Brown Metallic Clearcoat
4H = Nordic Green
4K = Silver Metallic Clearcoat
4M = Charcoal Gray Metallic Clearcoat
5B = Medium Green Metallic Clearcoat
5D = Dark Honey Metallic Clearcoat
5E = Dark Brown Metallic Clearcoat
9B = Olympic White
PI = Classic Black
999 = Special Paint Option

2 3 INTERIOR TRIM COLOR/MATERIAL CODES

3 = Slate Blue(Mod 1984, 1985 Type 1)
3 = Med. Blue(Mod 1985 Type 2)
4 = Garnet
5 = Nutmeg
6 = Almond
9 = Honey

4

P = Bucket Seat - Non Reclining
Q = Bucket Seat - Reclining

5

E = Vinyl and Sheepskin Upholstery - Cherokee 2-Dr Wagon
G = Cloth Upholstery - Wagoneer Base Model
L = Leather Upholstery - Limited Model
U = Cloth Upholstery - Pioneer or Chief Model
V = Vinyl Upholstery - Pioneer or Chief Model
W = Cloth Upholstery - Laredo Model or Pioneer Model with 4x4 of the Year Package
X = Vinyl Upholstery - Cherokee Base Model

6

P = Type 2 1985 Vehicle(With 1986 Trim)

7 8 VEHICLE IDENTIFICATION (VIN)

C = Multipurpose Vehicle
D = Incomplete Vehicle
E = Export, Left Hand Drive
F = Export, Right Hand Drive

9

B = 2.1L Four Cyl. Turbo Diesel Eng.
U = 2.46L Four Cyl. Gasoline Eng. (Domestic)
W = 2.8L V6 Engine
Y = 2.46L Four Cyl. Gasoline Eng. (Export)

10

B = Auto. Trans. Part Time Trans. Case (4WD)
C = Auto. Trans. Full Time Trans. Case (4WD)
D = Auto. Trans. Less Trans. Case (2WD)
H = 4-Speed Man. Trans. Full Time Trans. Case (4WD)
L = 5-Speed Man. Trans. Part Time Trans. Case (4WD)
N = 5-Speed Man. Trans. Full Time Trans. Case (4WD)
S = 4-Speed Man. Trans. Less Trans. Case (2WD)
W = 5-Speed Man. Trans. Less Trans. Case (2WD)
X = 4 Speed Man. Trans. Part Time Trans. Case (4WD)

11

73 = Cherokee 2Dr. Wagon (2WD)
74 = Cherokee 4Dr. Wagon (2WD)
75 = Wagoneer 4Dr. Wagon (4WD)
77 = Cherokee 2Dr. Wagon (4WD)
78 = Cherokee 4Dr. Wagon (4WD)

12

1 = Cherokee Base Model
2 = Cherokee Pioneer Model
3 = Cherokee Chief Model
4 = Cherokee Laredo Model
5 = Wagoneer Base Model
6 = Wagoneer Limited Model

13

E = Model Year 1984
F = Model Year 1985

14

A sequential serial number assigned by the vehicle manufacturer beginning with 000 001 each model year.

15 ENGINE IDENTIFICATION

A sequential serial number assigned by the engine assembly plant.

16 TRANSMISSION IDENTIFICATION

The part number and or Model number of the transmission.

17 thru 18 TRANSFER CASE IDENTIFICATION

17

A model number assigned by the transfer case assembly plant

18

The part number of the transfer case assembly

19 BODY FABRICATION NUMBER

A Sequential number assigned by the body framing plant, never returning to zero for the life of the body series, beginning with 0,000,001.

20 thru 21 MANUFACTURING DATE

20

84 = Model Year 1984
85 = Model Year 1985

21

Month, day and year the vehicle was built.

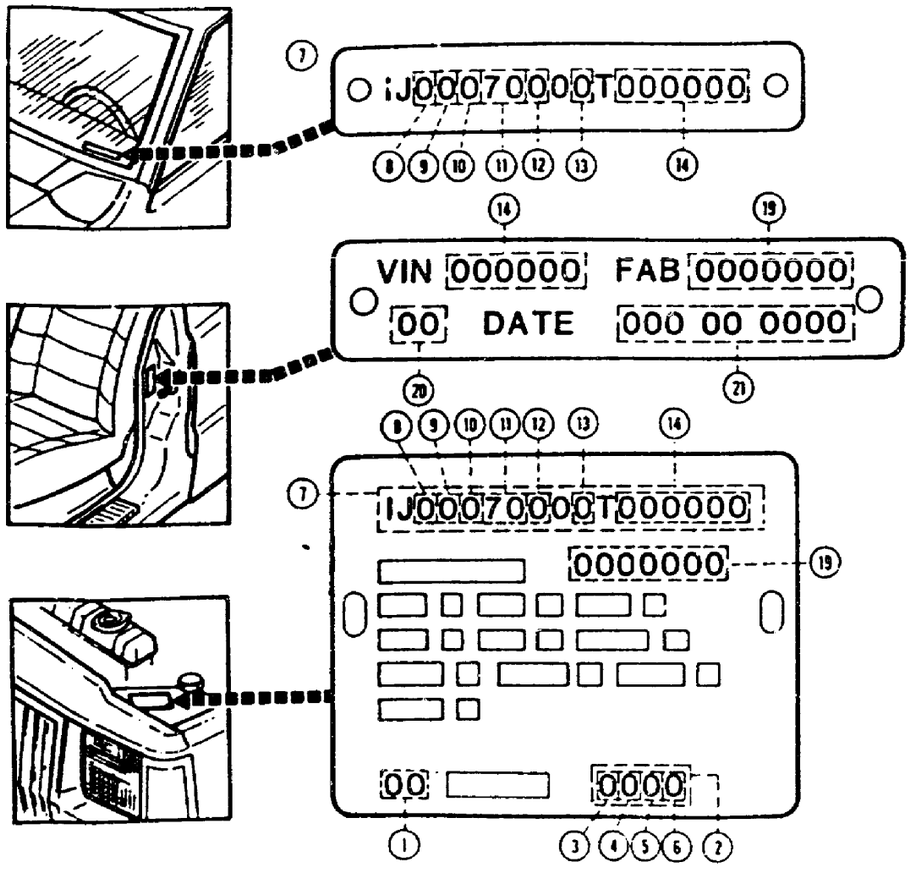

1 PAINT CODE

2D = Deep Night Blue Clearcoat
3B = Sebring Red Clearcoat
3C = Garnet Metallic Clearcoat
3D = Sterling Metallic Clearcoat
4D = Champagne Metallic Clearcoat
4M = Charcoal Grey Metallic Clearcoat
5D = Dark Honey Metallic Clearcoat
5E = Dark Brown Metallic Clearcoat
9B = Olympic White Clearcoat
AA = Dark Pewter Metallic Clearcoat
AB = Beige Clearcoat
AJ = Medium Blue Metallic Clearcoat
BC = Briarwood Metallic Clearcoat
BD = Grenadine Metallic Clearcoat
BE = Colorado Red Clearcoat
FG = Forest Green Clearcoat
FO = Utility Orange Clearcoat
FY = D.O.T. Yellow Clearcoat
PI = Classic Black Clearcoat
999 = Special Paint Option

2 INTERIOR TRIM COLOR/MATERIAL CODES

4
1 = Black
3 = Med. Blue
4 = Garnet
6 = Tan
9 = Honey

5
A = Bench Seat - No Notch For Shift Lever (Truck)
N = Bucket Seat - Reclining (Truck)
P = Bucket Seat - Non Reclining (Wagon)
Q = Bucket Seat - Reclining (Wagon)
Y = Bench Seat - Notched For Shift Lever (Truck)

6
G = Cloth Upholstery - Luggage
L = Leather Upholstery
T = Vinyl Upholstery - Tooled Grain
U = Cloth Upholstery - Mesa
G = Vinyl Upholstery - Delux Grain
W = Cloth Upholstery - Highland Check
X = Vinyl Upholstery - A46

7 VEHICLE IDENTIFICATION (VIN)

8
C = Multipurpose Vehicle
D = Incomplete Vehicle
E = Export, Left Hand Drive
F = Export, Right Hand Drive
T = Truck

9
B = 2.1L Four Cyl. Turbo Diesel Eng.
H = 2.46L Four Cyl. Gasoline Eng. (Domestic)
W = 2.8L V6 Engine
Y = 2.46L Four Cyl. Gasoline Eng. (Export)

10
A = 3-Speed Auto. Trans. Column Shift (2WD)
B = 3-Speed Auto. Trans. Floor Shift Part Time Trans. Case
C = 3-Speed Auto. Trans. Floor Shift Full Time Trans. Case
D = 3-Speed Auto. Trans. Floor Shift (2WD)
E = 3-Speed Auto. Trans. Column Shift Part Time Trans. Case
H = 4-Speed Man. Trans. Full Time Trans. Case
J = 3-Speed Auto. Trans. Column Shift Full Time Trans. Case
[illegible] = 5-Speed Man. Trans. PT Trans. Case
[illegible] = 5-Speed Man. Trans. Full Time Trans. Case
S = 4-Speed Man. Trans. (2WD)
W = 5-Speed Man. Trans. (2WD)
X = 4-Speed Man. Trans. Part Time Trans. Case

11
63 = Comanche Truck - (4WD) - 6 FT. B
64 = Comanche Truck - (2WD) - 6 FT. Box
65 = Comanche Truck - (4WD) - 7 FT. Box
66 = Comanche Truck - (2WD) - 7 FT. Box
73 = Cherokee 2Dr. Wagon (2WD)
74 = Cherokee 4Dr. Wagon (2WD)
75 = Wagoneer 4Dr. Wagon (4WD)
77 = Cherokee 2Dr. Wagon (4WD)
78 = Cherokee 4Dr. Wagon (4WD)

12
1 = Cherokee Base Model(4001-5000 GVW)
1 = 1986 Comanche Custom Model(STD Payload)
2 = Cherokee Pioneer Model(4001-5000 GVW)
3 = Cherokee Chief Model(4001-5000 GVW)
4 = Cherokee Laredo Model(4001-5000 GVW)
5 = Wagoneer Base Model
6 = Wagoneer Limited Model
7 = Comanche X Model(STD Payload)
8 = Comanche Sport or XL Model(STD Payload)
9 = Comanche XLS Model(STD Payload)
F = Comanche Custom Model(Metric Ton)
G = Comanche X Model(Metric Ton)
H = Comanche Sport or XL Model(Metric Ton)
J = Comanche XLS Model(Metric Ton)
K = Cherokee Base Model(3001-4000 GVW)
L = Cherokee Pioneer Model(3001-4000 GVW)
M = Cherokee Laredo Model(3001-4000 GVW)

13 G = Model Year 1986

14 A sequential serial number assigned by the vehicle manufacturer beginning with 000 001 each model year.

15 ENGINE IDENTIFICATION
A sequential serial number assigned by the engine assembly plant.

16 TRANSMISSION IDENTIFICATION
The part number and/or Model number of the transmission

17 thru 18 TRANSFER CASE IDENTIFICATION

17 A model number assigned by the Transfer Case assembly plant.

18 The part number of the transfer case assembly.

19 BODY FABRICATION NUMBER
A sequential number assigned by the body framing plant, never returning to zero for the life of the body series, beginning with 0.000.001.

20 thru 21 MANUFACTURING DATE

20 86 = Model Year 1986

21 Month, day and year the vehicle was built.

DATE CODE CORRELATION TABLE

1989 DAY NUMBER

DATE	JAN.	FEB.	MAR.	APR.	MAY	JUNE	JULY	AUG.	SEPT.	OCT.	NOV.	DEC.
1	10019	10050	10078	10109	10139	10170	10200	10231	10262	10292	10322	10352
2	10020	10051	10079	10110	10140	10171	10201	10232	10263	10293	10323	10353
3	10021	10052	10080	10111	10141	10172	10202	10233	10264	10294	10324	10354
4	10022	10053	10081	10112	10142	10173	10203	10234	10265	10295	10325	10355
5	10023	10054	10082	10113	10143	10174	10204	10235	10266	10296	10326	10356
6	10024	10055	10083	10114	10144	10175	10205	10236	10267	10297	10327	10357
7	10025	10056	10084	10115	10145	10176	10206	10237	10268	10298	10328	10358
8	10026	10057	10085	10116	10146	10177	10207	10238	10269	10299	10329	10359
9	10027	10058	10086	10117	10147	10178	10208	10239	10270	10300	10330	10360
10	10028	10059	10087	10118	10148	10179	10209	10240	10271	10301	10331	10361
11	10029	10060	10088	10119	10149	10180	10210	10241	10272	10302	10332	10362
12	10030	10061	10089	10120	10150	10181	10211	10242	10273	10303	10333	10363
13	10031	10062	10090	10121	10151	10182	10212	10243	10274	10304	10334	10364
14	10032	10063	10091	10122	10152	10183	10213	10244	10275	10305	10335	10365
15	10033	10064	10092	10123	10153	10184	10214	10245	10276	10306	10336	10366
16	10034	10065	10093	10124	10154	10185	10215	10246	10277	10307	10337	10367
17	10035	10066	10094	10125	10155	10186	10216	10247	10278	10308	10338	10368
18	10036	10067	10095	10126	10156	10187	10217	10248	10279	10309	10339	10369
19	10037	10068	10096	10127	10157	10188	10218	10249	10280	10310	10340	10370
20	10038	10069	10097	10128	10158	10189	10219	10250	10281	10311	10341	10371
21	10039	10070	10098	10129	10159	10190	10220	10251	10282	10312	10342	10372
22	10040	10071	10099	10130	10160	10191	10221	10252	10283	10313	10343	10373
23	10041	10072	10100	10131	10161	10192	10222	10253	10284	10314	10344	10374
24	10042	10073	10101	10132	10162	10193	10223	10254	10285	10315	10345	10375
25	10043	10074	10102	10133	10163	10194	10224	10255	10286	10316	10346	10376
26	10044	10075	10103	10134	10164	10195	10225	10256	10287	10317	10347	10377
27	10045	10076	10104	10135	10165	10196	10226	10257	10288	10318	10348	10378
28	10046	10077	10105	10136	10166	10197	10227	10258	10289	10319	10349	10379
29	10047		10106	10137	10167	10198	10228	10259	10290	10320	10350	10380
30	10048		10107	10138	10168	10199	10229	10260	10291	10321	10351	10381
31	10049		10108		10169		10230	10261				10382 10383

DATE CODE CORRELATION TABLE

1990 DAY NUMBER

DATE	JAN.	FEB.	MAR.	APR.	MAY	JUNE	JULY	AUG.	SEPT.	OCT.	NOV.	DEC.
1	10384	10415	10443	10474	10504	10535	10565	10596	10627	10657	10688	10718
2	10385	10416	10444	10475	10505	10536	10566	10597	10628	10658	10689	10719
3	10386	10417	10445	10476	10506	10537	10567	10598	10629	10659	10690	10720
4	10387	10418	10446	10477	10507	10538	10568	10599	10630	10660	10691	10721
5	10388	10419	10447	10478	10508	10539	10569	10600	10631	10661	10692	10722
6	10389	10420	10448	10479	10509	10540	10570	10601	10632	10662	10693	10723
7	10390	10421	10449	10480	10510	10541	10571	10602	10633	10663	10694	10724
8	10391	10422	10450	10481	10511	10542	10572	10603	10634	10664	10695	10725
9	10392	10423	10451	10482	10512	10543	10573	10604	10635	10665	10696	10726
10	10393	10424	10452	10483	10513	10544	10574	10605	10636	10666	10697	10727
11	10394	10425	10453	10484	10514	10545	10575	10606	10637	10667	10698	10728
12	10395	10426	10454	10485	10515	10546	10576	10607	10638	10668	10699	10729
13	10396	10427	10455	10486	10516	10547	10577	10608	10639	10669	10700	10730
14	10397	10428	10456	10487	10517	10548	10578	10609	10640	10670	10701	10731
15	10398	10429	10457	10488	10518	10549	10579	10610	10641	10671	10702	10732
16	10399	10430	10458	10489	10519	10550	10580	10611	10642	10672	10703	10733
17	10400	10431	10459	10490	10520	10551	10581	10612	10643	10673	10704	10734
18	10401	10432	10460	10491	10521	10552	10582	10613	10644	10674	10705	10735
19	10402	10433	10461	10492	10522	10553	10583	10614	10645	10675	10706	10736
20	10403	10434	10462	10493	10523	10554	10584	10615	10646	10676	10707	10737
21	10404	10435	10463	10494	10524	10555	10585	10616	10647	10677	10708	10738
22	10405	10436	10464	10495	10525	10556	10586	10617	10648	10678	10709	10739
23	10406	10437	10465	10496	10526	10557	10587	10618	10649	10679	10710	10740
24	10407	10438	10466	10497	10527	10558	10588	10619	10650	10680	10711	10741
25	10408	10439	10467	10498	10528	10559	10589	10620	10651	10681	10712	10742
26	10409	10440	10468	10499	10529	10560	10590	10621	10652	10682	10713	10743
27	10410	10441	10469	10500	10530	10561	10591	10622	10653	10683	10714	10744
28	10411	10442	10470	10501	10531	10562	10592	10623	10654	10684	10715	10745
29	10412		10471	10502	10532	10563	10593	10624	10655	10685	10716	10746
30	10413		10472	10503	10533	10564	10594	10625	10656	10686	10717	10747
31	10414		10473		10534		10595	10626		10687		10748

METRIC CONVERSION TABLE

LINEAR MEASUREMENT

1 foot (ft.)	12 inches (in.)		1 centimeter (cm)	10 millimeters (mm)
1 yard (yd.)	3 ft. 36 in.		1 meter (m)	100 cm 1000 mm
1 mile (statute)	5,280 ft.		1 kilometer (km)	1000 meters

To convert	Into	Multiply by	To convert	Into	Multiply by
inches	centimeters	2.5400	centimeters	inches	0.3937
inches	millimeters	25.4000	millimeters	inches	0.0394
feet	meters	0.3048	meters	feet	3.2808
feet	millimeters	304.8000	millimeters	feet	0.0033
yards	meters	0.9144	meters	yards	1.0936
miles	kilometers	1.6093	kilometers	miles	0.6214

AREA MEASUREMENT

1 square foot (sq.ft.)	144 square inches (sq.in.)		1 sq. centimeter (cm^2)	100 sq. millimeters (mm^2)
1 square yard (sq.yd.)	9 square feet		1 sq. meter (m^2)	10,000 cm^2
1 acre	4,840 sq. ft.		1 are (a)	100 m^2
1 square mile	640 acres		1 sq. kilometer (km^2)	1,000,000 m^2

To convert	Into	Multiply by	To convert	Into	Multiply by
square inches	sq. centimeters	6.4516	sq. centimeters	sq. inches	0.1550
square feet	sq. meters	0.0929	sq. meters	sq. feet	10.7639
square yards	sq. meters	0.8361	sq. meters	sq. yards	1.1960
acres	sq. meters	4,047.0	sq. meters	acres	0.0002
square miles	sq. kilometers	2.5900	sq. kilometers	sq. miles	0.3861

CUBIC MEASUREMENT (VOLUME)

1 cubic foot (cu. ft.)	1,728 cubic inches (cu. in.)	1 cu. centimeter (cm^3)	1000 cu. millimeters (mm^3)
1 cubic yard (cu. yd.)	27 cubic feet	1 cubic meter (m^3)	1,000,000 cm^3

To convert	Into	Multiply by	To convert	Into	Multiply by
cubic inches	cu. centimeters	16.3872	cu. centimeters	cubic inches	0.0610
cubic feet	cubic meters	0.0283	cubic meters	cubic feet	35.3145
cubic yards	cubic meters	0.7646	cubic meters	cubic yards	1.3079

LIQUID MEASUREMENT (CAPACITY)

1 pint (pt.)	28.875 cubic inches	1 centimeter (cl.)	10 milliliters (ml.)
1 quart (qt.)	2 pints 57.75 cu. in.	1 liter (l)	100 cl 1000 ml
1 gallon (gal.)	4 qts. 231 cu. in.	1 kiloliter (kl)	1000 liters

To convert	Into	Multiply by	To convert	Into	Multiply by
cubic inches	liters	0.0164	liters	cubic inches	61.0250
pints	liters	2.1132	liters	pints	0.4732
quarts	liters	0.9463	liters	quarts	1.0566
gallons	liters	3.7853	liters	gallons	0.2642
cubic feet	liters	28.3162	liters	cubic feet	0.0353

WEIGHT MEASUREMENT

1 ounce (oz.)	16 drams	1 centigram (cg.)	10 milligrams (mg.)
1 pound (lb.)	16 ounces	1 gram (g.)	100 cg 1000 mg
1 short ton	2000 pounds	1 kilogram (kg.)	1000 grams
1 long ton	2240 pounds	1 metric ton (t.)	1000 kg

To convert	Into	Multiply by	To convert	Into	Multiply by
drams	grams	1.7718	grams	drams	0.5644
ounces	drams	28.3495	grams	ounces	0.0353
pounds	kilograms	0.4536	kilograms	pounds	2.2046
tons (short)	tons (metric)	0.9072	tons (metric)	tons (short)	1.1023

POWER MEASUREMENT

1 horsepower (hp)	746 watts	7457 kilowatts (kw)	1 horsepower (ps)	736 watts	7355 kw

To convert	Into	Multiply by	To convert	Into	Multiply by
horsepower (U.S.)	horsepower (met.)	1.0139	horsepower (met.)	horsepower (U.S.)	0.9863
horsepower (U.S.)	kilowatts	0.7457	kilowatts	horsepower (met.)	0.7355
kilowatts	horsepower (U.S.)	1.3405	horsepower (met.)	kilowatts	1.2596

ABBREVIATIONS

Abbreviations as used throughout this catalog are interpreted as follows

AAV	AMERICAN ARAB VEHICLE
ABS	ABSORBER
ACC	ACCESSORY
ACCEL	ACCELERATOR
A/CLNR	AIR CLEANER
A/COND	AIR CONDITIONING
ACTG	ACTUATING
ACTR	ACTUATOR
ADAPT	ADAPTER-ADAPTATION
ADJ	ADJUSTING-ADJUSTOR-ADJUSTABLE-ADJUSTMEN
ADR	AUSTRALIAN DESIGN RULE
A/INL	AIR INLET
ALT	U.S.A. HIGH ALTITUDE AREAS
ALTR	ALTERNATOR
ALUM	ALUMINUM
AMP	AMPERE
AMPL	AMPLIFIER
AMTR	AMMETER
ANCH	ANCHOR
&	AND
A/OUT	AIR OUTLET
APPROX	APPROXIMATE, APPROXIMATELY
AR	AS REQUIRED
A/RATLR	ANTI RATTLER
A REST	ARM REST
ARM	ARMATURE
A/SQK	ANTISQUEAK
ASSY	ASSEMBLY
A/SUSP	AIR SUSPENSION
A.T.C.	AUTOMATIC TEMPERATURE CONTROL
ATT	ATTACHING
A/TRANS	AUTOMATIC TRANSMISSION
AUTO	AUTOMATIC
AUX	AUXILIARY
B	BELGIUM
BAL	BALANCE
BATT	BATTERY
BBL	BARREL
B/BRK	BOOSTER BRAKE
B/CRK	BELL CRANK
B.E.	BLACK ENAMEL
B/JNT	BALL JOINT
BLK	BLOCK
BLT	BUILT
BLWR	BLOWER
BMPR	BUMPER
BOLT / RET	BOLT / RETAINER
BOLT / WA.	BOLT / WASHER
BR	BRASS
BRD	BOARD
BRG	BEARING
BRK	BRAKE
BRKT	BRACKET
BRKR	BREAKER
BRT	BRIGHT
BRZ	BRONZE
BSTR	BOOSTER
B/STUD	BALL STUD
BTM	BOTTOM
BTN	BUTTON
B/UP	BACK UP
BUSH	BUSHING
CAD	CADIUM
CAN	CANADA-CANADIAN
CAP	CAPACITY
C.A.S.	CLEANER AIR SYSTEM
CARB	CARBURETOR
CATA	CATALYTIC
C/BAR	CROSS BAR
CBL	CABLE
C/BRD	CIRCUIT BOARD
C.BRKR	CIRCUIT BREAKER
CCW	COUNTERCLOCKWISE
CDN	CANADA
C/E	COMMUTATOR END
CH	SWITZERLAND
CHAM	CHAMFRED
CHMBR	CHAMBER
CHR	CHROMIUM
C.I.	CUBIC INCH
C/IRON	CAST IRON
C/CASE	CRANKCASE
CK/CHFT	CRANKSHAFT
CKD	COMPLETE KNOCK-DOWN (KDX)
CL	CLEANER
CL/NUT	CLINCH NUT
C/LP	COURTESY LAMP
CLSR	CLOSURE
C/LTR	CIGAR OR CIGARETTE LIGHTER
C/MBR	CROSSMEMBER
COE	CAB OVER ENGINE
COL	COLUMN
COMB	COMBINATION
COMBN	COMBUSTION
COMP	COMPLETE, COMPONMENT
COMPN	COMPRESSION
COMPR	COMPRESSOR
COMPT	COMPARTMENT
COMTR	COMMUTATOR
COND	CONDENSER
CONDT	CONDUIT
CONDTG	CONDITIONING
CONN	CONNECTING-CONNECTION-CONNECTOR
CONT	CONTINUED-CONTROL
CONT'D	CONTINUED
CONV	CONVERTER
COP	COPPER
CO/SHFT	COUNTERSHAFT
CO/WT	COUNTERWEIGHT
CP	CANDLEPOWER
C/PILLAR	CENTER PILLAR
CPLG	COUPLING
C/SHFT	CROSS SHAFT
CSTG	CASTING
CTR	CENTER
CU	CUBIC
CUSH	CUSHION
CUST	CUSTOM
CV	CONVERTIBLE
C/VAL	CONTROL VALVE
CVR	COVER
C/WT	COUNTERWEIGHT
CYL	CYLINDER
DBL	DOUBLE
D/CVR	DUST COVER
D/E	DRIVE END
DECAL	DECALCOMANIA
DEFL	DEFLECTOR
DEFGR	DEFOGGER
DEFR	DEFROSTER
DEG (°)	DEGREE
D/EXH	DUAL EXHAUST

ABBREVIATIONS (Cont'd)

DIA	DIAMETER
DIAG	DIAGONAL
DIAPH	DIAPHRAGM
DIFF	DIFFERENTIAL
DIM	DIMENSION
DIR	DIRECT-DIRECTIONAL
DIR CL	DIRECT CLUTCH
DIST	DISTRIBUTOR-DISTRIBUTING
DIV	DIVISION-DIVISIONAL
D/LINK	DRAG LINK
D/LP	DOME LAMP
DMPR	DAMPER
DOM	DOMESTIC
D/PINION	DRIVE PINION
DR	DOOR
D/R SHAFT	DOUBLE ROCKER SHAFT
DRIV	DRIVE
DRVN	DRIVEN
D/SEAL	DUST SEAL
D/SHLD	DUST SHIELD
D/SW	DIMMER SWITCH
EBL	ELECTRIC HEATED BACK LIGHT
ECE	ECONOMIC COMMISSION OF EUROPE
ECC	ECCENTRIC
ECS	EVAPORATE EMISSION CONTROL SYSTEM
EDR	ENGLAND DESIGN RULE
EEC	EUROPEAN ECONOMIC COMMUNITY
E.F.I. (M)	ELECTRONIC FUEL INJECTION (METERING)
E.G.R.	EXHAUST GAS RECIRCULATION
ELECT	ELECTRIC
ELIM	ELIMINATOR
EMR	ENGINE MAINTENANCE REMINDER
ENG	ENGINE
EQ	EQUIPMENT
ESC	ESCUTCHEON
ET	EGYPT
ETC	ET CETERA
EVAP	EVAPORATON-EVAPORATOR
EX	EXTRA
EXC	EXCLUDE
EXH	EXHAUST
EXP	EXPORT
EXPN	EXPANSION
EXT	EXTENSION
EXTL	EXTERNAL
EXTR	EXTRUDED
F	FRANCE
F	FAHRENHEIT
FACT	FACTORY
F/AIR	FRESH AIR
FAST	FASTENING-FASTENER
F/AXLE	FRONT AXLE
F/BRD	FLOOR BOARD
F/CPLG	FLUID COUPLING
F/DR	FRONT DOOR
F/FILT	FUEL FILTER
F/GA	FUEL GAGE
F/IDLE	FAST IDLE
FIL HD	FILLISTER HEAD
FIN	FINISH
F/INJ	FUEL INJECTION
FLD	FIELD
FLEX	FLEXIBLE
FLG	FLANGE
FL HD	FLAT HEAD
FLR	FLOOR
F/MLDG	FINISH MOULDING
FNDR	FENDER
F/PAN	FLOOR PAN
F/PUMP	FUEL PUMP
FREQ	FREQUENCY
FRT	FRONT
FT	FOOT-FEET
F/TANK	FUEL TANK
FTG	FITTING
F/TOP	FOLDING TOP
GA	GAUGE-GAGE
GALV	GALVANIZED
GARN	GARNISH
GCC	GULF COAST COUNTRIES
G/BOX	GLOVE BOX
GEN	GENERATOR
GLA	GLASS
G/MLDG	GARNISH-MOULDING
GND	GROUND
GOV	GOVERNOR
GR	GEAR
G/REG	GENERATOR-REGULATOR
GRL	GRILLE
GRMT	GROMMET
G/SHIFT	GEARSHIFT
GSKT	GASKET
GVW	GROSS VEHICLE WEIGHT
H/BRK	HAND BRAKE
H/C	HIGH COMPRESSION
HD	HEAD
H/D	HEAVY DUTY
HDL	HANDLE
H/LIN	HEAD LINING
HDLS	HEADLESS
HDR	HEADER
HEMI	HEMISPHERICAL
HEX	HEXAGON
HGE	HINGE
H/GUIDE	HYDRAGUIDE
H/LP	HEADLAMP
H/PERF	HIGH PERFORMANCE
H/REST	HEAD REST
HSG	HOUSING
H/SNK	HEAT SINK
H/SHLD	HEAT SHIELD
HT	HEATER
HVY	HEAVY
HYD	HYDRAULIC
I/ARM	IDLER ARM
I.D.	INSIDE DIAMETER
IDENT	IDENTIFICATION
IGN	IGNITION
IN	INCH
INCL	INCLUSIVE-INCLUDES
IND	INDUSTRIAL
INDIC	INDICATOR
INL	INLET
INR	INNER
INS	INSULATING-INSULATION-INSULATOR
INST	INSTRUMENT-INSTRUCTION
INT	INTAKE
INTER	INTERMITTENTLY-INTERMEDIATE
INTL	INTERNAL
INTLK	INTERLOCK

ABBREVIATIONS (Cont'd)

I/PNL	INSTRUMENT PANEL
I/PULLEY	IDLER PULLEY
I/S	INSIDE
J	JAPAN
J/BLK	JUNCTION BLOCK
JNT	JOINT
K/DN	KICKDOWN
KDX	KNOCK DOWN EXPORT
KILO	KILOMETER
KNU	KNUCKLE
K/UP	KICKUP
LBS	POUNDS
L/C	LOW COMPRESSION
LCF	LOW CAB FORWARD
L/COMPT	LUGGAGE COMPARTMENT
LEA	LEATHER
LED	LIGHT EMITTING DIODE
LGH	LENGTH
LHD	LEFT HAND DRIVE
L.H. THD	LEFT HAND THREAD
LIC	LICENSE
LIN	LINING-LINER
LK	LOCK
LKG	LOCKING
LK/NUT	LOCK NUT
LK/WA	LOCK WASHER
LOC	LOCATING
LP	LAMP
LPG	LIQUID PROPANE GAS
L.S.H.	LOW SECTION HEIGHT
LT	LEFT
LUB	LUBRICANT-LUBRICATING
LUGG	LUGGAGE
LVR	LEVER
LWR	LOWER
M / I	MARINE / INDUSTRIAL
M/ADJ	MANUAL ADJUSTING
MAN	MANUAL
MANF	MANIFOLD
MAR	MARINE
MAX	MAXIMUM
MAX PERF	MAXIMUM PERFORMANCE
M/BRK	MANUAL BRAKE
MBR	MEMBER
M/CYL	MASTER CYLINDER
MECH	MECHANISM
MED	MEDIUM
MEDAL	MEDALLION
MIL	MILITARY
MIN	MINIMUM
MDLG	MOULDING
MOD	MODEL
M/MTRG	MAIN METERING
M.P.H.	MILES PER HOUR
MT	MOUNT
MTG	MOUNTING
MTR	MOTOR
M/TRANS	MANUAL TRANSMISSION
MTRG	METERING
NEG	NEGATIVE
NEUT	NEUTRAL
NI	NICKEL
NO. OR #	NUMBER
NOM	NOMINAL
NO	NITROGEN OXIDE EMISSION CONTROL
N/PLT	NAME PLATE
NRM	NON-REGULATED MARKETS
NUT / WA	NUT AND WASHER
O/CTR	OVER CENTER
O.D.	OUTSIDE DIAMETER
O/DRV	OVER DRIVE
O/GA	OIL GAUGE
OPER	OPERATING
OPNG	OPENING
OPP	OPPOSITE
OPT	OPTIONAL
O/PUMP	OIL PUMP
ORN	ORNAMENT
O/RUNN	OVERUNNING
O/S	OUTSIDE
O/SIZE	OVERSIZE
OTR	OUTER
OUTL	OUTLET
OV	OVAL
O/W	OPTIONAL WITH
O/WRAP	OVERWRAP
OZ	OUNCE
P	PITCH
PACK	PACKING
PARK	PARKING
PART	PARTIAL PARTITION
PASS	PASSENGER
P/BRK	POWER BRAKE
P/BTN	PUSH BUTTON
PC/BRD	PRINTED CIRCUIT BOARD
PED	PEDAL
PERF	PERFORMANCE
PIST	PISTON
PIV	PIVOT
PKG	PACKAGE
PL	PLAIN
P/LAMP	PARKING LAMP
PLR	PILLAR
PLT	PLATE-PLATED
PLUNG	PLUNGER
PL/WA	PLAIN WASHER
P/MTR	POTENTIOMETER
PNL	PANEL
PNTD	PAINTED
POS	POSITIVE
POLY	POLYESTER
P/PNL	POCKET PANEL
PRESS	PRESSURE
PRI	PRIMARY
PROD	PRODUCTION
P/ROD	PUSH ROD
PROP	PROPELLER
PRPG	PROPORTIONING
PSF	POUNDS PER SQUARE FOOT
PSI	POUNDS PER SQUARE INCH
P/STRG	POWER STEERING
PT	POINT
PTO	POWER TAKE OFF
PWR	POWER
Q/PNL	QUARTER PANEL
QTR	QUARTER
Q/WDO	QUARTER WINDOW
R	RADIUS
R/A	REAR AXLE
R/AXLE	REAR AXLE
RAD	RADIATOR
RC	CHINA
R/CONT	REMOTE CONTROL
RC/SHIFT	ROCKER SHAFT

ABBREVIATIONS (Cont'd)

RD	ROUND
R/DR	REAR DOOR
REC	RECEIVER
RECIR	RECIRCULATING
RECT	RECTANGULAR
RECTR	RECTIFIER
RED	REDUCTION
REFL	REFLECTOR
REG	REGULATOR
REINF	REINFORCEMENT
REL	RELEASE
REM	REMOTE
REQ	REQUIRED
RES	RESISTOR
RET	RETAINER
RETG	RETAINING
REV	REVERSE
REVERB	REVERBERATOR
R/FLR	REAR FLOOR
RHD	RIGHT HAND DRIVE
RHEO	RHEOSTAT
R.H. THD	RIGHT HAND THREAD
R/L	RIGHT AND LEFT
RPM	REVOLUTIONS PER MINUTE
R/QTR	REAR QUARTER
RR	REAR
RSVR	RESERVOIR
RT	RIGHT
R/WDO	REAR WINDOW
S	SWEDEN
S/ABS	SHOCK ABSORBER
S/C	SALES CODE
S/COMPT	SIDE COMPARTMENT
S/DEFL	STONE DEFLECTOR
SECT	SECTION
SER	SERIAL-SERVICE
S/EXH	SINGLE EXHAUST
S-FIN	SEMI-FINISHED
S/GR	STEERING GEAR
SHFT	SHIFT
SHLD	SHIELD
SIG	SIGNAL
S/KNU	STEERING KNUCKLE
SLD	SLIDE
SLDG	SLIDING
S/LP	STOP LAMP
SLTD	SLOTTED
SLV	SLEEVE
S/MBR	SIDE MARKER
SOC	SOCKET
SOL	SOLENOID
SPD	SPEED
SPEEDO	SPEEDOMETER
SPKR	SPEAKER
SPL	SPECIAL
SPL EQUIP	SPECIAL EQUIPMENT
SPRG	SPRING
S/PNL	SIDE PANEL
SP/SHLD	SPLASH SHIELD
SQ	SQUARE
S/R SHAFT	SINGLE ROCKER SHAFT
S/RAIL	SIDE RAIL
S/RING	SNAP RING
S/SHLD	SIDE SHIELD
S/SILL	SIDE SILL
S/SPD	SINGLE SPEED
STA	STATION-STATIONARY
STAB	STABILIZER
STD	STANDARD
STGHT	STRAIGHT
STL	STEEL
STRG	STEERING
STRKR	STRIKER
STRNR	STRAINER
STRTR	STARTER
SUCT	SUCTION
SUPT	SUPPORT
SUSP	SUSPENSION
SW	SWITCH
SYNCH	SYNCHRONIZER
T	TEETH
TAP	TAPPING
TBI	THROTTLE BODY INJECTION
T/BKL	TURN BUCKLE
T/BLK	TERMINAL BLOCK
T/COMP	TRIMMED COMPLETE
T/CONT	THROTTLE CONTROL
T/CONV	TORQUE CONVERTER
TEMP	TEMPERATURE
TERM	TERMINAL
T/GA	TEMPERATURE GAUGE
T-GATE	TAILGATE
THD	THREAD
THK	THICK
THERMO	THERMOSTAT
3RD	THIRD
THR	THRUST
THROT	THROTTLE
T.I.C.	THERMOSTATIC IGNITION CONTROL
T/LP	TAIL LAMP
TORQ	TORQUE
TORS	TORSION
TPI	THREADS PER INCH
T/PIPE	TAIL PIPE
T/PLT	TAPPING PLATE
T/PNL	TRIM PANEL
TPR	TAPER
TRANS	TRANSMISSION
TRANSF	TRANSFER
TRIMD	TRIMMED
T/SIG	TURN SIGNAL
TRUN.	TRUNNION
TST	TAIL STOP / TURNING
TR	TURKEY
T/STRIP	TACKING STRIP
TUB	TUBULAR
U/BODY	UNDERBODY
U/DRV	UNDERDRIVE
U/JNT	UNIVERSAL JOINT
UNIV	UNIVERSAL
UPR	UPPER
US	UNITED STATES (ALL 50 STATES)
US-49	UNITED STATES (49 STATES, NOT CALIFORNIA)
US-CA	UNITED STATES (CALIFORNIA ONLY)
U/S	UNDERSIZE
U/SEAT	UNDERSEAT
U/W	USED WITH
V	VENTUR (QTY OF CARB BBL)
VAC	VACUUM
VAL	VALVE
V/DMPR	VIBRATION DAMPER
VENT	VENTILATOR-VENTILATING
VERT	VERTICAL

ABBREVIATIONS (Cont'd)

VOL CONT	VOLUME CONTROL
V/REG	VOLTAGE REGULATOR
V/SPD	VARIABLE SPEED
V/WING	VENT WING
W	WATT
WA	WASHER
WAG	WAGON
WB	WHEELBASE
W/BRG	WHEEL BEARING
W/CORD	WEATHERCORD
WDO	WINDOW
WHL	WHEEL
W/HSE	WHEELHOUSE
W/LIFT	WINDOW LIFT
W/O	WITHOUT
W/PUMP	WATER PUMP
W/REG	WINDOW REGULATOR
W/SHLD	WINDSHIELD
W/STRIP	WEATHERSTRIP
WT	WEIGHT
W/WASHER	WINDSHIELD WASHER
W/WPR	WINDSHIELD WIPER
X/MBR	X MEMBER
YV	VENEZUELA

GROUP 1 - CATALOG NOTICES

ILLUSTRATION TITLE	GROUP-FIG. NO.
CJ-5,6,7,8, SCRAMBLER CHASSIS SECTION GROUP NUMBERS	Fig. 1-100
CJ-5,6,7,8, SCRAMBLER BODY SECTION GROUP NUMBERS	Fig. 1-200
XJ CHEROKEE, XJ WAGONEER, COMANCHE CHASSIS SECTION GROUP NUMBERS	Fig. 1-300
XJ CHEROKEE, XJ WAGONEER, COMANCHE BODY SECTION GROUP NUMBERS	Fig. 1-400
SJ CHEROKEE, SJ WAGONEER , J10, J20 CHASSIS SECTION GROUP NUMBERS	Fig. 1-500
SJ CHEROKEE, SJ WAGONEER, J10, J20 BODY SECTION GROUP NUMBERS	Fig. 1-600

ILLUSTRATION NOT AVAILABLE AT TIME OF PUBLICATION

CJ-5,6,7,8, SCRAMBLER CHASSIS SECTION GROUP NUMBERS
Figure 1-100

81J01 100

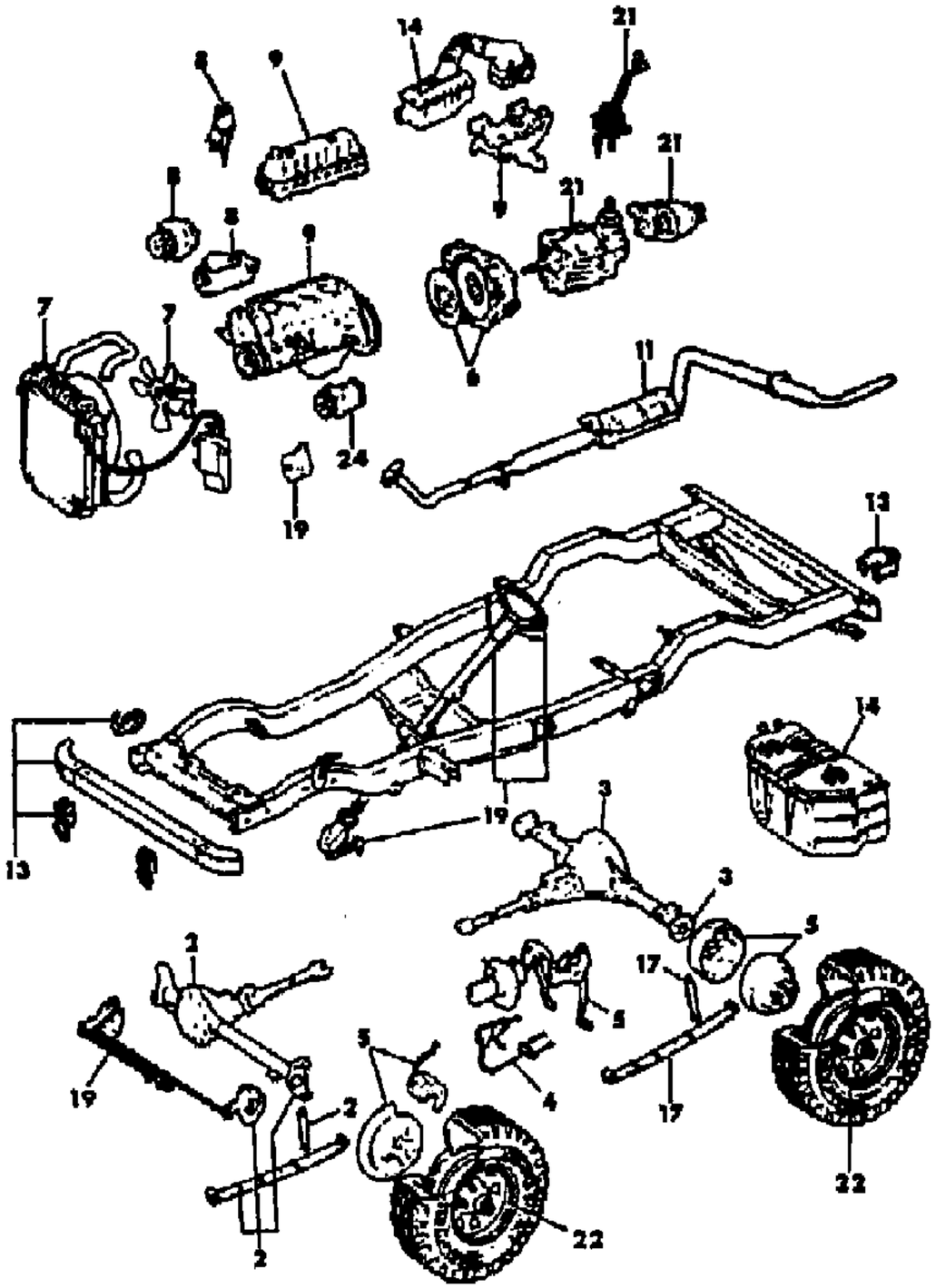

ITEM	PART NUMBER	QTY	BODY	MODEL	DESCRIPTION
			AMC	PLATE N	CHRYSLER GROUP
			10.00.1	- 10.99	09 Engine
			11.00.0	- 11.19	07 Cooling
			11.20.0	- 12.09	09 Engine
			12.10.0	- 13.39	14 Fuel
			13.40.0	- 13.79	25 Emission Systems
			13.80.0	- 13.84	19 Steering
			13.85.0	- 13.89	24 Heater and Air Conditioning
			13.90.0	- 15.99	09 Engine
			16.00.0	- 16.29	08 Electrical
			16.30.0	- 16.99	07 Cooling
			17.00.0	- 18.99	08 Electrical
			19.00.0	- 19.29	07 Cooling
			19.30.0	- 19.49	14 Fuel
			19.50.0	- 19.79	11 Exhaust
			19.80.0	- 19.99	09 Engine
			20.00.0	- 20.99	06 Clutch
			21.00.0	- 21.29	21M Transmission, Manual
			21.30.0	- 21.39	06 Clutch
			21.40.0	- 22.99	21M Transmission, Manual
			23.00.0	- 24.89	21A Transmission, Automatic
			24.90.0	- 24.99	07 Cooling
			25.00.0	- 25.99	21M Transmission, Manual
			26.00.0	- 26.09	16 Prop Shaft and U-Joints
			26.10.0	- 26.99	02 Front Suspension
			27.00.0	- 27.09	16 Prop Shafts
			27.10.0	- 29.99	03 Rear Axles
			30.00.0	- 30.99	13 Frame, Bumpers
			31.00.0	- 31.39	02 Front Suspension and Drive
			31.40.0	- 31.99	05 Service Brake
			32.00.0	- 32.29	02 Front Suspension
			32.30.0	- 32.99	05 Service Brake
			33.00.0	- 33.39	17 Rear Suspension
			33.40.0	- 33.99	05 Service Brake
			34.00.0	- 34.09	17 Rear Suspension
			34.10.0	- 34.29	03 Rear Axle
			34.30.0	- 34.99	05 Service Brake
			35.00.0	- 35.99	22 Wheels
			36.00.0	- 36.99	19 Steering

MODEL CODES

16=Cherokee 2 Dr.(1981-83)
17=Cherokee 2 Dr.(1981-83)
73=Cherokee 2WD-2 Dr.(1984-86)
74=Cherokee 2WD-4 Dr.(1984-86)
18=Cherokee 4 Dr.(1981-83)
77=Cherokee 4WD-2 Dr.(1984-86)
78=Cherokee 4WD-4 Dr.(1984-86)
85=CJ-5 (1981-83)
86=CJ-6(1981)
87=CJ-7(1981-86)
88=CJ-8, Scrambler(1981-86)
64=Comanche 2WD-6 Ft. Box(1986)
66=Comanche 2WD-7 Ft. Box(1986)
63=Comanche 4WD-6 Ft. Box(1986)
65=Comanche 4WD-7 Ft. Box(1986)
15=Grand Wagoneer 4 Dr.(1984-86)
25=J-10 Truck 7 Ft. Box(1981-84)
26=J10 Truck 8 Ft. Box(1981-86)
27=J-20 Truck 8 Ft. Box(1981-86)
15=Wagoneer 4 Dr.(1981-83)
75=Wagoneer 4WD-4 Dr.(1984-86)

BODY
CJ=CJ-5, CJ-6, CJ-7, CJ-8, Scrambler(1981-86)
MJ=Comanche Pickup(1986)

STYLES
SJ=Wagoneer(1981-83), Grand Wagoneer(1984-86), Cherokee(1981-83), J-10, J-20(1981-86)
XJ=Wagoneer(1984-86), Cherokee(1984-86)

AR = Use as Required - = Non Illustrated Part P.A.R. = Paint as Required

« RETURN TO GROUP INDEX »

81J01 100

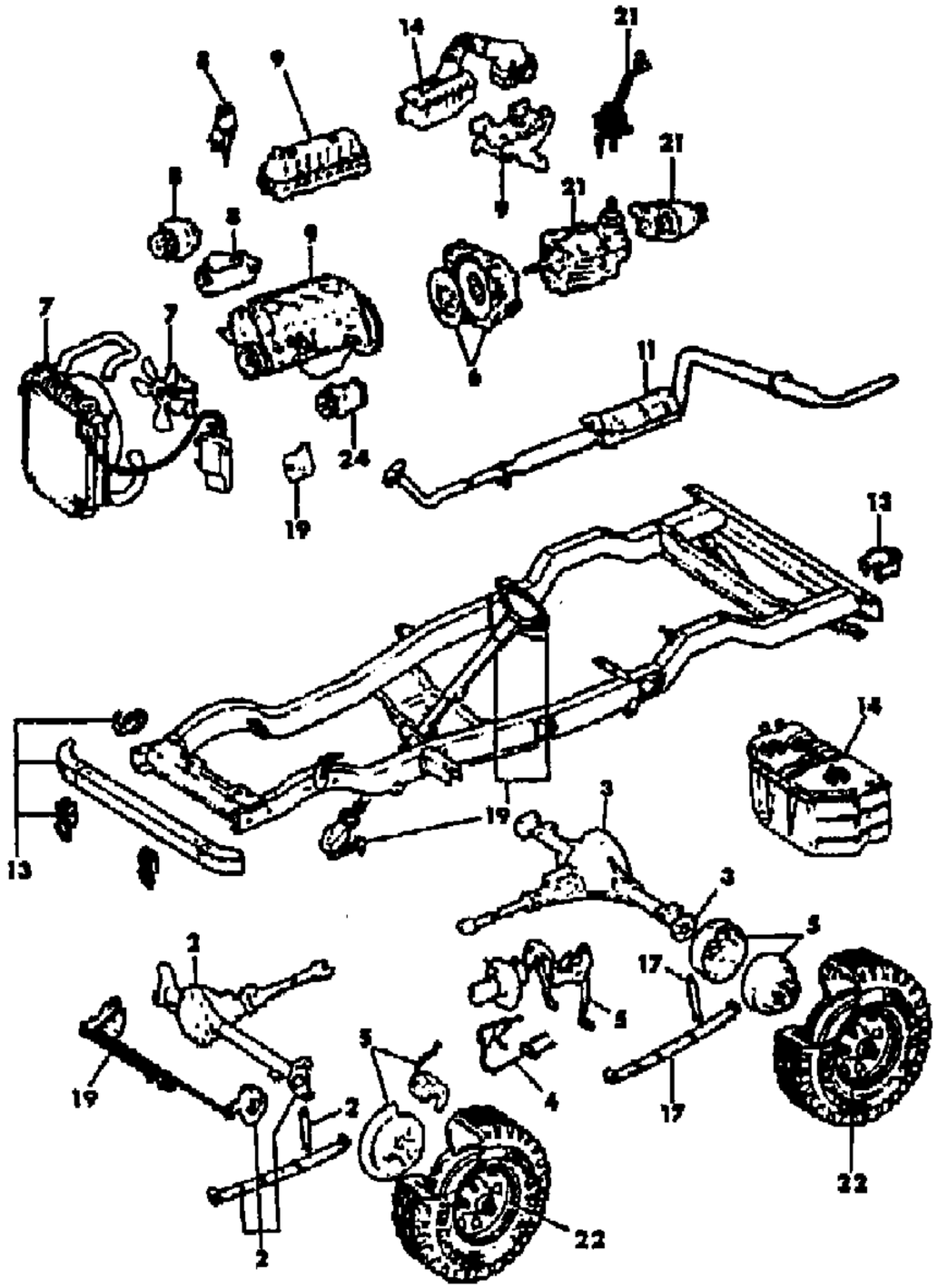

ITEM	PART NUMBER	QTY	BODY	MODEL	DESCRIPTION
			37.00.0	- 37.29	05 Service Brake
			37.30.0	- 37.39	06 Clutch
			37.40.0	- 37.59	14 Fuel
			37.60.0	- 37.99	05 Service Brake
			38.00.0	- 38.19	04 Parking Brake
			38.20.0	- 38.22	21M Transmission, Manual
			38.23.0	- 38.24	21A Transmission, Automatic
			38.25.0	- 38.99	21M Transmission, Manual

MODEL CODES

16=Cherokee 2 Dr.(1981-83)	78=Cherokee 4WD-4 Dr.(1984-86)	64=Comanche 2WD-6 Ft. Box(1986)	25=J-10 Truck 7 Ft. Box(1981-84)
17=Cherokee 2 Dr.(1981-83)	85=CJ-5 (1981-83)	66=Comanche 2WD-7 Ft. Box(1986)	26=J10 Truck 8 Ft. Box(1981-86)
73=Cherokee 2WD-2 Dr.(1984-86)	86=CJ-6(1981)	63=Comanche 4WD-6 Ft. Box(1986)	27=J-20 Truck 8 Ft. Box(1981-86)
74=Cherokee 2WD-4 Dr.(1984-86)	87=CJ-7(1981-86)	65=Comanche 4WD-7 Ft. Box(1986)	15=Wagoneer 4 Dr.(1981-83)
18=Cherokee 4 Dr.(1981-83)	88=CJ-8, Scrambler(1981-86)	15=Grand Wagoneer 4 Dr.(1984-86)	75=Wagoneer 4WD-4 Dr.(1984-86)
77=Cherokee 4WD-2 Dr.(1984-86)			

BODY
CJ=CJ-5, CJ-6, CJ-7, CJ-8, Scrambler(1981-86)
MJ=Comanche Pickup(1986)

STYLES
SJ=Wagoneer(1981-83), Grand Wagoneer(1984-86), Cherokee(1981-83), J-10, J-20(1981-86)
XJ=Wagoneer(1984-86), Cherokee(1984-86)

AR = Use as Required - = Non Illustrated Part P.A.R. = Paint as Required

CJ-5,6,7,8, SCRAMBLER BODY SECTION GROUP NUMBERS
Figure 1-200

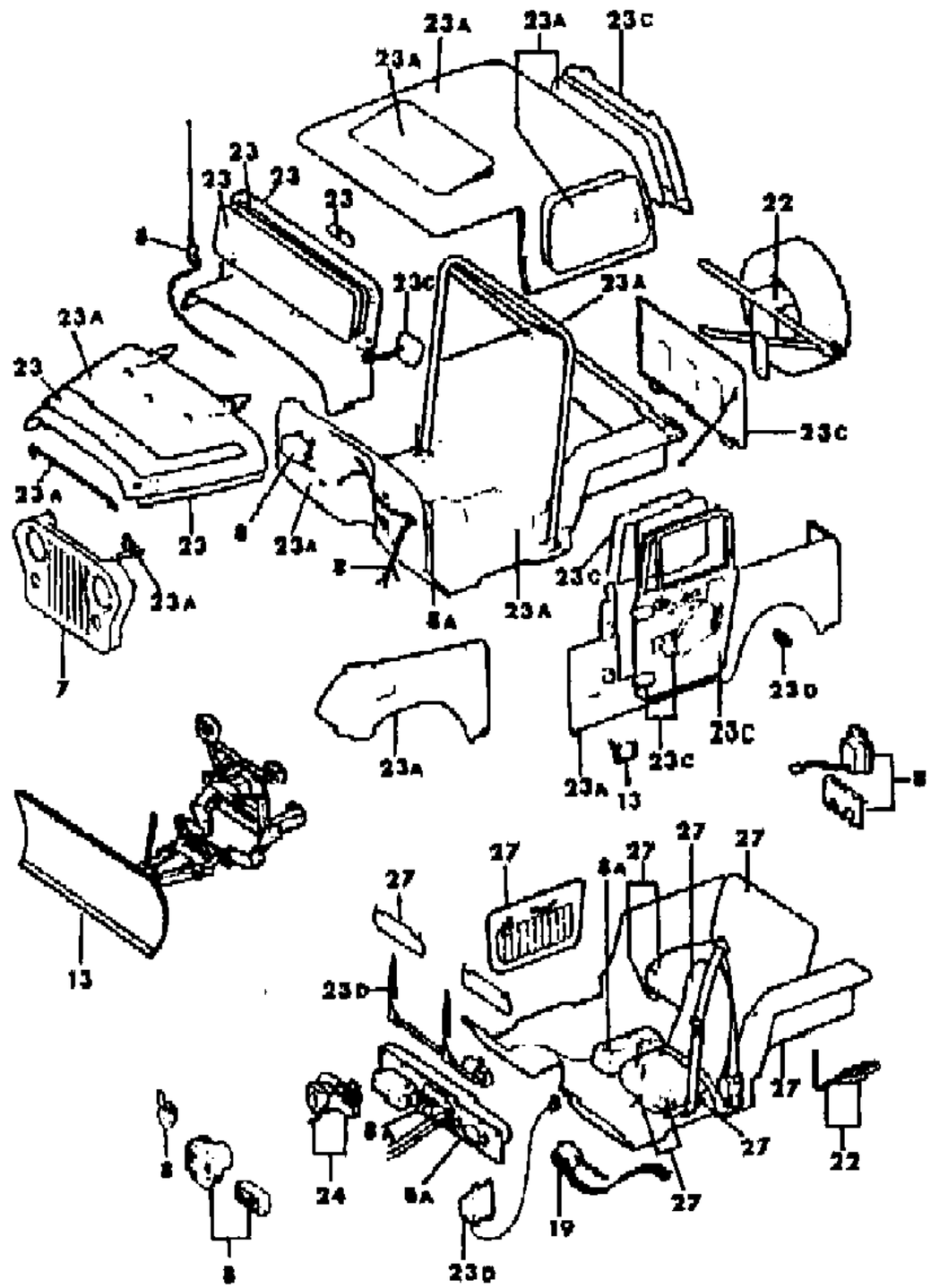

ITEM	PART NUMBER	QTY	BODY	MODEL	DESCRIPTION
			AMC	PLATE N	CHRYSLER GROUP
			---	---	---
			39.00.0	- 39.99	13 Frame
			40.00.0	- 46.99	23A Body - Sheet Metal Except Doors
			47.00.0	- 48.99	23C Body - Doors and Related Parts
			49.00.0	- 49.79	13 Frame
			49.80.0	- 49.99	23A Body - Sheet Metal except Doors
			50.00.0	- 54.99	23C Body - Doors, Misc.
			55.00.0	- 55.19	13 Frame, Bumpers
			55.20.0	- 55.79	23 Body - Exterior Ornamentation
			55.80.0	- 55.99	07 Cooling
			56.00.0	- 56.19	23 Body - Exterior Ornamentation
			56.20.0	- 56.99	23C Body - Doors, Misc.
			57.00.0	- 57.99	8A Body - Instrument Panel
			58.00.0	- 58.29	23A Body - Sheet Metal
			58.30.0	- 59.39	8A Body - Instrument Panel
			58.40.0	- 59.79	IT Interior Trim
			59.80.0	- 59.81	13 Frame, Bumpers
			59.82.0	- 59.84	09 Engine
			59.85.0	- 59.85	23 Body - Exterior Ornamentation
			59.86.0	- 59.99	13 Frame, Bumpers
			60.00.0	- 63.99	24 Heater, Air Conditioning
			64.00.0	- 64.99	23A Body - Sheet Metal
			65.00.0	- 67.99	23C Body - Doors, Misc.
			68.00.0	- 68.99	23A Body - Sheet Metal
			69.00.0	- 71.19	IT Interior Trim
			71.20.0	- 71.89	23A Body - Sheet Metal
			71.90.0	- 79.99	IT Interior Trim
			80.00.0	- 82.99	08 Electrical
			83.00.0	- 83.39	8A Body - Instrument Panel
			83.40.0	- 83.99	14 Fuel
			84.00.0	- 84.99	08 Electrical
			85.00.0	- 86.19	23D Body - Miscellaneous
			86.20.0	- 86.29	08 Electrical
			86.30.0	- 86.99	8A Body - Instrument Panel
			87.00.9	- 99.99	08 Electrical

MODEL CODES

16=Cherokee 2 Dr.(1981-83)
17=Cherokee 2 Dr.(1981-83)
73=Cherokee 2WD-2 Dr.(1984-86)
74=Cherokee 2WD-4 Dr.(1984-86)
18=Cherokee 4 Dr.(1981-83)
77=Cherokee 4WD-2 Dr.(1984-86)
78=Cherokee 4WD-4 Dr.(1984-86)
85=CJ-5 (1981-83)
86=CJ-6(1981)
87=CJ-7(1981-86)
88=CJ-8, Scrambler(1981-86)
64=Comanche 2WD-6 Ft. Box(1986)
66=Comanche 2WD-7 Ft. Box(1986)
63=Comanche 4WD-6 Ft. Box(1986)
65=Comanche 4WD-7 Ft. Box(1986)
15=Grand Wagoneer 4 Dr.(1984-86)
25=J-10 Truck 7 Ft. Box(1981-84)
26=J10 Truck 8 Ft. Box(1981-86)
27=J-20 Truck 8 Ft. Box(1981-86)
15=Wagoneer 4 Dr.(1981-83)
75=Wagoneer 4WD-4 Dr.(1984-86)

BODY
CJ=CJ-5, CJ-6, CJ-7, CJ-8, Scrambler(1981-86)
MJ=Comanche Pickup(1986)

STYLES
SJ=Wagoneer(1981-83), Grand Wagoneer(1984-86), Cherokee(1981-83), J-10, J-20(1981-86)
XJ=Wagoneer(1984-86), Cherokee(1984-86)

AR = Use as Required - = Non Illustrated Part P.A.R. = Paint as Required

« RETURN TO GROUP INDEX

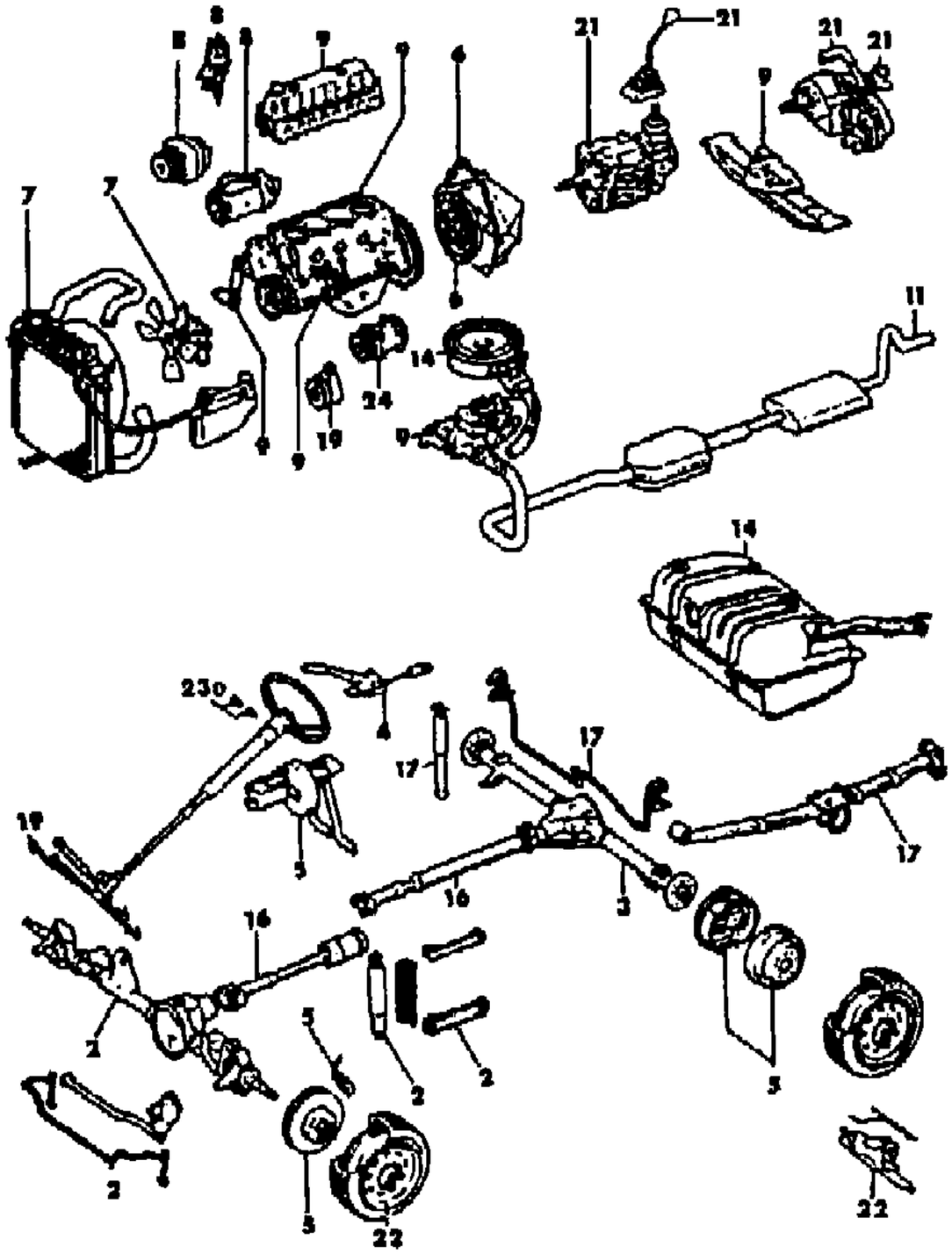

ITEM	PART NUMBER	QTY	BODY	MODEL	DESCRIPTION
			AMC	PLATE N	CHRYSLER GROUP
			10.00.1	- 10.99	09 Engine
			11.00.0	- 11.19	07 Cooling
			11.20.0	- 12.09	09 Engine
			12.10.0	- 13.39	14 Fuel
			13.40.0	- 13.79	25 Emission Systems
			13.80.0	- 13.84	19 Steering
			13.85.0	- 13.89	24 Heater and Air Conditioning
			13.90.0	- 15.99	09 Engine
			16.00.0	- 16.29	08 Electrical
			16.30.0	- 16.99	07 Cooling
			17.00.0	- 18.99	08 Electrical
			19.00.0	- 19.29	07 Cooling
			19.30.0	- 19.49	14 Fuel
			19.50.0	- 19.79	11 Exhaust
			19.80.0	- 19.99	09 Engine
			20.00.0	- 20.99	06 Clutch
			21.00.0	- 21.29	21M Transmission, Manual
			21.30.0	- 21.39	06 Clutch
			21.40.0	- 22.99	21M Transmission, Manual
			23.00.0	- 24.89	21A Transmission, Automatic
			24.90.0	- 24.99	07 Cooling
			25.00.0	- 25.99	21M Transmission, Manual
			26.00.0	- 26.09	16 Prop Shaft and U-Joints
			26.10.0	- 26.99	02 Front Suspension
			27.00.0	- 27.09	16 Prop Shafts
			27.10.0	- 29.99	03 Rear Axles
			30.00.0	- 30.99	13 Frame, Bumpers
			31.00.0	- 31.39	02 Front Suspension and Drive
			31.40.0	- 31.99	05 Service Brake
			32.00.0	- 32.29	02 Front Suspension
			32.30.0	- 32.99	05 Service Brake
			33.00.0	- 33.39	17 Rear Suspension
			33.40.0	- 33.99	05 Service Brake
			34.00.0	- 34.09	17 Rear Suspension
			34.10.0	- 34.29	03 Rear Axle
			34.30.0	- 34.99	05 Service Brake
			35.00.0	- 35.99	22 Wheels
			36.00.0	- 36.99	19 Steering

MODEL CODES

16=Cherokee 2 Dr.(1981-83)
17=Cherokee 2 Dr.(1981-83)
73=Cherokee 2WD-2 Dr.(1984-86)
74=Cherokee 2WD-4 Dr.(1984-86)
18=Cherokee 4 Dr.(1981-83)
77=Cherokee 4WD-2 Dr.(1984-86)
78=Cherokee 4WD-4 Dr.(1984-86)
85=CJ-5 (1981-83)
86=CJ-6(1981)
87=CJ-7(1981-86)
88=CJ-8, Scrambler(1981-86)
64=Comanche 2WD-6 Ft. Box(1986)
66=Comanche 2WD-7 Ft. Box(1986)
63=Comanche 4WD-6 Ft. Box(1986)
65=Comanche 4WD-7 Ft. Box(1986)
15=Grand Wagoneer 4 Dr.(1984-86)
25=J-10 Truck 7 Ft. Box(1981-84)
26=J10 Truck 8 Ft. Box(1981-86)
27=J-20 Truck 8 Ft. Box(1981-86)
15=Wagoneer 4 Dr.(1981-83)
75=Wagoneer 4WD-4 Dr.(1984-86)

BODY
CJ=CJ-5, CJ-6, CJ-7, CJ-8, Scrambler(1981-86)
MJ=Comanche Pickup(1986)

STYLES
SJ=Wagoneer(1981-83), Grand Wagoneer(1984-86), Cherokee(1981-83), J-10, J-20(1981-86)
XJ=Wagoneer(1984-86), Cherokee(1984-86)

AR = Use as Required - = Non Illustrated Part P.A.R. = Paint as Required

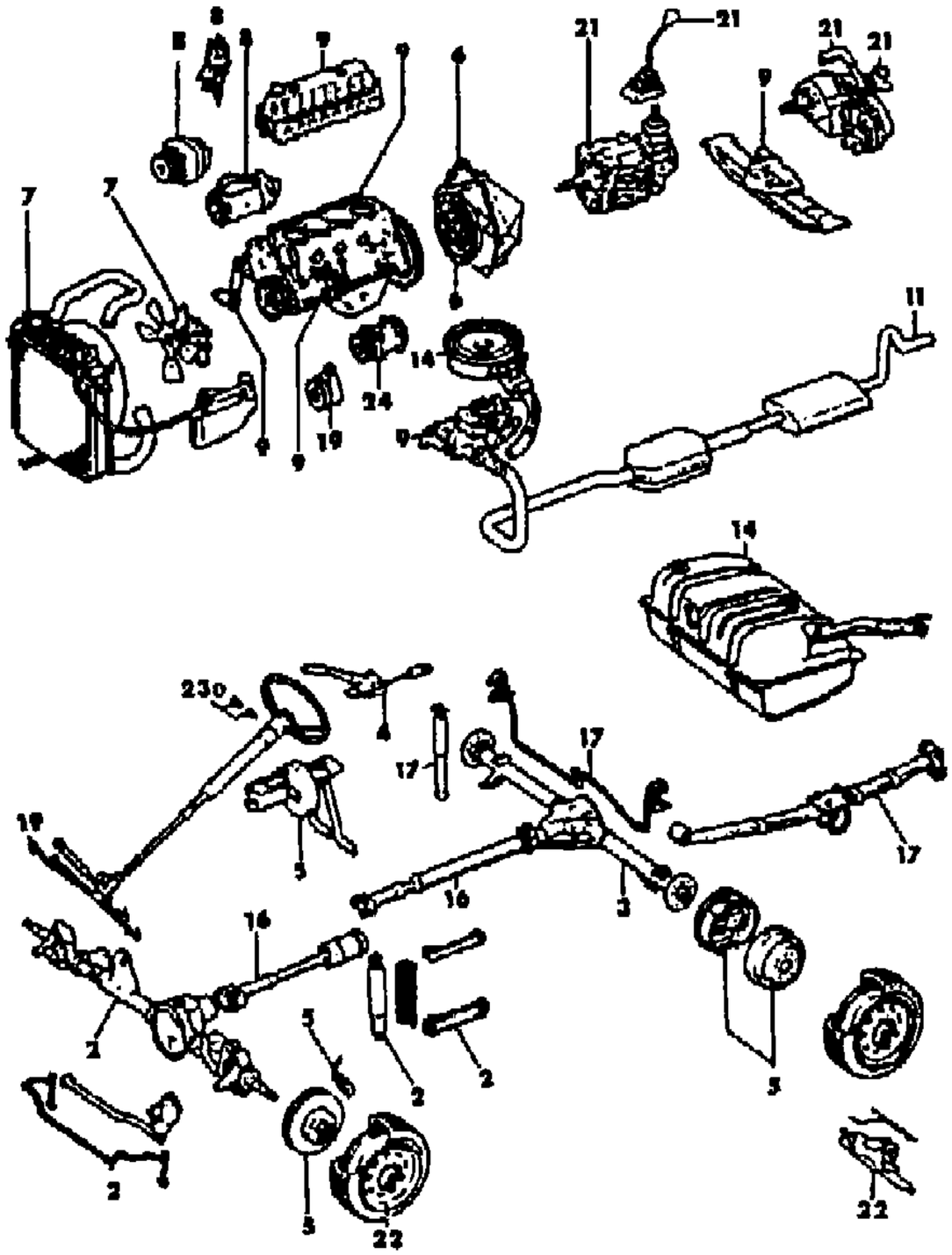

ITEM	PART NUMBER	QTY	BODY	MODEL	DESCRIPTION
			37.00.0	- 37.29	05 Service Brake
			37.30.0	- 37.39	06 Clutch
			37.40.0	- 37.59	14 Fuel
			37.60.0	- 37.99	05 Service Brake
			38.00.0	- 38.19	04 Parking Brake
			38.20.0	- 38.22	21M Transmission, Manual
			38.23.0	- 38.24	21A Transmission, Automatic
			38.25.0	- 38.99	21M Transmission, Manual

MODEL CODES
16=Cherokee 2 Dr.(1981-83)
17=Cherokee 2 Dr.(1981-83)
73=Cherokee 2WD-2 Dr.(1984-86)
74=Cherokee 2WD-4 Dr.(1984-86)
18=Cherokee 4 Dr.(1981-83)
77=Cherokee 4WD-2 Dr.(1984-86)
78=Cherokee 4WD-4 Dr.(1984-86)
85=CJ-5 (1981-83)
86=CJ-6(1981)
87=CJ-7(1981-86)
88=CJ-8, Scrambler(1981-86)
64=Comanche 2WD-6 Ft. Box(1986)
66=Comanche 2WD-7 Ft. Box(1986)
63=Comanche 4WD-6 Ft. Box(1986)
65=Comanche 4WD-7 Ft. Box(1986)
15=Grand Wagoneer 4 Dr.(1984-86)
25=J-10 Truck 7 Ft. Box(1981-84)
26=J10 Truck 8 Ft. Box(1981-86)
27=J-20 Truck 8 Ft. Box(1981-86)
15=Wagoneer 4 Dr.(1981-83)
75=Wagoneer 4WD-4 Dr.(1984-86)

BODY
CJ=CJ-5, CJ-6, CJ-7, CJ-8, Scrambler(1981-86)
MJ=Comanche Pickup(1986)

STYLES
SJ=Wagoneer(1981-83), Grand Wagoneer(1984-86), Cherokee(1981-83), J-10, J-20(1981-86)
XJ=Wagoneer(1984-86), Cherokee(1984-86)

AR = Use as Required - = Non Illustrated Part P.A.R. = Paint as Required

XJ CHEROKEE, XJ WAGONEER, COMANCHE BODY SECTION GROUP NUMBERS
Figure 1-400

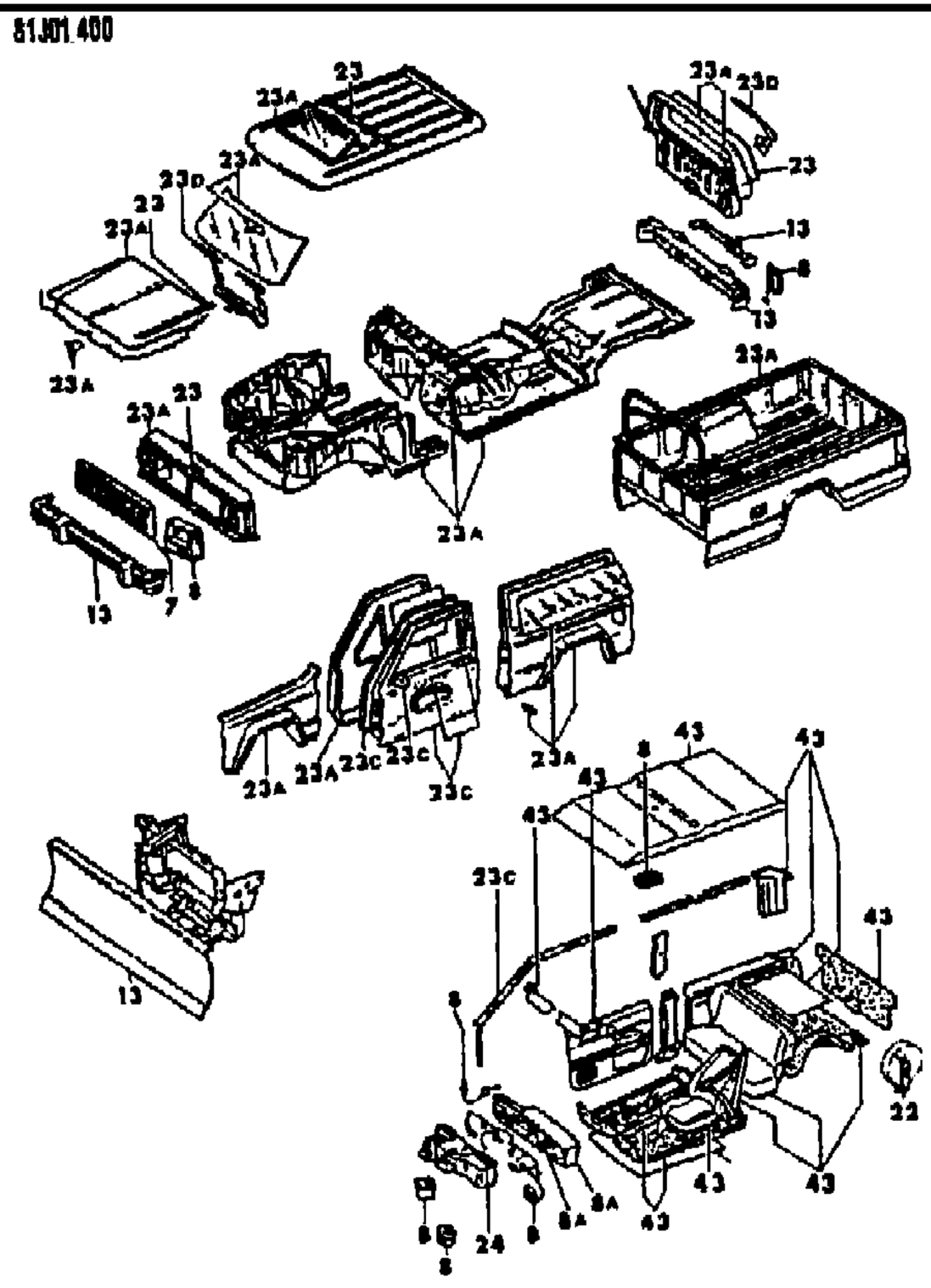

ITEM	PART NUMBER	QTY	BODY	MODEL	DESCRIPTION
			AMC	PLATE N	CHRYSLER GROUP
			---	---	---
			39.00.0	- 39.99	13 Frame
			40.00.0	- 46.99	23A Body - Sheet Metal Except Doors
			47.00.0	- 48.99	23C Body - Doors and Related Parts
			49.00.0	- 49.79	13 Frame
			49.80.0	- 49.99	23A Body - Sheet Metal except Doors
			50.00.0	- 54.99	23C Body - Doors, Misc.
			55.00.0	- 55.19	13 Frame, Bumpers
			55.20.0	- 55.79	23 Body - Exterior Ornamentation
			55.80.0	- 55.99	07 Cooling
			56.00.0	- 56.19	23 Body - Exterior Ornamentation
			56.20.0	- 56.99	23C Body - Doors, Misc.
			57.00.0	- 57.99	8A Body - Instrument Panel
			58.00.0	- 58.29	23A Body - Sheet Metal
			58.30.0	- 59.39	8A Body - Instrument Panel
			58.40.0	- 59.79	IT Interior Trim
			59.80.0	- 59.81	13 Frame, Bumpers
			59.82.0	- 59.84	09 Engine
			59.85.0	- 59.85	23 Body - Exterior Ornamentation
			59.86.0	- 59.99	13 Frame, Bumpers
			60.00.0	- 63.99	24 Heater, Air Conditioning
			64.00.0	- 64.99	23A Body - Sheet Metal
			65.00.0	- 67.99	23C Body - Doors, Misc.
			68.00.0	- 68.99	23A Body - Sheet Metal
			69.00.0	- 71.19	IT Interior Trim
			71.20.0	- 71.89	23A Body - Sheet Metal
			71.90.0	- 79.99	IT Interior Trim
			80.00.0	- 82.99	08 Electrical
			83.00.0	- 83.39	8A Body - Instrument Panel
			83.40.0	- 83.99	14 Fuel
			84.00.0	- 84.99	08 Electrical
			85.00.0	- 86.19	23D Body - Miscellaneous
			86.20.0	- 86.29	08 Electrical
			86.30.0	- 86.99	8A Body - Instrument Panel
			87.00.9	- 99.99	08 Electrical

MODEL CODES

16=Cherokee 2 Dr.(1981-83)
17=Cherokee 2 Dr.(1981-83)
73=Cherokee 2WD-2 Dr.(1984-86)
74=Cherokee 2WD-4 Dr.(1984-86)
18=Cherokee 4 Dr.(1981-83)
77=Cherokee 4WD-2 Dr.(1984-86)
78=Cherokee 4WD-4 Dr.(1984-86)
85=CJ-5 (1981-83)
86=CJ-6(1981)
87=CJ-7(1981-86)
88=CJ-8, Scrambler(1981-86)
64=Comanche 2WD-6 Ft. Box(1986)
66=Comanche 2WD-7 Ft. Box(1986)
63=Comanche 4WD-6 Ft. Box(1986)
65=Comanche 4WD-7 Ft. Box(1986)
15=Grand Wagoneer 4 Dr.(1984-86)
25=J-10 Truck 7 Ft. Box(1981-84)
26=J10 Truck 8 Ft. Box(1981-86)
27=J-20 Truck 8 Ft. Box(1981-86)
15=Wagoneer 4 Dr.(1981-83)
75=Wagoneer 4WD-4 Dr.(1984-86)

BODY
CJ=CJ-5, CJ-6, CJ-7, CJ-8, Scrambler(1981-86)
MJ=Comanche Pickup(1986)

STYLES
SJ=Wagoneer(1981-83), Grand Wagoneer(1984-86), Cherokee(1981-83), J-10, J-20(1981-86)
XJ=Wagoneer(1984-86), Cherokee(1984-86)

AR = Use as Required - = Non Illustrated Part P.A.R. = Paint as Required

« RETURN TO GROUP INDEX

SJ CHEROKEE, SJ WAGONEER , J10, J20 CHASSIS SECTION GROUP NUMBERS
Figure 1-500

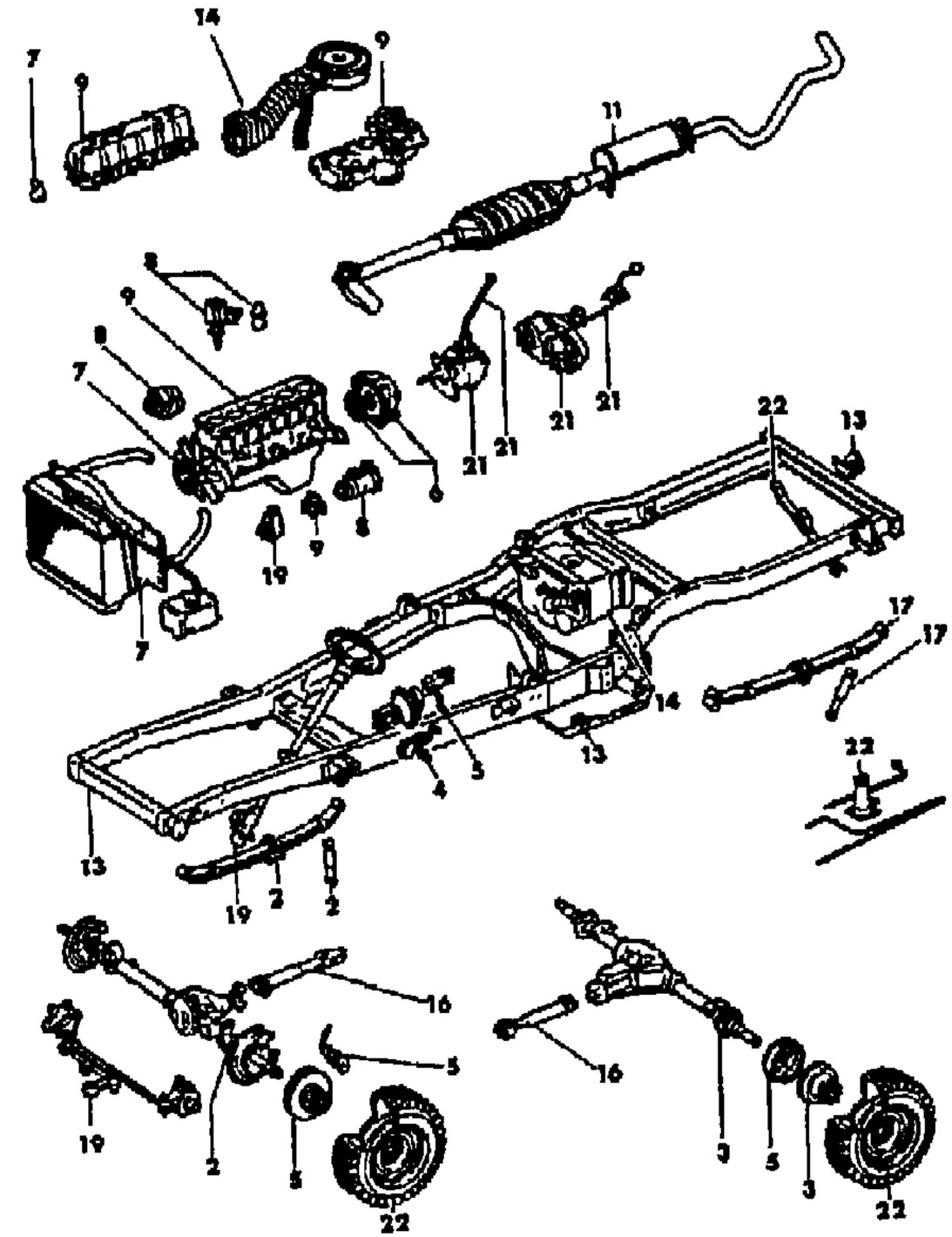

ITEM	PART NUMBER	QTY	BODY	MODEL	DESCRIPTION
			AMC	PLATE N	CHRYSLER GROUP
			10.00.1	- 10.99	09 Engine
			11.00.0	- 11.19	07 Cooling
			11.20.0	- 12.09	09 Engine
			12.10.0	- 13.39	14 Fuel
			13.40.0	- 13.79	25 Emission Systems
			13.80.0	- 13.84	19 Steering
			13.85.0	- 13.89	24 Heater and Air Conditioning
			13.90.0	- 15.99	09 Engine
			16.00.0	- 16.29	08 Electrical
			16.30.0	- 16.99	07 Cooling
			17.00.0	- 18.99	08 Electrical
			19.00.0	- 19.29	07 Cooling
			19.30.0	- 19.49	14 Fuel
			19.50.0	- 19.79	11 Exhaust
			19.80.0	- 19.99	09 Engine
			20.00.0	- 20.99	06 Clutch
			21.00.0	- 21.29	21M Transmission, Manual
			21.30.0	- 21.39	06 Clutch
			21.40.0	- 22.99	21M Transmission, Manual
			23.00.0	- 24.89	21A Transmission, Automatic
			24.90.0	- 24.99	07 Cooling
			25.00.0	- 25.99	21M Transmission, Manual
			26.00.0	- 26.09	16 Prop Shaft and U-Joints
			26.10.0	- 26.99	02 Front Suspension
			27.00.0	- 27.09	16 Prop Shafts
			27.10.0	- 29.99	03 Rear Axles
			30.00.0	- 30.99	13 Frame, Bumpers
			31.00.0	- 31.39	02 Front Suspension and Drive
			31.40.0	- 31.99	05 Service Brake
			32.00.0	- 32.29	02 Front Suspension
			32.30.0	- 32.99	05 Service Brake
			33.00.0	- 33.39	17 Rear Suspension
			33.40.0	- 33.99	05 Service Brake
			34.00.0	- 34.09	17 Rear Suspension
			34.10.0	- 34.29	03 Rear Axle
			34.30.0	- 34.99	05 Service Brake
			35.00.0	- 35.99	22 Wheels
			36.00.0	- 36.99	19 Steering

MODEL CODES

16=Cherokee 2 Dr.(1981-83)
17=Cherokee 2 Dr.(1981-83)
73=Cherokee 2WD-2 Dr.(1984-86)
74=Cherokee 2WD-4 Dr.(1984-86)
18=Cherokee 4 Dr.(1981-83)
77=Cherokee 4WD-2 Dr.(1984-86)
78=Cherokee 4WD-4 Dr.(1984-86)
85=CJ-5 (1981-83)
86=CJ-6(1981)
87=CJ-7(1981-86)
88=CJ-8, Scrambler(1981-86)
64=Comanche 2WD-6 Ft. Box(1986)
66=Comanche 2WD-7 Ft. Box(1986)
63=Comanche 4WD-6 Ft. Box(1986)
65=Comanche 4WD-7 Ft. Box(1986)
15=Grand Wagoneer 4 Dr.(1984-86)
25=J-10 Truck 7 Ft. Box(1981-84)
26=J10 Truck 8 Ft. Box(1981-86)
27=J-20 Truck 8 Ft. Box(1981-86)
15=Wagoneer 4 Dr.(1981-83)
75=Wagoneer 4WD-4 Dr.(1984-86)

BODY
CJ=CJ-5, CJ-6, CJ-7, CJ-8, Scrambler(1981-86)
MJ=Comanche Pickup(1986)

STYLES
SJ=Wagoneer(1981-83), Grand Wagoneer(1984-86), Cherokee(1981-83), J-10, J-20(1981-86)
XJ=Wagoneer(1984-86), Cherokee(1984-86)

AR = Use as Required - = Non Illustrated Part P.A.R. = Paint as Required

« RETURN TO GROUP INDEX »

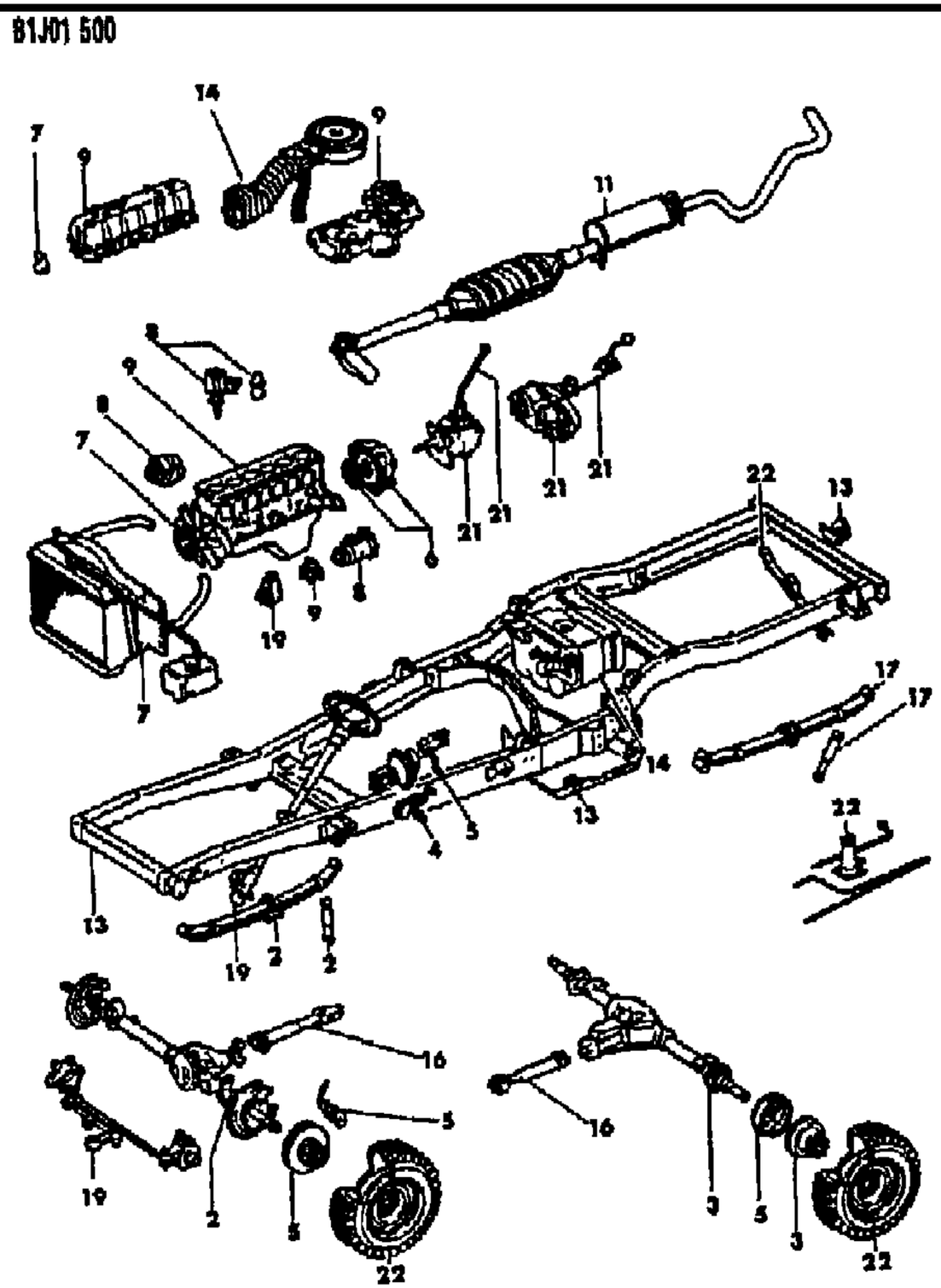

ITEM	PART NUMBER	QTY	BODY	MODEL	DESCRIPTION
			37.00.0	- 37.29	05 Service Brake
			37.30.0	- 37.39	06 Clutch
			37.40.0	- 37.59	14 Fuel
			37.60.0	- 37.99	05 Service Brake
			38.00.0	- 38.19	04 Parking Brake
			38.20.0	- 38.22	21M Transmission, Manual
			38.23.0	- 38.24	21A Transmission, Automatic
			38.25.0	- 38.99	21M Transmission, Manual

MODEL CODES

16=Cherokee 2 Dr.(1981-83)	78=Cherokee 4WD-4 Dr.(1984-86)	64=Comanche 2WD-6 Ft. Box(1986)	25=J-10 Truck 7 Ft. Box(1981-84)
17=Cherokee 2 Dr.(1981-83)	85=CJ-5 (1981-83)	66=Comanche 2WD-7 Ft. Box(1986)	26=J10 Truck 8 Ft. Box(1981-86)
73=Cherokee 2WD-2 Dr.(1984-86)	86=CJ-6(1981)	63=Comanche 4WD-6 Ft. Box(1986)	27=J-20 Truck 8 Ft. Box(1981-86)
74=Cherokee 2WD-4 Dr.(1984-86)	87=CJ-7(1981-86)	65=Comanche 4WD-7 Ft. Box(1986)	15=Wagoneer 4 Dr.(1981-83)
18=Cherokee 4 Dr.(1981-83)	88=CJ-8, Scrambler(1981-86)	15=Grand Wagoneer 4 Dr.(1984-86)	75=Wagoneer 4WD-4 Dr.(1984-86)
77=Cherokee 4WD-2 Dr.(1984-86)			

BODY
CJ=CJ-5, CJ-6, CJ-7, CJ-8, Scrambler(1981-86)
MJ=Comanche Pickup(1986)

STYLES
SJ=Wagoneer(1981-83), Grand Wagoneer(1984-86), Cherokee(1981-83), J-10, J-20(1981-86)
XJ=Wagoneer(1984-86), Cherokee(1984-86)

AR = Use as Required - = Non Illustrated Part P.A.R. = Paint as Required

SJ CHEROKEE, SJ WAGONEER, J10, J20 BODY SECTION GROUP NUMBERS
Figure 1-600

81J01 600

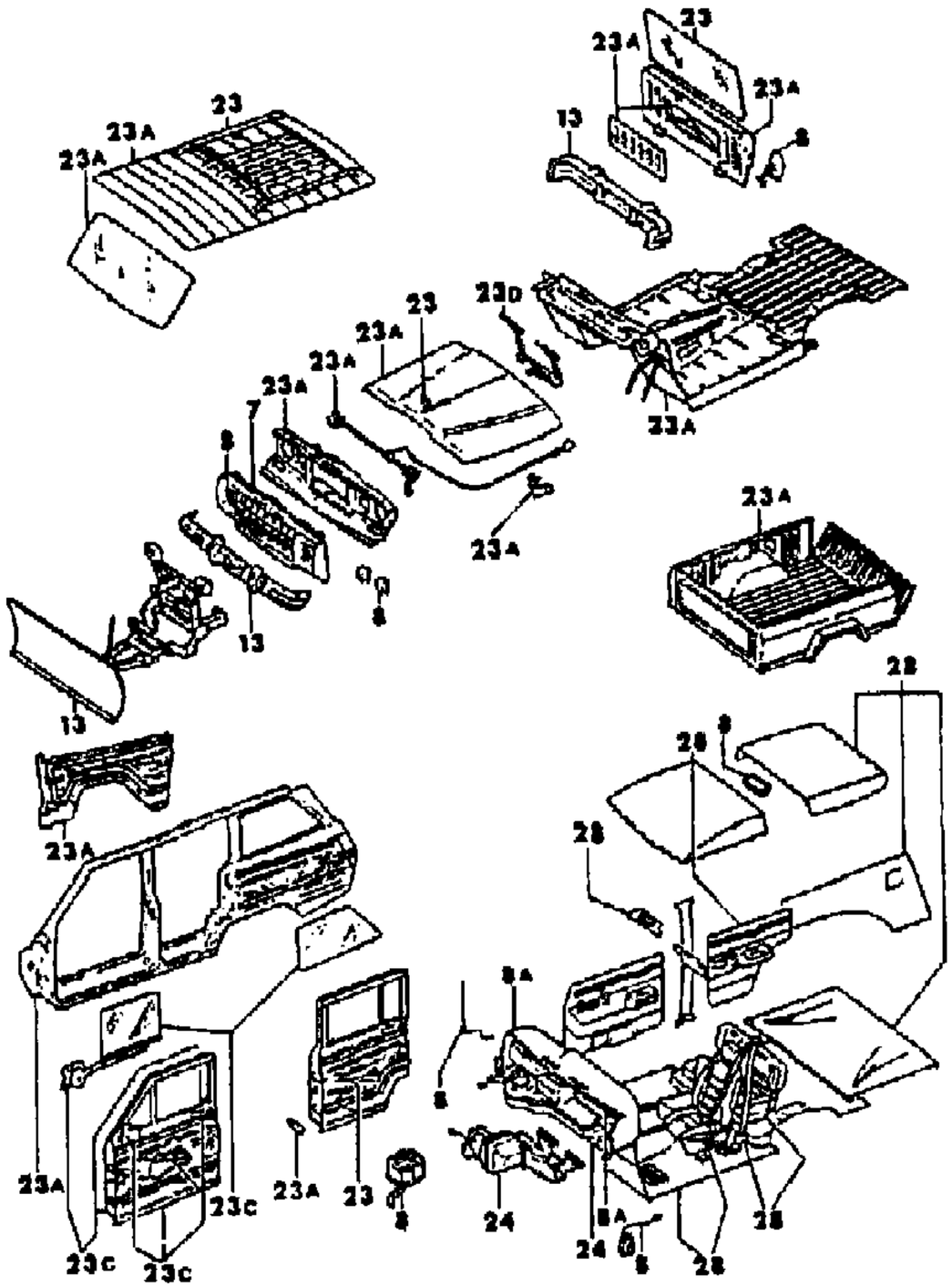

ITEM	PART NUMBER	QTY	BODY	MODEL	DESCRIPTION
			AMC	PLATE N	CHRYSLER GROUP
			---	---	---
			39.00.0	- 39.99	13 Frame
			40.00.0	- 46.99	23A Body - Sheet Metal Except Doors
			47.00.0	- 48.99	23C Body - Doors and Related Parts
			49.00.0	- 49.79	13 Frame
			49.80.0	- 49.99	23A Body - Sheet Metal except Doors
			50.00.0	- 54.99	23C Body - Doors, Misc.
			55.00.0	- 55.19	13 Frame, Bumpers
			55.20.0	- 55.79	23 Body - Exterior Ornamentation
			55.80.0	- 55.99	07 Cooling
			56.00.0	- 56.19	23 Body - Exterior Ornamentation
			56.20.0	- 56.99	23C Body - Doors, Misc.
			57.00.0	- 57.99	8A Body - Instrument Panel
			58.00.0	- 58.29	23A Body - Sheet Metal
			58.30.0	- 59.39	8A Body - Instrument Panel
			58.40.0	- 59.79	IT Interior Trim
			59.80.0	- 59.81	13 Frame, Bumpers
			59.82.0	- 59.84	09 Engine
			59.85.0	- 59.85	23 Body - Exterior Ornamentation
			59.86.0	- 59.99	13 Frame, Bumpers
			60.00.0	- 63.99	24 Heater, Air Conditioning
			64.00.0	- 64.99	23A Body - Sheet Metal
			65.00.0	- 67.99	23C Body - Doors, Misc.
			68.00.0	- 68.99	23A Body - Sheet Metal
			69.00.0	- 71.19	IT Interior Trim
			71.20.0	- 71.89	23A Body - Sheet Metal
			71.90.0	- 79.99	IT Interior Trim
			80.00.0	- 82.99	08 Electrical
			83.00.0	- 83.39	8A Body - Instrument Panel
			83.40.0	- 83.99	14 Fuel
			84.00.0	- 84.99	08 Electrical
			85.00.0	- 86.19	23D Body - Miscellaneous
			86.20.0	- 86.29	08 Electrical
			86.30.0	- 86.99	8A Body - Instrument Panel
			87.00.9	- 99.99	08 Electrical

MODEL CODES

16=Cherokee 2 Dr.(1981-83)
17=Cherokee 2 Dr.(1981-83)
73=Cherokee 2WD-2 Dr.(1984-86)
74=Cherokee 2WD-4 Dr.(1984-86)
18=Cherokee 4 Dr.(1981-83)
77=Cherokee 4WD-2 Dr.(1984-86)
78=Cherokee 4WD-4 Dr.(1984-86)
85=CJ-5 (1981-83)
86=CJ-6(1981)
87=CJ-7(1981-86)
88=CJ-8, Scrambler(1981-86)
64=Comanche 2WD-6 Ft. Box(1986)
66=Comanche 2WD-7 Ft. Box(1986)
63=Comanche 4WD-6 Ft. Box(1986)
65=Comanche 4WD-7 Ft. Box(1986)
15=Grand Wagoneer 4 Dr.(1984-86)
25=J-10 Truck 7 Ft. Box(1981-84)
26=J10 Truck 8 Ft. Box(1981-86)
27=J-20 Truck 8 Ft. Box(1981-86)
15=Wagoneer 4 Dr.(1981-83)
75=Wagoneer 4WD-4 Dr.(1984-86)

BODY

CJ=CJ-5, CJ-6, CJ-7, CJ-8, Scrambler(1981-86)
MJ=Comanche Pickup(1986)

STYLES

SJ=Wagoneer(1981-83), Grand Wagoneer(1984-86), Cherokee(1981-83), J-10, J-20(1981-86)
XJ=Wagoneer(1984-86), Cherokee(1984-86)

AR = Use as Required - = Non Illustrated Part P.A.R. = Paint as Required

« RETURN TO GROUP INDEX

ILLUSTRATION NOT AVAILABLE AT TIME OF PUBLICATION

GROUP 2 - FRONT SUSPENSION & DRIVE

ILLUSTRATION TITLE	GROUP-FIG. NO.
FRONT SUSPENSION	
BAR, FRONT STABILIZER CJ-5,6,7,8, SCRAMBLER	Fig. 2-100
BAR, FRONT STABILIZER XJ CHEROKEE, XJ WAGONEER COMANCHE	Fig. 2-200
BAR, FRONT STABILIZER SJ CHEROKEE, SJ WAGONEER J10, J20	Fig. 2-300
FRONT SPRING ASSEMBLIES AND LEAVES CJ-5,6,7,8, SCRAMBLER	Fig. 2-400
FRONT SPRING COMPONENTS AND SHOCK ABSORBERS CJ-5,6,7,8, SCRAMBLER	Fig. 2-500
FRONT SPRING AND SHOCK ABSORBER XJ CHEROKEE, XJ WAGONEER COMANCHE	Fig. 2-600
FRONT SUSPENSION ARMS XJ CHEROKEE, XJ WAGONEER COMANCHE	Fig. 2-700
FRONT SPRING AND SHOCK ABSORBER SJ CHEROKEE, SJ WAGONEER J10, J20	Fig. 2-800
DUAL FRONT SHOCK ABSORBERS SJ CHEROKEE, J10	Fig. 2-900
FRONT AXLES	
AXLE ASSEMBLY, FRONT CJ-5,6,7,8, SCRAMBLER	Fig. 2-1000
HOUSING, FRONT AXLE CJ-5,6,7,8, SCRAMBLER	Fig. 2-1100
DIFFERENTIAL, FRONT AXLE CJ-5,6,7,8, SCRAMBLER	Fig. 2-1200
SHAFTS, FRONT AXLE CJ-5,6,7,8, SCRAMBLER	Fig. 2-1300
AXLE ASSEMBLY, FRONT FOUR WHEEL DRIVE XJ CHEROKEE, XJ WAGONEER, COMANCHE	Fig. 2-1400
HOUSING, FRONT AXLE FOUR WHEEL DRIVE WITHOUT DISCONNECT XJ CHEROKEE, XJ WAGONEER, COMANCHE	Fig. 2-1500
HOUSING, FRONT AXLE FOUR WHEEL DRIVE WITH DISCONNECT XJ CHEROKEE, XJ WAGONEER, COMANCHE	Fig. 2-1600
HOUSING, FRONT AXLE TWO WHEEL DRIVE XJ CHEROKEE, XJ WAGONEER, COMANCHE	Fig. 2-1700
DIFFERENTIAL, FRONT AXLE XJ CHEROKEE, XJ WAGONEER COMANCHE	Fig. 2-1800
SHAFTS, FRONT AXLE WITHOUT DISCONNECT, WITH CARDAN XJ CHEROKEE, XJ WAGONEER, COMANCHE	Fig. 2-1900
SHAFTS, FRONT AXLE WITHOUT DISCONNECT, WITH CONSTANT VELOCITY XJ CHEROKEE, XJ WAGONEER, COMANCHE	Fig. 2-2000
SHAFTS, FRONT AXLE WITH DISCONNECT, WITH CARDAN XJ CHEROKEE, XJ WAGONEER, COMANCHE	Fig. 2-2100
SHAFTS, FRONT AXLE WITH DISCONNECT, WITH CONSTANT VELOCITY XJ CHEROKEE, XJ WAGONEER, COMANCHE	Fig. 2-2200
AXLE ASSEMBLY, FRONT SJ CHEROKEE, SJ WAGONEER J10, J20	Fig. 2-2300
HOUSING, FRONT AXLE WITHOUT DISCONNECT SJ CHEROKEE, SJ WAGONEER, J10, J20	Fig. 2-2400
HOUSING, FRONT AXLE WITH DISCONNECT SJ CHEROKEE, SJ WAGONEER, J10	Fig. 2-2500
DIFFERENTIAL, FRONT AXLE SJ CHEROKEE, SJ WAGONEER J10, J20	Fig. 2-2600
SHAFTS, FRONT AXLE WITHOUT DISCONNECT SJ CHEROKEE, SJ WAGONEER, J10, J20	Fig. 2-2700
SHAFTS, FRONT AXLE WITH DISCONNECT SJ CHEROKEE, SJ WAGONEER, J10	Fig. 2-2800

ILLUSTRATION TITLE **GROUP-FIG. NO.**

LOCKING HUBS

LOCKING HUB, SELECTIVE DRIVE WARN MODEL M-253 CJ-5,6,7,8, SCRAMBLER . . . . . Fig. 2-2900
LOCKING HUB, SELECTIVE DRIVE WARN MODEL M-75E SJ CHEROKEE, SJ WAGONEER, J10, J20 . . . . Fig. 2-3000
LOCKING HUB, SELECTIVE DRIVE WARN MODEL M-247 SJ CHEROKEE, SJ WAGONEER, J10, J20 . . . . Fig. 2-3100

BAR, FRONT STABILIZER CJ-5,6,7,8, SCRAMBLER
Figure 2-100

81J02 100

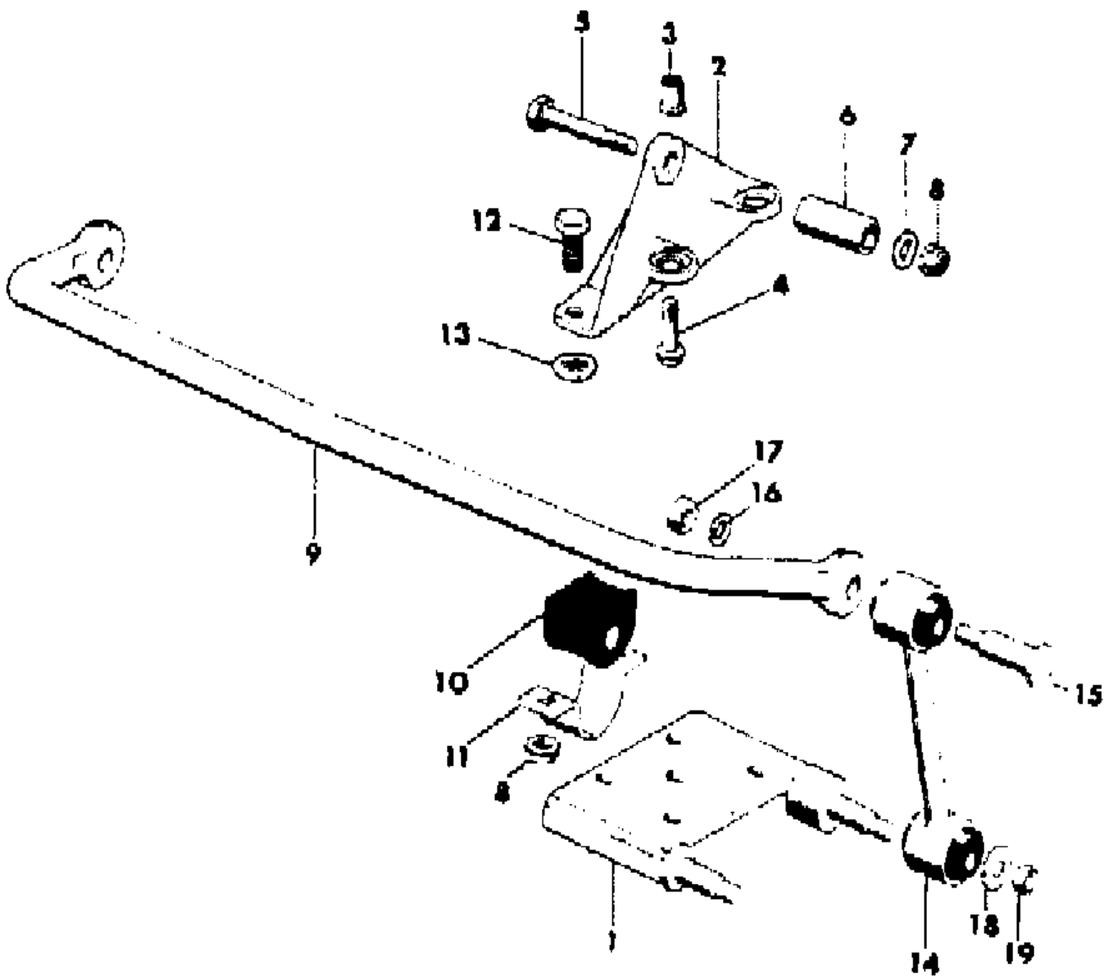

ITEM	PART NUMBER	QTY	BODY	MODEL	DESCRIPTION
1					BRACKET, Link
	J535 9012	1			Right
	J535 9011	1			Left
2					SUPPORT, Link Bracket
	J535 6921	1			Right
	J535 6920	1			Left
3	J400 5823	4			NUTSERT ***
4	J400 5822	4			BOLT
5	J999 7503	2			BOLT
6	J535 6958	2			SPACER
7	J400 5702	2			WASHER
8	J400 3956	6			NUT
9	J536 1651	1			STABILIZER ***
10	J536 1674	2			CUSHION
11	J535 2703	2			CLAMP
12	J018 0145	2			BOLT
13	J400 4175	2			PUSHNUT ***
14					LINK, Stabilizer Bar
					1981
	J535 5604	2			Used with Light Springs
	J535 5317	2			Used with Heavy Springs
					1982-86
	J536 4122	2			Used with Light Springs
	J536 4121	2			Used with Heavy Springs
15	J535 2787	2			PIN
16	J535 0644	2			WASHER
17	J942 1085	2			NUT
18	J941 5543	2			WASHER
19	J400 4311	2			PUSHNUT ***

MODEL CODES

16=Cherokee 2 Dr.(1981-83)
17=Cherokee 2 Dr.(1981-83)
73=Cherokee 2WD-2 Dr.(1984-86)
74=Cherokee 2WD-4 Dr.(1984-86)
18=Cherokee 4 Dr.(1981-83)
77=Cherokee 4WD-2 Dr.(1984-86)
78=Cherokee 4WD-4 Dr.(1984-86)
85=CJ-5 (1981-83)
86=CJ-6(1981)
87=CJ-7(1981-86)
88=CJ-8, Scrambler(1981-86)
64=Comanche 2WD-6 Ft. Box(1986)
66=Comanche 2WD-7 Ft. Box(1986)
63=Comanche 4WD-6 Ft. Box(1986)
65=Comanche 4WD-7 Ft. Box(1986)
15=Grand Wagoneer 4 Dr.(1984-86)
25=J-10 Truck 7 Ft. Box(1981-84)
26=J10 Truck 8 Ft. Box(1981-86)
27=J-20 Truck 8 Ft. Box(1981-86)
15=Wagoneer 4 Dr.(1981-83)
75=Wagoneer 4WD-4 Dr.(1984-86)

BODY
CJ=CJ-5, CJ-6, CJ-7, CJ-8, Scrambler(1981-86)
MJ=Comanche Pickup(1986)

STYLES
SJ=Wagoneer(1981-83), Grand Wagoneer(1984-86), Cherokee(1981-83), J-10, J-20(1981-86)
XJ=Wagoneer(1984-86), Cherokee(1984-86)

AR = Use as Required - = Non Illustrated Part P.A.R. = Paint as Required

« RETURN TO GROUP INDEX

BAR, FRONT STABILIZER XJ CHEROKEE, XJ WAGONEER COMANCHE
Figure 2-200

81J02 200

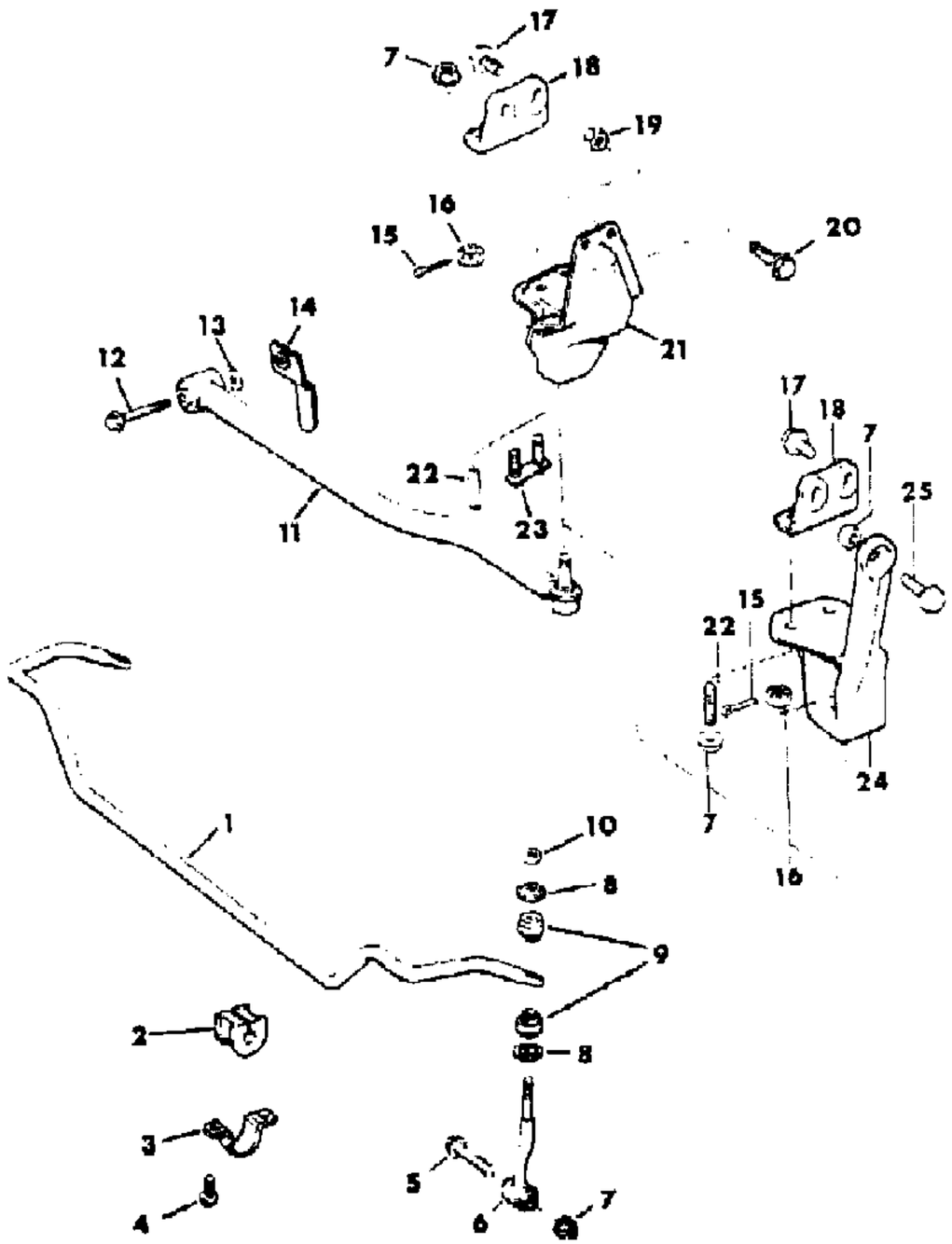

ITEM	PART NUMBER	QTY	BODY	MODEL	DESCRIPTION
1					STABILIZER BAR ***
	5200 1128	1			1984-85
	5200 1143	1			1986
2					CUSHION, Stabilizer
	5200 1185	2			Blue
	5200 1129	2			Green
	5200 1144	2			Orange
	J536 5098	2			Yellow
3	5200 1085	2			CLAMP
4	3420 1321	4			BOLT
5					BOLT
	1150 5098	2			1984-85
	3420 1949	2			1986
6	5200 1130	2			LINK
7	1150 2813	AR			NUT
8	5200 1131	4			RETAINER
9	5200 1132	4			GROMMET
10	1150 0424	2			NUT
11	5200 0609	1			BAR, Track
12	3420 1492	1			BOLT
13	S243 6163	1			WASHER
14	1150 1850	1			NUT
15	J010 3375	1			PIN
16	J027 4428	1			NUT
17	3420 2037	2			BOLT
18	5200 1275	1			REINFORCEMENT
19					NUT
	1150 1033	2			M10-1.5
	1150 2813	2			M12-1.75
20					BOLT
	1150 2606	2			M10-1.5x25
	3420 2472	2			M12-1.75x30
21	5200 0611	1			BRACKET, Track Bar
22	3420 2097	2			STUD
23	5200 1493	1			PLATE
24	5200 1407	1			BRACKET, Track Bar w/Diesel
25	3420 1964	1			BOLT

MODEL CODES

16=Cherokee 2 Dr.(1981-83)
17=Cherokee 2 Dr.(1981-83)
73=Cherokee 2WD-2 Dr.(1984-86)
74=Cherokee 2WD-4 Dr.(1984-86)
18=Cherokee 4 Dr.(1981-83)
77=Cherokee 4WD-2 Dr.(1984-86)
78=Cherokee 4WD-4 Dr.(1984-86)
85=CJ-5 (1981-83)
86=CJ-6(1981)
87=CJ-7(1981-86)
88=CJ-8, Scrambler(1981-86)
64=Comanche 2WD-6 Ft. Box(1986)
66=Comanche 2WD-7 Ft. Box(1986)
63=Comanche 4WD-6 Ft. Box(1986)
65=Comanche 4WD-7 Ft. Box(1986)
15=Grand Wagoneer 4 Dr.(1984-86)
25=J-10 Truck 7 Ft. Box(1981-84)
26=J10 Truck 8 Ft. Box(1981-86)
27=J-20 Truck 8 Ft. Box(1981-86)
15=Wagoneer 4 Dr.(1981-83)
75=Wagoneer 4WD-4 Dr.(1984-86)

BODY
CJ=CJ-5, CJ-6, CJ-7, CJ-8, Scrambler(1981-86)
MJ=Comanche Pickup(1986)

STYLES
SJ=Wagoneer(1981-83), Grand Wagoneer(1984-86), Cherokee(1981-83), J-10, J-20(1981-86)
XJ=Wagoneer(1984-86), Cherokee(1984-86)

AR = Use as Required - = Non Illustrated Part P.A.R. = Paint as Required

« RETURN TO GROUP INDEX

BAR, FRONT STABILIZER SJ CHEROKEE, SJ WAGONEER J10, J20
Figure 2-300

81J02 300

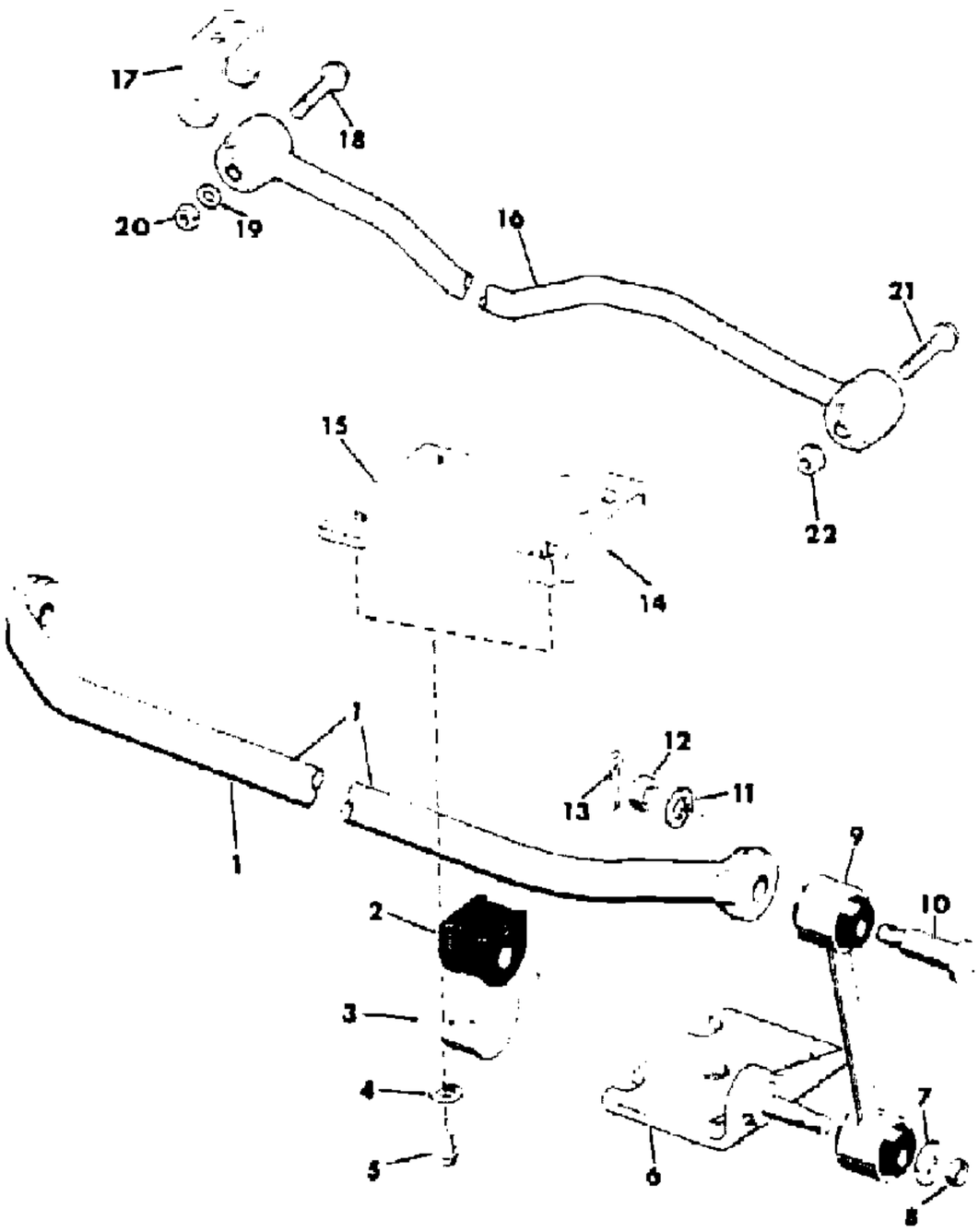

ITEM	PART NUMBER	QTY	BODY	MODEL	DESCRIPTION
1					STABILIZER BAR ***
	J535 5593	1		15,16,1	1981-84
	J535 5593	1		25,26	1981-84
	5200 1995	1		15,26	1985-86
	J535 2705	1		27	1981-86
2					CUSHION
	J535 5315	2		15,16,1	1981-84
	J535 5315	2		25,26	1981-84
	5200 1996	2		15,26	1985-86
	J535 2702	2		27	1981-86
3	J535 2703	2			CLAMP
4	J012 0383	4			WASHER
5					BOLT
	J027 4902	4		15,16,1	
	J027 4902	4		25,26	
	J400 5824	4		27	
6					BRACKET, Link
	J535 9585	1			Right
					Left
	J536 3864	1			With Disconnect Axle
	J535 9584	1			Without Disconnect Axle
7	J012 0389	4			WASHER
8	J027 4655	2			NUT
9					LINK, Stabilizer Bar
	J535 5594	1		15,16,1	
	J535 5594	1		25,26	
	J535 2788	1		27	
10	J535 2787	1			PIN
11	J535 0644	2			WASHER
12	J942 1085	2			NUT
13	J013 7190	2			PIN, Cotter
14					BRACKET
	J535 5597	1			Right
	J535 5596	1			Left
15	J099 4880	2			SPACER
16	5200 1985	1		15	BAR, Track
17	5200 1989	1		15	BRACKET
18	3420 1465	1		15	BOLT
19	J448 8495	1		15	WASHER

MODEL CODES

16=Cherokee 2 Dr.(1981-83)	78=Cherokee 4WD-4 Dr.(1984-86)	64=Comanche 2WD-6 Ft. Box(1986)	25=J-10 Truck 7 Ft. Box(1981-84)
17=Cherokee 2 Dr.(1981-83)	85=CJ-5 (1981-83)	66=Comanche 2WD-7 Ft. Box(1986)	26=J10 Truck 8 Ft. Box(1981-86)
73=Cherokee 2WD-2 Dr.(1984-86)	86=CJ-6(1981)	63=Comanche 4WD-6 Ft. Box(1986)	27=J-20 Truck 8 Ft. Box(1981-86)
74=Cherokee 2WD-4 Dr.(1984-86)	87=CJ-7(1981-86)	65=Comanche 4WD-7 Ft. Box(1986)	15=Wagoneer 4 Dr.(1981-83)
18=Cherokee 4 Dr.(1981-83)	88=CJ-8, Scrambler(1981-86)	15=Grand Wagoneer 4 Dr.(1984-86)	75=Wagoneer 4WD-4 Dr.(1984-86)
77=Cherokee 4WD-2 Dr.(1984-86)			

BODY
CJ=CJ-5, CJ-6, CJ-7, CJ-8, Scrambler(1981-86)
MJ=Comanche Pickup(1986)

STYLES
SJ=Wagoneer(1981-83), Grand Wagoneer(1984-86), Cherokee(1981-83), J-10, J-20(1981-86)
XJ=Wagoneer(1984-86), Cherokee(1984-86)

AR = Use as Required - = Non Illustrated Part P.A.R. = Paint as Required

BAR, FRONT STABILIZER SJ CHEROKEE, SJ WAGONEER J10, J20
Figure 2-300

81J02 300

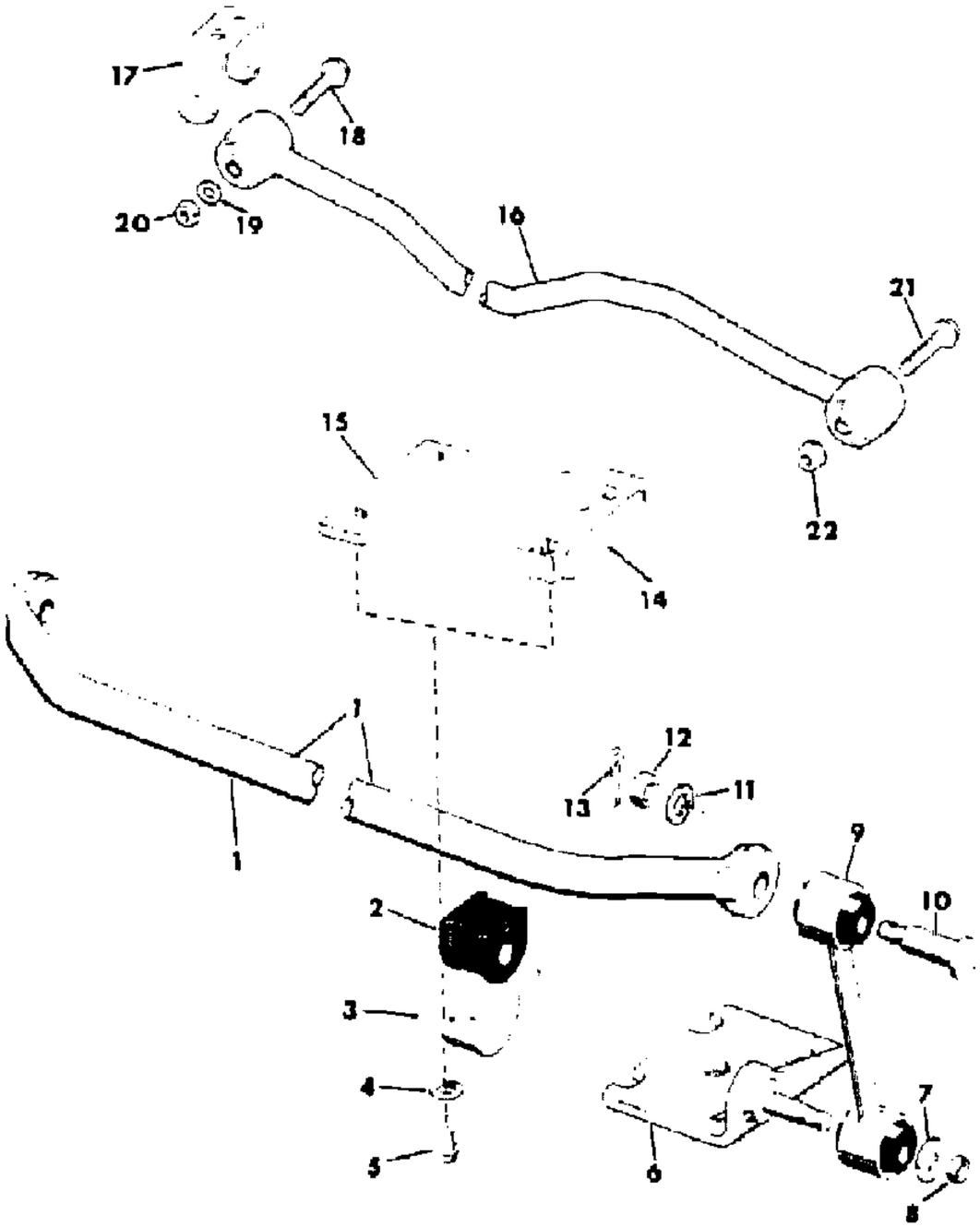

ITEM	PART NUMBER	QTY	BODY	MODEL	DESCRIPTION
20	1150 2723	1		15	NUT
21	1150 5068	1		15	BOLT
22	1150 2812	1		15	NUT

MODEL CODES

16=Cherokee 2 Dr.(1981-83)	78=Cherokee 4WD-4 Dr.(1984-86)	64=Comanche 2WD-6 Ft. Box(1986)	25=J-10 Truck 7 Ft. Box(1981-84)
17=Cherokee 2 Dr.(1981-83)	85=CJ-5 (1981-83)	66=Comanche 2WD-7 Ft. Box(1986)	26=J10 Truck 8 Ft. Box(1981-86)
73=Cherokee 2WD-2 Dr.(1984-86)	86=CJ-6(1981)	63=Comanche 4WD-6 Ft. Box(1986)	27=J-20 Truck 8 Ft. Box(1981-86)
74=Cherokee 2WD-4 Dr.(1984-86)	87=CJ-7(1981-86)	65=Comanche 4WD-7 Ft. Box(1986)	15=Wagoneer 4 Dr.(1981-83)
18=Cherokee 4 Dr.(1981-83)	88=CJ-8, Scrambler(1981-86)	15=Grand Wagoneer 4 Dr.(1984-86)	75=Wagoneer 4WD-4 Dr.(1984-86)
77=Cherokee 4WD-2 Dr.(1984-86)			

BODY
CJ=CJ-5, CJ-6, CJ-7, CJ-8, Scrambler(1981-86)
MJ=Comanche Pickup(1986)

STYLES
SJ=Wagoneer(1981-83), Grand Wagoneer(1984-86), Cherokee(1981-83), J-10, J-20(1981-86)
XJ=Wagoneer(1984-86), Cherokee(1984-86)

AR = Use as Required - = Non Illustrated Part P.A.R. = Paint as Required

« RETURN TO GROUP INDEX

FRONT SPRING ASSEMBLIES AND LEAVES CJ-5,6,7,8, SCRAMBLER
Figure 2-400

81J02 400

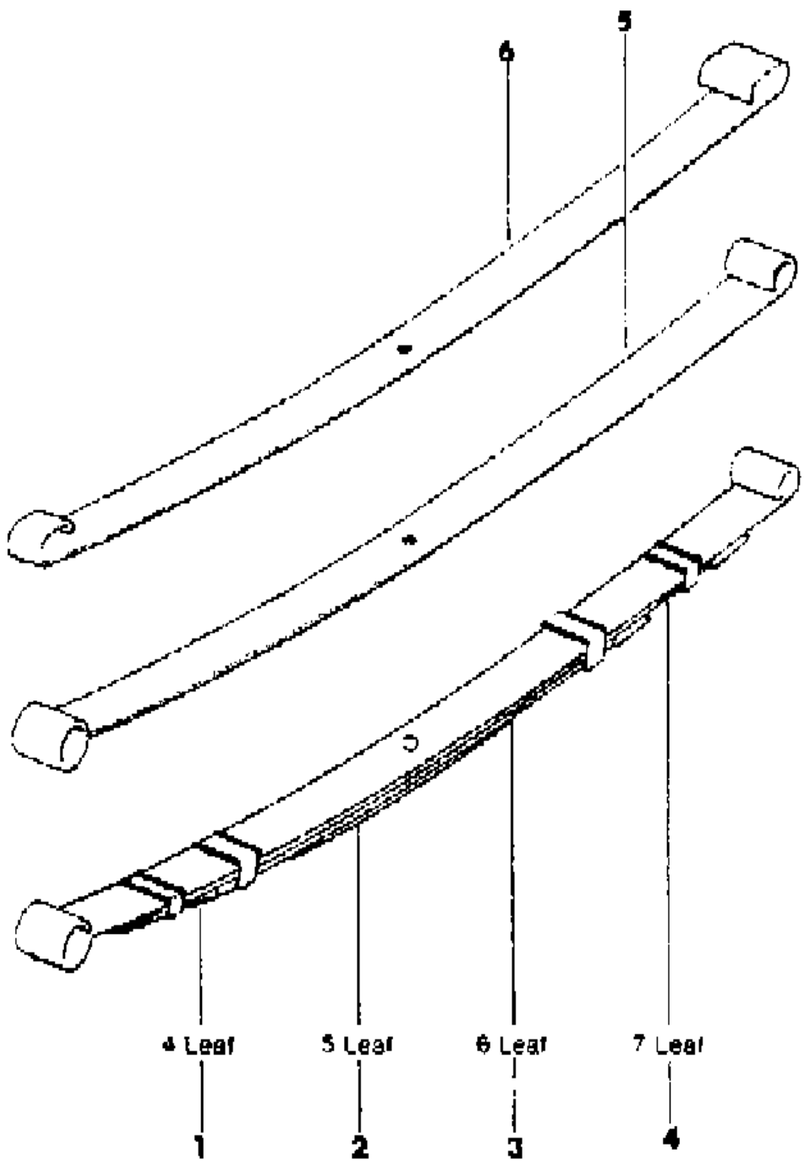

ITEM	PART NUMBER	QTY	BODY	MODEL	DESCRIPTION
1					SPRING ASSEMBLY, Four Leaf, Light Duty ***
					Four Cylinder Gas
	J536 1024	2		85,86,8	1981: Up to Vehicle Sequence 057506
	J536 3227	2		85	1981: After Vehicle Sequence 057506
	J536 3228	2		86,87,8	1981: After Vehicle Sequence 057506
	J536 3227	2		85	1982-86
	J536 3632	2		87	1982-86: Limited, Soft Ride
					Six Cylinder
	J535 4890	2		85,86,8	1981: Manual Transmission up to Vehicle Sequence 057506
	J536 3228	2		85	1981: After Vehicle Sequence 057506
	J536 3228	2		85	1982-86
	J536 3229	2		86,87,8	1981: After Vehicle 057506
	J536 3229	2		87,88	1982-86
	J536 3933	2		87	1982-86: Limited, Soft Ride
	J535 4890	2		87	1981: Automatic Transmission, without Hardtop, up to Vehicle Sequence 057506
	J535 5581	2		87	1981: Automatic Transmission, with Hardtop, up to Vehicle Sequence 057506
					Eight Cylinder
	J535 5581	2		85,86,8	1981: Up to Vehicle Sequence 057506
	J536 3229	2		85	1981: After Vehicle Sequence 057506
	J536 3230	2		87	1981: After Vehicle Sequence 057506
					Diesel
	J535 5581	2		85,87,8	1981: EXPORT, Up to Vehicle Sequence 057506
	J536 3228	2		85	1981: EXPORT, After Vehicle Sequence 057506
	J536 3229	2		86,87,8	1981: EXPORT, After Vehicle Sequence 057506
	J536 3228	2		85	1982-86: EXPORT
					SPRING ASSEMBLY, Four Leaf, Heavy Duty ***
					Diesel
	J536 3229	2		87,88	1982-86: EXPORT
2					SPRING ASSEMBLY, Five Leaf, Heavy Duty ***
					Four Cylinder
	J536 3297	2		85	1981: After Vehicle Sequence 057506
	J536 3851	2		85	1982-86
	J536 3298	2		86,87,8	1981: After Vehicle Sequence 057506
	J536 3852	2		87,88	1982-86
					Six Cylinder
	J536 3298	2		85	1981: After Vehicle Sequence 057506
	J536 3852	2		85	1982-86

MODEL CODES

16=Cherokee 2 Dr.(1981-83)
17=Cherokee 2 Dr.(1981-83)
73=Cherokee 2WD-2 Dr.(1984-86)
74=Cherokee 2WD-4 Dr.(1984-86)
18=Cherokee 4 Dr.(1981-83)
77=Cherokee 4WD-2 Dr.(1984-86)
78=Cherokee 4WD-4 Dr.(1984-86)
85=CJ-5 (1981-83)
86=CJ-6(1981)
87=CJ-7(1981-86)
88=CJ-8, Scrambler(1981-86)
64=Comanche 2WD-6 Ft. Box(1986)
66=Comanche 2WD-7 Ft. Box(1986)
63=Comanche 4WD-6 Ft. Box(1986)
65=Comanche 4WD-7 Ft. Box(1986)
15=Grand Wagoneer 4 Dr.(1984-86)
25=J-10 Truck 7 Ft. Box(1981-84)
26=J10 Truck 8 Ft. Box(1981-86)
27=J-20 Truck 8 Ft. Box(1981-86)
15=Wagoneer 4 Dr.(1981-83)
75=Wagoneer 4WD-4 Dr.(1984-86)

BODY
CJ=CJ-5, CJ-6, CJ-7, CJ-8, Scrambler(1981-86)
MJ=Comanche Pickup(1986)

STYLES
SJ=Wagoneer(1981-83), Grand Wagoneer(1984-86), Cherokee(1981-83), J-10, J-20(1981-86)
XJ=Wagoneer(1984-86), Cherokee(1984-86)

AR = Use as Required - = Non Illustrated Part P.A.R. = Paint as Required

81J02 400

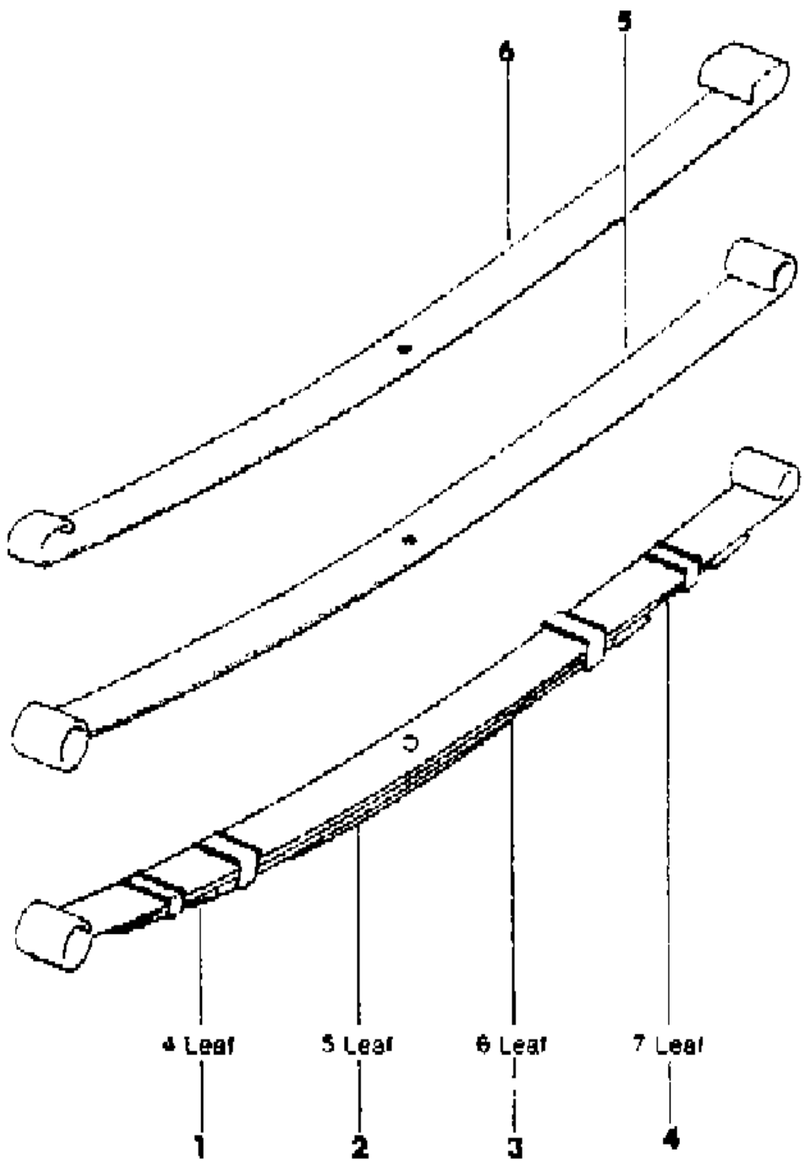

ITEM	PART NUMBER	QTY	BODY	MODEL	DESCRIPTION
					Diesel
	J536 3298	2		85,86,8	1981: EXPORT, After Vehicle Sequence 057506
3					SPRING ASSEMBLY, Six Leaf, Heavy Duty ***
					Four Cylinder
	J536 1275	2		85,86,8	1981: Up to Vehicle Sequence 057506
	J536 4385	2		85,86,8	1982-86
					Six or Eight Cylinder
	J535 8939	2		85,86,8	1981: Up to Vehicle Sequence 057506
	J536 3226	2		85,86,8	1981: After Vehicle Sequence 057506
	J536 4385	2		85	1982-86
	J536 3850	2		87,88	1982-86
					Diesel
	J536 3226	2		85,86,8	1981: EXPORT, After Vehicle Sequence 057506
4					SPRING ASSEMBLY, Seven Leaf, Heavy Duty ***
					Diesel
	J535 4892	2		85,86,8	1981: EXPORT
	J536 4230	2		85,87,8	1982-86: EXPORT
	J536 4230	2		87,88	1983-86: EXPORT, Severe Use
5					SPRING, Front Leaf No. 1, with Five Leaf Assembly
					Four Cylinder
	J813 4742	2		85	1981: After Vehicle Sequence 057506
	J813 4752	2		85	1982-86
	J813 4751	2		86,87,8	1981: After Vehicle Sequence 057506
	J813 4421	2		87,88	1982-86
					Six Cylinder
	J813 4751	2		85	1981: After Vehicle Sequence 057506
	J813 4421	2		85	1982-86
					Diesel
	J813 4751	2		85,86,8	1981: EXPORT, After Vehicle Sequence 057506
					SPRING, Front Leaf No. 1, with Six Leaf Assembly
					Four Cylinder
	J813 4751	2		85,86,8	1981: Up to Vehicle Sequence 057506
	J813 4421	2		85,86,8	1982-86
					Six or Eight Cylinder
	J813 4751	2		85,86,8	1981: Up to Vehicle Sequence 057506
	J813 4741	2		85,86,8	1981: After Vehicle Sequence 057506
	J813 4421	2		85	1982-86
	J813 4751	2		87,88	1982-86
					Diesel

MODEL CODES

16=Cherokee 2 Dr.(1981-83)
17=Cherokee 2 Dr.(1981-83)
73=Cherokee 2WD-2 Dr.(1984-86)
74=Cherokee 2WD-4 Dr.(1984-86)
18=Cherokee 4 Dr.(1981-83)
77=Cherokee 4WD-2 Dr.(1984-86)
78=Cherokee 4WD-4 Dr.(1984-86)
85=CJ-5 (1981-83)
86=CJ-6(1981)
87=CJ-7(1981-86)
88=CJ-8, Scrambler(1981-86)
64=Comanche 2WD-6 Ft. Box(1986)
66=Comanche 2WD-7 Ft. Box(1986)
63=Comanche 4WD-6 Ft. Box(1986)
65=Comanche 4WD-7 Ft. Box(1986)
15=Grand Wagoneer 4 Dr.(1984-86)
25=J-10 Truck 7 Ft. Box(1981-84)
26=J10 Truck 8 Ft. Box(1981-86)
27=J-20 Truck 8 Ft. Box(1981-86)
15=Wagoneer 4 Dr.(1981-83)
75=Wagoneer 4WD-4 Dr.(1984-86)

BODY
CJ=CJ-5, CJ-6, CJ-7, CJ-8, Scrambler(1981-86)
MJ=Comanche Pickup(1986)

STYLES
SJ=Wagoneer(1981-83), Grand Wagoneer(1984-86), Cherokee(1981-83), J-10, J-20(1981-86)
XJ=Wagoneer(1984-86), Cherokee(1984-86)

AR = Use as Required - = Non Illustrated Part P.A.R. = Paint as Required

FRONT SPRING ASSEMBLIES AND LEAVES CJ-5,6,7,8, SCRAMBLER
Figure 2-400

81J02 400

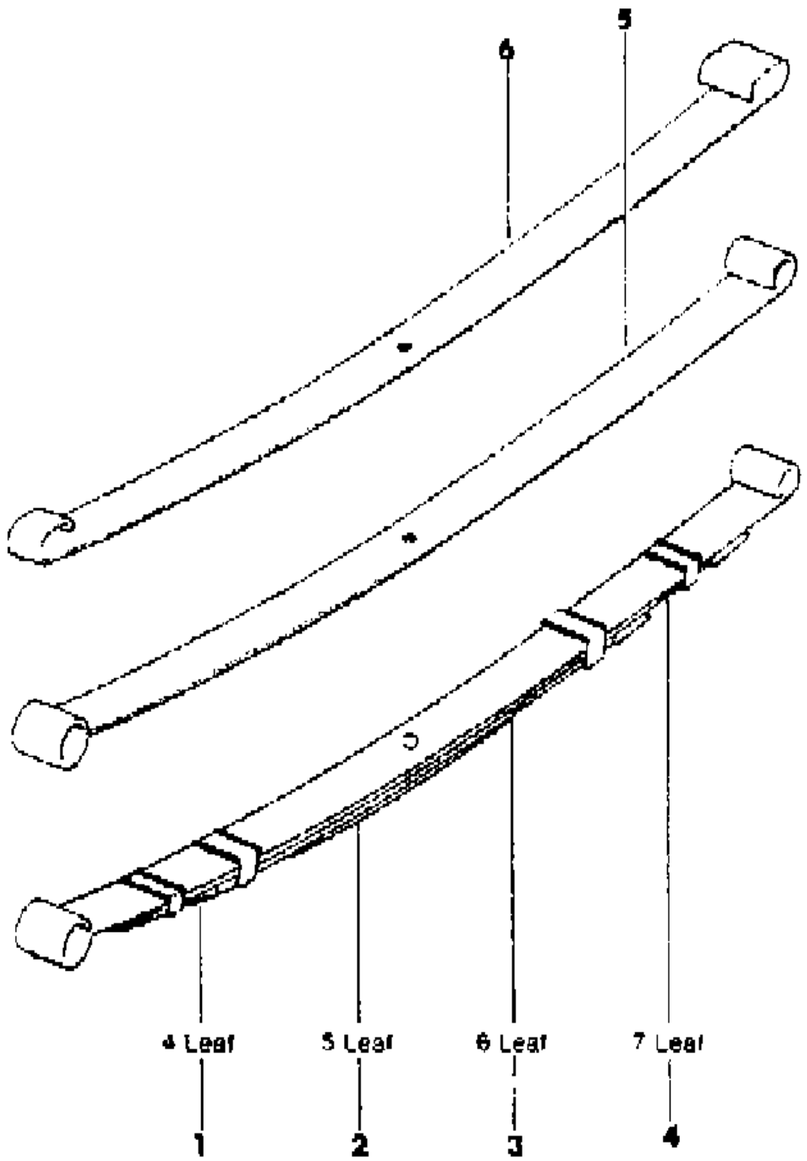

ITEM	PART NUMBER	QTY	BODY	MODEL	DESCRIPTION
	J813 4741	2		85,86,8	1981: EXPORT, After Vehicle Sequence 057506
					SPRING, Front Leaf, No. 1, with Seven Leaf Assembly
	J813 4351	2		85,86,8	1981-86: Diesel, EXPORT
	J813 4351	2		87,88	1983-86: EXPORT, Severe Use
6					SPRING, Front Leaf, No. 2, with Seven Leaf Assembly
	J813 4352	2		85,86,8	1981: Diesel, EXPORT ***
	J813 4352	2		85,87,8	1982-86: EXPORT
	J813 4352	2		87,88	1983-86: EXPORT, Severe Use

MODEL CODES

16=Cherokee 2 Dr.(1981-83)
17=Cherokee 2 Dr.(1981-83)
73=Cherokee 2WD-2 Dr.(1984-86)
74=Cherokee 2WD-4 Dr.(1984-86)
18=Cherokee 4 Dr.(1981-83)
77=Cherokee 4WD-2 Dr.(1984-86)
78=Cherokee 4WD-4 Dr.(1984-86)
85=CJ-5 (1981-83)
86=CJ-6(1981)
87=CJ-7(1981-86)
88=CJ-8, Scrambler(1981-86)
64=Comanche 2WD-6 Ft. Box(1986)
66=Comanche 2WD-7 Ft. Box(1986)
63=Comanche 4WD-6 Ft. Box(1986)
65=Comanche 4WD-7 Ft. Box(1986)
15=Grand Wagoneer 4 Dr.(1984-86)
25=J-10 Truck 7 Ft. Box(1981-84)
26=J10 Truck 8 Ft. Box(1981-86)
27=J-20 Truck 8 Ft. Box(1981-86)
15=Wagoneer 4 Dr.(1981-83)
75=Wagoneer 4WD-4 Dr.(1984-86)

BODY
CJ=CJ-5, CJ-6, CJ-7, CJ-8, Scrambler(1981-86)
MJ=Comanche Pickup(1986)

STYLES
SJ=Wagoneer(1981-83), Grand Wagoneer(1984-86), Cherokee(1981-83), J-10, J-20(1981-86)
XJ=Wagoneer(1984-86), Cherokee(1984-86)

AR = Use as Required - = Non Illustrated Part P.A.R. = Paint as Required

FRONT SPRING COMPONENTS AND SHOCK ABSORBERS CJ-5,6,7,8, SCRAMBLER
Figure 2-500

81J02 500

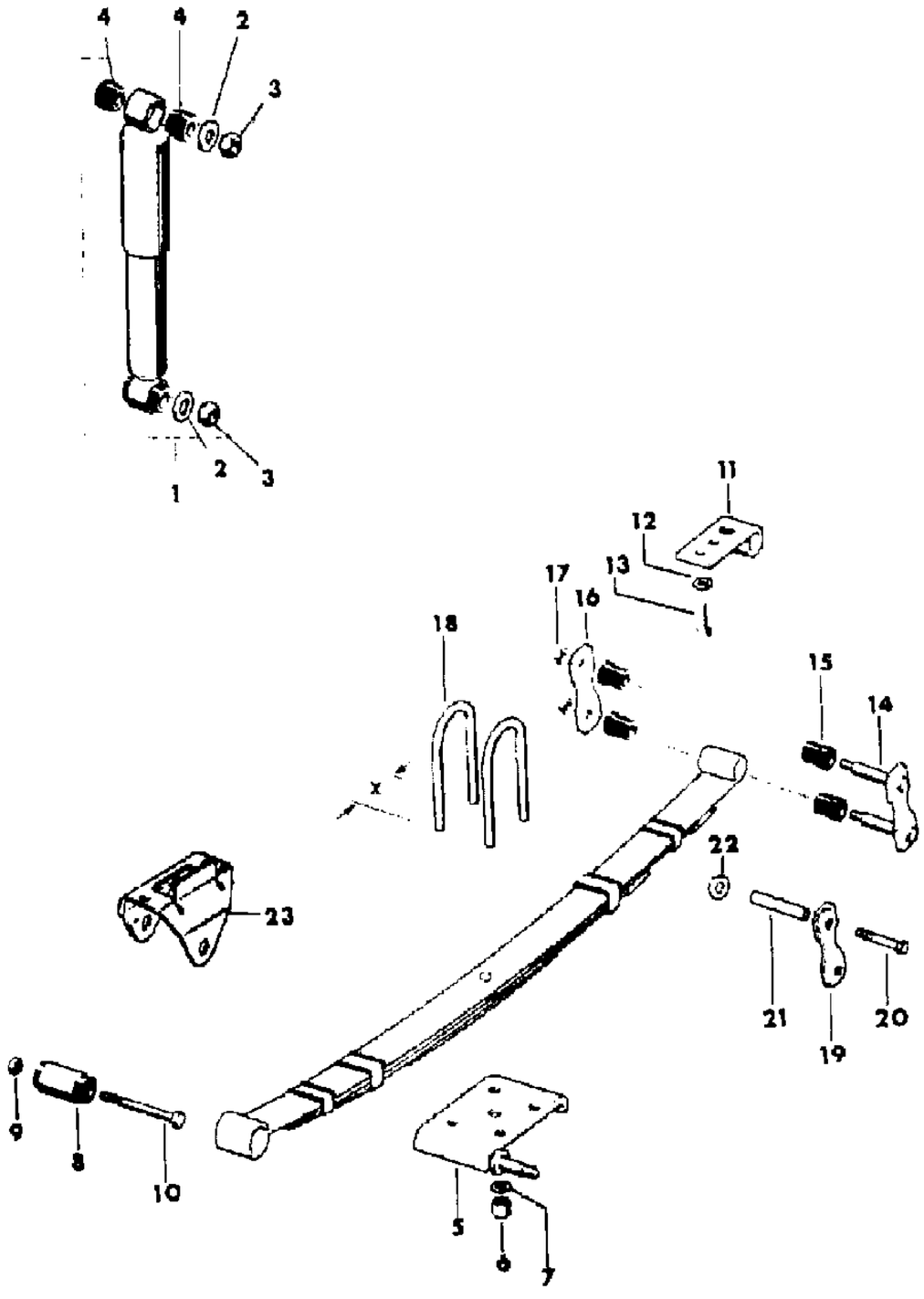

ITEM	PART NUMBER	QTY	BODY	MODEL	DESCRIPTION
1					SHOCK ABSORBER
					1981
	J813 3289	2			Standard Duty
	J813 3290	2			Heavy Duty, EXPORT
					1982-86
	J813 4102	2			Limited, Soft Ride
	J813 4100	2			Standard Duty
	J813 4101	2			Heavy Duty, EXPORT
	8350 0176	2			Severe Use
2	J448 8495	4			WASHER
3	J400 4311	4			NUT
4	J063 7936	4			BUSHING
5					PLATE
					1981
	J535 9012	1			Right
	J535 9011	1			Left
					1982-86
	J536 4022	1			Right
	J536 4021	1			Left
6	J942 1085	8			NUT
7	J535 0644	8			WASHER
8	J535 3851	2			BUSHING
9	J400 3979	4			NUT
10	S941 9209	2			BOLT
11	J535 5689	2			BRACKET
12	J018 0147	4			WASHER
13	J400 4809	4			BOLT
14					SHACKLE
	J535 7620	2			1981
15	J535 5966	8			BUSHING
16					PLATE
	J535 7497	2			1981
17					NUT, Lock
	S941 6532	4			1981
18					U-BOLT ***
	J813 0369	4			3.06" Wide
	J813 0370	4			3.75" Wide
19					PLATE
	J536 4404	4			1982-86

MODEL CODES

16=Cherokee 2 Dr.(1981-83)
17=Cherokee 2 Dr.(1981-83)
73=Cherokee 2WD-2 Dr.(1984-86)
74=Cherokee 2WD-4 Dr.(1984-86)
18=Cherokee 4 Dr.(1981-83)
77=Cherokee 4WD-2 Dr.(1984-86)
78=Cherokee 4WD-4 Dr.(1984-86)
85=CJ-5 (1981-83)
86=CJ-6(1981)
87=CJ-7(1981-86)
88=CJ-8, Scrambler(1981-86)
64=Comanche 2WD-6 Ft. Box(1986)
66=Comanche 2WD-7 Ft. Box(1986)
63=Comanche 4WD-6 Ft. Box(1986)
65=Comanche 4WD-7 Ft. Box(1986)
15=Grand Wagoneer 4 Dr.(1984-86)
25=J-10 Truck 7 Ft. Box(1981-84)
26=J10 Truck 8 Ft. Box(1981-86)
27=J-20 Truck 8 Ft. Box(1981-86)
15=Wagoneer 4 Dr.(1981-83)
75=Wagoneer 4WD-4 Dr.(1984-86)

BODY
CJ=CJ-5, CJ-6, CJ-7, CJ-8, Scrambler(1981-86)
MJ=Comanche Pickup(1986)

STYLES
SJ=Wagoneer(1981-83), Grand Wagoneer(1984-86), Cherokee(1981-83), J-10, J-20(1981-86)
XJ=Wagoneer(1984-86), Cherokee(1984-86)

AR = Use as Required - = Non Illustrated Part P.A.R. = Paint as Required

« RETURN TO GROUP INDEX »

FRONT SPRING COMPONENTS AND SHOCK ABSORBERS CJ-5,6,7,8, SCRAMBLER
Figure 2-500

81J02 500

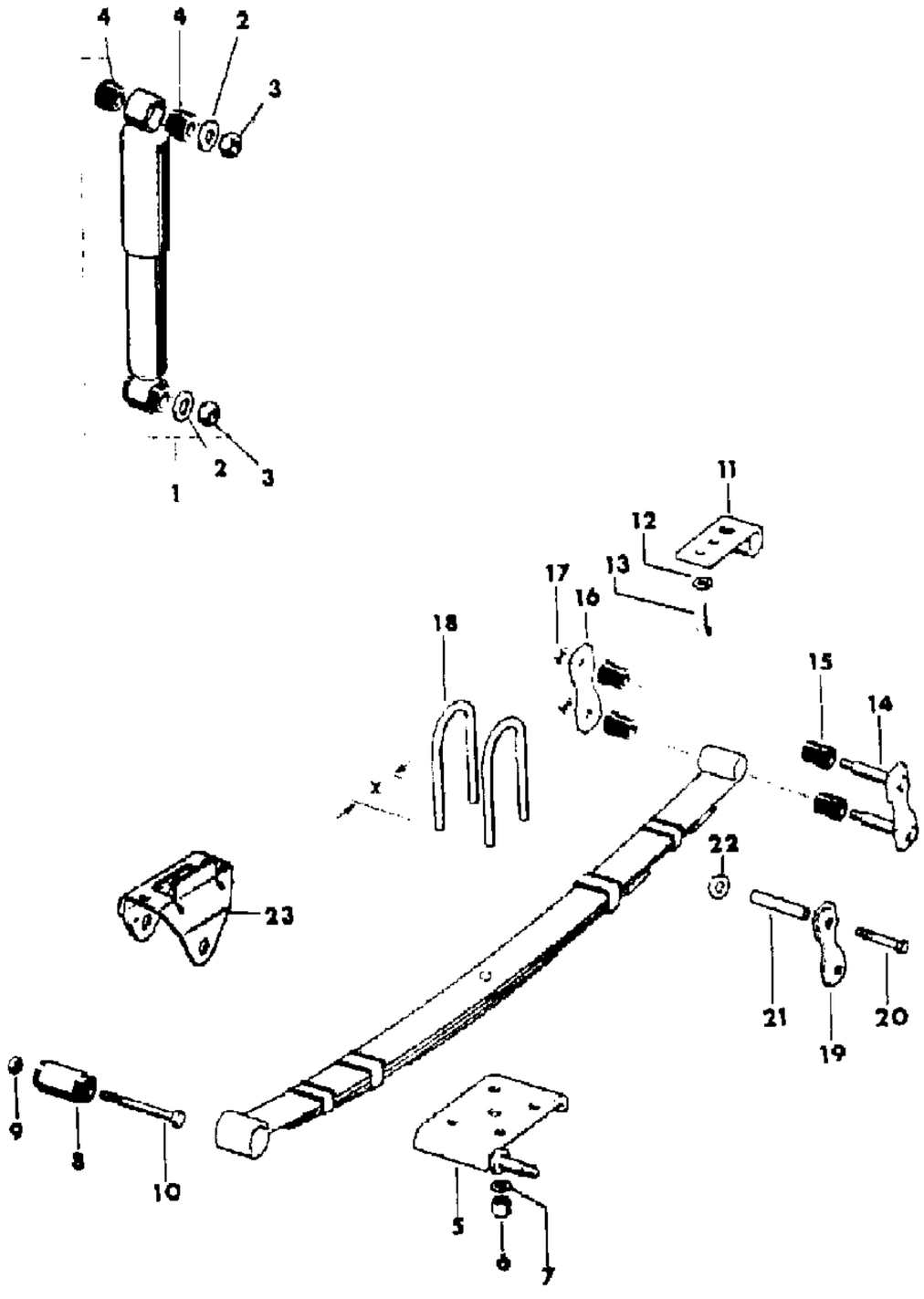

ITEM	PART NUMBER	QTY	BODY	MODEL	DESCRIPTION
20					BOLT
	S941 8072	4			1982-86
21					TUBE
	J536 4405	4			1982-86
22					NUT
	S941 3266	4			1982-86
23					BRACKET, Front Spring Mounting
	J535 5689	2			Front
	J812 7712	2			Rear

MODEL CODES

16=Cherokee 2 Dr.(1981-83)
17=Cherokee 2 Dr.(1981-83)
73=Cherokee 2WD-2 Dr.(1984-86)
74=Cherokee 2WD-4 Dr.(1984-86)
18=Cherokee 4 Dr.(1981-83)
77=Cherokee 4WD-2 Dr.(1984-86)
78=Cherokee 4WD-4 Dr.(1984-86)
85=CJ-5 (1981-83)
86=CJ-6(1981)
87=CJ-7(1981-86)
88=CJ-8, Scrambler(1981-86)
64=Comanche 2WD-6 Ft. Box(1986)
66=Comanche 2WD-7 Ft. Box(1986)
63=Comanche 4WD-6 Ft. Box(1986)
65=Comanche 4WD-7 Ft. Box(1986)
15=Grand Wagoneer 4 Dr.(1984-86)
25=J-10 Truck 7 Ft. Box(1981-84)
26=J10 Truck 8 Ft. Box(1981-86)
27=J-20 Truck 8 Ft. Box(1981-86)
15=Wagoneer 4 Dr.(1981-83)
75=Wagoneer 4WD-4 Dr.(1984-86)

BODY
CJ=CJ-5, CJ-6, CJ-7, CJ-8, Scrambler(1981-86)
MJ=Comanche Pickup(1986)

STYLES
SJ=Wagoneer(1981-83), Grand Wagoneer(1984-86), Cherokee(1981-83), J-10, J-20(1981-86)
XJ=Wagoneer(1984-86), Cherokee(1984-86)

AR = Use as Required - = Non Illustrated Part P.A.R. = Paint as Required

FRONT SPRING AND SHOCK ABSORBER XJ CHEROKEE, XJ WAGONEER COMANCHE
Figure 2-600

81J02 600

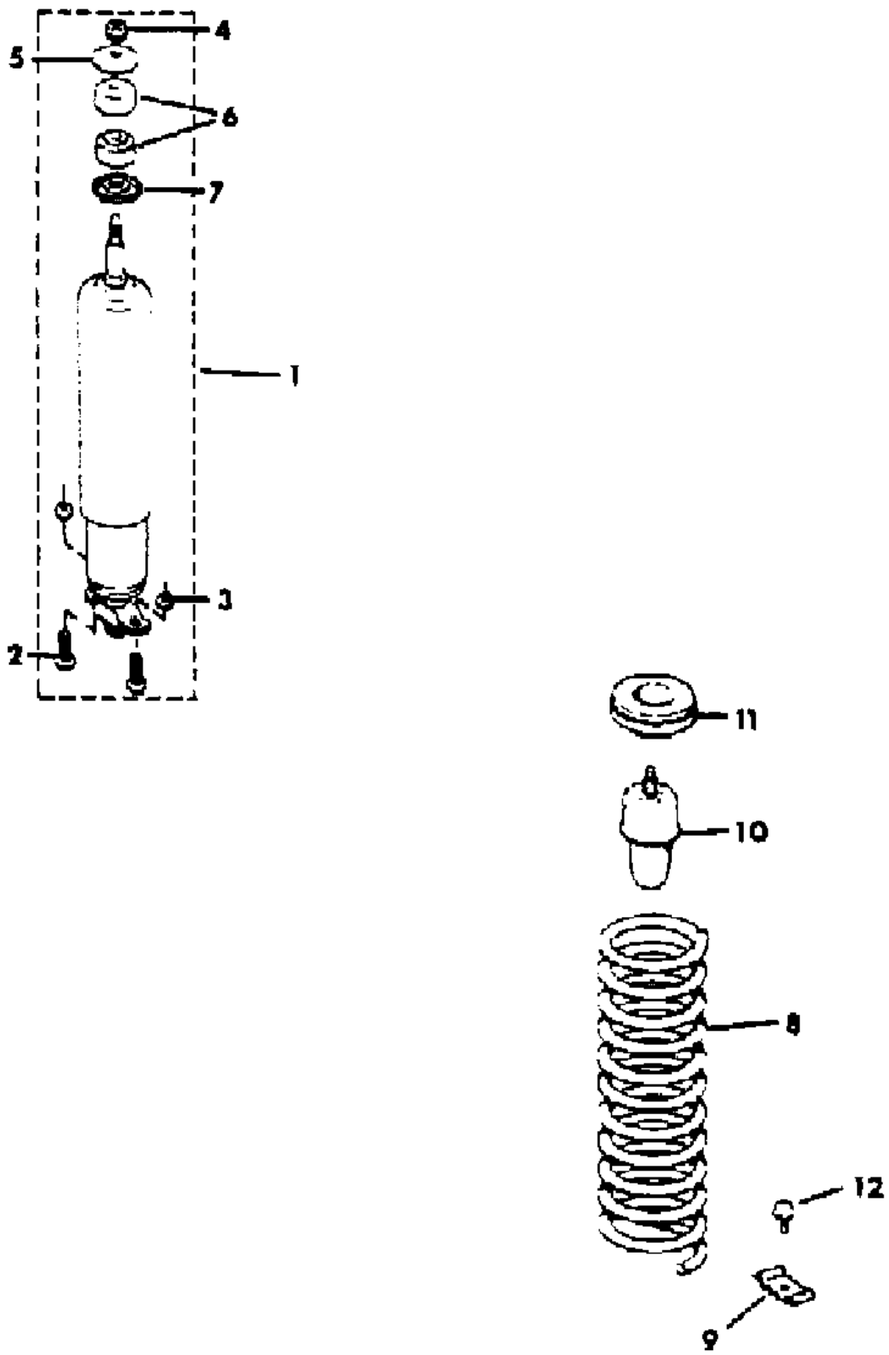

ITEM	PART NUMBER	QTY	BODY	MODEL	DESCRIPTION
1					SHOCK ABSORBER
	8350 0313	2	XJ		Light Duty, Stamped 8952001209
	8350 0312	2	XJ		Standard Duty, Stamped 8952001207
	8350 0314	2	XJ		Heavy Duty, Stamped 8952001208
	8350 2509	2	MJ		Standard Duty, Stamped 8952000949
	8350 2510	2	MJ		Heavy Duty, Stamped 8952000814
	8350 2511	2			Heavy Duty, Off Road, Stamped 8952002388
	8350 4211	2			Heavy Duty, Off Road, Stamped 8952003288
2	J420 0402	4			BOLT
3	1150 2811	4			NUT
4	J012 0369	2			NUT
5	J316 5076	2			RETAINER
6	J321 6638	4			GROMMET
7	J314 6809	2			RETAINER
8					SPRING, Front Coil
					Light Duty
	5200 1104	2			Tagged EC
	5200 1105	2			Tagged ED
	5200 1106	2			Tagged EE
	5200 1107	2			Tagged EF
	5200 1108	2			Tagged EG
	5200 1109	2			Tagged EH
	5200 1110	2			Tagged EJ
	5200 1111	2			Tagged EK
	5200 1784	2			Tagged EL
	5200 1785	2			Tagged EM
	5200 1786	2			Tagged EN
	5200 1787	2			Tagged EP
	5200 1788	2			Tagged ER
					Standard Duty
	5200 1112	2			Tagged FC
	5200 1113	2			Tagged FD
	5200 1114	2			Tagged FE
	5200 1115	2			Tagged FF
	5200 1116	2			Tagged FG
	5200 1117	2			Tagged FH
	5200 1118	2			Tagged FJ
	5200 1119	2			Tagged FK
	5200 1789	2			Tagged FL

MODEL CODES

16=Cherokee 2 Dr.(1981-83)
17=Cherokee 2 Dr.(1981-83)
73=Cherokee 2WD-2 Dr.(1984-86)
74=Cherokee 2WD-4 Dr.(1984-86)
18=Cherokee 4 Dr.(1981-83)
77=Cherokee 4WD-2 Dr.(1984-86)
78=Cherokee 4WD-4 Dr.(1984-86)
85=CJ-5 (1981-83)
86=CJ-6(1981)
87=CJ-7(1981-86)
88=CJ-8, Scrambler(1981-86)
64=Comanche 2WD-6 Ft. Box(1986)
66=Comanche 2WD-7 Ft. Box(1986)
63=Comanche 4WD-6 Ft. Box(1986)
65=Comanche 4WD-7 Ft. Box(1986)
15=Grand Wagoneer 4 Dr.(1984-86)
25=J-10 Truck 7 Ft. Box(1981-84)
26=J10 Truck 8 Ft. Box(1981-86)
27=J-20 Truck 8 Ft. Box(1981-86)
15=Wagoneer 4 Dr.(1981-83)
75=Wagoneer 4WD-4 Dr.(1984-86)

BODY
CJ=CJ-5, CJ-6, CJ-7, CJ-8, Scrambler(1981-86)
MJ=Comanche Pickup(1986)

STYLES
SJ=Wagoneer(1981-83), Grand Wagoneer(1984-86), Cherokee(1981-83), J-10, J-20(1981-86)
XJ=Wagoneer(1984-86), Cherokee(1984-86)

AR = Use as Required - = Non Illustrated Part P.A.R. = Paint as Required

FRONT SPRING AND SHOCK ABSORBER XJ CHEROKEE, XJ WAGONEER COMANCHE
Figure 2-600

81J02 600

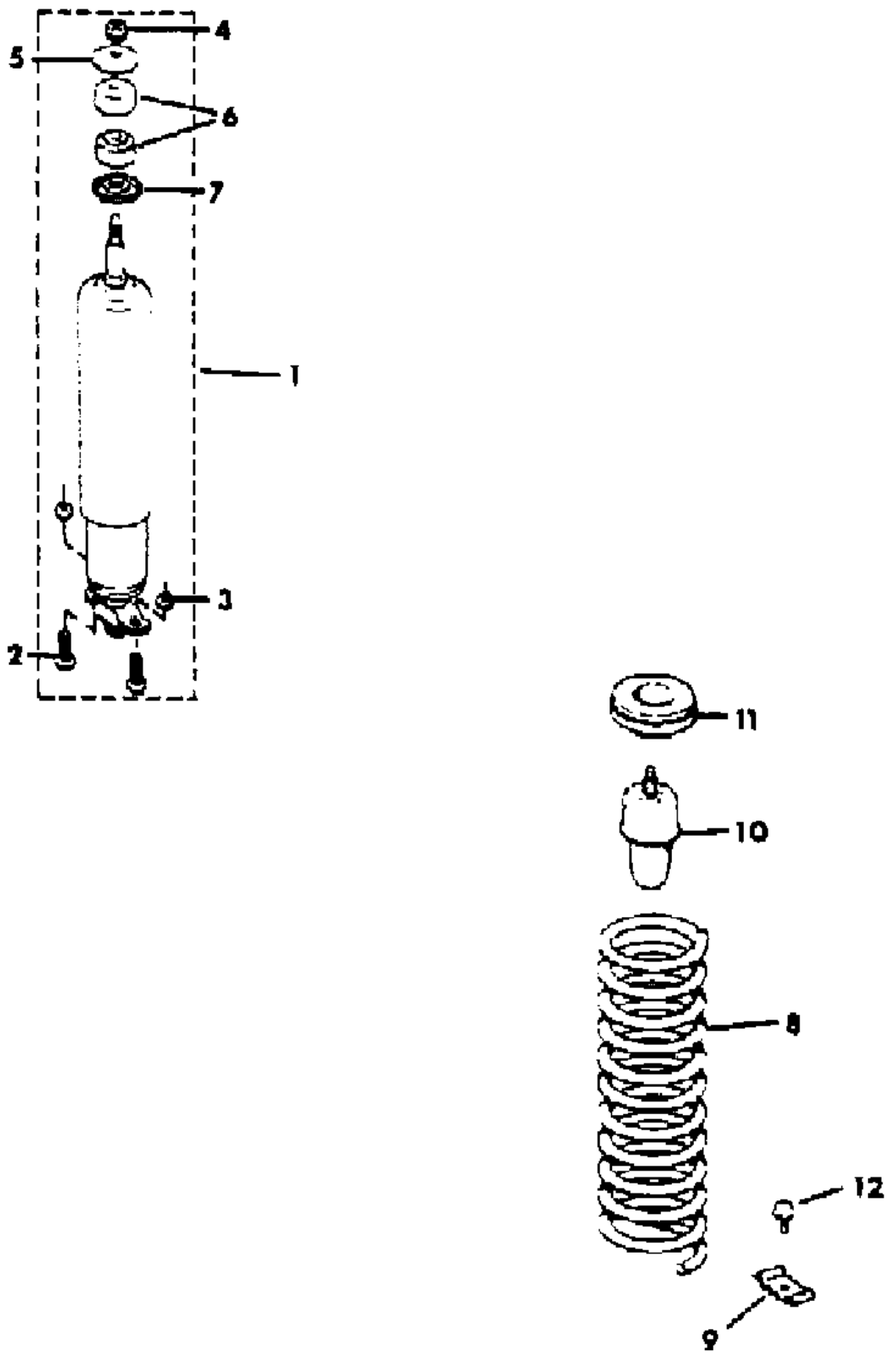

ITEM	PART NUMBER	QTY	BODY	MODEL	DESCRIPTION
	5200 1790	2			Tagged FM
	5200 1791	2			Tagged FN
	5200 1792	2			Tagged FP
					Heavy Duty
	5200 1120	2			Tagged GD
	5200 1121	2			Tagged GE
	5200 1122	2			Tagged GF
	5200 1123	2			Tagged GG
	5200 1124	2			Tagged GH
	5200 1125	2			Tagged GJ
	5200 1793	2			Tagged GK
	5200 1794	2			Tagged GL
	5200 1795	2			Tagged GM
	5200 1796	2			Tagged GN
9	5300 0899	2			BRACKET
10					CUSHION
	5200 0230	2			1984-85
					1986
	5200 2732	2			80mm High
	5200 2387	2			106mm High
11	5200 0229	2			ISOLATOR
12	S150 0086	2			SCREW

MODEL CODES

16=Cherokee 2 Dr.(1981-83)	78=Cherokee 4WD-4 Dr.(1984-86)	64=Comanche 2WD-6 Ft. Box(1986)	25=J-10 Truck 7 Ft. Box(1981-84)
17=Cherokee 2 Dr.(1981-83)	85=CJ-5 (1981-83)	66=Comanche 2WD-7 Ft. Box(1986)	26=J10 Truck 8 Ft. Box(1981-86)
73=Cherokee 2WD-2 Dr.(1984-86)	86=CJ-6(1981)	63=Comanche 4WD-6 Ft. Box(1986)	27=J-20 Truck 8 Ft. Box(1981-86)
74=Cherokee 2WD-4 Dr.(1984-86)	87=CJ-7(1981-86)	65=Comanche 4WD-7 Ft. Box(1986)	15=Wagoneer 4 Dr.(1981-83)
18=Cherokee 4 Dr.(1981-83)	88=CJ-8, Scrambler(1981-86)	15=Grand Wagoneer 4 Dr.(1984-86)	75=Wagoneer 4WD-4 Dr.(1984-86)
77=Cherokee 4WD-2 Dr.(1984-86)			

BODY
CJ=CJ-5, CJ-6, CJ-7, CJ-8, Scrambler(1981-86)
MJ=Comanche Pickup(1986)

STYLES
SJ=Wagoneer(1981-83), Grand Wagoneer(1984-86), Cherokee(1981-83), J-10, J-20(1981-86)
XJ=Wagoneer(1984-86), Cherokee(1984-86)

AR = Use as Required - = Non Illustrated Part P.A.R. = Paint as Required

« RETURN TO GROUP INDEX

FRONT SUSPENSION ARMS XJ CHEROKEE, XJ WAGONEER COMANCHE
Figure 2-700

81J02 700

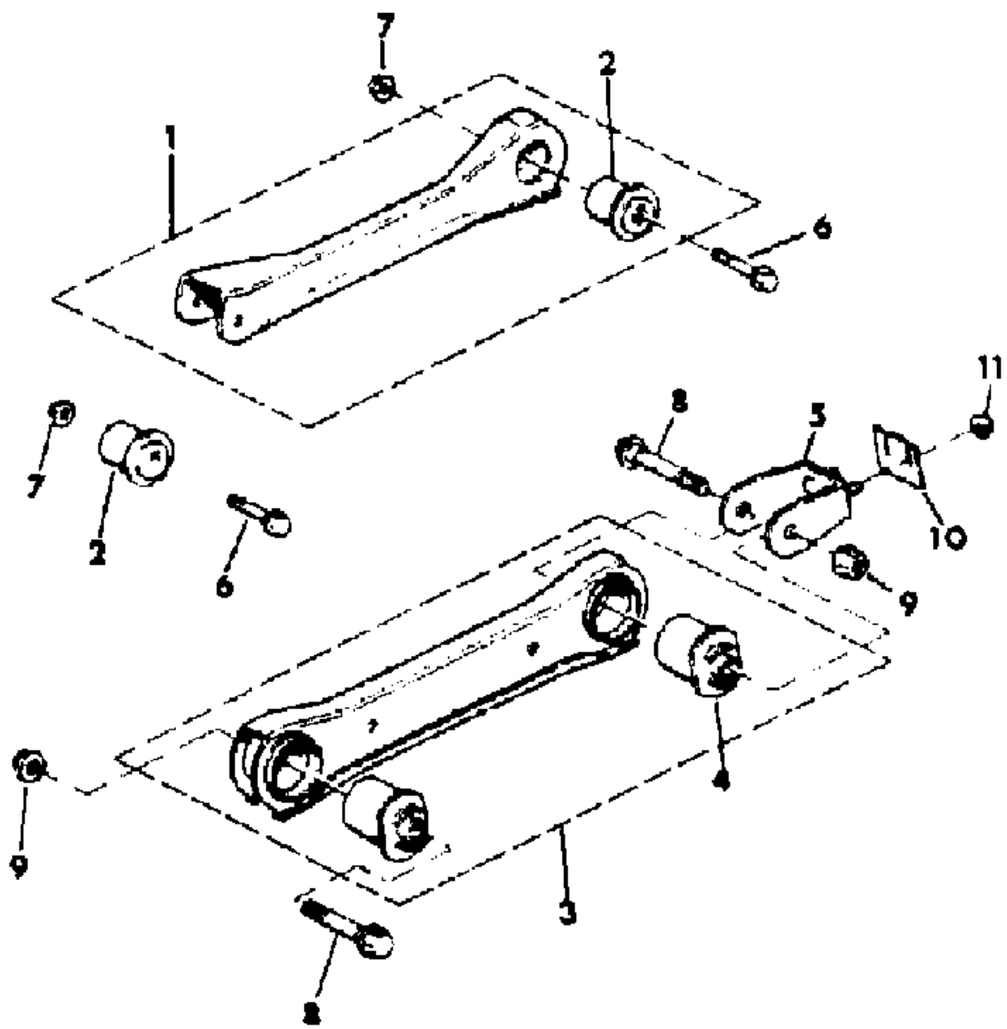

ITEM	PART NUMBER	QTY	BODY	MODEL	DESCRIPTION
1					ARM, Suspension, Upper
	5200 0213	2			
	5200 2535	2			Economic Commission of Europe
2					BUSHING, Upper Arm
	5200 0211	4			
	5200 2536	4			Economic Commssion of Europe
3					ARM, Suspension, Lower
	5200 1162	2			
	5200 2538	2			Economic Commission of Europe
4					BUSHING, Lower Arm
	5200 1161	4			
	5200 2539	4			Economic Commission of Europe
5	5200 0532	2			CLEVIS ***
6	3420 1492	4			BOLT
7	1150 6007	4			NUT
8	3420 1334	4			BOLT
9	1150 2814	4			NUT
10	5200 0234	AR			SHIM
11	1150 2811	4			NUT

MODEL CODES

16=Cherokee 2 Dr.(1981-83)
17=Cherokee 2 Dr.(1981-83)
73=Cherokee 2WD-2 Dr.(1984-86)
74=Cherokee 2WD-4 Dr.(1984-86)
18=Cherokee 4 Dr.(1981-83)
77=Cherokee 4WD-2 Dr.(1984-86)
78=Cherokee 4WD-4 Dr.(1984-86)
85=CJ-5 (1981-83)
86=CJ-6(1981)
87=CJ-7(1981-86)
88=CJ-8, Scrambler(1981-86)
64=Comanche 2WD-6 Ft. Box(1986)
66=Comanche 2WD-7 Ft. Box(1986)
63=Comanche 4WD-6 Ft. Box(1986)
65=Comanche 4WD-7 Ft. Box(1986)
15=Grand Wagoneer 4 Dr.(1984-86)
25=J-10 Truck 7 Ft. Box(1981-84)
26=J10 Truck 8 Ft. Box(1981-86)
27=J-20 Truck 8 Ft. Box(1981-86)
15=Wagoneer 4 Dr.(1981-83)
75=Wagoneer 4WD-4 Dr.(1984-86)

BODY
CJ=CJ-5, CJ-6, CJ-7, CJ-8, Scrambler(1981-86)
MJ=Comanche Pickup(1986)

STYLES
SJ=Wagoneer(1981-83), Grand Wagoneer(1984-86), Cherokee(1981-83), J-10, J-20(1981-86)
XJ=Wagoneer(1984-86), Cherokee(1984-86)

AR = Use as Required - = Non Illustrated Part P.A.R. = Paint as Required

« RETURN TO GROUP INDEX

FRONT SPRING AND SHOCK ABSORBER SJ CHEROKEE, SJ WAGONEER J10, J20
Figure 2-800

81J02 B00

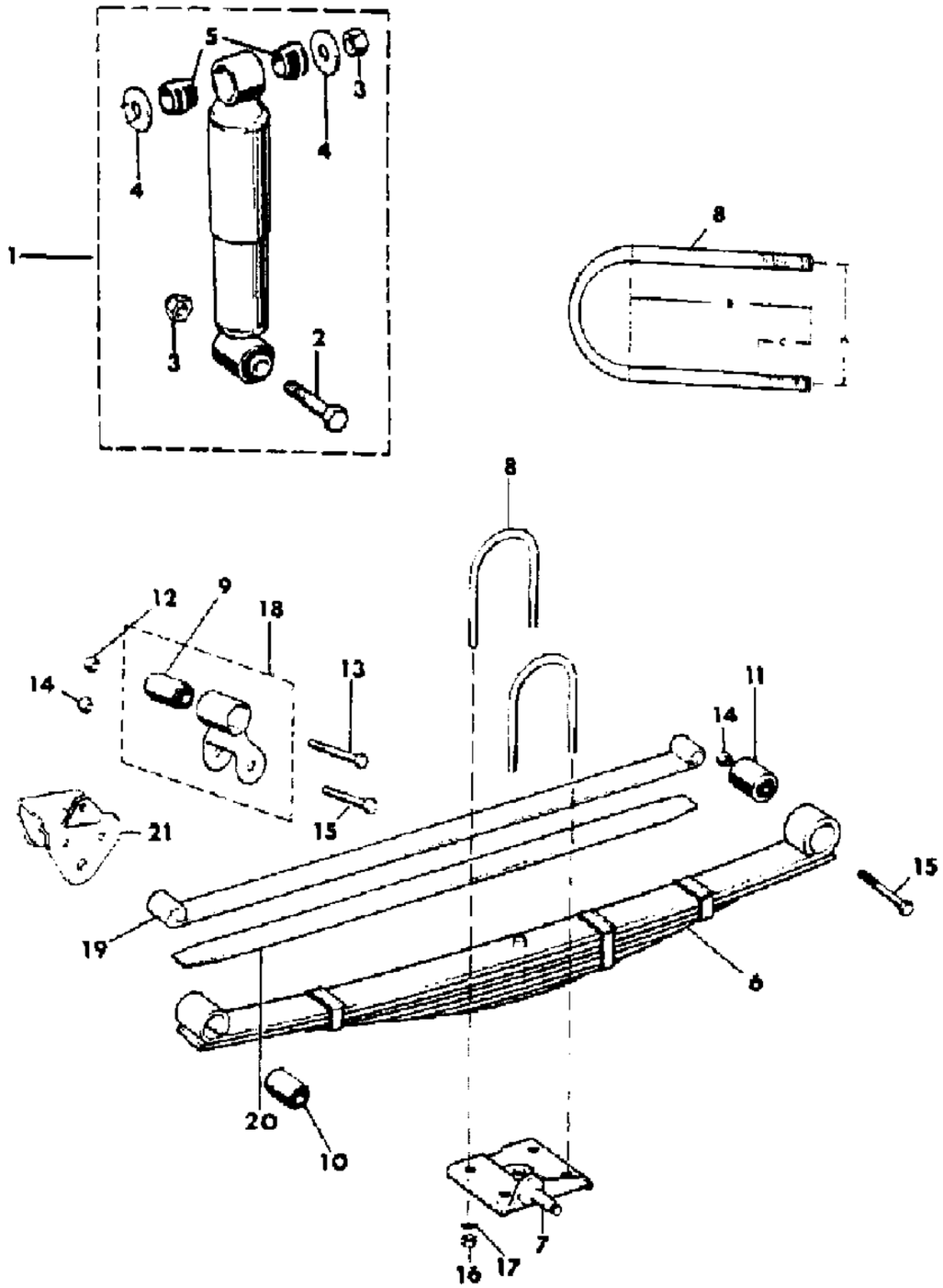

ITEM	PART NUMBER	QTY	BODY	MODEL	DESCRIPTION
1					SHOCK ABSORBER
					Light Duty
	J813 3734	2		15,16,1	1981-86
					Standard Duty
	J813 3732	2		15,16,1	1981-84
	J813 3732	2		25,26,2	1981-86
	8350 1877	2		15	1985-86
					Heavy Duty
	J812 9467	2		15,16,1	1981-86: EXPORT
	J812 9467	2		25,26	1981-86: EXPORT
					Extra Heavy Duty
	J813 3288	2		15,16,1	1981: EXPORT
	J813 3288	2		25,26	1981: EXPORT
	J813 3288	2		27	1981
	J813 4104	2		15,16,1	1982-86: EXPORT
	J813 4104	2		25,26	1982-86: EXPORT
	J813 4104	2		27	1982-86
					Right Hand Drive
	J813 4629	2		15,16,1	1982-86
	J813 4629	2		27	1982-86
2	J018 1709	2			BOLT
3	J400 4311	4			NUT
4	J013 1016	4			WASHER
5	J063 7936	4			BUSHING
6					SPRING ASSEMBLY ***
	J535 8997	2			Three Leaf
	J805 1247	2			Four Leaf
	J536 2950	2			Five Leaf
	J536 2949	2			Six Leaf
					SPRING ASSEMBLY, Seven Leaf ***
					Light Duty
	J536 2954	2		15,16,1	Six Cylinder, Soft Ride
	J536 2953	2		15,16,1	Eight Cylinder, Soft Ride
	J536 2951	2		27	
					Heavy Duty
	J536 2951	2		15,16,1	Six Cylinder, EXPORT
	J536 2951	2		25,26	Six Cylinder, EXPORT
	J536 2952	2		15,16,1	Eight Cylinder, EXPORT
	J536 2952	2		25,26	Eight Cylinder, EXPORT

MODEL CODES

16=Cherokee 2 Dr.(1981-83)
17=Cherokee 2 Dr.(1981-83)
73=Cherokee 2WD-2 Dr.(1984-86)
74=Cherokee 2WD-4 Dr.(1984-86)
18=Cherokee 4 Dr.(1981-83)
77=Cherokee 4WD-2 Dr.(1984-86)
78=Cherokee 4WD-4 Dr.(1984-86)
85=CJ-5 (1981-83)
86=CJ-6(1981)
87=CJ-7(1981-86)
88=CJ-8, Scrambler(1981-86)
64=Comanche 2WD-6 Ft. Box(1986)
66=Comanche 2WD-7 Ft. Box(1986)
63=Comanche 4WD-6 Ft. Box(1986)
65=Comanche 4WD-7 Ft. Box(1986)
15=Grand Wagoneer 4 Dr.(1984-86)
25=J-10 Truck 7 Ft. Box(1981-84)
26=J10 Truck 8 Ft. Box(1981-86)
27=J-20 Truck 8 Ft. Box(1981-86)
15=Wagoneer 4 Dr.(1981-83)
75=Wagoneer 4WD-4 Dr.(1984-86)

BODY
CJ=CJ-5, CJ-6, CJ-7, CJ-8, Scrambler(1981-86)
MJ=Comanche Pickup(1986)

STYLES
SJ=Wagoneer(1981-83), Grand Wagoneer(1984-86), Cherokee(1981-83), J-10, J-20(1981-86)
XJ=Wagoneer(1984-86), Cherokee(1984-86)

AR = Use as Required - = Non Illustrated Part P.A.R. = Paint as Required

FRONT SPRING AND SHOCK ABSORBER SJ CHEROKEE, SJ WAGONEER J10, J20
Figure 2-800

81J02 B00

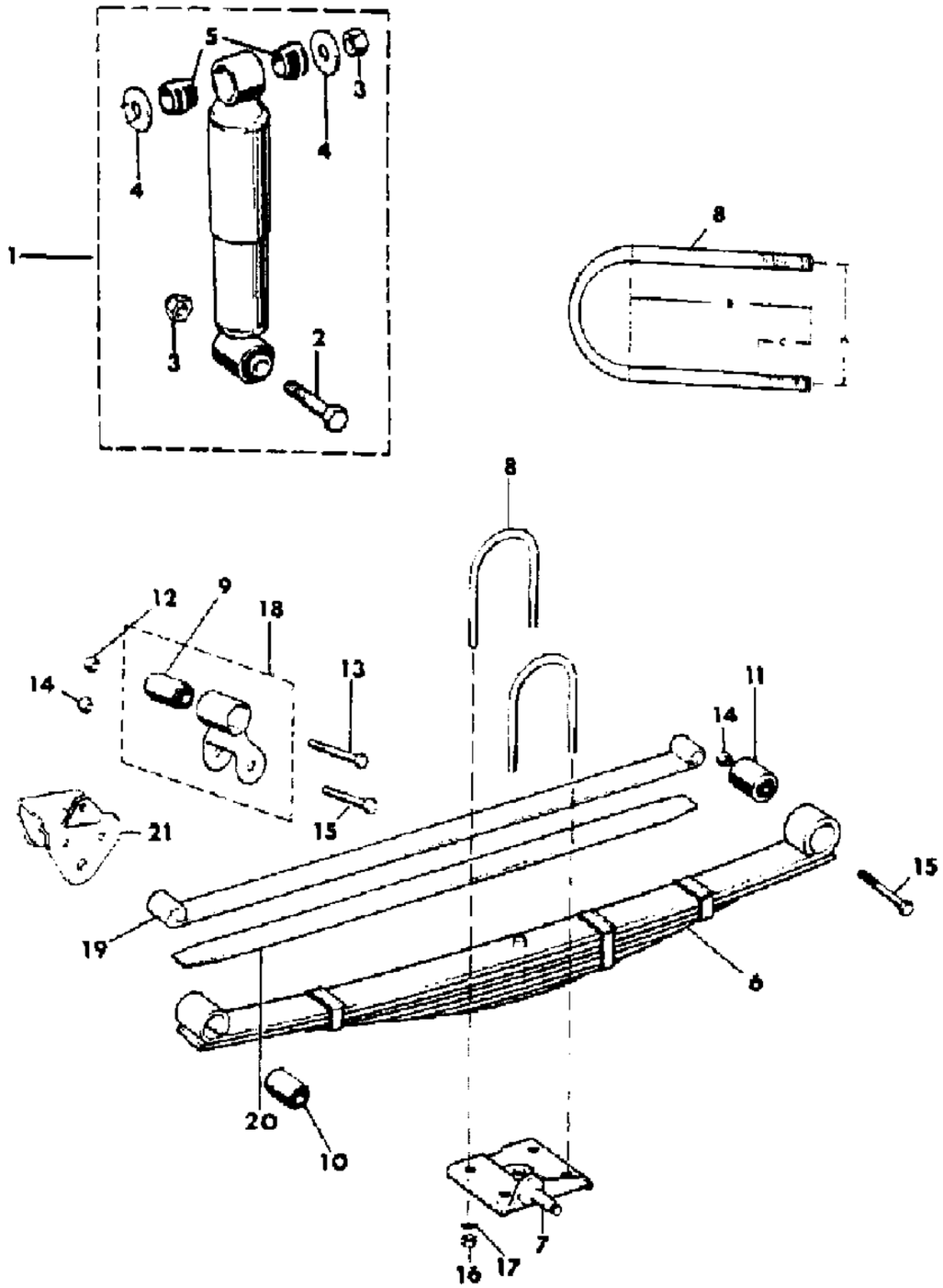

ITEM	PART NUMBER	QTY	BODY	MODEL	DESCRIPTION
	J536 2952	2		27	EXPORT
7					BRACKET
	J535 9583	1			Right
	J535 9582	1			Left
8					U-BOLT ***
	J812 9475	4			A=3.40" B=5.50" C=3.00"
	J812 9474	4			A=4.20" B=6.75" C=4.00"
	J812 9476	4			A=3.60" B=6.00" C=3.00"
	J536 3631	4			A=4.40" B=6.00" C=2.00"
9	J535 2079	2			BUSHING
10	J094 4870	2			BUSHING
11					BUSHING
	J535 5369	2			1.5" O.D.
	J535 8985	2			2.0" O.D.
12	J400 3979	2			NUT
13	S941 9209	2			BOLT
14	J400 5198	4			NUT
15	J400 4120	4			BOLT
16	J942 0350	8			NUT
17	J400 4806	8			WASHER
18					SHACKLE
	J535 2863	2		15,16,1	
	J535 2863	2		25,26	
	J535 2251	2		27	
19					SPRING, Front Leaf No. 1
	J813 4730	2			With Five Leaf Assembly
	J813 4729	2			With Six Leaf Assembly
					SPRING, Front Leaf No. 1, with Seven Leaf Assembly
					Light Duty
	J813 4738	2		15,16,1	Six Cylinder, Soft Ride
	J813 4735	2		15,16,1	Eight Cylinder, Soft Ride
	J813 4731	2		27	
					Heavy Duty
	J813 4731	2		15,16,1	Six Cylinder, EXPORT
	J813 4731	2		25,26	Six Cylinder, EXPORT
	J813 4734	2		15,16,1	Eight Cylinder, EXPORT
	J813 4734	2		25,26	Eight Cylinder, EXPORT
	J813 4734	2		27	EXPORT
20					SPRING, Front Leaf No. 2, with Seven Leaf Assembly

MODEL CODES

16=Cherokee 2 Dr.(1981-83)	78=Cherokee 4WD-4 Dr.(1984-86)	64=Comanche 2WD-6 Ft. Box(1986)	25=J-10 Truck 7 Ft. Box(1981-84)
17=Cherokee 2 Dr.(1981-83)	85=CJ-5 (1981-83)	66=Comanche 2WD-7 Ft. Box(1986)	26=J10 Truck 8 Ft. Box(1981-86)
73=Cherokee 2WD-2 Dr.(1984-86)	86=CJ-6(1981)	63=Comanche 4WD-6 Ft. Box(1986)	27=J-20 Truck 8 Ft. Box(1981-86)
74=Cherokee 2WD-4 Dr.(1984-86)	87=CJ-7(1981-86)	65=Comanche 4WD-7 Ft. Box(1986)	15=Wagoneer 4 Dr.(1981-83)
18=Cherokee 4 Dr.(1981-83)	88=CJ-8, Scrambler(1981-86)	15=Grand Wagoneer 4 Dr.(1984-86)	75=Wagoneer 4WD-4 Dr.(1984-86)
77=Cherokee 4WD-2 Dr.(1984-86)			

BODY
CJ=CJ-5, CJ-6, CJ-7, CJ-8, Scrambler(1981-86)
MJ=Comanche Pickup(1986)

STYLES
SJ=Wagoneer(1981-83), Grand Wagoneer(1984-86), Cherokee(1981-83), J-10, J-20(1981-86)
XJ=Wagoneer(1984-86), Cherokee(1984-86)

AR = Use as Required - = Non Illustrated Part P.A.R. = Paint as Required

FRONT SPRING AND SHOCK ABSORBER SJ CHEROKEE, SJ WAGONEER J10, J20
Figure 2-800

81J02 B00

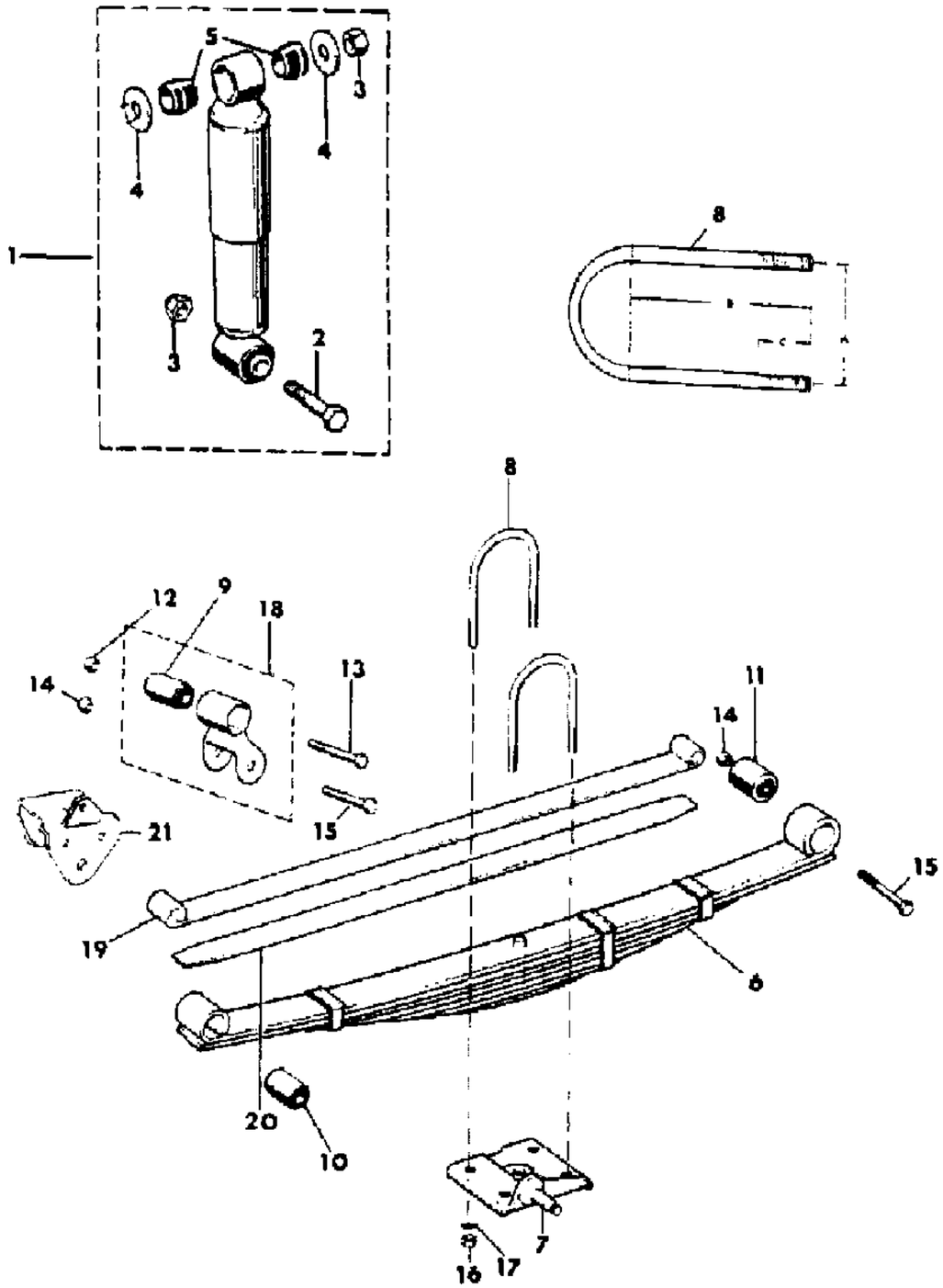

ITEM	PART NUMBER	QTY	BODY	MODEL	DESCRIPTION
					Light Duty
	J813 4737	2		15,16,1	Six Cylinder, Soft Ride
	J813 4736	2		15,16,1	Eight Cylinder, Soft Ride
	J813 4732	2		27	
					Heavy Duty
	J813 4732	2		15,16,1	Six Cylinder, EXPORT
	J813 4732	2		25,26	Six Cylinder, EXPORT
	J813 4733	2		15,16,1	Eight Cylinder, EXPORT
	J813 4733	2		25,26	Eight Cylinder, EXPORT
	J813 4733	2		27	EXPORT
21	J812 9561	2			BRACKET, Front Spring Mounting

MODEL CODES

16=Cherokee 2 Dr.(1981-83)
17=Cherokee 2 Dr.(1981-83)
73=Cherokee 2WD-2 Dr.(1984-86)
74=Cherokee 2WD-4 Dr.(1984-86)
18=Cherokee 4 Dr.(1981-83)
77=Cherokee 4WD-2 Dr.(1984-86)
78=Cherokee 4WD-4 Dr.(1984-86)
85=CJ-5 (1981-83)
86=CJ-6(1981)
87=CJ-7(1981-86)
88=CJ-8, Scrambler(1981-86)
64=Comanche 2WD-6 Ft. Box(1986)
66=Comanche 2WD-7 Ft. Box(1986)
63=Comanche 4WD-6 Ft. Box(1986)
65=Comanche 4WD-7 Ft. Box(1986)
15=Grand Wagoneer 4 Dr.(1984-86)
25=J-10 Truck 7 Ft. Box(1981-84)
26=J10 Truck 8 Ft. Box(1981-86)
27=J-20 Truck 8 Ft. Box(1981-86)
15=Wagoneer 4 Dr.(1981-83)
75=Wagoneer 4WD-4 Dr.(1984-86)

BODY
CJ=CJ-5, CJ-6, CJ-7, CJ-8, Scrambler(1981-86)
MJ=Comanche Pickup(1986)

STYLES
SJ=Wagoneer(1981-83), Grand Wagoneer(1984-86), Cherokee(1981-83), J-10, J-20(1981-86)
XJ=Wagoneer(1984-86), Cherokee(1984-86)

AR = Use as Required - = Non Illustrated Part P.A.R. = Paint as Required

DUAL FRONT SHOCK ABSORBERS SJ CHEROKEE, J10
Figure 2-900

81J02 900

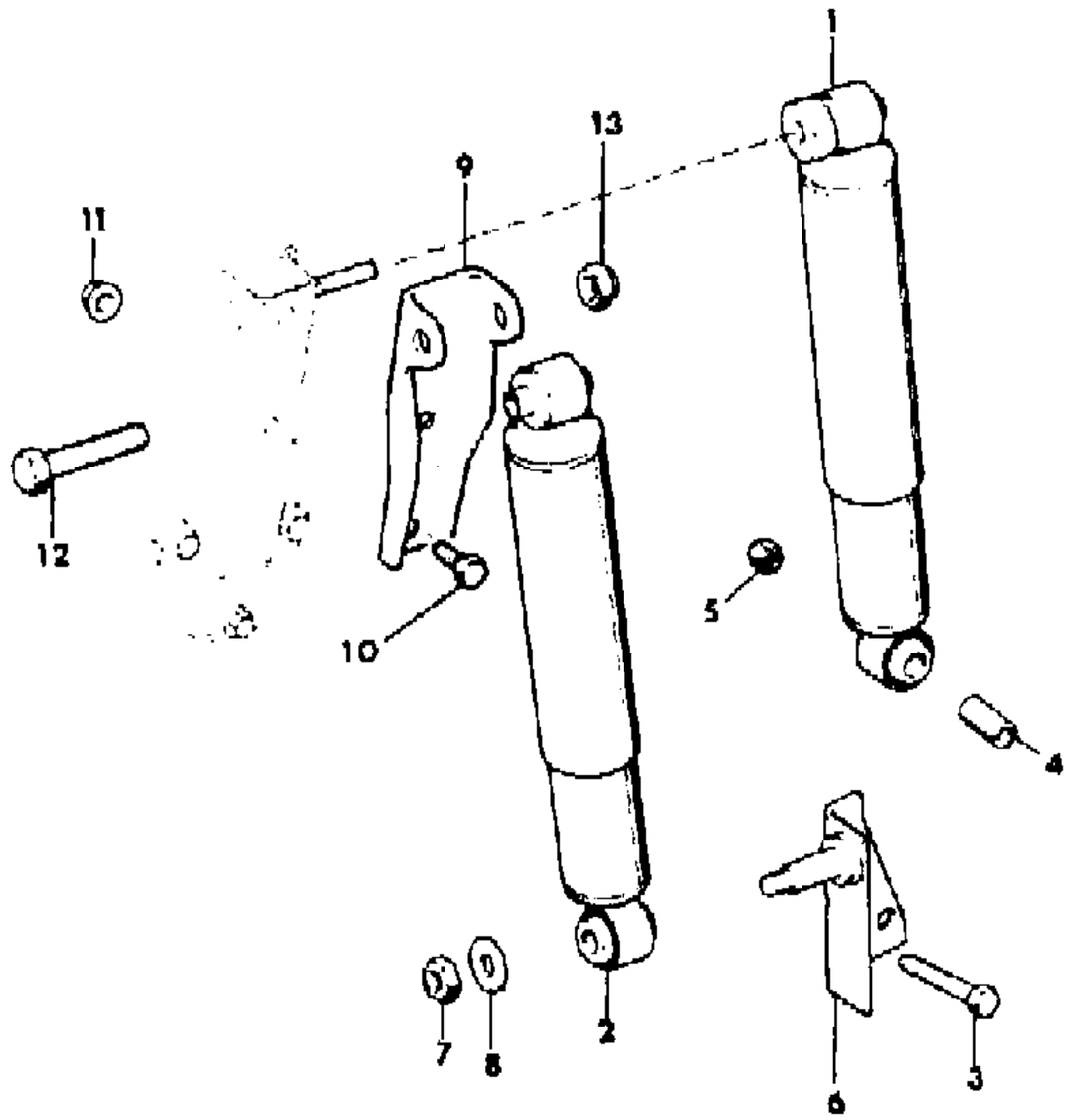

ITEM	PART NUMBER	QTY	BODY	MODEL	DESCRIPTION
1	J813 3286	2			SHOCK ABSORBER, Inner
2	J813 3297	2			SHOCK ABSORBER, Outer
3	S018 1650	2			BOLT
4	J536 2462	2			SPACER
5	J941 1783	2			NUT
6					BRACKET
	J536 2458	1			Right
	J536 2459	1			Left
7	J941 3215	2			NUT
8	J400 5702	2			WASHER
9	J536 2457	2			BRACKET
10	J018 0120	4			BOLT
11	J400 4008	4			NUT
12	S018 2786	2			BOLT
13	J400 4311	2			NUT

MODEL CODES

16=Cherokee 2 Dr.(1981-83)	78=Cherokee 4WD-4 Dr.(1984-86)	64=Comanche 2WD-6 Ft. Box(1986)	25=J-10 Truck 7 Ft. Box(1981-84)
17=Cherokee 2 Dr.(1981-83)	85=CJ-5 (1981-83)	66=Comanche 2WD-7 Ft. Box(1986)	26=J10 Truck 8 Ft. Box(1981-86)
73=Cherokee 2WD-2 Dr.(1984-86)	86=CJ-6(1981)	63=Comanche 4WD-6 Ft. Box(1986)	27=J-20 Truck 8 Ft. Box(1981-86)
74=Cherokee 2WD-4 Dr.(1984-86)	87=CJ-7(1981-86)	65=Comanche 4WD-7 Ft. Box(1986)	15=Wagoneer 4 Dr.(1981-83)
18=Cherokee 4 Dr.(1981-83)	88=CJ-8, Scrambler(1981-86)	15=Grand Wagoneer 4 Dr.(1984-86)	75=Wagoneer 4WD-4 Dr.(1984-86)
77=Cherokee 4WD-2 Dr.(1984-86)			

BODY
CJ=CJ-5, CJ-6, CJ-7, CJ-8, Scrambler(1981-86)
MJ=Comanche Pickup(1986)

STYLES
SJ=Wagoneer(1981-83), Grand Wagoneer(1984-86), Cherokee(1981-83), J-10, J-20(1981-86)
XJ=Wagoneer(1984-86), Cherokee(1984-86)

AR = Use as Required - = Non Illustrated Part P.A.R. = Paint as Required

« RETURN TO GROUP INDEX

AXLE ASSEMBLY, FRONT CJ-5,6,7,8, SCRAMBLER
Figure 2-1000

81J02 1000

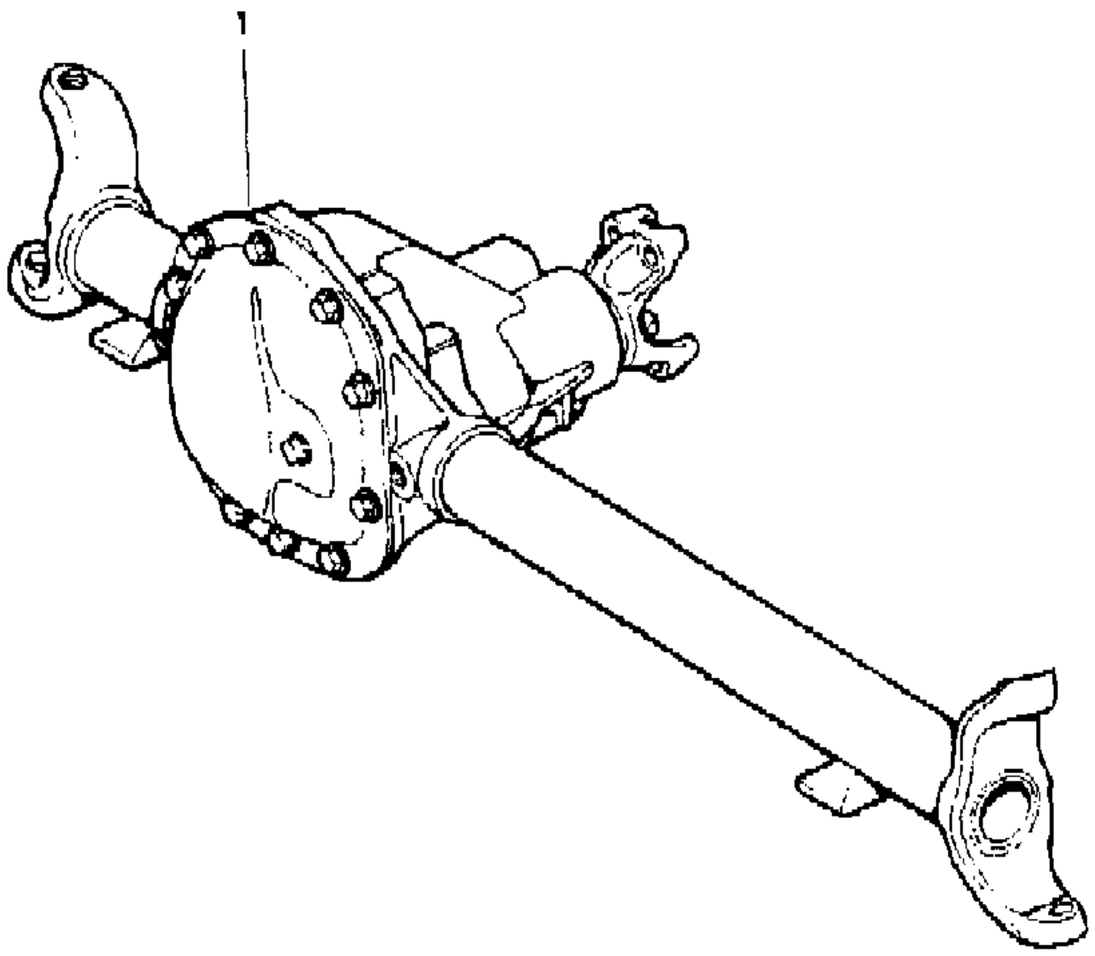

ITEM	PART NUMBER	QTY	BODY	MODEL	DESCRIPTION
1					AXLE ASSEMBLY, Front ***
					Left Hand Drive
	J813 3060	1			1981: 2.72 Ratio, Tagged 5361879
	J813 3687	1			1981: 2.72 Ratio, Tagged 5363137
	J813 3061	1			1981: 3.31 Ratio, Tagged 5361880
	J813 3688	1			1981: 3.31 Ratio, Tagged 5363138
	J813 3595	1			1981: 3.54 Ratio, Tagged 5362979
	J813 3689	1			1981: 3.54 Ratio, Tagged 5363143
	J813 3062	1			1981: 3.73 Ratio, Tagged 5361882
	J813 3690	1			1981: 3.73 Ratio, Tagged 5363140
	J813 3898	1		85	1982-83: 2.72 Ratio, Tagged 5363426
	J813 3899	1		85	1982-83: 3.31 Ratio, Tagged 5363427
	J813 3900	1		85	1982-83: 3.54 Ratio, Tagged 5363428
	J813 3901	1		85	1982-83: 4.09 Ratio, Tagged 5363429
	J813 3866	1		87,88	1982-86: 2.72 Ratio, Tagged 5363733, 8953004037 or 8953004231
	J813 3881	1		87,88	1982-86: 3.31 Ratio, Tagged 5363734, 8953004038 or 8953004232
	J813 3882	1		87,88	1982-86: 3.54 Ratio, Tagged 5363735, 8953004039 or 8953004233
	J813 3883	1		87,88	1982-86: 4.09 Ratio, Tagged 5363736, 8953004040 or 8953004234
	J813 4384	1		87,88	1982-86: 4.56 Ratio, Tagged 5364002, 8953004041 or 8953004235
					Right Hand Drive
	J813 3687	1			1981: 2.72 Ratio, Tagged 5363142
	J813 3688	1			1981: 3.31 Ratio, Tagged 5363141
	J813 3690	1			1981: 3.73 Ratio, Tagged 5363139
	J813 3898	1		85	1982-83: 2.72 Ratio, Tagged 5363430
	J813 3899	1		85	1982-83: 3.31 Ratio, Tagged 5363431
	J813 3901	1		85	1982-83: 4.09 Ratio, Tagged 5363432
	J813 3866	1		87,88	1982-86: 2.72 Ratio, Tagged 5363737, 8953004228 or 8953004236
	J813 3881	1		87,88	1982-86: 3.31 Ratio, Tagged 5363738, 8953004229 or 8953004237
	J813 3883	1		87,88	1982-86: 4.09 Ratio, Tagged 5363739, 8953004230 or 8953004238
	J813 4384	1		87,88	1982-86: 4.56 Ratio, Tagged 5364781

MODEL CODES

16=Cherokee 2 Dr.(1981-83)	78=Cherokee 4WD-4 Dr.(1984-86)	64=Comanche 2WD-6 Ft. Box(1986)	25=J-10 Truck 7 Ft. Box(1981-84)
17=Cherokee 2 Dr.(1981-83)	85=CJ-5 (1981-83)	66=Comanche 2WD-7 Ft. Box(1986)	26=J10 Truck 8 Ft. Box(1981-86)
73=Cherokee 2WD-2 Dr.(1984-86)	86=CJ-6(1981)	63=Comanche 4WD-6 Ft. Box(1986)	27=J-20 Truck 8 Ft. Box(1981-86)
74=Cherokee 2WD-4 Dr.(1984-86)	87=CJ-7(1981-86)	65=Comanche 4WD-7 Ft. Box(1986)	15=Wagoneer 4 Dr.(1981-83)
18=Cherokee 4 Dr.(1981-83)	88=CJ-8, Scrambler(1981-86)	15=Grand Wagoneer 4 Dr.(1984-86)	75=Wagoneer 4WD-4 Dr.(1984-86)
77=Cherokee 4WD-2 Dr.(1984-86)			

BODY
CJ=CJ-5, CJ-6, CJ-7, CJ-8, Scrambler(1981-86)
MJ=Comanche Pickup(1986)

STYLES
SJ=Wagoneer(1981-83), Grand Wagoneer(1984-86), Cherokee(1981-83), J-10, J-20(1981-86)
XJ=Wagoneer(1984-86), Cherokee(1984-86)

AR = Use as Required - = Non Illustrated Part P.A.R. = Paint as Required

« RETURN TO GROUP INDEX

HOUSING, FRONT AXLE CJ-5,6,7,8, SCRAMBLER
Figure 2-1100

81J02 1100

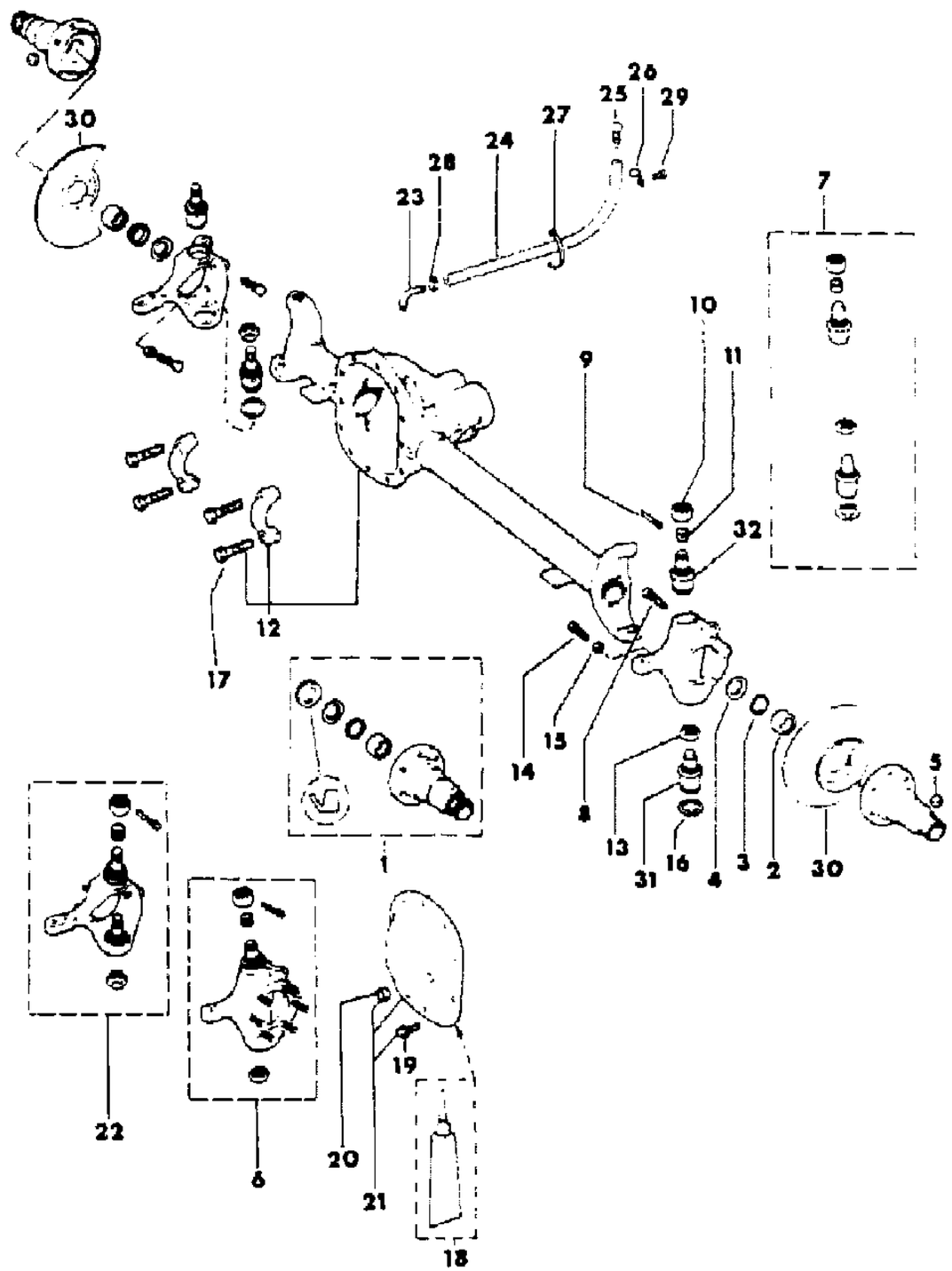

ITEM	PART NUMBER	QTY	BODY	MODEL	DESCRIPTION
1	J812 8147	2			SPINDLE ASSEMBLY ***
2	J812 1402	2			BEARING
3	J812 1397	2			SEAL
4	J812 7348	2			SPACER
5	J941 1783	12			NUT
6	J812 9655	1			KNUCKLE, Steering, Left
7	J812 4333	2			SOCKET PACKAGE ***
8	J812 8490	12			BOLT
9	J812 1392	2			PIN
10	J812 1364	2			NUT, Castle
11	J812 1365	2			RING, Split
12					HOUSING, Front Axle
	J813 3594	1			1981: Tagged 5361879, 5361880, 5361882, 5362979
	J813 3691	1			1981: Tagged 5363137, 5363138, 5363143 or 5363140
	J813 3897	1		85	1982-83
	J813 3868	1		87,88	1982-86
13	J812 1391	2			NUT
14	J813 0382	2			BOLT
15	S011 4494	2			NUT
16	J812 4362	2			RING, Snap
17	S017 9890	4			BOLT
18	J899 3317	1			SEALER ***
19	J099 1546	10			BOLT
20	S010 3869	1			PLUG
21	J812 6498	1			COVER PACKAGE
22	J812 9654	1			KNUCKLE, Steering, Right
23	J535 3495	1			VENT
24	J812 5823	1			HOSE, Bulk
25	J535 2955	1			BREATHER ***
26	J014 0780	1			CLIP
27	J322 3227	1			STRAP
28	J322 7851	1			CLAMP
29	J400 3556	1			SCREW
30					SHIELD, Splash
					Right
	J535 8619	1			1981
	J536 3380	1			1982-86
					Left
	J535 8619	1			1981

MODEL CODES
16=Cherokee 2 Dr.(1981-83)
17=Cherokee 2 Dr.(1981-83)
73=Cherokee 2WD-2 Dr.(1984-86)
74=Cherokee 2WD-4 Dr.(1984-86)
18=Cherokee 4 Dr.(1981-83)
77=Cherokee 4WD-2 Dr.(1984-86)
78=Cherokee 4WD-4 Dr.(1984-86)
85=CJ-5 (1981-83)
86=CJ-6(1981)
87=CJ-7(1981-86)
88=CJ-8, Scrambler(1981-86)
64=Comanche 2WD-6 Ft. Box(1986)
66=Comanche 2WD-7 Ft. Box(1986)
63=Comanche 4WD-6 Ft. Box(1986)
65=Comanche 4WD-7 Ft. Box(1986)
15=Grand Wagoneer 4 Dr.(1984-86)
25=J-10 Truck 7 Ft. Box(1981-84)
26=J10 Truck 8 Ft. Box(1981-86)
27=J-20 Truck 8 Ft. Box(1981-86)
15=Wagoneer 4 Dr.(1981-83)
75=Wagoneer 4WD-4 Dr.(1984-86)

BODY
CJ=CJ-5, CJ-6, CJ-7, CJ-8, Scrambler(1981-86)
MJ=Comanche Pickup(1986)

STYLES
SJ=Wagoneer(1981-83), Grand Wagoneer(1984-86), Cherokee(1981-83), J-10, J-20(1981-86)
XJ=Wagoneer(1984-86), Cherokee(1984-86)

AR = Use as Required - = Non Illustrated Part P.A.R. = Paint as Required

HOUSING, FRONT AXLE CJ-5,6,7,8, SCRAMBLER
Figure 2-1100

81J02 1100

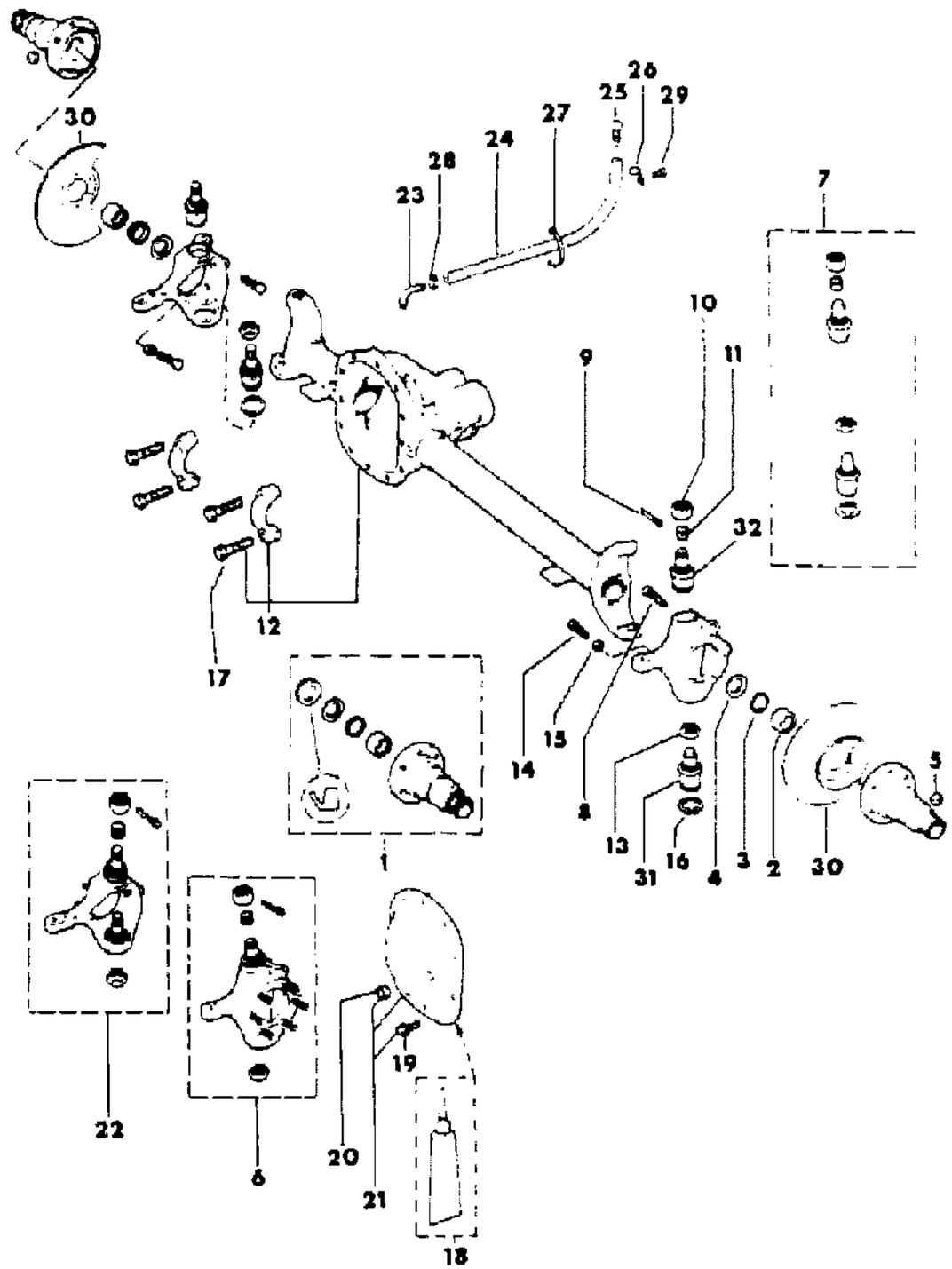

ITEM	PART NUMBER	QTY	BODY	MODEL	DESCRIPTION
	J536 3379	1			1982-86
31	J812 2496	2			SOCKET, Lower
32	J812 2495	2			SOCKET, Upper

MODEL CODES

16=Cherokee 2 Dr.(1981-83)	78=Cherokee 4WD-4 Dr.(1984-86)	64=Comanche 2WD-6 Ft. Box(1986)	25=J-10 Truck 7 Ft. Box(1981-84)
17=Cherokee 2 Dr.(1981-83)	85=CJ-5 (1981-83)	66=Comanche 2WD-7 Ft. Box(1986)	26=J10 Truck 8 Ft. Box(1981-86)
73=Cherokee 2WD-2 Dr.(1984-86)	86=CJ-6(1981)	63=Comanche 4WD-6 Ft. Box(1986)	27=J-20 Truck 8 Ft. Box(1981-86)
74=Cherokee 2WD-4 Dr.(1984-86)	87=CJ-7(1981-86)	65=Comanche 4WD-7 Ft. Box(1986)	15=Wagoneer 4 Dr.(1981-83)
18=Cherokee 4 Dr.(1981-83)	88=CJ-8, Scrambler(1981-86)	15=Grand Wagoneer 4 Dr.(1984-86)	75=Wagoneer 4WD-4 Dr.(1984-86)
77=Cherokee 4WD-2 Dr.(1984-86)			

BODY
CJ=CJ-5, CJ-6, CJ-7, CJ-8, Scrambler(1981-86)
MJ=Comanche Pickup(1986)

STYLES
SJ=Wagoneer(1981-83), Grand Wagoneer(1984-86), Cherokee(1981-83), J-10, J-20(1981-86)
XJ=Wagoneer(1984-86), Cherokee(1984-86)

AR = Use as Required - = Non Illustrated Part P.A.R. = Paint as Required

« RETURN TO GROUP INDEX

DIFFERENTIAL, FRONT AXLE CJ-5,6,7,8, SCRAMBLER
Figure 2-1200

81J02 1200

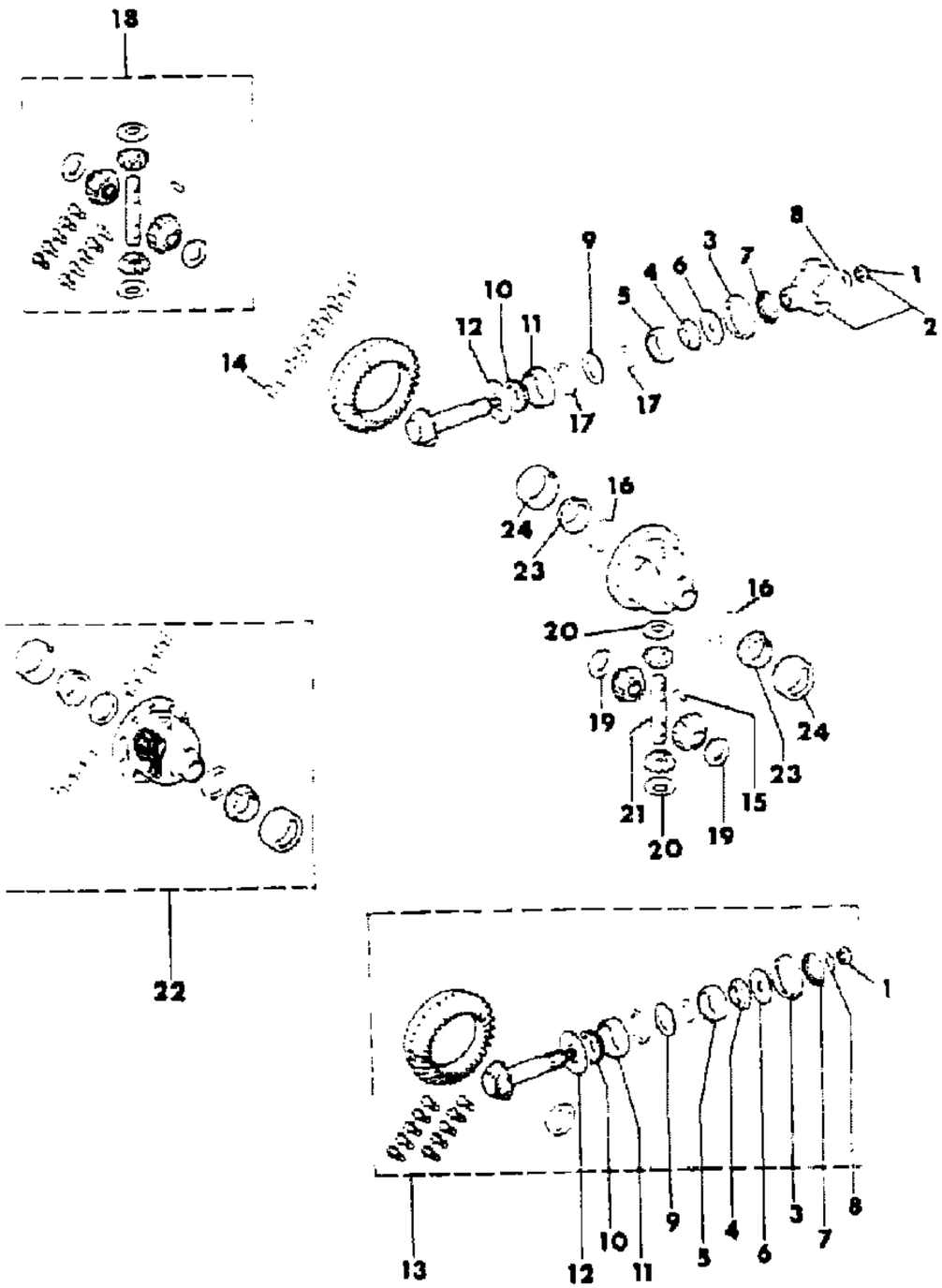

ITEM	PART NUMBER	QTY	BODY	MODEL	DESCRIPTION
1	J080 1367	1			NUT
2					YOKE, Pinion
	J813 3241	1			1981-86: With Dust Slinger on Yoke
	8350 3388	1			1986: Without Dust Slinger on Yoke
3					SEAL, Pinion
	J099 8092	1			1981-86: With Dust Slinger on Yoke
	8350 3390	1			1986: Without Dust Slinger on Yoke
4	J005 2878	1			CONE, Bearing
5	J005 2879	1			CUP, Bearing
6	J063 6566	1			SLINGER, Dust
7	J063 6568	1			SHIELD, Dust
8	J063 6570	1			WASHER
9	J093 4937	1			BAFFLE ***
10	J315 6066	1			CONE, Bearing
11	J315 6065	1			CUP, Bearing
12	J091 6372	1			SLINGER, Oil
13					GEAR PACKAGE, Front Axle Ring and Pinion
	J813 3063	1			2.72 Ratio
	J813 2601	1			3.31 Ratio
	J812 6518	1			3.54 Ratio
	J094 5345	1			3.73 Ratio
	J812 6494	1			4.09 Ratio
	J813 4385	1			4.56 Ratio
14	J064 9454	10			BOLT
15	J063 6360	1			PIN
16	J812 6506	1			SHIM PACKAGE (8), Case ***
17	J812 6503	1			SHIM PACKAGE (14), Pinion ***
18	J812 6497	1			GEAR PACKAGE, Front Axle Differential
19	J812 0832	2			WASHER
20	J812 0831	2			WASHER
21	J812 0833	1			SHAFT
22					CASE, Front Axle Differential
	J812 6513	1			2.72, 3.31, 3.54 or 3.73 Ratios
	J812 6495	1			4.09 or 4.56 Ratios
23	J315 6052	2			CONE, Bearing
24	J317 1166	2			CUP, Bearing

MODEL CODES

16=Cherokee 2 Dr.(1981-83)
17=Cherokee 2 Dr.(1981-83)
73=Cherokee 2WD-2 Dr.(1984-86)
74=Cherokee 2WD-4 Dr.(1984-86)
18=Cherokee 4 Dr.(1981-83)
77=Cherokee 4WD-2 Dr.(1984-86)
78=Cherokee 4WD-4 Dr.(1984-86)
85=CJ-5 (1981-83)
86=CJ-6(1981)
87=CJ-7(1981-86)
88=CJ-8, Scrambler(1981-86)
64=Comanche 2WD-6 Ft. Box(1986)
66=Comanche 2WD-7 Ft. Box(1986)
63=Comanche 4WD-6 Ft. Box(1986)
65=Comanche 4WD-7 Ft. Box(1986)
15=Grand Wagoneer 4 Dr.(1984-86)
25=J-10 Truck 7 Ft. Box(1981-84)
26=J10 Truck 8 Ft. Box(1981-86)
27=J-20 Truck 8 Ft. Box(1981-86)
15=Wagoneer 4 Dr.(1981-83)
75=Wagoneer 4WD-4 Dr.(1984-86)

BODY
CJ=CJ-5, CJ-6, CJ-7, CJ-8, Scrambler(1981-86)
MJ=Comanche Pickup(1986)

STYLES
SJ=Wagoneer(1981-83), Grand Wagoneer(1984-86), Cherokee(1981-83), J-10, J-20(1981-86)
XJ=Wagoneer(1984-86), Cherokee(1984-86)

AR = Use as Required - = Non Illustrated Part P.A.R. = Paint as Required

« RETURN TO GROUP INDEX

SHAFTS, FRONT AXLE CJ-5,6,7,8, SCRAMBLER
Figure 2-1300

81J02 1300

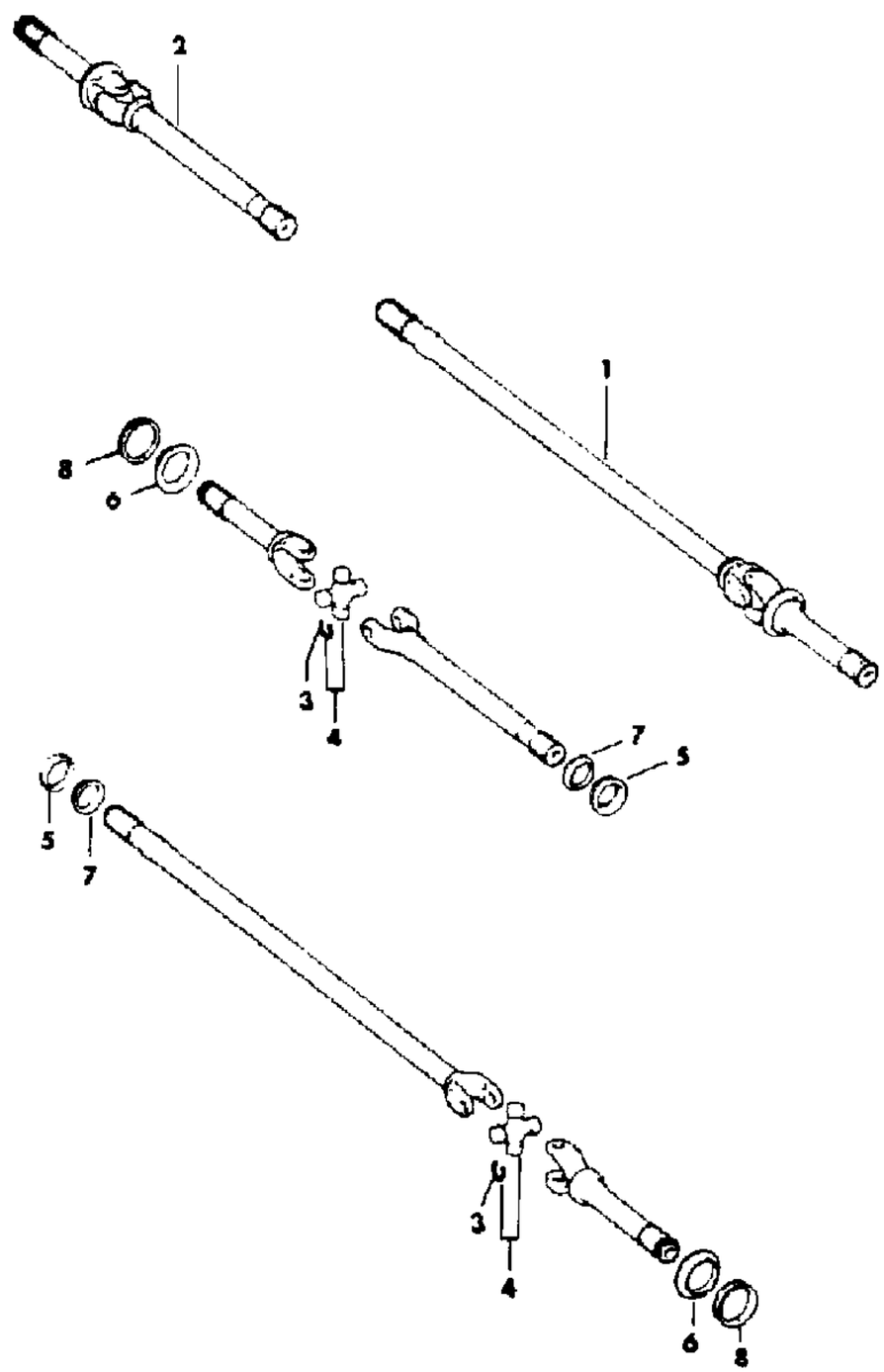

ITEM	PART NUMBER	QTY	BODY	MODEL	DESCRIPTION
1					SHAFT, Axle, Left
	J812 7599	1			1981
	J812 7599	1		85	1982-83
	J813 4293	1		87,88	1982-86
2					SHAFT, Axle, Right
	J812 7598	1			1981
	J812 7598	1		85	1982-83
	J813 4294	1		87,88	1982-86
3	J090 9453	8			RING, Snap
4	J812 6637	2			SPIDER ASSEMBLY ***
5	J812 1781	2			SEAL
6	J812 8285	2			RETAINER, Outer
7	J812 6232	2			RETAINER, Inner
8	J812 7350	2			SEAL

MODEL CODES

16=Cherokee 2 Dr.(1981-83)
17=Cherokee 2 Dr.(1981-83)
73=Cherokee 2WD-2 Dr.(1984-86)
74=Cherokee 2WD-4 Dr.(1984-86)
18=Cherokee 4 Dr.(1981-83)
77=Cherokee 4WD-2 Dr.(1984-86)
78=Cherokee 4WD-4 Dr.(1984-86)
85=CJ-5 (1981-83)
86=CJ-6(1981)
87=CJ-7(1981-86)
88=CJ-8, Scrambler(1981-86)
64=Comanche 2WD-6 Ft. Box(1986)
66=Comanche 2WD-7 Ft. Box(1986)
63=Comanche 4WD-6 Ft. Box(1986)
65=Comanche 4WD-7 Ft. Box(1986)
15=Grand Wagoneer 4 Dr.(1984-86)
25=J-10 Truck 7 Ft. Box(1981-84)
26=J10 Truck 8 Ft. Box(1981-86)
27=J-20 Truck 8 Ft. Box(1981-86)
15=Wagoneer 4 Dr.(1981-83)
75=Wagoneer 4WD-4 Dr.(1984-86)

BODY
CJ=CJ-5, CJ-6, CJ-7, CJ-8, Scrambler(1981-86)
MJ=Comanche Pickup(1986)

STYLES
SJ=Wagoneer(1981-83), Grand Wagoneer(1984-86), Cherokee(1981-83), J-10, J-20(1981-86)
XJ=Wagoneer(1984-86), Cherokee(1984-86)

AR = Use as Required - = Non Illustrated Part P.A.R. = Paint as Required

« RETURN TO GROUP INDEX

AXLE ASSEMBLY, FRONT FOUR WHEEL DRIVE XJ CHEROKEE, XJ WAGONEER, COMANCHE
Figure 2-1400

81J02 1400

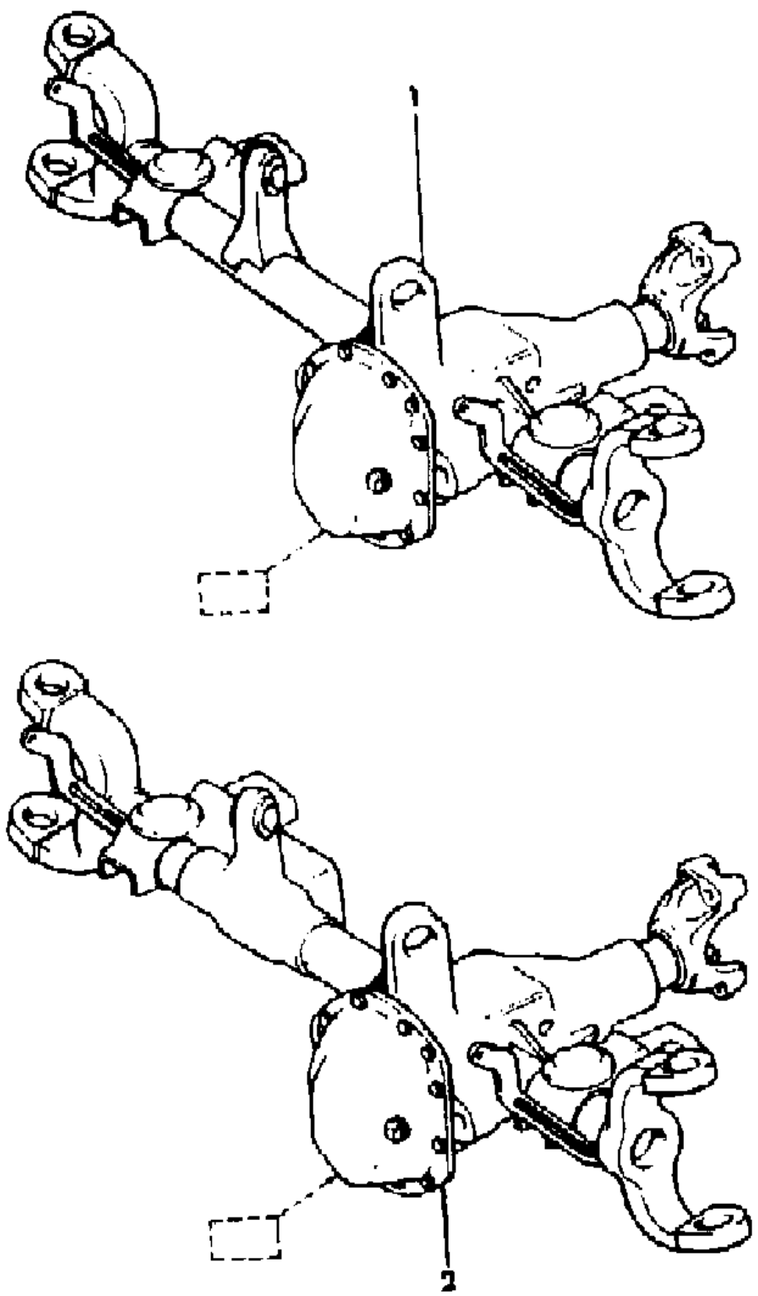

ITEM	PART NUMBER	QTY	BODY	MODEL	DESCRIPTION
1					AXLE ASSEMBLY, Front, Without Disconnect ***
	8350 1446	1			1984-85: 3.31 Ratio, Tagged 8953002091, 8953001326, 8953002093 or 8953001364
	8350 1447	1			1984-85: 3.73 Ratio, Tagged 8953002092, 8953001327, 8953002094 or 8953001366
	8350 2630	1			1986: 3.54 Ratio, Tagged 8953003435 or 8953004459
	8350 4205	1			1986: 3.55 Ratio, Tagged 8953005045
	8350 2631	1			1986: 4.10 Ratio, Tagged 8953003436 or 8953004458
2					AXLE ASSEMBLY, Front, With Disconnect ***
					Without System Sentry
	8350 1162	1			1984-85: 3.31 Ratio, Tagged 8953000931 or 8953003715
	8350 1162	1			1984-86: 3.31 Ratio, Tagged 8953000932
	8350 1163	1			1984-85: 3.73 Ratio, Tagged 8953000396, 8953000395 or 8953003720
	8350 3564	1			1986: 3.07 Ratio, Tagged 8953000930
	8350 2356	1			1986: 3.54 Ratio, Tagged 8953000393
	8350 4304	1			1986: 3.55 Ratio Tagged 8953005043
	8350 2354	1			1986: 4.10 Ratio, Tagged 8953000394 or 8953004244
	8350 3567	1			1986: 4.56 Ratio, Tagged 8953003497
					With System Sentry
	8350 0185	1			1985: 3.31 Ratio, Tagged 8953001214, 8953001215 or 8953003716
	8350 0186	1			1985: 3.73 Ratio, Tagged 8953001218, 8953001219 or 8953003714

MODEL CODES

16=Cherokee 2 Dr.(1981-83)	78=Cherokee 4WD-4 Dr.(1984-86)	64=Comanche 2WD-6 Ft. Box(1986)	25=J-10 Truck 7 Ft. Box(1981-84)
17=Cherokee 2 Dr.(1981-83)	85=CJ-5 (1981-83)	66=Comanche 2WD-7 Ft. Box(1986)	26=J10 Truck 8 Ft. Box(1981-86)
73=Cherokee 2WD-2 Dr.(1984-86)	86=CJ-6(1981)	63=Comanche 4WD-6 Ft. Box(1986)	27=J-20 Truck 8 Ft. Box(1981-86)
74=Cherokee 2WD-4 Dr.(1984-86)	87=CJ-7(1981-86)	65=Comanche 4WD-7 Ft. Box(1986)	15=Wagoneer 4 Dr.(1981-83)
18=Cherokee 4 Dr.(1981-83)	88=CJ-8, Scrambler(1981-86)	15=Grand Wagoneer 4 Dr.(1984-86)	75=Wagoneer 4WD-4 Dr.(1984-86)
77=Cherokee 4WD-2 Dr.(1984-86)			

BODY
CJ=CJ-5, CJ-6, CJ-7, CJ-8, Scrambler(1981-86)
MJ=Comanche Pickup(1986)

STYLES
SJ=Wagoneer(1981-83), Grand Wagoneer(1984-86), Cherokee(1981-83), J-10, J-20(1981-86)
XJ=Wagoneer(1984-86), Cherokee(1984-86)

AR = Use as Required - = Non Illustrated Part P.A.R. = Paint as Required

« RETURN TO GROUP INDEX

HOUSING, FRONT AXLE FOUR WHEEL DRIVE WITHOUT DISCONNECT XJ CHEROKEE, XJ WAGONEER, COMANCHE
Figure 2-1500

81J02 1500

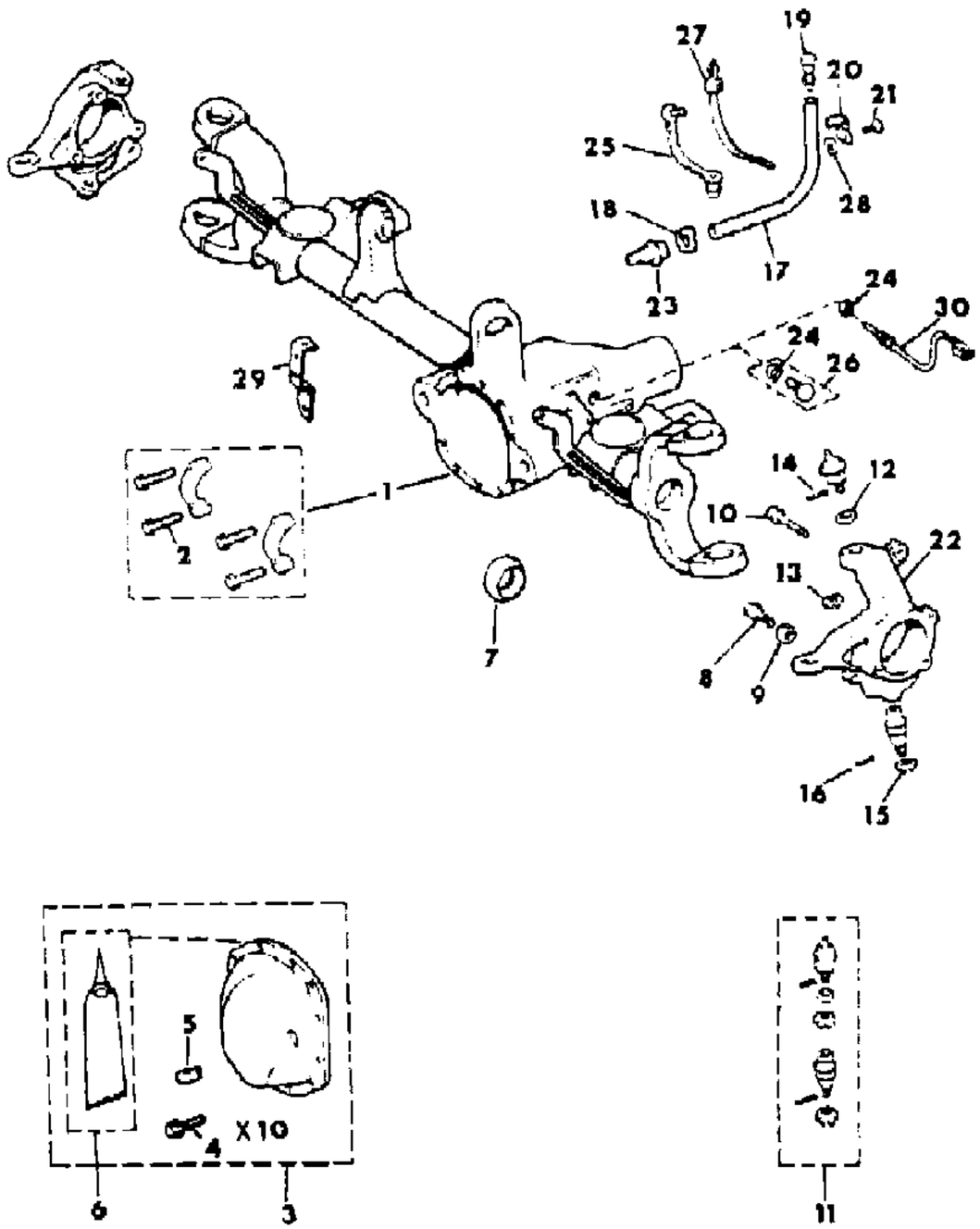

ITEM	PART NUMBER	QTY	BODY	MODEL	DESCRIPTION
1					HOUSING, Front Axle
	8350 5517	1			1984-86: Without System Sentry
	8350 5519	1			1985: With System Sentry
2	S017 9890	4			BOLT
3	8350 0194	1			COVER PACKAGE
4	J099 546	10			BOLT
5	S010 3869	1			PLUG
6	J899 3317	1			SEALER ***
7	J812 1781	2			SEAL
8	JA00 0821	2			BOLT
9	S011 4494	2			NUT
10	3420 1535	6			BOLT
11	8350 0202	1			SOCKET PACKAGE ***
12	8350 0203	2			RING, Split
13	J012 5258	1			NUT
14	J812 1392	2			PIN, Cotter
15	J812 3318	2			NUT
16	1101 0069	2			PIN, Cotter
17	J812 5823	1			HOSE, Bulk
18	J322 7851	1			CLAMP
19	J535 2955	1			BREATHER ***
20	J014 0780	1			CLIP
21	1150 1608	1			SCREW
22					KNUCKLE, Steering
	5300 0626	1			Right
	5300 0625	1			Left
23	8350 0330	1			VENT
24	3300 0322	1			GASKET
25	J400 1712	1			STRAP
26	8350 0271	1			PLUG PACKAGE ***
27	3420 1788	2			STRAP
28	J400 3084	1			PUSHNUT ***
29	5300 1441	1			BRACKET
30	5300 0376	1			SENSOR, System Sentry

MODEL CODES

16=Cherokee 2 Dr.(1981-83)
17=Cherokee 2 Dr.(1981-83)
73=Cherokee 2WD-2 Dr.(1984-86)
74=Cherokee 2WD-4 Dr.(1984-86)
18=Cherokee 4 Dr.(1981-83)
77=Cherokee 4WD-2 Dr.(1984-86)
78=Cherokee 4WD-4 Dr.(1984-86)
85=CJ-5 (1981-83)
86=CJ-6(1981)
87=CJ-7(1981-86)
88=CJ-8, Scrambler(1981-86)
64=Comanche 2WD-6 Ft. Box(1986)
66=Comanche 2WD-7 Ft. Box(1986)
63=Comanche 4WD-6 Ft. Box(1986)
65=Comanche 4WD-7 Ft. Box(1986)
15=Grand Wagoneer 4 Dr.(1984-86)
25=J-10 Truck 7 Ft. Box(1981-84)
26=J10 Truck 8 Ft. Box(1981-86)
27=J-20 Truck 8 Ft. Box(1981-86)
15=Wagoneer 4 Dr.(1981-83)
75=Wagoneer 4WD-4 Dr.(1984-86)

BODY
CJ=CJ-5, CJ-6, CJ-7, CJ-8, Scrambler(1981-86)
MJ=Comanche Pickup(1986)

STYLES
SJ=Wagoneer(1981-83), Grand Wagoneer(1984-86), Cherokee(1981-83), J-10, J-20(1981-86)
XJ=Wagoneer(1984-86), Cherokee(1984-86)

AR = Use as Required - = Non Illustrated Part P.A.R. = Paint as Required

« RETURN TO GROUP INDEX

HOUSING, FRONT AXLE FOUR WHEEL DRIVE WITH DISCONNECT XJ CHEROKEE, XJ WAGONEER, COMANCHE
Figure 2-1600

81J02 1600

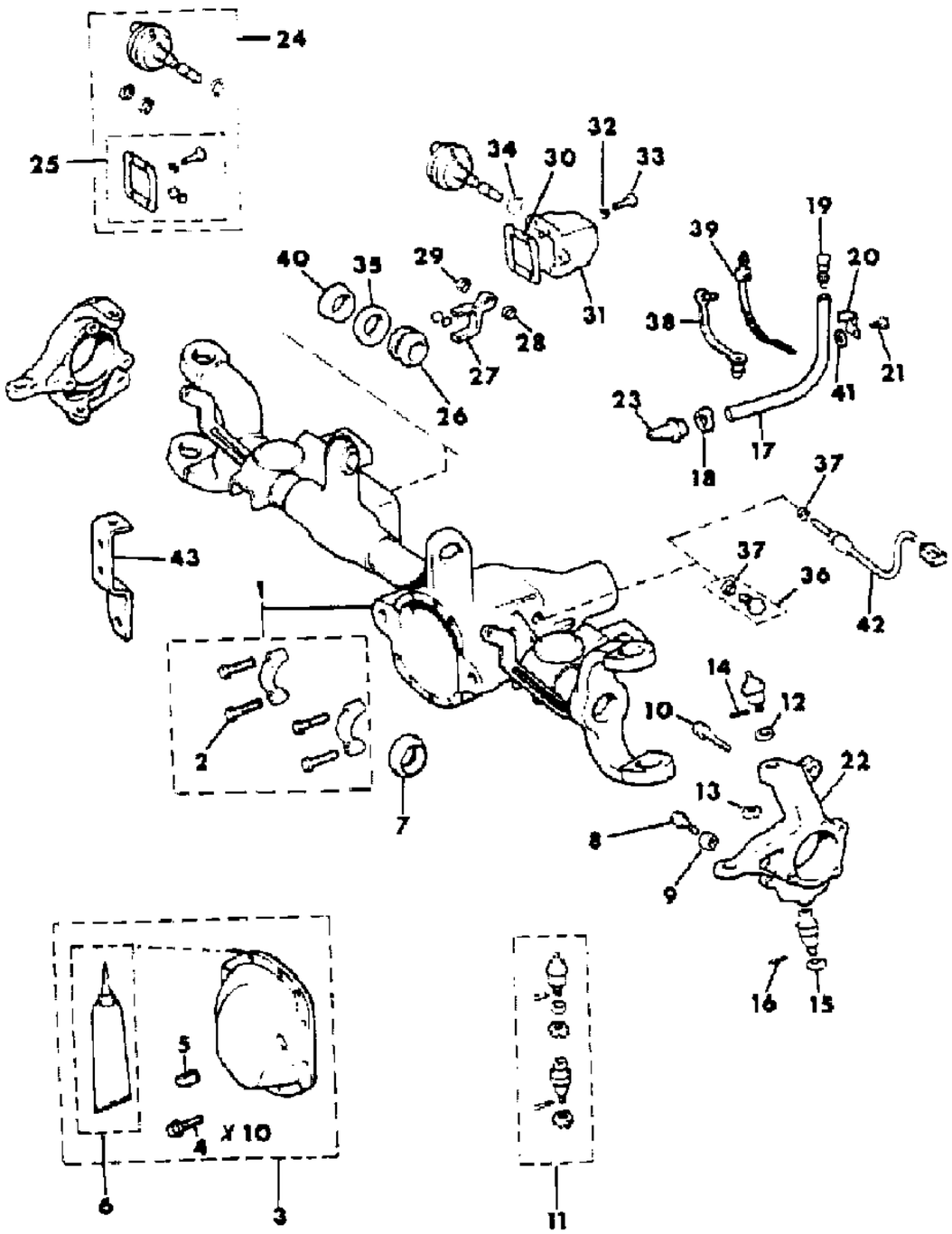

ITEM	PART NUMBER	QTY	BODY	MODEL	DESCRIPTION
1					HOUSING, Front Axle
	8350 5518	1			1984-86: Without System Sentry
	8350 5520	1			1985: With System Sentry
2	S017 9890	4			BOLT
3	8350 0194	1			COVER PACKAGE
4	J099 1546	10			BOLT
5	S010 3869	1			PLUG
6	J899 3317	1			SEALER ***
7	J812 1781	1			SEAL
8	JA00 0821	2			BOLT
9	S011 4494	2			NUT
10	3420 1535	6			BOLT
11	8350 0202	2			SOCKET PACKAGE ***
12	8350 0203	2			RING, Split
13	J012 5258	2			NUT
14	J812 1392	2			PIN, Cotter
15	J812 3318	2			NUT
16	1101 0069	2			PIN, Cotter
17	J812 5823	1			HOSE, Bulk
18	J322 7851	1			CLAMP
19	J535 2955	1			BREATHER ***
20	J014 0780	1			CLIP
21	1150 1608	1			SCREW
22					KNUCKLE, Steering
	5300 0626	1			Right
	5300 0625	1			Left
23	8350 0330	1			VENT
24	8350 3113	1			MOTOR PACKAGE ***
25	J813 3708	1			PAD PACKAGE ***
26	J813 4214	1			COLLAR, Axle Shaft
27	8350 0197	1			FORK, Axle Shift
28	J813 3618	1			RING, Snap, Inner
29	J813 3619	1			RING, Snap, Outer
30	J813 3709	1			GASKET
31	8350 0195	1			COVER, Axle Shift
32	J813 3624	4			WASHER
33	J813 3623	4			BOLT
34	J813 3620	1			O-RING
35					SEAL

MODEL CODES

16=Cherokee 2 Dr.(1981-83)
17=Cherokee 2 Dr.(1981-83)
73=Cherokee 2WD-2 Dr.(1984-86)
74=Cherokee 2WD-4 Dr.(1984-86)
18=Cherokee 4 Dr.(1981-83)
77=Cherokee 4WD-2 Dr.(1984-86)
78=Cherokee 4WD-4 Dr.(1984-86)
85=CJ-5 (1981-83)
86=CJ-6(1981)
87=CJ-7(1981-86)
88=CJ-8, Scrambler(1981-86)
64=Comanche 2WD-6 Ft. Box(1986)
66=Comanche 2WD-7 Ft. Box(1986)
63=Comanche 4WD-6 Ft. Box(1986)
65=Comanche 4WD-7 Ft. Box(1986)
15=Grand Wagoneer 4 Dr.(1984-86)
25=J-10 Truck 7 Ft. Box(1981-84)
26=J10 Truck 8 Ft. Box(1981-86)
27=J-20 Truck 8 Ft. Box(1981-86)
15=Wagoneer 4 Dr.(1981-83)
75=Wagoneer 4WD-4 Dr.(1984-86)

BODY
CJ=CJ-5, CJ-6, CJ-7, CJ-8, Scrambler(1981-86)
MJ=Comanche Pickup(1986)

STYLES
SJ=Wagoneer(1981-83), Grand Wagoneer(1984-86), Cherokee(1981-83), J-10, J-20(1981-86)
XJ=Wagoneer(1984-86), Cherokee(1984-86)

AR = Use as Required - = Non Illustrated Part P.A.R. = Paint as Required

HOUSING, FRONT AXLE FOUR WHEEL DRIVE WITH DISCONNECT XJ CHEROKEE, XJ WAGONEER, COMANCHE
Figure 2-1600

81J02 1600

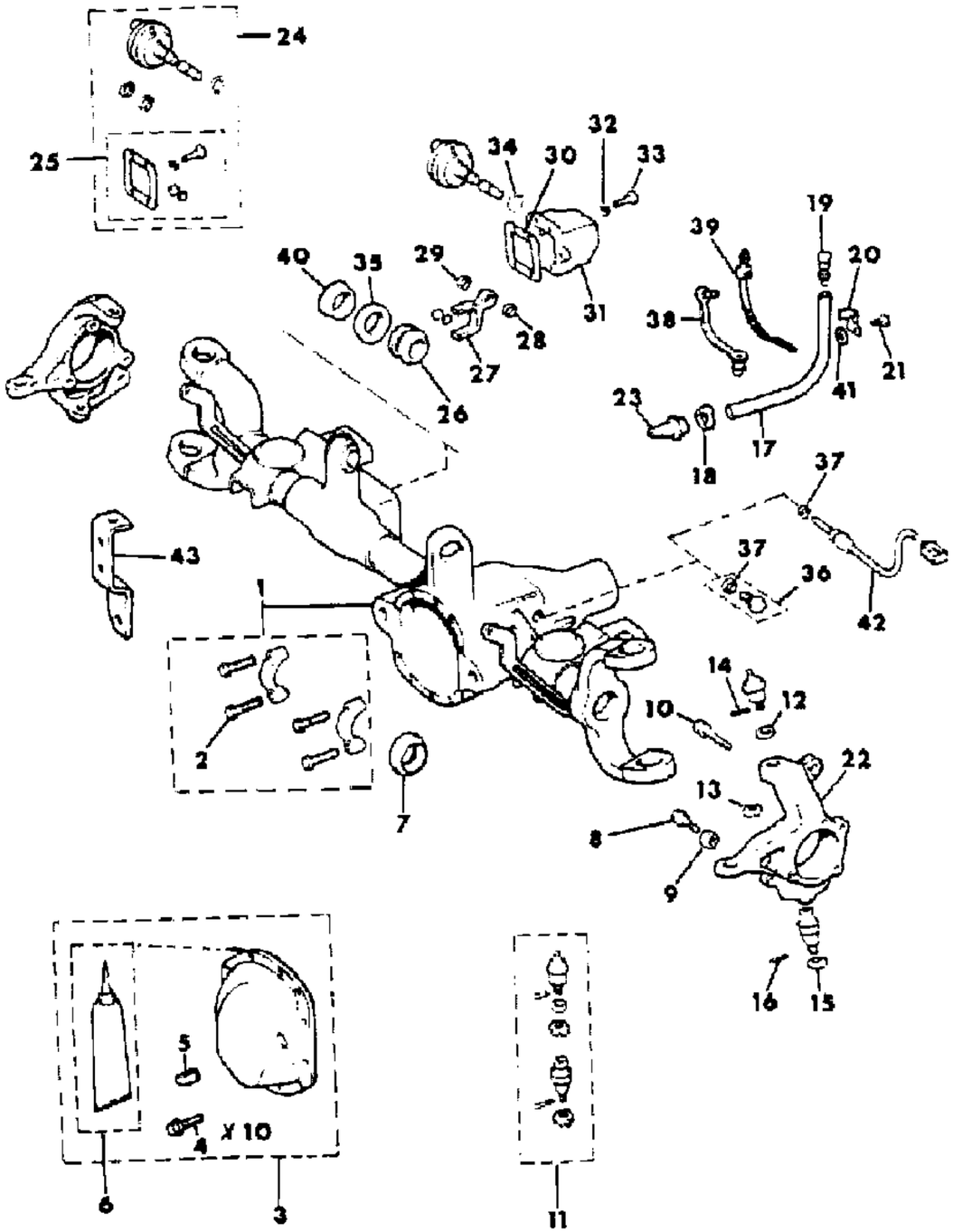

ITEM	PART NUMBER	QTY	BODY	MODEL	DESCRIPTION
	8350 0199	1			2.290" O.D.
	8350 3504	1			2.125" O.D.
36	8350 0271	1			PLUG PACKAGE ***
37	3300 0322	1			GASKET
38	J400 1712	1			STRAP
39	3420 1788	2			STRAP
40	8350 0200	1			GUIDE, Axle Shaft
41	J400 3084	1			PUSHNUT ***
42	5300 0376	1			SENSOR, System Sentry
43	5300 1441	1			BRACKET

MODEL CODES

16=Cherokee 2 Dr.(1981-83)	78=Cherokee 4WD-4 Dr.(1984-86)	64=Comanche 2WD-6 Ft. Box(1986)	25=J-10 Truck 7 Ft. Box(1981-84)
17=Cherokee 2 Dr.(1981-83)	85=CJ-5 (1981-83)	66=Comanche 2WD-7 Ft. Box(1986)	26=J10 Truck 8 Ft. Box(1981-86)
73=Cherokee 2WD-2 Dr.(1984-86)	86=CJ-6(1981)	63=Comanche 4WD-6 Ft. Box(1986)	27=J-20 Truck 8 Ft. Box(1981-86)
74=Cherokee 2WD-4 Dr.(1984-86)	87=CJ-7(1981-86)	65=Comanche 4WD-7 Ft. Box(1986)	15=Wagoneer 4 Dr.(1981-83)
18=Cherokee 4 Dr.(1981-83)	88=CJ-8, Scrambler(1981-86)	15=Grand Wagoneer 4 Dr.(1984-86)	75=Wagoneer 4WD-4 Dr.(1984-86)
77=Cherokee 4WD-2 Dr.(1984-86)			

BODY
CJ=CJ-5, CJ-6, CJ-7, CJ-8, Scrambler(1981-86)
MJ=Comanche Pickup(1986)

STYLES
SJ=Wagoneer(1981-83), Grand Wagoneer(1984-86), Cherokee(1981-83), J-10, J-20(1981-86)
XJ=Wagoneer(1984-86), Cherokee(1984-86)

AR = Use as Required - = Non Illustrated Part P.A.R. = Paint as Required

« RETURN TO GROUP INDEX

HOUSING, FRONT AXLE TWO WHEEL DRIVE XJ CHEROKEE, XJ WAGONEER, COMANCHE
Figure 2-1700

81J02 1700

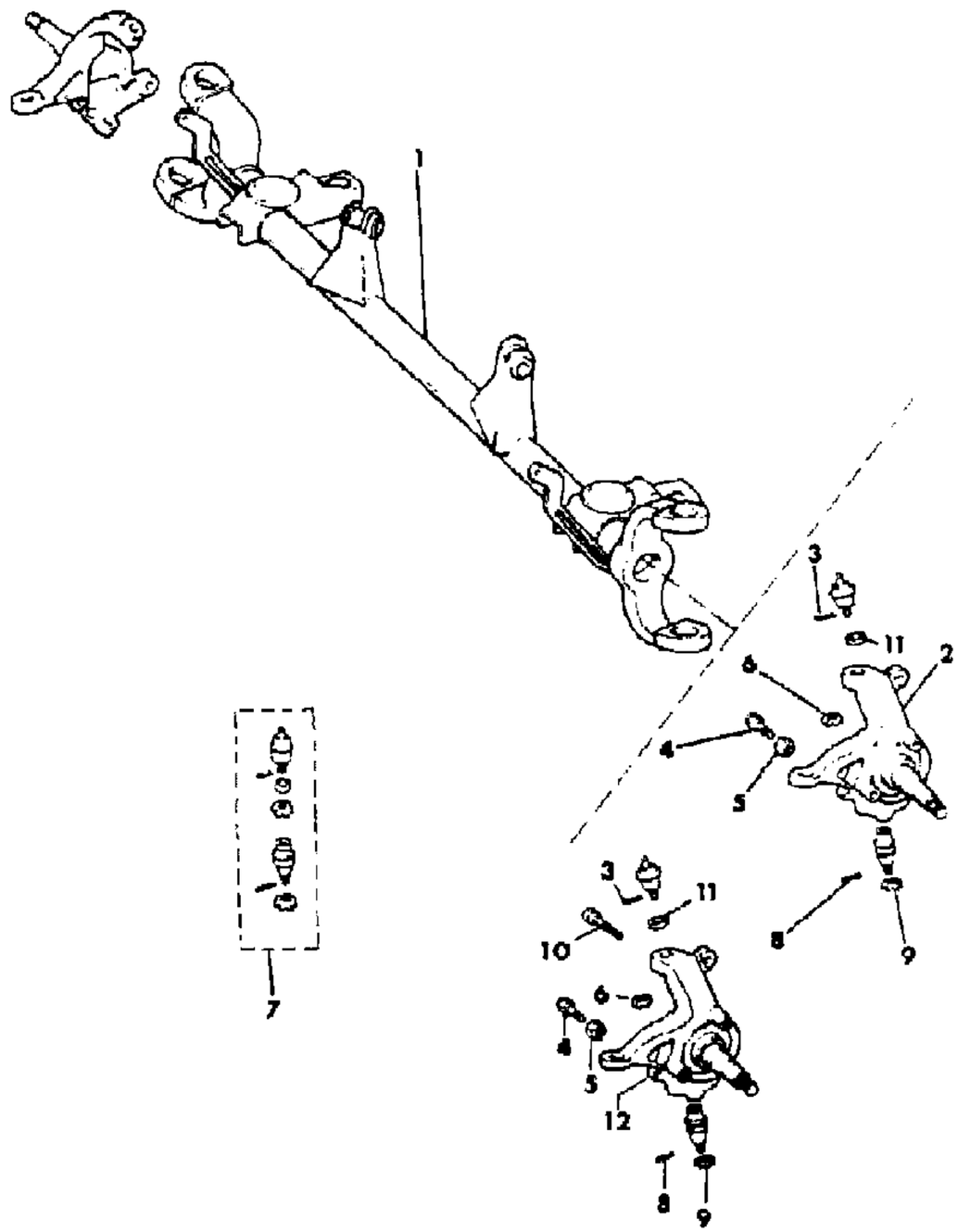

ITEM	PART NUMBER	QTY	BODY	MODEL	DESCRIPTION
1	8350 2081	1			HOUSING, Front Axle
2					KNUCKLE, Steering
	5300 2932	1			Right
	5300 2931	1			Left
3	J812 1392	2			PIN, Cotter
4	JA00 0821	2			BOLT
5	S011 4494	2			NUT
6	J012 5258	2			NUT
7	8350 0202	2			SOCKET PACKAGE ***
8	1101 0069	2			PIN, Cotter
9	J812 3318	2			NUT
10	3420 1535	2			BOLT
11	8350 0203	2			RING, Split
12					KNUCKLE, Steering
12	5300 0626	1			Right
	5300 0625	1			Left

MODEL CODES

16=Cherokee 2 Dr.(1981-83)	78=Cherokee 4WD-4 Dr.(1984-86)	64=Comanche 2WD-6 Ft. Box(1986)	25=J-10 Truck 7 Ft. Box(1981-84)
17=Cherokee 2 Dr.(1981-83)	85=CJ-5 (1981-83)	66=Comanche 2WD-7 Ft. Box(1986)	26=J10 Truck 8 Ft. Box(1981-86)
73=Cherokee 2WD-2 Dr.(1984-86)	86=CJ-6(1981)	63=Comanche 4WD-6 Ft. Box(1986)	27=J-20 Truck 8 Ft. Box(1981-86)
74=Cherokee 2WD-4 Dr.(1984-86)	87=CJ-7(1981-86)	65=Comanche 4WD-7 Ft. Box(1986)	15=Wagoneer 4 Dr.(1981-83)
18=Cherokee 4 Dr.(1981-83)	88=CJ-8, Scrambler(1981-86)	15=Grand Wagoneer 4 Dr.(1984-86)	75=Wagoneer 4WD-4 Dr.(1984-86)
77=Cherokee 4WD-2 Dr.(1984-86)			

BODY
CJ=CJ-5, CJ-6, CJ-7, CJ-8, Scrambler(1981-86)
MJ=Comanche Pickup(1986)

STYLES
SJ=Wagoneer(1981-83), Grand Wagoneer(1984-86), Cherokee(1981-83), J-10, J-20(1981-86)
XJ=Wagoneer(1984-86), Cherokee(1984-86)

AR = Use as Required - = Non Illustrated Part P.A.R. = Paint as Required

« RETURN TO GROUP INDEX

DIFFERENTIAL, FRONT AXLE XJ CHEROKEE, XJ WAGONEER COMANCHE
Figure 2-1800

81J02 1800

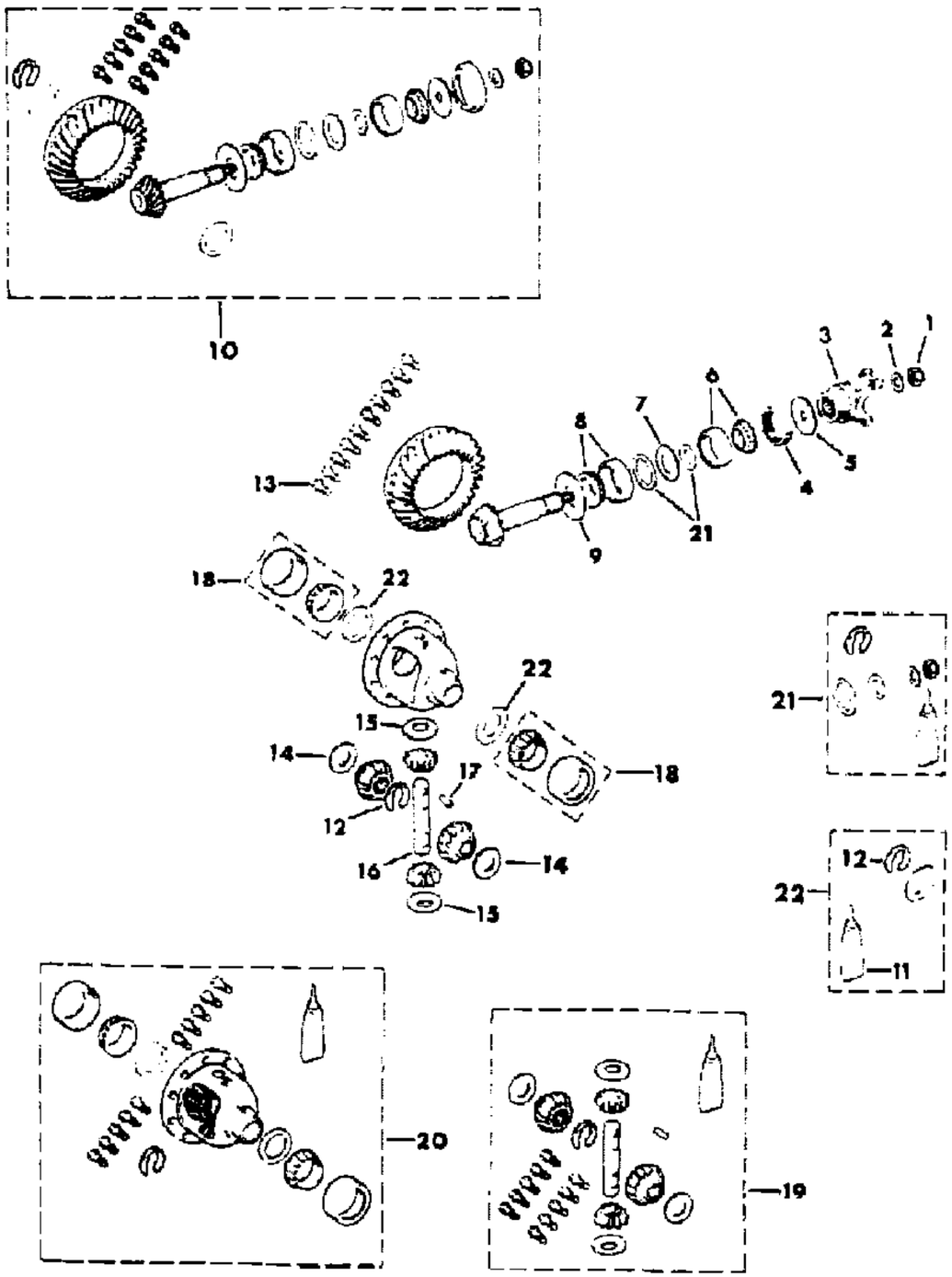

ITEM	PART NUMBER	QTY	BODY	MODEL	DESCRIPTION
1	J080 1367	1			NUT, Pinion
2	J063 6570	1			WASHER
3					YOKE, Pinion
	J813 3241	1			1984-86: With Dust Slinger on Yoke
	8350 3388	1			1986: Without Dust Slinger on Yoke
4					SEAL, Pinion
	J099 8092	1			1984-86: With Dust Slinger on Yoke
	8350 3390	1			1986: Without Dust Slinger on Yoke
5	J063 6566	1			SLINGER, Dust
6	J812 4052	1			BEARING PACKAGE, Outer
7	J093 4937	1			BAFFLE ***
8	J812 6499	1			BEARING PACKAGE, Inner
9	J091 6372	1			SLINGER, Oil
10					GEAR SET, Front Axle Ring and Pinion
	8350 0187	1			3.07 Ratio
	8350 0188	1			3.31 Ratio
	8350 2355	1			3.54 Ratio
	8350 4206	1			3.55 Ratio
	8350 0189	1			3.73 Ratio
	8350 2353	1			4.10 Ratio
	8350 3424	1			4.56 Ratio
11	J899 3317	1			SEALER ***
12	J813 0763	1			RING, Snap
13	J064 9454	10			BOLT
14	J813 3724	2			WASHER, Side Gear
15	J812 0831	2			WASHER, Pinion Gear
16	J094 6384	1			SHAFT
17	J063 6360	1			PIN
18	J812 6500	1			BEARING PACKAGE, Case
19	8350 0190	1			GEAR SET, Front Axle Differential
20					CASE ASSEMBLY ***
	8350 0168	1			3.07, 3.31, 3.54, 3.55 Ratios
	8350 0169	1			3.73, 4.10, 4.56 Ratios
21	8350 0192	1			SHIM PACKAGE (13), Pinion ***
22	8350 0191	1			SHIM PACKAGE (8), Case ***

MODEL CODES

16=Cherokee 2 Dr.(1981-83)
17=Cherokee 2 Dr.(1981-83)
73=Cherokee 2WD-2 Dr.(1984-86)
74=Cherokee 2WD-4 Dr.(1984-86)
18=Cherokee 4 Dr.(1981-83)
77=Cherokee 4WD-2 Dr.(1984-86)
78=Cherokee 4WD-4 Dr.(1984-86)
85=CJ-5 (1981-83)
86=CJ-6(1981)
87=CJ-7(1981-86)
88=CJ-8, Scrambler(1981-86)
64=Comanche 2WD-6 Ft. Box(1986)
66=Comanche 2WD-7 Ft. Box(1986)
63=Comanche 4WD-6 Ft. Box(1986)
65=Comanche 4WD-7 Ft. Box(1986)
15=Grand Wagoneer 4 Dr.(1984-86)
25=J-10 Truck 7 Ft. Box(1981-84)
26=J10 Truck 8 Ft. Box(1981-86)
27=J-20 Truck 8 Ft. Box(1981-86)
15=Wagoneer 4 Dr.(1981-83)
75=Wagoneer 4WD-4 Dr.(1984-86)

BODY
CJ=CJ-5, CJ-6, CJ-7, CJ-8, Scrambler(1981-86)
MJ=Comanche Pickup(1986)

STYLES
SJ=Wagoneer(1981-83), Grand Wagoneer(1984-86), Cherokee(1981-83), J-10, J-20(1981-86)
XJ=Wagoneer(1984-86), Cherokee(1984-86)

AR = Use as Required - = Non Illustrated Part P.A.R. = Paint as Required

« RETURN TO GROUP INDEX

SHAFTS, FRONT AXLE WITHOUT DISCONNECT, WITH CARDAN XJ CHEROKEE, XJ WAGONEER, COMANCHE
Figure 2-1900

81J02 1900

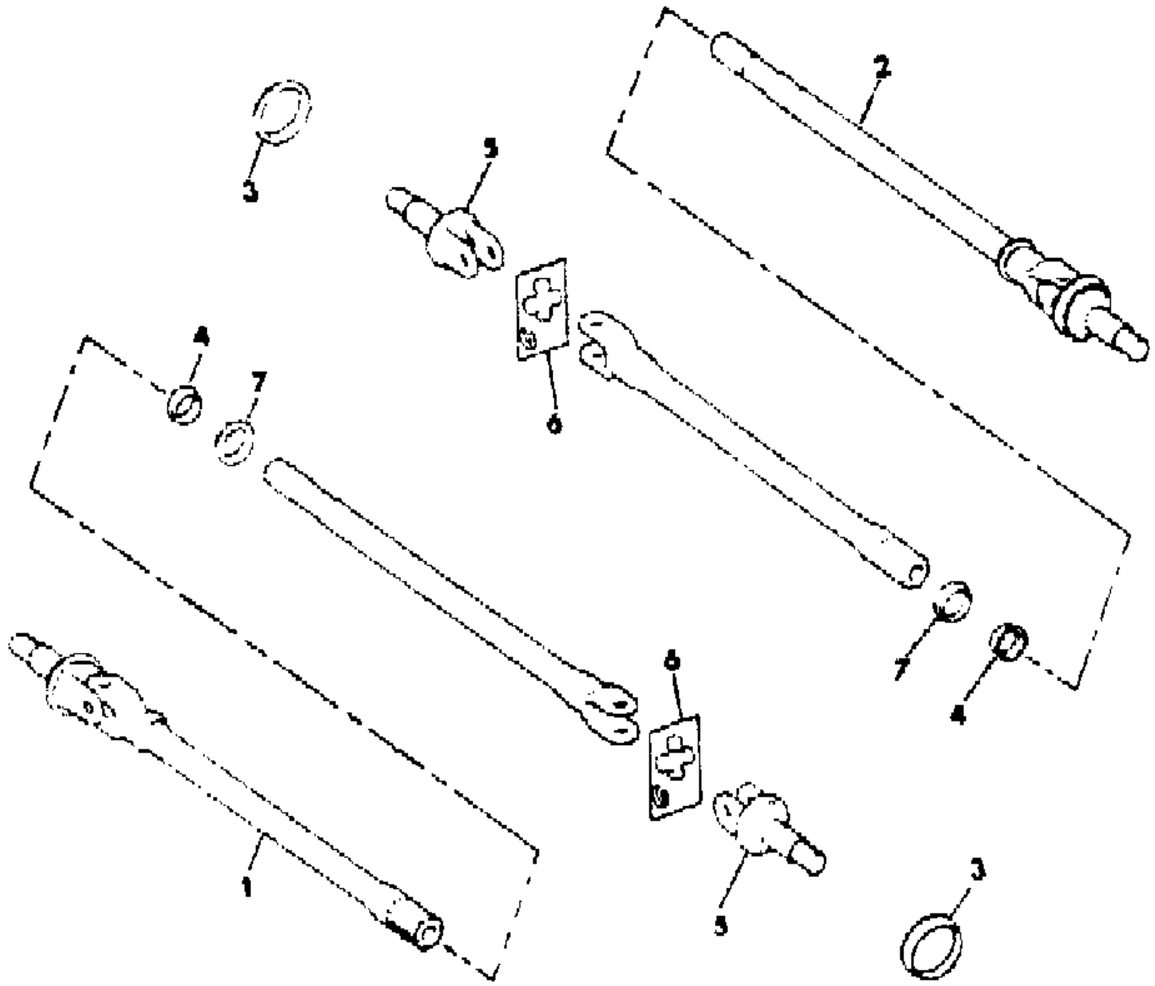

ITEM	PART NUMBER	QTY	BODY	MODEL	DESCRIPTION
1	5300 2134	1			SHAFT, Axle, Right
2	5300 0684	1			SHAFT, Axle, Left
3	8350 0201	2			SLINGER, Dust
4	J812 1781	2			SEAL
5	8350 0184	2			SHAFT, Outer
6	J812 6637	2			SPIDER ASSEMBLY ***
7	J812 6232	2			SLINGER, Oil

MODEL CODES

16=Cherokee 2 Dr.(1981-83)	78=Cherokee 4WD-4 Dr.(1984-86)	64=Comanche 2WD-6 Ft. Box(1986)	25=J-10 Truck 7 Ft. Box(1981-84)
17=Cherokee 2 Dr.(1981-83)	85=CJ-5 (1981-83)	66=Comanche 2WD-7 Ft. Box(1986)	26=J10 Truck 8 Ft. Box(1981-86)
73=Cherokee 2WD-2 Dr.(1984-86)	86=CJ-6(1981)	63=Comanche 4WD-6 Ft. Box(1986)	27=J-20 Truck 8 Ft. Box(1981-86)
74=Cherokee 2WD-4 Dr.(1984-86)	87=CJ-7(1981-86)	65=Comanche 4WD-7 Ft. Box(1986)	15=Wagoneer 4 Dr.(1981-83)
18=Cherokee 4 Dr.(1981-83)	88=CJ-8, Scrambler(1981-86)	15=Grand Wagoneer 4 Dr.(1984-86)	75=Wagoneer 4WD-4 Dr.(1984-86)
77=Cherokee 4WD-2 Dr.(1984-86)			

BODY
CJ=CJ-5, CJ-6, CJ-7, CJ-8, Scrambler(1981-86)
MJ=Comanche Pickup(1986)

STYLES
SJ=Wagoneer(1981-83), Grand Wagoneer(1984-86), Cherokee(1981-83), J-10, J-20(1981-86)
XJ=Wagoneer(1984-86), Cherokee(1984-86)

AR = Use as Required - = Non Illustrated Part P.A.R. = Paint as Required

« RETURN TO GROUP INDEX

SHAFTS, FRONT AXLE WITHOUT DISCONNECT, WITH CONSTANT VELOCITY XJ CHEROKEE, XJ WAGONEER, COMANCHE
Figure 2-2000

81J02 2000

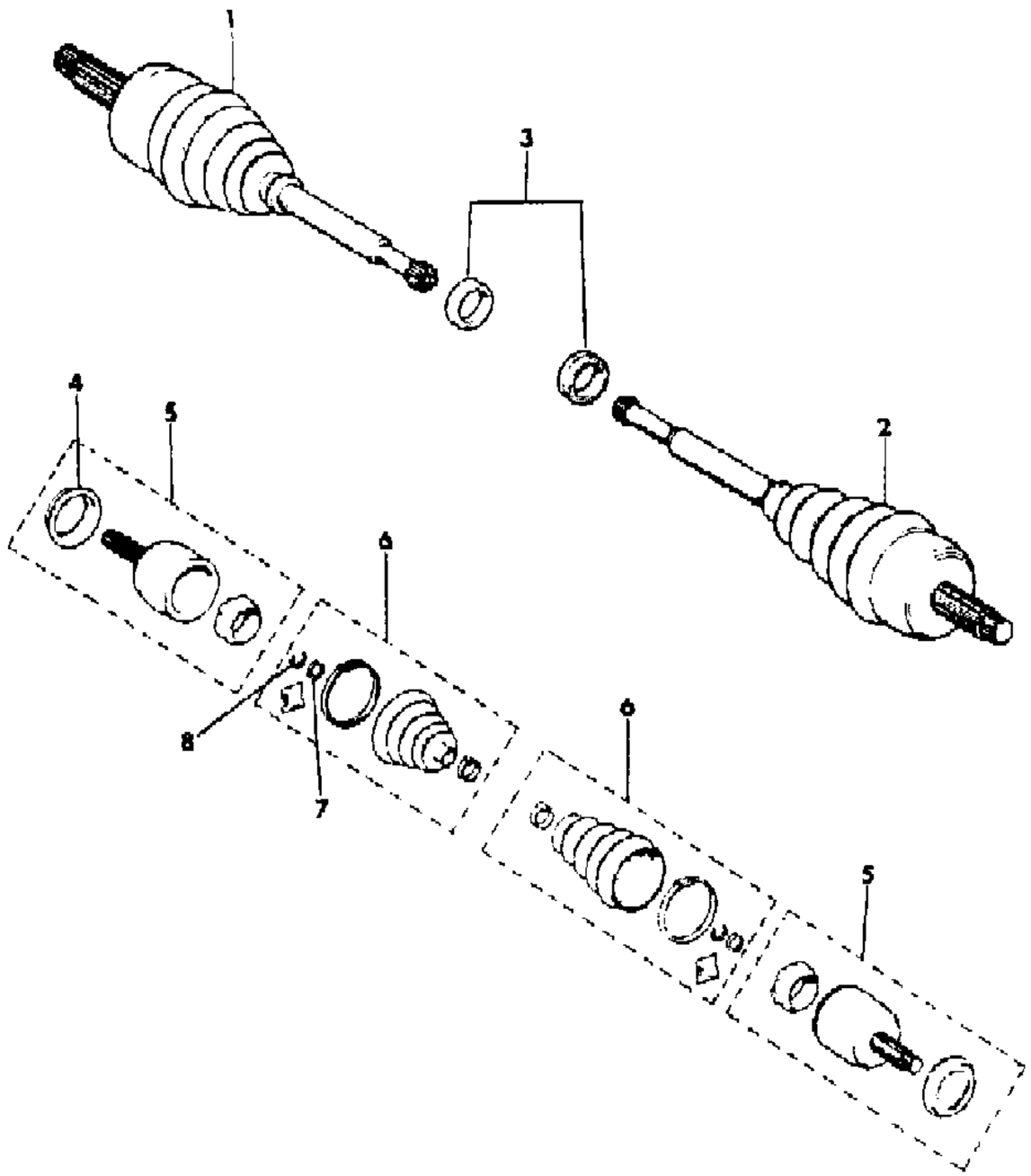

ITEM	PART NUMBER	QTY	BODY	MODEL	DESCRIPTION
1	5300 2128	1			SHAFT, Axle, Right
2	5300 0227	1			SHAFT, Axle, Left
3	J812 1781	2			SEAL
4	8350 0201	2			SLINGER, Dust
5	8350 0696	2			JOINT ASSEMBLY
6	8350 0698	2			BOOT PACKAGE
7	8350 0699	2			RING, Spacer
8	8350 0697	2			RING, Retaining

MODEL CODES

16=Cherokee 2 Dr.(1981-83)
17=Cherokee 2 Dr.(1981-83)
73=Cherokee 2WD-2 Dr.(1984-86)
74=Cherokee 2WD-4 Dr.(1984-86)
18=Cherokee 4 Dr.(1981-83)
77=Cherokee 4WD-2 Dr.(1984-86)
78=Cherokee 4WD-4 Dr.(1984-86)
85=CJ-5 (1981-83)
86=CJ-6(1981)
87=CJ-7(1981-86)
88=CJ-8, Scrambler(1981-86)
64=Comanche 2WD-6 Ft. Box(1986)
66=Comanche 2WD-7 Ft. Box(1986)
63=Comanche 4WD-6 Ft. Box(1986)
65=Comanche 4WD-7 Ft. Box(1986)
15=Grand Wagoneer 4 Dr.(1984-86)
25=J-10 Truck 7 Ft. Box(1981-84)
26=J10 Truck 8 Ft. Box(1981-86)
27=J-20 Truck 8 Ft. Box(1981-86)
15=Wagoneer 4 Dr.(1981-83)
75=Wagoneer 4WD-4 Dr.(1984-86)

BODY
CJ=CJ-5, CJ-6, CJ-7, CJ-8, Scrambler(1981-86)
MJ=Comanche Pickup(1986)

STYLES
SJ=Wagoneer(1981-83), Grand Wagoneer(1984-86), Cherokee(1981-83), J-10, J-20(1981-86)
XJ=Wagoneer(1984-86), Cherokee(1984-86)

AR = Use as Required - = Non Illustrated Part P.A.R. = Paint as Required

« RETURN TO GROUP INDEX

SHAFTS, FRONT AXLE WITH DISCONNECT, WITH CARDAN XJ CHEROKEE, XJ WAGONEER, COMANCHE
Figure 2-2100

81J02 2100

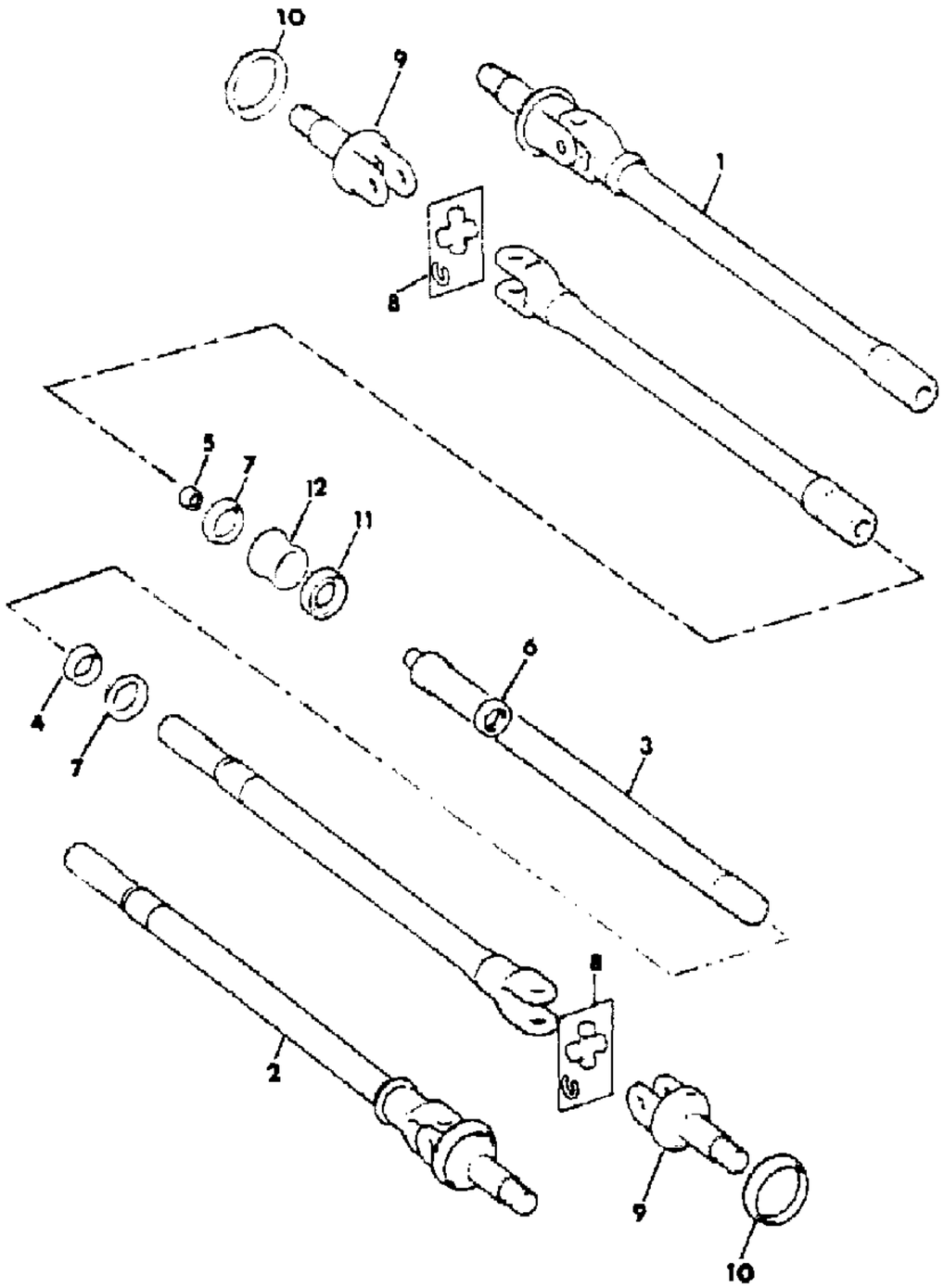

ITEM	PART NUMBER	QTY	BODY	MODEL	DESCRIPTION
1	5300 0224	1			SHAFT, Axle, Right
2	5300 0684	1			SHAFT, Axle, Left
3	8350 0198	1			SHAFT, Intermediate
4	J812 1781	1			SEAL
5	J813 4213	1			BEARING
6	J813 3622	1			BEARING
7	J812 6232	2			SLINGER, Oil
8	J812 6637	2			SPIDER ASSEMBLY ***
9	8350 0184	2			SHAFT, Outer
10	8350 0201	2			SLINGER, Dust
11					SEAL
	8350 0199	1			2.290" O.D.
	8350 3504	1			2.125" O.D.
12	8350 0200	1			GUIDE, Axle Shaft

MODEL CODES

16=Cherokee 2 Dr.(1981-83)
17=Cherokee 2 Dr.(1981-83)
73=Cherokee 2WD-2 Dr.(1984-86)
74=Cherokee 2WD-4 Dr.(1984-86)
18=Cherokee 4 Dr.(1981-83)
77=Cherokee 4WD-2 Dr.(1984-86)
78=Cherokee 4WD-4 Dr.(1984-86)
85=CJ-5 (1981-83)
86=CJ-6(1981)
87=CJ-7(1981-86)
88=CJ-8, Scrambler(1981-86)
64=Comanche 2WD-6 Ft. Box(1986)
66=Comanche 2WD-7 Ft. Box(1986)
63=Comanche 4WD-6 Ft. Box(1986)
65=Comanche 4WD-7 Ft. Box(1986)
15=Grand Wagoneer 4 Dr.(1984-86)
25=J-10 Truck 7 Ft. Box(1981-84)
26=J10 Truck 8 Ft. Box(1981-86)
27=J-20 Truck 8 Ft. Box(1981-86)
15=Wagoneer 4 Dr.(1981-83)
75=Wagoneer 4WD-4 Dr.(1984-86)

BODY
CJ=CJ-5, CJ-6, CJ-7, CJ-8, Scrambler(1981-86)
MJ=Comanche Pickup(1986)

STYLES
SJ=Wagoneer(1981-83), Grand Wagoneer(1984-86), Cherokee(1981-83), J-10, J-20(1981-86)
XJ=Wagoneer(1984-86), Cherokee(1984-86)

AR = Use as Required - = Non Illustrated Part P.A.R. = Paint as Required

« RETURN TO GROUP INDEX

SHAFTS, FRONT AXLE WITH DISCONNECT, WITH CONSTANT VELOCITY XJ CHEROKEE, XJ WAGONEER, COMANCHE
Figure 2-2200

81J02 2200

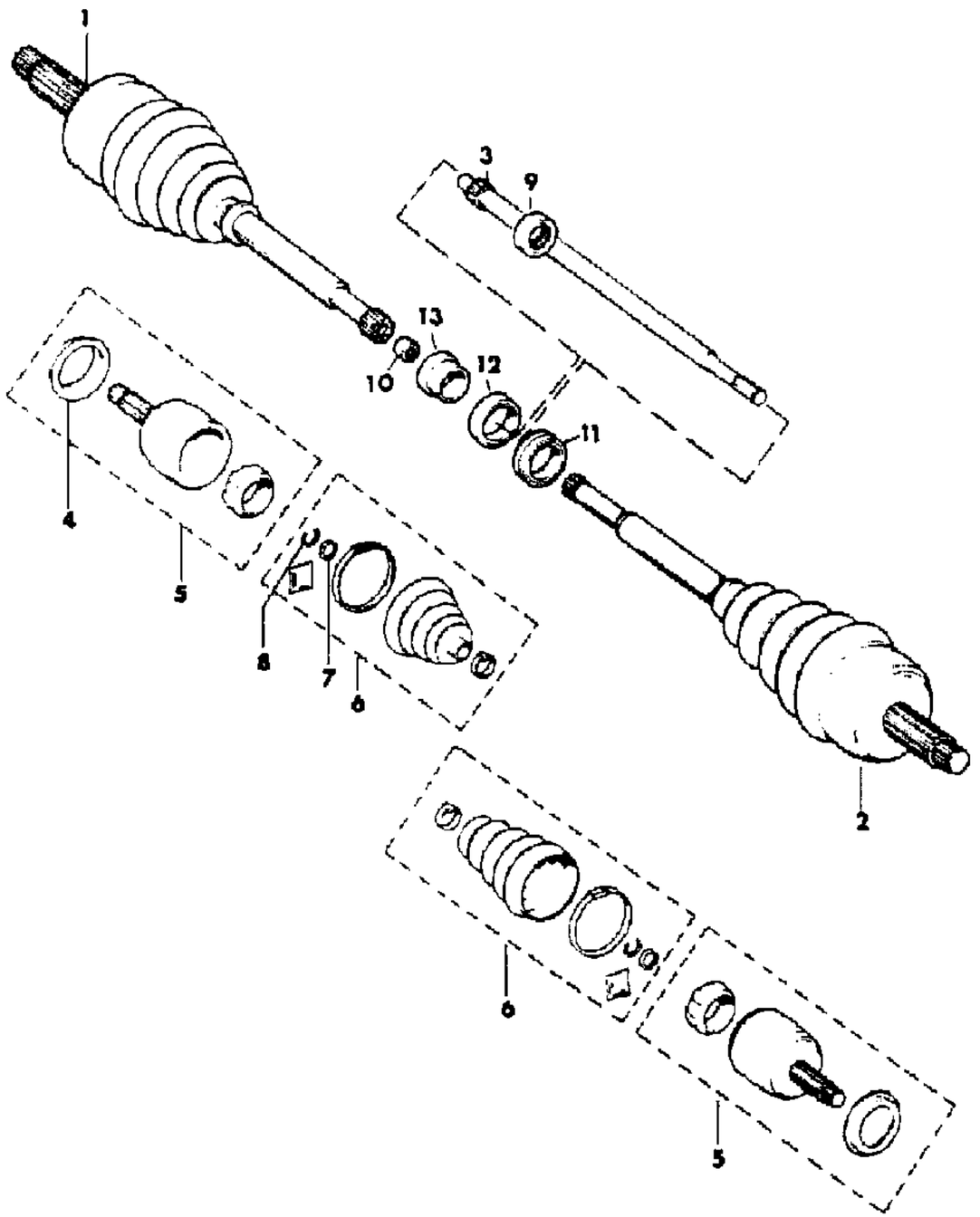

ITEM	PART NUMBER	QTY	BODY	MODEL	DESCRIPTION
1	5300 0686	1			SHAFT, Axle, Right
2	5300 0227	1			SHAFT, Axle, Left
3	8350 0198	1			SHAFT, Intermediate
4	8350 0201	2			SLINGER
5	8350 0696	2			SPIDER ASSEMBLY ***
6	8350 0698	2			BOOT PACKAGE
7	8350 0699	2			RING, Snap
8	8350 0697	2			RING, Retaining
9	J813 3622	1			BEARING
10	J813 4213	1			BEARING
11	J812 1781	1			SEAL
12	8350 0199	1			SEAL
13	8350 0200	2			GUIDE, Axle Shaft

MODEL CODES

16=Cherokee 2 Dr.(1981-83)
17=Cherokee 2 Dr.(1981-83)
73=Cherokee 2WD-2 Dr.(1984-86)
74=Cherokee 2WD-4 Dr.(1984-86)
18=Cherokee 4 Dr.(1981-83)
77=Cherokee 4WD-2 Dr.(1984-86)
78=Cherokee 4WD-4 Dr.(1984-86)
85=CJ-5 (1981-83)
86=CJ-6(1981)
87=CJ-7(1981-86)
88=CJ-8, Scrambler(1981-86)
64=Comanche 2WD-6 Ft. Box(1986)
66=Comanche 2WD-7 Ft. Box(1986)
63=Comanche 4WD-6 Ft. Box(1986)
65=Comanche 4WD-7 Ft. Box(1986)
15=Grand Wagoneer 4 Dr.(1984-86)
25=J-10 Truck 7 Ft. Box(1981-84)
26=J10 Truck 8 Ft. Box(1981-86)
27=J-20 Truck 8 Ft. Box(1981-86)
15=Wagoneer 4 Dr.(1981-83)
75=Wagoneer 4WD-4 Dr.(1984-86)

BODY
CJ=CJ-5, CJ-6, CJ-7, CJ-8, Scrambler(1981-86)
MJ=Comanche Pickup(1986)

STYLES
SJ=Wagoneer(1981-83), Grand Wagoneer(1984-86), Cherokee(1981-83), J-10, J-20(1981-86)
XJ=Wagoneer(1984-86), Cherokee(1984-86)

AR = Use as Required - = Non Illustrated Part P.A.R. = Paint as Required

« RETURN TO GROUP INDEX

AXLE ASSEMBLY, FRONT SJ CHEROKEE, SJ WAGONEER J10, J20
Figure 2-2300

81J02 2300

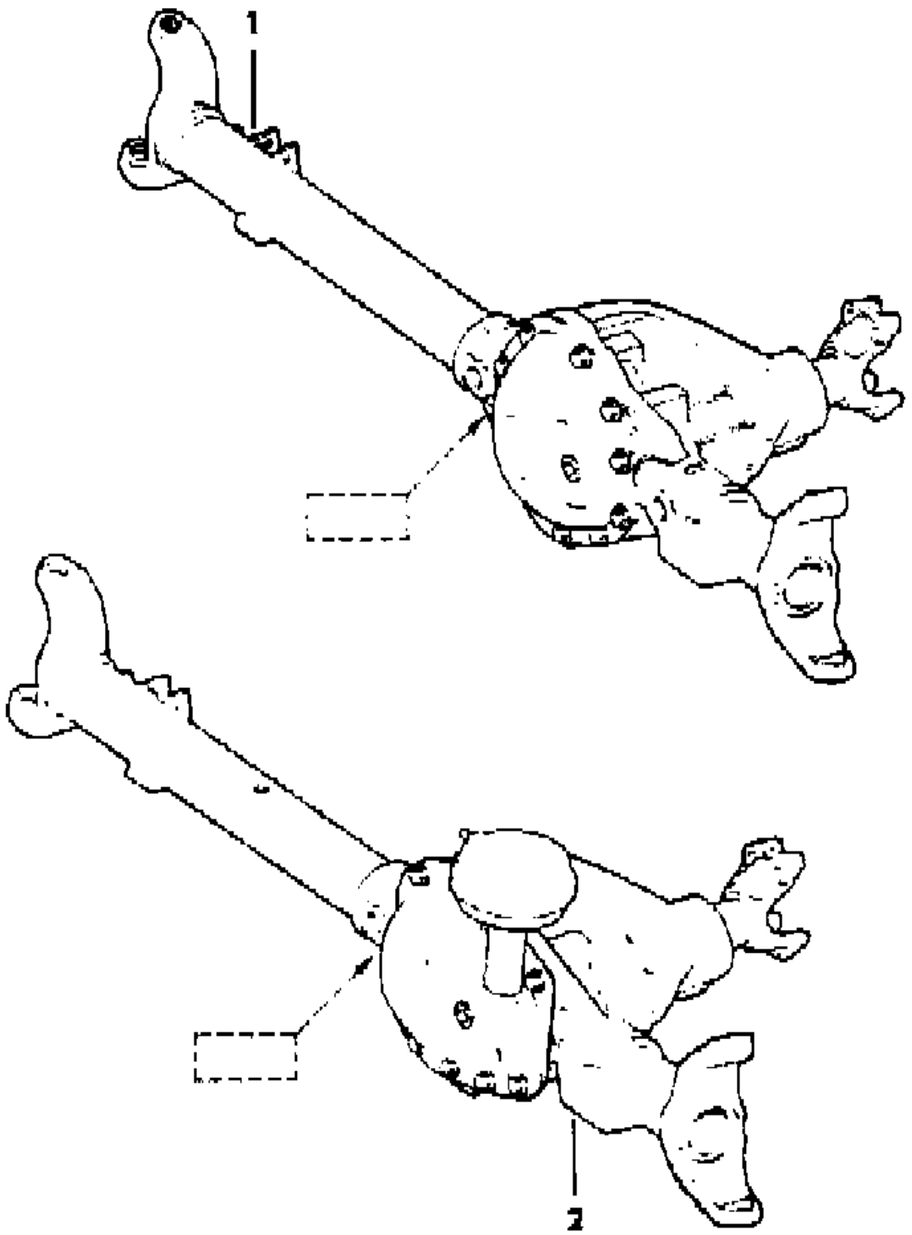

ITEM	PART NUMBER	QTY	BODY	MODEL	DESCRIPTION
1					AXLE ASSEMBLY, Without Disconnect ***
	J813 1913	1		15,16,1	1981-84: 2.73 Ratio, Tagged 5359667
	8350 1402	1		15,16,1	1981-84: 3.31 Ratio, Tagged 5359666
	J813 3596	1		17,25,2	1981-86: 2.73 Ratio, Tagged 5359664, 8953004006 or 8953004207
	J813 3597	1		17,25,2	1981-86: 3.31 Ratio, Tagged 5359663, 8953004007 or 8953004209
	J813 3600	1		27	1981-86: 3.73 Ratio, Tagged 5359661, 8953004010 or 8953004211
	J813 1924	1		27	1981-86: 4.88 Ratio, Tagged 5359670, 8953004011 or 8953004212
	8350 1399	1		15,16,1	1985-86: 2.73 Ratio, Tagged 5365152, 8953004003 or 8953004206
	8350 1402	1		15,16,1	1985-86: 3.31 Ratio, Tagged 5365153, 8953004004 or 8953004208
2					AXLE ASSEMBLY, With Disconnect ***
	J813 4260	1		15,16,1	1982-84: 2.73 Ratio, Tagged 3241253
	J813 4261	1		15,16,1	1982-84: 3.31 Ratio, Tagged 3241255
	J813 4263	1		17,25,2	1982-84: 2.73 Ratio, Tagged 3241254
	J813 4262	1		17,25,2	1982-84: 3.31 Ratio, Tagged 3241256

MODEL CODES

16=Cherokee 2 Dr.(1981-83)
17=Cherokee 2 Dr.(1981-83)
73=Cherokee 2WD-2 Dr.(1984-86)
74=Cherokee 2WD-4 Dr.(1984-86)
18=Cherokee 4 Dr.(1981-83)
77=Cherokee 4WD-2 Dr.(1984-86)
78=Cherokee 4WD-4 Dr.(1984-86)
85=CJ-5 (1981-83)
86=CJ-6(1981)
87=CJ-7(1981-86)
88=CJ-8, Scrambler(1981-86)
64=Comanche 2WD-6 Ft. Box(1986)
66=Comanche 2WD-7 Ft. Box(1986)
63=Comanche 4WD-6 Ft. Box(1986)
65=Comanche 4WD-7 Ft. Box(1986)
15=Grand Wagoneer 4 Dr.(1984-86)
25=J-10 Truck 7 Ft. Box(1981-84)
26=J10 Truck 8 Ft. Box(1981-86)
27=J-20 Truck 8 Ft. Box(1981-86)
15=Wagoneer 4 Dr.(1981-83)
75=Wagoneer 4WD-4 Dr.(1984-86)

BODY

CJ=CJ-5, CJ-6, CJ-7, CJ-8, Scrambler(1981-86)
MJ=Comanche Pickup(1986)

STYLES

SJ=Wagoneer(1981-83), Grand Wagoneer(1984-86), Cherokee(1981-83), J-10, J-20(1981-86)
XJ=Wagoneer(1984-86), Cherokee(1984-86)

AR = Use as Required - = Non Illustrated Part P.A.R. = Paint as Required

« RETURN TO GROUP INDEX

HOUSING, FRONT AXLE WITHOUT DISCONNECT SJ CHEROKEE, SJ WAGONEER, J10, J20
Figure 2-2400

81J02 2400

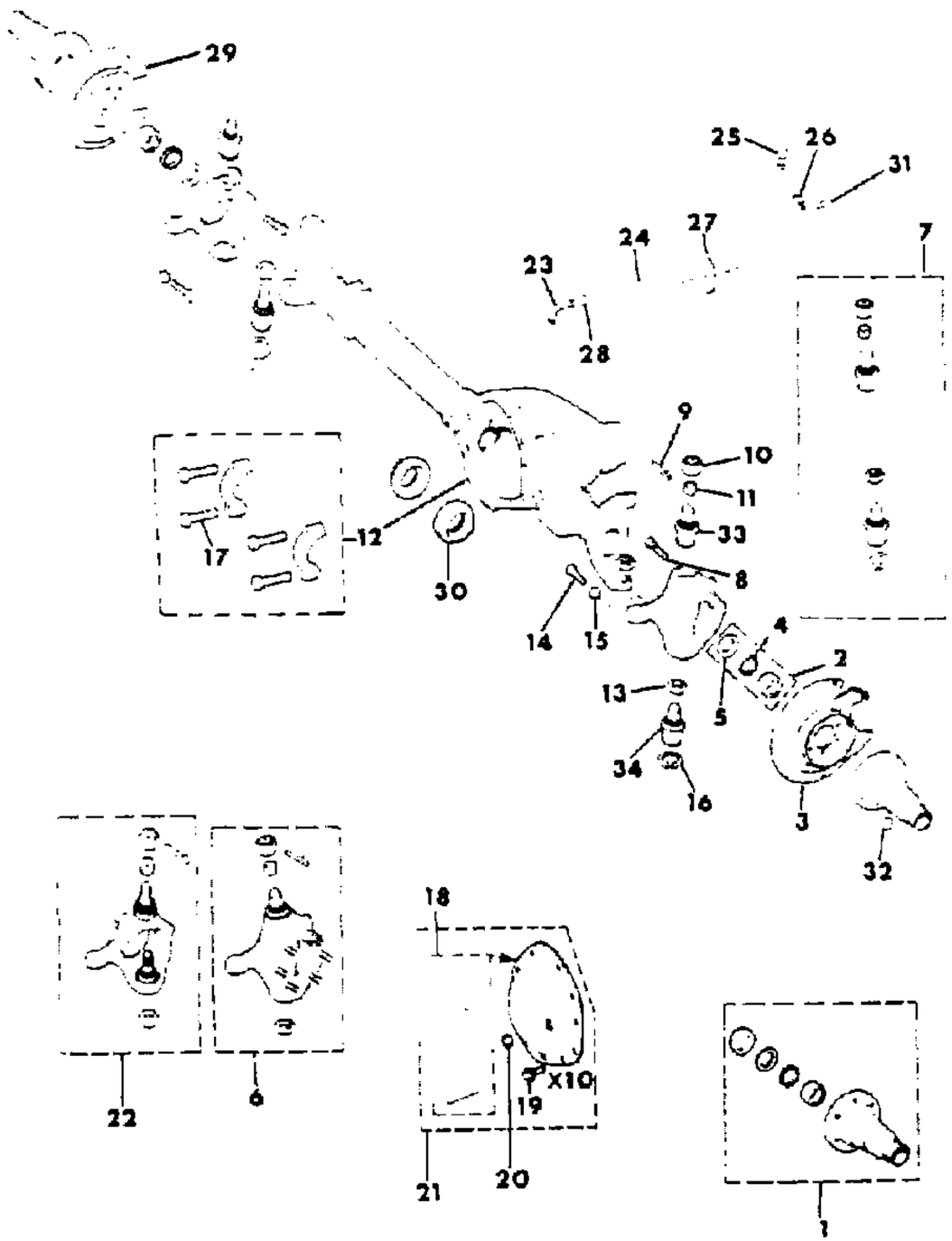

ITEM	PART NUMBER	QTY	BODY	MODEL	DESCRIPTION
1	J812 8767	2			SPINDLE ASSEMBLY ***
2	J812 7356	2			BEARING PACKAGE
3					SHIELD, Splash, Left
	8350 1982	1		15,16,1	
	8350 1982	1		25,26	
	J537 0115	1		27	
4	J812 1397	2			SEAL
5	8350 1113	2			SPACER
6	J812 8611	1			KNUCKLE, Steering, Left
7	J812 4333	2			SOCKET PACKAGE ***
8	J812 4847	12			STUD
9	J812 1392	2			PIN, Cotter
10	J812 1364	2			NUT
11	J812 1365	2			RING, Split
12					HOUSING, Front Axle
	J813 2705	1		15,16,1	1981-84
	8350 1401	1		15	1985-86
	J813 2706	1		17,25,2	1981-86
13	J812 1391	2			NUT
14	JA00 0821	2			BOLT
15	S011 4494	2			NUT
16	J812 4362	2			RING, Snap
17	S017 9890	4			BOLT
18	J899 3317	1			SEALER ***
19	J099 1546	10			BOLT
20	S010 3869	1			PLUG
21	J812 4352	1			COVER PACKAGE
22	J812 8610	1			KNUCKLE, Steering, Right
23	J535 3495	1			VENT
24	J812 5823	1			HOSE, Bulk
25	J535 2955	1			BREATHER ***
26	J014 0780	1			CLIP
27	J322 3227	1			STRAP
28	J322 7851	1			CLAMP
29					SHIELD, Splash, Right
	8350 1982	1		15,16,1	
	8350 1982	1		25,26	
	J537 0116	1		27	
30					SEAL

MODEL CODES
16=Cherokee 2 Dr.(1981-83)
17=Cherokee 2 Dr.(1981-83)
73=Cherokee 2WD-2 Dr.(1984-86)
74=Cherokee 2WD-4 Dr.(1984-86)
18=Cherokee 4 Dr.(1981-83)
77=Cherokee 4WD-2 Dr.(1984-86)
78=Cherokee 4WD-4 Dr.(1984-86)
85=CJ-5 (1981-83)
86=CJ-6(1981)
87=CJ-7(1981-86)
88=CJ-8, Scrambler(1981-86)
64=Comanche 2WD-6 Ft. Box(1986)
66=Comanche 2WD-7 Ft. Box(1986)
63=Comanche 4WD-6 Ft. Box(1986)
65=Comanche 4WD-7 Ft. Box(1986)
15=Grand Wagoneer 4 Dr.(1984-86)
25=J-10 Truck 7 Ft. Box(1981-84)
26=J10 Truck 8 Ft. Box(1981-86)
27=J-20 Truck 8 Ft. Box(1981-86)
15=Wagoneer 4 Dr.(1981-83)
75=Wagoneer 4WD-4 Dr.(1984-86)

BODY
CJ=CJ-5, CJ-6, CJ-7, CJ-8, Scrambler(1981-86)
MJ=Comanche Pickup(1986)

STYLES
SJ=Wagoneer(1981-83), Grand Wagoneer(1984-86), Cherokee(1981-83), J-10, J-20(1981-86)
XJ=Wagoneer(1984-86), Cherokee(1984-86)

AR = Use as Required - = Non Illustrated Part P.A.R. = Paint as Required

HOUSING, FRONT AXLE WITHOUT DISCONNECT SJ CHEROKEE, SJ WAGONEER, J10, J20
Figure 2-2400

81J02 2400

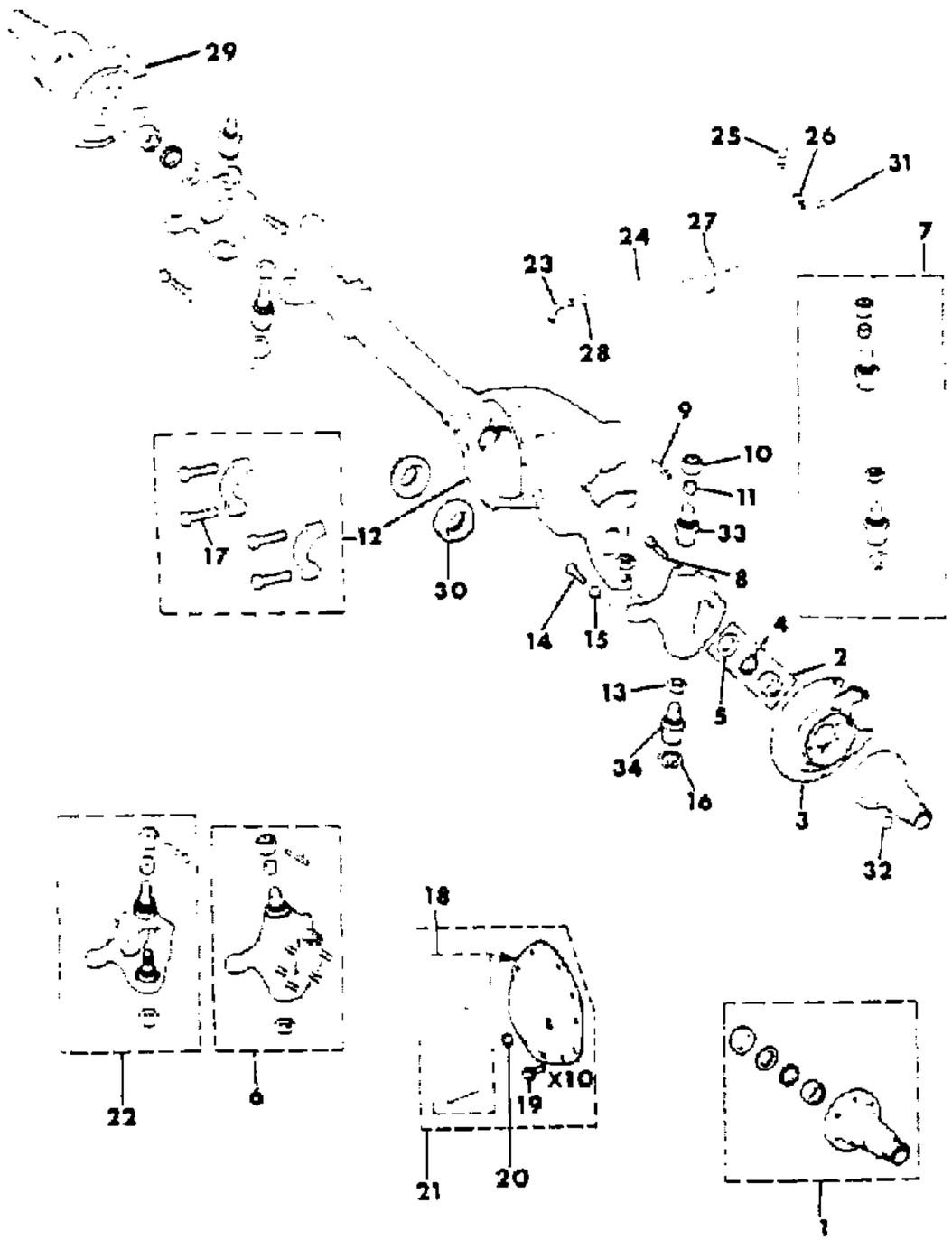

ITEM	PART NUMBER	QTY	BODY	MODEL	DESCRIPTION
	J812 9096	1			2.625" O.D.
	8350 1873	1			2.250" O.D.
31	J400 3556	1			SCREW
32	J941 1783	12			NUT
33	J812 2495	2			SOCKET, Upper
34	J812 2496	2			SOCKET, Lower

MODEL CODES

16=Cherokee 2 Dr.(1981-83)	78=Cherokee 4WD-4 Dr.(1984-86)	64=Comanche 2WD-6 Ft. Box(1986)	25=J-10 Truck 7 Ft. Box(1981-84)
17=Cherokee 2 Dr.(1981-83)	85=CJ-5 (1981-83)	66=Comanche 2WD-7 Ft. Box(1986)	26=J10 Truck 8 Ft. Box(1981-86)
73=Cherokee 2WD-2 Dr.(1984-86)	86=CJ-6(1981)	63=Comanche 4WD-6 Ft. Box(1986)	27=J-20 Truck 8 Ft. Box(1981-86)
74=Cherokee 2WD-4 Dr.(1984-86)	87=CJ-7(1981-86)	65=Comanche 4WD-7 Ft. Box(1986)	15=Wagoneer 4 Dr.(1981-83)
18=Cherokee 4 Dr.(1981-83)	88=CJ-8, Scrambler(1981-86)	15=Grand Wagoneer 4 Dr.(1984-86)	75=Wagoneer 4WD-4 Dr.(1984-86)
77=Cherokee 4WD-2 Dr.(1984-86)			

BODY
CJ=CJ-5, CJ-6, CJ-7, CJ-8, Scrambler(1981-86)
MJ=Comanche Pickup(1986)

STYLES
SJ=Wagoneer(1981-83), Grand Wagoneer(1984-86), Cherokee(1981-83), J-10, J-20(1981-86)
XJ=Wagoneer(1984-86), Cherokee(1984-86)

AR = Use as Required - = Non Illustrated Part P.A.R. = Paint as Required

« RETURN TO GROUP INDEX

HOUSING, FRONT AXLE WITH DISCONNECT SJ CHEROKEE, SJ WAGONEER, J10
Figure 2-2500

81J02 2500

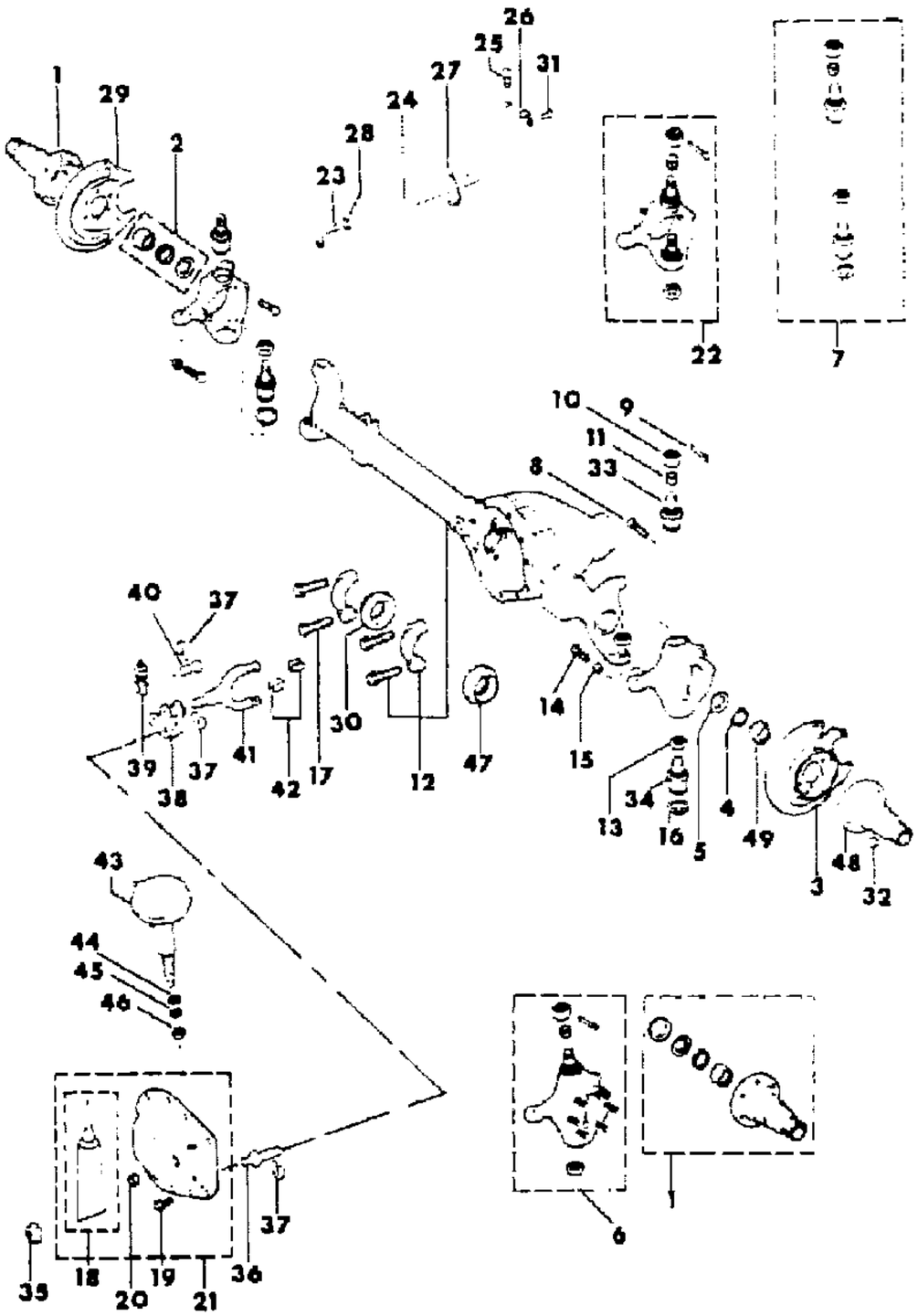

ITEM	PART NUMBER	QTY	BODY	MODEL	DESCRIPTION
1	J812 8767	1			SPINDLE ASSEMBLY, Right ***
2	8350 0950	1			BEARING PACKAGE, Right
3					SHIELD, Splash, Left
	8350 1982	1		15,16,1	
	8350 1982	1		25,26	
4	J812 1397	2			SEAL
5	8350 1113	2			SPACER
6	J812 8611	1			KNUCKLE, Steering, Left
7	J812 4333	2			SOCKET PACKAGE ***
8	J812 4847	12			STUD
9	J812 1392	2			PIN, Cotter
10	J812 1364	2			NUT
11	J812 1365	2			RING, Split
12					HOUSING, Front Axle
	J813 4223	1		15,16,1	
	J813 4220	1		17,25,2	
13	J812 1391	2			NUT
14	JA00 0821	2			BOLT
15	S011 4494	2			NUT
16	J812 4362	2			RING, Snap
17	S017 9890	4			BOLT
18	J899 3317	1			SEALER ***
19	J099 1546	10			BOLT
20	S010 3869	1			PLUG
21	8350 0435	1			COVER PACKAGE
22	J812 8610	1			KNUCKLE, Steering, Right
23	J535 3495	1			VENT
24	J812 5823	1			HOSE, Bulk
25	J535 2955	1			BREATHER ***
26	J014 0780	1			CLIP
27	J322 3227	1			STRAP
28	J322 7851	1			CLAMP
29					SHIELD, Splash, Right
	8350 1982	1		15,16,1	
	8350 1982	1		25,26	
30					SEAL, Inner Axle, Right
	8350 1009	1		15,16,1	
	8350 1873	1		17,25,2	
31	J400 3556	1			SCREW

MODEL CODES
16=Cherokee 2 Dr.(1981-83)
17=Cherokee 2 Dr.(1981-83)
73=Cherokee 2WD-2 Dr.(1984-86)
74=Cherokee 2WD-4 Dr.(1984-86)
18=Cherokee 4 Dr.(1981-83)
77=Cherokee 4WD-2 Dr.(1984-86)
78=Cherokee 4WD-4 Dr.(1984-86)
85=CJ-5 (1981-83)
86=CJ-6(1981)
87=CJ-7(1981-86)
88=CJ-8, Scrambler(1981-86)
64=Comanche 2WD-6 Ft. Box(1986)
66=Comanche 2WD-7 Ft. Box(1986)
63=Comanche 4WD-6 Ft. Box(1986)
65=Comanche 4WD-7 Ft. Box(1986)
15=Grand Wagoneer 4 Dr.(1984-86)
25=J-10 Truck 7 Ft. Box(1981-84)
26=J10 Truck 8 Ft. Box(1981-86)
27=J-20 Truck 8 Ft. Box(1981-86)
15=Wagoneer 4 Dr.(1981-83)
75=Wagoneer 4WD-4 Dr.(1984-86)

BODY
CJ=CJ-5, CJ-6, CJ-7, CJ-8, Scrambler(1981-86)
MJ=Comanche Pickup(1986)

STYLES
SJ=Wagoneer(1981-83), Grand Wagoneer(1984-86), Cherokee(1981-83), J-10, J-20(1981-86)
XJ=Wagoneer(1984-86), Cherokee(1984-86)

AR = Use as Required - = Non Illustrated Part P.A.R. = Paint as Required

« RETURN TO GROUP INDEX »

HOUSING, FRONT AXLE WITH DISCONNECT SJ CHEROKEE, SJ WAGONEER, J10
Figure 2-2500

81J02 2500

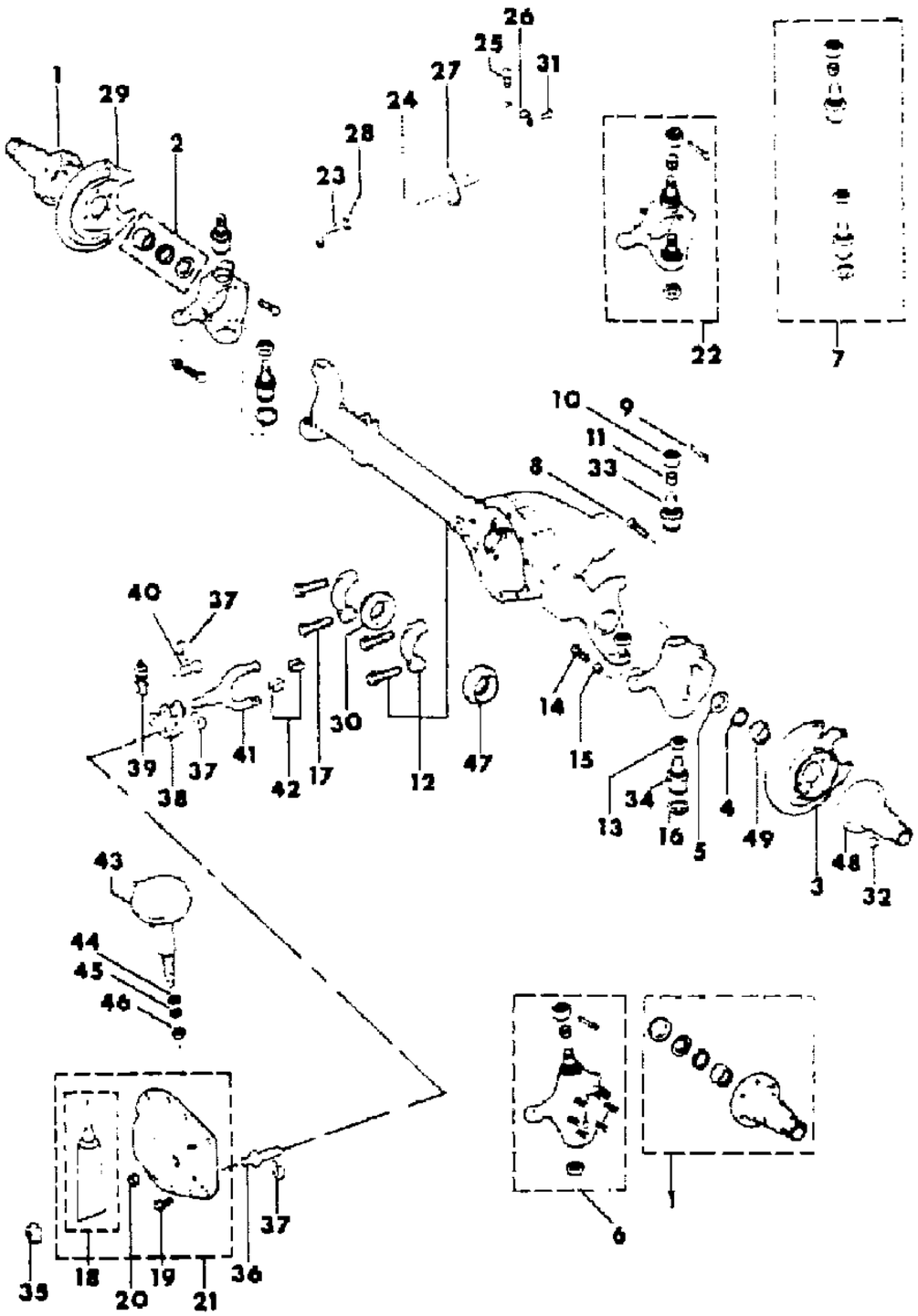

ITEM	PART NUMBER	QTY	BODY	MODEL	DESCRIPTION
32	J941 1783	12			NUT
33	J812 2495	2			SOCKET, Upper
34	J812 2496	2			SOCKET, Lower
35	8350 0443	1			NUT
36	8350 0438	1			PIN
37	8350 0440	1			RING, Snap
38	8350 0437	1			LEVER
39	8350 0441	1			STUD
40	8350 0439	1			PIN
41	8350 0434	1			FORK
42	8350 0436	1			PAD PACKAGE ***
43	J813 4632	1			MOTOR, Vacuum
44	8350 0447	1			SEAL
45	8350 0448	1			WASHER
46	8350 0442	1			NUT
47	J813 4216	1			SEAL, Axle Shaft, Left
48	J813 4218	1			SPINDLE, Left
49	8350 0950	1			SPACER, Left

MODEL CODES

16=Cherokee 2 Dr.(1981-83)
17=Cherokee 2 Dr.(1981-83)
73=Cherokee 2WD-2 Dr.(1984-86)
74=Cherokee 2WD-4 Dr.(1984-86)
18=Cherokee 4 Dr.(1981-83)
77=Cherokee 4WD-2 Dr.(1984-86)
78=Cherokee 4WD-4 Dr.(1984-86)
85=CJ-5 (1981-83)
86=CJ-6(1981)
87=CJ-7(1981-86)
88=CJ-8, Scrambler(1981-86)
64=Comanche 2WD-6 Ft. Box(1986)
66=Comanche 2WD-7 Ft. Box(1986)
63=Comanche 4WD-6 Ft. Box(1986)
65=Comanche 4WD-7 Ft. Box(1986)
15=Grand Wagoneer 4 Dr.(1984-86)
25=J-10 Truck 7 Ft. Box(1981-84)
26=J10 Truck 8 Ft. Box(1981-86)
27=J-20 Truck 8 Ft. Box(1981-86)
15=Wagoneer 4 Dr.(1981-83)
75=Wagoneer 4WD-4 Dr.(1984-86)

BODY
CJ=CJ-5, CJ-6, CJ-7, CJ-8, Scrambler(1981-86)
MJ=Comanche Pickup(1986)

STYLES
SJ=Wagoneer(1981-83), Grand Wagoneer(1984-86), Cherokee(1981-83), J-10, J-20(1981-86)
XJ=Wagoneer(1984-86), Cherokee(1984-86)

AR = Use as Required - = Non Illustrated Part P.A.R. = Paint as Required

« RETURN TO GROUP INDEX

DIFFERENTIAL, FRONT AXLE SJ CHEROKEE, SJ WAGONEER J10, J20
Figure 2-2600

81J02 2600

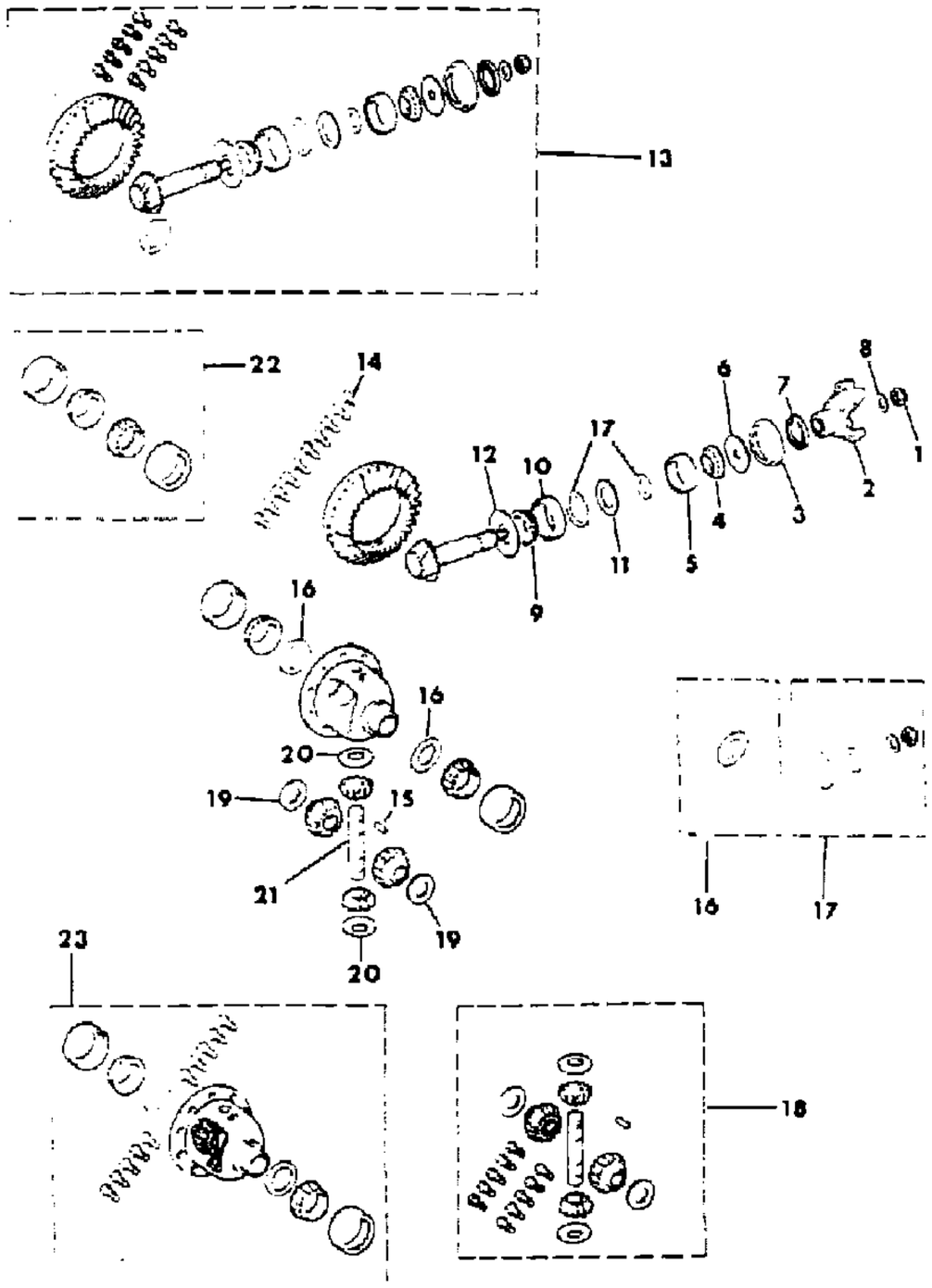

ITEM	PART NUMBER	QTY	BODY	MODEL	DESCRIPTION
1	J080 1367	1			NUT, Pinion
2					YOKE, Pinion
	J813 3241	1			1981-86: With Dust Slinger on Yoke
	8350 3388	1			1986: Without Dust Slinger on Yoke
3					SEAL, Pinion
	J099 8092	1			1981-86: With Dust Slinger on Yoke
	8350 3390	1			1986: Without Dust Slinger on Yoke
4	J005 2878	1			BEARING
5	J005 2879	1			CUP, Bearing
6	J063 6566	1			SLINGER, Dust
7	J063 6568	1			SHIELD, Dust
8	J063 6570	1			WASHER
9	J080 7266	1			CONE, Bearing
10	J005 2877	1			CUP, Bearing
11	J091 6373	1			BAFFLE ***
12	J091 6372	1			SLINGER, Oil
13					GEAR SET, Front Axle Ring and Pinion
	J813 2704	1			1981-84: 2.73 Ratio, without Disconnect
	J813 4222	1			1982-84: 2.73 Ratio, with Disconnect
	J813 4222	1			1985-86: 2.73 Ratio
	J813 4219	1			3.31 Ratio
	J812 4777	1			3.73 Ratio
	J812 4386	1			4.88 Ratio
14	J064 9454	10			BOLT
15	J063 6360	1			PIN
16	J812 9222	1			SHIM PACKAGE (8), Case ***
17	J812 9221	1			SHIM PACKAGE (13), Pinion ***
18					GEAR SET, Front Axle Differential
	J812 9228	1			1981-84: Without Disconnect
	J813 4225	1			1982-84: With Disconnect
	J812 9228	1			1985-86
19	J064 5789	2			WASHER, Side Gear
20	J064 5790	2			WASHER, Pinion Gear
21	J080 5327	1			SHAFT, Differential
22	J812 4071	1			BEARING PACKAGE
23					CASE, Front Axle Differential
	J812 4038	1			1981-84: 2.73 or 3.31 Ratio, without Disconnect
	J813 4224	1			1982-84: 2.73 or 3.31 Ratio, with Disconnect
	J812 4038	1			1985-86: 2.73 or 3.31 Ratio

MODEL CODES
16=Cherokee 2 Dr.(1981-83)
17=Cherokee 2 Dr.(1981-83)
73=Cherokee 2WD-2 Dr.(1984-86)
74=Cherokee 2WD-4 Dr.(1984-86)
18=Cherokee 4 Dr.(1981-83)
77=Cherokee 4WD-2 Dr.(1984-86)
78=Cherokee 4WD-4 Dr.(1984-86)
85=CJ-5 (1981-83)
86=CJ-6(1981)
87=CJ-7(1981-86)
88=CJ-8, Scrambler(1981-86)
64=Comanche 2WD-6 Ft. Box(1986)
66=Comanche 2WD-7 Ft. Box(1986)
63=Comanche 4WD-6 Ft. Box(1986)
65=Comanche 4WD-7 Ft. Box(1986)
15=Grand Wagoneer 4 Dr.(1984-86)
25=J-10 Truck 7 Ft. Box(1981-84)
26=J10 Truck 8 Ft. Box(1981-86)
27=J-20 Truck 8 Ft. Box(1981-86)
15=Wagoneer 4 Dr.(1981-83)
75=Wagoneer 4WD-4 Dr.(1984-86)

BODY
CJ=CJ-5, CJ-6, CJ-7, CJ-8, Scrambler(1981-86)
MJ=Comanche Pickup(1986)

STYLES
SJ=Wagoneer(1981-83), Grand Wagoneer(1984-86), Cherokee(1981-83), J-10, J-20(1981-86)
XJ=Wagoneer(1984-86), Cherokee(1984-86)

AR = Use as Required - = Non Illustrated Part P.A.R. = Paint as Required

DIFFERENTIAL, FRONT AXLE SJ CHEROKEE, SJ WAGONEER J10, J20
Figure 2-2600

81J02 2600

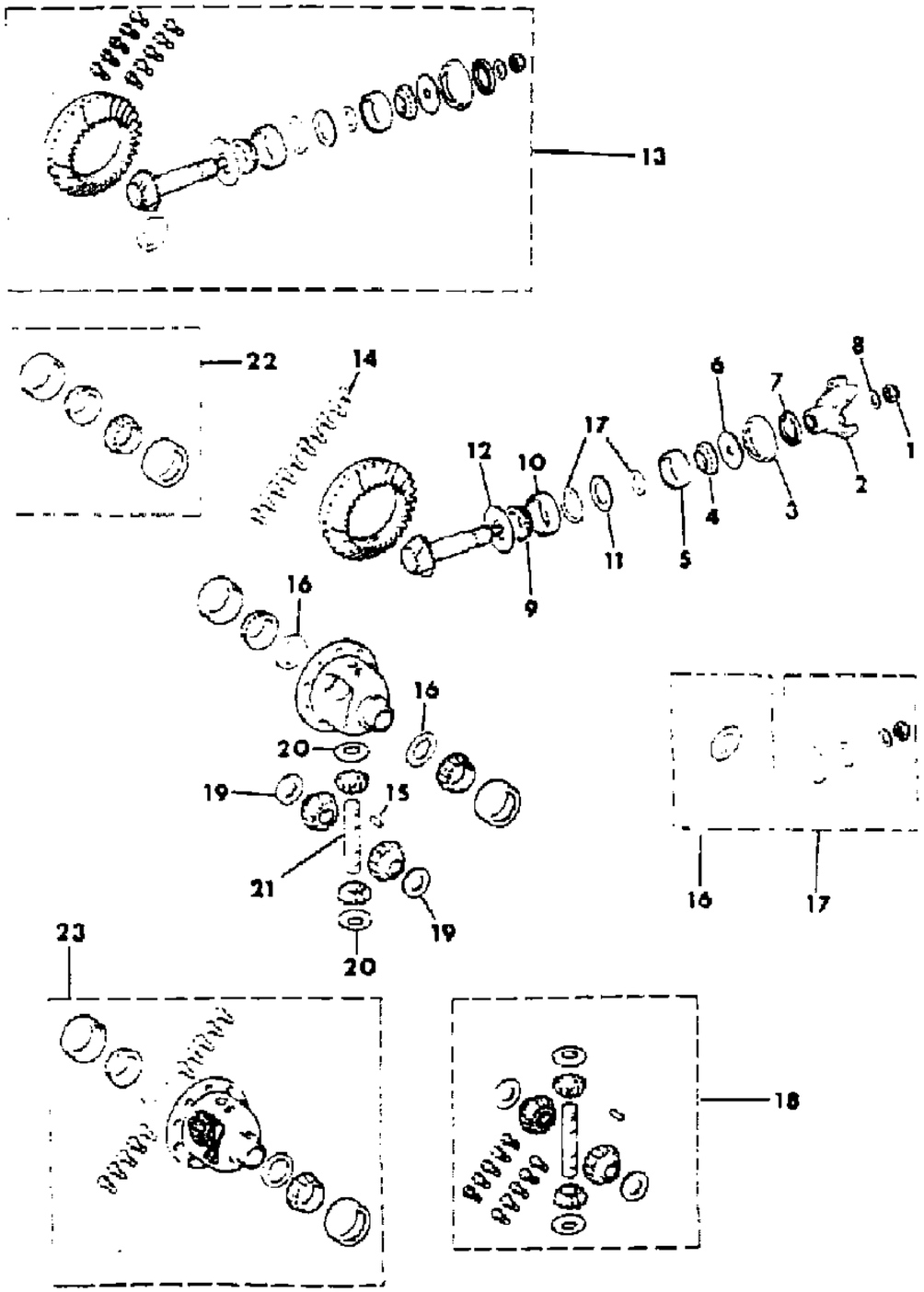

ITEM	PART NUMBER	QTY	BODY	MODEL	DESCRIPTION
	J812 4038	1			3.73 Ratio
	J812 9244	1			4.88 Ratio

MODEL CODES
16=Cherokee 2 Dr.(1981-83)
17=Cherokee 2 Dr.(1981-83)
73=Cherokee 2WD-2 Dr.(1984-86)
74=Cherokee 2WD-4 Dr.(1984-86)
18=Cherokee 4 Dr.(1981-83)
77=Cherokee 4WD-2 Dr.(1984-86)
78=Cherokee 4WD-4 Dr.(1984-86)
85=CJ-5 (1981-83)
86=CJ-6(1981)
87=CJ-7(1981-86)
88=CJ-8, Scrambler(1981-86)
64=Comanche 2WD-6 Ft. Box(1986)
66=Comanche 2WD-7 Ft. Box(1986)
63=Comanche 4WD-6 Ft. Box(1986)
65=Comanche 4WD-7 Ft. Box(1986)
15=Grand Wagoneer 4 Dr.(1984-86)
25=J-10 Truck 7 Ft. Box(1981-84)
26=J10 Truck 8 Ft. Box(1981-86)
27=J-20 Truck 8 Ft. Box(1981-86)
15=Wagoneer 4 Dr.(1981-83)
75=Wagoneer 4WD-4 Dr.(1984-86)

BODY
CJ=CJ-5, CJ-6, CJ-7, CJ-8, Scrambler(1981-86)
MJ=Comanche Pickup(1986)

STYLES
SJ=Wagoneer(1981-83), Grand Wagoneer(1984-86), Cherokee(1981-83), J-10, J-20(1981-86)
XJ=Wagoneer(1984-86), Cherokee(1984-86)

AR = Use as Required - = Non Illustrated Part P.A.R. = Paint as Required

« RETURN TO GROUP INDEX

SHAFTS, FRONT AXLE WITHOUT DISCONNECT SJ CHEROKEE, SJ WAGONEER, J10, J20
Figure 2-2700

81J02 2700

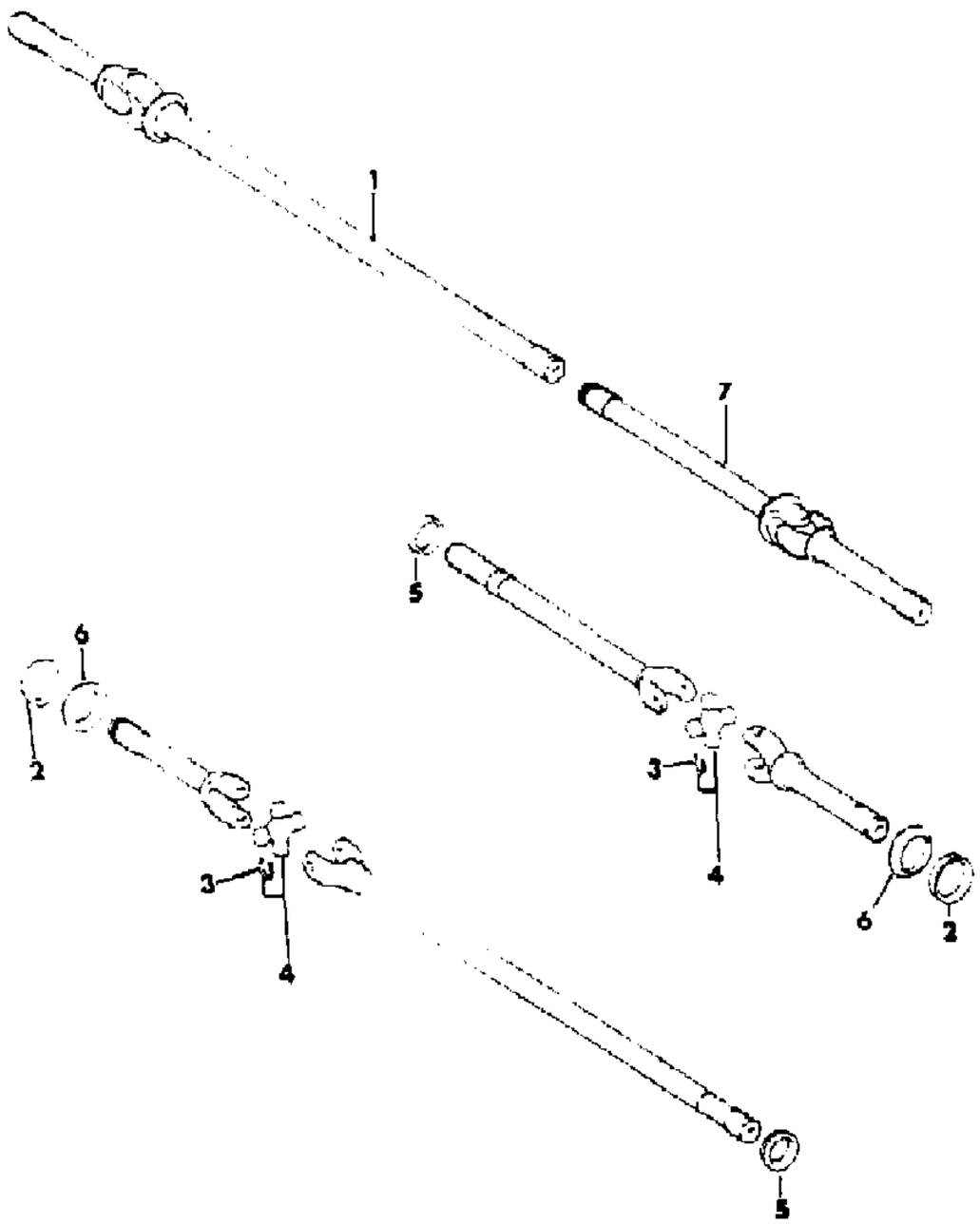

ITEM	PART NUMBER	QTY	BODY	MODEL	DESCRIPTION
1					SHAFT, Front Axle, Right
	J813 2912	1		15,16,1	
	J813 2915	1		17,25,2	
2	J812 7350	2			SEAL
3	J090 9453	8			RING, Snap
4	J812 6638	2			SPIDER ASSEMBLY ***
5					SEAL, Axle Inner
	J812 9096	2			2.625" O.D.
	8350 1873	2			2.250"
6	J812 8285	2			RETAINER
7					SHAFT, Front Axle, Left
	J813 2913	1		15,16,1	
	J813 2916	1		17,25,2	

MODEL CODES

16=Cherokee 2 Dr.(1981-83)
17=Cherokee 2 Dr.(1981-83)
73=Cherokee 2WD-2 Dr.(1984-86)
74=Cherokee 2WD-4 Dr.(1984-86)
18=Cherokee 4 Dr.(1981-83)
77=Cherokee 4WD-2 Dr.(1984-86)
78=Cherokee 4WD-4 Dr.(1984-86)
85=CJ-5 (1981-83)
86=CJ-6(1981)
87=CJ-7(1981-86)
88=CJ-8, Scrambler(1981-86)
64=Comanche 2WD-6 Ft. Box(1986)
66=Comanche 2WD-7 Ft. Box(1986)
63=Comanche 4WD-6 Ft. Box(1986)
65=Comanche 4WD-7 Ft. Box(1986)
15=Grand Wagoneer 4 Dr.(1984-86)
25=J-10 Truck 7 Ft. Box(1981-84)
26=J10 Truck 8 Ft. Box(1981-86)
27=J-20 Truck 8 Ft. Box(1981-86)
15=Wagoneer 4 Dr.(1981-83)
75=Wagoneer 4WD-4 Dr.(1984-86)

BODY
CJ=CJ-5, CJ-6, CJ-7, CJ-8, Scrambler(1981-86)
MJ=Comanche Pickup(1986)

STYLES
SJ=Wagoneer(1981-83), Grand Wagoneer(1984-86), Cherokee(1981-83), J-10, J-20(1981-86)
XJ=Wagoneer(1984-86), Cherokee(1984-86)

AR = Use as Required - = Non Illustrated Part P.A.R. = Paint as Required

« RETURN TO GROUP INDEX

SHAFTS, FRONT AXLE WITH DISCONNECT SJ CHEROKEE, SJ WAGONEER, J10
Figure 2-2800

81J02 2800

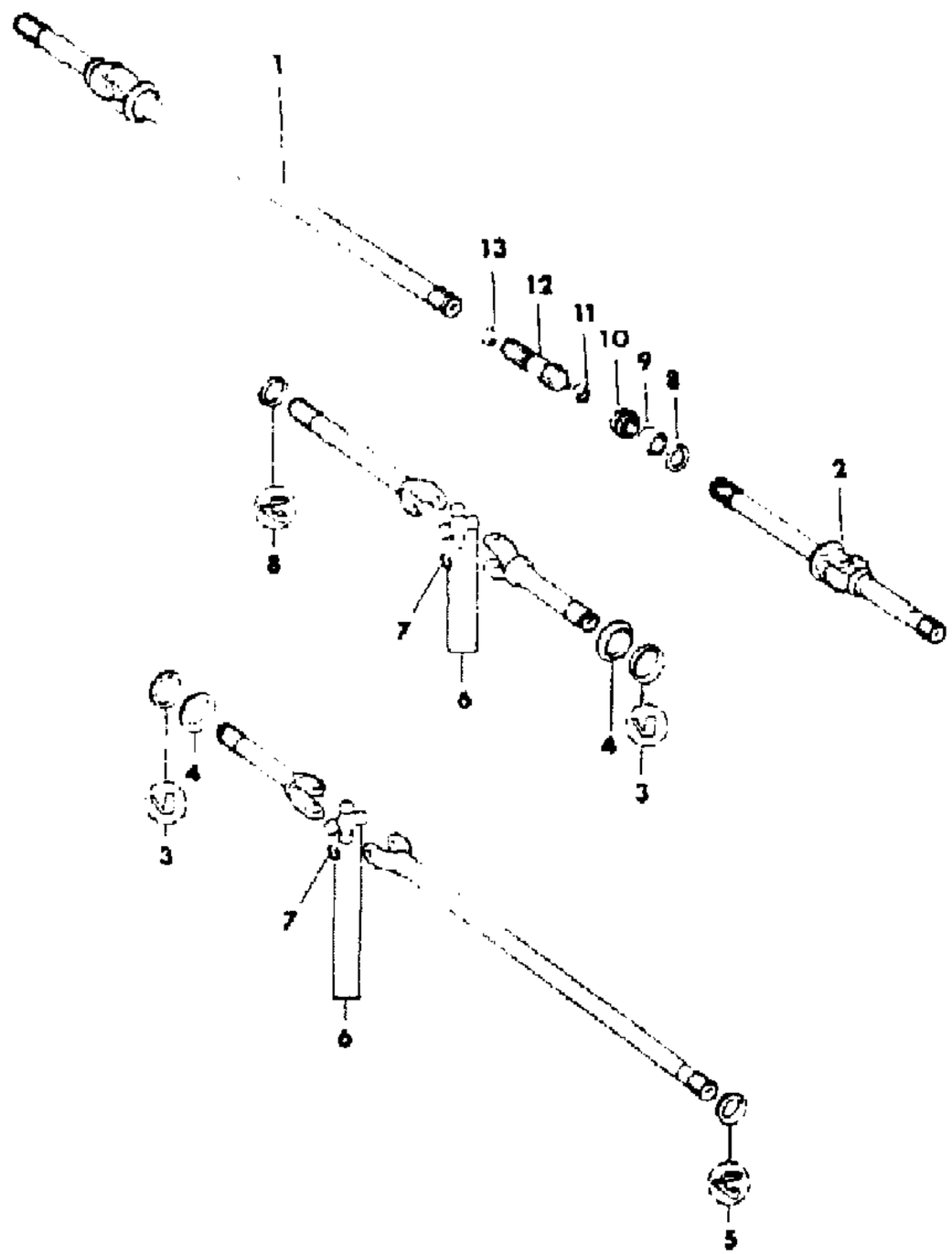

ITEM	PART NUMBER	QTY	BODY	MODEL	DESCRIPTION
1					Shaft, Front Axle, Right ***
	J813 2912	1		15,16,1	
	J813 2915	1		17,25,2	
2					SHAFT, Front Axle, Left
	J813 4226	1		15,16,1	
	J813 4217	1		17,25,2	
3	J812 7350	2			SEAL
4	J812 8285	2			RETAINER
5					SEAL, Inner Axle, Right
	8350 1009	1		15,16,1	
	8350 1873	1		17,25,2	
6	J812 6638	2			SPIDER ASSEMBLY ***
7	J090 9453	8			RING, Snap
8	J813 4216	1			SEAL, Inner Axle, Left
9	J813 4215	1			BEARING
10	J813 4214	1			COLLAR
11	J813 4213	1			BEARING
12	J813 4212	1			SHAFT
13	J813 0763	1			RING, Snap

MODEL CODES

16=Cherokee 2 Dr.(1981-83)
17=Cherokee 2 Dr.(1981-83)
73=Cherokee 2WD-2 Dr.(1984-86)
74=Cherokee 2WD-4 Dr.(1984-86)
18=Cherokee 4 Dr.(1981-83)
77=Cherokee 4WD-2 Dr.(1984-86)
78=Cherokee 4WD-4 Dr.(1984-86)
85=CJ-5 (1981-83)
86=CJ-6(1981)
87=CJ-7(1981-86)
88=CJ-8, Scrambler(1981-86)
64=Comanche 2WD-6 Ft. Box(1986)
66=Comanche 2WD-7 Ft. Box(1986)
63=Comanche 4WD-6 Ft. Box(1986)
65=Comanche 4WD-7 Ft. Box(1986)
15=Grand Wagoneer 4 Dr.(1984-86)
25=J-10 Truck 7 Ft. Box(1981-84)
26=J10 Truck 8 Ft. Box(1981-86)
27=J-20 Truck 8 Ft. Box(1981-86)
15=Wagoneer 4 Dr.(1981-83)
75=Wagoneer 4WD-4 Dr.(1984-86)

BODY
CJ=CJ-5, CJ-6, CJ-7, CJ-8, Scrambler(1981-86)
MJ=Comanche Pickup(1986)

STYLES
SJ=Wagoneer(1981-83), Grand Wagoneer(1984-86), Cherokee(1981-83), J-10, J-20(1981-86)
XJ=Wagoneer(1984-86), Cherokee(1984-86)

AR = Use as Required - = Non Illustrated Part P.A.R. = Paint as Required

« RETURN TO GROUP INDEX

LOCKING HUB, SELECTIVE DRIVE WARN MODEL M-253 CJ-5,6,7,8, SCRAMBLER
Figure 2-2900

81J02 2900

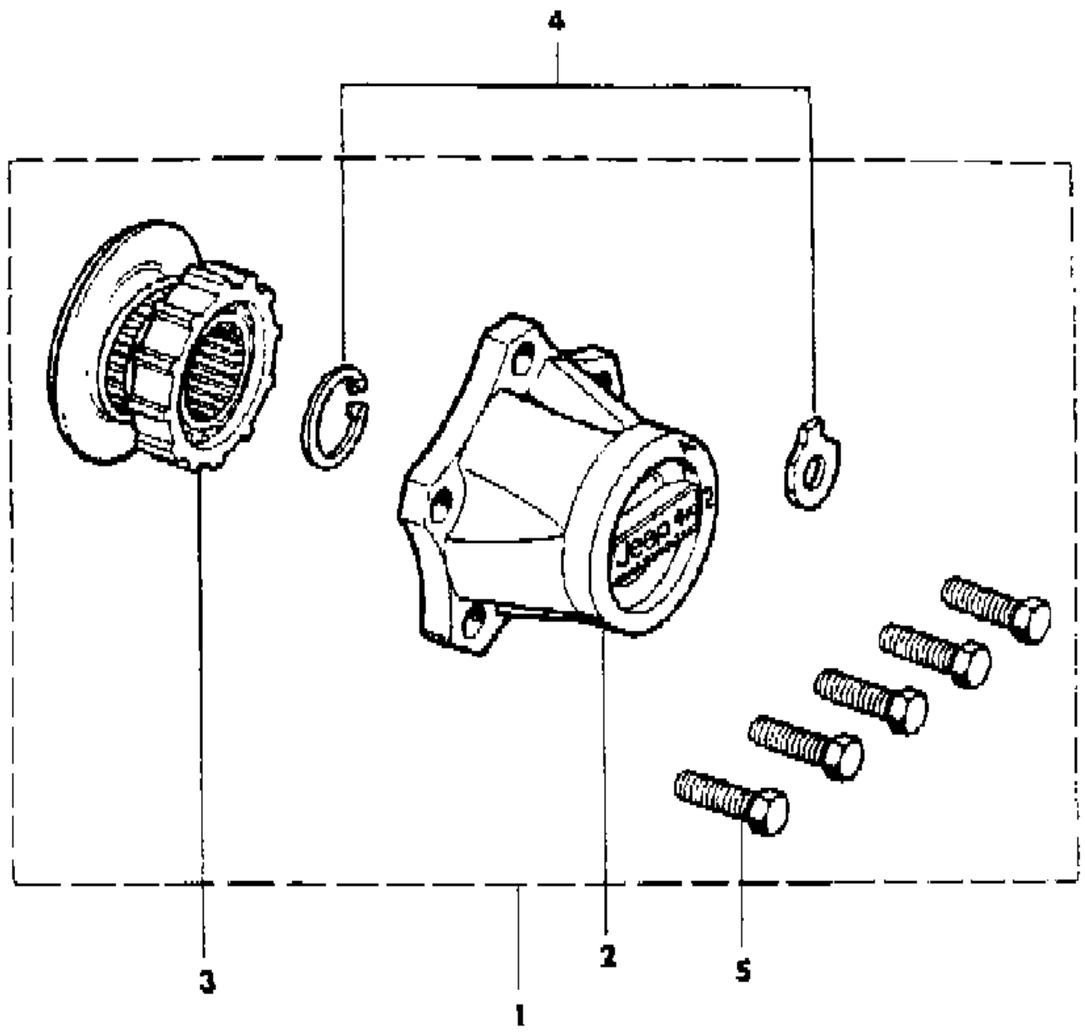

ITEM	PART NUMBER	QTY	BODY	MODEL	DESCRIPTION
1	J813 1273	2			HUB ASSEMBLY ***
2	J813 1274	2			CAP
3	J813 1275	2			HUB
4	J813 1276	2			SERVICE PACKAGE ***
5	J018 0125	10			BOLT

MODEL CODES

16=Cherokee 2 Dr.(1981-83)
17=Cherokee 2 Dr.(1981-83)
73=Cherokee 2WD-2 Dr.(1984-86)
74=Cherokee 2WD-4 Dr.(1984-86)
18=Cherokee 4 Dr.(1981-83)
77=Cherokee 4WD-2 Dr.(1984-86)
78=Cherokee 4WD-4 Dr.(1984-86)
85=CJ-5 (1981-83)
86=CJ-6(1981)
87=CJ-7(1981-86)
88=CJ-8, Scrambler(1981-86)
64=Comanche 2WD-6 Ft. Box(1986)
66=Comanche 2WD-7 Ft. Box(1986)
63=Comanche 4WD-6 Ft. Box(1986)
65=Comanche 4WD-7 Ft. Box(1986)
15=Grand Wagoneer 4 Dr.(1984-86)
25=J-10 Truck 7 Ft. Box(1981-84)
26=J10 Truck 8 Ft. Box(1981-86)
27=J-20 Truck 8 Ft. Box(1981-86)
15=Wagoneer 4 Dr.(1981-83)
75=Wagoneer 4WD-4 Dr.(1984-86)

BODY
CJ=CJ-5, CJ-6, CJ-7, CJ-8, Scrambler(1981-86)
MJ=Comanche Pickup(1986)

STYLES
SJ=Wagoneer(1981-83), Grand Wagoneer(1984-86), Cherokee(1981-83), J-10, J-20(1981-86)
XJ=Wagoneer(1984-86), Cherokee(1984-86)

AR = Use as Required - = Non Illustrated Part P.A.R. = Paint as Required

« RETURN TO GROUP INDEX

LOCKING HUB, SELECTIVE DRIVE WARN MODEL M-75E SJ CHEROKEE, SJ WAGONEER, J10, J20
Figure 2-3000

81J02 3000

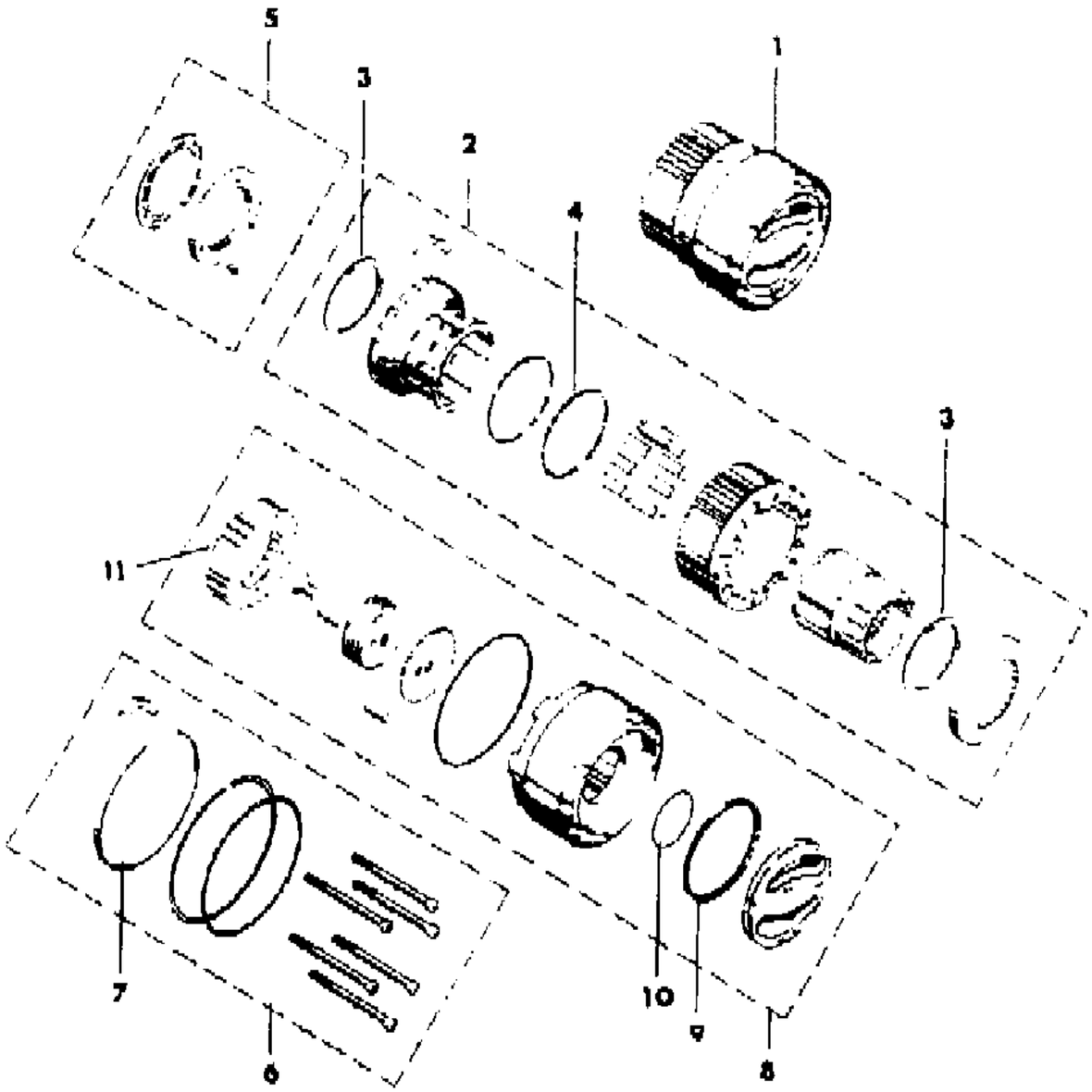

ITEM	PART NUMBER	QTY	BODY	MODEL	DESCRIPTION
1	J812 3949	2			HUB ASSEMBLY ***
2	J812 3951	2			BODY REPAIR PACKAGE ***
3	J812 3645	2			RING, Snap
4	J812 3649	2			RING, Snap
5	J812 3962	2			NUT PACKAGE ***
6	J812 3950	2			SERVICE PACKAGE ***
7	J812 3801	2			RING, Snap
8	J812 3952	2			CAP REPAIR PACKAGE ***
9	J206 4000	2			SEAL
10	J206 4002	2			O-RING
11	J812 3639	2			CLUTCH ***

MODEL CODES

16=Cherokee 2 Dr.(1981-83)
17=Cherokee 2 Dr.(1981-83)
73=Cherokee 2WD-2 Dr.(1984-86)
74=Cherokee 2WD-4 Dr.(1984-86)
18=Cherokee 4 Dr.(1981-83)
77=Cherokee 4WD-2 Dr.(1984-86)
78=Cherokee 4WD-4 Dr.(1984-86)
85=CJ-5 (1981-83)
86=CJ-6(1981)
87=CJ-7(1981-86)
88=CJ-8, Scrambler(1981-86)
64=Comanche 2WD-6 Ft. Box(1986)
66=Comanche 2WD-7 Ft. Box(1986)
63=Comanche 4WD-6 Ft. Box(1986)
65=Comanche 4WD-7 Ft. Box(1986)
15=Grand Wagoneer 4 Dr.(1984-86)
25=J-10 Truck 7 Ft. Box(1981-84)
26=J10 Truck 8 Ft. Box(1981-86)
27=J-20 Truck 8 Ft. Box(1981-86)
15=Wagoneer 4 Dr.(1981-83)
75=Wagoneer 4WD-4 Dr.(1984-86)

BODY
CJ=CJ-5, CJ-6, CJ-7, CJ-8, Scrambler(1981-86)
MJ=Comanche Pickup(1986)

STYLES
SJ=Wagoneer(1981-83), Grand Wagoneer(1984-86), Cherokee(1981-83), J-10, J-20(1981-86)
XJ=Wagoneer(1984-86), Cherokee(1984-86)

AR = Use as Required - = Non Illustrated Part P.A.R. = Paint as Required

« RETURN TO GROUP INDEX

LOCKING HUB, SELECTIVE DRIVE WARN MODEL M-247 SJ CHEROKEE, SJ WAGONEER, J10, J20
Figure 2-3100

81J02 3100

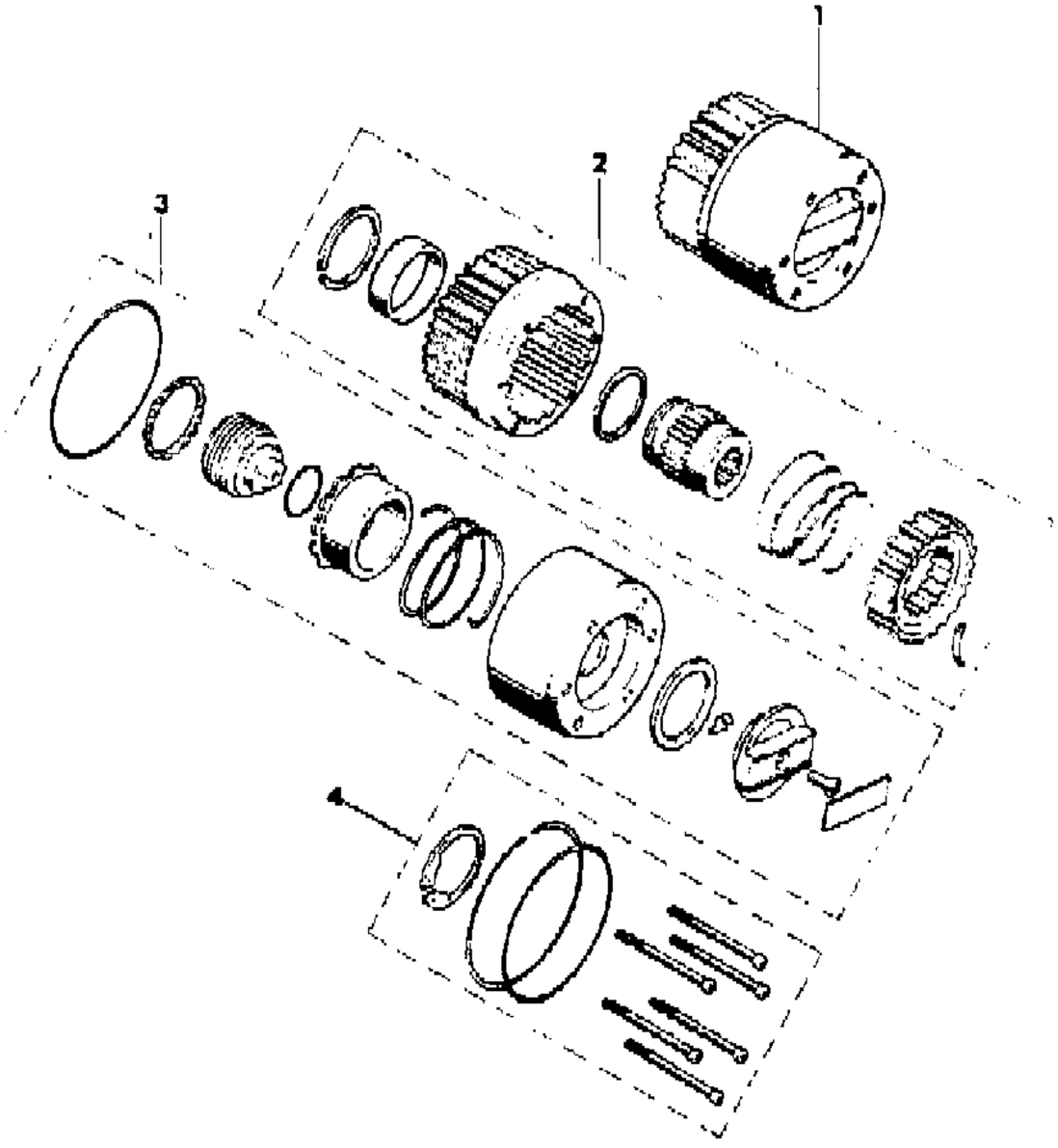

ITEM	PART NUMBER	QTY	BODY	MODEL	DESCRIPTION
1	5300 4806	2			HUB ASSEMBLY ***
2	J813 1252	2			BODY REPAIR PACKAGE ***
3	J813 1232	2			CAP REPAIR PACKAGE ***
4	J813 1251	2			SERVICE PACKAGE ***

MODEL CODES

16=Cherokee 2 Dr.(1981-83)
17=Cherokee 2 Dr.(1981-83)
73=Cherokee 2WD-2 Dr.(1984-86)
74=Cherokee 2WD-4 Dr.(1984-86)
18=Cherokee 4 Dr.(1981-83)
77=Cherokee 4WD-2 Dr.(1984-86)
78=Cherokee 4WD-4 Dr.(1984-86)
85=CJ-5 (1981-83)
86=CJ-6(1981)
87=CJ-7(1981-86)
88=CJ-8, Scrambler(1981-86)
64=Comanche 2WD-6 Ft. Box(1986)
66=Comanche 2WD-7 Ft. Box(1986)
63=Comanche 4WD-6 Ft. Box(1986)
65=Comanche 4WD-7 Ft. Box(1986)
15=Grand Wagoneer 4 Dr.(1984-86)
25=J-10 Truck 7 Ft. Box(1981-84)
26=J10 Truck 8 Ft. Box(1981-86)
27=J-20 Truck 8 Ft. Box(1981-86)
15=Wagoneer 4 Dr.(1981-83)
75=Wagoneer 4WD-4 Dr.(1984-86)

BODY
CJ=CJ-5, CJ-6, CJ-7, CJ-8, Scrambler(1981-86)
MJ=Comanche Pickup(1986)

STYLES
SJ=Wagoneer(1981-83), Grand Wagoneer(1984-86), Cherokee(1981-83), J-10, J-20(1981-86)
XJ=Wagoneer(1984-86), Cherokee(1984-86)

AR = Use as Required - = Non Illustrated Part P.A.R. = Paint as Required

« RETURN TO GROUP INDEX

ILLUSTRATION NOT AVAILABLE AT TIME OF PUBLICATION

GROUP 3 - REAR AXLE

ILLUSTRATION TITLE	GROUP-FIG. NO.
CJ	
AXLE ASSEMBLY, REAR CJ-5,6,7,8, SCRAMBLER	Fig. 3-100
AXLE HOUSING, REAR AMC LARGE AXLE CJ-5,6,7,8, SCRAMBLER	Fig. 3-200
DIFFERENTIAL AND GEARS, REAR AXLE AMC LARGE AXLE, NON-LOCKING CJ-5,6,7,8, SCRAMBLER	Fig. 3-300
DIFFERENTIAL AND GEARS, REAR AXLE AMC LARGE AXLE, LOCKING CJ-5,6,7,8, SCRAMBLER	Fig. 3-400
SHAFTS, REAR AXLE AMC LARGE AXLE CJ-5,6,7,8, SCRAMBLER	Fig. 3-500
AXLE HOUSING, REAR DANA MODEL 44 CJ-7,8, SCRAMBLER	Fig. 3-600
DIFFERENTIAL AND GEARS, REAR AXLE DANA MODEL 44, NON-LOCKING CJ-7,8, SCRAMBLER	Fig. 3-700
DIFERENTIAL AND GEARS, REAR AXLE DANA MODEL 44, LOCKING CJ-7,8, SCRAMBLER	Fig. 3-800
SHAFTS, REAR AXLE DANA MODEL 44 CJ-7,8, SCRAMBLER	Fig. 3-900
XJ CHEROKEE, XJ WAGONEER, COMANCHE	
AXLE ASSEMBLY, REAR AMC OR DANA MODEL 35 XJ CHEROKEE, XJ WAGONEER, COMANCHE	Fig. 3-1000
AXLE HOUSING, REAR AMC OR DANA MODEL 35 XJ CHEROKEE, XJ WAGONEER, COMANCHE	Fig. 3-1100
DIFFERRENTIAL AND GEARS, REAR AXLE AMC OR DANA MODEL 35, NON-LOCKING XJ CHEROKEE, XJ WAGONEER, COMANCHE	Fig. 3-1200
DIFFERRENTIAL AND GEARS, REAR AXLE AMC OR DANA MODEL 35, LOCKING XJ CHEROKEE, XJ WAGONEER, COMANCHE	Fig. 3-1300
SHAFT, REAT AXLE AMC OR DANA MODEL 35 XJ CHEROKEE, XJ WAGONEER, COMANCHE	Fig. 3-1400
AXLE ASSEMBLY, REAR AMC LARGE AXLE COMANCHE	Fig. 3-1500
AXLE ASSEMBLY, REAR AMC LARGE AXLE COMANCHE	Fig. 3-1600
DIFFERENTIAL AND GEARS, REAR AXLE AMC LARGE AXLE, NON-LOCKING COMANCHE	Fig. 3-1700
DIFFERENTIAL AND GEARS, REAR AXLE AMC LARGE AXLE, LOCKING COMANCHE	Fig. 3-1800
SHAFT, REAR AXLE AMC LARGE AXLE COMANCHE	Fig. 3-1900
AXLE ASSEMBLY, REAR DANA MODEL 44 COMANCHE	Fig. 3-2000
AXLE HOUSING, REAR DANA MODEL 44 COMANCHE	Fig. 3-2100
DIFFERENTIAL AND GEARS, REAR AXLE DANA MODEL 44, NON-LOCKING COMANCHE	Fig. 3-2200
DIFFERENTIAL AND GEARS, REAR AXLE DANA MODEL 44, LOCKING COMANCHE	Fig. 3-2300
SHAFTS, REAR AXLE DANA MODEL 44 COMANCHE	Fig. 3-2400
SJ CHEROKEE, SJ WAGONEER, J10, J20	
AXLE ASSEMBLY, REAR AMC LARGE, DANA 44, DANA 60 SJ CHEROKEE, SJ WAGONEER, J10, J20	Fig. 3-2500
AXLE HOUSING, REAR AMC LARGE AXLE SJ CHEROKEE, SJ WAGONEER, J10, J20	Fig. 3-2600
DIFFERENTIAL AND GEARS, REAR AXLE AMC LARGE AXLE, NON-LOCKING SJ CHEROKEE, SJ WAGONEER, J10	Fig. 3-2700
DIFFERENTIAL AND GEARS, REAR AXLE AMC LARGE AXLE, LOCKING SJ CHEROKEE, SJ WAGONEER, J10	Fig. 3-2800
SHAFTS, REAR AXLE AMC LARGE AXLE SJ CHEROKEE, SJ WAGONEER, J10	Fig. 3-2900

ILLUSTRATION TITLE **GROUP-FIG. NO.**

SJ CHEROKEE, SJ WAGONEER, J10, J20 (Continued)

SHAFTS, REAR AXLE AMC LARGE AXLE SJ CHEROKEE, SJ WAGONEER, J10 . . . . . Fig. 3-2900
AXLE HOUSING, REAR DANA MODEL 44 SJ CHEROKEE, SJ WAGONEER, J10 . . . . . Fig. 3-3000
DIFFERENTIAL AND GEARS, REAR AXLE DANA MODEL 44, NON-LOCKING SJ CHEROKEE, SJ WAGONEER, J10 . . . . . Fig. 3-3100
DIFFERENTIAL AND GEARS, REAR AXLE DANA MODEL 44, LOCKING SJ CHEROKEE, SJ WAGONEER, J10 . . . . . Fig. 3-3200
SHAFTS, REAR AXLE DANA MODEL 44 SJ CHEROKEE, SJ WAGONEER, J10 . . . . . Fig. 3-3300
AXLE HOUSING, REAR DANA MODEL 60 J20 . . . . . Fig. 3-3400
DIFFERENTIAL AND GEARS, REAR AXLE DANA MODEL 60, NON-LOCKING J20 . . . . . Fig. 3-3500
DIFFERENTIAL AND GEARS, REAR AXLE DANA MODEL 60, LOCKING J20 . . . . . Fig. 3-3600
SHAFTS, REAR AXLE DANA MODEL 60 J20 . . . . . Fig. 3-3700

AXLE ASSEMBLY, REAR CJ-5,6,7,8, SCRAMBLER
Figure 3-100

81J03 100

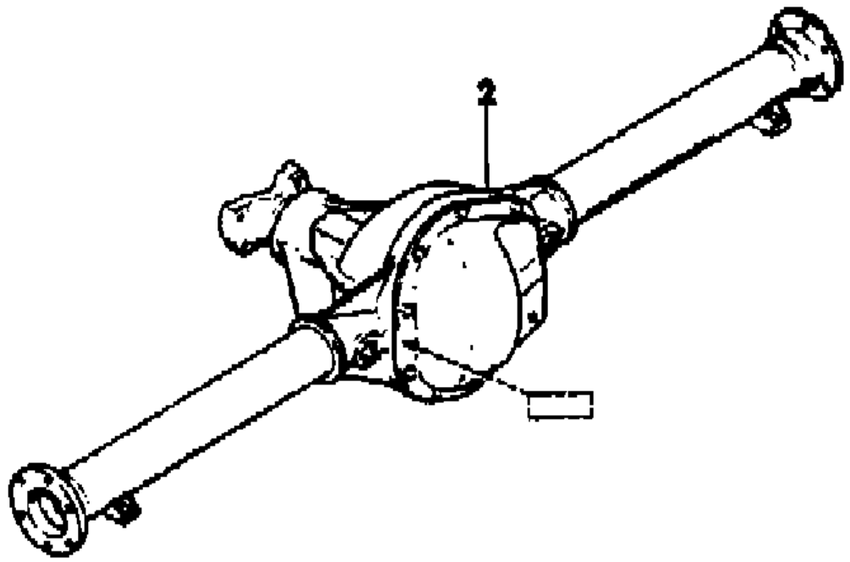

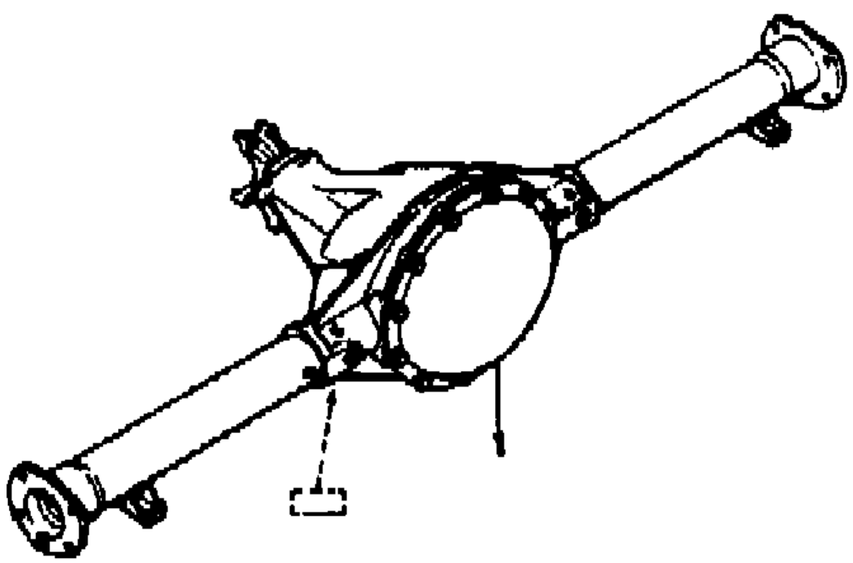

ITEM	PART NUMBER	QTY	BODY	MODEL	DESCRIPTION
1					AXLE ASSEMBLY REAR, AMC, Without Locking Differential ***
	J536 2050	1			1981: 2.73 Ratio, Stamped AA or D
	J536 2048	1			1981: 3.31 Ratio, Stamped BB or B
	J536 2046	1			1981: 3.73 Ratio, Stamped GG or H
	J536 2050	1		85,86	1982-83: 2.73 Ratio, Stamped AA or D
	J536 3718	1		87,88	1982-86: 2.73 Ratio, Stamped AA or D
	J536 2048	1		85,86	1982-83: 3.31 Ratio, Stamped BB or B
	J536 3716	1		87,88	1982-86: 3.31 Ratio, Stamped BB or B
	J536 0148	1		85,86	1982-86: 3.54 Ratio, Stamped A
	J536 3723	1		87,88	1982-86: 3.54 Ratio, Stamped A
	J536 0150	1		85,86	1982-83: 4.10 Ratio, Stamped L or C
	J536 3721	1		87,88	1982-86: 4.10 Ratio, Stamped L or C
	J536 4025	1		87,88	1982-86: 4.56 Ratio, Stamped G
					AXLE ASSEMBLY REAR, AMC, With Locking Differential ***
	J536 2051	1			1981: 2.73 Ratio, Stamped DD
	J536 2049	1			1981: 3.31 Ratio, Stamped CC
	J536 2047	1			1981: 3.73 Ratio, Stamped HH
	J536 2051	1		85,86	1982-83: 2.73 Ratio, Stamped DD
	J536 3719	1		87,88	1982-86: 2.73 Ratio, Stamped DD
	J536 2049	1		85,86	1982-83: 3.31 Ratio, Stamped BB or CC
	J536 3717	1		87,88	1982-86: 3.31 Ratio, Stamped BB or CC
	J536 0149	1		85,86	1982-83: 3.54 Ratio, Stamped N or AA
	J536 3722	1		87,88	1982-86: 3.54 Ratio, Stamped N or AA
	J536 0151	1		85,86	1982-83: 4.10 Ratio, Stamped M or CC
	J536 3720	1		87,88	1982-86: 4.10 Ratio, Stamped M or CC
	J536 4436	1		87,88	1982-86: 4.56 Ratio, Stamped GG
2					AXLE ASSEMBLY REAR, DANA 44, Without Locking Differential ***
	8350 3072	1		87,88	1986: 2.73 Ratio, Tagged 8953004106
	8350 3079	1		87,88	1986: 3.31 Ratio, Tagged 8953004104
	8350 3081	1		87,88	1986: 3.54 Ratio, Tagged 8953004100
	8350 3083	1		87,88	1986: 4.10 Ratio, Tagged 8953004102
	8350 3085	1		87,88	1986: 4.56 Ratio, Tagged 8953004108
					AXLE ASSEMBLY REAR, DANA 44, With Locking Differential ***
	8350 3078	1		87,88	1986: 2.73 Ratio, Tagged 8953004107
	8350 3080	1		87,88	1986: 3.31 Ratio, Tagged 8953004105
	8350 3082	1		87,88	1986: 3.54 Ratio, Tagged 8953004101
	8350 3084	1		87,88	1986: 4.10 Ratio, Tagged 8953004103
	8350 3086	1		87,88	1986: 4.56 Ratio, Tagged 8953004109

MODEL CODES

16=Cherokee 2 Dr.(1981-83)
17=Cherokee 2 Dr.(1981-83)
73=Cherokee 2WD-2 Dr.(1984-86)
74=Cherokee 2WD-4 Dr.(1984-86)
18=Cherokee 4 Dr.(1981-83)
77=Cherokee 4WD-2 Dr.(1984-86)
78=Cherokee 4WD-4 Dr.(1984-86)
85=CJ-5 (1981-83)
86=CJ-6(1981)
87=CJ-7(1981-86)
88=CJ-8, Scrambler(1981-86)
64=Comanche 2WD-6 Ft. Box(1986)
66=Comanche 2WD-7 Ft. Box(1986)
63=Comanche 4WD-6 Ft. Box(1986)
65=Comanche 4WD-7 Ft. Box(1986)
15=Grand Wagoneer 4 Dr.(1984-86)
25=J-10 Truck 7 Ft. Box(1981-84)
26=J10 Truck 8 Ft. Box(1981-86)
27=J-20 Truck 8 Ft. Box(1981-86)
15=Wagoneer 4 Dr.(1981-83)
75=Wagoneer 4WD-4 Dr.(1984-86)

BODY
CJ=CJ-5, CJ-6, CJ-7, CJ-8, Scrambler(1981-86)
MJ=Comanche Pickup(1986)

STYLES
SJ=Wagoneer(1981-83), Grand Wagoneer(1984-86), Cherokee(1981-83), J-10, J-20(1981-86)
XJ=Wagoneer(1984-86), Cherokee(1984-86)

AR = Use as Required - = Non Illustrated Part P.A.R. = Paint as Required

« RETURN TO GROUP INDEX

AXLE HOUSING, REAR AMC LARGE AXLE CJ-5,6,7,8, SCRAMBLER
Figure 3-200

81J03 200

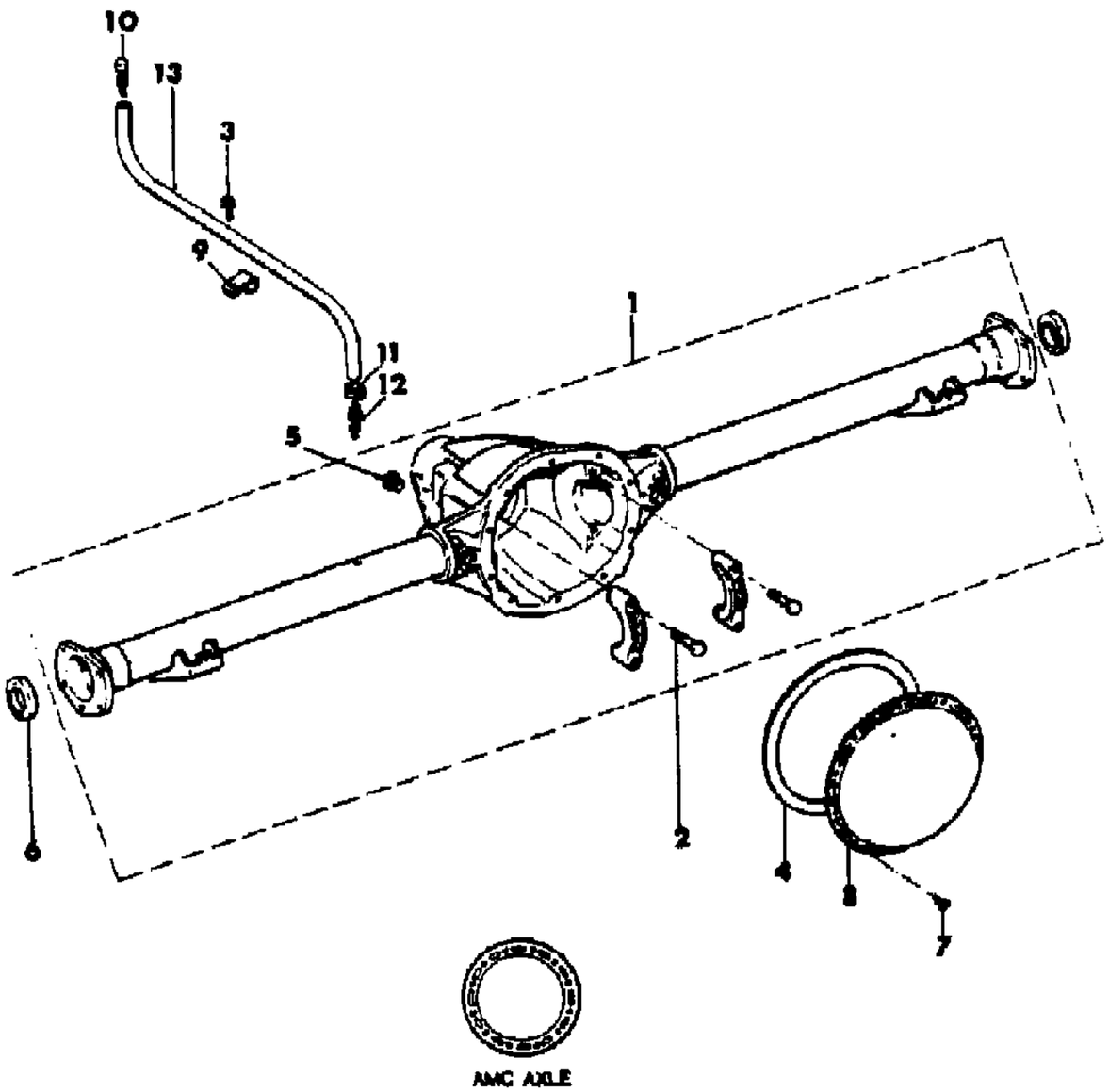

ITEM	PART NUMBER	QTY	BODY	MODEL	DESCRIPTION
1					HOUSING, Axle
	J813 0994	1			1981
	J813 0994	1		85,86	1982-83
	J813 3887	1		87,88	1982-86
2	J400 6554	4			BOLT
3	J942 6241	1			SCREW
4	J317 2122	1			GASKET
5	J400 4751	1			PLUG
6	J317 0700	2			SEAL
7	J099 1546	12			BOLT
8	J321 5943	1			COVER
9	J014 0780	1			CLIP
10	J535 2955	1			BREATHER
11	J322 7851	1			CLAMP
12	J535 3494	1			VENT
13	J812 5823	1			HOSE

MODEL CODES
16=Cherokee 2 Dr.(1981-83)
17=Cherokee 2 Dr.(1981-83)
73=Cherokee 2WD-2 Dr.(1984-86)
74=Cherokee 2WD-4 Dr.(1984-86)
18=Cherokee 4 Dr.(1981-83)
77=Cherokee 4WD-2 Dr.(1984-86)
78=Cherokee 4WD-4 Dr.(1984-86)
85=CJ-5 (1981-83)
86=CJ-6(1981)
87=CJ-7(1981-86)
88=CJ-8, Scrambler(1981-86)
64=Comanche 2WD-6 Ft. Box(1986)
66=Comanche 2WD-7 Ft. Box(1986)
63=Comanche 4WD-6 Ft. Box(1986)
65=Comanche 4WD-7 Ft. Box(1986)
15=Grand Wagoneer 4 Dr.(1984-86)
25=J-10 Truck 7 Ft. Box(1981-84)
26=J10 Truck 8 Ft. Box(1981-86)
27=J-20 Truck 8 Ft. Box(1981-86)
15=Wagoneer 4 Dr.(1981-83)
75=Wagoneer 4WD-4 Dr.(1984-86)

BODY
CJ=CJ-5, CJ-6, CJ-7, CJ-8, Scrambler(1981-86)
MJ=Comanche Pickup(1986)

STYLES
SJ=Wagoneer(1981-83), Grand Wagoneer(1984-86), Cherokee(1981-83), J-10, J-20(1981-86)
XJ=Wagoneer(1984-86), Cherokee(1984-86)

AR = Use as Required - = Non Illustrated Part P.A.R. = Paint as Required

« RETURN TO GROUP INDEX

DIFFERENTIAL AND GEARS, REAR AXLE AMC LARGE AXLE, NON-LOCKING CJ-5,6,7,8, SCRAMBLER
Figure 3-300

81J03 300

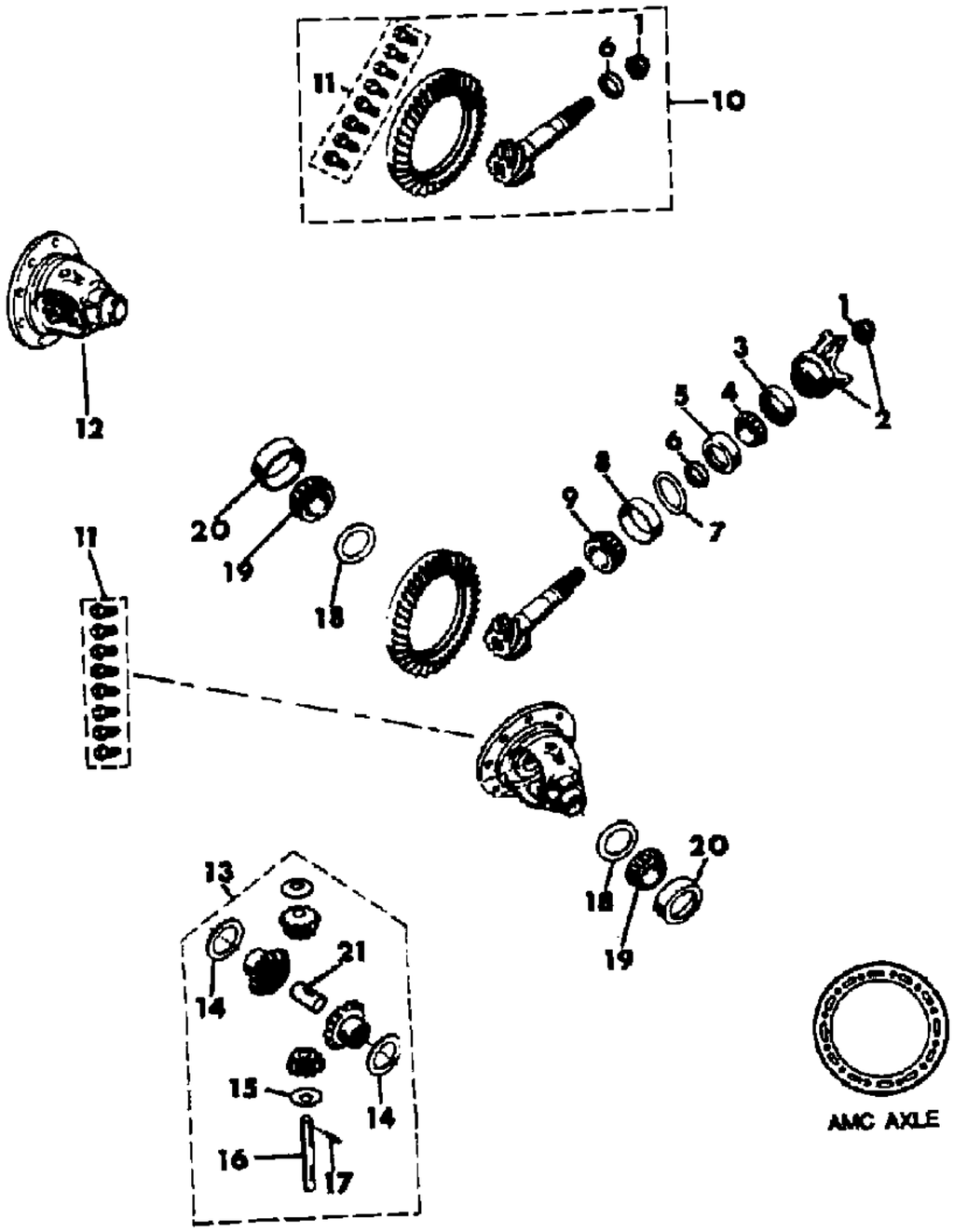

ITEM	PART NUMBER	QTY	BODY	MODEL	DESCRIPTION
1	J318 2601	1			NUT, Pinion
2					YOKE, Pinion
	J813 2702	1			1981-85: With Dust Slinger on Yoke
	8350 2058	1			1985-86: Without Dust Slinger on Yoke
3					SEAL, Pinion
	J320 8474	1			1981-85: With Dust Slinger On Yoke
	5300 2642	1			1985-86: Without Dust Slinger on Yoke
4	J317 2135	1			CONE, Bearing
5	J317 2134	1			CUP, Bearing
6	J318 5971	1			SPACER
7	J320 5567	1			SHIM PACKAGE (18), Pinion ***
8	J317 2564	1			CUP, Bearing
9	J317 2563	1			CONE, Bearing
10					GEAR SET, Rear Axle Ring and Pinion
	J813 2699	1			2.73 Ratio
	J813 2700	1			3.31 Ratio
	J813 3179	1			3.73 Ratio
	J448 6825	1			3.54 Ratio
	J812 7072	1			4.10 Ratio
	J813 4410	1			4.56 Ratio
11	J448 6828	1			BOLT PACKAGE ***
12					CASE ASSEMBLY, Differential
	J322 8921	1			2.73 Ratio
	J323 6220	1			3.31, 3.54, 3.73, 4.10, 4.56 Ratios
13	J812 7092	1			GEAR SET, Differential
14	J322 0250	2			WASHER, Side Gear
15	J322 2999	2			WASHER, Pinion Gear
16	J321 8195	1			SHAFT, Differential
17	S045 5313	1			PIN
18	J320 5532	1			SHIM PACKAGE (18), Case ***
19	J317 2565	2			CONE, Bearing
20	J317 2566	2			CUP, Bearing
21	J316 2323	1			BLOCK

MODEL CODES

16=Cherokee 2 Dr.(1981-83)
17=Cherokee 2 Dr.(1981-83)
73=Cherokee 2WD-2 Dr.(1984-86)
74=Cherokee 2WD-4 Dr.(1984-86)
18=Cherokee 4 Dr.(1981-83)
77=Cherokee 4WD-2 Dr.(1984-86)
78=Cherokee 4WD-4 Dr.(1984-86)
85=CJ-5 (1981-83)
86=CJ-6(1981)
87=CJ-7(1981-86)
88=CJ-8, Scrambler(1981-86)
64=Comanche 2WD-6 Ft. Box(1986)
66=Comanche 2WD-7 Ft. Box(1986)
63=Comanche 4WD-6 Ft. Box(1986)
65=Comanche 4WD-7 Ft. Box(1986)
15=Grand Wagoneer 4 Dr.(1984-86)
25=J-10 Truck 7 Ft. Box(1981-84)
26=J10 Truck 8 Ft. Box(1981-86)
27=J-20 Truck 8 Ft. Box(1981-86)
15=Wagoneer 4 Dr.(1981-83)
75=Wagoneer 4WD-4 Dr.(1984-86)

BODY
CJ=CJ-5, CJ-6, CJ-7, CJ-8, Scrambler(1981-86)
MJ=Comanche Pickup(1986)

STYLES
SJ=Wagoneer(1981-83), Grand Wagoneer(1984-86), Cherokee(1981-83), J-10, J-20(1981-86)
XJ=Wagoneer(1984-86), Cherokee(1984-86)

AR = Use as Required - = Non Illustrated Part P.A.R. = Paint as Required

« RETURN TO GROUP INDEX

DIFFERENTIAL AND GEARS, REAR AXLE AMC LARGE AXLE, LOCKING CJ-5,6,7,8, SCRAMBLER
Figure 3-400

81J03 400

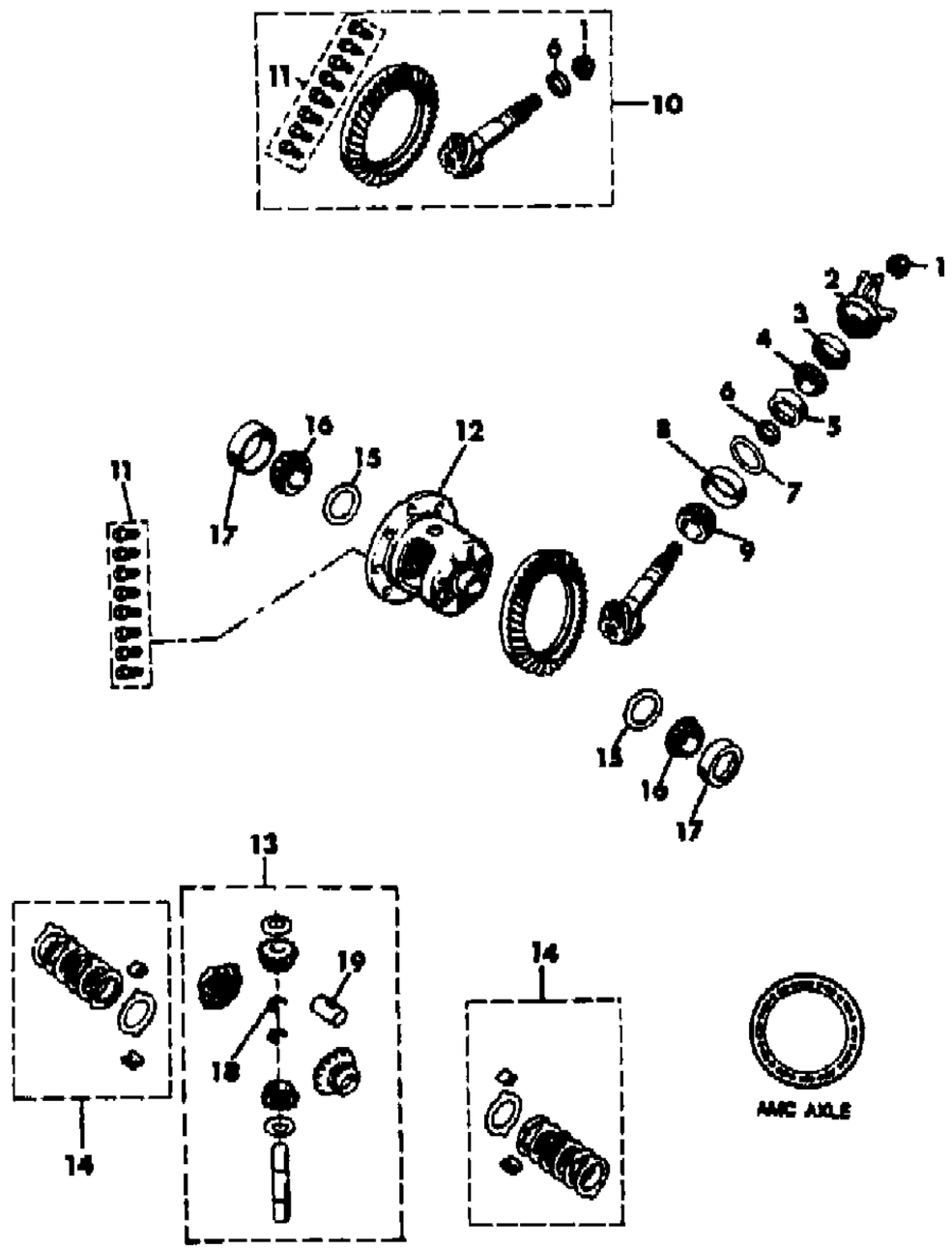

ITEM	PART NUMBER	QTY	BODY	MODEL	DESCRIPTION
1	J318 2601	1			NUT, Pinion
2					YOKE, Pinion
	J813 2702	1			1981-85: With Dust Slinger on Yoke
	8350 2058	1			1985-86: Without Dust Slinger on Yoke
3					SEAL, Pinion
	J320 8474	1			1981-85: With Dust Slinger on Yoke
	5300 2642	1			1985-86: Without Dust Slinger On Yoke
4	J317 2135	1			CONE, Bearing
5	J317 2134	1			CUP, Bearing
6	J318 5971	1			SPACER
7	J320 5567	1			SHIM PACKAGE (18), Pinion ***
8	J317 2564	1			CUP, Bearing
9	J317 2563	1			CONE, Bearing
10					GEAR SET, Rear Axle Ring And Pinion
	J813 2699	1			2.73 Ratio
	J813 2700	1			3.31 Ratio
	J813 3179	1			3.73 Ratio
	J448 6825	1			3.54 Ratio
	J812 7072	1			4.10 Ratio
	J813 4410	1			4.56 Ratio
11	J448 6828	1			BOLT, Package
12					CASE ASSEMBLY, Differential
	J323 9844	1			2.73 Ratio
	J321 2192	1			3.31, 3.54, 3.73, 4.10, 4.56 Ratios
13	J812 0326	1			GEAR SET, Differential
14	J812 0325	1			DISC PACKAGE, Differential ***
15	J320 5532	1			SHIM PACKAGE (18), Case ***
16	J317 2565	2			CONE, Bearing
17	J317 2566	2			CUP, Bearing
18	J812 1787	2			RING, Snap
19	J316 2323	1			BLOCK

MODEL CODES

16=Cherokee 2 Dr.(1981-83)
17=Cherokee 2 Dr.(1981-83)
73=Cherokee 2WD-2 Dr.(1984-86)
74=Cherokee 2WD-4 Dr.(1984-86)
18=Cherokee 4 Dr.(1981-83)
77=Cherokee 4WD-2 Dr.(1984-86)
78=Cherokee 4WD-4 Dr.(1984-86)
85=CJ-5 (1981-83)
86=CJ-6(1981)
87=CJ-7(1981-86)
88=CJ-8, Scrambler(1981-86)
64=Comanche 2WD-6 Ft. Box(1986)
66=Comanche 2WD-7 Ft. Box(1986)
63=Comanche 4WD-6 Ft. Box(1986)
65=Comanche 4WD-7 Ft. Box(1986)
15=Grand Wagoneer 4 Dr.(1984-86)
25=J-10 Truck 7 Ft. Box(1981-84)
26=J10 Truck 8 Ft. Box(1981-86)
27=J-20 Truck 8 Ft. Box(1981-86)
15=Wagoneer 4 Dr.(1981-83)
75=Wagoneer 4WD-4 Dr.(1984-86)

BODY
CJ=CJ-5, CJ-6, CJ-7, CJ-8, Scrambler(1981-86)
MJ=Comanche Pickup(1986)

STYLES
SJ=Wagoneer(1981-83), Grand Wagoneer(1984-86), Cherokee(1981-83), J-10, J-20(1981-86)
XJ=Wagoneer(1984-86), Cherokee(1984-86)

AR = Use as Required - = Non Illustrated Part P.A.R. = Paint as Required

« RETURN TO GROUP INDEX

SHAFTS, REAR AXLE AMC LARGE AXLE CJ-5,6,7,8, SCRAMBLER
Figure 3-500

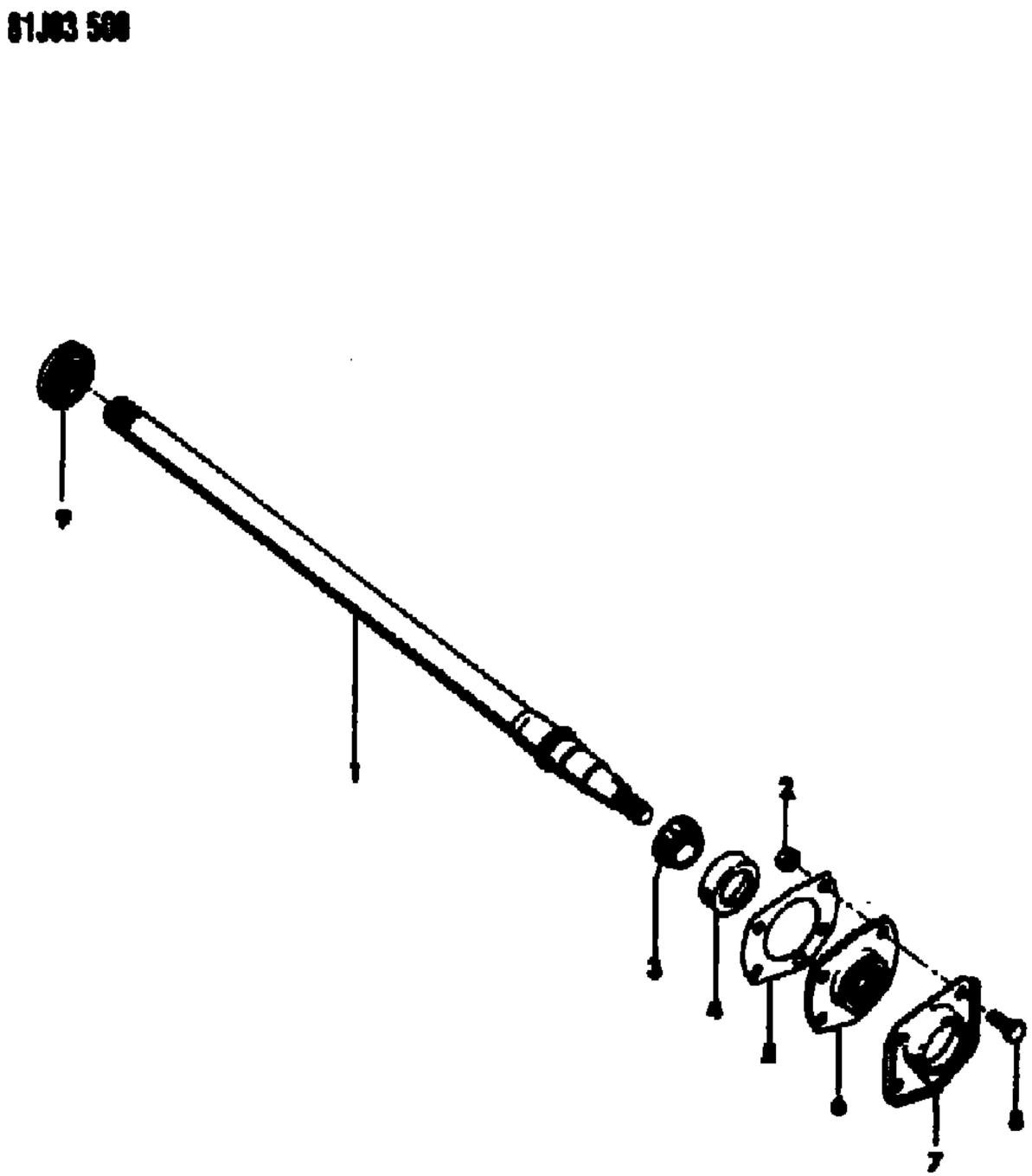

ITEM	PART NUMBER	QTY	BODY	MODEL	DESCRIPTION
1					SHAFT, Axle
					Right
	J812 7071	1			1981
	J812 7071	1		85,86	1982-83
	J813 3886	1		87,88	1982-86
					Left
	J812 7070	1			1981
	J812 7070	1		85,86	1982-83
	J813 3885	1		87,88	1982-86
2	J400 1239	8			NUT
3	J315 0046	2			CONE, Bearing
4	J536 0955	2			CUP, Bearing
5					SPACER
	J314 1319	AR			.003" Thick
	J314 1320	AR			.010" Thick
6	J448 5691	2			SEAL
7	J318 4573	2			RETAINER
7	J318 4573	2			RETAINER
8	J314 3794	8			BOLT
9	J317 0700	2			SEAL

MODEL CODES

16=Cherokee 2 Dr.(1981-83)
17=Cherokee 2 Dr.(1981-83)
73=Cherokee 2WD-2 Dr.(1984-86)
74=Cherokee 2WD-4 Dr.(1984-86)
18=Cherokee 4 Dr.(1981-83)
77=Cherokee 4WD-2 Dr.(1984-86)
78=Cherokee 4WD-4 Dr.(1984-86)
85=CJ-5 (1981-83)
86=CJ-6(1981)
87=CJ-7(1981-86)
88=CJ-8, Scrambler(1981-86)
64=Comanche 2WD-6 Ft. Box(1986)
66=Comanche 2WD-7 Ft. Box(1986)
63=Comanche 4WD-6 Ft. Box(1986)
65=Comanche 4WD-7 Ft. Box(1986)
15=Grand Wagoneer 4 Dr.(1984-86)
25=J-10 Truck 7 Ft. Box(1981-84)
26=J10 Truck 8 Ft. Box(1981-86)
27=J-20 Truck 8 Ft. Box(1981-86)
15=Wagoneer 4 Dr.(1981-83)
75=Wagoneer 4WD-4 Dr.(1984-86)

BODY
CJ=CJ-5, CJ-6, CJ-7, CJ-8, Scrambler(1981-86)
MJ=Comanche Pickup(1986)

STYLES
SJ=Wagoneer(1981-83), Grand Wagoneer(1984-86), Cherokee(1981-83), J-10, J-20(1981-86)
XJ=Wagoneer(1984-86), Cherokee(1984-86)

AR = Use as Required - = Non Illustrated Part P.A.R. = Paint as Required

« RETURN TO GROUP INDEX

AXLE HOUSING, REAR DANA MODEL 44 CJ-7,8, SCRAMBLER
Figure 3-600

81J03 600

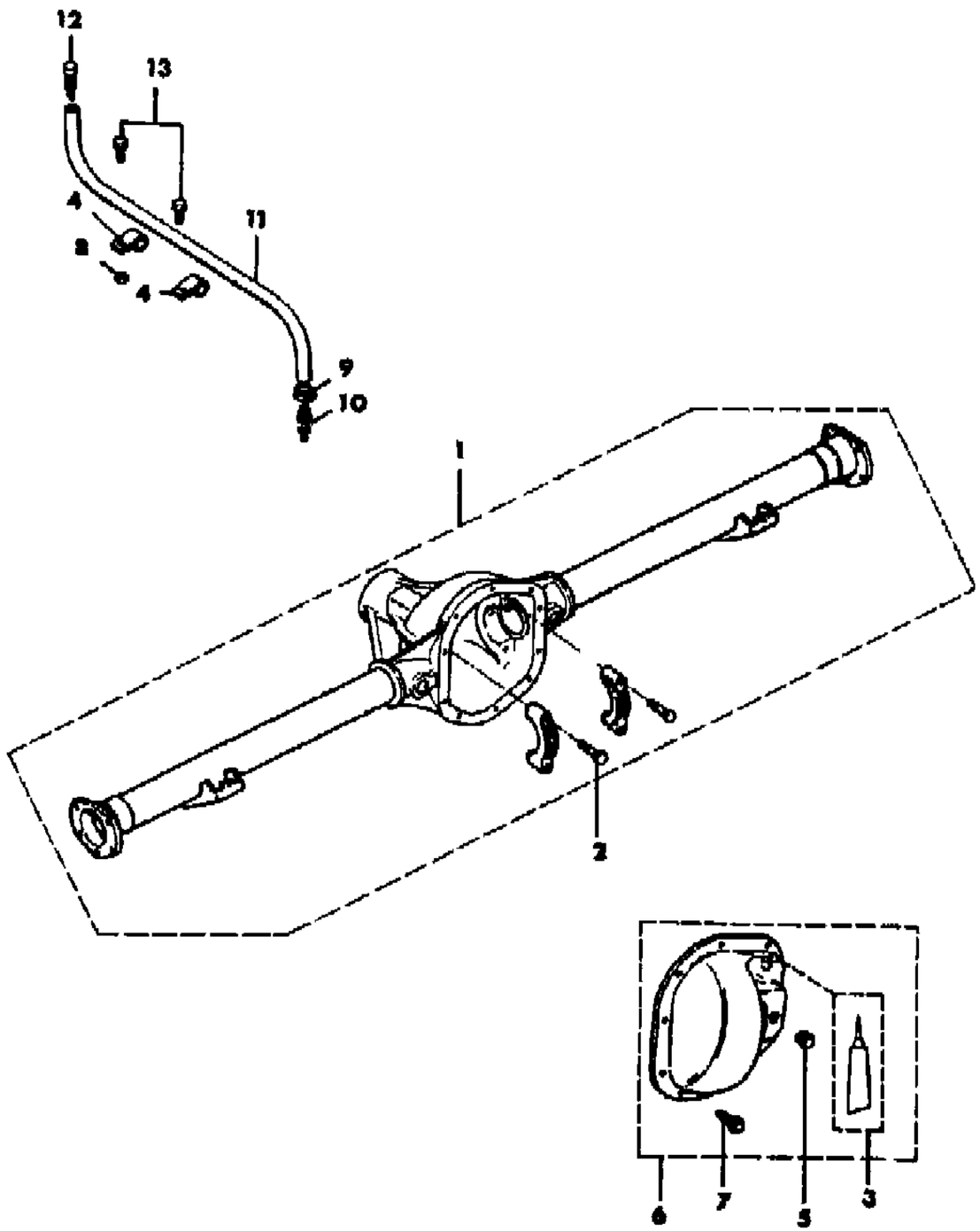

ITEM	PART NUMBER	QTY	BODY	MODEL	DESCRIPTION
1	8350 3071	1			HOUSING, Axle
2	8350 1515	4			BOLT
3	J899 3317	AR			SEALER
4	J014 0780	2			CLIP
5	8350 1571	1			PLUG
6	8350 3058	1			COVER
7	J099 1546	10			BOLT
8	J012 0361	1			NUT
9	J322 7851	1			CLAMP
10	J318 7999	1			HOSE
11	J812 5823	1			HOSE
12	J535 2955	1			BREATHER
13	J400 5063	1			SCREW

MODEL CODES
16=Cherokee 2 Dr.(1981-83)
17=Cherokee 2 Dr.(1981-83)
73=Cherokee 2WD-2 Dr.(1984-86)
74=Cherokee 2WD-4 Dr.(1984-86)
18=Cherokee 4 Dr.(1981-83)
77=Cherokee 4WD-2 Dr.(1984-86)
78=Cherokee 4WD-4 Dr.(1984-86)
85=CJ-5 (1981-83)
86=CJ-6(1981)
87=CJ-7(1981-86)
88=CJ-8, Scrambler(1981-86)
64=Comanche 2WD-6 Ft. Box(1986)
66=Comanche 2WD-7 Ft. Box(1986)
63=Comanche 4WD-6 Ft. Box(1986)
65=Comanche 4WD-7 Ft. Box(1986)
15=Grand Wagoneer 4 Dr.(1984-86)
25=J-10 Truck 7 Ft. Box(1981-84)
26=J10 Truck 8 Ft. Box(1981-86)
27=J-20 Truck 8 Ft. Box(1981-86)
15=Wagoneer 4 Dr.(1981-83)
75=Wagoneer 4WD-4 Dr.(1984-86)

BODY
CJ=CJ-5, CJ-6, CJ-7, CJ-8, Scrambler(1981-86)
MJ=Comanche Pickup(1986)

STYLES
SJ=Wagoneer(1981-83), Grand Wagoneer(1984-86), Cherokee(1981-83), J-10, J-20(1981-86)
XJ=Wagoneer(1984-86), Cherokee(1984-86)

AR = Use as Required - = Non Illustrated Part P.A.R. = Paint as Required

« RETURN TO GROUP INDEX

DIFFERENTIAL AND GEARS, REAR AXLE DANA MODEL 44, NON-LOCKING CJ-7,8, SCRAMBLER
Figure 3-700

81J03 700

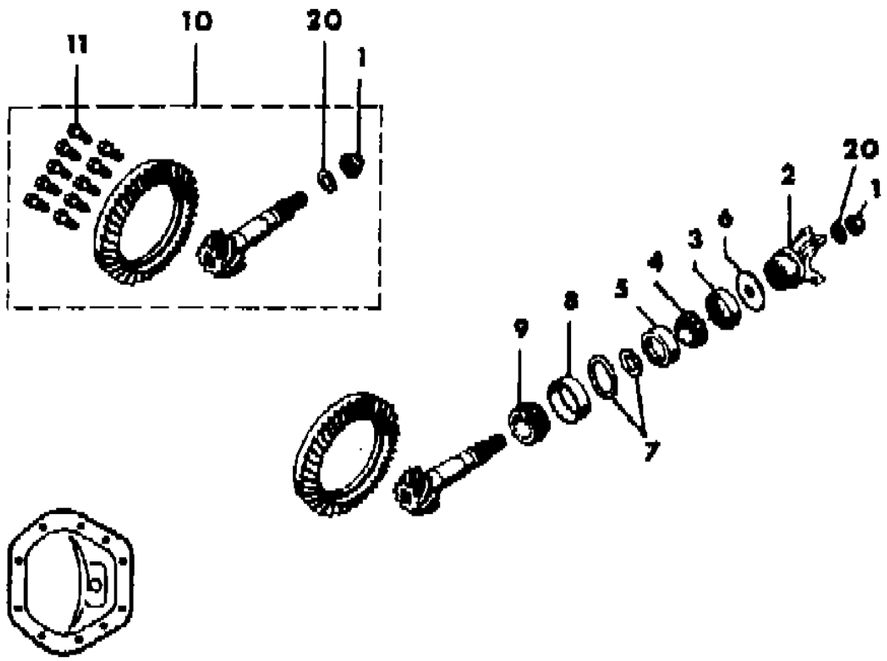

DANA MODEL 44 AXLE (REF.)

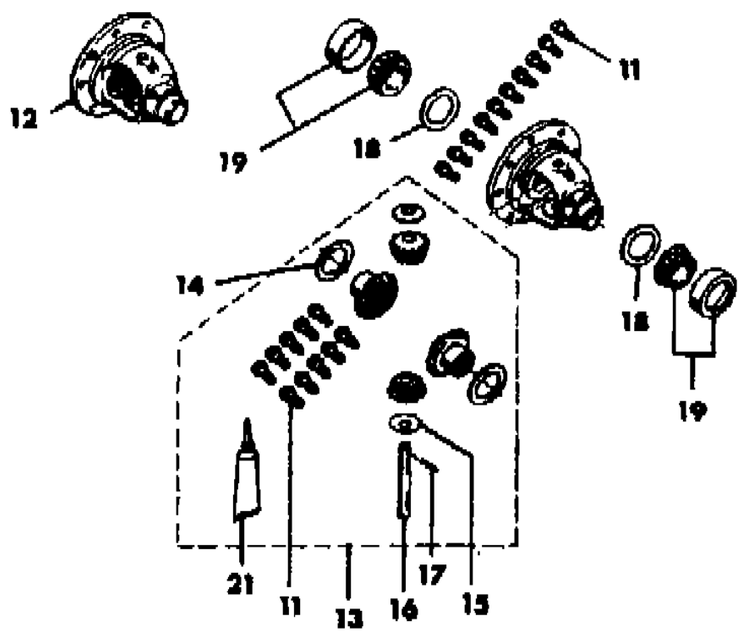

ITEM	PART NUMBER	QTY	BODY	MODEL	DESCRIPTION
1	J080 1367	1			NUT, Pinion
2					YOKE, Pinion
	J813 3241	1			With Dust Slinger on Yoke
	8350 3388	1			Without Dust Slinger on Yoke
3					SEAL, Pinion
	J099 8092	1			With Dust Slinger on Yoke
	8350 3390	1			Without Dust Slinger on Yoke
4	J005 2878	1			CONE, Bearing
5	J005 2879	1			CUP, Bearing
6	J063 6566	1			SLINGER
7	J812 9221	1			SHIM PACKAGE (15), Pinion ***
8	J005 2877	1			CUP, Bearing
9	J080 7266	1			CONE, Bearing
10					GEAR SET, Rear Axle Ring and Pinion
	J813 4222	1			2.72 Ratio
	J813 4219	1			3.31 Ratio
	J812 9217	1			3.54 Ratio
	J812 9225	1			4.09 Ratio
	8350 3087	1			4.56 Ratio
11	J064 9454	10			BOLT
12					CASE ASSEMBLY, Differential
	8350 3073	1			2.72, 3.31, 3.54 Ratios
	8350 3067	1			4.09, 4.56 Ratios
13	8350 3068	1			GEAR SET, Differential
14	J080 5325	2			WASHER, Side Gear
15	J064 5790	2			WASHER, Pinion Gear
16	8350 3069	1			SHAFT, Differential
17	J063 6360	1			PIN
18	J812 9222	1			SHIM PACKAGE (8), Case ***
19	J812 4071	1			BEARING PACKAGE ***
20	J063 6570	1			WASHER
21	J899 3317	1			SEALER

MODEL CODES

16=Cherokee 2 Dr.(1981-83)	78=Cherokee 4WD-4 Dr.(1984-86)	64=Comanche 2WD-6 Ft. Box(1986)	25=J-10 Truck 7 Ft. Box(1981-84)
17=Cherokee 2 Dr.(1981-83)	85=CJ-5 (1981-83)	66=Comanche 2WD-7 Ft. Box(1986)	26=J10 Truck 8 Ft. Box(1981-86)
73=Cherokee 2WD-2 Dr.(1984-86)	86=CJ-6(1981)	63=Comanche 4WD-6 Ft. Box(1986)	27=J-20 Truck 8 Ft. Box(1981-86)
74=Cherokee 2WD-4 Dr.(1984-86)	87=CJ-7(1981-86)	65=Comanche 4WD-7 Ft. Box(1986)	15=Wagoneer 4 Dr.(1981-83)
18=Cherokee 4 Dr.(1981-83)	88=CJ-8, Scrambler(1981-86)	15=Grand Wagoneer 4 Dr.(1984-86)	75=Wagoneer 4WD-4 Dr.(1984-86)
77=Cherokee 4WD-2 Dr.(1984-86)			

BODY
CJ=CJ-5, CJ-6, CJ-7, CJ-8, Scrambler(1981-86)
MJ=Comanche Pickup(1986)

STYLES
SJ=Wagoneer(1981-83), Grand Wagoneer(1984-86), Cherokee(1981-83), J-10, J-20(1981-86)
XJ=Wagoneer(1984-86), Cherokee(1984-86)

AR = Use as Required - = Non Illustrated Part P.A.R. = Paint as Required

« RETURN TO GROUP INDEX

DIFERENTIAL AND GEARS, REAR AXLE DANA MODEL 44, LOCKING CJ-7,8, SCRAMBLER
Figure 3-800

81J03 800

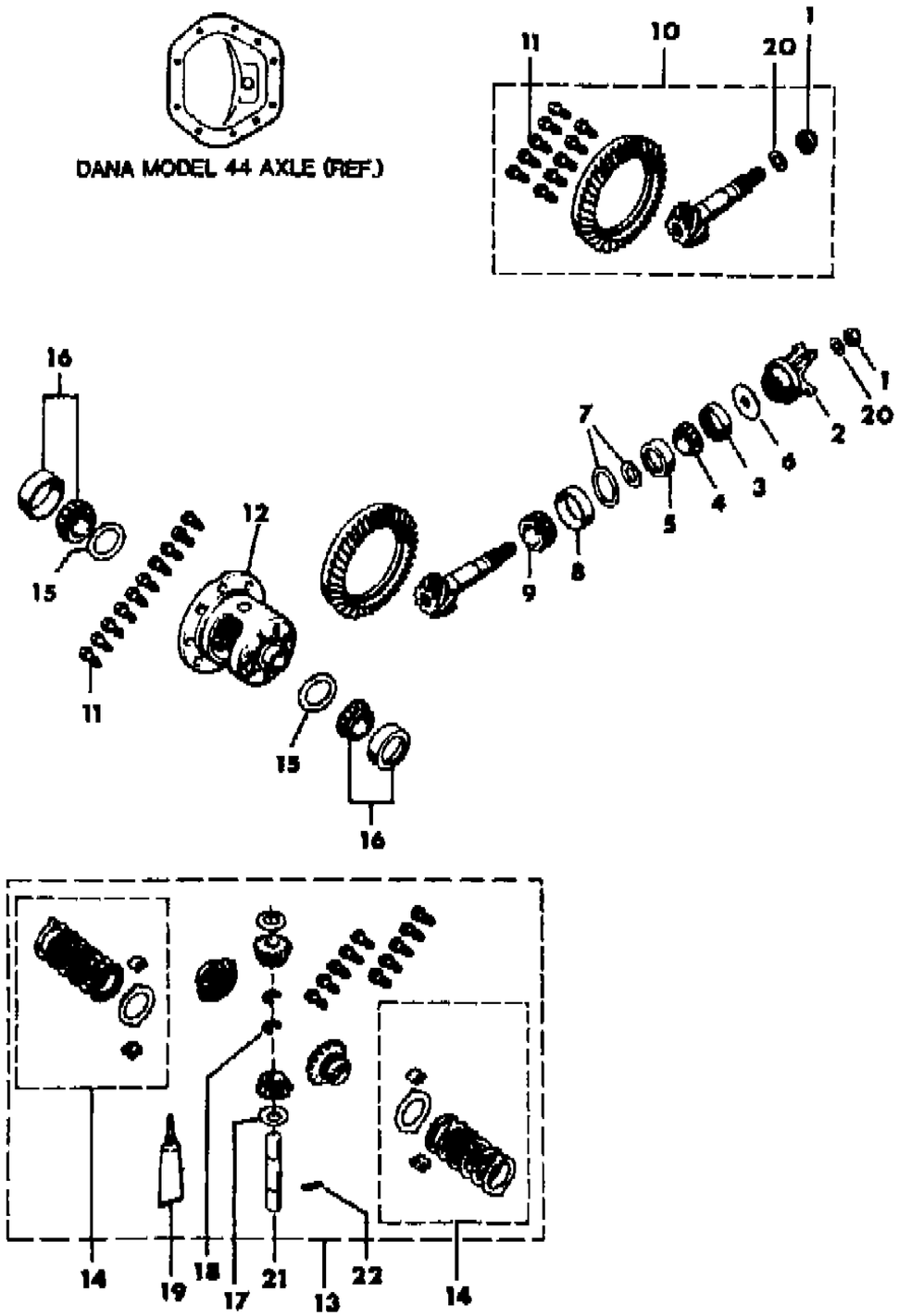

ITEM	PART NUMBER	QTY	BODY	MODEL	DESCRIPTION
1	J080 1367	1			NUT, Pinion
2					YOKE, Pinion
	J813 3241	1			With Dust Slinger on Yoke
	8350 3388	1			Without Dust Slinger on Yoke
3					SEAL, Pinion
	J099 8092	1			With Dust Slinger on Yoke
	8350 3390	1			Without Dust Slinger on Yoke
4	J005 2878	1			CONE, Bearing
5	J005 2879	1			CUP, Bearing
6	J063 6566	1			Slinger ***
7	J812 9221	1			SHIM PACKAGE (15), Pinion ***
8	J005 2877	1			CUP, Bearing
9	J080 7266	1			CONE, Bearing
10					GEAR SET, Rear Axle Ring and Pinion
	J813 4222	1			2.72 Ratio
	J813 4219	1			3.31 Ratio
	J812 9217	1			3.54 Ratio
	J812 9225	1			4.09 Ratio
	8350 3087	1			4.56 Ratio
11	J064 9454	10			BOLT
12					CASE ASSEMBLY, Differential
	J812 9218	1			2.72, 3.31, 3.54 Ratios
	J812 9232	1			4.09, 4.56 Ratios
13					GEAR SET, Differential
	J812 9220	1			Cross Shaft secured by two Retaining Rings
	8350 5432	1			Cross Shaft Secured by a Roll Pin
14	J099 4345	1			DISC PACKAGE, Differential ***
15	J812 9222	1			SHIM PACKAGE (8), Case ***
16	J812 4071	1			BEARING PACKAGE ***
17	J064 5790	2			WASHER, Pinion Gear
18	8350 3070	2			RING, Snap
19	J899 3317	1			SEALER
20	J063 6570	1			WASHER
21	8350 3069	1			SHAFT, Secured by two Retaining Rings
22	J063 6360	1			PIN, Cross Shaft

MODEL CODES

16=Cherokee 2 Dr.(1981-83)
17=Cherokee 2 Dr.(1981-83)
73=Cherokee 2WD-2 Dr.(1984-86)
74=Cherokee 2WD-4 Dr.(1984-86)
18=Cherokee 4 Dr.(1981-83)
77=Cherokee 4WD-2 Dr.(1984-86)
78=Cherokee 4WD-4 Dr.(1984-86)
85=CJ-5 (1981-83)
86=CJ-6(1981)
87=CJ-7(1981-86)
88=CJ-8, Scrambler(1981-86)
64=Comanche 2WD-6 Ft. Box(1986)
66=Comanche 2WD-7 Ft. Box(1986)
63=Comanche 4WD-6 Ft. Box(1986)
65=Comanche 4WD-7 Ft. Box(1986)
15=Grand Wagoneer 4 Dr.(1984-86)
25=J-10 Truck 7 Ft. Box(1981-84)
26=J10 Truck 8 Ft. Box(1981-86)
27=J-20 Truck 8 Ft. Box(1981-86)
15=Wagoneer 4 Dr.(1981-83)
75=Wagoneer 4WD-4 Dr.(1984-86)

BODY
CJ=CJ-5, CJ-6, CJ-7, CJ-8, Scrambler(1981-86)
MJ=Comanche Pickup(1986)

STYLES
SJ=Wagoneer(1981-83), Grand Wagoneer(1984-86), Cherokee(1981-83), J-10, J-20(1981-86)
XJ=Wagoneer(1984-86), Cherokee(1984-86)

AR = Use as Required - = Non Illustrated Part P.A.R. = Paint as Required

« RETURN TO GROUP INDEX

SHAFTS, REAR AXLE DANA MODEL 44 CJ-7,8, SCRAMBLER
Figure 3-900

81J03 900

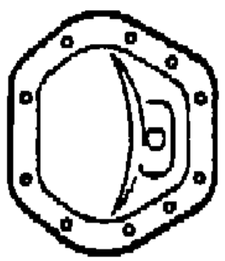

DANA MODEL 44 AXLE (REF.)

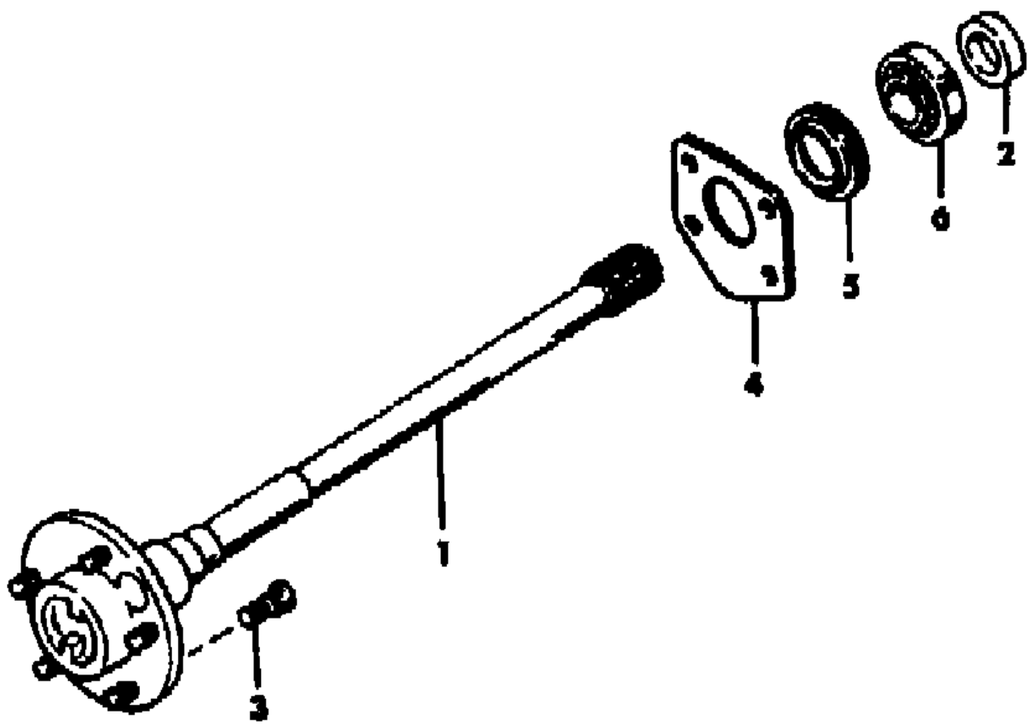

ITEM	PART NUMBER	QTY	BODY	MODEL	DESCRIPTION
1					SHAFT, Axle
	8350 3074	1			Right
	8350 3075	1			Left
2	8350 3077	2			RING, Retaining
3	J535 5719	10			STUD, Wheel
4	8350 4190	2			RETAINER
5	J324 0086	2			SEAL
6	J323 0115	2			BEARING

MODEL CODES

16=Cherokee 2 Dr.(1981-83)
17=Cherokee 2 Dr.(1981-83)
73=Cherokee 2WD-2 Dr.(1984-86)
74=Cherokee 2WD-4 Dr.(1984-86)
18=Cherokee 4 Dr.(1981-83)
77=Cherokee 4WD-2 Dr.(1984-86)
78=Cherokee 4WD-4 Dr.(1984-86)
85=CJ-5 (1981-83)
86=CJ-6(1981)
87=CJ-7(1981-86)
88=CJ-8, Scrambler(1981-86)
64=Comanche 2WD-6 Ft. Box(1986)
66=Comanche 2WD-7 Ft. Box(1986)
63=Comanche 4WD-6 Ft. Box(1986)
65=Comanche 4WD-7 Ft. Box(1986)
15=Grand Wagoneer 4 Dr.(1984-86)
25=J-10 Truck 7 Ft. Box(1981-84)
26=J10 Truck 8 Ft. Box(1981-86)
27=J-20 Truck 8 Ft. Box(1981-86)
15=Wagoneer 4 Dr.(1981-83)
75=Wagoneer 4WD-4 Dr.(1984-86)

BODY
CJ=CJ-5, CJ-6, CJ-7, CJ-8, Scrambler(1981-86)
MJ=Comanche Pickup(1986)

STYLES
SJ=Wagoneer(1981-83), Grand Wagoneer(1984-86), Cherokee(1981-83), J-10, J-20(1981-86)
XJ=Wagoneer(1984-86), Cherokee(1984-86)

AR = Use as Required - = Non Illustrated Part P.A.R. = Paint as Required

« RETURN TO GROUP INDEX

AXLE ASSEMBLY, REAR AMC OR DANA MODEL 35 XJ CHEROKEE, XJ WAGONEER, COMANCHE
Figure 3-1000

81J03 1000

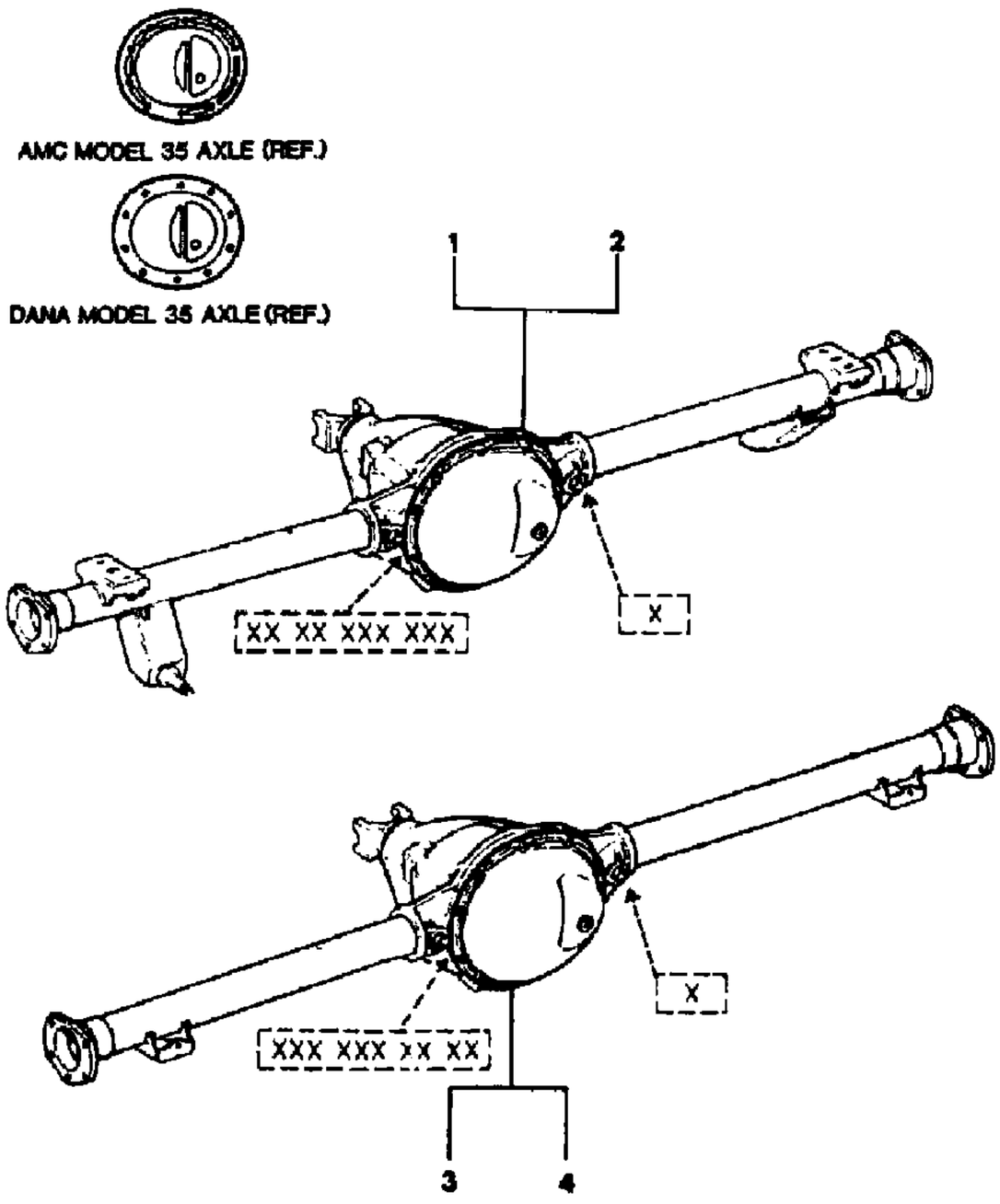

ITEM	PART NUMBER	QTY	BODY	MODEL	DESCRIPTION
1			XJ		AXLE ASSEMBLY, Without Locking Differential ***
	5300 1317	1			1984-85: 3.31 Ratio, With System Sentry, Stamped T
	5300 0934	1			1984-85: 3.31 Ratio, Without System Sentry, Stamped T
	5300 1319	1			1984-85: 3.73 Ratio, With System Sentry, Stamped S
	5300 0462	1			1984-85: 3.73 Ratio, Without System Sentry, Stamped S
	5300 0934	1			1986: 3.31 Ratio, Stamped T or Tagged 8953004215
	8350 3024	1			1986: 3.31 Ratio, Tagged 8953004512
	8350 3009	1			1986: 3.31 Ratio, Tagged 8953004043
	5300 0463	1			1986: 3.54 Ratio, Stamped E or Tagged 8953004216
	8350 3025	1			1986: 3.54 Ratio, Tagged 8953004513
	8350 3011	1			1986: 3.54 Ratio, Tagged 8953003692
	5300 0464	1			1986: 4.11 Ratio, Stamped K or Tagged 8953004217
	8350 3026	1			1986: 4.11 Ratio, Tagged 8953004514
	8350 3012	1			1986: 4.11 Ratio, Tagged 8953003695
2			XJ		AXLE ASSEMBLY, With Locking Differential ***
	5300 0984	1			1984-85: 3.31 Ratio, Without System Sentry, Stamped TT
	5300 0985	1			1984-85: 3.73 Ratio, Without System Sentry, Stamped SS
	5300 3483	1			1986: 4.11 Ratio, Stamped KK or Tagged 8953004218
	8350 3027	1			1986: 4.11 Ratio, Tagged 8953004515
	8350 3013	1			1986: 4.11 Ratio, Tagged 8953003693
3			MJ		AXLE ASSEMBLY, Without Locking Differential ***
	5300 3878	1			3.31 Ratio, Stamped T or Tagged 8953004219
	8350 3029	1			3.31 Ratio, Tagged 8953004516
	8350 3015	1			3.31 Ratio, Tagged 8953004045 or 8953004768
	5300 1686	1			3.54 Ratio, Stamped E or Tagged 8953004220
	8350 3030	1			3.54 Ratio, Tagged 8953004517
	8350 3016	1			3.54 Ratio, Tagged 8953003697
	8350 3391	1			3.55 Ratio. Tagged 8953004697
	5300 1687	1			4.11 Ratio, Stamped K or Tagged 8953004221
	8350 3031	1			4.11 Ratio, Tagged 8953004518
	8350 3017	1			4.11 Ratio. Tagged 8953003699
4			MJ		AXLE ASSEMBLY, With Locking Differential ***
	5300 3880	1			4.11 Ratio, Stamped KK or Tagged 8953004222
	8350 3032	1			4.11 Ratio, Tagged 8953004519
	8350 3020	1			4.11 Ratio, Tagged 8953003698

MODEL CODES

16=Cherokee 2 Dr.(1981-83)	78=Cherokee 4WD-4 Dr.(1984-86)	64=Comanche 2WD-6 Ft. Box(1986)	25=J-10 Truck 7 Ft. Box(1981-84)
17=Cherokee 2 Dr.(1981-83)	85=CJ-5 (1981-83)	66=Comanche 2WD-7 Ft. Box(1986)	26=J10 Truck 8 Ft. Box(1981-86)
73=Cherokee 2WD-2 Dr.(1984-86)	86=CJ-6(1981)	63=Comanche 4WD-6 Ft. Box(1986)	27=J-20 Truck 8 Ft. Box(1981-86)
74=Cherokee 2WD-4 Dr.(1984-86)	87=CJ-7(1981-86)	65=Comanche 4WD-7 Ft. Box(1986)	15=Wagoneer 4 Dr.(1981-83)
18=Cherokee 4 Dr.(1981-83)	88=CJ-8, Scrambler(1981-86)	15=Grand Wagoneer 4 Dr.(1984-86)	75=Wagoneer 4WD-4 Dr.(1984-86)
77=Cherokee 4WD-2 Dr.(1984-86)			

BODY
CJ=CJ-5, CJ-6, CJ-7, CJ-8, Scrambler(1981-86)
MJ=Comanche Pickup(1986)

STYLES
SJ=Wagoneer(1981-83), Grand Wagoneer(1984-86), Cherokee(1981-83), J-10, J-20(1981-86)
XJ=Wagoneer(1984-86), Cherokee(1984-86)

AR = Use as Required - = Non Illustrated Part P.A.R. = Paint as Required

« RETURN TO GROUP INDEX

AXLE HOUSING, REAR AMC OR DANA MODEL 35 XJ CHEROKEE, XJ WAGONEER, COMANCHE
Figure 3-1100

81J03 1100

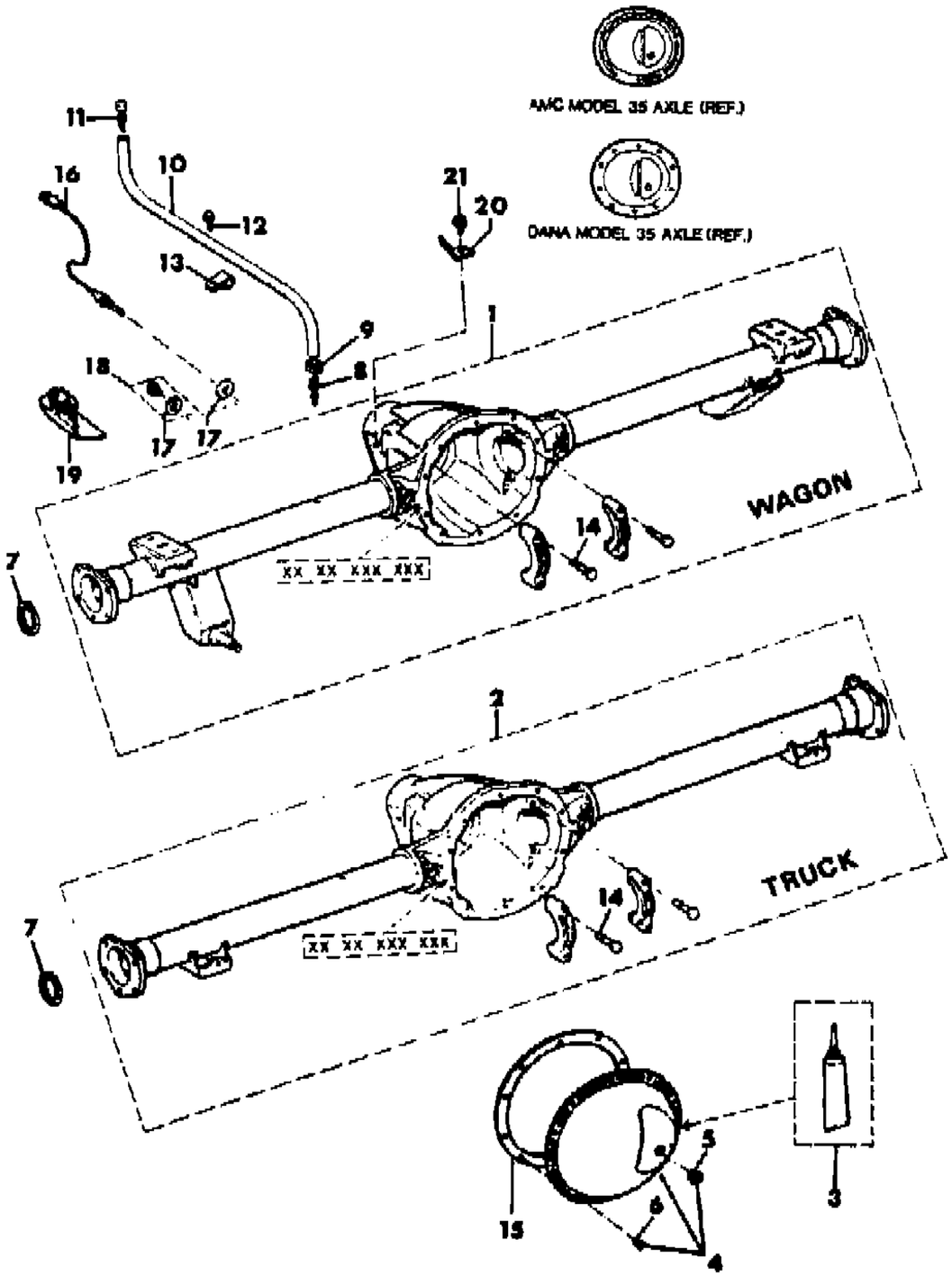

ITEM	PART NUMBER	QTY	BODY	MODEL	DESCRIPTION
1			XJ		HOUSING, Axle
	8350 0139	1			1984-85
	8350 3023	1			1986: Stamped T,E,K,KK or Tagged 8953004215, 8953004216, 8953004217, 8953004218, 8953004512, 8953004513, 8953004514, 8353003695 or 8953004515
	8350 3008	1			1986: Tagged 8953003692, 8953004043 or 8953003693
2			MJ		HOUSING, Axle
	8350 2507	1			Stamped T,E,K,KK or Tagged 8953004516, 8953004517, 8953004518 or 8953004519
	8350 3014	1			Tagged 8953004045, 8953003697, 8953003698, 8953003699, 8953004697 or 8953004768
3	J899 3317	1			SEALER
4	8350 5125	1			COVER PACKAGE
5	J400 5725	1			PLUG
6	J400 4514	10			BOLT
7					SEAL
	5300 0476	2	XJ		1984-85
	5300 0476	2	XJ		1986: Stamped T,E,K,KK or Tagged 8953004215, 8953004216, 8953004217, 8953004218, 8953004512, 8953004513, 8353003695 or 8953004515
	8350 3010	2	XJ		1986: Tagged 8953003692, 8953004043 or 8953003693
	5300 0476	2	MJ		Stamped T,E,K,KK or Tagged 8953004219, 8953004220, 8953004221, 8953004222, 8953004516, 8953004517, 8953004518 or 8953004519
	8350 3010	1	MJ		Tagged 8953004045, 8953003697, 8953003698, 8953003699, 8953004697 or 8953004768
8	J318 7999	1			VENT
9	J322 7851	1			CLAMP
10	J318 7627	1			HOSE, Vent
11	J535 2955	1			BREATHER
12	J942 6241	1			SCREW
13	J012 0526	1			CLIP
14	J400 6553	4			BOLT
15	J322 9429	1			GASKET
16	5300 0376	1			SENSOR, System Sentry
17	3300 0322	1			GASKET
18	8350 0271	1			PLUG PACKAGE, Without System Sentry ***
19	5300 1425	1			SHIELD, System Sentry Sensor
20	5300 1440	1			BRACKET

MODEL CODES
16=Cherokee 2 Dr.(1981-83)
17=Cherokee 2 Dr.(1981-83)
73=Cherokee 2WD-2 Dr.(1984-86)
74=Cherokee 2WD-4 Dr.(1984-86)
18=Cherokee 4 Dr.(1981-83)
77=Cherokee 4WD-2 Dr.(1984-86)
78=Cherokee 4WD-4 Dr.(1984-86)
85=CJ-5 (1981-83)
86=CJ-6(1981)
87=CJ-7(1981-86)
88=CJ-8, Scrambler(1981-86)
64=Comanche 2WD-6 Ft. Box(1986)
66=Comanche 2WD-7 Ft. Box(1986)
63=Comanche 4WD-6 Ft. Box(1986)
65=Comanche 4WD-7 Ft. Box(1986)
15=Grand Wagoneer 4 Dr.(1984-86)
25=J-10 Truck 7 Ft. Box(1981-84)
26=J10 Truck 8 Ft. Box(1981-86)
27=J-20 Truck 8 Ft. Box(1981-86)
15=Wagoneer 4 Dr.(1981-83)
75=Wagoneer 4WD-4 Dr.(1984-86)

BODY
CJ=CJ-5, CJ-6, CJ-7, CJ-8, Scrambler(1981-86)
MJ=Comanche Pickup(1986)

STYLES
SJ=Wagoneer(1981-83), Grand Wagoneer(1984-86), Cherokee(1981-83), J-10, J-20(1981-86)
XJ=Wagoneer(1984-86), Cherokee(1984-86)

AR = Use as Required - = Non Illustrated Part P.A.R. = Paint as Required

AXLE HOUSING, REAR AMC OR DANA MODEL 35 XJ CHEROKEE, XJ WAGONEER, COMANCHE
Figure 3-1100

81J03 1100

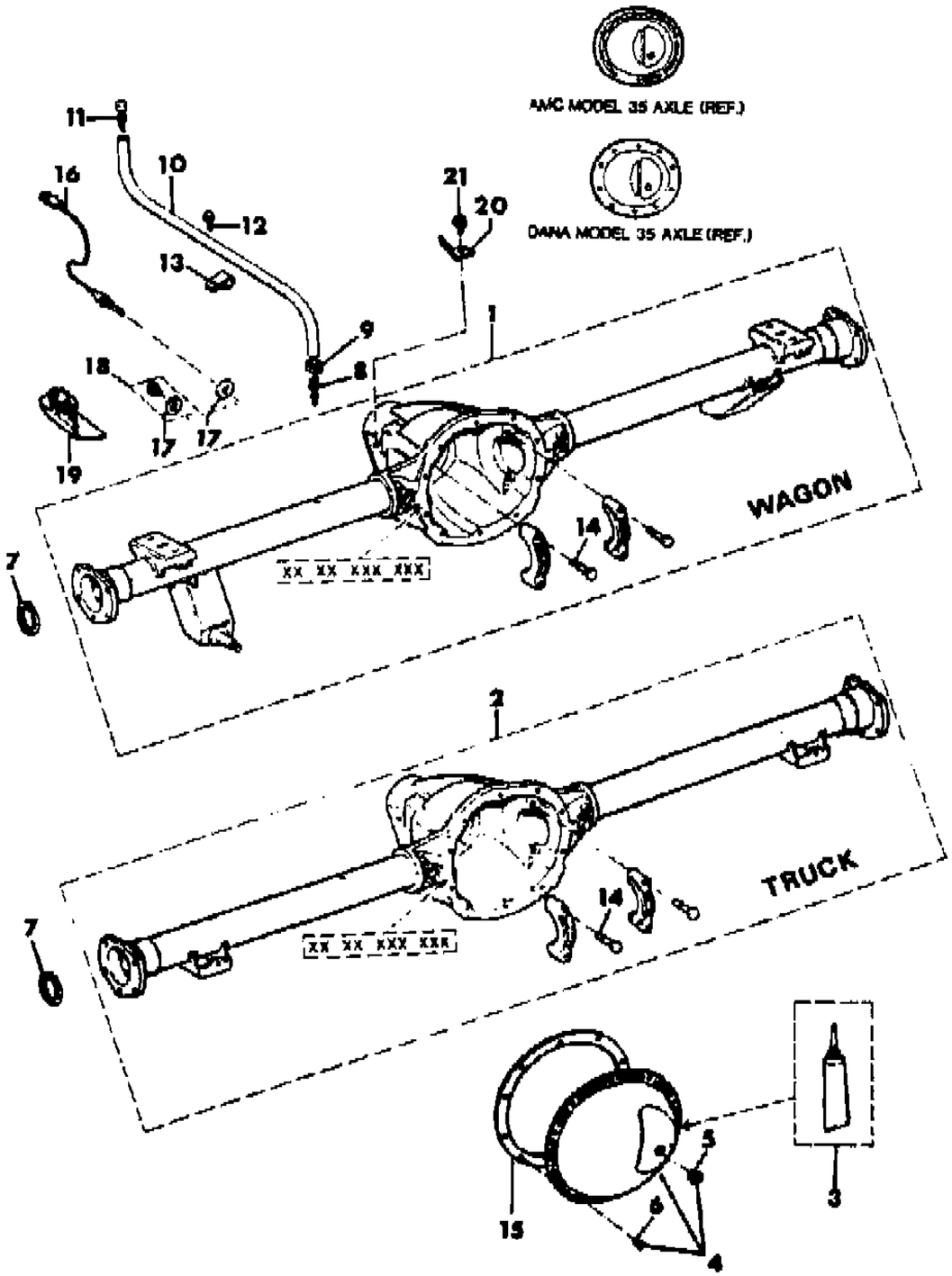

ITEM	PART NUMBER	QTY	BODY	MODEL	DESCRIPTION
21	3420 1871	1			SCREW

MODEL CODES

16=Cherokee 2 Dr.(1981-83)	78=Cherokee 4WD-4 Dr.(1984-86)	64=Comanche 2WD-6 Ft. Box(1986)	25=J-10 Truck 7 Ft. Box(1981-84)
17=Cherokee 2 Dr.(1981-83)	85=CJ-5 (1981-83)	66=Comanche 2WD-7 Ft. Box(1986)	26=J10 Truck 8 Ft. Box(1981-86)
73=Cherokee 2WD-2 Dr.(1984-86)	86=CJ-6(1981)	63=Comanche 4WD-6 Ft. Box(1986)	27=J-20 Truck 8 Ft. Box(1981-86)
74=Cherokee 2WD-4 Dr.(1984-86)	87=CJ-7(1981-86)	65=Comanche 4WD-7 Ft. Box(1986)	15=Wagoneer 4 Dr.(1981-83)
18=Cherokee 4 Dr.(1981-83)	88=CJ-8, Scrambler(1981-86)	15=Grand Wagoneer 4 Dr.(1984-86)	75=Wagoneer 4WD-4 Dr.(1984-86)
77=Cherokee 4WD-2 Dr.(1984-86)			

BODY
CJ=CJ-5, CJ-6, CJ-7, CJ-8, Scrambler(1981-86)
MJ=Comanche Pickup(1986)

STYLES
SJ=Wagoneer(1981-83), Grand Wagoneer(1984-86), Cherokee(1981-83), J-10, J-20(1981-86)
XJ=Wagoneer(1984-86), Cherokee(1984-86)

AR = Use as Required - = Non Illustrated Part P.A.R. = Paint as Required

« RETURN TO GROUP INDEX

DIFFERRENTIAL AND GEARS, REAR AXLE AMC OR DANA MODEL 35, NON-LOCKING XJ CHEROKEE, XJ WAGONEER, COMANCHE
Figure 3-1200

81J03 1200

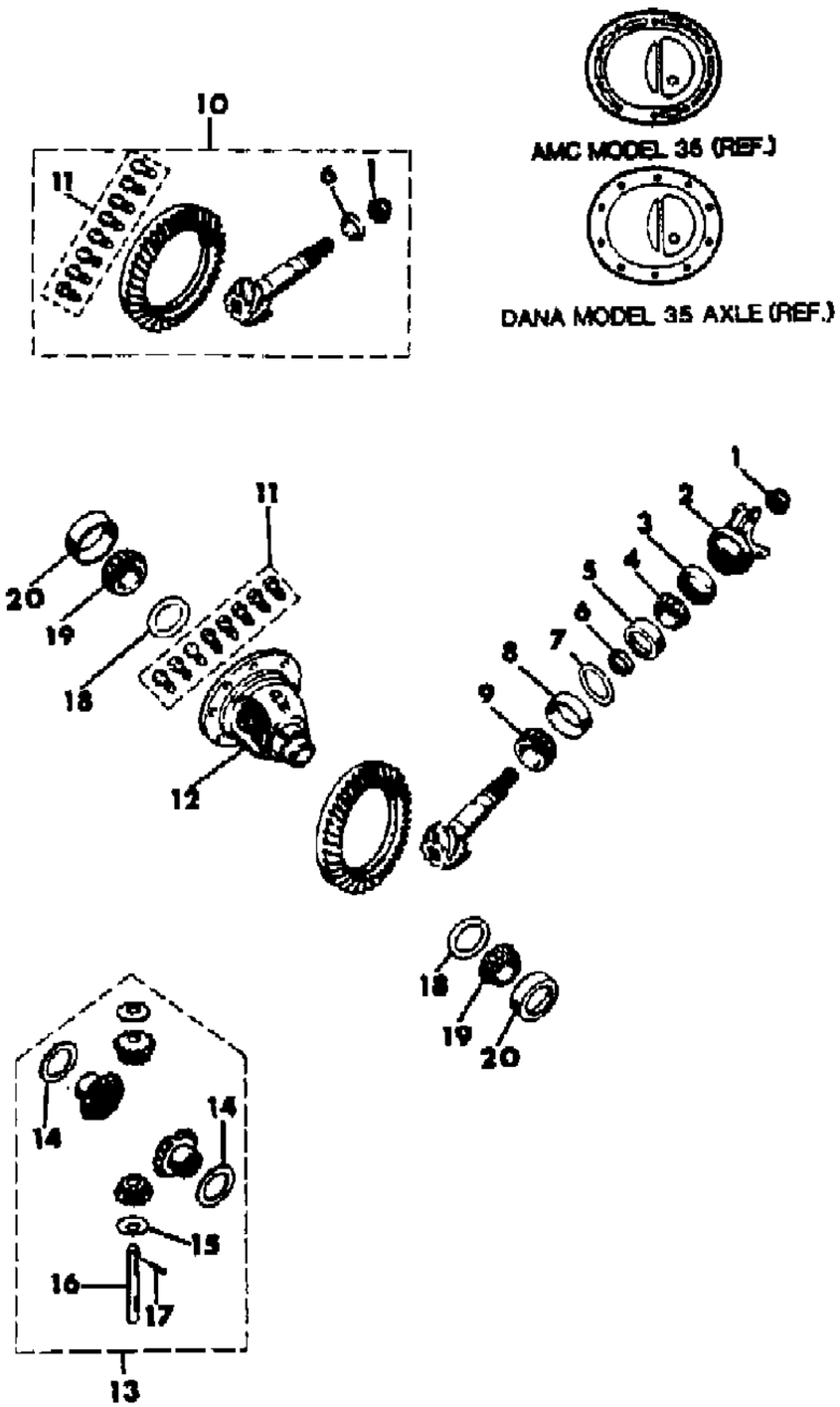

ITEM	PART NUMBER	QTY	BODY	MODEL	DESCRIPTION
1	J318 2601	1			NUT, Pinion
2	8350 3318	1			YOKE, Pinion
3	5300 2642	1			SEAL, Pinion
4	J315 6063	1			CONE, Bearing
5	J315 6062	1			CUP, Bearing
6	J317 5779	1			SPACER, Pinion
7	8350 3003	1			SHIM PACKAGE (8), Pinion ***
8	J315 6065	1			CUP, Bearing
9	J317 0947	1			CONE, Bearing
10					GEAR SET, Rear Axle Ring and Pinion
	J448 7814	1			3.31 Ratio
	J813 0782	1			3.54 Ratio
	8350 3197	1			3.55 Ratio
	8350 0257	1			3.73 Ratio
	8350 2486	1			4.11 Ratio
	8350 3432	1			4.56 Ratio
11	J320 2890	1			BOLT PACKAGE ***
12	5300 0561	1			CASE ASSEMBLY, Differential
13	8350 0138	1			GEAR SET, Differential
14	J323 7817	2			WASHER, Side Gear
15	J323 7818	2			WASHER, Pinion Gear
16	J322 4231	1			SHAFT, Differential
17	S045 5313	1			PIN
18	8350 3004	1			SHIM PACKAGE (16), Case ***
19	J315 6052	2			CONE, Bearing
20	J317 1166	2			CUP, Bearing

MODEL CODES

16=Cherokee 2 Dr.(1981-83)
17=Cherokee 2 Dr.(1981-83)
73=Cherokee 2WD-2 Dr.(1984-86)
74=Cherokee 2WD-4 Dr.(1984-86)
18=Cherokee 4 Dr.(1981-83)
77=Cherokee 4WD-2 Dr.(1984-86)
78=Cherokee 4WD-4 Dr.(1984-86)
85=CJ-5 (1981-83)
86=CJ-6(1981)
87=CJ-7(1981-86)
88=CJ-8, Scrambler(1981-86)
64=Comanche 2WD-6 Ft. Box(1986)
66=Comanche 2WD-7 Ft. Box(1986)
63=Comanche 4WD-6 Ft. Box(1986)
65=Comanche 4WD-7 Ft. Box(1986)
15=Grand Wagoneer 4 Dr.(1984-86)
25=J-10 Truck 7 Ft. Box(1981-84)
26=J10 Truck 8 Ft. Box(1981-86)
27=J-20 Truck 8 Ft. Box(1981-86)
15=Wagoneer 4 Dr.(1981-83)
75=Wagoneer 4WD-4 Dr.(1984-86)

BODY
CJ=CJ-5, CJ-6, CJ-7, CJ-8, Scrambler(1981-86)
MJ=Comanche Pickup(1986)

STYLES
SJ=Wagoneer(1981-83), Grand Wagoneer(1984-86), Cherokee(1981-83), J-10, J-20(1981-86)
XJ=Wagoneer(1984-86), Cherokee(1984-86)

AR = Use as Required - = Non Illustrated Part P.A.R. = Paint as Required

« RETURN TO GROUP INDEX

DIFFERRENTIAL AND GEARS, REAR AXLE AMC OR DANA MODEL 35, LOCKING XJ CHEROKEE, XJ WAGONEER, COMANCHE
Figure 3-1300

81J03 1300

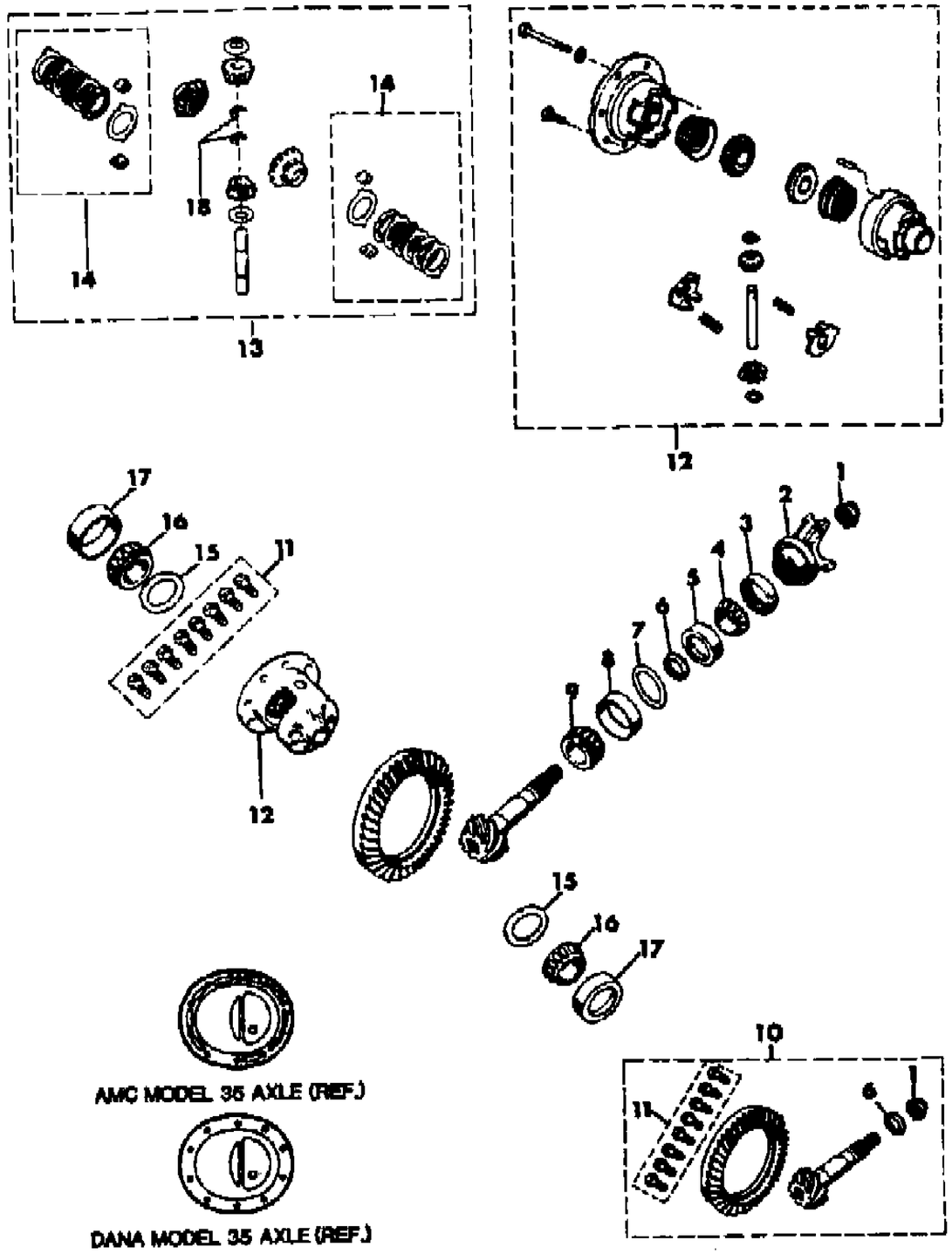

ITEM	PART NUMBER	QTY	BODY	MODEL	DESCRIPTION
1	J318 2601	1			NUT, Pinion
2	8350 3318	1			YOKE, Pinion
3	5300 2642	1			SEAL, Pinion
4	J315 6063	1			CONE, Bearing
5	J315 6062	1			CUP, Bearing
6	J317 5779	1			SPACER, Pinion
7	8350 3003	1			SHIM PACKAGE (8), Pinion ***
8	J315 6065	1			CUP, Bearing
9	J317 0947	1			CONE, Bearing
10					GEAR SET, Rear Axle Ring and Pinion
	J448 7814	1			3.31 Ratio
	8350 3197	1			3.55 Ratio
	8350 0257	1			3.73 Ratio
	8350 2486	1			4.11 Ratio
11	J320 2890	1			BOLT PACKAGE ***
12	5300 0986	1			CASE ASSEMBLY, Differential
13	8350 0262	1			GEAR SET, Differential
14	8350 0263	1			DISC PACKAGE, Differential ***
15	8350 3004	1			SHIM PACKAGE (16), Case ***
16	J315 6052	2			CONE, Bearing
17	J317 1166	2			CUP, Bearing
18	8350 1445	2			RING, Snap

MODEL CODES

16=Cherokee 2 Dr.(1981-83)
17=Cherokee 2 Dr.(1981-83)
73=Cherokee 2WD-2 Dr.(1984-86)
74=Cherokee 2WD-4 Dr.(1984-86)
18=Cherokee 4 Dr.(1981-83)
77=Cherokee 4WD-2 Dr.(1984-86)
78=Cherokee 4WD-4 Dr.(1984-86)
85=CJ-5 (1981-83)
86=CJ-6(1981)
87=CJ-7(1981-86)
88=CJ-8, Scrambler(1981-86)
64=Comanche 2WD-6 Ft. Box(1986)
66=Comanche 2WD-7 Ft. Box(1986)
63=Comanche 4WD-6 Ft. Box(1986)
65=Comanche 4WD-7 Ft. Box(1986)
15=Grand Wagoneer 4 Dr.(1984-86)
25=J-10 Truck 7 Ft. Box(1981-84)
26=J10 Truck 8 Ft. Box(1981-86)
27=J-20 Truck 8 Ft. Box(1981-86)
15=Wagoneer 4 Dr.(1981-83)
75=Wagoneer 4WD-4 Dr.(1984-86)

BODY
CJ=CJ-5, CJ-6, CJ-7, CJ-8, Scrambler(1981-86)
MJ=Comanche Pickup(1986)

STYLES
SJ=Wagoneer(1981-83), Grand Wagoneer(1984-86), Cherokee(1981-83), J-10, J-20(1981-86)
XJ=Wagoneer(1984-86), Cherokee(1984-86)

AR = Use as Required - = Non Illustrated Part P.A.R. = Paint as Required

« RETURN TO GROUP INDEX

SHAFT, REAT AXLE AMC OR DANA MODEL 35 XJ CHEROKEE, XJ WAGONEER, COMANCHE
Figure 3-1400

81J03 1400

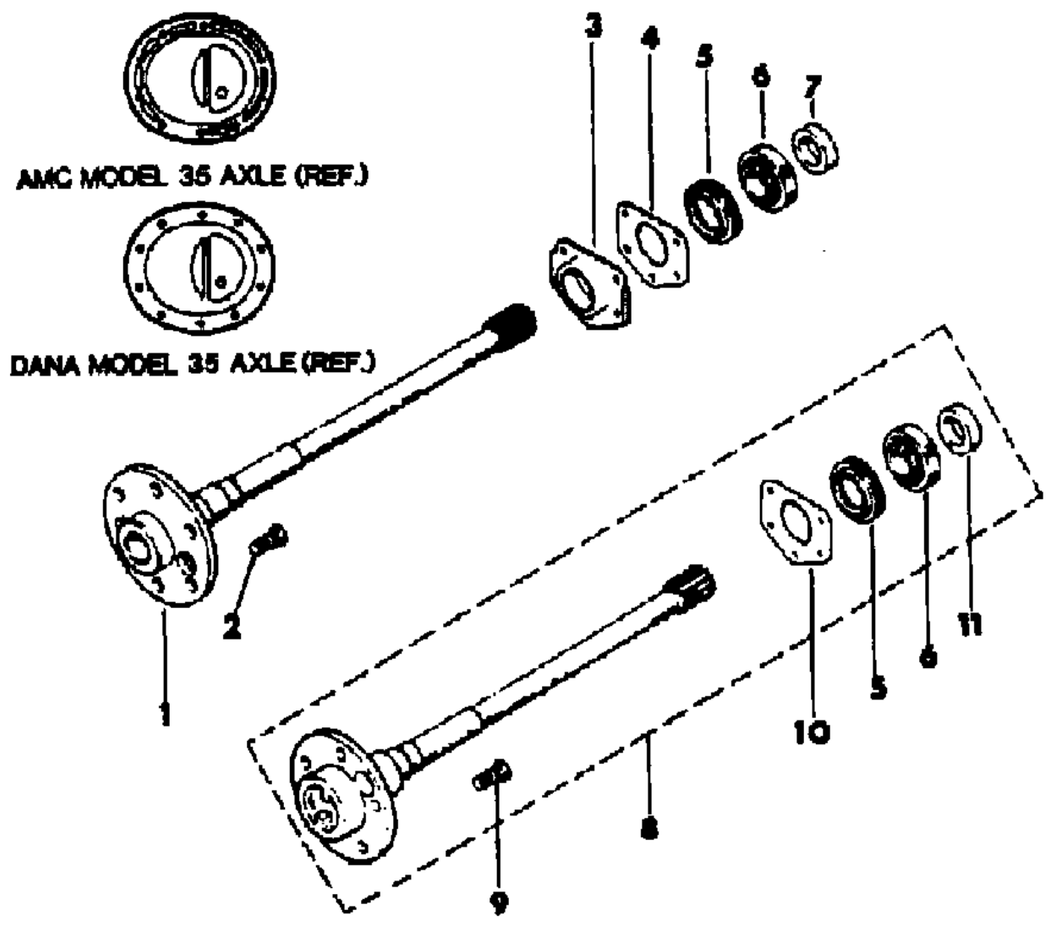

ITEM	PART NUMBER	QTY	BODY	MODEL	DESCRIPTION
1					SHAFT, Axle
					Right
	5300 0404	1	XJ		1984-85
	5300 0404	1	XJ		1986: Stamped T,E,K,KK or Tagged 8953004215, 8953004216, 8953004217, 8953004218, 8953004512, 8953004513, 8953004514 or 8953004515
	5300 0404	1	MJ		Stamped T,E,K,KK or Tagged 8953004219, 8953004220, 8953004221, 8953004222, 8953004516, 8953004517, 8953004518 or 8953004519
					Left
	5300 0403	1	XJ		1984-85
	5300 0403	1	XJ		1986: Stamped T,E,K,KK or Tagged 8953004215, 8953004216, 8953004217, 8953004218, 8953004512, 8953004513, 8953004514 or 8953004515
	5300 0403	1	MJ		Stamped T,E,K,KK or Tagged 8953004219, 8953004220, 8953004221, 8953004222, 8953004516, 8953004517, 8953004518 or 8953004519
2	J322 0275	10			STUD, Wheel
3	5300 0460	2			PLATE, Guide
4					RETAINER, Seal
	5300 0459	2	XJ		1984-85
	5300 0459	2	XJ		1986: Stamped T,E,K,KK or Tagged 8953004215, 8953004216, 8953004217 or 8953004218
	5300 0459	2	MJ		Stamped T,E,K,KK or Tagged 8953004219, 8953004220, 8953004221 or 8953004222
	8350 3022	2	XJ		Tagged 8953004512, 8953004513, 8953004514, 8953004515, 8953004043, 8953003692 or 8953003693
	8350 3022	2	MJ		Tagged 8953004516, 8953004517, 8953004518 or 8953004519
5	5300 0477	2			SEAL
6	5300 0475	2			BEARING
7					RING, Retaining
	5300 2527	2	XJ		1984-85
	5300 2527	2	XJ		1986: Stamped T,E,K,KK or Tagged 8953004215, 8953004216, 8953004217, 8953004218, 8953004512, 8953004513, 8953004514 or 8953004515
	5300 2527	2	MJ		Stamped T,E,K,KK or Tagged 8953004219, 8953004220, 8953004221, 8953004222, 8953004516, 8953004517, 8953004518 or 8953004519
8					SHAFT, Axle

MODEL CODES

16=Cherokee 2 Dr.(1981-83)	78=Cherokee 4WD-4 Dr.(1984-86)	64=Comanche 2WD-6 Ft. Box(1986)	25=J-10 Truck 7 Ft. Box(1981-84)
17=Cherokee 2 Dr.(1981-83)	85=CJ-5 (1981-83)	66=Comanche 2WD-7 Ft. Box(1986)	26=J10 Truck 8 Ft. Box(1981-86)
73=Cherokee 2WD-2 Dr.(1984-86)	86=CJ-6(1981)	63=Comanche 4WD-6 Ft. Box(1986)	27=J-20 Truck 8 Ft. Box(1981-86)
74=Cherokee 2WD-4 Dr.(1984-86)	87=CJ-7(1981-86)	65=Comanche 4WD-7 Ft. Box(1986)	15=Wagoneer 4 Dr.(1981-83)
18=Cherokee 4 Dr.(1981-83)	88=CJ-8, Scrambler(1981-86)	15=Grand Wagoneer 4 Dr.(1984-86)	75=Wagoneer 4WD-4 Dr.(1984-86)
77=Cherokee 4WD-2 Dr.(1984-86)			

BODY
CJ=CJ-5, CJ-6, CJ-7, CJ-8, Scrambler(1981-86)
MJ=Comanche Pickup(1986)

STYLES
SJ=Wagoneer(1981-83), Grand Wagoneer(1984-86), Cherokee(1981-83), J-10, J-20(1981-86)
XJ=Wagoneer(1984-86), Cherokee(1984-86)

AR = Use as Required - = Non Illustrated Part P.A.R. = Paint as Required

SHAFT, REAT AXLE AMC OR DANA MODEL 35 XJ CHEROKEE, XJ WAGONEER, COMANCHE
Figure 3-1400

81J03 1400

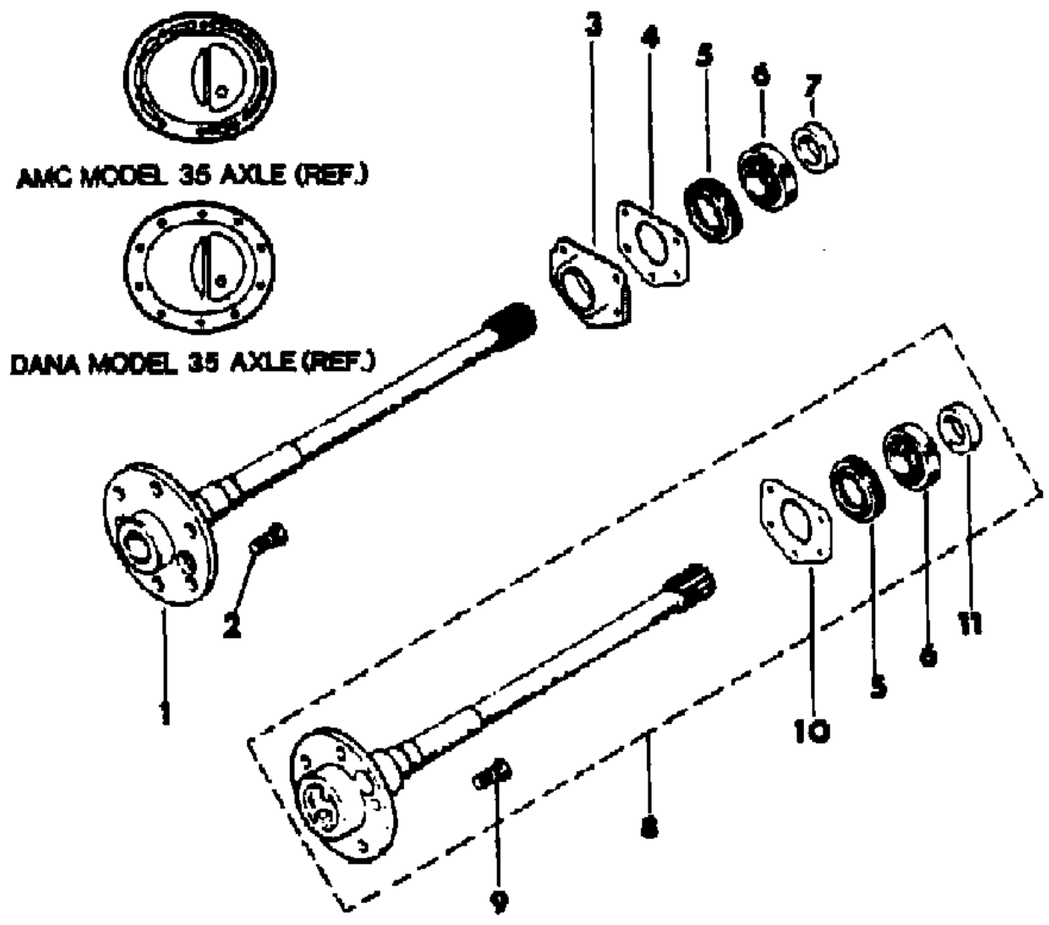

ITEM	PART NUMBER	QTY	BODY	MODEL	DESCRIPTION
					Right
	8350 2882	1	XJ		1986: Tagged 8953004043, 8953003692 or 8953003693
	8350 2882	1	MJ		Tagged 8953004045, 8953003697, 8953003698, 8953003699 or 8953004768
					Left
	8350 2883	1	XJ		1986: Tagged 8953004043, 8953003692 or 8953003693
	8350 2883	1	MJ		Tagged 8953004045, 8953003697, 8953003698, 8953003699 or 8953004768
9	8350 3053	10			STUD, Wheel
10					RETAINER, Seal
	8350 3022	2	XJ		1986: Tagged 8953004043, 8953003692 or 8953003693
	8350 3022	2	MJ		Tagged 8953004045, 8953003697, 8953003698, 8953003699 or 8953004768
11					RING, Retaining
	8350 3054	2	XJ		1986: Tagged 8953004043, 8953003692 or 8953003693
	8350 3054	2	MJ		Tagged 8953004045, 8953003697, 8953003698, 8953003699 or 8953004768

MODEL CODES

16=Cherokee 2 Dr.(1981-83)
17=Cherokee 2 Dr.(1981-83)
73=Cherokee 2WD-2 Dr.(1984-86)
74=Cherokee 2WD-4 Dr.(1984-86)
18=Cherokee 4 Dr.(1981-83)
77=Cherokee 4WD-2 Dr.(1984-86)
78=Cherokee 4WD-4 Dr.(1984-86)
85=CJ-5 (1981-83)
86=CJ-6(1981)
87=CJ-7(1981-86)
88=CJ-8, Scrambler(1981-86)
64=Comanche 2WD-6 Ft. Box(1986)
66=Comanche 2WD-7 Ft. Box(1986)
63=Comanche 4WD-6 Ft. Box(1986)
65=Comanche 4WD-7 Ft. Box(1986)
15=Grand Wagoneer 4 Dr.(1984-86)
25=J-10 Truck 7 Ft. Box(1981-84)
26=J10 Truck 8 Ft. Box(1981-86)
27=J-20 Truck 8 Ft. Box(1981-86)
15=Wagoneer 4 Dr.(1981-83)
75=Wagoneer 4WD-4 Dr.(1984-86)

BODY
CJ=CJ-5, CJ-6, CJ-7, CJ-8, Scrambler(1981-86)
MJ=Comanche Pickup(1986)

STYLES
SJ=Wagoneer(1981-83), Grand Wagoneer(1984-86), Cherokee(1981-83), J-10, J-20(1981-86)
XJ=Wagoneer(1984-86), Cherokee(1984-86)

AR = Use as Required - = Non Illustrated Part P.A.R. = Paint as Required

AXLE ASSEMBLY, REAR AMC LARGE AXLE COMANCHE
Figure 3-1500

81J03 1500D

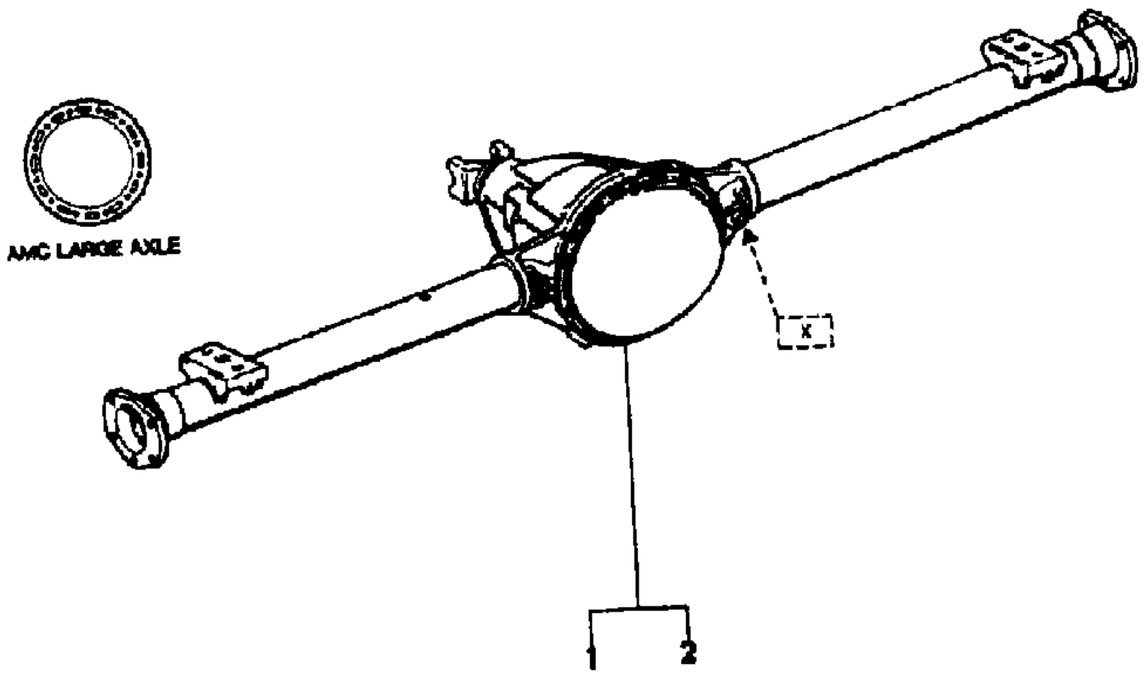

ITEM	PART NUMBER	QTY	BODY	MODEL	DESCRIPTION
1					AXLE ASSEMBLY, Without Locking Differential ***
	5300 1536	1			1986: 4.10 Ratio, Stamped C
2					AXLE ASSEMBLY, With Locking Differential ***
	5300 1539	1			1986: 4.10 Ratio, Stamped CC

MODEL CODES

16=Cherokee 2 Dr.(1981-83)	78=Cherokee 4WD-4 Dr.(1984-86)	64=Comanche 2WD-6 Ft. Box(1986)	25=J-10 Truck 7 Ft. Box(1981-84)
17=Cherokee 2 Dr.(1981-83)	85=CJ-5 (1981-83)	66=Comanche 2WD-7 Ft. Box(1986)	26=J10 Truck 8 Ft. Box(1981-86)
73=Cherokee 2WD-2 Dr.(1984-86)	86=CJ-6(1981)	63=Comanche 4WD-6 Ft. Box(1986)	27=J-20 Truck 8 Ft. Box(1981-86)
74=Cherokee 2WD-4 Dr.(1984-86)	87=CJ-7(1981-86)	65=Comanche 4WD-7 Ft. Box(1986)	15=Wagoneer 4 Dr.(1981-83)
18=Cherokee 4 Dr.(1981-83)	88=CJ-8, Scrambler(1981-86)	15=Grand Wagoneer 4 Dr.(1984-86)	75=Wagoneer 4WD-4 Dr.(1984-86)
77=Cherokee 4WD-2 Dr.(1984-86)			

BODY
CJ=CJ-5, CJ-6, CJ-7, CJ-8, Scrambler(1981-86)
MJ=Comanche Pickup(1986)

STYLES
SJ=Wagoneer(1981-83), Grand Wagoneer(1984-86), Cherokee(1981-83), J-10, J-20(1981-86)
XJ=Wagoneer(1984-86), Cherokee(1984-86)

AR = Use as Required - = Non Illustrated Part P.A.R. = Paint as Required

« RETURN TO GROUP INDEX

AXLE ASSEMBLY, REAR AMC LARGE AXLE COMANCHE
Figure 3-1500

81J03 1600

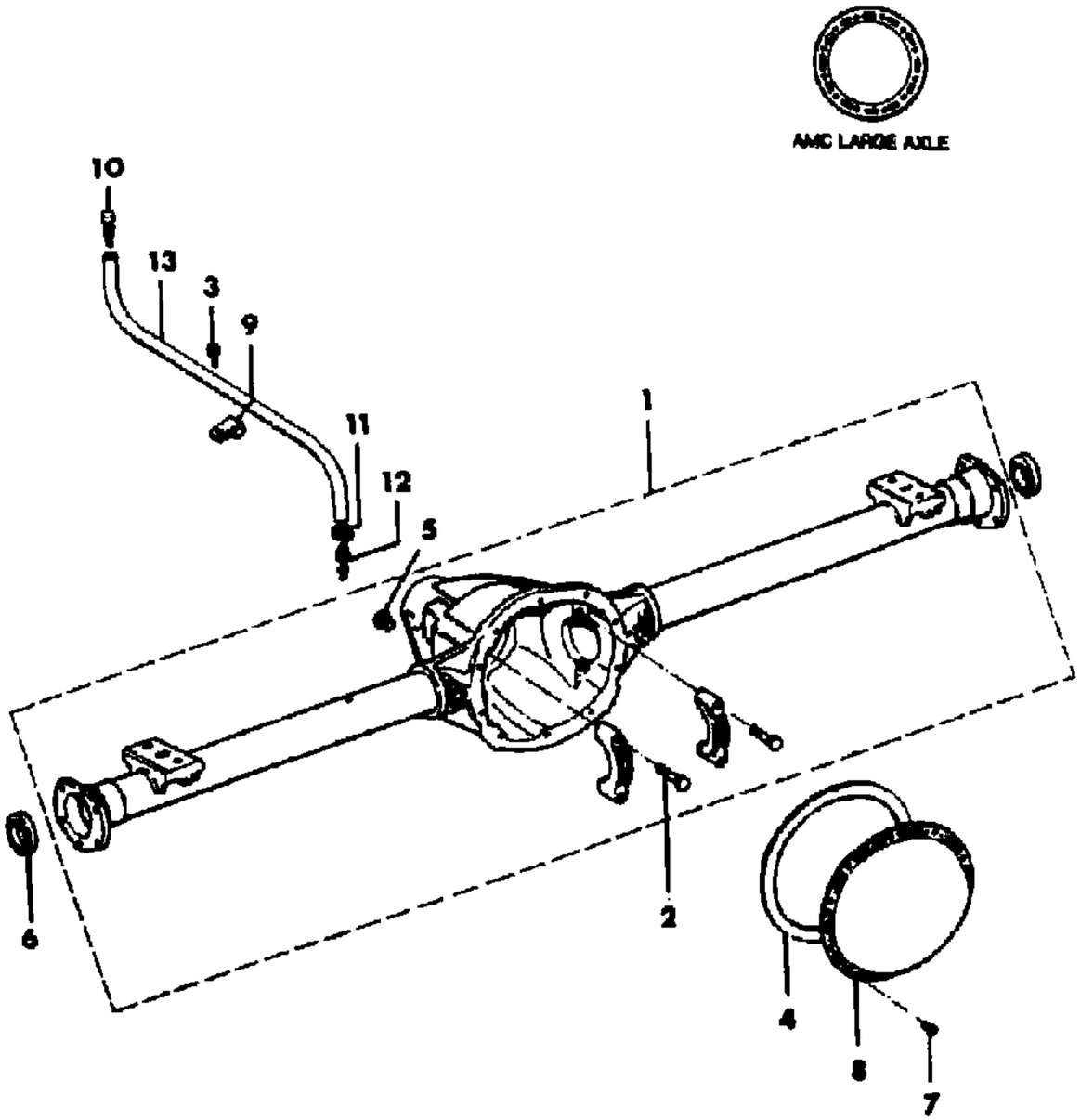

ITEM	PART NUMBER	QTY	BODY	MODEL	DESCRIPTION
1	8320 2504	1			HOUSING, Axle
2	J400 6554	4			BOLT
3	J942 6241	1			SCREW
4	J317 2122	1			GASKET
5	J400 4751	1			PLUG
6	J323 5929	1			SEAL
7	J400 6708	12			BOLT
8	J321 5943	1			COVER
9	J012 0526	1			CLIP
10	J535 2955	1			BREATHER
11	J322 7851	1			CLAMP
12	J318 7999	1			VENT
13	J318 7627	1			HOSE

MODEL CODES

16=Cherokee 2 Dr.(1981-83)	78=Cherokee 4WD-4 Dr.(1984-86)	64=Comanche 2WD-6 Ft. Box(1986)	25=J-10 Truck 7 Ft. Box(1981-84)
17=Cherokee 2 Dr.(1981-83)	85=CJ-5 (1981-83)	66=Comanche 2WD-7 Ft. Box(1986)	26=J10 Truck 8 Ft. Box(1981-86)
73=Cherokee 2WD-2 Dr.(1984-86)	86=CJ-6(1981)	63=Comanche 4WD-6 Ft. Box(1986)	27=J-20 Truck 8 Ft. Box(1981-86)
74=Cherokee 2WD-4 Dr.(1984-86)	87=CJ-7(1981-86)	65=Comanche 4WD-7 Ft. Box(1986)	15=Wagoneer 4 Dr.(1981-83)
18=Cherokee 4 Dr.(1981-83)	88=CJ-8, Scrambler(1981-86)	15=Grand Wagoneer 4 Dr.(1984-86)	75=Wagoneer 4WD-4 Dr.(1984-86)
77=Cherokee 4WD-2 Dr.(1984-86)			

BODY
CJ=CJ-5, CJ-6, CJ-7, CJ-8, Scrambler(1981-86)
MJ=Comanche Pickup(1986)

STYLES
SJ=Wagoneer(1981-83), Grand Wagoneer(1984-86), Cherokee(1981-83), J-10, J-20(1981-86)
XJ=Wagoneer(1984-86), Cherokee(1984-86)

AR = Use as Required - = Non Illustrated Part P.A.R. = Paint as Required

« RETURN TO GROUP INDEX

DIFFERENTIAL AND GEARS, REAR AXLE AMC LARGE AXLE, NON-LOCKING COMANCHE
Figure 3-1700

81J03 1700

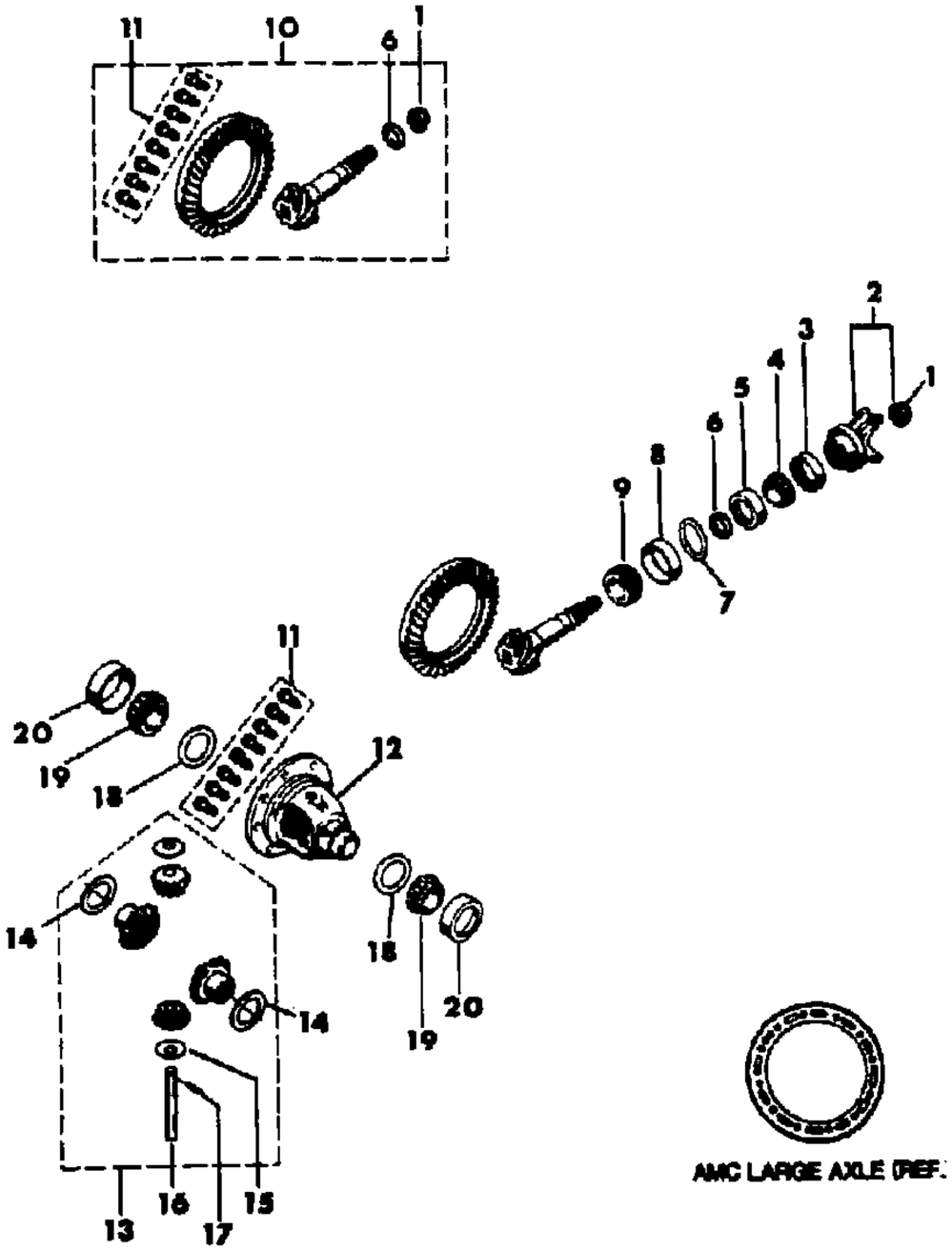

ITEM	PART NUMBER	QTY	BODY	MODEL	DESCRIPTION
1	J318 2601	1			NUT, Pinion
2	8350 2058	1			YOKE, Pinion
3	5300 2642	1			SEAL, Pinion
4	J317 2135	1			CONE, Bearing
5	J317 2134	1			CUP, Bearing
6	J317 5971	1			SPACER, Pinion
7	J320 5567	1			SHIM PACKAGE (18), Pinion ***
8	J317 2564	1			CUP, Bearing
9	J317 2563	1			CONE, Bearing
10	J812 7072	1			GEAR SET, Rear Axle Ring and Pinion
11	J448 6828	1			BOLT PACKAGE ***
12	J323 5502	1			CASE ASSEMBLY, Differential
13	J812 7092	1			GEAR SET, Differential
14	J322 0250	2			WASHER, Side Gear
15	J322 2999	2			WASHER, Pinion Gear
16	J321 8195	1			SHAFT, Differential
17	S045 5313	1			PIN
18	J320 5532	1			SHIM PACKAGE (18), Case ***
19	J317 2565	2			CONE, Bearing
20	J317 2566	2			CUP, Bearing

MODEL CODES

16=Cherokee 2 Dr.(1981-83)
17=Cherokee 2 Dr.(1981-83)
73=Cherokee 2WD-2 Dr.(1984-86)
74=Cherokee 2WD-4 Dr.(1984-86)
18=Cherokee 4 Dr.(1981-83)
77=Cherokee 4WD-2 Dr.(1984-86)
78=Cherokee 4WD-4 Dr.(1984-86)
85=CJ-5 (1981-83)
86=CJ-6(1981)
87=CJ-7(1981-86)
88=CJ-8, Scrambler(1981-86)
64=Comanche 2WD-6 Ft. Box(1986)
66=Comanche 2WD-7 Ft. Box(1986)
63=Comanche 4WD-6 Ft. Box(1986)
65=Comanche 4WD-7 Ft. Box(1986)
15=Grand Wagoneer 4 Dr.(1984-86)
25=J-10 Truck 7 Ft. Box(1981-84)
26=J10 Truck 8 Ft. Box(1981-86)
27=J-20 Truck 8 Ft. Box(1981-86)
15=Wagoneer 4 Dr.(1981-83)
75=Wagoneer 4WD-4 Dr.(1984-86)

BODY
CJ=CJ-5, CJ-6, CJ-7, CJ-8, Scrambler(1981-86)
MJ=Comanche Pickup(1986)

STYLES
SJ=Wagoneer(1981-83), Grand Wagoneer(1984-86), Cherokee(1981-83), J-10, J-20(1981-86)
XJ=Wagoneer(1984-86), Cherokee(1984-86)

AR = Use as Required - = Non Illustrated Part P.A.R. = Paint as Required

« RETURN TO GROUP INDEX

DIFFERENTIAL AND GEARS, REAR AXLE AMC LARGE AXLE, LOCKING COMANCHE
Figure 3-1800

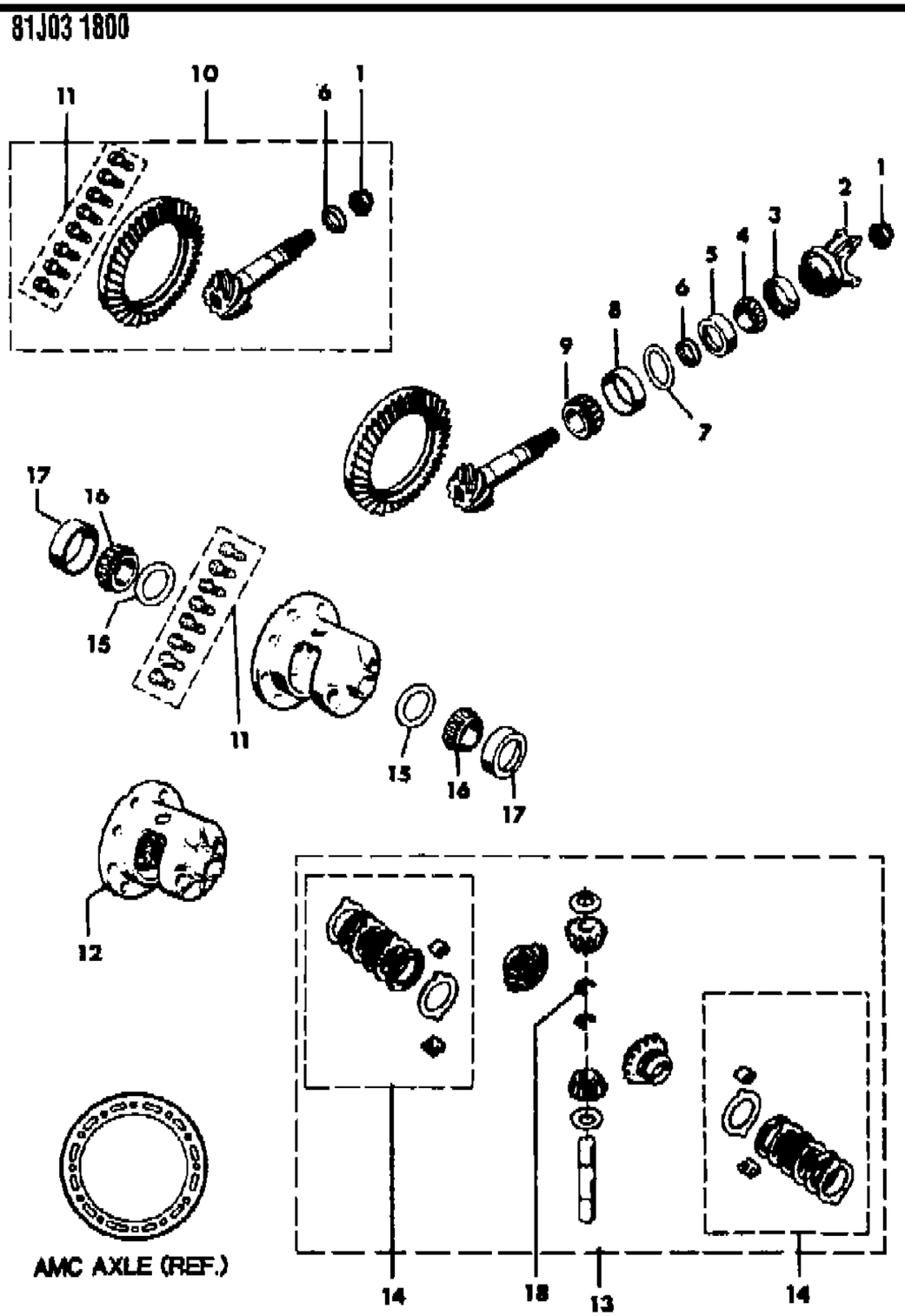

ITEM	PART NUMBER	QTY	BODY	MODEL	DESCRIPTION
1	J318 2601	1			NUT, Pinion
2	8350 2058	1			YOKE, Pinion
3	5300 2642	1			SEAL, Pinion
4	J317 2135	1			CONE, Bearing
5	J317 2134	1			CUP, Bearing
6	J318 5971	1			SPACER, Pinion
7	J320 5567	1			SHIM PACKAGE (18), Pinion ***
8	J317 2564	1			CUP, Bearing
9	J317 2563	1			CONE, Bearing
10	J812 7072	1			GEAR SET, Rear Axle Ring and Pinion
11	J448 6828	1			BOLT PACKAGE ***
12	J323 0153	1			CASE ASSEMBLY, Differential
13	J812 0326	1			GEAR SET, Differential
14	J812 0325	1			DISC PACKAGE, Differential ***
15	J320 5532	1			SHIM PACKAGE (18), Case ***
16	J317 2565	2			CONE, Bearing
17	J317 2566	2			CUP, Bearing
18	J812 1787	2			RING, Snap

MODEL CODES
16=Cherokee 2 Dr.(1981-83)
17=Cherokee 2 Dr.(1981-83)
73=Cherokee 2WD-2 Dr.(1984-86)
74=Cherokee 2WD-4 Dr.(1984-86)
18=Cherokee 4 Dr.(1981-83)
77=Cherokee 4WD-2 Dr.(1984-86)
78=Cherokee 4WD-4 Dr.(1984-86)
85=CJ-5 (1981-83)
86=CJ-6(1981)
87=CJ-7(1981-86)
88=CJ-8, Scrambler(1981-86)
64=Comanche 2WD-6 Ft. Box(1986)
66=Comanche 2WD-7 Ft. Box(1986)
63=Comanche 4WD-6 Ft. Box(1986)
65=Comanche 4WD-7 Ft. Box(1986)
15=Grand Wagoneer 4 Dr.(1984-86)
25=J-10 Truck 7 Ft. Box(1981-84)
26=J10 Truck 8 Ft. Box(1981-86)
27=J-20 Truck 8 Ft. Box(1981-86)
15=Wagoneer 4 Dr.(1981-83)
75=Wagoneer 4WD-4 Dr.(1984-86)

BODY
CJ=CJ-5, CJ-6, CJ-7, CJ-8, Scrambler(1981-86)
MJ=Comanche Pickup(1986)

STYLES
SJ=Wagoneer(1981-83), Grand Wagoneer(1984-86), Cherokee(1981-83), J-10, J-20(1981-86)
XJ=Wagoneer(1984-86), Cherokee(1984-86)

AR = Use as Required - = Non Illustrated Part P.A.R. = Paint as Required

« RETURN TO GROUP INDEX

SHAFT, REAR AXLE AMC LARGE AXLE COMANCHE
Figure 3-1900

81J03 1900

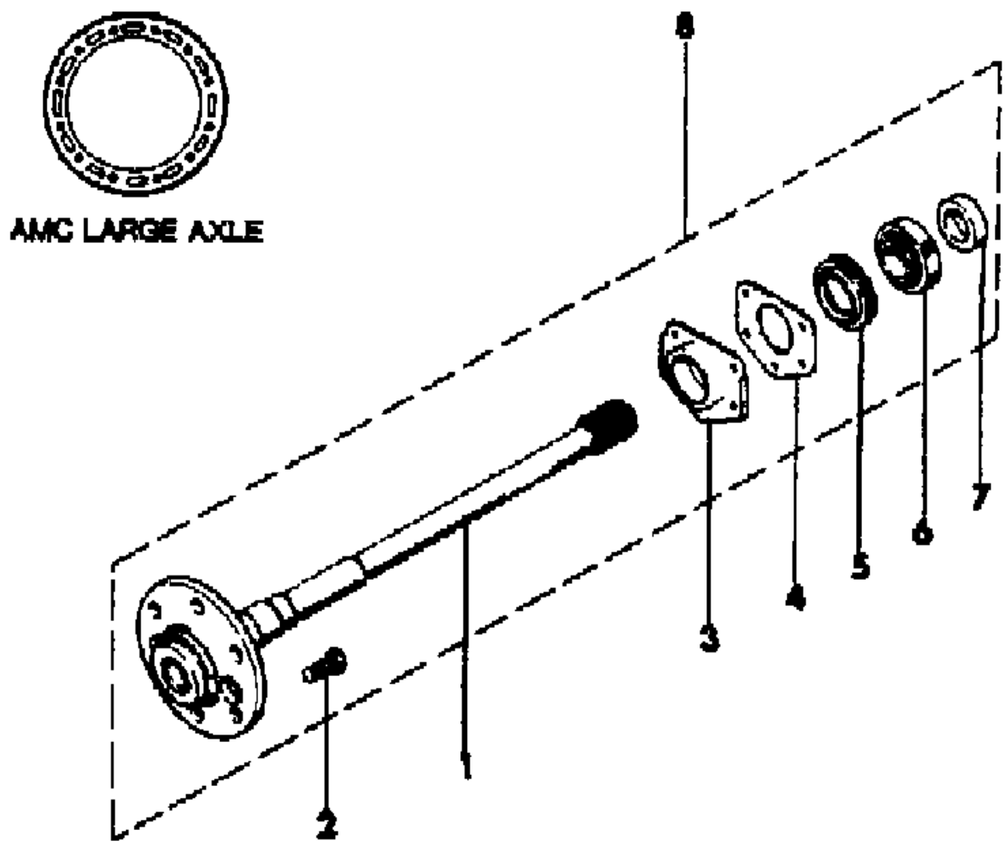

ITEM	PART NUMBER	QTY	BODY	MODEL	DESCRIPTION
1	5300 1262	2			SHAFT, Axle
2	J322 0275	10			STUD
3	5300 0460	2			PLATE
4	5300 1953	2			RETAINER
5	J324 0086	2			SEAL
6	J323 0115	2			BEARING
7	J323 9074	2			RING, Retaining
8	5300 1524	2			SHAFT ASSEMBLY, Axle

MODEL CODES

16=Cherokee 2 Dr.(1981-83)
17=Cherokee 2 Dr.(1981-83)
73=Cherokee 2WD-2 Dr.(1984-86)
74=Cherokee 2WD-4 Dr.(1984-86)
18=Cherokee 4 Dr.(1981-83)
77=Cherokee 4WD-2 Dr.(1984-86)
78=Cherokee 4WD-4 Dr.(1984-86)
85=CJ-5 (1981-83)
86=CJ-6(1981)
87=CJ-7(1981-86)
88=CJ-8, Scrambler(1981-86)
64=Comanche 2WD-6 Ft. Box(1986)
66=Comanche 2WD-7 Ft. Box(1986)
63=Comanche 4WD-6 Ft. Box(1986)
65=Comanche 4WD-7 Ft. Box(1986)
15=Grand Wagoneer 4 Dr.(1984-86)
25=J-10 Truck 7 Ft. Box(1981-84)
26=J10 Truck 8 Ft. Box(1981-86)
27=J-20 Truck 8 Ft. Box(1981-86)
15=Wagoneer 4 Dr.(1981-83)
75=Wagoneer 4WD-4 Dr.(1984-86)

BODY
CJ=CJ-5, CJ-6, CJ-7, CJ-8, Scrambler(1981-86)
MJ=Comanche Pickup(1986)

STYLES
SJ=Wagoneer(1981-83), Grand Wagoneer(1984-86), Cherokee(1981-83), J-10, J-20(1981-86)
XJ=Wagoneer(1984-86), Cherokee(1984-86)

AR = Use as Required - = Non Illustrated Part P.A.R. = Paint as Required

« RETURN TO GROUP INDEX

AXLE ASSEMBLY, REAR DANA MODEL 44 COMANCHE
Figure 3-2000

81J03 2000

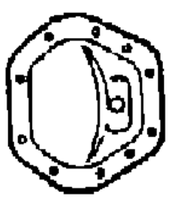

DANA MODEL 44 AXLE (REF.)

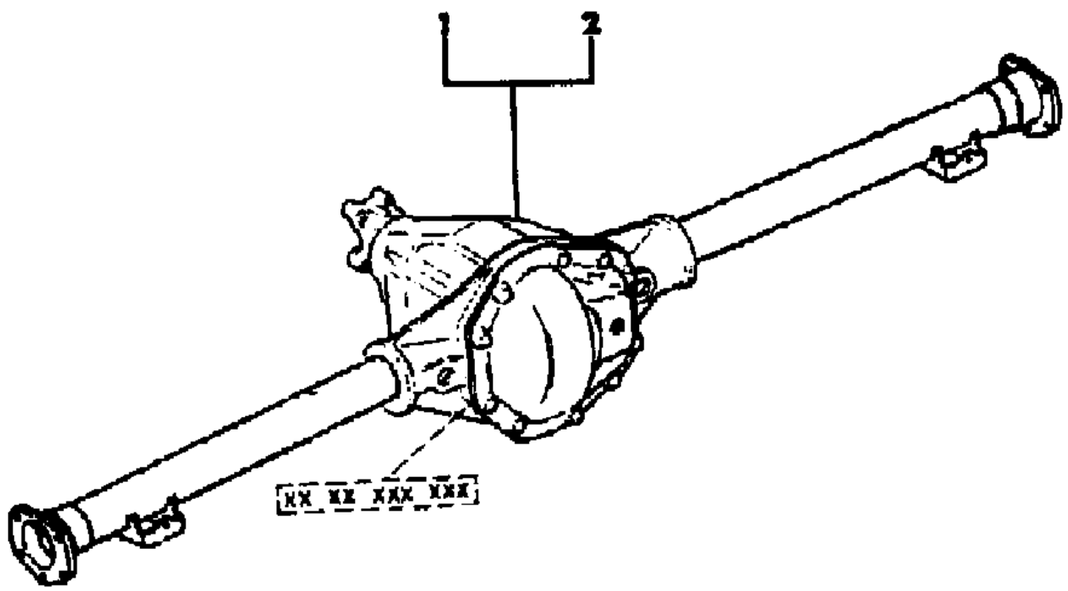

ITEM	PART NUMBER	QTY	BODY	MODEL	DESCRIPTION
1					AXLE ASSEMBLY, Without Locking Differential ***
	8350 3056	1			1986: 4.09 Ratio, Tagged 8953003701 or 8953004695
2					AXLE ASSEMBLY, With Locking Differential ***
	8350 3057	1			1986: 4.09 Ratio, Tagged 8953003700

MODEL CODES

16=Cherokee 2 Dr.(1981-83)
17=Cherokee 2 Dr.(1981-83)
73=Cherokee 2WD-2 Dr.(1984-86)
74=Cherokee 2WD-4 Dr.(1984-86)
18=Cherokee 4 Dr.(1981-83)
77=Cherokee 4WD-2 Dr.(1984-86)
78=Cherokee 4WD-4 Dr.(1984-86)
85=CJ-5 (1981-83)
86=CJ-6(1981)
87=CJ-7(1981-86)
88=CJ-8, Scrambler(1981-86)
64=Comanche 2WD-6 Ft. Box(1986)
66=Comanche 2WD-7 Ft. Box(1986)
63=Comanche 4WD-6 Ft. Box(1986)
65=Comanche 4WD-7 Ft. Box(1986)
15=Grand Wagoneer 4 Dr.(1984-86)
25=J-10 Truck 7 Ft. Box(1981-84)
26=J10 Truck 8 Ft. Box(1981-86)
27=J-20 Truck 8 Ft. Box(1981-86)
15=Wagoneer 4 Dr.(1981-83)
75=Wagoneer 4WD-4 Dr.(1984-86)

BODY

CJ=CJ-5, CJ-6, CJ-7, CJ-8, Scrambler(1981-86)
MJ=Comanche Pickup(1986)

STYLES

SJ=Wagoneer(1981-83), Grand Wagoneer(1984-86), Cherokee(1981-83), J-10, J-20(1981-86)
XJ=Wagoneer(1984-86), Cherokee(1984-86)

AR = Use as Required - = Non Illustrated Part P.A.R. = Paint as Required

« RETURN TO GROUP INDEX

AXLE HOUSING, REAR DANA MODEL 44 COMANCHE
Figure 3-2100

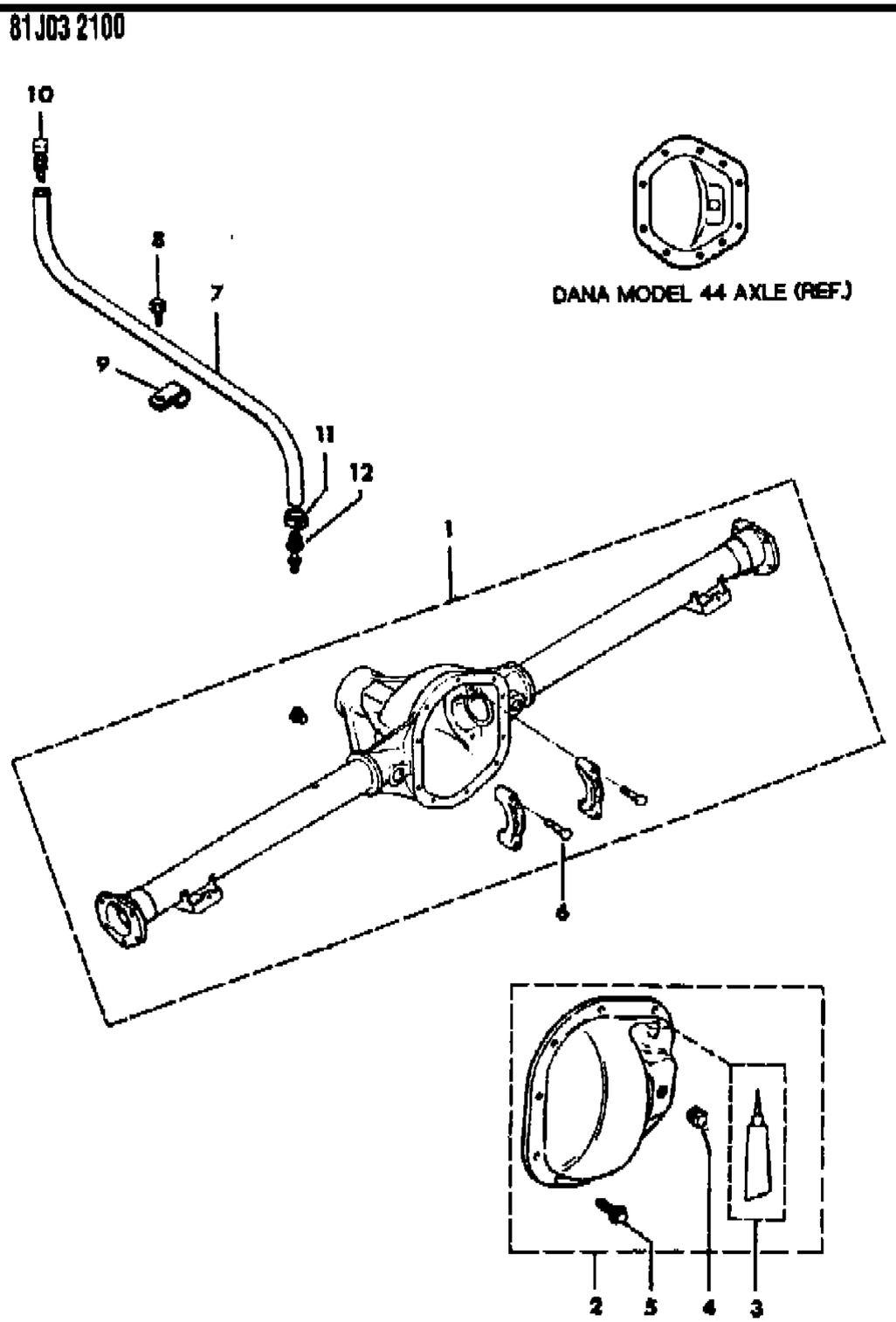

ITEM	PART NUMBER	QTY	BODY	MODEL	DESCRIPTION
1	8350 3055	1			HOUSING, Axle
2	8350 3058	1			COVER
3	J899 3317	1			SEALER
4	8350 1571	1			PLUG
5	J099 1546	10			BOLT
6	8350 1515	4			BOLT
7	J318 7627	1			HOSE, Vent
8	J942 6241	1			SCREW
9	J012 0526	1			CLIP
10	J535 2955	1			BREATHER
11	J322 7851	1			CLAMP
12	J318 7999	1			VENT

MODEL CODES

16=Cherokee 2 Dr.(1981-83)
17=Cherokee 2 Dr.(1981-83)
73=Cherokee 2WD-2 Dr.(1984-86)
74=Cherokee 2WD-4 Dr.(1984-86)
18=Cherokee 4 Dr.(1981-83)
77=Cherokee 4WD-2 Dr.(1984-86)
78=Cherokee 4WD-4 Dr.(1984-86)
85=CJ-5 (1981-83)
86=CJ-6(1981)
87=CJ-7(1981-86)
88=CJ-8, Scrambler(1981-86)
64=Comanche 2WD-6 Ft. Box(1986)
66=Comanche 2WD-7 Ft. Box(1986)
63=Comanche 4WD-6 Ft. Box(1986)
65=Comanche 4WD-7 Ft. Box(1986)
15=Grand Wagoneer 4 Dr.(1984-86)
25=J-10 Truck 7 Ft. Box(1981-84)
26=J10 Truck 8 Ft. Box(1981-86)
27=J-20 Truck 8 Ft. Box(1981-86)
15=Wagoneer 4 Dr.(1981-83)
75=Wagoneer 4WD-4 Dr.(1984-86)

BODY
CJ=CJ-5, CJ-6, CJ-7, CJ-8, Scrambler(1981-86)
MJ=Comanche Pickup(1986)

STYLES
SJ=Wagoneer(1981-83), Grand Wagoneer(1984-86), Cherokee(1981-83), J-10, J-20(1981-86)
XJ=Wagoneer(1984-86), Cherokee(1984-86)

AR = Use as Required - = Non Illustrated Part P.A.R. = Paint as Required

« RETURN TO GROUP INDEX

DIFFERENTIAL AND GEARS, REAR AXLE DANA MODEL 44, NON-LOCKING COMANCHE
Figure 3-2200

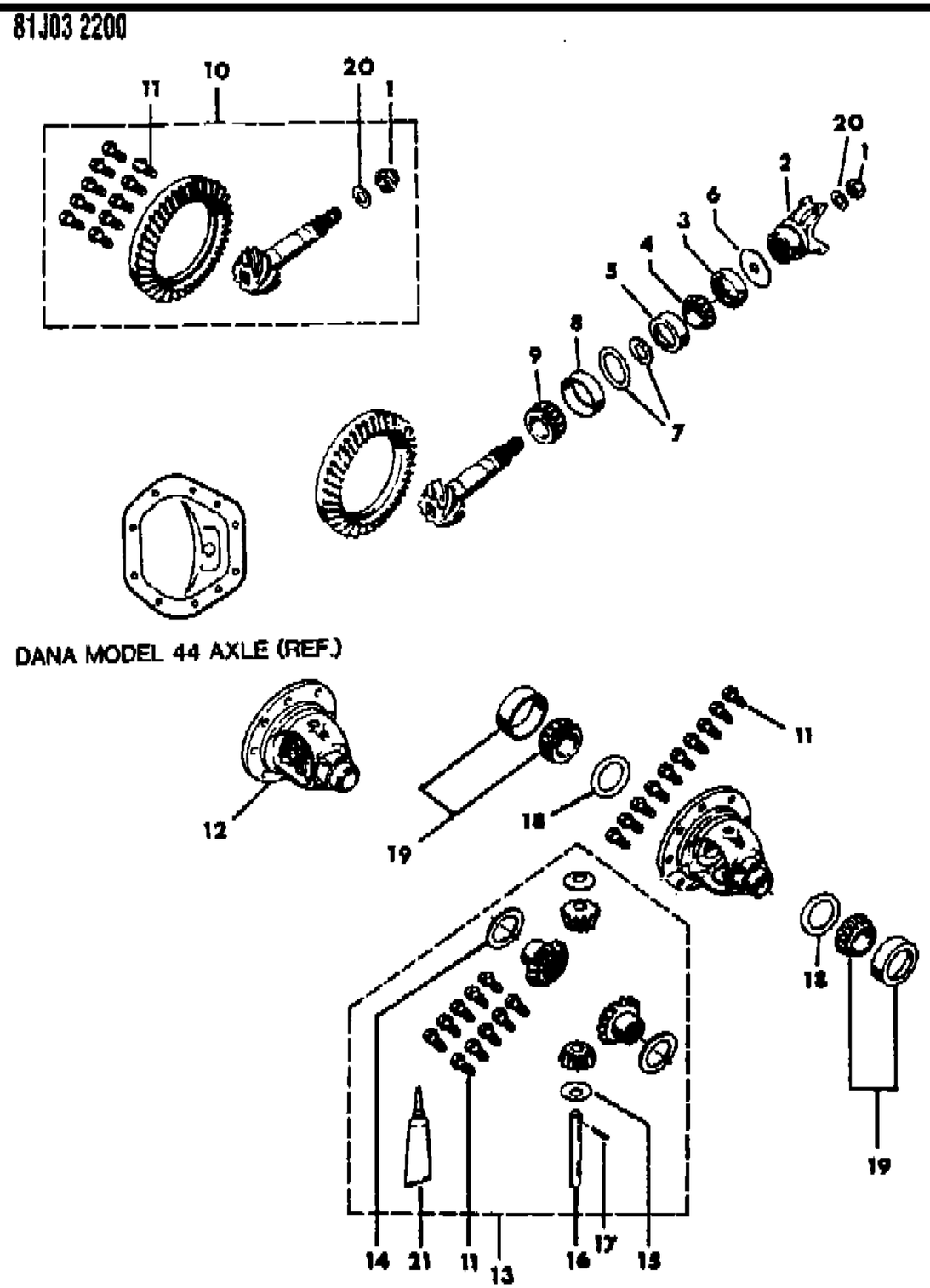

ITEM	PART NUMBER	QTY	BODY	MODEL	DESCRIPTION
1	J080 1367	1			NUT, Pinion
2					YOKE, Pinion
	J813 3241	1			With Dust Slinger on Yoke
	8350 3388	1			Without Dust Slinger on Yoke
3					SEAL, Pinion
	J099 8092	1			With Dust Slinger on Yoke
	8350 3390	1			Without Dust Slinger On Yoke
4	J005 2878	1			CONE, Bearing
5	J005 2879	1			CUP, Bearing
6	J063 6566	1			SLINGER
7	J812 9221	1			SHIM PACKAGE (15), Pinion ***
8	J005 2877	1			CUP, Bearing
9	J080 7266	1			CONE, Bearing
10	8350 3059	1			GEAR SET, Rear Axle Ring and Pinion
11	J064 9454	10			BOLT
12	8350 3067	1			CASE ASSEMBLY, Differential
13	8350 3068	1			GEAR SET, Differential
14	J080 5325	2			WASHER, Side Gear
15	J064 5790	2			WASHER, Pinion Gear
16	8350 3069	1			SHAFT, Differential
17	J063 6360	1			PIN
18	J812 9222	1			SHIM PACKAGE (8), Case ***
19	J812 4071	1			BEARING PACKAGE ***
20	J063 6570	1			WASHER
21	J899 3317	1			SEALER

MODEL CODES

16=Cherokee 2 Dr.(1981-83)	78=Cherokee 4WD-4 Dr.(1984-86)	64=Comanche 2WD-6 Ft. Box(1986)	25=J-10 Truck 7 Ft. Box(1981-84)
17=Cherokee 2 Dr.(1981-83)	85=CJ-5 (1981-83)	66=Comanche 2WD-7 Ft. Box(1986)	26=J10 Truck 8 Ft. Box(1981-86)
73=Cherokee 2WD-2 Dr.(1984-86)	86=CJ-6(1981)	63=Comanche 4WD-6 Ft. Box(1986)	27=J-20 Truck 8 Ft. Box(1981-86)
74=Cherokee 2WD-4 Dr.(1984-86)	87=CJ-7(1981-86)	65=Comanche 4WD-7 Ft. Box(1986)	15=Wagoneer 4 Dr.(1981-83)
18=Cherokee 4 Dr.(1981-83)	88=CJ-8, Scrambler(1981-86)	15=Grand Wagoneer 4 Dr.(1984-86)	75=Wagoneer 4WD-4 Dr.(1984-86)
77=Cherokee 4WD-2 Dr.(1984-86)			

BODY
CJ=CJ-5, CJ-6, CJ-7, CJ-8, Scrambler(1981-86)
MJ=Comanche Pickup(1986)

STYLES
SJ=Wagoneer(1981-83), Grand Wagoneer(1984-86), Cherokee(1981-83), J-10, J-20(1981-86)
XJ=Wagoneer(1984-86), Cherokee(1984-86)

AR = Use as Required - = Non Illustrated Part P.A.R. = Paint as Required

« RETURN TO GROUP INDEX

DIFFERENTIAL AND GEARS, REAR AXLE DANA MODEL 44, LOCKING COMANCHE
Figure 3-2300

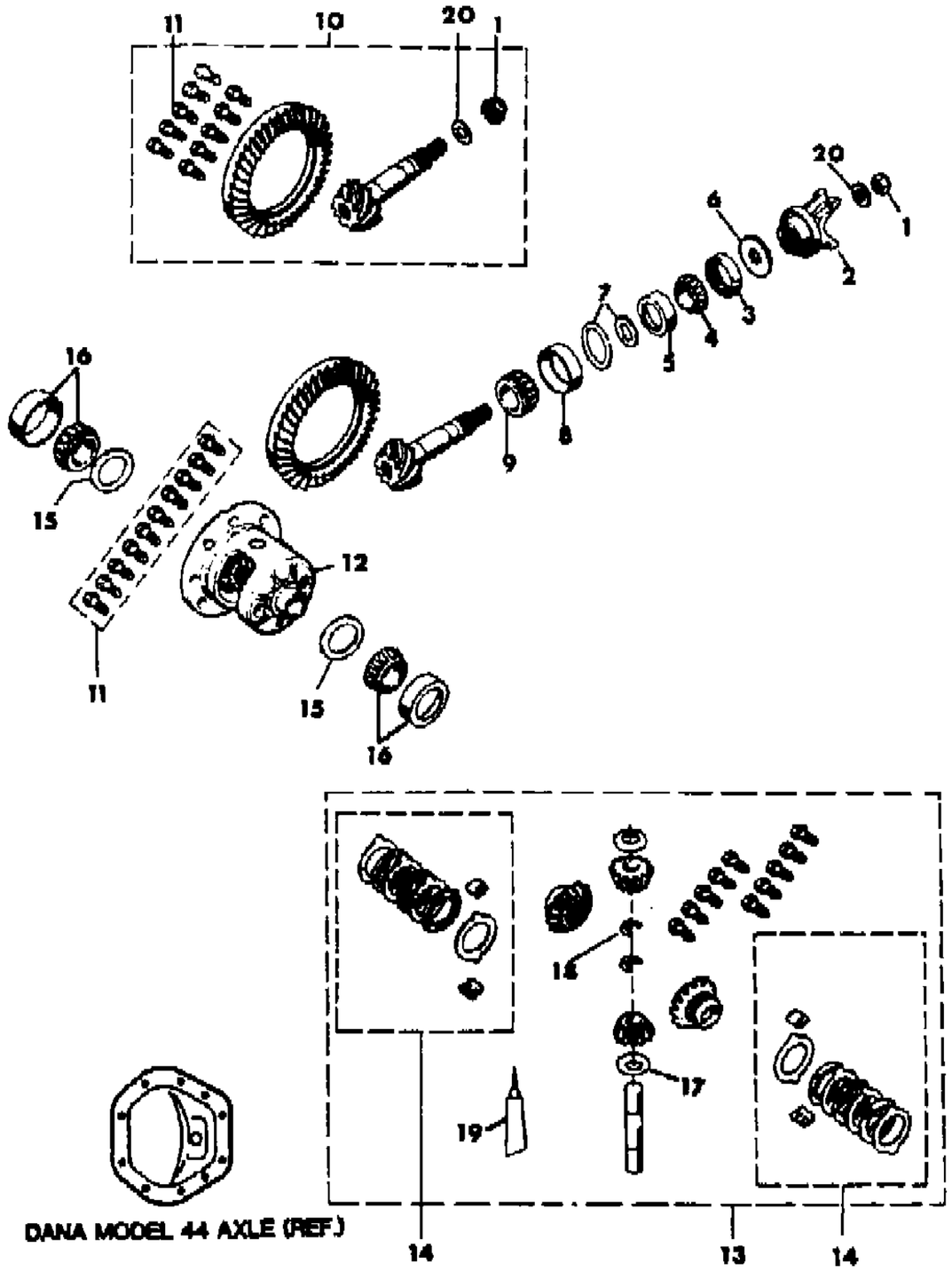

ITEM	PART NUMBER	QTY	BODY	MODEL	DESCRIPTION
1	J080 1367	1			NUT, Pinion
2	J813 3241	1			YOKE, Pinion
3	J099 8092	1			SEAL, Pinion
4	J005 2878	1			CONE, Bearing
5	J005 2879	1			CUP, Bearing
6	J063 6566	1			SLINGER
7	J812 9221	1			SHIM PACKAGE (15), Pinion ***
8	J005 2877	1			CUP, Bearing
9	J081 7266	1			CONE, Bearing
10	8350 3059	1			GEAR SET, Rear Axle Ring and Pinion
11	J064 9454	10			BOLT
12	J812 9232	1			CASE ASSEMBLY, Differential
13	J812 9220	1			GEAR SET, Differential
14	J099 4345	1			DISC PACKAGE, Differential ***
15	J812 9222	1			SHIM PACKAGE (8), Case ***
16	J812 4071	1			BEARING PACKAGE ***
17	J064 5790	2			WASHER, Pinion Gear
18	8350 3070	2			RING, Snap
19	J899 3317	1			SEALER
20	J063 6570	1			WASHER

MODEL CODES

16=Cherokee 2 Dr.(1981-83)
17=Cherokee 2 Dr.(1981-83)
73=Cherokee 2WD-2 Dr.(1984-86)
74=Cherokee 2WD-4 Dr.(1984-86)
18=Cherokee 4 Dr.(1981-83)
77=Cherokee 4WD-2 Dr.(1984-86)
78=Cherokee 4WD-4 Dr.(1984-86)
85=CJ-5 (1981-83)
86=CJ-6(1981)
87=CJ-7(1981-86)
88=CJ-8, Scrambler(1981-86)
64=Comanche 2WD-6 Ft. Box(1986)
66=Comanche 2WD-7 Ft. Box(1986)
63=Comanche 4WD-6 Ft. Box(1986)
65=Comanche 4WD-7 Ft. Box(1986)
15=Grand Wagoneer 4 Dr.(1984-86)
25=J-10 Truck 7 Ft. Box(1981-84)
26=J10 Truck 8 Ft. Box(1981-86)
27=J-20 Truck 8 Ft. Box(1981-86)
15=Wagoneer 4 Dr.(1981-83)
75=Wagoneer 4WD-4 Dr.(1984-86)

BODY
CJ=CJ-5, CJ-6, CJ-7, CJ-8, Scrambler(1981-86)
MJ=Comanche Pickup(1986)

STYLES
SJ=Wagoneer(1981-83), Grand Wagoneer(1984-86), Cherokee(1981-83), J-10, J-20(1981-86)
XJ=Wagoneer(1984-86), Cherokee(1984-86)

AR = Use as Required - = Non Illustrated Part P.A.R. = Paint as Required

« RETURN TO GROUP INDEX

SHAFTS, REAR AXLE DANA MODEL 44 COMANCHE
Figure 3-2400

81J03 2400

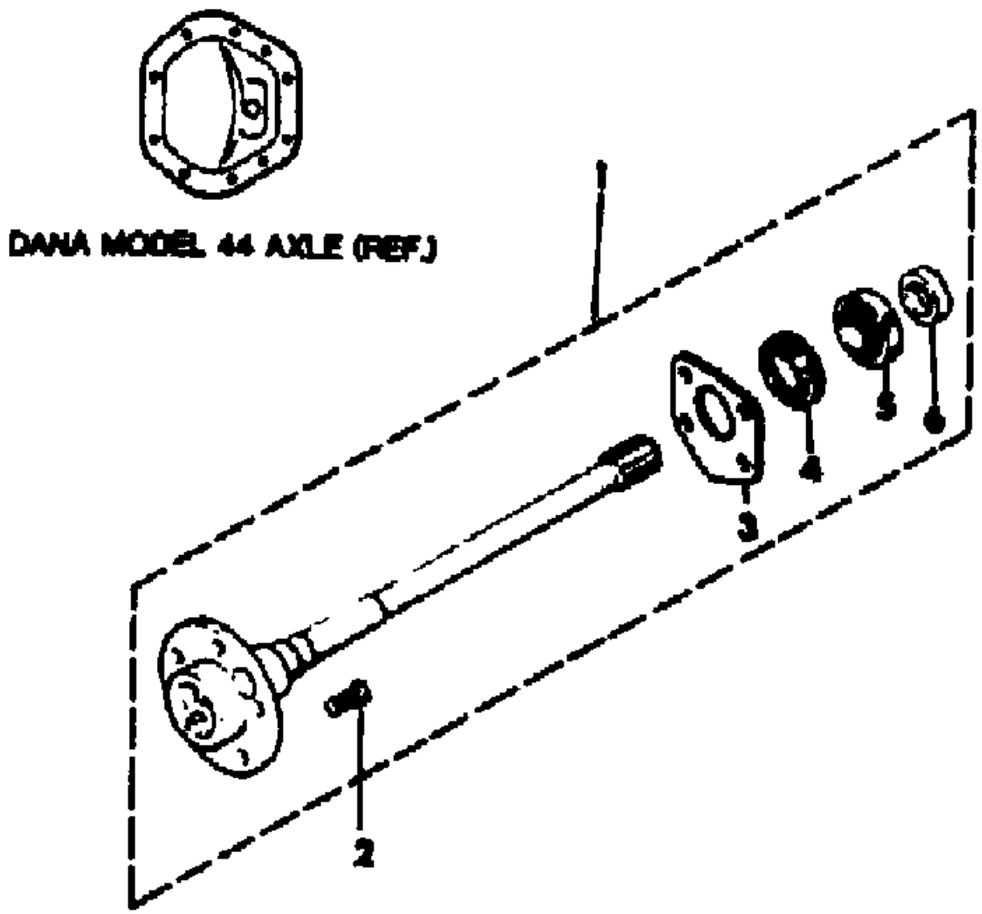

ITEM	PART NUMBER	QTY	BODY	MODEL	DESCRIPTION
1					SHAFT, Axle
	8350 3060	1			Right
	8350 3061	1			Left
2	J322 0275	10			STUD
3	8350 4190	2			RETAINER
4	8350 3063	2			SEAL
5	8350 3064	2			BEARING
6	8350 3077	2			RING, Retaining

MODEL CODES

16=Cherokee 2 Dr.(1981-83)
17=Cherokee 2 Dr.(1981-83)
73=Cherokee 2WD-2 Dr.(1984-86)
74=Cherokee 2WD-4 Dr.(1984-86)
18=Cherokee 4 Dr.(1981-83)
77=Cherokee 4WD-2 Dr.(1984-86)
78=Cherokee 4WD-4 Dr.(1984-86)
85=CJ-5 (1981-83)
86=CJ-6(1981)
87=CJ-7(1981-86)
88=CJ-8, Scrambler(1981-86)
64=Comanche 2WD-6 Ft. Box(1986)
66=Comanche 2WD-7 Ft. Box(1986)
63=Comanche 4WD-6 Ft. Box(1986)
65=Comanche 4WD-7 Ft. Box(1986)
15=Grand Wagoneer 4 Dr.(1984-86)
25=J-10 Truck 7 Ft. Box(1981-84)
26=J10 Truck 8 Ft. Box(1981-86)
27=J-20 Truck 8 Ft. Box(1981-86)
15=Wagoneer 4 Dr.(1981-83)
75=Wagoneer 4WD-4 Dr.(1984-86)

BODY
CJ=CJ-5, CJ-6, CJ-7, CJ-8, Scrambler(1981-86)
MJ=Comanche Pickup(1986)

STYLES
SJ=Wagoneer(1981-83), Grand Wagoneer(1984-86), Cherokee(1981-83), J-10, J-20(1981-86)
XJ=Wagoneer(1984-86), Cherokee(1984-86)

AR = Use as Required - = Non Illustrated Part P.A.R. = Paint as Required

« RETURN TO GROUP INDEX

AXLE ASSEMBLY, REAR AMC LARGE, DANA 44, DANA 60 SJ CHEROKEE, SJ WAGONEER, J10, J20
Figure 3-2500

81J03 2500

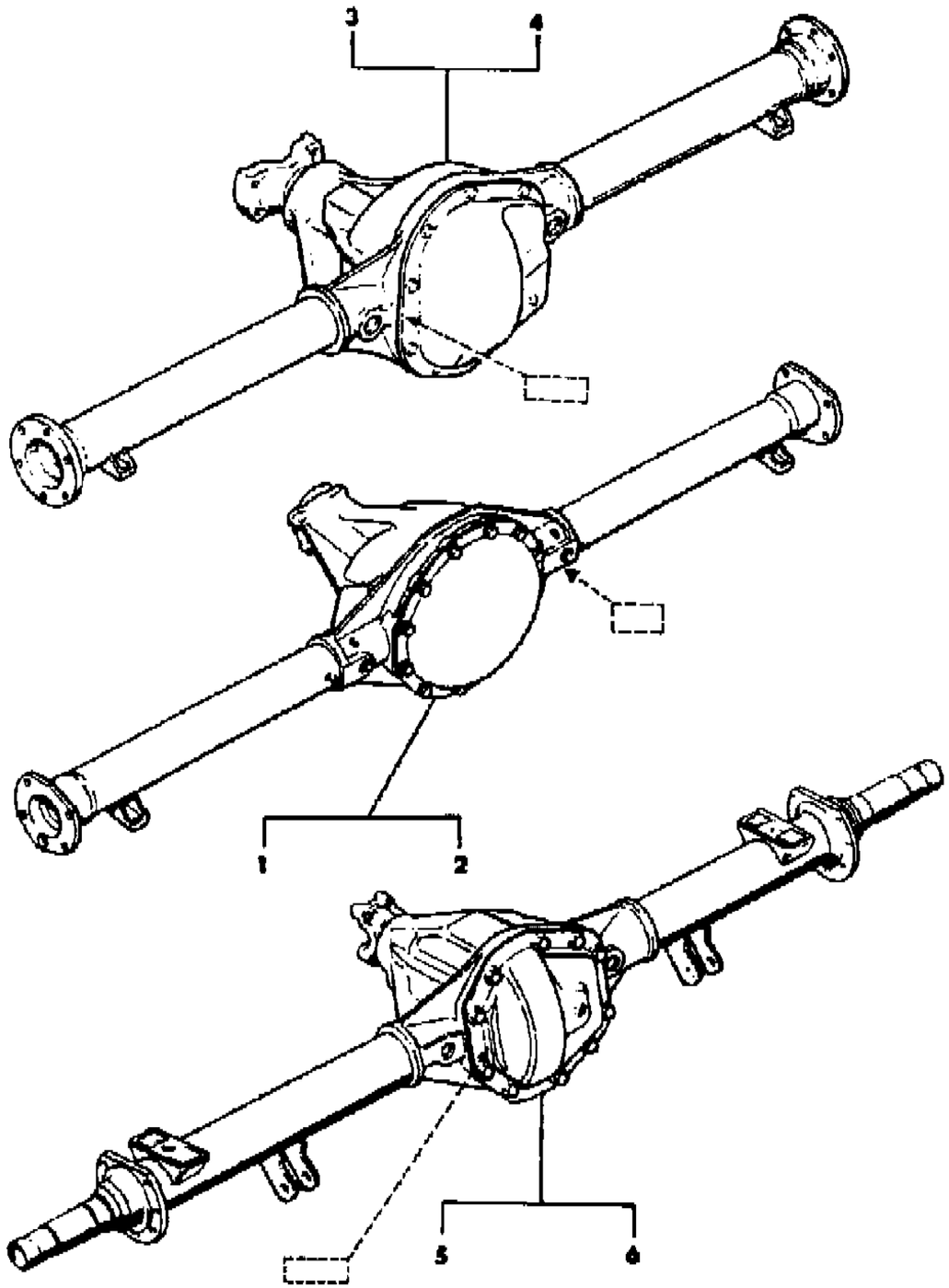

ITEM	PART NUMBER	QTY	BODY	MODEL	DESCRIPTION
1					AXLE ASSEMBLY, AMC Large Without Locking Differential ***
	J536 1201	1		15,16,1	1981-84: 2.73 Ratio Stamped AA or D
	J536 5158	1		15	1985-86: 2.73 Ratio Stamped D
	J536 1211	1		25,26	1981-86: 2.73 Ratio Stamped AA or D
	J536 1203	1		15,16,1	1981-84: 3.31 Ratio Stamped B or BB
	J536 5159	1		15	1985-86: 3.31 Ratio Stamped B
	J536 1208	1		17	1981-83: 3.31 Ratio Stamped B or BB
	J536 1213	1		25,26	1981-86: 3.31 Ratio Stamped B or BB
2					AXLE ASSEMBLY, AMC Large With Locking Differential ***
	J536 1202	1		15,16,1	1981-84: 2.73 Ratio Stamped DD
	J536 5160	1		15	1985-86: 2.73 Ratio Stamped DD
	J536 1212	1		25,26	1981-86: 2.73 Ratio Stamped DD
	J536 1204	1		15,16,1	1981-84: 3.31 Ratio Stamped BB or CC
	J536 5161	1		15	1985-86: 3.31 Ratio Stamped BB
	J536 1209	1		17	1981-83: 3.31 Ratio Stamped BB or CC
	J536 1214	1		25,26	1981-86: 3.31 Ratio Stamped BB or CC
3					AXLE ASSEMBLY, DANA Model 44 Without Locking Differential ***
	8350 3092	1		15	1986: 2.73 Ratio Tagged 8953004028
	8350 3098	1		26	1986: 2.73 Ratio Tagged 8953004032
	8350 3089	1		15	1986: 3.31 Ratio Tagged 8953004030
	8350 3096	1		26	1986: 3.31 Ratio Tagged 8953004034
4					AXLE ASSEMBLY, DANA Model 44 With Locking Differential ***
	8350 3093	1		15	1986: 3.31 Ratio Tagged 8953004031
	8350 3099	1		26	1986: 3.31 Ratio Tagged 8953004035
5					AXLE ASSEMBLY, DANA Model 60 Without Locking Differential ***
	J813 1928	1		27	1981-86: 3.73 Ratio Tagged 5359531, 5363417 or 8953004087
6					AXLE ASSEMBLY, DANA Model 60 With Locking Differential ***
	J813 1927	1		27	1981-86: 3.73 Ratio Tagged 5359532, 5363418 or 8953004086
	J813 1931	1		27	1981-86: 4.88 Ratio Tagged 5359528, 5363419 or 8953004088

MODEL CODES

16=Cherokee 2 Dr.(1981-83)	78=Cherokee 4WD-4 Dr.(1984-86)	64=Comanche 2WD-6 Ft. Box(1986)	25=J-10 Truck 7 Ft. Box(1981-84)
17=Cherokee 2 Dr.(1981-83)	85=CJ-5 (1981-83)	66=Comanche 2WD-7 Ft. Box(1986)	26=J10 Truck 8 Ft. Box(1981-86)
73=Cherokee 2WD-2 Dr.(1984-86)	86=CJ-6(1981)	63=Comanche 4WD-6 Ft. Box(1986)	27=J-20 Truck 8 Ft. Box(1981-86)
74=Cherokee 2WD-4 Dr.(1984-86)	87=CJ-7(1981-86)	65=Comanche 4WD-7 Ft. Box(1986)	15=Wagoneer 4 Dr.(1981-83)
18=Cherokee 4 Dr.(1981-83)	88=CJ-8, Scrambler(1981-86)	15=Grand Wagoneer 4 Dr.(1984-86)	75=Wagoneer 4WD-4 Dr.(1984-86)
77=Cherokee 4WD-2 Dr.(1984-86)			

BODY
CJ=CJ-5, CJ-6, CJ-7, CJ-8, Scrambler(1981-86)
MJ=Comanche Pickup(1986)

STYLES
SJ=Wagoneer(1981-83), Grand Wagoneer(1984-86), Cherokee(1981-83), J-10, J-20(1981-86)
XJ=Wagoneer(1984-86), Cherokee(1984-86)

AR = Use as Required - = Non Illustrated Part P.A.R. = Paint as Required

« RETURN TO GROUP INDEX

AXLE HOUSING, REAR AMC LARGE AXLE SJ CHEROKEE, SJ WAGONEER, J10, J20
Figure 3-2600

81J03 2600

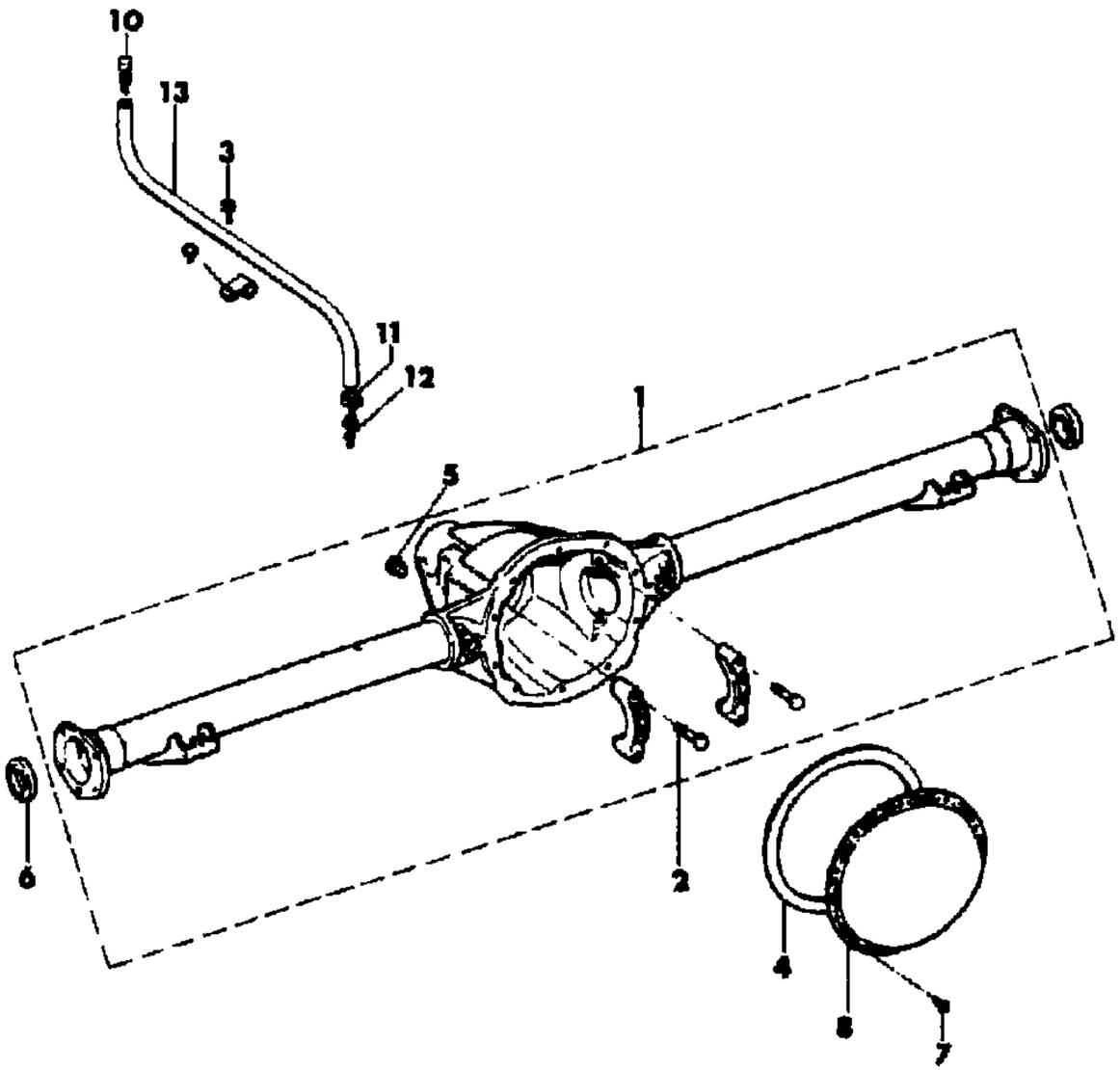

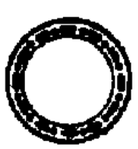

AMC AXLE

ITEM	PART NUMBER	QTY	BODY	MODEL	DESCRIPTION
1					HOUSING, Axle
	J813 0993	1		15,16,1	1981-84
	8350 1400	1		15	1985-86
	J813 0991	1		17	1981-83
	J813 0992	1		25,26	1981-86
2	J400 6554	4			BOLT
3	J400 5063	1			SCREW
4	J317 2122	1			GASKET
5	J400 4751	1			PLUG
6	J323 5929	2			SEAL
7	J099 1546	12			BOLT
8	J321 5943	1			COVER
9	J012 0525	1			CLIP
10	J535 2955	1			BREATHER
11	J322 7851	1			CLAMP
12	J535 3494	1			VENT
13	J812 5823	1			HOSE

MODEL CODES

16=Cherokee 2 Dr.(1981-83)
17=Cherokee 2 Dr.(1981-83)
73=Cherokee 2WD-2 Dr.(1984-86)
74=Cherokee 2WD-4 Dr.(1984-86)
18=Cherokee 4 Dr.(1981-83)
77=Cherokee 4WD-2 Dr.(1984-86)
78=Cherokee 4WD-4 Dr.(1984-86)
85=CJ-5 (1981-83)
86=CJ-6(1981)
87=CJ-7(1981-86)
88=CJ-8, Scrambler(1981-86)
64=Comanche 2WD-6 Ft. Box(1986)
66=Comanche 2WD-7 Ft. Box(1986)
63=Comanche 4WD-6 Ft. Box(1986)
65=Comanche 4WD-7 Ft. Box(1986)
15=Grand Wagoneer 4 Dr.(1984-86)
25=J-10 Truck 7 Ft. Box(1981-84)
26=J10 Truck 8 Ft. Box(1981-86)
27=J-20 Truck 8 Ft. Box(1981-86)
15=Wagoneer 4 Dr.(1981-83)
75=Wagoneer 4WD-4 Dr.(1984-86)

BODY
CJ=CJ-5, CJ-6, CJ-7, CJ-8, Scrambler(1981-86)
MJ=Comanche Pickup(1986)

STYLES
SJ=Wagoneer(1981-83), Grand Wagoneer(1984-86), Cherokee(1981-83), J-10, J-20(1981-86)
XJ=Wagoneer(1984-86), Cherokee(1984-86)

AR = Use as Required - = Non Illustrated Part P.A.R. = Paint as Required

« RETURN TO GROUP INDEX

DIFFERENTIAL AND GEARS, REAR AXLE AMC LARGE AXLE, NON-LOCKING SJ CHEROKEE, SJ WAGONEER, J10
Figure 3-2700

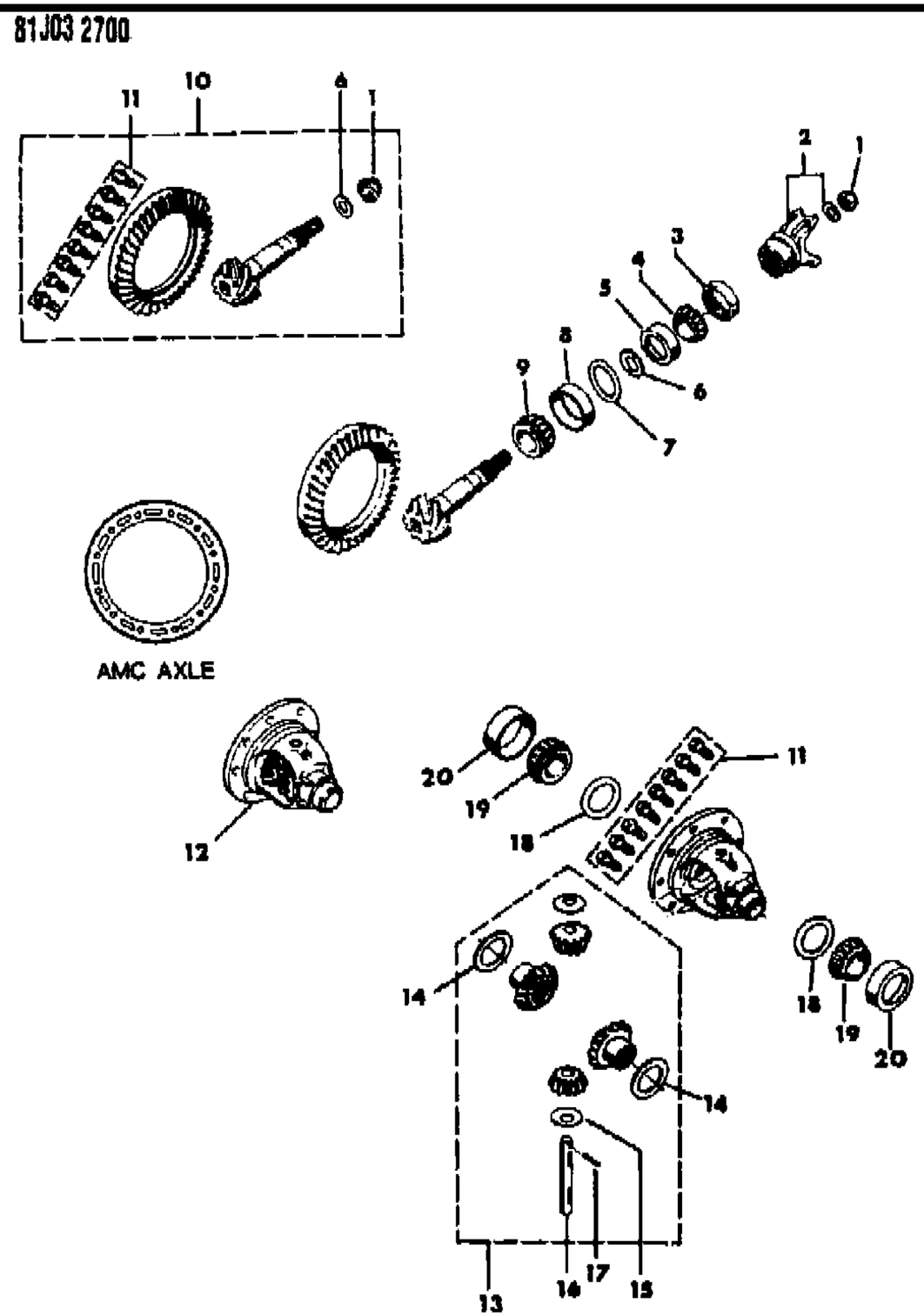

ITEM	PART NUMBER	QTY	BODY	MODEL	DESCRIPTION
1	J318 2601	1			NUT, Pinion
2					YOKE, Pinion
	J813 2702	1			1981-85: With Dust Slinger on Yoke
	8350 2058	1			1985-86: Without Dust Slinger on Yoke
3					SEAL, Pinion
	J320 8474	1			1981-85: With Dust Slinger on Yoke
	5300 2642	1			1985-86: Without Dust Slinger on Yoke
4	J317 2135	1			CONE, Bearing
5	J317 2134	1			CUP, Bearing
6	J318 5971	1			SPACER
7	J320 5567	1			SHIM PACKAGE (18), Pinion ***
8	J317 2564	1			CUP, Bearing
9	J317 2563	1			CONE, Bearing
10					GEAR SET, Rear Axle Ring and Pinion
	J813 2699	1			2.73 Ratio
	J813 2700	1			3.31 Ratio
11	J448 6828	1			BOLT PACKAGE ***
12					CASE ASSEMBLY, Differential
	J323 5503	1			2.73 Ratio
	J323 5502	1			3.31 Ratio
13	J812 7092	1			GEAR SET, Differential
14	J322 0250	2			WASHER, Side Gear
15	J322 2999	2			WASHER, Pinion Gear
16	J321 8195	1			SHAFT, Differential
17	S045 5313	1			PIN
18	J320 5532	1			SHIM PACKAGE (18), Case ***
19	J317 2565	2			CONE, Bearing
20	J317 2566	2			CUP, Bearing

MODEL CODES

16=Cherokee 2 Dr.(1981-83)	78=Cherokee 4WD-4 Dr.(1984-86)	64=Comanche 2WD-6 Ft. Box(1986)	25=J-10 Truck 7 Ft. Box(1981-84)
17=Cherokee 2 Dr.(1981-83)	85=CJ-5 (1981-83)	66=Comanche 2WD-7 Ft. Box(1986)	26=J10 Truck 8 Ft. Box(1981-86)
73=Cherokee 2WD-2 Dr.(1984-86)	86=CJ-6(1981)	63=Comanche 4WD-6 Ft. Box(1986)	27=J-20 Truck 8 Ft. Box(1981-86)
74=Cherokee 2WD-4 Dr.(1984-86)	87=CJ-7(1981-86)	65=Comanche 4WD-7 Ft. Box(1986)	15=Wagoneer 4 Dr.(1981-83)
18=Cherokee 4 Dr.(1981-83)	88=CJ-8, Scrambler(1981-86)	15=Grand Wagoneer 4 Dr.(1984-86)	75=Wagoneer 4WD-4 Dr.(1984-86)
77=Cherokee 4WD-2 Dr.(1984-86)			

BODY
CJ=CJ-5, CJ-6, CJ-7, CJ-8, Scrambler(1981-86)
MJ=Comanche Pickup(1986)

STYLES
SJ=Wagoneer(1981-83), Grand Wagoneer(1984-86), Cherokee(1981-83), J-10, J-20(1981-86)
XJ=Wagoneer(1984-86), Cherokee(1984-86)

AR = Use as Required - = Non Illustrated Part P.A.R. = Paint as Required

« RETURN TO GROUP INDEX

DIFFERENTIAL AND GEARS, REAR AXLE AMC LARGE AXLE, LOCKING SJ CHEROKEE, SJ WAGONEER, J10
Figure 3-2800

81J03 2800

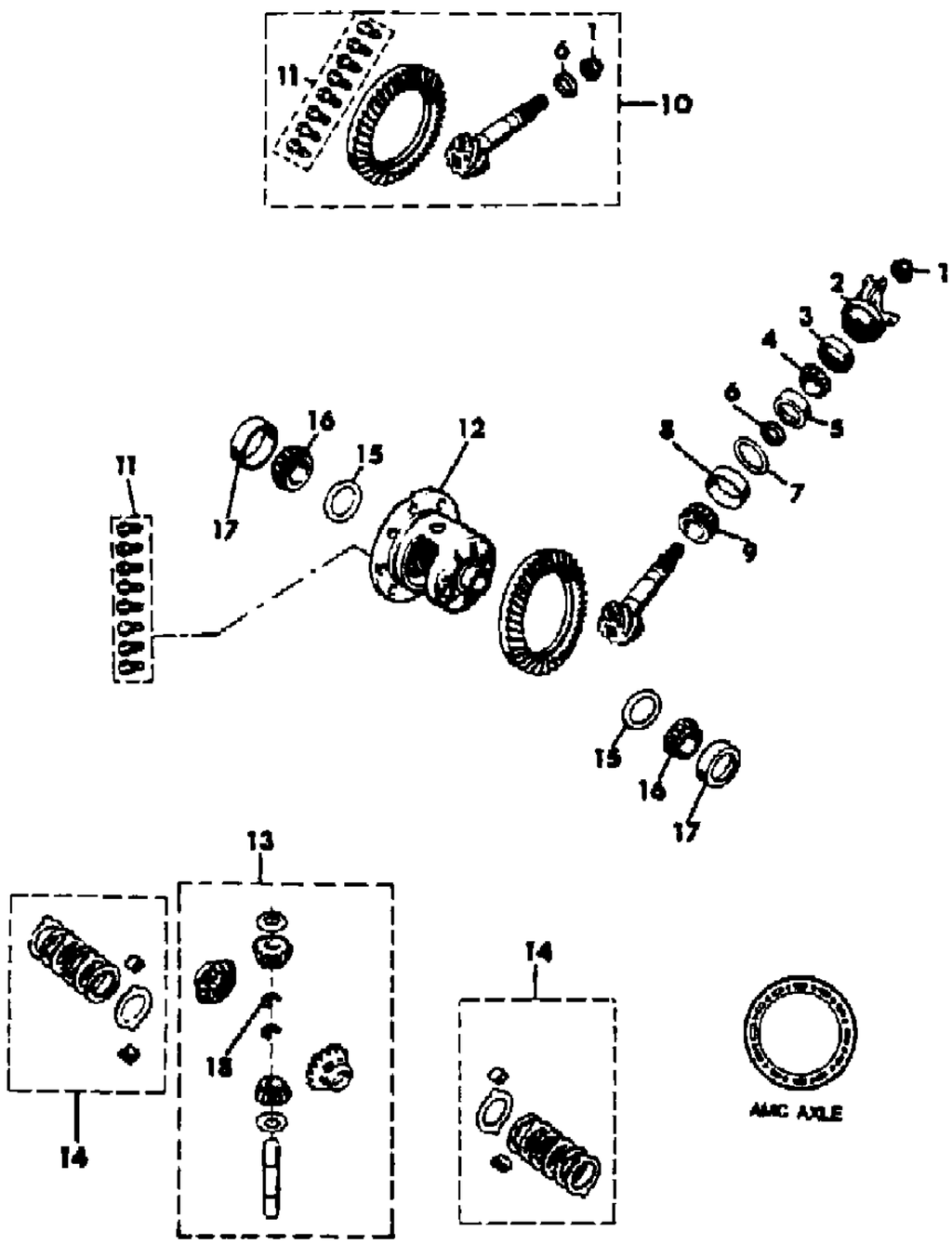

ITEM	PART NUMBER	QTY	BODY	MODEL	DESCRIPTION
1	J318 2601	1			NUT, Pinion
2					YOKE, Pinion
	J813 2702	1			1981-85: With Dust Slinger on Yoke
	8350 2058	1			1985-86: Without Dust Slinger on Yoke
3					SEAL Pinion ***
	J320 8474	1			1981-85: With Dust Slinger on Yoke
	5300 2642	1			1985-86: Without Dust Slinger On Yoke
4	J317 2135	1			CONE, Bearing
5	J317 2134	1			CUP, Bearing
6	J318 5971	1			SPACER
7	J320 5567	1			SHIM PACKAGE (18), Pinion ***
8	J317 2564	1			CUP, Bearing
9	J317 2563	1			Cone, Bearing ***
10					GEAR SET, Rear Axle Ring and Pinion
	J813 2699	1			2.73 Ratio
	J813 2700	1			3.31 Ratio
11	J448 6828	1			BOLT PACKAGE ***
12					CASE ASSEMBLY, Differential
	J323 6264	1			2.73 Ratio
	J323 0153	1			3.31 Ratio
13	J812 0326	1			GEAR SET, Differential
14	J812 0325	1			DISC PACKAGE, Differential ***
15	J320 5532	1			SHIM PACKAGE (18), Case ***
16	J317 2565	2			CONE, Bearing
17	J317 2566	2			CUP, Bearing
18	J812 1787	2			RING, Snap

MODEL CODES

16=Cherokee 2 Dr.(1981-83)
17=Cherokee 2 Dr.(1981-83)
73=Cherokee 2WD-2 Dr.(1984-86)
74=Cherokee 2WD-4 Dr.(1984-86)
18=Cherokee 4 Dr.(1981-83)
77=Cherokee 4WD-2 Dr.(1984-86)
78=Cherokee 4WD-4 Dr.(1984-86)
85=CJ-5 (1981-83)
86=CJ-6(1981)
87=CJ-7(1981-86)
88=CJ-8, Scrambler(1981-86)
64=Comanche 2WD-6 Ft. Box(1986)
66=Comanche 2WD-7 Ft. Box(1986)
63=Comanche 4WD-6 Ft. Box(1986)
65=Comanche 4WD-7 Ft. Box(1986)
15=Grand Wagoneer 4 Dr.(1984-86)
25=J-10 Truck 7 Ft. Box(1981-84)
26=J10 Truck 8 Ft. Box(1981-86)
27=J-20 Truck 8 Ft. Box(1981-86)
15=Wagoneer 4 Dr.(1981-83)
75=Wagoneer 4WD-4 Dr.(1984-86)

BODY
CJ=CJ-5, CJ-6, CJ-7, CJ-8, Scrambler(1981-86)
MJ=Comanche Pickup(1986)

STYLES
SJ=Wagoneer(1981-83), Grand Wagoneer(1984-86), Cherokee(1981-83), J-10, J-20(1981-86)
XJ=Wagoneer(1984-86), Cherokee(1984-86)

AR = Use as Required - = Non Illustrated Part P.A.R. = Paint as Required

« RETURN TO GROUP INDEX

SHAFTS, REAR AXLE AMC LARGE AXLE SJ CHEROKEE, SJ WAGONEER, J10
Figure 3-2900

81J03 2900

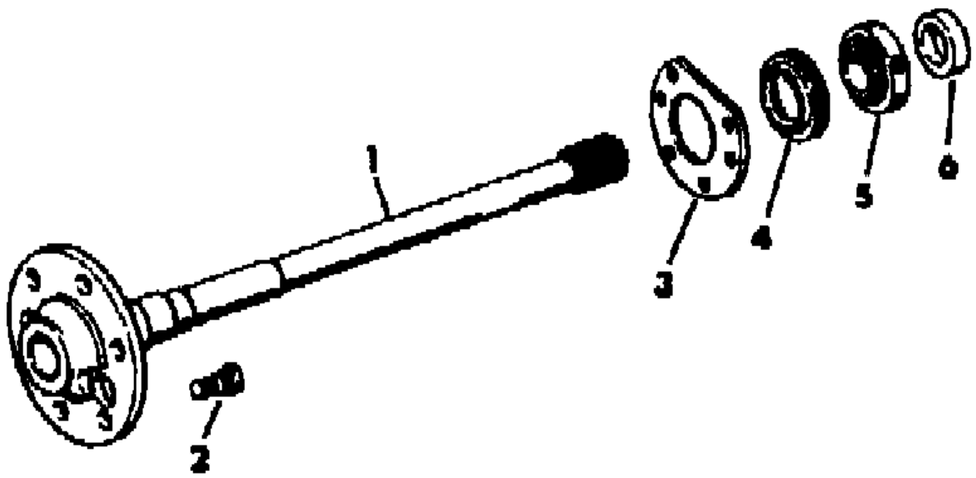

ITEM	PART NUMBER	QTY	BODY	MODEL	DESCRIPTION
1					SHAFTS, Rear Axle ***
					Right
	J323 5806	1		15,16,1	
	J323 5810	1		17	
	J323 5808	1		25,26	
					Left
	J323 5807	1		15,16,1	
	J323 5811	1		17	
	J323 5809	1		25,26	
2	J323 0413	12			STUD
3	J323 9073	2			RETAINER
4	J324 0086	2			SEAL
5	J323 0115	2			BEARING
6	J323 9074	2			RING

MODEL CODES
16=Cherokee 2 Dr.(1981-83)
17=Cherokee 2 Dr.(1981-83)
73=Cherokee 2WD-2 Dr.(1984-86)
74=Cherokee 2WD-4 Dr.(1984-86)
18=Cherokee 4 Dr.(1981-83)
77=Cherokee 4WD-2 Dr.(1984-86)
78=Cherokee 4WD-4 Dr.(1984-86)
85=CJ-5 (1981-83)
86=CJ-6(1981)
87=CJ-7(1981-86)
88=CJ-8, Scrambler(1981-86)
64=Comanche 2WD-6 Ft. Box(1986)
66=Comanche 2WD-7 Ft. Box(1986)
63=Comanche 4WD-6 Ft. Box(1986)
65=Comanche 4WD-7 Ft. Box(1986)
15=Grand Wagoneer 4 Dr.(1984-86)
25=J-10 Truck 7 Ft. Box(1981-84)
26=J10 Truck 8 Ft. Box(1981-86)
27=J-20 Truck 8 Ft. Box(1981-86)
15=Wagoneer 4 Dr.(1981-83)
75=Wagoneer 4WD-4 Dr.(1984-86)

BODY
CJ=CJ-5, CJ-6, CJ-7, CJ-8, Scrambler(1981-86)
MJ=Comanche Pickup(1986)

STYLES
SJ=Wagoneer(1981-83), Grand Wagoneer(1984-86), Cherokee(1981-83), J-10, J-20(1981-86)
XJ=Wagoneer(1984-86), Cherokee(1984-86)

AR = Use as Required - = Non Illustrated Part P.A.R. = Paint as Required

« RETURN TO GROUP INDEX

AXLE HOUSING, REAR DANA MODEL 44 SJ CHEROKEE, SJ WAGONEER, J10
Figure 3-3000

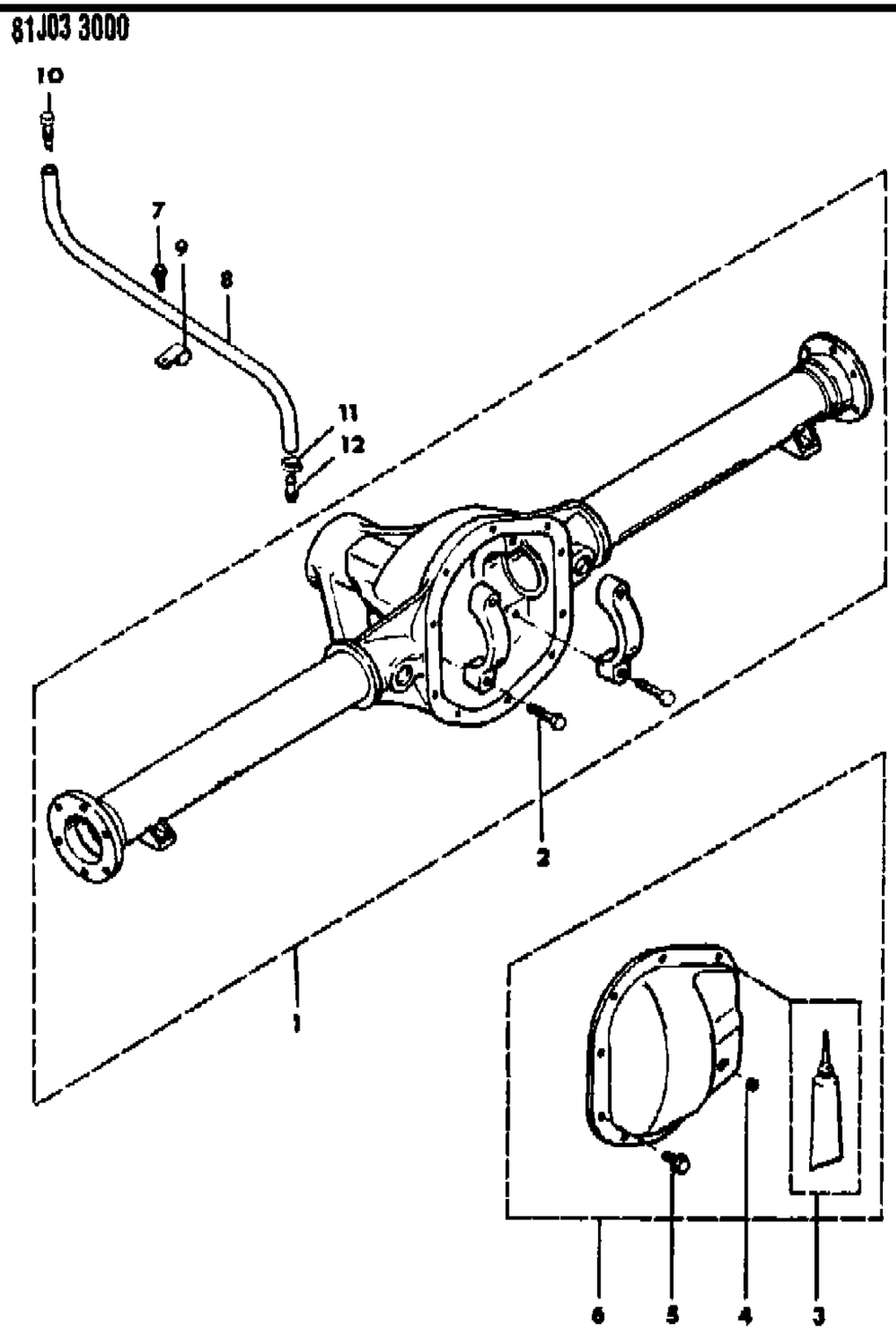

ITEM	PART NUMBER	QTY	BODY	MODEL	DESCRIPTION
1					HOUSING, Axle
	8350 3088	1		15	
	8350 3097	1		26	
2	8350 1515	4			BOLT
3	J899 3317	1			SEALER
4					PLUG
	8350 1571	1			3/4"-14 NPT
	S044 4588	1			1/2"-14 NPT
5	J099 1546	10			BOLT
6	8350 3058	1			COVER PACKAGE
7	J942 6241	1			SCREW
8	J812 5823	1			HOSE
9	J012 0525	1			CLIP
10	J535 2955	1			BREATHER
11	J322 7851	1			CLAMP
12	J318 7999	1			VENT

MODEL CODES

16=Cherokee 2 Dr.(1981-83)
17=Cherokee 2 Dr.(1981-83)
73=Cherokee 2WD-2 Dr.(1984-86)
74=Cherokee 2WD-4 Dr.(1984-86)
18=Cherokee 4 Dr.(1981-83)
77=Cherokee 4WD-2 Dr.(1984-86)
78=Cherokee 4WD-4 Dr.(1984-86)
85=CJ-5 (1981-83)
86=CJ-6(1981)
87=CJ-7(1981-86)
88=CJ-8, Scrambler(1981-86)
64=Comanche 2WD-6 Ft. Box(1986)
66=Comanche 2WD-7 Ft. Box(1986)
63=Comanche 4WD-6 Ft. Box(1986)
65=Comanche 4WD-7 Ft. Box(1986)
15=Grand Wagoneer 4 Dr.(1984-86)
25=J-10 Truck 7 Ft. Box(1981-84)
26=J10 Truck 8 Ft. Box(1981-86)
27=J-20 Truck 8 Ft. Box(1981-86)
15=Wagoneer 4 Dr.(1981-83)
75=Wagoneer 4WD-4 Dr.(1984-86)

BODY
CJ=CJ-5, CJ-6, CJ-7, CJ-8, Scrambler(1981-86)
MJ=Comanche Pickup(1986)

STYLES
SJ=Wagoneer(1981-83), Grand Wagoneer(1984-86), Cherokee(1981-83), J-10, J-20(1981-86)
XJ=Wagoneer(1984-86), Cherokee(1984-86)

AR = Use as Required - = Non Illustrated Part P.A.R. = Paint as Required

« RETURN TO GROUP INDEX

DIFFERENTIAL AND GEARS, REAR AXLE DANA MODEL 44, NON-LOCKING SJ CHEROKEE, SJ WAGONEER, J10
Figure 3-3100

81J03 3100

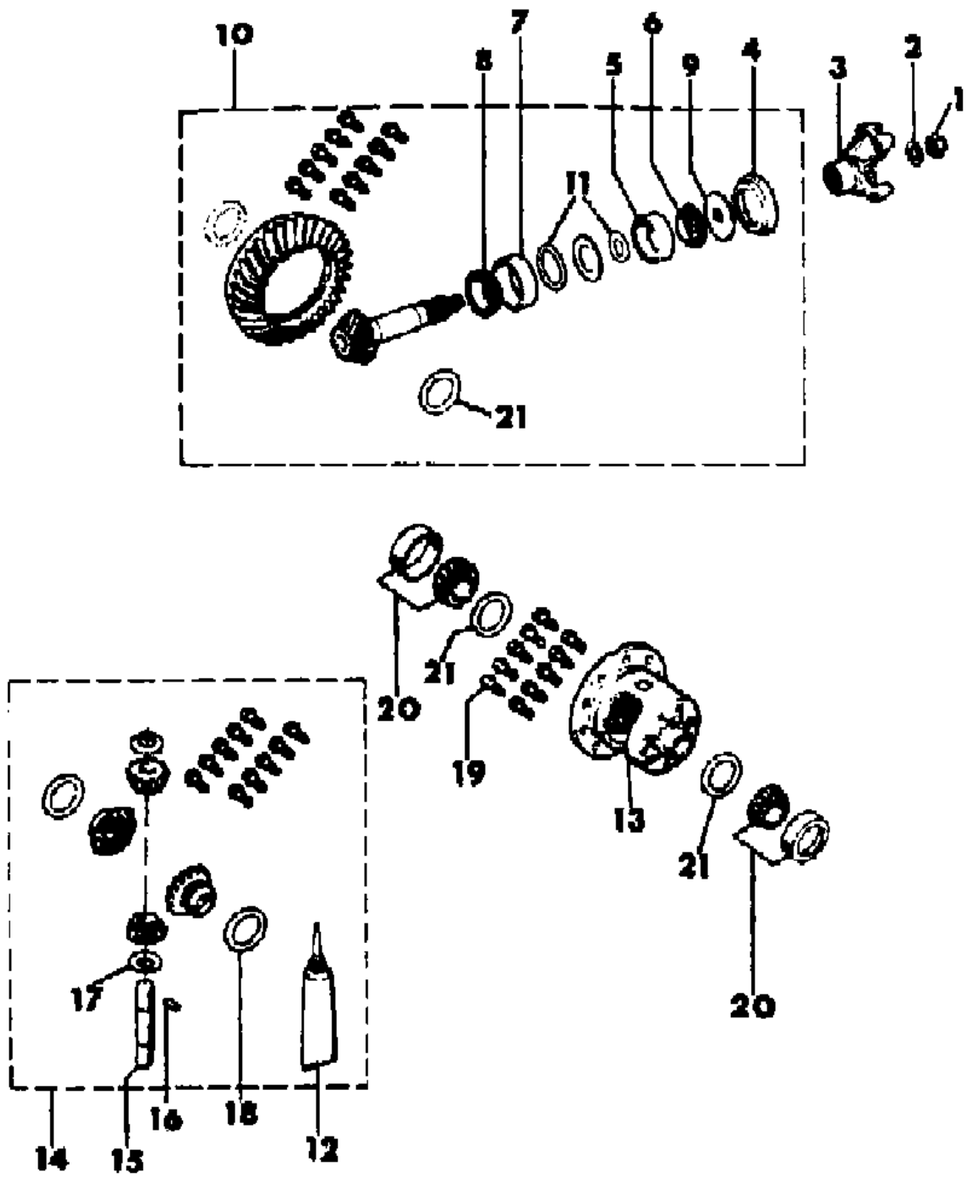

ITEM	PART NUMBER	QTY	BODY	MODEL	DESCRIPTION
1	J080 1367	1			NUT, Pinion
2	J063 6570	1			WASHER, Pinion
3					YOKE, Pinion
	J813 3241	1			With Dust Slinger on Yoke
	8350 3388	1			Without Dust Slinger on Yoke
4					SEAL, Pinion
	J099 8092	1			With Dust Slinger on Yoke
	8350 3390	1			Without Dust Sliinger on Yoke
5	J005 2879	1			CUP, Bearing
6	J005 2878	1			CONE, Bearing
7	J005 2877	1			CUP, Bearing
8	J080 7266	1			CONE, Bearing
9	J063 6566	1			SLINGER
10					GEAR SET, Rear Axle Ring And Pinion
	J813 4222	1			2.73 Ratio
	J813 4219	1			3.31 Ratio
11	J812 9221	1			SHIM PACKAGE (15), Pinion ***
12	J899 3317	1			SEALER
13	8350 3073	1			CASE ASSEMBLY, Differential
14	8350 3068	1			GEAR SET, Differential
15	8350 3069	1			SHAFT, Differential
16	J063 6360	1			PIN
17	J064 5790	2			WASHER, Pinion Gear
18	J080 5325	2			WASHER, Side Gear
19	J064 9454	10			BOLT
20	J812 4071	1			BEARING PACKAGE ***
21	J812 9222	1			SHIM PACKAGE (8), Case ***

MODEL CODES

16=Cherokee 2 Dr.(1981-83)
17=Cherokee 2 Dr.(1981-83)
73=Cherokee 2WD-2 Dr.(1984-86)
74=Cherokee 2WD-4 Dr.(1984-86)
18=Cherokee 4 Dr.(1981-83)
77=Cherokee 4WD-2 Dr.(1984-86)
78=Cherokee 4WD-4 Dr.(1984-86)
85=CJ-5 (1981-83)
86=CJ-6(1981)
87=CJ-7(1981-86)
88=CJ-8, Scrambler(1981-86)
64=Comanche 2WD-6 Ft. Box(1986)
66=Comanche 2WD-7 Ft. Box(1986)
63=Comanche 4WD-6 Ft. Box(1986)
65=Comanche 4WD-7 Ft. Box(1986)
15=Grand Wagoneer 4 Dr.(1984-86)
25=J-10 Truck 7 Ft. Box(1981-84)
26=J10 Truck 8 Ft. Box(1981-86)
27=J-20 Truck 8 Ft. Box(1981-86)
15=Wagoneer 4 Dr.(1981-83)
75=Wagoneer 4WD-4 Dr.(1984-86)

BODY
CJ=CJ-5, CJ-6, CJ-7, CJ-8, Scrambler(1981-86)
MJ=Comanche Pickup(1986)

STYLES
SJ=Wagoneer(1981-83), Grand Wagoneer(1984-86), Cherokee(1981-83), J-10, J-20(1981-86)
XJ=Wagoneer(1984-86), Cherokee(1984-86)

AR = Use as Required - = Non Illustrated Part P.A.R. = Paint as Required

« RETURN TO GROUP INDEX

DIFFERENTIAL AND GEARS, REAR AXLE DANA MODEL 44, LOCKING SJ CHEROKEE, SJ WAGONEER, J10
Figure 3-3200

81J03 3200

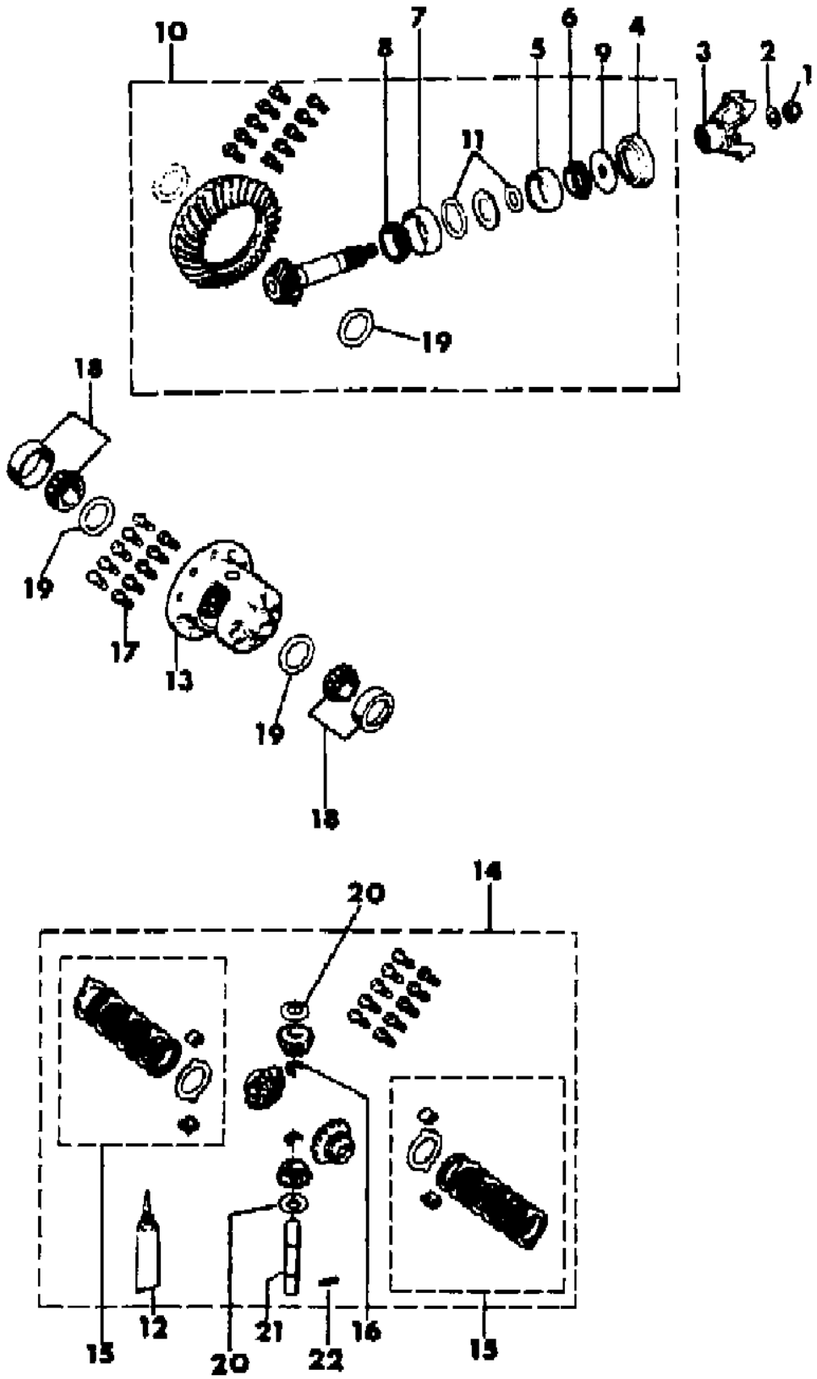

ITEM	PART NUMBER	QTY	BODY	MODEL	DESCRIPTION
1	J080 1367	1			NUT, Pinion
2	J063 6570	1			WASHER, Pinion
3					YOKE, Pinion
	J813 3241	1			With Dust Slinger on Yoke
	8350 3388	1			Without Dust Slinger on Yoke
4					SEAL, Pinion
	J099 8092	1			With Dust Slinger on Yoke
	8350 3390	1			Without Dust Slinger on Yoke
5	J005 2879	1			CUP, Bearing
6	J005 2878	1			CONE, Bearing
7	J005 2877	1			CUP, Bearing
8	J080 7266	1			CONE, Bearing
9	J063 6566	1			SLINGER
10	J813 4219	1			GEAR SET, Rear Axle Ring and Pinion
11	J812 9221	1			SHIM PACKAGE (15), Pinion ***
12	J899 3317	1			SEALER
13	J812 9218	1			CASE ASSEMBLY, Differential
14	J812 9220	1			GEAR SET, Differential
15	J099 4345	1			DISC PACKAGE, Differential ***
16	8350 3070	2			RING, Snap
17	J064 9454	10			BOLT
18	J812 4071	1			BEARING PACKAGE ***
19	J812 9222	1			SHIM PACKAGE (8), Case ***
20	J064 5790	2			WASHER, Pinion Gear
21	8350 3069	1			SHAFT, Secured by roll pin #22
22	J063 6360	1			PIN

MODEL CODES

16=Cherokee 2 Dr.(1981-83)
17=Cherokee 2 Dr.(1981-83)
73=Cherokee 2WD-2 Dr.(1984-86)
74=Cherokee 2WD-4 Dr.(1984-86)
18=Cherokee 4 Dr.(1981-83)
77=Cherokee 4WD-2 Dr.(1984-86)
78=Cherokee 4WD-4 Dr.(1984-86)
85=CJ-5 (1981-83)
86=CJ-6(1981)
87=CJ-7(1981-86)
88=CJ-8, Scrambler(1981-86)
64=Comanche 2WD-6 Ft. Box(1986)
66=Comanche 2WD-7 Ft. Box(1986)
63=Comanche 4WD-6 Ft. Box(1986)
65=Comanche 4WD-7 Ft. Box(1986)
15=Grand Wagoneer 4 Dr.(1984-86)
25=J-10 Truck 7 Ft. Box(1981-84)
26=J10 Truck 8 Ft. Box(1981-86)
27=J-20 Truck 8 Ft. Box(1981-86)
15=Wagoneer 4 Dr.(1981-83)
75=Wagoneer 4WD-4 Dr.(1984-86)

BODY
CJ=CJ-5, CJ-6, CJ-7, CJ-8, Scrambler(1981-86)
MJ=Comanche Pickup(1986)

STYLES
SJ=Wagoneer(1981-83), Grand Wagoneer(1984-86), Cherokee(1981-83), J-10, J-20(1981-86)
XJ=Wagoneer(1984-86), Cherokee(1984-86)

AR = Use as Required - = Non Illustrated Part P.A.R. = Paint as Required

« RETURN TO GROUP INDEX

SHAFTS, REAR AXLE DANA MODEL 44 SJ CHEROKEE, SJ WAGONEER, J10
Figure 3-3300

81J03 3300

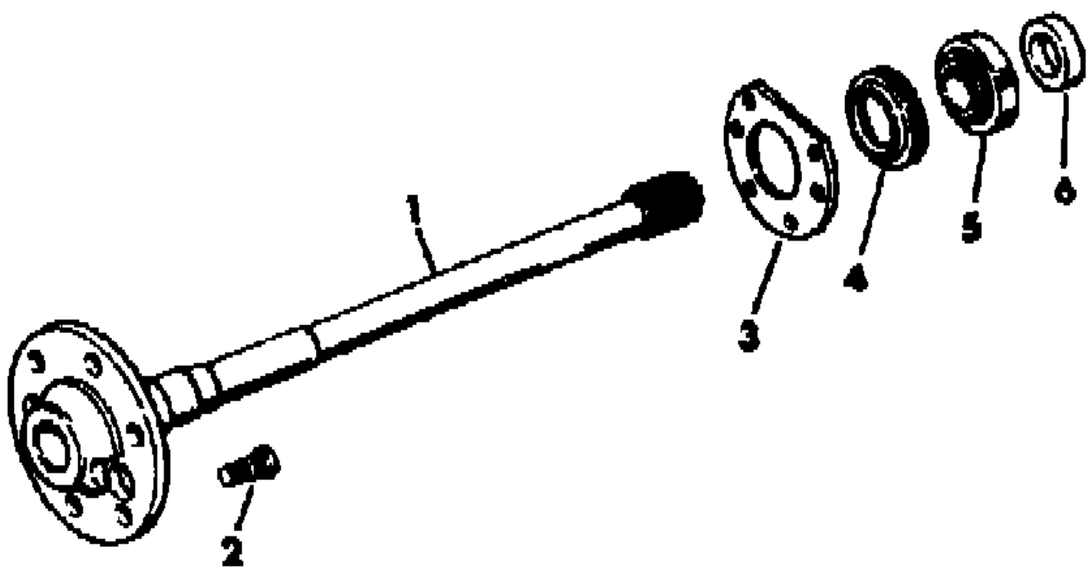

ITEM	PART NUMBER	QTY	BODY	MODEL	DESCRIPTION
1					SHAFT, Rear Axle
					Right
	8350 3090	1		15	
	8350 3094	1		26	
					Left
	8350 3091	1		15	
	8350 3095	1		26	
2	J323 0413	12			STUD
3	J323 9073	2			RETAINER
4	J324 0086	2			SEAL
5	J323 0115	2			BEARING
6	8350 3077	2			RING, Retaining

MODEL CODES

16=Cherokee 2 Dr.(1981-83)
17=Cherokee 2 Dr.(1981-83)
73=Cherokee 2WD-2 Dr.(1984-86)
74=Cherokee 2WD-4 Dr.(1984-86)
18=Cherokee 4 Dr.(1981-83)
77=Cherokee 4WD-2 Dr.(1984-86)
78=Cherokee 4WD-4 Dr.(1984-86)
85=CJ-5 (1981-83)
86=CJ-6(1981)
87=CJ-7(1981-86)
88=CJ-8, Scrambler(1981-86)
64=Comanche 2WD-6 Ft. Box(1986)
66=Comanche 2WD-7 Ft. Box(1986)
63=Comanche 4WD-6 Ft. Box(1986)
65=Comanche 4WD-7 Ft. Box(1986)
15=Grand Wagoneer 4 Dr.(1984-86)
25=J-10 Truck 7 Ft. Box(1981-84)
26=J10 Truck 8 Ft. Box(1981-86)
27=J-20 Truck 8 Ft. Box(1981-86)
15=Wagoneer 4 Dr.(1981-83)
75=Wagoneer 4WD-4 Dr.(1984-86)

BODY
CJ=CJ-5, CJ-6, CJ-7, CJ-8, Scrambler(1981-86)
MJ=Comanche Pickup(1986)

STYLES
SJ=Wagoneer(1981-83), Grand Wagoneer(1984-86), Cherokee(1981-83), J-10, J-20(1981-86)
XJ=Wagoneer(1984-86), Cherokee(1984-86)

AR = Use as Required - = Non Illustrated Part P.A.R. = Paint as Required

« RETURN TO GROUP INDEX

AXLE HOUSING, REAR DANA MODEL 60 J20
Figure 3-3400

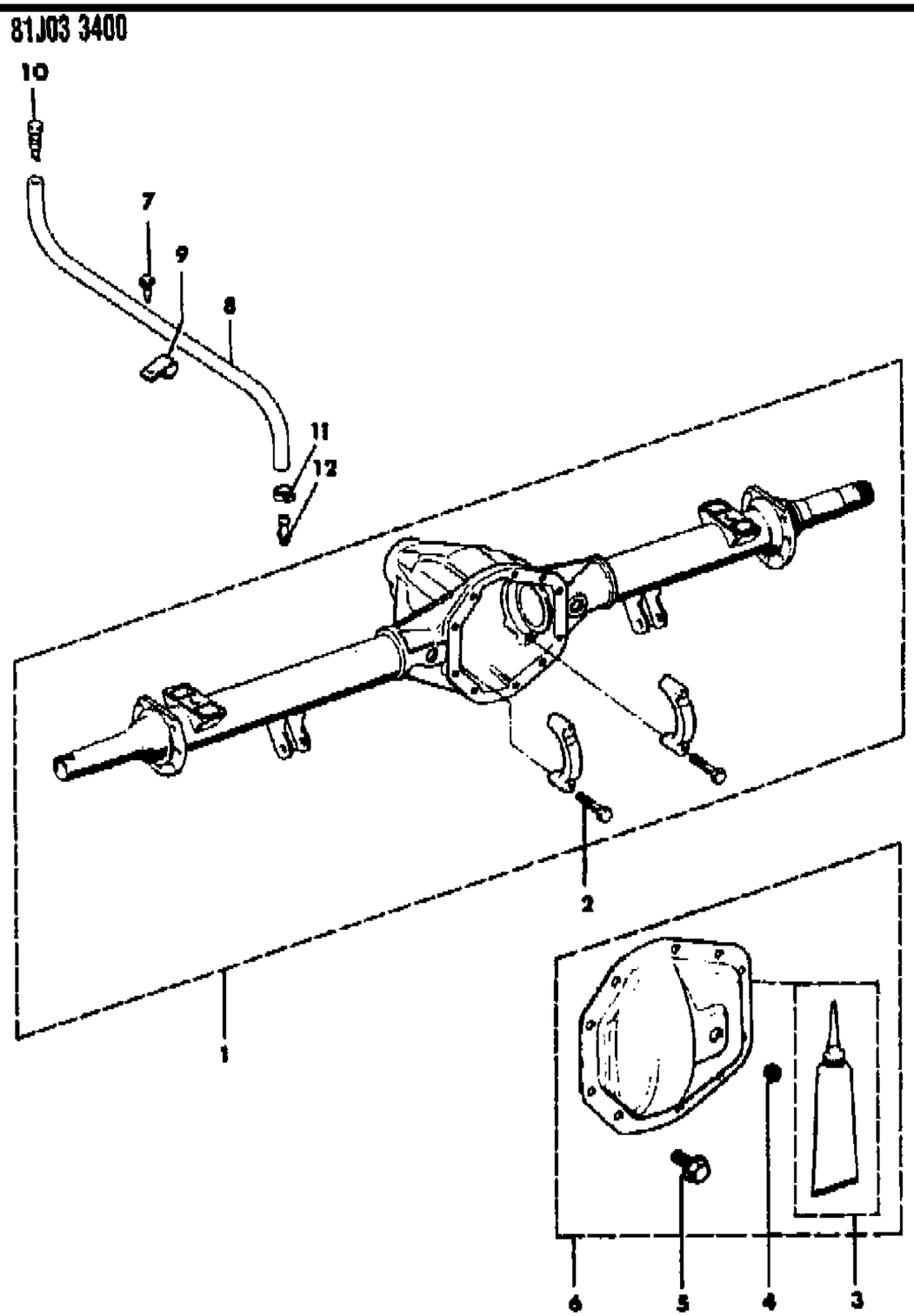

ITEM	PART NUMBER	QTY	BODY	MODEL	DESCRIPTION
1	8350 0147	1			HOUSING, Axle
2	8350 1515	4			BOLT
3	J899 3317	1			SEALER
4	J812 7358	1			PLUG
5	J099 1106	10			BOLT
6	J812 9200	1			COVER PACKAGE
7	J942 6241	1			SCREW
8	J812 5823	1			HOSE
9	J012 0526	1			CLIP
10	J535 2955	1			BREATHER
11	J322 7851	1			CLAMP
12	J535 3494	1			VENT

MODEL CODES
16=Cherokee 2 Dr.(1981-83)
17=Cherokee 2 Dr.(1981-83)
73=Cherokee 2WD-2 Dr.(1984-86)
74=Cherokee 2WD-4 Dr.(1984-86)
18=Cherokee 4 Dr.(1981-83)
77=Cherokee 4WD-2 Dr.(1984-86)
78=Cherokee 4WD-4 Dr.(1984-86)
85=CJ-5 (1981-83)
86=CJ-6(1981)
87=CJ-7(1981-86)
88=CJ-8, Scrambler(1981-86)
64=Comanche 2WD-6 Ft. Box(1986)
66=Comanche 2WD-7 Ft. Box(1986)
63=Comanche 4WD-6 Ft. Box(1986)
65=Comanche 4WD-7 Ft. Box(1986)
15=Grand Wagoneer 4 Dr.(1984-86)
25=J-10 Truck 7 Ft. Box(1981-84)
26=J10 Truck 8 Ft. Box(1981-86)
27=J-20 Truck 8 Ft. Box(1981-86)
15=Wagoneer 4 Dr.(1981-83)
75=Wagoneer 4WD-4 Dr.(1984-86)

BODY
CJ=CJ-5, CJ-6, CJ-7, CJ-8, Scrambler(1981-86)
MJ=Comanche Pickup(1986)

STYLES
SJ=Wagoneer(1981-83), Grand Wagoneer(1984-86), Cherokee(1981-83), J-10, J-20(1981-86)
XJ=Wagoneer(1984-86), Cherokee(1984-86)

AR = Use as Required - = Non Illustrated Part P.A.R. = Paint as Required

« RETURN TO GROUP INDEX

DIFFERENTIAL AND GEARS, REAR AXLE DANA MODEL 60, NON-LOCKING J20
Figure 3-3500

81J03 3500

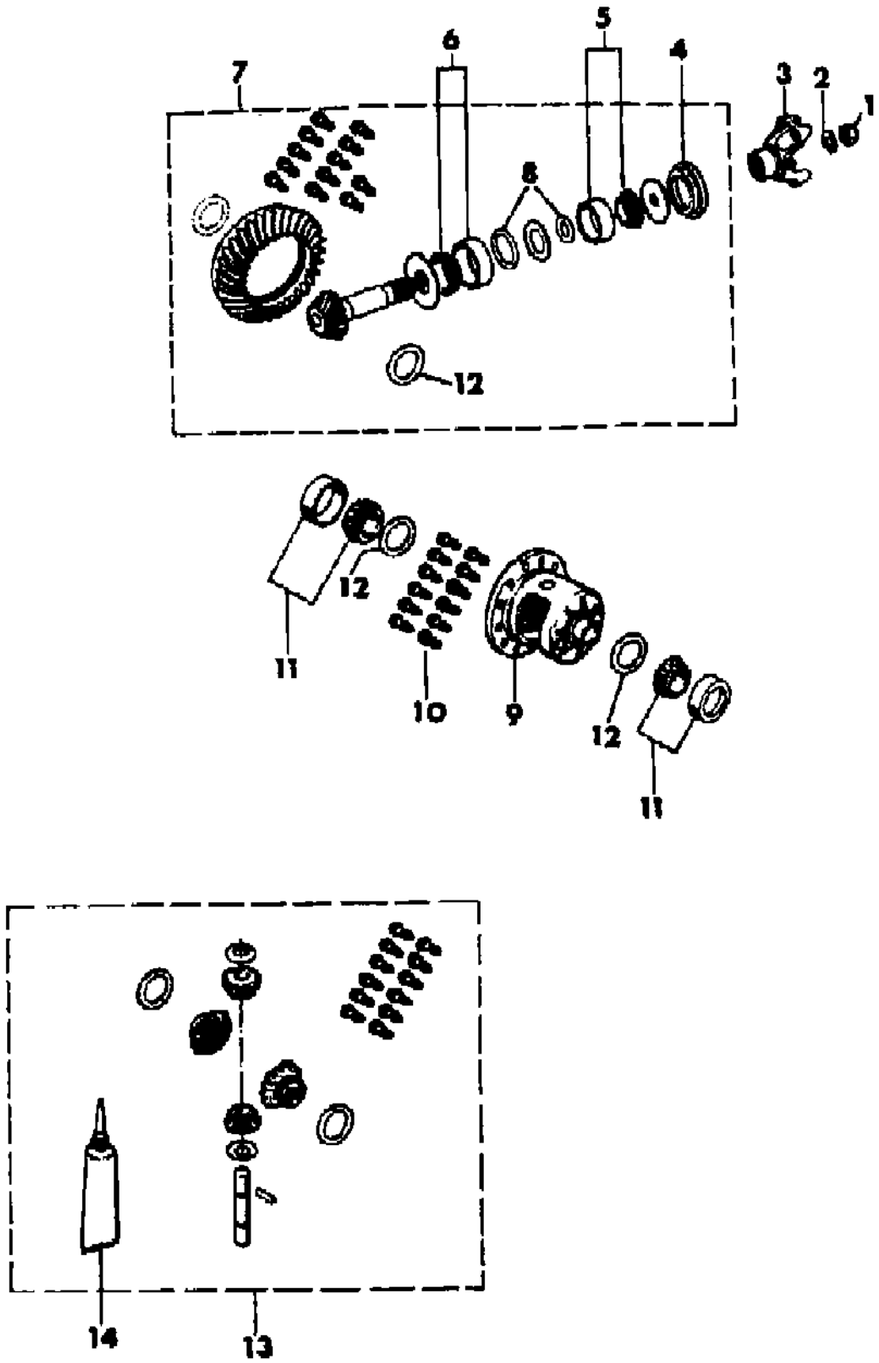

ITEM	PART NUMBER	QTY	BODY	MODEL	DESCRIPTION
1	J091 9585	1			NUT, Pinion
2	J091 9612	1			WASHER, Pinion
3	J813 4809	1			YOKE, Pinion
4	J813 4810	1			SEAL, Pinion
5	J812 4027	1			BEARING PACKAGE, Outer ***
6	J812 4026	1			BEARING PACKAGE, Inner ***
7					GEAR SET, Rear Axle Ring and Pinion
	J812 9234	1			3.73 Ratio
	J812 9236	1			4.88 Ratio
8	J812 9246	1			SHIM PACKAGE (15), Pinion ***
9	J812 9230	1			CASE ASSEMBLY, Differential
10	J091 9586	12			BOLT
11	J812 4028	1			BEARING PACKAGE, Case ***
12	J812 9242	1			SHIM PACKAGE (8), Case ***
13	J812 9241	1			GEAR SET, Differential
14	J899 3317	1			SEALER

MODEL CODES

16=Cherokee 2 Dr.(1981-83)
17=Cherokee 2 Dr.(1981-83)
73=Cherokee 2WD-2 Dr.(1984-86)
74=Cherokee 2WD-4 Dr.(1984-86)
18=Cherokee 4 Dr.(1981-83)
77=Cherokee 4WD-2 Dr.(1984-86)
78=Cherokee 4WD-4 Dr.(1984-86)
85=CJ-5 (1981-83)
86=CJ-6(1981)
87=CJ-7(1981-86)
88=CJ-8, Scrambler(1981-86)
64=Comanche 2WD-6 Ft. Box(1986)
66=Comanche 2WD-7 Ft. Box(1986)
63=Comanche 4WD-6 Ft. Box(1986)
65=Comanche 4WD-7 Ft. Box(1986)
15=Grand Wagoneer 4 Dr.(1984-86)
25=J-10 Truck 7 Ft. Box(1981-84)
26=J10 Truck 8 Ft. Box(1981-86)
27=J-20 Truck 8 Ft. Box(1981-86)
15=Wagoneer 4 Dr.(1981-83)
75=Wagoneer 4WD-4 Dr.(1984-86)

BODY
CJ=CJ-5, CJ-6, CJ-7, CJ-8, Scrambler(1981-86)
MJ=Comanche Pickup(1986)

STYLES
SJ=Wagoneer(1981-83), Grand Wagoneer(1984-86), Cherokee(1981-83), J-10, J-20(1981-86)
XJ=Wagoneer(1984-86), Cherokee(1984-86)

AR = Use as Required - = Non Illustrated Part P.A.R. = Paint as Required

« RETURN TO GROUP INDEX

DIFFERENTIAL AND GEARS, REAR AXLE DANA MODEL 60, LOCKING J20
Figure 3-3600

81J03 3600

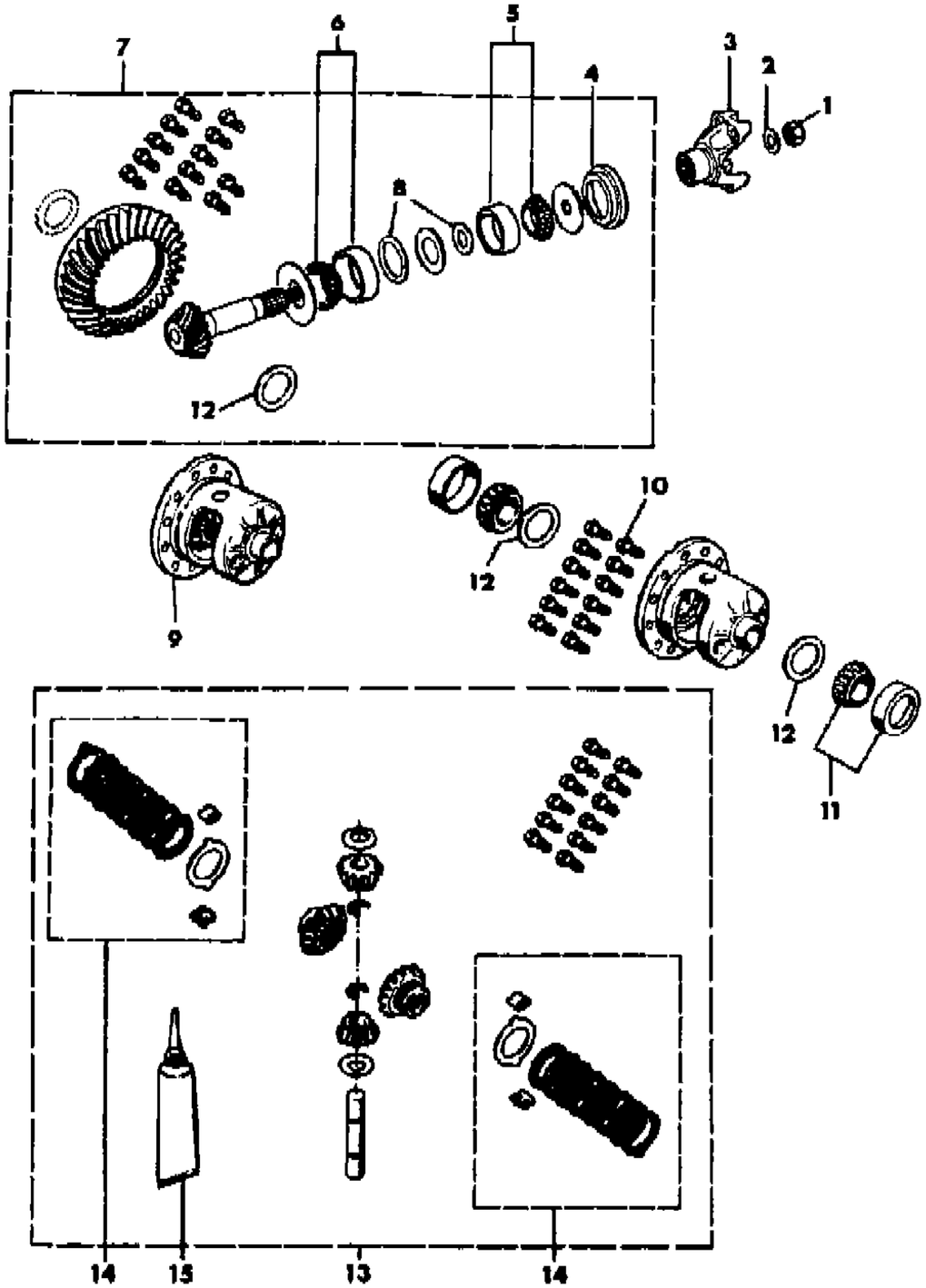

ITEM	PART NUMBER	QTY	BODY	MODEL	DESCRIPTION
1	J091 9585	1			NUT, Pinion
2	J091 9612	1			WASHER, Pinion
3	J813 4809	1			YOKE, Pinion
4	J813 4810	1			SEAL, Pinion
5	J812 4027	1			BEARING PACKAGE, Outer ***
6	J812 4026	1			BEARING PACKAGE, Inner ***
7					GEAR SET, Rear Axle Ring and Pinion
	J812 9234	1			3.73 Ratio
	J812 9236	1			4.88 Ratio
8	J812 9246	1			SHIM PACKAGE (15), Pinion ***
9					CASE ASSEMBLY, Differential
	J812 9229	1			3.73 Ratio
	J812 9284	1			4.88 Ratio
10	J091 9586	12			BOLT
11	J812 4028	1			BEARING PACKAGE, Case ***
12	J812 9242	1			SHIM PACKAGE (8), Case ***
13	J812 9240	1			GEAR SET, Differential
14	J812 2379	1			DISC PACKAGE, Differential ***
15	J899 3317	1			SEALER

MODEL CODES

16=Cherokee 2 Dr.(1981-83)
17=Cherokee 2 Dr.(1981-83)
73=Cherokee 2WD-2 Dr.(1984-86)
74=Cherokee 2WD-4 Dr.(1984-86)
18=Cherokee 4 Dr.(1981-83)
77=Cherokee 4WD-2 Dr.(1984-86)
78=Cherokee 4WD-4 Dr.(1984-86)
85=CJ-5 (1981-83)
86=CJ-6(1981)
87=CJ-7(1981-86)
88=CJ-8, Scrambler(1981-86)
64=Comanche 2WD-6 Ft. Box(1986)
66=Comanche 2WD-7 Ft. Box(1986)
63=Comanche 4WD-6 Ft. Box(1986)
65=Comanche 4WD-7 Ft. Box(1986)
15=Grand Wagoneer 4 Dr.(1984-86)
25=J-10 Truck 7 Ft. Box(1981-84)
26=J10 Truck 8 Ft. Box(1981-86)
27=J-20 Truck 8 Ft. Box(1981-86)
15=Wagoneer 4 Dr.(1981-83)
75=Wagoneer 4WD-4 Dr.(1984-86)

BODY
CJ=CJ-5, CJ-6, CJ-7, CJ-8, Scrambler(1981-86)
MJ=Comanche Pickup(1986)

STYLES
SJ=Wagoneer(1981-83), Grand Wagoneer(1984-86), Cherokee(1981-83), J-10, J-20(1981-86)
XJ=Wagoneer(1984-86), Cherokee(1984-86)

AR = Use as Required - = Non Illustrated Part P.A.R. = Paint as Required

« RETURN TO GROUP INDEX

SHAFTS, REAR AXLE DANA MODEL 60 J20
Figure 3-3700

81J03 3700

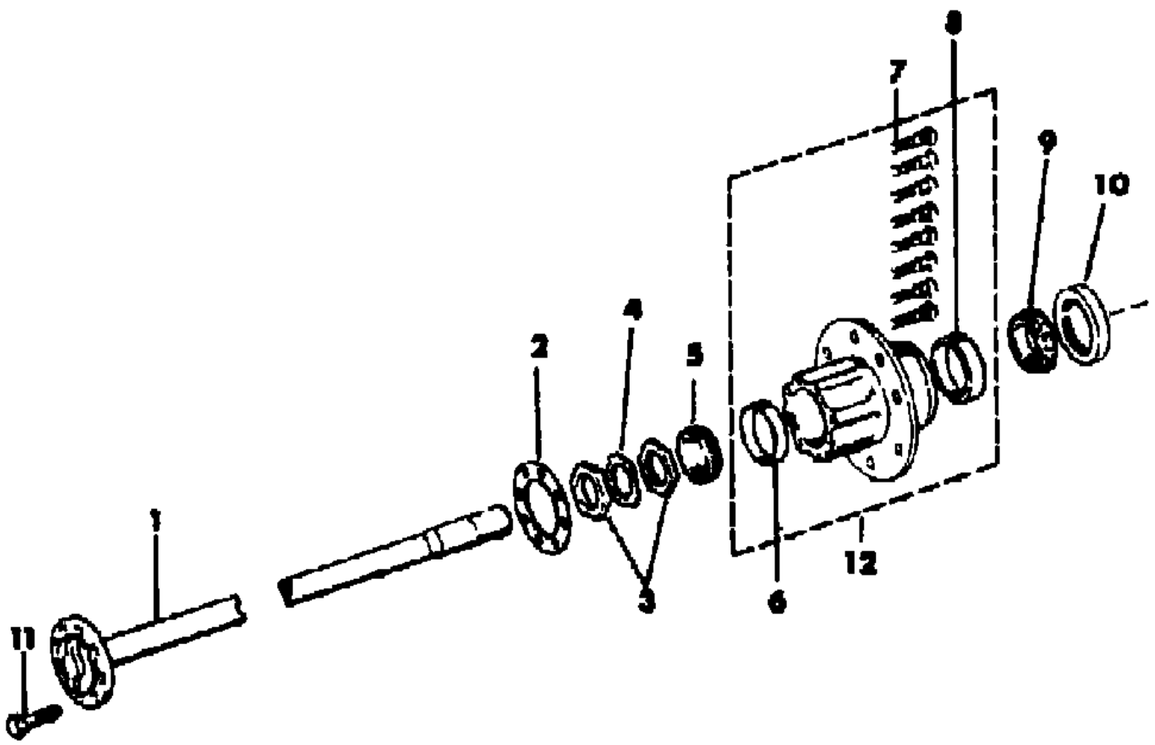

ITEM	PART NUMBER	QTY	BODY	MODEL	DESCRIPTION
1	J813 1932	2			SHAFT, Axle
2	J535 2662	2			GASKET
3	J099 2300	4			NUT
4	J400 4829	2			WASHER
5	J099 2276	2			CONE, Bearing
6	J099 2336	2			CUP, Bearing
7	J812 4958	16			STUD
8	J812 4840	2			CUP, Bearing
9	J535 2661	2			CONE, Bearing
10	J535 2786	2			SEAL
11	J400 6129	16			BOLT
12	J812 4956	2			HUB ASSEMBLY ***

MODEL CODES

16=Cherokee 2 Dr.(1981-83)
17=Cherokee 2 Dr.(1981-83)
73=Cherokee 2WD-2 Dr.(1984-86)
74=Cherokee 2WD-4 Dr.(1984-86)
18=Cherokee 4 Dr.(1981-83)
77=Cherokee 4WD-2 Dr.(1984-86)
78=Cherokee 4WD-4 Dr.(1984-86)
85=CJ-5 (1981-83)
86=CJ-6(1981)
87=CJ-7(1981-86)
88=CJ-8, Scrambler(1981-86)
64=Comanche 2WD-6 Ft. Box(1986)
66=Comanche 2WD-7 Ft. Box(1986)
63=Comanche 4WD-6 Ft. Box(1986)
65=Comanche 4WD-7 Ft. Box(1986)
15=Grand Wagoneer 4 Dr.(1984-86)
25=J-10 Truck 7 Ft. Box(1981-84)
26=J10 Truck 8 Ft. Box(1981-86)
27=J-20 Truck 8 Ft. Box(1981-86)
15=Wagoneer 4 Dr.(1981-83)
75=Wagoneer 4WD-4 Dr.(1984-86)

BODY
CJ=CJ-5, CJ-6, CJ-7, CJ-8, Scrambler(1981-86)
MJ=Comanche Pickup(1986)

STYLES
SJ=Wagoneer(1981-83), Grand Wagoneer(1984-86), Cherokee(1981-83), J-10, J-20(1981-86)
XJ=Wagoneer(1984-86), Cherokee(1984-86)

AR = Use as Required - = Non Illustrated Part P.A.R. = Paint as Required

« RETURN TO GROUP INDEX

GROUP 4 - BRAKES, PARKING

ILLUSTRATION TITLE	GROUP-FIG. NO.
LEVER ASSEMBLY AND CABLES PARKING BRAKE, LEFT HAND DRIVE CJ-5,6,7,8, SCRAMBLER	Fig. 4-100
LEVER ASSEMBLY AND CABLES PARKING BRAKE, RIGHT HAND DRIVE CJ-5,6,7,8, SCRAMBLER	Fig. 4-200
LEVER ASSEMBLY AND CABLES PARKING BRAKE XJ CHEROKEE, XJ WAGONEER	Fig. 4-300
LEVER ASSEMBLY AND CABLES PARKING BRAKE COMANCHE	Fig. 4-400
LEVER ASSEMBLY AND CABLES PARKING BRAKE SJ CHEROKEE, SJ WAGONEER, J10, J20	Fig. 4-500

ILLUSTRATION NOT AVAILABLE AT TIME OF PUBLICATION

LEVER ASSEMBLY AND CABLES PARKING BRAKE, LEFT HAND DRIVE CJ-5,6,7,8, SCRAMBLER
Figure 4-100

81J04 100

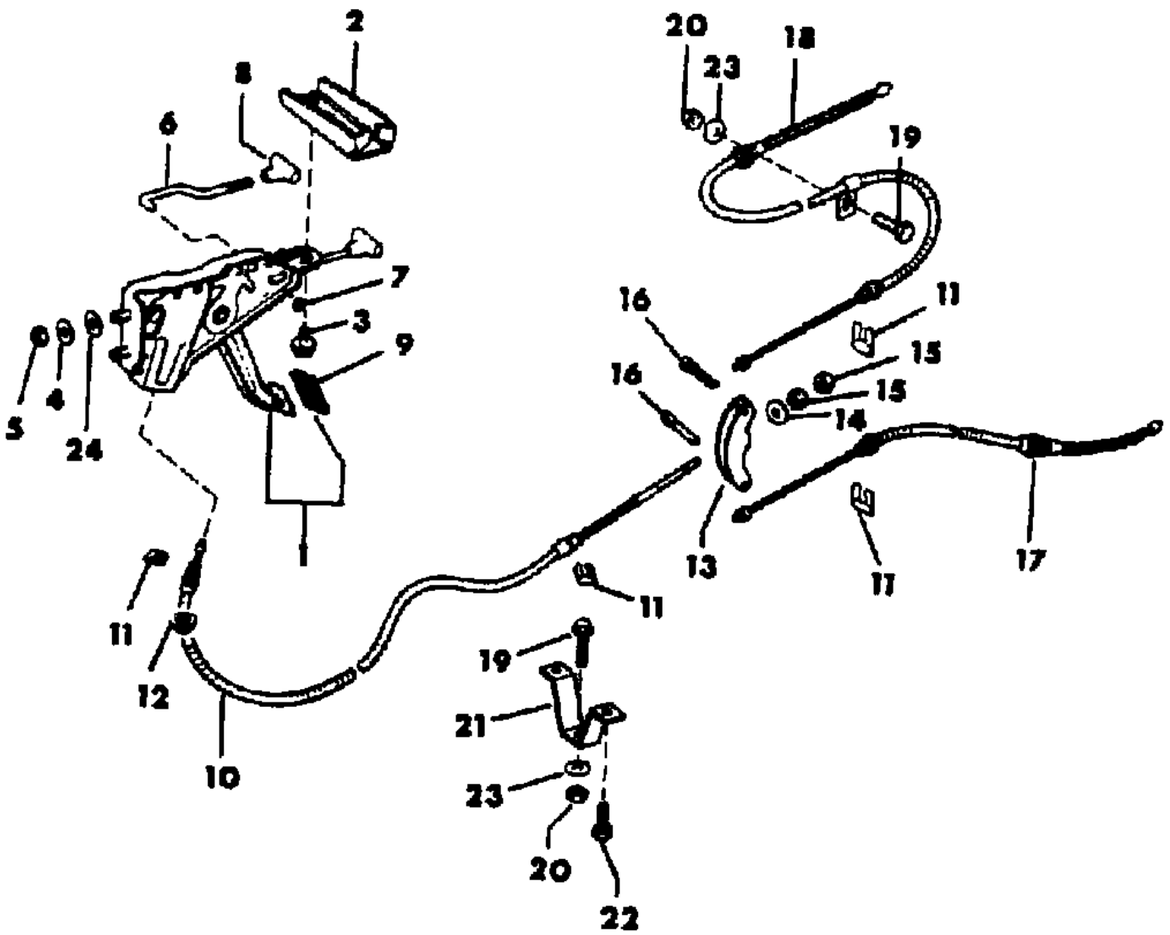

ITEM	PART NUMBER	QTY	BODY	MODEL	DESCRIPTION
1	J535 5477	1			LEVER ASSEMBLY, Brake ***
2	J545 9676	1			BRACKET, Support
3	J098 7145	1			SCREW
4	J012 0393	2			WASHER, Flat
5	J027 1184	2			NUT
6	J812 8786	1			ROD, Release
7	J320 8306	1			CLIP
8	J448 7994	1			HANDLE
9	J322 0433	1			PAD, Pedal
10					CABLE, Brake
	J535 5287	1		85,86	
	J535 3238	1		87	
	J535 5286	1		88	
11	J093 0061	2			CLIP
12	J535 1742	1			GROMMET
13	J322 2572	1			EQUALIZER
14	S044 6363	2			WASHER
15	S012 4920	2			NUT
16	J010 3375	2			PIN, Cotter
17					CABLE, Left Brake
	J323 3903	1		85,86	
	J324 2203	1		87,88	
18	J323 9949	1			CABLE, Right Brake
19	J027 3573	2			BOLT
20	J941 3447	2			NUT
21	J536 3211	1			BRACKET
22	J018 0016	2			BOLT
23	J012 0393	2			WASHER, Flat
24	J400 6826	2			WASHER, Sealing

MODEL CODES

16=Cherokee 2 Dr.(1981-83)
17=Cherokee 2 Dr.(1981-83)
73=Cherokee 2WD-2 Dr.(1984-86)
74=Cherokee 2WD-4 Dr.(1984-86)
18=Cherokee 4 Dr.(1981-83)
77=Cherokee 4WD-2 Dr.(1984-86)
78=Cherokee 4WD-4 Dr.(1984-86)
85=CJ-5 (1981-83)
86=CJ-6(1981)
87=CJ-7(1981-86)
88=CJ-8, Scrambler(1981-86)
64=Comanche 2WD-6 Ft. Box(1986)
66=Comanche 2WD-7 Ft. Box(1986)
63=Comanche 4WD-6 Ft. Box(1986)
65=Comanche 4WD-7 Ft. Box(1986)
15=Grand Wagoneer 4 Dr.(1984-86)
25=J-10 Truck 7 Ft. Box(1981-84)
26=J10 Truck 8 Ft. Box(1981-86)
27=J-20 Truck 8 Ft. Box(1981-86)
15=Wagoneer 4 Dr.(1981-83)
75=Wagoneer 4WD-4 Dr.(1984-86)

BODY
CJ=CJ-5, CJ-6, CJ-7, CJ-8, Scrambler(1981-86)
MJ=Comanche Pickup(1986)

STYLES
SJ=Wagoneer(1981-83), Grand Wagoneer(1984-86), Cherokee(1981-83), J-10, J-20(1981-86)
XJ=Wagoneer(1984-86), Cherokee(1984-86)

AR = Use as Required - = Non Illustrated Part P.A.R. = Paint as Required

« RETURN TO GROUP INDEX

LEVER ASSEMBLY AND CABLES PARKING BRAKE, RIGHT HAND DRIVE CJ-5,6,7,8, SCRAMBLER
Figure 4-200

81J04 200

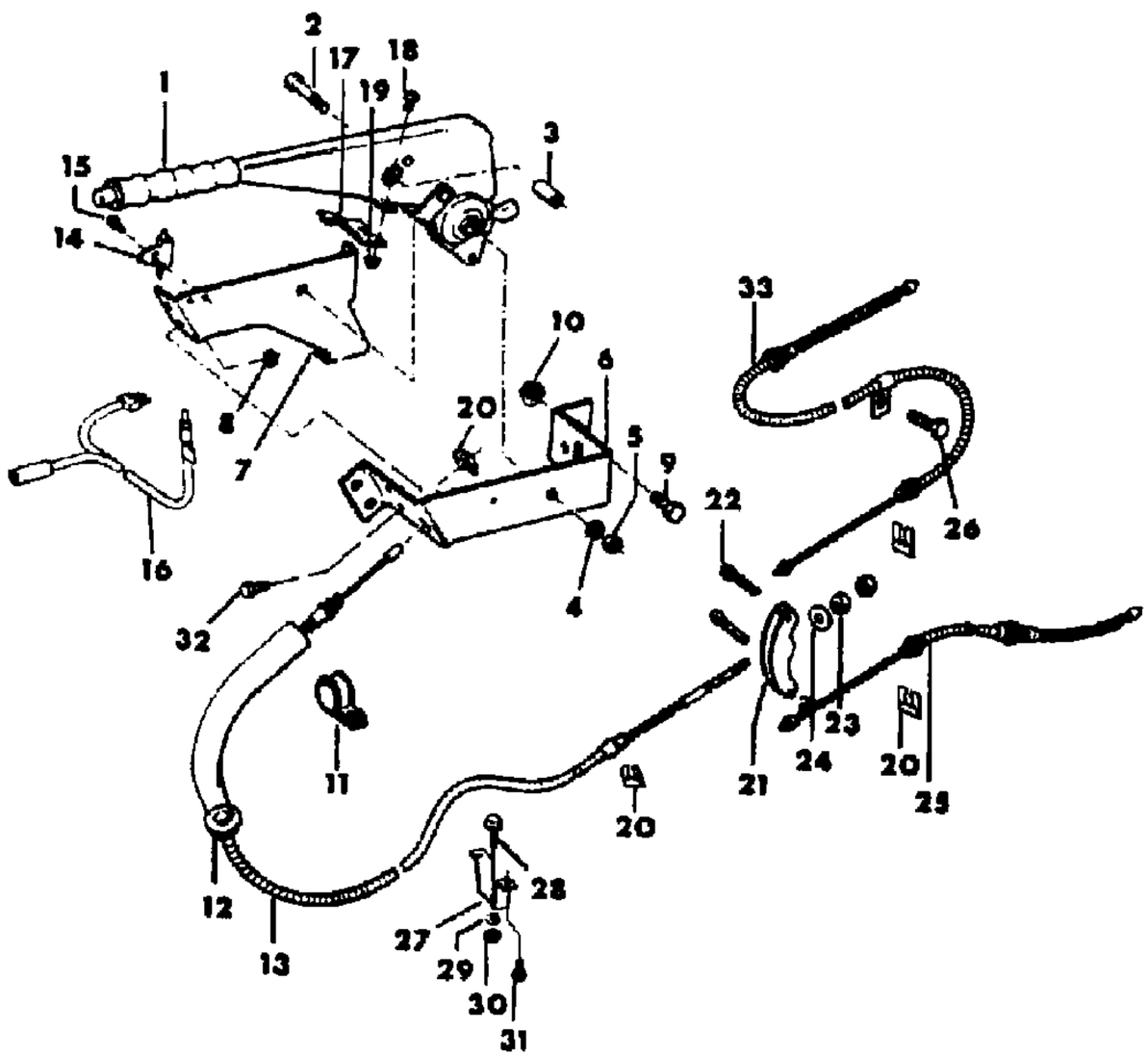

ITEM	PART NUMBER	QTY	BODY	MODEL	DESCRIPTION
1	J536 1595	1			LEVER ASSEMBLY, Brake ***
2	J420 0312	1			BOLT
3	J420 0315	1			SPACER
4	J420 0313	1			WASHER, Lock
5	J420 0314	1			NUT
6	J536 1605	1			BRACKET, Left
7	J536 1604	1			BRACKET, Right
8	J941 6918	3			NUT
9	J018 0120	3			BOLT
10	J941 1507	3			NUT
11	J014 0786	1			CLIP
12	J535 1742	1			GROMMET
13					CABLE, Brake
	J536 3343	1		85	
	J536 3221	1		86,88	
	J536 3342	1		87	
14	J323 2194	1			SWITCH
15	J400 5559	1			SCREW
16	J575 2578	1			WIRE ASSEMBLY ***
17	J536 1935	1			CONTACT ***
18	J400 3924	1			BOLT
19	J027 1163	1			NUT
20	J093 0061	4			CLIP
21	J332 2572	1			EQUALIZER
22	S011 9120	2			PIN, Cotter
23	S012 4920	2			NUT
24	S044 6363	1			WASHER
25					CABLE, Left Brake
	J323 3903	1		85,86	
	J324 2203	1		87,88	
26	J027 3573	1			BOLT
27	J536 3211	1			BRACKET
28	J027 3573	1			BOLT
29	J012 0393	1			WASHER
30	J941 3447	1			NUT
31	J018 0016	2			SCREW
32	J018 0020	3			BOLT
33	J323 9949	1			CABLE, Right Brake

MODEL CODES

16=Cherokee 2 Dr.(1981-83)
17=Cherokee 2 Dr.(1981-83)
73=Cherokee 2WD-2 Dr.(1984-86)
74=Cherokee 2WD-4 Dr.(1984-86)
18=Cherokee 4 Dr.(1981-83)
77=Cherokee 4WD-2 Dr.(1984-86)
78=Cherokee 4WD-4 Dr.(1984-86)
85=CJ-5 (1981-83)
86=CJ-6(1981)
87=CJ-7(1981-86)
88=CJ-8, Scrambler(1981-86)
64=Comanche 2WD-6 Ft. Box(1986)
66=Comanche 2WD-7 Ft. Box(1986)
63=Comanche 4WD-6 Ft. Box(1986)
65=Comanche 4WD-7 Ft. Box(1986)
15=Grand Wagoneer 4 Dr.(1984-86)
25=J-10 Truck 7 Ft. Box(1981-84)
26=J10 Truck 8 Ft. Box(1981-86)
27=J-20 Truck 8 Ft. Box(1981-86)
15=Wagoneer 4 Dr.(1981-83)
75=Wagoneer 4WD-4 Dr.(1984-86)

BODY
CJ=CJ-5, CJ-6, CJ-7, CJ-8, Scrambler(1981-86)
MJ=Comanche Pickup(1986)

STYLES
SJ=Wagoneer(1981-83), Grand Wagoneer(1984-86), Cherokee(1981-83), J-10, J-20(1981-86)
XJ=Wagoneer(1984-86), Cherokee(1984-86)

AR = Use as Required - = Non Illustrated Part P.A.R. = Paint as Required

« RETURN TO GROUP INDEX

LEVER ASSEMBLY AND CABLES PARKING BRAKE XJ CHEROKEE, XJ WAGONEER
Figure 4-300

81J04 300

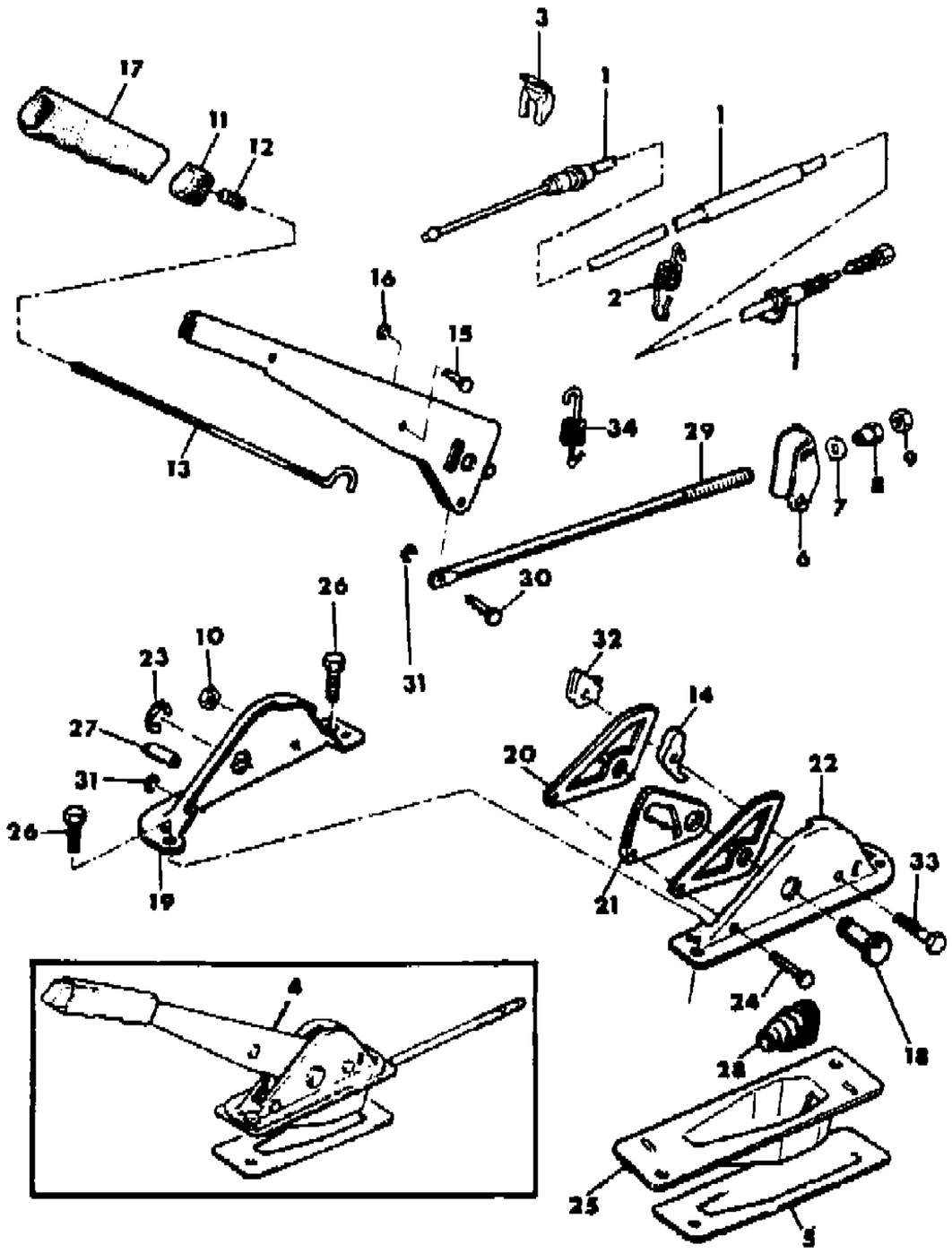

ITEM	PART NUMBER	QTY	BODY	MODEL	DESCRIPTION
1	5200 1153	2			CABLE, Brake
2	5200 1156	2			SPRING
3	J321 7581	2			CLIP
4					LEVER ASSEMBLY, Brake ***
	T068 6078	1			1984-85
	J067 8723	1			1986
5	3200 0744	1			SEAL
6	5200 1154	1			LINK, Cable
7	J400 3807	1			WASHER
8	5200 1157	1			NUT
9	1150 0749	1			NUT
10	T303 3005	1			NUT
11	J066 2741	1			BUTTON, Release
12	J066 2781	1			SPRING
13	J066 2784	1			ROD
14	J066 2770	1			PAWL, Locking
15	J305 0033	1			PIN
16	J306 6150	1			CLIP
17	J066 2742	1			HANDLE
18	J305 0070	1			SHAFT
19	J066 2783	1			HOUSING, Right Half
20	J069 9064	2			SPACER
21	J066 2771	1			SECTOR, Locking ***
22	J066 2782	1			HOUSING, Left Half
23	J306 6162	1			CLIP
24	J305 0094	1			PIN
25	5200 1155	1			COVER, Housing
26	3420 1756	2			BOLT
27	J503 5073	1			PIN
28	J059 1208	1			BOOT ***
29	J059 1241	1			ROD, Adjusting
30	J305 0069	1			PIN
31	J306 6151	2			CLIP
32	J065 2153	1			SWITCH, Brake Warning Lamp
33	T300 1658	1			SCREW
34	5200 1156	2			SPRING

MODEL CODES

16=Cherokee 2 Dr.(1981-83)
17=Cherokee 2 Dr.(1981-83)
73=Cherokee 2WD-2 Dr.(1984-86)
74=Cherokee 2WD-4 Dr.(1984-86)
18=Cherokee 4 Dr.(1981-83)
77=Cherokee 4WD-2 Dr.(1984-86)
78=Cherokee 4WD-4 Dr.(1984-86)
85=CJ-5 (1981-83)
86=CJ-6(1981)
87=CJ-7(1981-86)
88=CJ-8, Scrambler(1981-86)
64=Comanche 2WD-6 Ft. Box(1986)
66=Comanche 2WD-7 Ft. Box(1986)
63=Comanche 4WD-6 Ft. Box(1986)
65=Comanche 4WD-7 Ft. Box(1986)
15=Grand Wagoneer 4 Dr.(1984-86)
25=J-10 Truck 7 Ft. Box(1981-84)
26=J10 Truck 8 Ft. Box(1981-86)
27=J-20 Truck 8 Ft. Box(1981-86)
15=Wagoneer 4 Dr.(1981-83)
75=Wagoneer 4WD-4 Dr.(1984-86)

BODY
CJ=CJ-5, CJ-6, CJ-7, CJ-8, Scrambler(1981-86)
MJ=Comanche Pickup(1986)

STYLES
SJ=Wagoneer(1981-83), Grand Wagoneer(1984-86), Cherokee(1981-83), J-10, J-20(1981-86)
XJ=Wagoneer(1984-86), Cherokee(1984-86)

AR = Use as Required - = Non Illustrated Part P.A.R. = Paint as Required

« RETURN TO GROUP INDEX

LEVER ASSEMBLY AND CABLES PARKING BRAKE COMANCHE
Figure 4-400

81J04 400

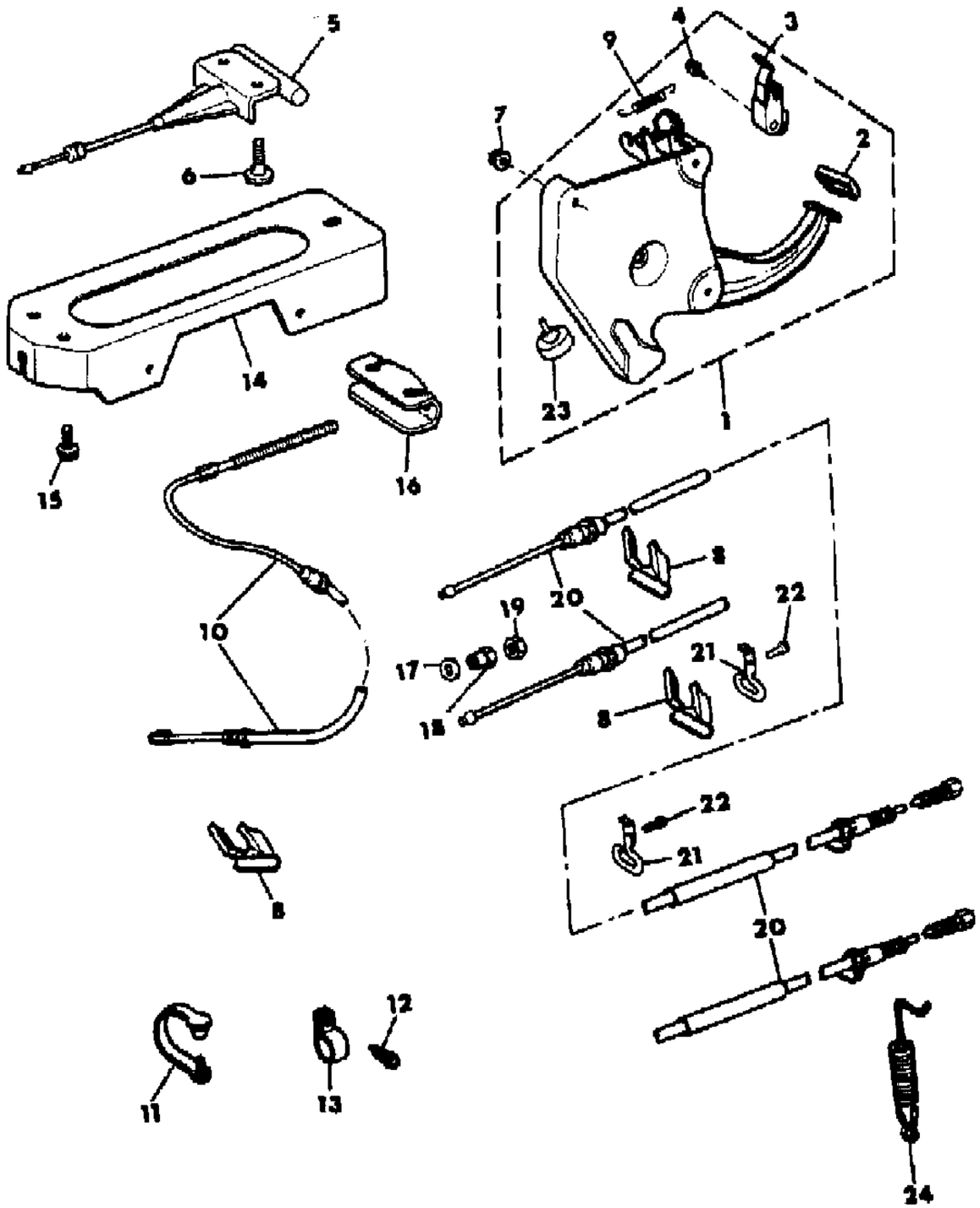

ITEM	PART NUMBER	QTY	BODY	MODEL	DESCRIPTION
1	5200 0803	1			LEVER ASSEMBLY, Brake ***
2	8350 2639	1			PAD, Pedal
3	5600 1933	1			SWITCH, Brake Warning Lamp
4	J941 6223	1			SCREW
5	5200 0861	1			CABLE, Release
6	3420 1473	2			SCREW
7	1150 2811	2			NUT
8	J321 7581	4			CLIP
9	8350 4860	1			SPRING
10	5200 0802	1			CABLE, Brake
11	J400 0306	1			STRAP
12	J400 1042	2			SCREW
13	J012 0524	2			CLIP
14	5200 0863	1			BRACKET, Cable Support
15	3420 1991	1			BOLT
16	5200 1154	1			EQUALIZER
17	J400 3807	1			WASHER
18	5200 1157	1			NUT
19	1150 0749	1			NUT
20	5200 0865	2			CABLE, Brake
21	5200 3547	2			CLIP
22	3420 1193	2			BOLT
23	8350 5579	1			BUMPER
24	5200 1156	1			SPRING

MODEL CODES

16=Cherokee 2 Dr.(1981-83)
17=Cherokee 2 Dr.(1981-83)
73=Cherokee 2WD-2 Dr.(1984-86)
74=Cherokee 2WD-4 Dr.(1984-86)
18=Cherokee 4 Dr.(1981-83)
77=Cherokee 4WD-2 Dr.(1984-86)
78=Cherokee 4WD-4 Dr.(1984-86)
85=CJ-5 (1981-83)
86=CJ-6(1981)
87=CJ-7(1981-86)
88=CJ-8, Scrambler(1981-86)
64=Comanche 2WD-6 Ft. Box(1986)
66=Comanche 2WD-7 Ft. Box(1986)
63=Comanche 4WD-6 Ft. Box(1986)
65=Comanche 4WD-7 Ft. Box(1986)
15=Grand Wagoneer 4 Dr.(1984-86)
25=J-10 Truck 7 Ft. Box(1981-84)
26=J10 Truck 8 Ft. Box(1981-86)
27=J-20 Truck 8 Ft. Box(1981-86)
15=Wagoneer 4 Dr.(1981-83)
75=Wagoneer 4WD-4 Dr.(1984-86)

BODY
CJ=CJ-5, CJ-6, CJ-7, CJ-8, Scrambler(1981-86)
MJ=Comanche Pickup(1986)

STYLES
SJ=Wagoneer(1981-83), Grand Wagoneer(1984-86), Cherokee(1981-83), J-10, J-20(1981-86)
XJ=Wagoneer(1984-86), Cherokee(1984-86)

AR = Use as Required - = Non Illustrated Part P.A.R. = Paint as Required

« RETURN TO GROUP INDEX

LEVER ASSEMBLY AND CABLES PARKING BRAKE SJ CHEROKEE, SJ WAGONEER, J10, J20
Figure 4-500

81J04 500

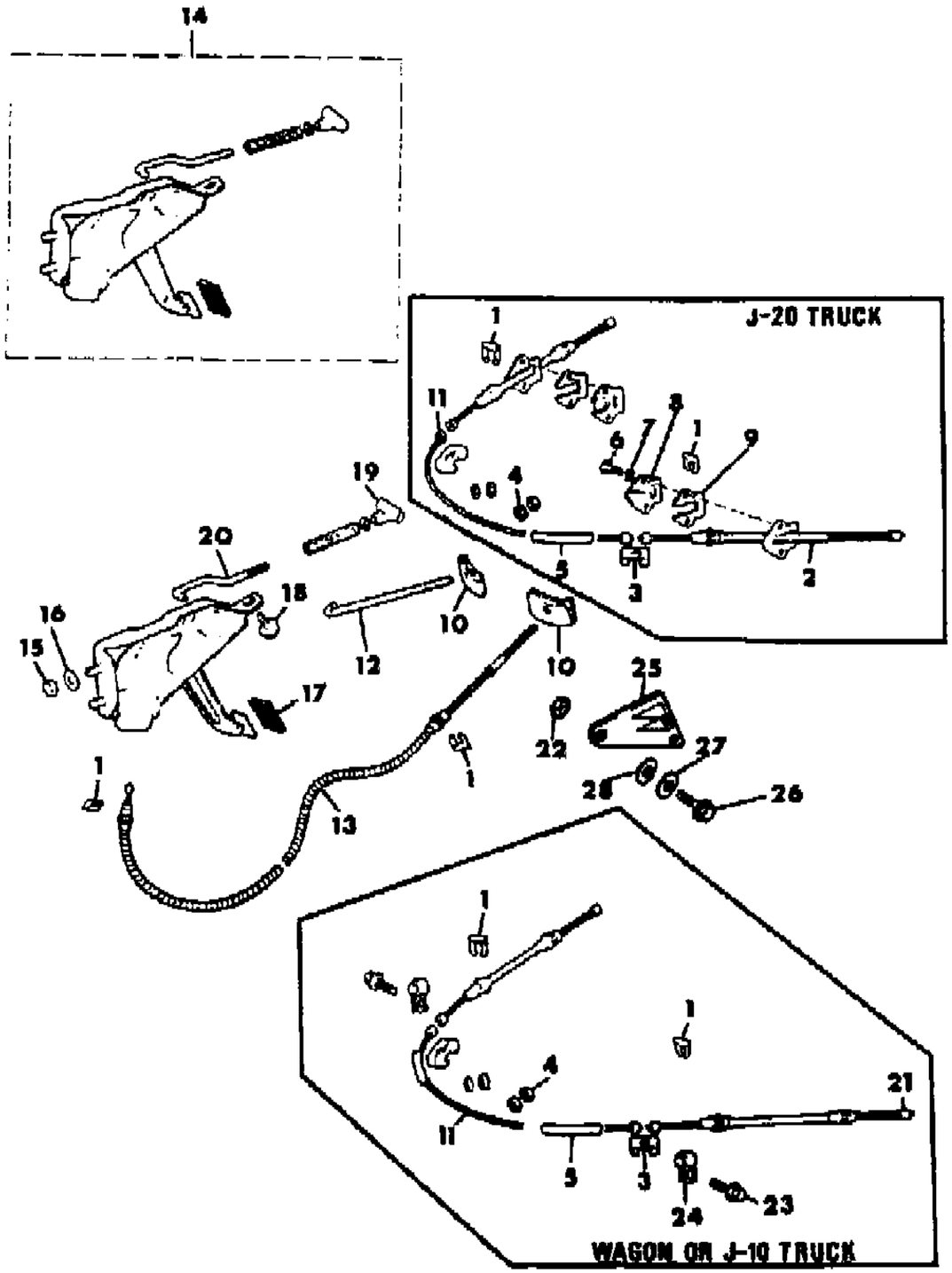

ITEM	PART NUMBER	QTY	BODY	MODEL	DESCRIPTION
1	J093 0061	4			CLIP
2	J536 2136	1		27	CABLE, Rear Brake
3	J535 1675	2			CLIP
4	J012 0368	4			NUT
5	J536 1320	2			SLEEVE
6	J018 0077	4			BOLT
7	J012 0214	4			WASHER
8	J535 2785	2			CLAMP
9	J535 2784	2			GASKET
10	J535 1663	2			EQUALIZER
11					CABLE, Intermediate Brake
	J536 1279	1		15,16,1	With Four Speed Manual Transmission
	J536 1279	1		25,26	With Four Speed Manual Transmission
	J536 2868	1		27	With Four Speed Manual Transmission
	J536 3681	1			With Five Speed Manual Transmission
	J536 1280	1			With Six Cylinder Engine and Automatic Transmission
	J536 1279	1			With Eight Cylinder Engine and Automatic Transmission
12	J536 1278	1			ROD
13					CABLE, Front Brake
					Left Hand Drive
	J537 0041	1		15,16,1	With Four Speed Transmission
	J537 0041	1		25,26	With Four Speed Transmission
	J537 0042	1		27	With Four Speed Transmission
	J537 0042	1			With Five Speed Transmission
	J537 0042	1			With Six Cylinder Engine and Automatic Transmission
	J537 0041	1			With Eight Cylinder Engine and Automatic Transmission
					Right Hand Drive
	J537 0042	1			1982: Six Cylinder ENgine
	J536 1029	1			1983-86: Six Cylinder Engine
	J537 0041	1			1982-86: Eight Cylinder Engine
14	J536 2139	1			LEVER ASSEMBLY, Brake ***
15	J027 1184	2			NUT
16	J012 0393	2			WASHER
17	J322 0433	1			PAD, Pedal
18	J098 7145	1			BOLT
19	J448 7994	1			HANDLE
20	J448 7993	1			ROD
21					CABLE, Rear Brake
	J536 2132	1		15,16,1	

MODEL CODES

16=Cherokee 2 Dr.(1981-83)
17=Cherokee 2 Dr.(1981-83)
73=Cherokee 2WD-2 Dr.(1984-86)
74=Cherokee 2WD-4 Dr.(1984-86)
18=Cherokee 4 Dr.(1981-83)
77=Cherokee 4WD-2 Dr.(1984-86)
78=Cherokee 4WD-4 Dr.(1984-86)
85=CJ-5 (1981-83)
86=CJ-6(1981)
87=CJ-7(1981-86)
88=CJ-8, Scrambler(1981-86)
64=Comanche 2WD-6 Ft. Box(1986)
66=Comanche 2WD-7 Ft. Box(1986)
63=Comanche 4WD-6 Ft. Box(1986)
65=Comanche 4WD-7 Ft. Box(1986)
15=Grand Wagoneer 4 Dr.(1984-86)
25=J-10 Truck 7 Ft. Box(1981-84)
26=J10 Truck 8 Ft. Box(1981-86)
27=J-20 Truck 8 Ft. Box(1981-86)
15=Wagoneer 4 Dr.(1981-83)
75=Wagoneer 4WD-4 Dr.(1984-86)

BODY
CJ=CJ-5, CJ-6, CJ-7, CJ-8, Scrambler(1981-86)
MJ=Comanche Pickup(1986)

STYLES
SJ=Wagoneer(1981-83), Grand Wagoneer(1984-86), Cherokee(1981-83), J-10, J-20(1981-86)
XJ=Wagoneer(1984-86), Cherokee(1984-86)

AR = Use as Required - = Non Illustrated Part P.A.R. = Paint as Required

LEVER ASSEMBLY AND CABLES PARKING BRAKE SJ CHEROKEE, SJ WAGONEER, J10, J20
Figure 4-500

81J04 500

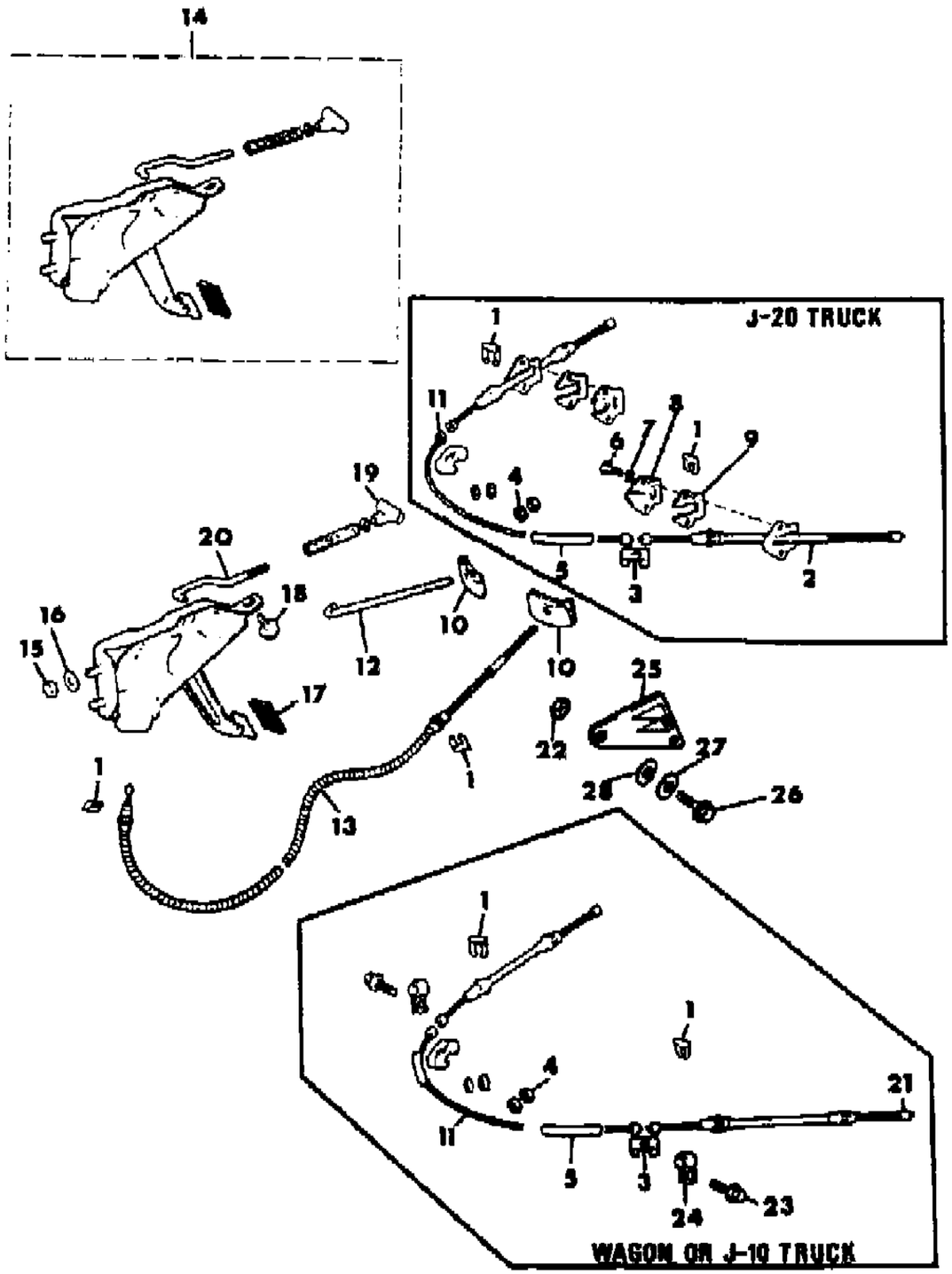

ITEM	PART NUMBER	QTY	BODY	MODEL	DESCRIPTION
	J536 2131	1		25	
	J536 2130	1		26	
22	J012 0369	2			NUT
23	J400 4626	2			BOLT
24	J012 7879	2			CLIP
25	J536 3793	1			BRACKET
26	J018 1652	2			BOLT
27	J012 0382	2			WASHER, Lock
28	J013 8489	2			WASHER, Star

MODEL CODES

16=Cherokee 2 Dr.(1981-83)
17=Cherokee 2 Dr.(1981-83)
73=Cherokee 2WD-2 Dr.(1984-86)
74=Cherokee 2WD-4 Dr.(1984-86)
18=Cherokee 4 Dr.(1981-83)
77=Cherokee 4WD-2 Dr.(1984-86)
78=Cherokee 4WD-4 Dr.(1984-86)
85=CJ-5 (1981-83)
86=CJ-6(1981)
87=CJ-7(1981-86)
88=CJ-8, Scrambler(1981-86)
64=Comanche 2WD-6 Ft. Box(1986)
66=Comanche 2WD-7 Ft. Box(1986)
63=Comanche 4WD-6 Ft. Box(1986)
65=Comanche 4WD-7 Ft. Box(1986)
15=Grand Wagoneer 4 Dr.(1984-86)
25=J-10 Truck 7 Ft. Box(1981-84)
26=J10 Truck 8 Ft. Box(1981-86)
27=J-20 Truck 8 Ft. Box(1981-86)
15=Wagoneer 4 Dr.(1981-83)
75=Wagoneer 4WD-4 Dr.(1984-86)

BODY
CJ=CJ-5, CJ-6, CJ-7, CJ-8, Scrambler(1981-86)
MJ=Comanche Pickup(1986)

STYLES
SJ=Wagoneer(1981-83), Grand Wagoneer(1984-86), Cherokee(1981-83), J-10, J-20(1981-86)
XJ=Wagoneer(1984-86), Cherokee(1984-86)

AR = Use as Required - = Non Illustrated Part P.A.R. = Paint as Required

ILLUSTRATION NOT AVAILABLE AT TIME OF PUBLICATION

GROUP 5 - BRAKE, SERVICE

ILLUSTRATION TITLE	GROUP-FIG. NO.
CJ	
PEDAL, BRAKE CJ-5,6,7,8, SCRAMBLER	Fig. 5-100
MASTER CYLINDER WITHOUT POWER BRAKES CJ-5,6,7,8, SCRAMBLER	Fig. 5-200
MASTER CYLINDER AND BOOSTER WITH POWER BRAKES CJ-5,6,7,8, SCRAMBLER	Fig. 5-300
LINES AND HOSES, BRAKE CJ-5,6,7,8, SCRAMBLER	Fig. 5-400
BRAKES, FRONT 1981 CJ-5,6,7,8, SCRAMBLER	Fig. 5-500
BRAKES, FRONT 1982-86 CJ-5,6,7,8, SCRAMBLER	Fig. 5-600
BRAKES, REAR AMC LARGE AXLE CJ-5,6,7,8, SCRAMBLER	Fig. 5-700
BRAKES, REAR DANA MODEL 44 AXLE CJ-7,8, SCRAMBLER	Fig. 5-800
DRUM, BRAKE CJ-5,6,7,8, SCRAMBLER	Fig. 5-900
XJ, MJ	
PEDAL, BRAKE XJ CHEROKEE, XJ WAGONEER COMANCHE	Fig. 5-1000
VACUUM PUMP POWER BRAKES 2.1L DIESEL	Fig. 5-1100
BOOSTER AND MASTER CYLINDER U.S. AND CANADA XJ CHEROKEE, XJ WAGONEER, COMANCHE	Fig. 5-1200
BOOSTER AND MASTER CYLINDER EXPORT XJ CHEROKEE, XJ WAGONEER, COMANCHE	Fig. 5-1300
LINES AND HOSES, BRAKE U. S. AND CANADA XJ CHEROKEE, XJ WAGONEER, COMANCHE	Fig. 5-1400
HEIGHT SENSING VALVE COMANCHE	Fig. 5-1500
LINES AND HOSES, BRAKE EXPORT XJ CHEROKEE, XJ WAGONEER	Fig. 5-1600
BRAKES, FRONT XJ CHEROKEE, XJ WAGONEER COMANCHE	Fig. 5-1700
BRAKES, REAR AMC OR DANA MODEL 35 AXLE XJ CHEROKEE, XJ WAGONEER, COMANCHE	Fig. 5-1800
BRAKES, REAR AMC LARGE AXLE COMANCHE	Fig. 5-1900
SJ	
PEDAL, BRAKE SJ CHEROKEE, SJ WAGONEER J10, J20	Fig. 5-2000
BOOSTER AND MASTER CYLINDER SJ CHEROKEE, SJ WAGONEER J10, J20	Fig. 5-2100
LINES AND HOSES, BRAKE SJ CHEROKEE, SJ WAGONEER J10, J20	Fig. 5-2200
BRAKES, FRONT SJ CHEROKEE, SJ WAGONEER J10, J20	Fig. 5-2300
BRAKES, REAR AMC LARGE AXLE OR DANA MODEL 44 SJ CHEROKEE, SJ WAGONEER, J10	Fig. 5-2400
BRAKES, REAR DANA MODEL 60 AXLE J20	Fig. 5-2500
BRAKES, REAR DANA MODEL 60 AXLE J20	Fig. 5-2600

PEDAL, BRAKE CJ-5,6,7,8, SCRAMBLER
Figure 5-100

81J05 100

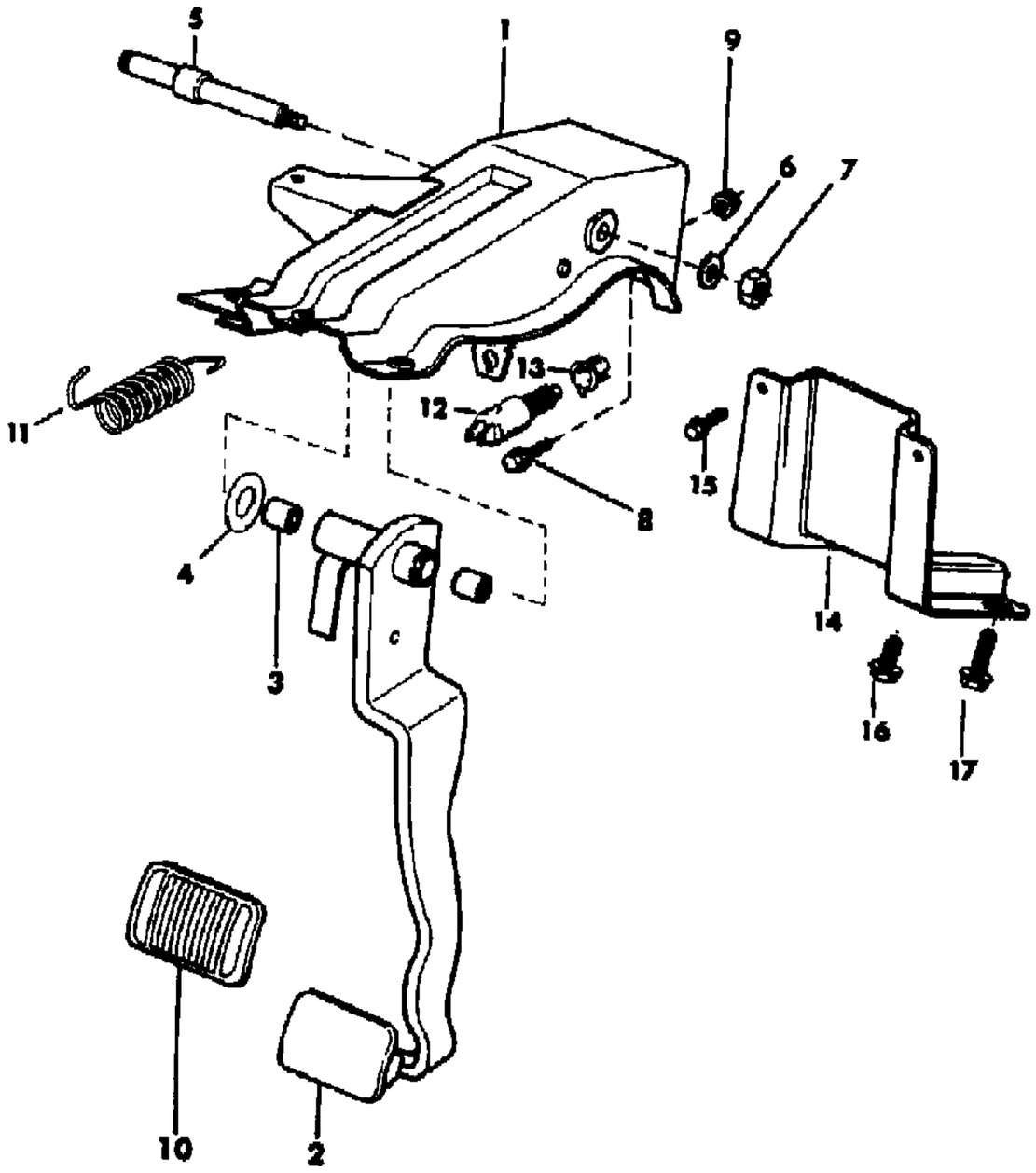

ITEM	PART NUMBER	QTY	BODY	MODEL	DESCRIPTION
1					BRACKET, Pedal
	J813 0726	1			With Manual Transmission
	J813 0727	1			With Automatic Transmission
	J575 2605	1			EXPORT, Right Hand Drive
2					PEDAL, Brake
					1981
	J535 5301	1			With Manual Transmission, Without Power Brakes
	J535 5302	1			With Manual Transmission, Power Brakes
	J535 7370	1			With Automatic Transmission, Without Power Brakes
	J535 5303	1			With Automatic Transmission, Power Brakes
	J536 1851	1			EXPORT, With Right Hand Drive, Manual Transmission, Without Power Brakes
	J536 1856	1			EXPORT, With Right Hand Drive, Manual Transmission, Power Brakes
	J536 1854	1			EXPORT, With Right Hand Drive, Automatic Transmission, Without Power Brakes
	J536 1858	1			EXPORT, With Right Hand Drive, Automatic Transmission, Power Brakes
					1982-86
	J536 3509	1			With Manual Transmission, Without Power Brakes
	J536 3520	1			With Manual Transmission, Power Brakes, Without Four Cylinder AMC Engine
	J536 4831	1			With Manual Transmission, Power Brakes, Four Cylinder AMC Engine
	J535 3514	1			With Automatic Transmission, Without Power Brakes
	J536 3519	1			With Automatic Transmission, Power Brakes
	J536 3515	1			EXPORT, With Right Hand Drive, Manual Transmission Without Power Brakes
	J536 3517	1			EXPORT, With Right Hand Drive, Manual Transmission, Power Brakes
	J536 3516	1			EXPORT, With Right Hand Drive, Automatic Transmission, Without Power Brakes
	J536 3518	1			EXPORT, With Right Hand Drive, Automatic Transmission, Power Brakes
3	J094 6177	2			BUSHING
4	J535 1844	1			WASHER, Spring
5					SHAFT, Brake Pedal
	J535 9834	1			With Manual Transmission
	J535 1803	1			With Automatic Transmission

MODEL CODES

16=Cherokee 2 Dr.(1981-83)	78=Cherokee 4WD-4 Dr.(1984-86)	64=Comanche 2WD-6 Ft. Box(1986)	25=J-10 Truck 7 Ft. Box(1981-84)
17=Cherokee 2 Dr.(1981-83)	85=CJ-5 (1981-83)	66=Comanche 2WD-7 Ft. Box(1986)	26=J10 Truck 8 Ft. Box(1981-86)
73=Cherokee 2WD-2 Dr.(1984-86)	86=CJ-6(1981)	63=Comanche 4WD-6 Ft. Box(1986)	27=J-20 Truck 8 Ft. Box(1981-86)
74=Cherokee 2WD-4 Dr.(1984-86)	87=CJ-7(1981-86)	65=Comanche 4WD-7 Ft. Box(1986)	15=Wagoneer 4 Dr.(1981-83)
18=Cherokee 4 Dr.(1981-83)	88=CJ-8, Scrambler(1981-86)	15=Grand Wagoneer 4 Dr.(1984-86)	75=Wagoneer 4WD-4 Dr.(1984-86)
77=Cherokee 4WD-2 Dr.(1984-86)			

BODY
CJ=CJ-5, CJ-6, CJ-7, CJ-8, Scrambler(1981-86)
MJ=Comanche Pickup(1986)

STYLES
SJ=Wagoneer(1981-83), Grand Wagoneer(1984-86), Cherokee(1981-83), J-10, J-20(1981-86)
XJ=Wagoneer(1984-86), Cherokee(1984-86)

AR = Use as Required - = Non Illustrated Part P.A.R. = Paint as Required

PEDAL, BRAKE CJ-5,6,7,8, SCRAMBLER
Figure 5-100

81J05 100

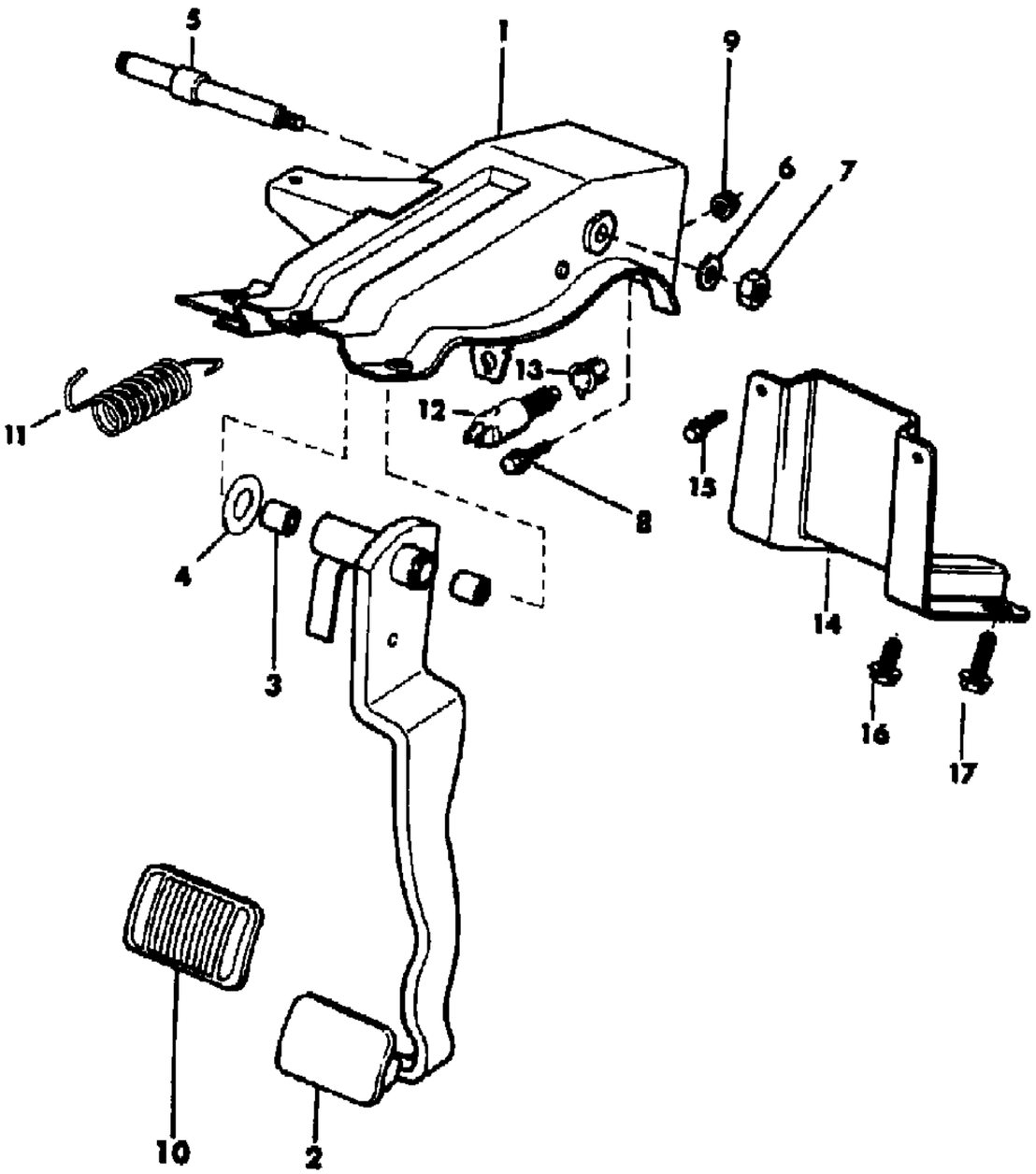

ITEM	PART NUMBER	QTY	BODY	MODEL	DESCRIPTION
	J535 1805	1			1981: EXPORT, With Right Hand Drive, Manual Transmission
	J535 9834	1			1982-86: EXPORT, With Right Hand Drive, Manual Transmission
6	J012 0396	1			WASHER
7	J400 4311	1			NUT
8	J400 6909	2			BOLT
9	J400 3909	2			NUT
10					PAD, Pedal
					With Manual Transmission
	J094 8758	1			1981
	J536 3508	1			1982-86
					With Automatic Transmission
	J536 1261	1			1981
	J536 3521	1			1982-86
11	J535 1050	1			SPRING
12	J535 2620	1			SWITCH, Brake Light
13	J535 2622	1			RETAINER
14	J545 3933	1			BRACKET
15	J400 4991	2			BOLT
16	J400 6909	1			BOLT
17	J018 0125	2			BOLT

MODEL CODES

16=Cherokee 2 Dr.(1981-83)
17=Cherokee 2 Dr.(1981-83)
73=Cherokee 2WD-2 Dr.(1984-86)
74=Cherokee 2WD-4 Dr.(1984-86)
18=Cherokee 4 Dr.(1981-83)
77=Cherokee 4WD-2 Dr.(1984-86)
78=Cherokee 4WD-4 Dr.(1984-86)
85=CJ-5 (1981-83)
86=CJ-6(1981)
87=CJ-7(1981-86)
88=CJ-8, Scrambler(1981-86)
64=Comanche 2WD-6 Ft. Box(1986)
66=Comanche 2WD-7 Ft. Box(1986)
63=Comanche 4WD-6 Ft. Box(1986)
65=Comanche 4WD-7 Ft. Box(1986)
15=Grand Wagoneer 4 Dr.(1984-86)
25=J-10 Truck 7 Ft. Box(1981-84)
26=J10 Truck 8 Ft. Box(1981-86)
27=J-20 Truck 8 Ft. Box(1981-86)
15=Wagoneer 4 Dr.(1981-83)
75=Wagoneer 4WD-4 Dr.(1984-86)

BODY
CJ=CJ-5, CJ-6, CJ-7, CJ-8, Scrambler(1981-86)
MJ=Comanche Pickup(1986)

STYLES
SJ=Wagoneer(1981-83), Grand Wagoneer(1984-86), Cherokee(1981-83), J-10, J-20(1981-86)
XJ=Wagoneer(1984-86), Cherokee(1984-86)

AR = Use as Required - = Non Illustrated Part P.A.R. = Paint as Required

« RETURN TO GROUP INDEX

MASTER CYLINDER WITHOUT POWER BRAKES CJ-5,6,7,8, SCRAMBLER
Figure 5-200

81J05 200

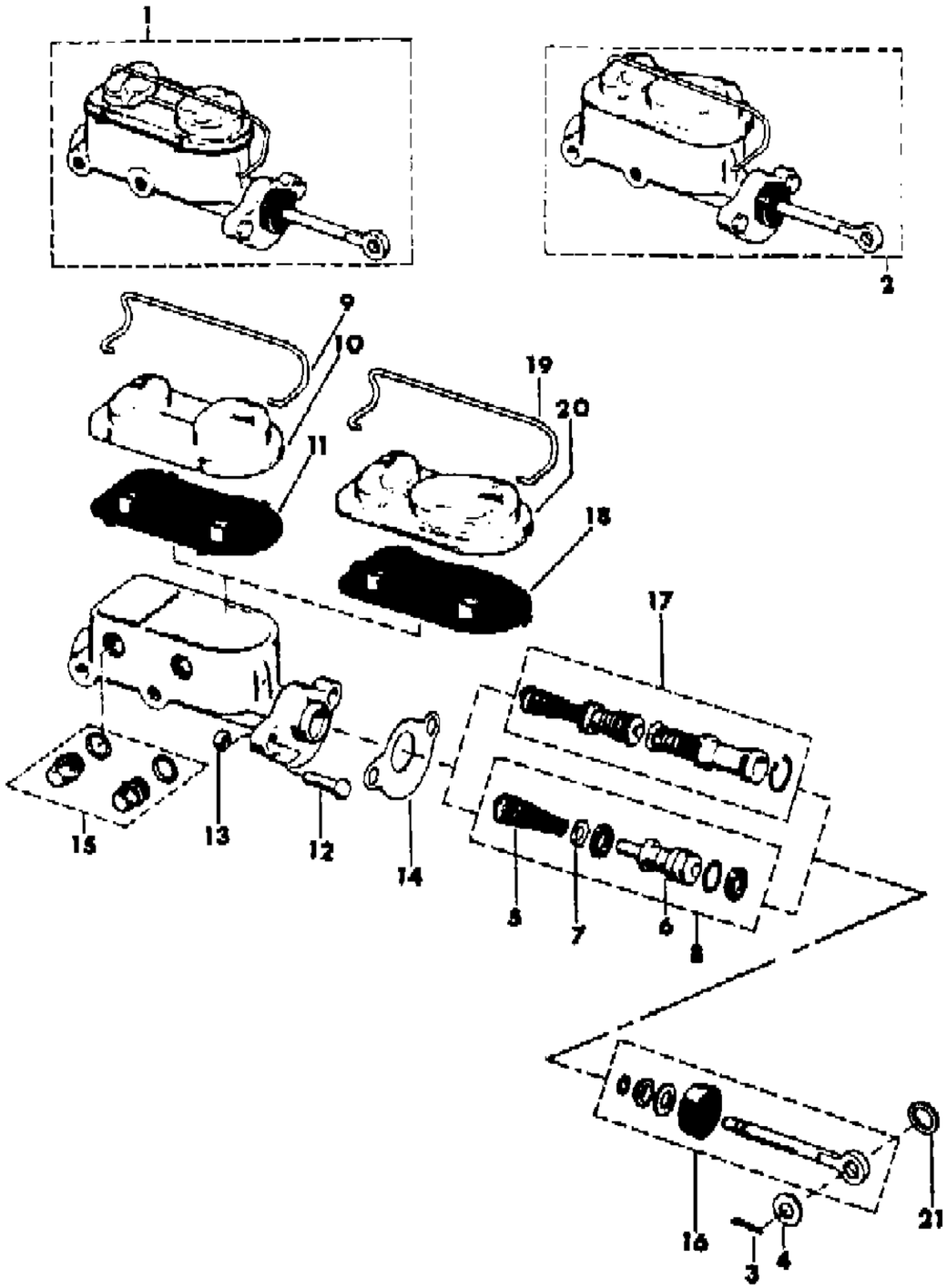

ITEM	PART NUMBER	QTY	BODY	MODEL	DESCRIPTION
1					CYLINDER, Brake Master
	J535 9552	1			1981
	J535 9745	1			1981: EXPORT, Economic Commission of Europe
	J813 4270	1			1982-83
	J536 3535	1			1982-83: EXPORT, Economic Commission of Europe, Australian Design Rules
2					CYLINDER, Brake Master
	J536 4779	1			1983-86
	J536 5051	1			1983-86: EXPORT, Economic Commission of Europe, Australian Design Rules
3	J012 1224	1			PIN, Cotter
4	J012 0396	1			WASHER, Flat
5					SPRING
	J812 8263	1			1981
6					PISTON
	J813 0063	1			1981
7					RETAINER
	J813 0062	1			1981
8					REPAIR PACKAGE
	J813 2592	1			1981
9					RETAINER, Used With Item No. 1
	J812 8261	1			1981
	J813 3918	1			1982-83
10					COVER, Used With Item No. 1
	J812 8259	1			1981
	J813 3919	1			1982-83
11					GASKET, Used With Item No. 1
	J812 8260	1			1981
	J813 3920	1			1982-83
12	J018 0125	2			BOLT
13	J400 3909	2			NUT
14	5200 2597	1			GASKET
15	8350 0142	1			GLASS, Sight, EXPORT
16					PUSH ROD PACKAGE ***
	J813 2593	1			1981-83: Used with Item No. 1
	8350 0906	1			1983-86: Used With Item No. 2
	J813 2593	1			1983-86: EXPORT, Economic Commission of Europe, Australian Design Rules, Used With Item No. 1
17					REPAIR PACKAGE

MODEL CODES
16=Cherokee 2 Dr.(1981-83)
17=Cherokee 2 Dr.(1981-83)
73=Cherokee 2WD-2 Dr.(1984-86)
74=Cherokee 2WD-4 Dr.(1984-86)
18=Cherokee 4 Dr.(1981-83)
77=Cherokee 4WD-2 Dr.(1984-86)
78=Cherokee 4WD-4 Dr.(1984-86)
85=CJ-5 (1981-83)
86=CJ-6(1981)
87=CJ-7(1981-86)
88=CJ-8, Scrambler(1981-86)
64=Comanche 2WD-6 Ft. Box(1986)
66=Comanche 2WD-7 Ft. Box(1986)
63=Comanche 4WD-6 Ft. Box(1986)
65=Comanche 4WD-7 Ft. Box(1986)
15=Grand Wagoneer 4 Dr.(1984-86)
25=J-10 Truck 7 Ft. Box(1981-84)
26=J10 Truck 8 Ft. Box(1981-86)
27=J-20 Truck 8 Ft. Box(1981-86)
15=Wagoneer 4 Dr.(1981-83)
75=Wagoneer 4WD-4 Dr.(1984-86)

BODY
CJ=CJ-5, CJ-6, CJ-7, CJ-8, Scrambler(1981-86)
MJ=Comanche Pickup(1986)

STYLES
SJ=Wagoneer(1981-83), Grand Wagoneer(1984-86), Cherokee(1981-83), J-10, J-20(1981-86)
XJ=Wagoneer(1984-86), Cherokee(1984-86)

AR = Use as Required - = Non Illustrated Part P.A.R. = Paint as Required

MASTER CYLINDER WITHOUT POWER BRAKES CJ-5,6,7,8, SCRAMBLER
Figure 5-200

81J05 200

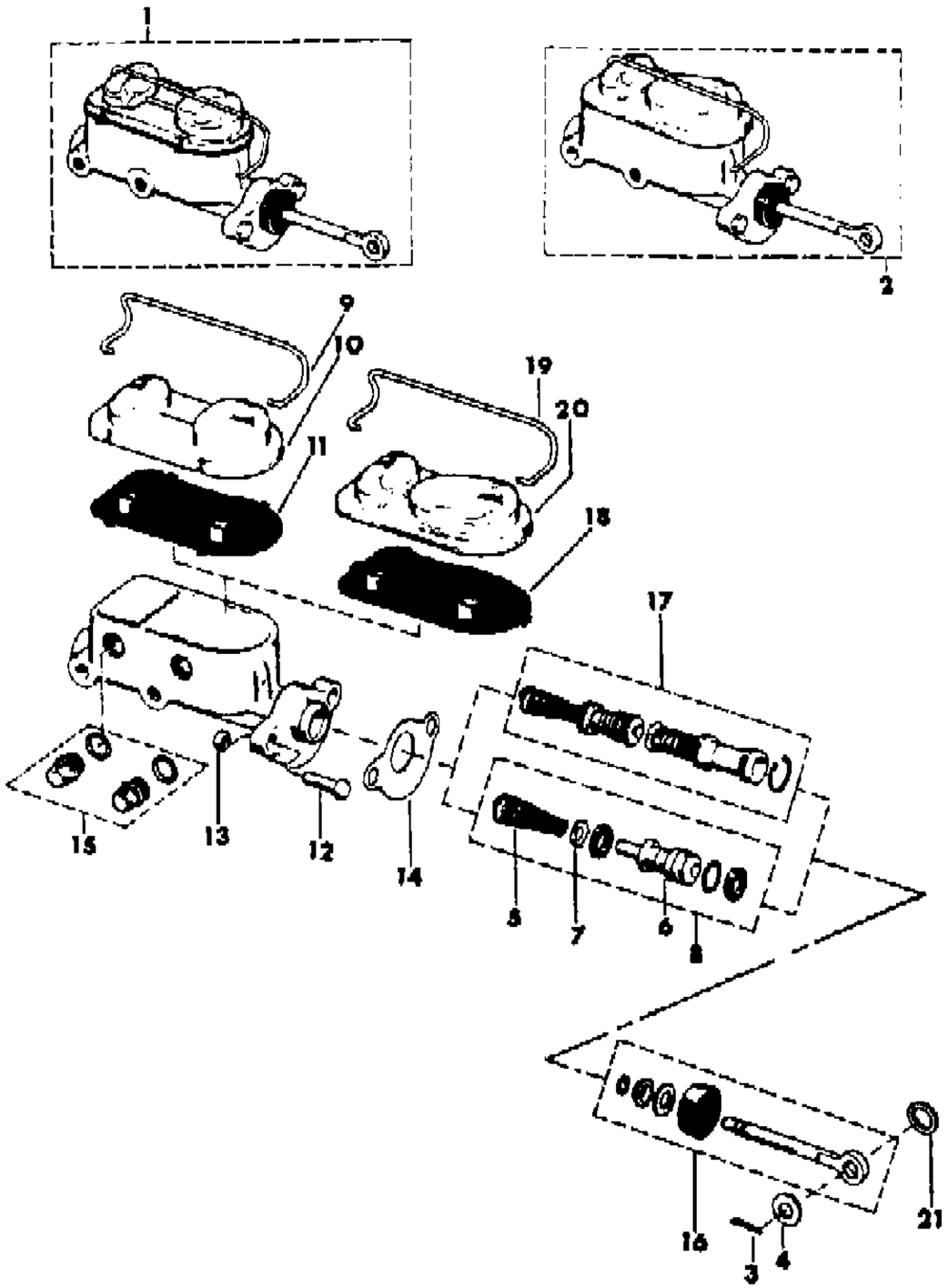

ITEM	PART NUMBER	QTY	BODY	MODEL	DESCRIPTION
	J813 4266	1			1982-86: Used With Item No. 1
	8350 0896	1			1983-86: Used With Item No. 2
	J813 4266	1			1983-86: EXPORT, Economic Commission of Europe, Australian Design Rules, Used With Item No. 1
18	8350 0904	1			GASKET, Used With Item No. 2
19	8350 0905	1			RETAINER, Used With Item No. 2
20	8350 0903	1			COVER, Used With Item No. 2
21	J400 4616	1			WASHER, Spring

MODEL CODES

16=Cherokee 2 Dr.(1981-83)
17=Cherokee 2 Dr.(1981-83)
73=Cherokee 2WD-2 Dr.(1984-86)
74=Cherokee 2WD-4 Dr.(1984-86)
18=Cherokee 4 Dr.(1981-83)
77=Cherokee 4WD-2 Dr.(1984-86)
78=Cherokee 4WD-4 Dr.(1984-86)
85=CJ-5 (1981-83)
86=CJ-6(1981)
87=CJ-7(1981-86)
88=CJ-8, Scrambler(1981-86)
64=Comanche 2WD-6 Ft. Box(1986)
66=Comanche 2WD-7 Ft. Box(1986)
63=Comanche 4WD-6 Ft. Box(1986)
65=Comanche 4WD-7 Ft. Box(1986)
15=Grand Wagoneer 4 Dr.(1984-86)
25=J-10 Truck 7 Ft. Box(1981-84)
26=J10 Truck 8 Ft. Box(1981-86)
27=J-20 Truck 8 Ft. Box(1981-86)
15=Wagoneer 4 Dr.(1981-83)
75=Wagoneer 4WD-4 Dr.(1984-86)

BODY
CJ=CJ-5, CJ-6, CJ-7, CJ-8, Scrambler(1981-86)
MJ=Comanche Pickup(1986)

STYLES
SJ=Wagoneer(1981-83), Grand Wagoneer(1984-86), Cherokee(1981-83), J-10, J-20(1981-86)
XJ=Wagoneer(1984-86), Cherokee(1984-86)

AR = Use as Required - = Non Illustrated Part P.A.R. = Paint as Required

« RETURN TO GROUP INDEX

MASTER CYLINDER AND BOOSTER WITH POWER BRAKES CJ-5,6,7,8, SCRAMBLER
Figure 5-300

81J05 300

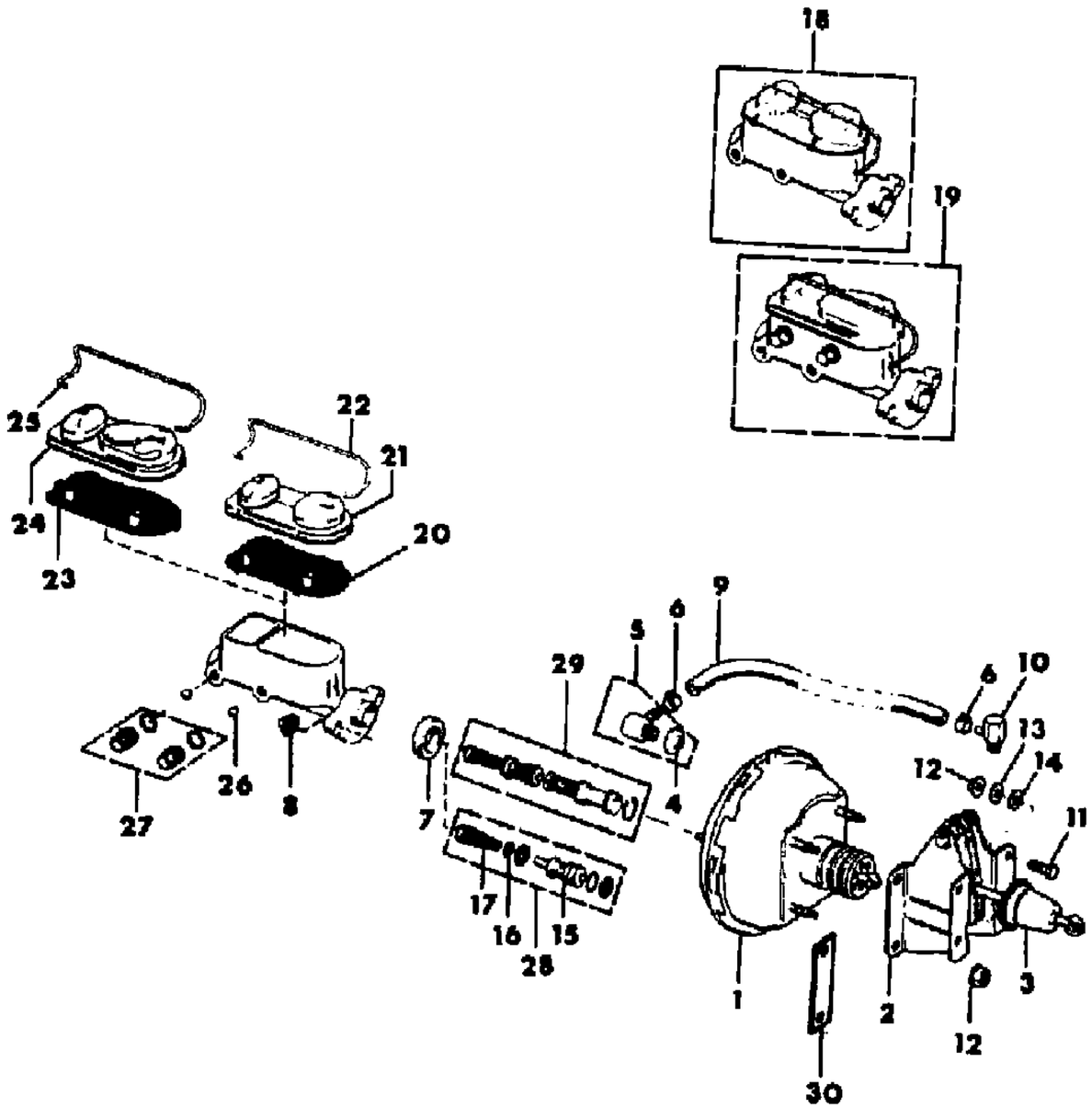

ITEM	PART NUMBER	QTY	BODY	MODEL	DESCRIPTION
1					BOOSTER, Brake
	J813 3306	1			1981
	J813 3909	1			1982-86
2					BRACKET, Booster
	J813 3324	1			1981
	J813 3931	1			1982-86
3	8350 5044	1			BOOT
4	J320 8510	1			GROMMET
5					VALVE PACKAGE, Check
	J812 5991	1			1981
	J448 7455	1			1982-86
6	J320 3076	2			CLAMP
7					SEAL
	J536 2636	1			1981 (D)
8					NUT
	J420 0301	2			1981
	J400 3909	2			1982-86
9	J812 5883	1			HOSE, Vacuum
10	J319 8019	1			NIPPLE
11	J018 0123	4			BOLT
12	J400 3909	4			NUT
13	J400 1104	2			WASHER, Flat
14	J400 6826	4			WASHER, Sealing
15					PISTON
	J813 0063	1			1981
16					RETAINER
	J813 0062	1			1981
17	J812 8283	1			SPRING
18					CYLINDER, Brake Master
	J535 8746	1			1981
	J813 3921	1			1982-83
	J535 9746	1			1981: EXPORT, Economic Commission of Europe, Australian Design Rules
	J813 4123	1			1982-83: EXPORT, Economic Commission of Europe, Australian Design Rules
19					CYLINDER, Brake Master
	8350 0995	1			1983-86
	8350 0996	1			1983-86: EXPORT, Economic Commission of Europe, Australian Design Rules

MODEL CODES

16=Cherokee 2 Dr.(1981-83)	78=Cherokee 4WD-4 Dr.(1984-86)	64=Comanche 2WD-6 Ft. Box(1986)	25=J-10 Truck 7 Ft. Box(1981-84)
17=Cherokee 2 Dr.(1981-83)	85=CJ-5 (1981-83)	66=Comanche 2WD-7 Ft. Box(1986)	26=J10 Truck 8 Ft. Box(1981-86)
73=Cherokee 2WD-2 Dr.(1984-86)	86=CJ-6(1981)	63=Comanche 4WD-6 Ft. Box(1986)	27=J-20 Truck 8 Ft. Box(1981-86)
74=Cherokee 2WD-4 Dr.(1984-86)	87=CJ-7(1981-86)	65=Comanche 4WD-7 Ft. Box(1986)	15=Wagoneer 4 Dr.(1981-83)
18=Cherokee 4 Dr.(1981-83)	88=CJ-8, Scrambler(1981-86)	15=Grand Wagoneer 4 Dr.(1984-86)	75=Wagoneer 4WD-4 Dr.(1984-86)
77=Cherokee 4WD-2 Dr.(1984-86)			

BODY
CJ=CJ-5, CJ-6, CJ-7, CJ-8, Scrambler(1981-86)
MJ=Comanche Pickup(1986)

STYLES
SJ=Wagoneer(1981-83), Grand Wagoneer(1984-86), Cherokee(1981-83), J-10, J-20(1981-86)
XJ=Wagoneer(1984-86), Cherokee(1984-86)

AR = Use as Required - = Non Illustrated Part P.A.R. = Paint as Required

MASTER CYLINDER AND BOOSTER WITH POWER BRAKES CJ-5,6,7,8, SCRAMBLER
Figure 5-300

81J05 300

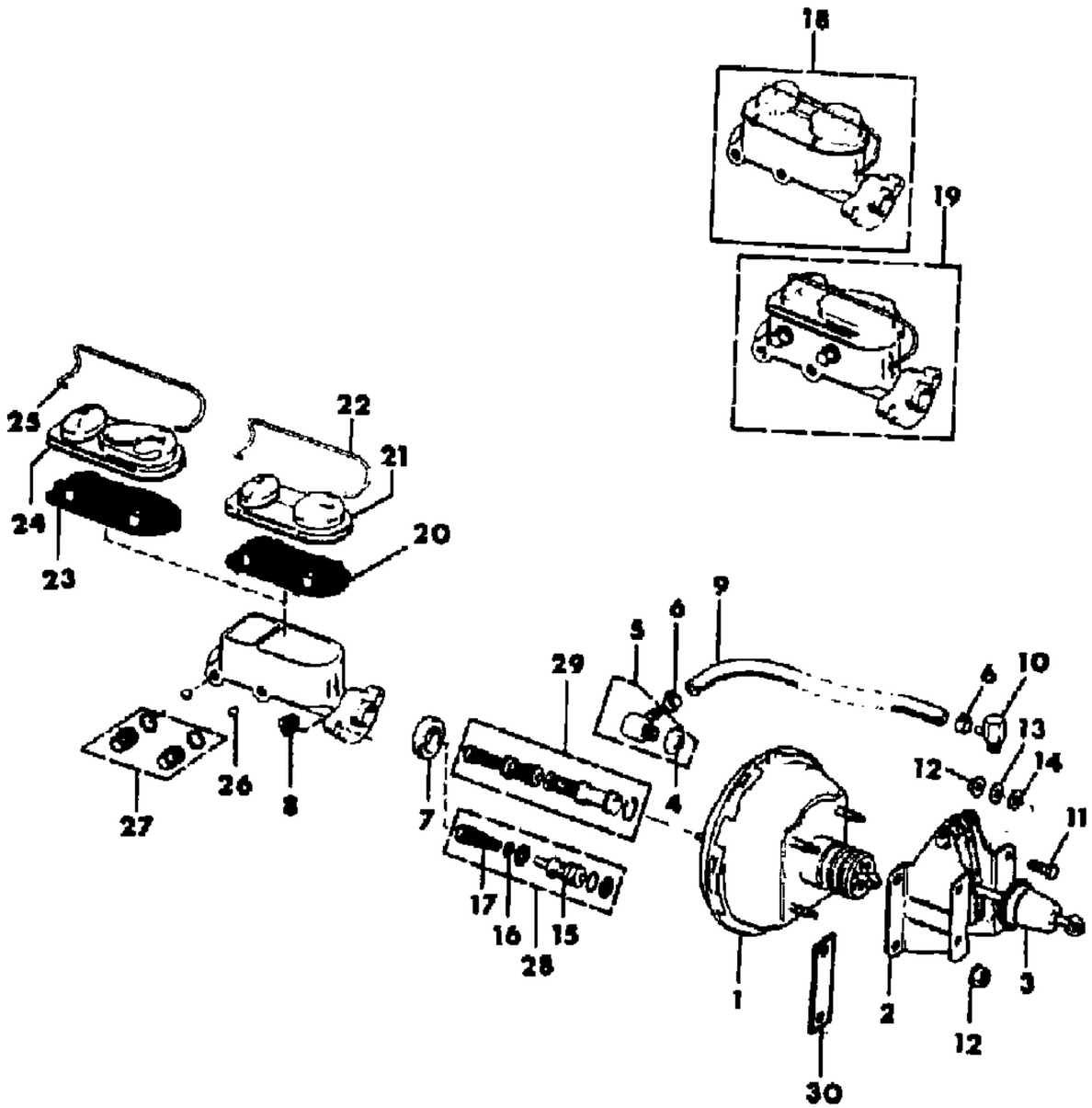

ITEM	PART NUMBER	QTY	BODY	MODEL	DESCRIPTION
20					GASKET, Used With Item No. 18
	J812 8260	1			1981
	J813 3920	1			1982-83
21	J813 3919	1			COVER, Used With Item No. 18, 1981-83
22	J813 3918	1			RETAINER, Used with Item No. 18, 1981-83
23	8350 0904	1			GASKET, Used With Item No. 19
24	8350 0903	1			COVER, Used With Item No. 19
25	8350 0905	1			RETAINER, Used With Item No. 19
26	J448 5610	2			SEAT
27	8350 0142	1			GLASS, Sight, EXPORT, Economic Commission of Europe
28					REPAIR PACKAGE
	J813 0066	1			1981
29					REPAIR PACKAGE
	J813 4247	1			1982-86
30	J536 4833	1			SPACER

MODEL CODES

16=Cherokee 2 Dr.(1981-83)
17=Cherokee 2 Dr.(1981-83)
73=Cherokee 2WD-2 Dr.(1984-86)
74=Cherokee 2WD-4 Dr.(1984-86)
18=Cherokee 4 Dr.(1981-83)
77=Cherokee 4WD-2 Dr.(1984-86)
78=Cherokee 4WD-4 Dr.(1984-86)
85=CJ-5 (1981-83)
86=CJ-6(1981)
87=CJ-7(1981-86)
88=CJ-8, Scrambler(1981-86)
64=Comanche 2WD-6 Ft. Box(1986)
66=Comanche 2WD-7 Ft. Box(1986)
63=Comanche 4WD-6 Ft. Box(1986)
65=Comanche 4WD-7 Ft. Box(1986)
15=Grand Wagoneer 4 Dr.(1984-86)
25=J-10 Truck 7 Ft. Box(1981-84)
26=J10 Truck 8 Ft. Box(1981-86)
27=J-20 Truck 8 Ft. Box(1981-86)
15=Wagoneer 4 Dr.(1981-83)
75=Wagoneer 4WD-4 Dr.(1984-86)

BODY
CJ=CJ-5, CJ-6, CJ-7, CJ-8, Scrambler(1981-86)
MJ=Comanche Pickup(1986)

STYLES
SJ=Wagoneer(1981-83), Grand Wagoneer(1984-86), Cherokee(1981-83), J-10, J-20(1981-86)
XJ=Wagoneer(1984-86), Cherokee(1984-86)

AR = Use as Required - = Non Illustrated Part P.A.R. = Paint as Required

LINES AND HOSES, BRAKE CJ-5,6,7,8, SCRAMBLER
Figure 5-400

81J05 400

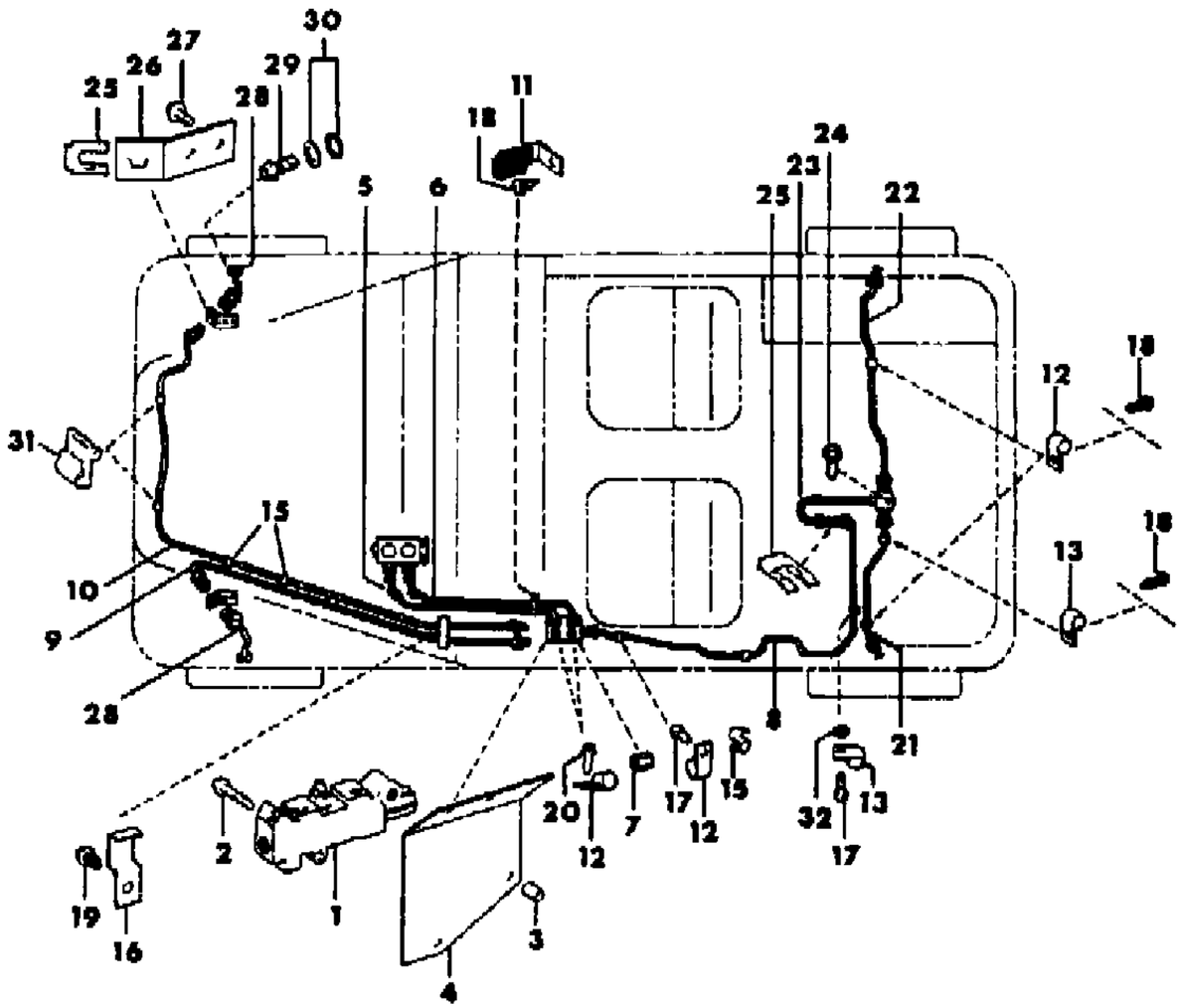

ITEM	PART NUMBER	QTY	BODY	MODEL	DESCRIPTION
1					VALVE, Proportioning
	J535 9220	1			1981
	J535 6622	1			1982-86
	J536 1325	1			EXPORT, Economic Commission of Europe
2	J400 6830	2			SCREW
3	J098 1816	2			NUTSERT ***
4	J535 6586	1			BRACKET
5					LINE, Brake, Master Cylinder, Front
	J536 0921	1			Without Power Brakes
	J535 6584	1			With Power Brakes
	J535 9102	1			EXPORT, Right Hand Drive, Lower
	J535 9266	1			EXPORT, Right Hand Drive, Upper
	J536 1941	1			EXPORT, Right Hand Drive, Upper, With Power Brakes
6					LINE, Brake, Master Cylinder Rear
	J536 0922	1			Without Power Brakes
	J535 6582	1			With Power Brakes
	J535 9088	1			EXPORT, Right Hand Drive, Lower
	J535 9267	1			EXPORT, Right Hand Drive, Upper, Without Power Brakes
	J536 1942	1			EXPORT, Right Hand Drive, Upper, With Power Brakes
7	J318 7740	1			UNION, EXPORT, Right Hand Drive
8					LINE, Brake, Valve to Rear Axle
	J536 2103	1		85	1981
	J536 3478	1		85	1982-83
	J536 2109	1		86,88	1981
	J536 2117	1		87	1981
	J536 3480	1		87	1982-86
	J536 3479	1		88	1982-86
9	J536 1581	1			LINE, Brake, Left Front
10	J536 1580	1			LINE, Brake, Right Front
11	J400 5650	1			CLIP
12	J012 0522	4			CLIP
13	J019 2107	1			CLIP
15	J080 0743	3			CLIP
16	J400 4901	3			CLIP
17	J400 4077	2			SCREW
18	J400 5691	3			SCREW
19	J097 4764	1			SCREW
20	J400 4081	2			SCREW
21					LINE, Brake, Left Rear Axle

MODEL CODES
16=Cherokee 2 Dr.(1981-83)
17=Cherokee 2 Dr.(1981-83)
73=Cherokee 2WD-2 Dr.(1984-86)
74=Cherokee 2WD-4 Dr.(1984-86)
18=Cherokee 4 Dr.(1981-83)
77=Cherokee 4WD-2 Dr.(1984-86)
78=Cherokee 4WD-4 Dr.(1984-86)
85=CJ-5 (1981-83)
86=CJ-6(1981)
87=CJ-7(1981-86)
88=CJ-8, Scrambler(1981-86)
64=Comanche 2WD-6 Ft. Box(1986)
66=Comanche 2WD-7 Ft. Box(1986)
63=Comanche 4WD-6 Ft. Box(1986)
65=Comanche 4WD-7 Ft. Box(1986)
15=Grand Wagoneer 4 Dr.(1984-86)
25=J-10 Truck 7 Ft. Box(1981-84)
26=J10 Truck 8 Ft. Box(1981-86)
27=J-20 Truck 8 Ft. Box(1981-86)
15=Wagoneer 4 Dr.(1981-83)
75=Wagoneer 4WD-4 Dr.(1984-86)

BODY
CJ=CJ-5, CJ-6, CJ-7, CJ-8, Scrambler(1981-86)
MJ=Comanche Pickup(1986)

STYLES
SJ=Wagoneer(1981-83), Grand Wagoneer(1984-86), Cherokee(1981-83), J-10, J-20(1981-86)
XJ=Wagoneer(1984-86), Cherokee(1984-86)

AR = Use as Required - = Non Illustrated Part P.A.R. = Paint as Required

LINES AND HOSES, BRAKE CJ-5,6,7,8, SCRAMBLER
Figure 5-400

81J05 400

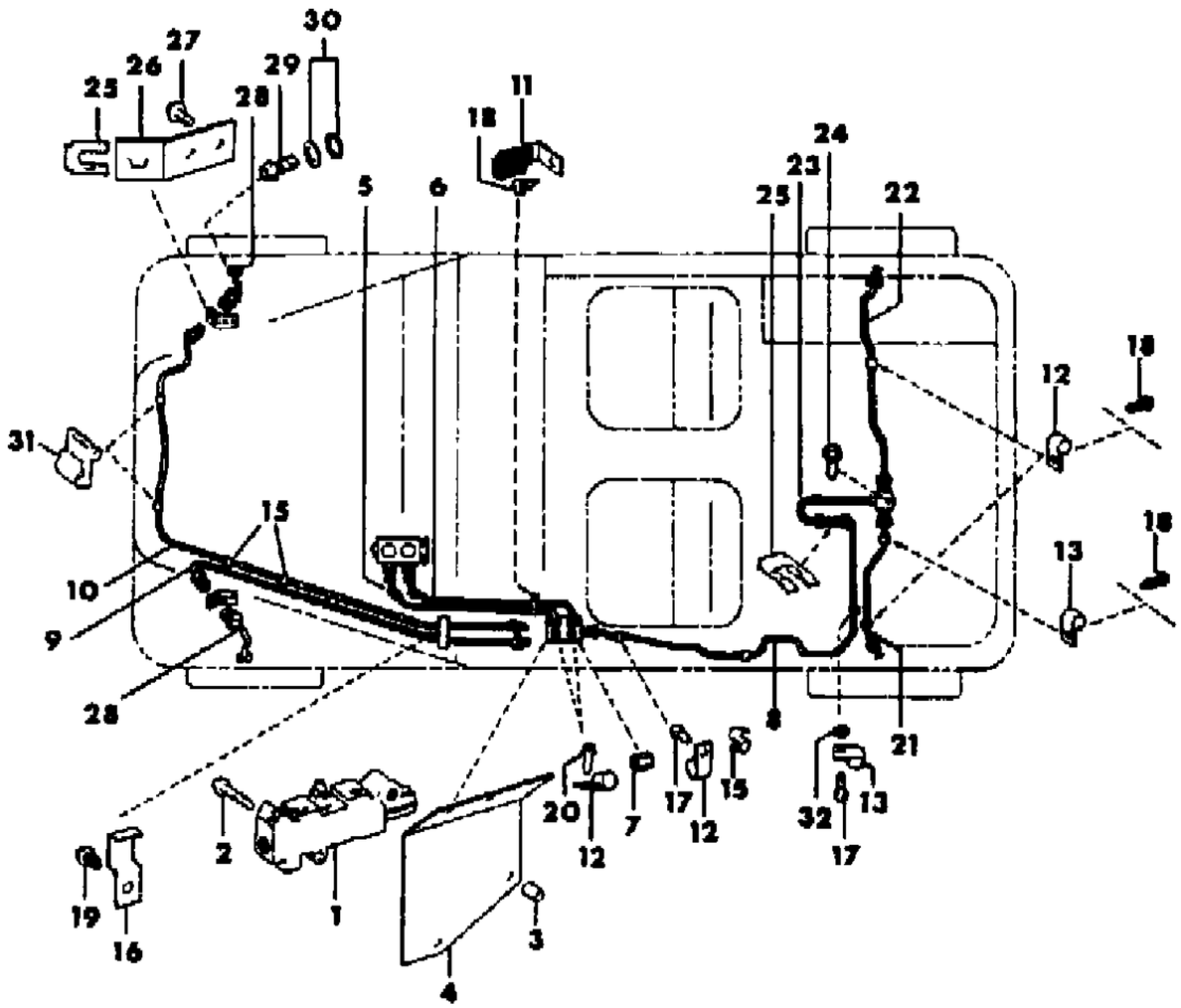

ITEM	PART NUMBER	QTY	BODY	MODEL	DESCRIPTION
	J535 8623	1			1981
	J535 8623	1		85,86	1982-83
	J535 3754	1		87,88	1982-86
22					LINE, Brake, Right Rear Axle
	J535 8624	1			1981
	J535 8624	1		85,86	1982-83
	J536 3755	1		87,88	1982-86
23	J536 2842	1			HOSE, Rear Brake
24	J400 5691	1			BOLT
25	J063 7427	3			CLIP, Lock
26					BRACKET, Brake Hose Mount
	J535 9038	1			1981
	J536 3328	1			1982-86
27	J400 5063	4			SCREW
28					HOSE, Front Brake
	J535 9037	2			1981
	J536 3917	2		85,86	1982-83
	J536 3908	1		87,88	1982-86: Left
	J536 3756	1		87,88	1982-86: Right
29					BOLT
	J322 5703	2			1981
	J400 6700	2			1982-86
30					GASKET
	J322 7849	4			1981
	J323 6434	4			1982-86
31	S012 7753	2			CLIP
32	J027 1172	1			NUT

MODEL CODES
16=Cherokee 2 Dr.(1981-83)
17=Cherokee 2 Dr.(1981-83)
73=Cherokee 2WD-2 Dr.(1984-86)
74=Cherokee 2WD-4 Dr.(1984-86)
18=Cherokee 4 Dr.(1981-83)
77=Cherokee 4WD-2 Dr.(1984-86)
78=Cherokee 4WD-4 Dr.(1984-86)
85=CJ-5 (1981-83)
86=CJ-6(1981)
87=CJ-7(1981-86)
88=CJ-8, Scrambler(1981-86)
64=Comanche 2WD-6 Ft. Box(1986)
66=Comanche 2WD-7 Ft. Box(1986)
63=Comanche 4WD-6 Ft. Box(1986)
65=Comanche 4WD-7 Ft. Box(1986)
15=Grand Wagoneer 4 Dr.(1984-86)
25=J-10 Truck 7 Ft. Box(1981-84)
26=J10 Truck 8 Ft. Box(1981-86)
27=J-20 Truck 8 Ft. Box(1981-86)
15=Wagoneer 4 Dr.(1981-83)
75=Wagoneer 4WD-4 Dr.(1984-86)

BODY
CJ=CJ-5, CJ-6, CJ-7, CJ-8, Scrambler(1981-86)
MJ=Comanche Pickup(1986)

STYLES
SJ=Wagoneer(1981-83), Grand Wagoneer(1984-86), Cherokee(1981-83), J-10, J-20(1981-86)
XJ=Wagoneer(1984-86), Cherokee(1984-86)

AR = Use as Required - = Non Illustrated Part P.A.R. = Paint as Required

BRAKES, FRONT 1981 CJ-5,6,7,8, SCRAMBLER
Figure 5-500

81J05 500

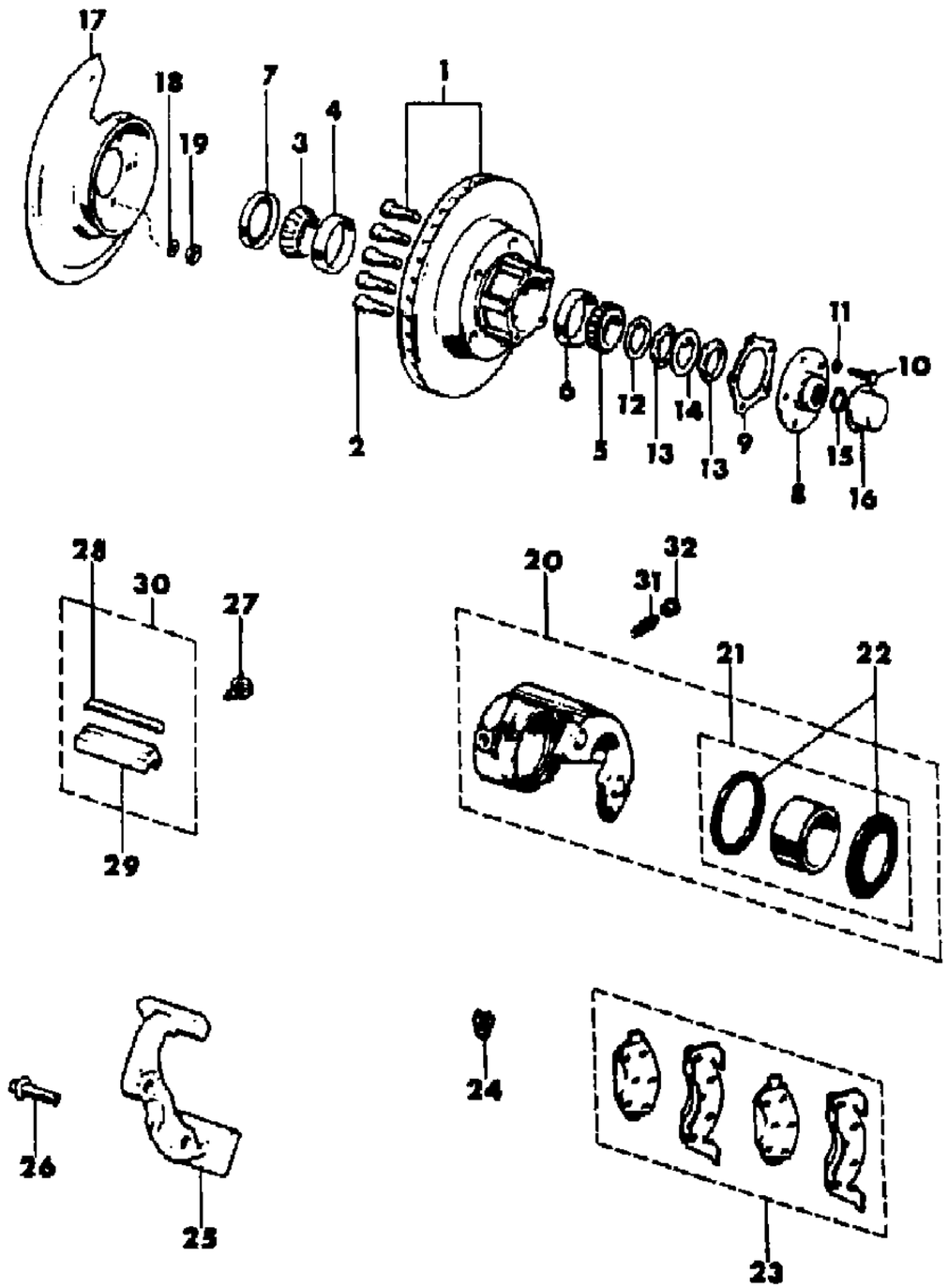

ITEM	PART NUMBER	QTY	BODY	MODEL	DESCRIPTION
1					ROTOR, Brake
	J535 8568	2			Flange (Item No. 8) Mounts with 6 bolts
	J536 1982	2			Flange (Item No. 8) Mounts with 5 bolts
2	J535 7196	10			STUD
3	J535 6661	2			CONE, Bearing
4	J812 7630	2			CUP, Bearing
5	J315 6052	2			CONE, Bearing
6	J092 5447	2			CUP, Bearing
7	J535 6675	2			RETAINER
8					FLANGE ***
	J099 9396	2			Mounts with 6 bolts
	J536 2000	2			Mounts with 5 bolts
9					GASKET
	J064 9784	2			Mounts with 6 bolts
	J536 2001	2			Mounts with 5 bolts
10	J400 5827	12			BOLT
11	J400 4807	12			WASHER
12	JA00 0865	2			WASHER
13	JA00 0866	4			NUT
14	JA00 0867	4			WASHER
15	J064 9778	2			RING
16	J094 7085	2			CAP
17	J535 8619	2			SHIELD
18	J400 1181	12			WASHER
19	J099 4925	12			NUT
20					CALIPER, Brake
	J813 1648	1			Right
	J813 1649	1			Left
21	J812 7582	1			PISTON AND SEAL PACKAGE ***
22	J812 7583	1			SEAL PACKAGE
23	J813 1785	1			PAD PACKAGE, Brake
24	J322 9031	2			SPRING
25					BRACKET, Caliper
	J535 9144	1			Right
	J535 9145	1			Left
26	S942 4033	4			BOLT
27	J322 3416	2			BOLT
28	J322 9032	2			KEY
29	J322 9033	2			SUPPORT

MODEL CODES
16=Cherokee 2 Dr.(1981-83)
17=Cherokee 2 Dr.(1981-83)
73=Cherokee 2WD-2 Dr.(1984-86)
74=Cherokee 2WD-4 Dr.(1984-86)
18=Cherokee 4 Dr.(1981-83)
77=Cherokee 4WD-2 Dr.(1984-86)
78=Cherokee 4WD-4 Dr.(1984-86)
85=CJ-5 (1981-83)
86=CJ-6(1981)
87=CJ-7(1981-86)
88=CJ-8, Scrambler(1981-86)
64=Comanche 2WD-6 Ft. Box(1986)
66=Comanche 2WD-7 Ft. Box(1986)
63=Comanche 4WD-6 Ft. Box(1986)
65=Comanche 4WD-7 Ft. Box(1986)
15=Grand Wagoneer 4 Dr.(1984-86)
25=J-10 Truck 7 Ft. Box(1981-84)
26=J10 Truck 8 Ft. Box(1981-86)
27=J-20 Truck 8 Ft. Box(1981-86)
15=Wagoneer 4 Dr.(1981-83)
75=Wagoneer 4WD-4 Dr.(1984-86)

BODY
CJ=CJ-5, CJ-6, CJ-7, CJ-8, Scrambler(1981-86)
MJ=Comanche Pickup(1986)

STYLES
SJ=Wagoneer(1981-83), Grand Wagoneer(1984-86), Cherokee(1981-83), J-10, J-20(1981-86)
XJ=Wagoneer(1984-86), Cherokee(1984-86)

AR = Use as Required - = Non Illustrated Part P.A.R. = Paint as Required

81J05 500

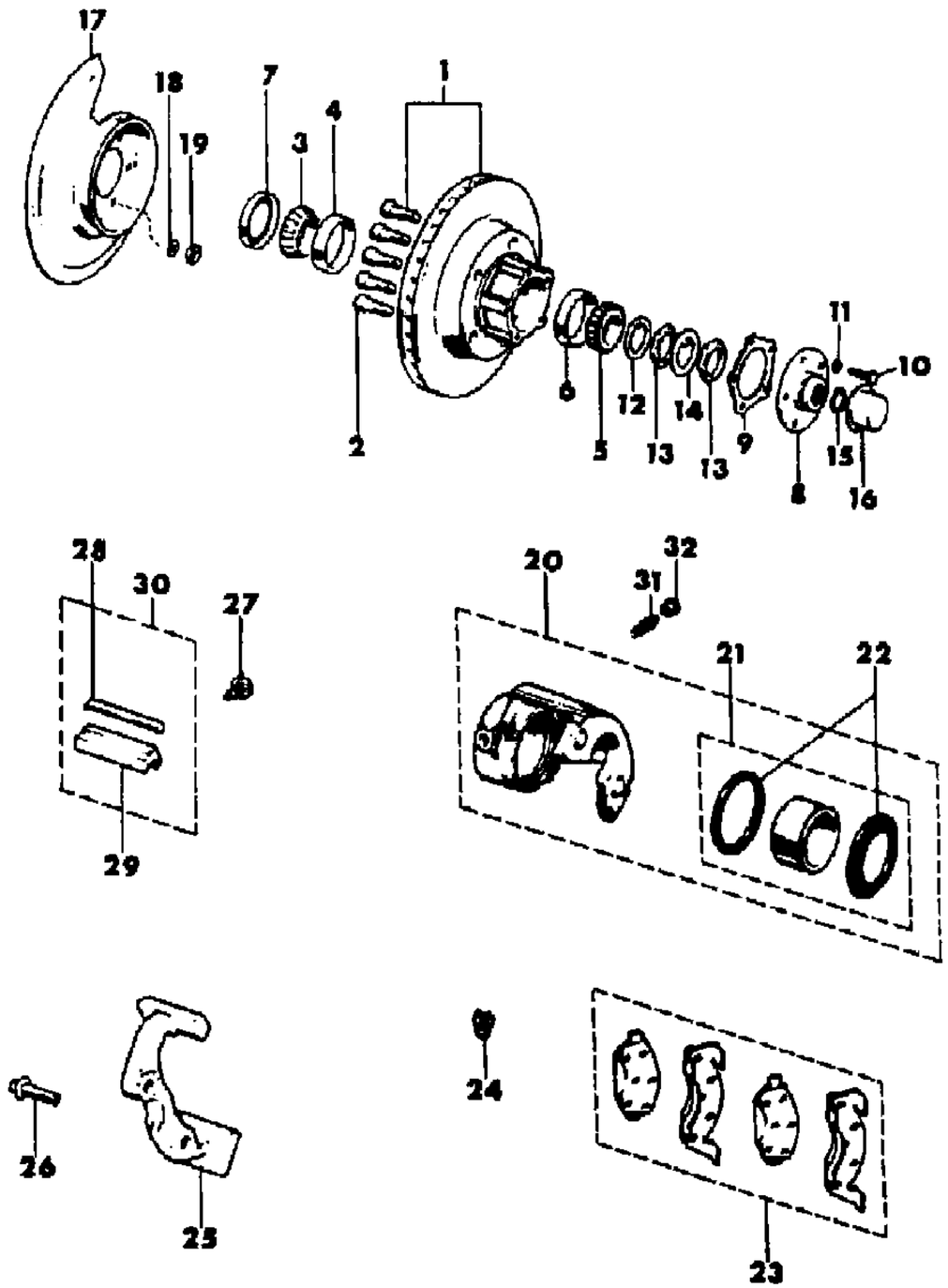

ITEM	PART NUMBER	QTY	BODY	MODEL	DESCRIPTION
30	8350 3571	2			SUPPORT AND KEY PACKAGE ***
31	J320 3313	2			SCREW, Bleeder
32	J324 0871	2			CAP

MODEL CODES

16=Cherokee 2 Dr.(1981-83)
17=Cherokee 2 Dr.(1981-83)
73=Cherokee 2WD-2 Dr.(1984-86)
74=Cherokee 2WD-4 Dr.(1984-86)
18=Cherokee 4 Dr.(1981-83)
77=Cherokee 4WD-2 Dr.(1984-86)
78=Cherokee 4WD-4 Dr.(1984-86)
85=CJ-5 (1981-83)
86=CJ-6(1981)
87=CJ-7(1981-86)
88=CJ-8, Scrambler(1981-86)
64=Comanche 2WD-6 Ft. Box(1986)
66=Comanche 2WD-7 Ft. Box(1986)
63=Comanche 4WD-6 Ft. Box(1986)
65=Comanche 4WD-7 Ft. Box(1986)
15=Grand Wagoneer 4 Dr.(1984-86)
25=J-10 Truck 7 Ft. Box(1981-84)
26=J10 Truck 8 Ft. Box(1981-86)
27=J-20 Truck 8 Ft. Box(1981-86)
15=Wagoneer 4 Dr.(1981-83)
75=Wagoneer 4WD-4 Dr.(1984-86)

BODY
CJ=CJ-5, CJ-6, CJ-7, CJ-8, Scrambler(1981-86)
MJ=Comanche Pickup(1986)

STYLES
SJ=Wagoneer(1981-83), Grand Wagoneer(1984-86), Cherokee(1981-83), J-10, J-20(1981-86)
XJ=Wagoneer(1984-86), Cherokee(1984-86)

AR = Use as Required - = Non Illustrated Part P.A.R. = Paint as Required

BRAKES, FRONT 1982-86 CJ-5,6,7,8, SCRAMBLER
Figure 5-600

81J05 600

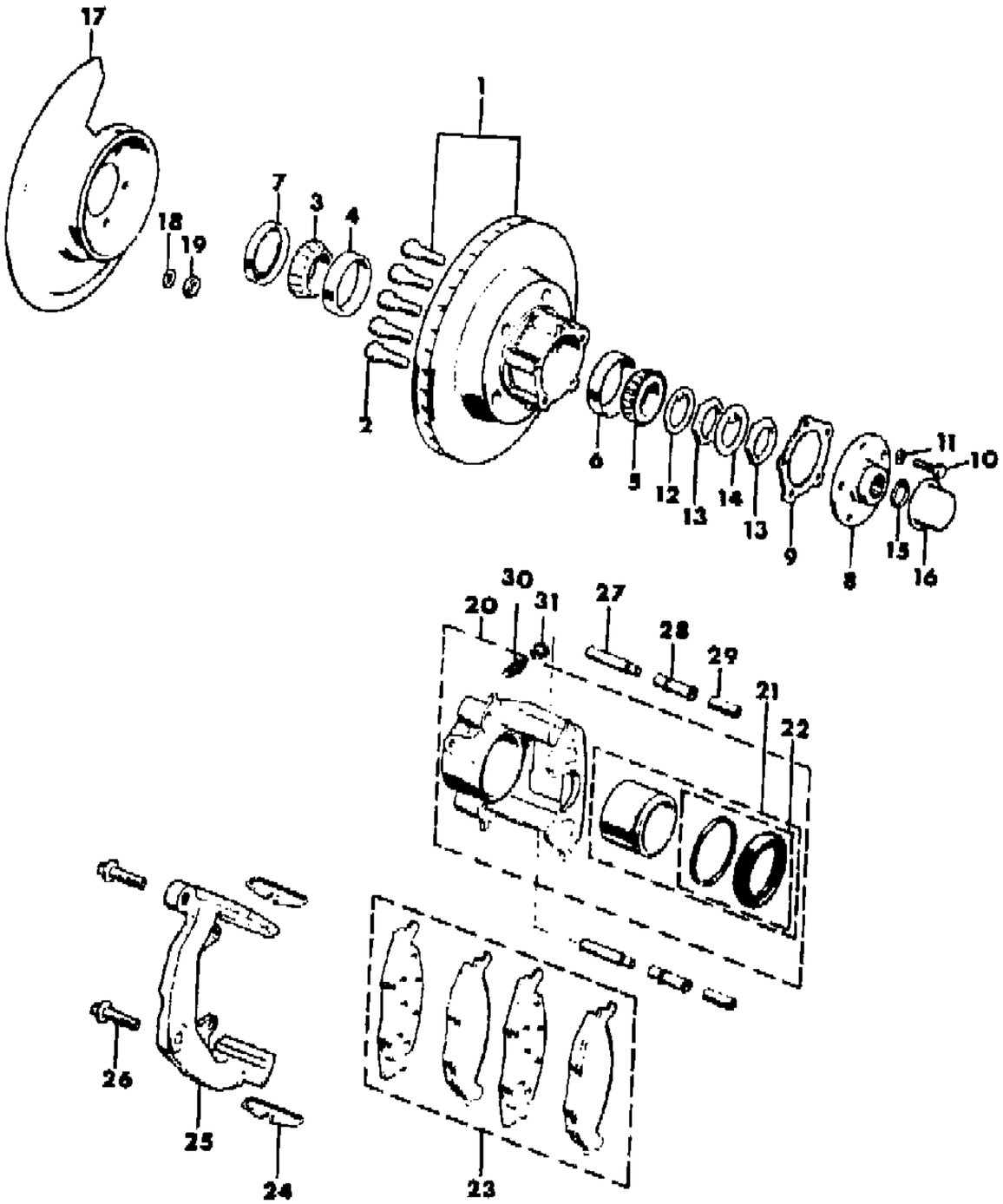

ITEM	PART NUMBER	QTY	BODY	MODEL	DESCRIPTION
1	J536 3421	2			ROTOR, Brake
2	J535 7196	10			STUD
3	J535 6661	2			CONE, Bearing
4	J812 7630	2			CUP, Bearing
5	J315 6052	2			CONE, Bearing
6	J092 5447	2			CUP, Bearing
7					RETAINER
	J535 6675	2			1982-83
	J536 5082	2			1984-86
8	J536 2000	2			FLANGE ***
9	J536 2001	2			GASKET
10	J400 5827	10			BOLT
11	J400 4807	10			WASHER
12	JA00 0865	2			WASHER
13	JA00 0866	4			NUT
14	JA00 0867	2			WASHER
15	J064 9778	2			RING
16	J094 7085	2			CAP
17					SHIELD
	J536 3380	1			Right
	J536 3379	1			Left
18	J400 1181	12			WASHER
19	J099 4925	12			NUT
20					CALIPER, Brake
	J813 3846	1			Right
	J813 3847	1			Left
21	J813 3845	2			PISTON AND SEAL PACKAGE ***
22	J813 3852	2			SEAL PACKAGE
23	J813 3853	1			PAD PACKAGE, Brake
24	J323 9865	4			SPRING
25					BRACKET, Mounting
	J536 3414	1			Right
	J536 3413	1			Left
26	J400 6941	4			BOLT
27	J323 9866	4			PIN, Caliper
28					BUSHING, Outer
	J323 9867	4			1982-84
	5200 1700	4			1985-86
29					BUSHING, Inner

MODEL CODES
16=Cherokee 2 Dr.(1981-83)
17=Cherokee 2 Dr.(1981-83)
73=Cherokee 2WD-2 Dr.(1984-86)
74=Cherokee 2WD-4 Dr.(1984-86)
18=Cherokee 4 Dr.(1981-83)
77=Cherokee 4WD-2 Dr.(1984-86)
78=Cherokee 4WD-4 Dr.(1984-86)
85=CJ-5 (1981-83)
86=CJ-6(1981)
87=CJ-7(1981-86)
88=CJ-8, Scrambler(1981-86)
64=Comanche 2WD-6 Ft. Box(1986)
66=Comanche 2WD-7 Ft. Box(1986)
63=Comanche 4WD-6 Ft. Box(1986)
65=Comanche 4WD-7 Ft. Box(1986)
15=Grand Wagoneer 4 Dr.(1984-86)
25=J-10 Truck 7 Ft. Box(1981-84)
26=J10 Truck 8 Ft. Box(1981-86)
27=J-20 Truck 8 Ft. Box(1981-86)
15=Wagoneer 4 Dr.(1981-83)
75=Wagoneer 4WD-4 Dr.(1984-86)

BODY
CJ=CJ-5, CJ-6, CJ-7, CJ-8, Scrambler(1981-86)
MJ=Comanche Pickup(1986)

STYLES
SJ=Wagoneer(1981-83), Grand Wagoneer(1984-86), Cherokee(1981-83), J-10, J-20(1981-86)
XJ=Wagoneer(1984-86), Cherokee(1984-86)

AR = Use as Required - = Non Illustrated Part P.A.R. = Paint as Required

« RETURN TO GROUP INDEX »

BRAKES, FRONT 1982-86 CJ-5,6,7,8, SCRAMBLER
Figure 5-600

81J05 600

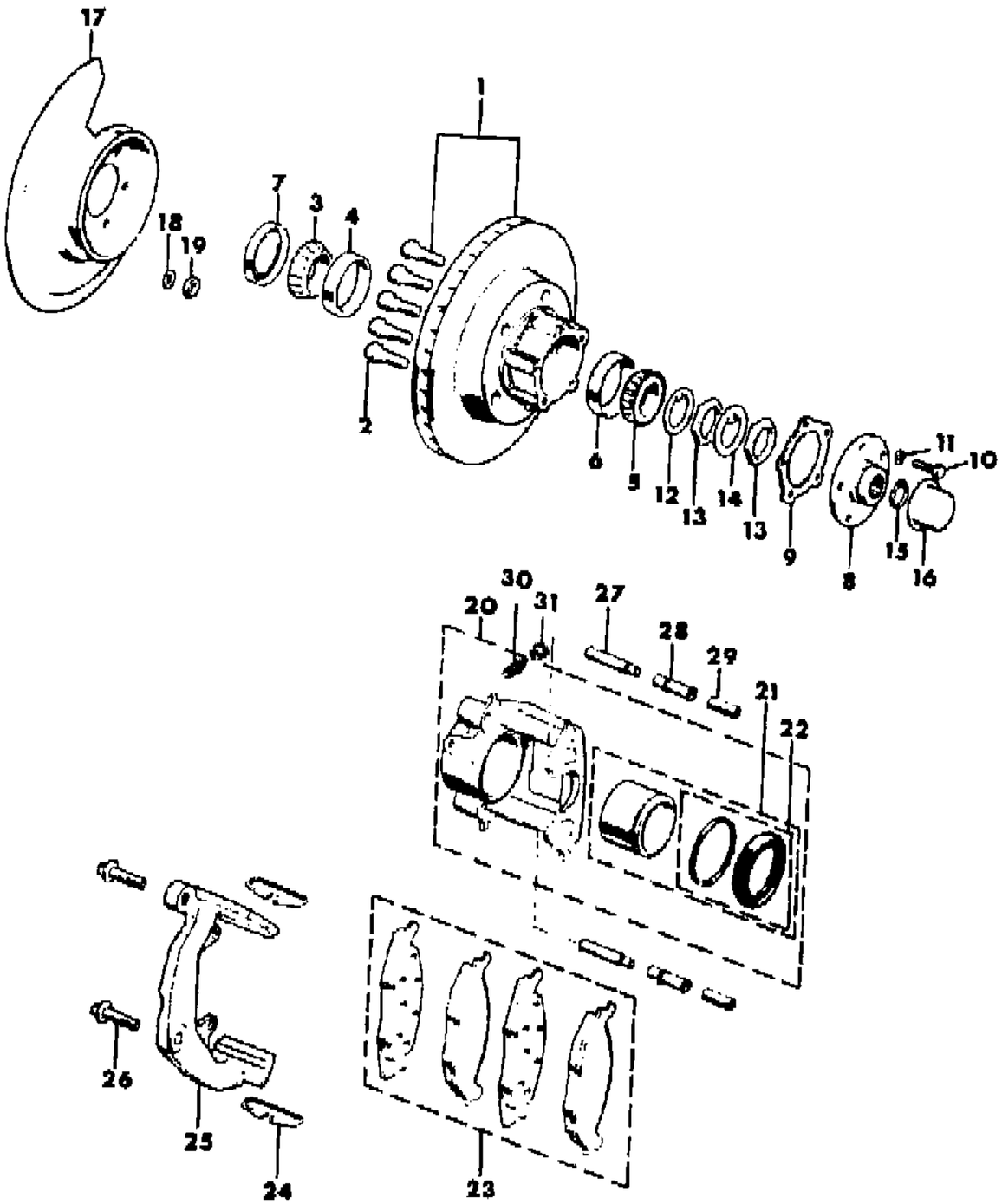

ITEM	PART NUMBER	QTY	BODY	MODEL	DESCRIPTION
	J324 0890	4			1982-84
	5200 1701	4			1985-86
30	J320 3313	2			SCREW, Bleeder
31	J324 0871	2			CAP

MODEL CODES

16=Cherokee 2 Dr.(1981-83)
17=Cherokee 2 Dr.(1981-83)
73=Cherokee 2WD-2 Dr.(1984-86)
74=Cherokee 2WD-4 Dr.(1984-86)
18=Cherokee 4 Dr.(1981-83)
77=Cherokee 4WD-2 Dr.(1984-86)
78=Cherokee 4WD-4 Dr.(1984-86)
85=CJ-5 (1981-83)
86=CJ-6(1981)
87=CJ-7(1981-86)
88=CJ-8, Scrambler(1981-86)
64=Comanche 2WD-6 Ft. Box(1986)
66=Comanche 2WD-7 Ft. Box(1986)
63=Comanche 4WD-6 Ft. Box(1986)
65=Comanche 4WD-7 Ft. Box(1986)
15=Grand Wagoneer 4 Dr.(1984-86)
25=J-10 Truck 7 Ft. Box(1981-84)
26=J10 Truck 8 Ft. Box(1981-86)
27=J-20 Truck 8 Ft. Box(1981-86)
15=Wagoneer 4 Dr.(1981-83)
75=Wagoneer 4WD-4 Dr.(1984-86)

BODY
CJ=CJ-5, CJ-6, CJ-7, CJ-8, Scrambler(1981-86)
MJ=Comanche Pickup(1986)

STYLES
SJ=Wagoneer(1981-83), Grand Wagoneer(1984-86), Cherokee(1981-83), J-10, J-20(1981-86)
XJ=Wagoneer(1984-86), Cherokee(1984-86)

AR = Use as Required - = Non Illustrated Part P.A.R. = Paint as Required

« RETURN TO GROUP INDEX

BRAKES, REAR AMC LARGE AXLE CJ-5,6,7,8, SCRAMBLER
Figure 5-700

81J05 700

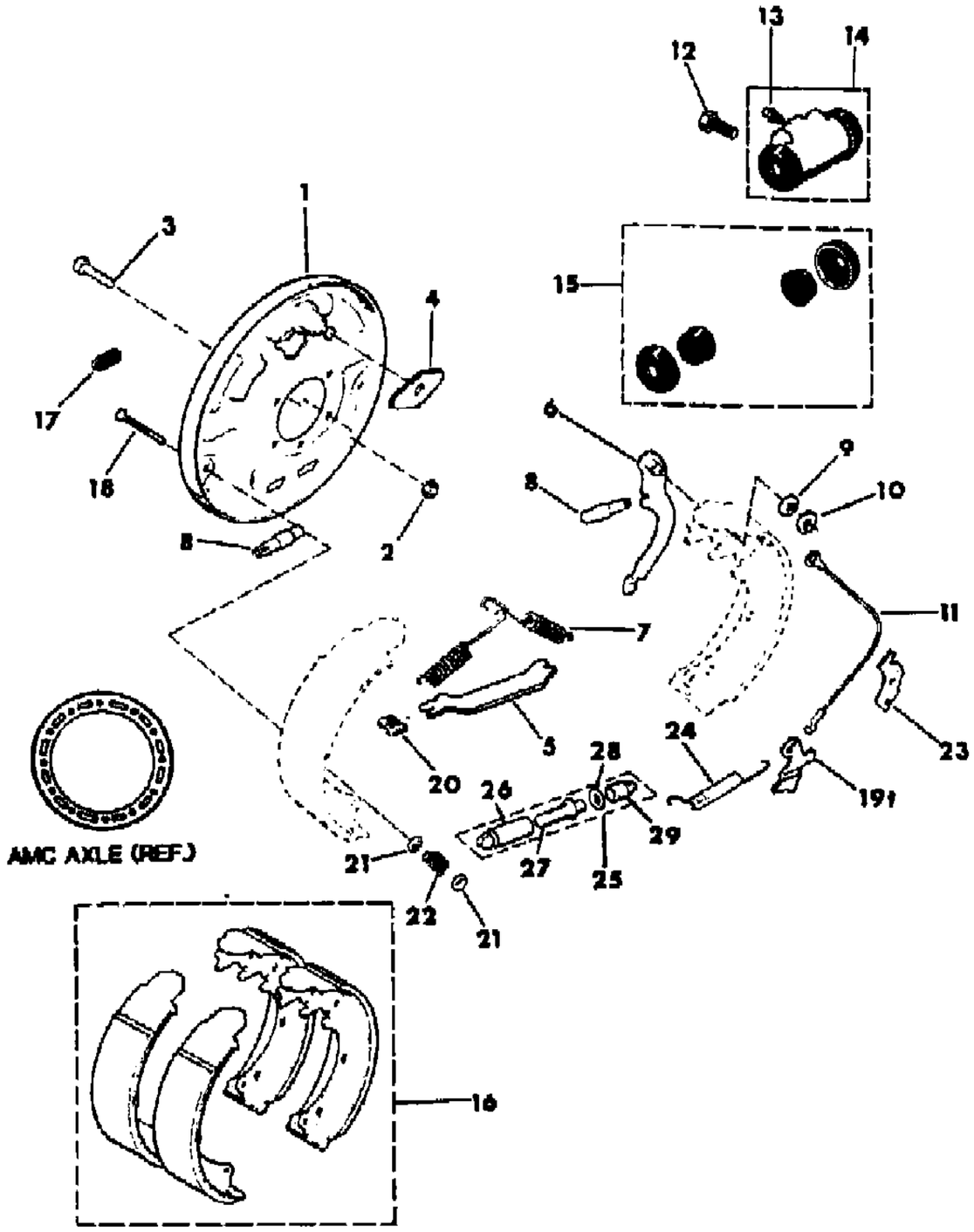

ITEM	PART NUMBER	QTY	BODY	MODEL	DESCRIPTION
1					PLATE, Backing
	J448 8452	1			Right
	J448 8453	1			Left
2	J400 1239	8			NUT
3	J314 3794	8			BOLT
4	J320 1032	2			PLATE, Guide
5	J311 2778	2			STRUT. Parking ***
6					LEVER, Parking Brake
	J320 1034	1			Right
	J320 1033	1			Left
7	J311 2780	4			SPRING, Return
8	J004 8331	4			LINK, Cylinder
9	J310 8203	2			WASHER
10	J310 8202	2			RETAINER
11	J320 1027	2			CABLE, Adjuster
12	J448 6551	4			BOLT
13	J320 3313	2			SCREW, Bleeder
14					CYLINDER, Wheel
	J322 5196	1			Right
	J322 5197	1			Left
15	J812 6728	2			REPAIR PACKAGE, Wheel Cylinder
16					SHOE PACKAGE ***
	J813 3818	1			EXPORT
	4762 542	1			EUROPE
	JR77 5075	1			Remanufactured
17	J320 1957	4			PLUG
18	J314 3612	4			PIN
19					LEVER, Adjuster
	J320 1030	1			Right
	J320 1029	1			Left
20	J311 2779	2			SPRING
21	J008 9259	8			CUP
22	J320 5979	4			SPRING
23	J320 1947	2			GUIDE
24	J320 1937	2			SPRING
25					ADJUSTER
	5200 1216	1			Right
	5200 1215	1			Left
26					NUT

MODEL CODES

16=Cherokee 2 Dr.(1981-83)	78=Cherokee 4WD-4 Dr.(1984-86)	64=Comanche 2WD-6 Ft. Box(1986)	25=J-10 Truck 7 Ft. Box(1981-84)
17=Cherokee 2 Dr.(1981-83)	85=CJ-5 (1981-83)	66=Comanche 2WD-7 Ft. Box(1986)	26=J10 Truck 8 Ft. Box(1981-86)
73=Cherokee 2WD-2 Dr.(1984-86)	86=CJ-6(1981)	63=Comanche 4WD-6 Ft. Box(1986)	27=J-20 Truck 8 Ft. Box(1981-86)
74=Cherokee 2WD-4 Dr.(1984-86)	87=CJ-7(1981-86)	65=Comanche 4WD-7 Ft. Box(1986)	15=Wagoneer 4 Dr.(1981-83)
18=Cherokee 4 Dr.(1981-83)	88=CJ-8, Scrambler(1981-86)	15=Grand Wagoneer 4 Dr.(1984-86)	75=Wagoneer 4WD-4 Dr.(1984-86)
77=Cherokee 4WD-2 Dr.(1984-86)			

BODY
CJ=CJ-5, CJ-6, CJ-7, CJ-8, Scrambler(1981-86)
MJ=Comanche Pickup(1986)

STYLES
SJ=Wagoneer(1981-83), Grand Wagoneer(1984-86), Cherokee(1981-83), J-10, J-20(1981-86)
XJ=Wagoneer(1984-86), Cherokee(1984-86)

AR = Use as Required - = Non Illustrated Part P.A.R. = Paint as Required

BRAKES, REAR AMC LARGE AXLE CJ-5,6,7,8, SCRAMBLER
Figure 5-700

81J05 700

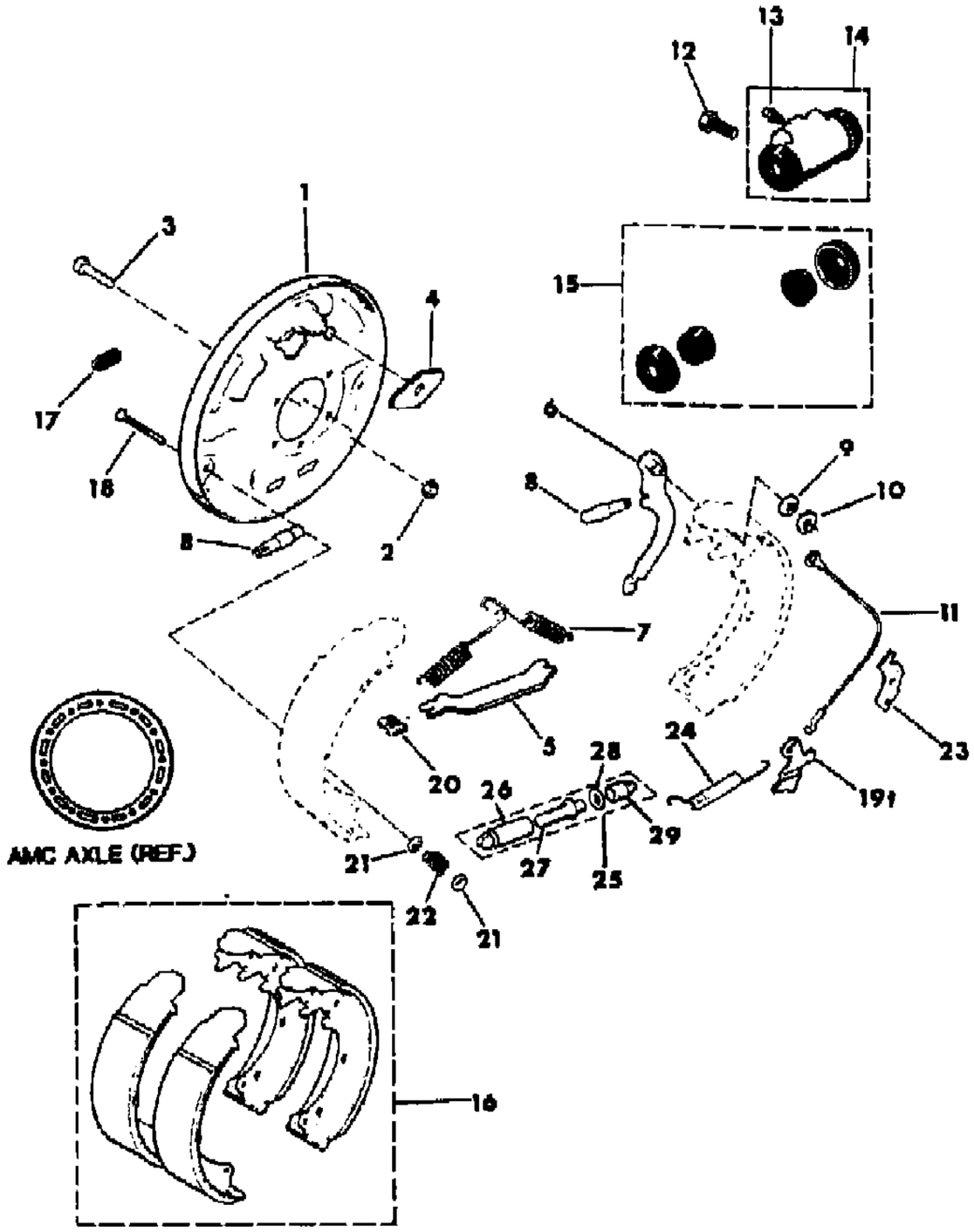

ITEM	PART NUMBER	QTY	BODY	MODEL	DESCRIPTION
	J320 1918	1			Right
	J320 1917	1			Left
27					SCREW
	J320 1023	1			Right
	J320 1022	1			Left
28	J099 8354	2			WASHER
29	J320 7638	2			SOCKET

MODEL CODES

16=Cherokee 2 Dr.(1981-83)
17=Cherokee 2 Dr.(1981-83)
73=Cherokee 2WD-2 Dr.(1984-86)
74=Cherokee 2WD-4 Dr.(1984-86)
18=Cherokee 4 Dr.(1981-83)
77=Cherokee 4WD-2 Dr.(1984-86)
78=Cherokee 4WD-4 Dr.(1984-86)
85=CJ-5 (1981-83)
86=CJ-6(1981)
87=CJ-7(1981-86)
88=CJ-8, Scrambler(1981-86)
64=Comanche 2WD-6 Ft. Box(1986)
66=Comanche 2WD-7 Ft. Box(1986)
63=Comanche 4WD-6 Ft. Box(1986)
65=Comanche 4WD-7 Ft. Box(1986)
15=Grand Wagoneer 4 Dr.(1984-86)
25=J-10 Truck 7 Ft. Box(1981-84)
26=J10 Truck 8 Ft. Box(1981-86)
27=J-20 Truck 8 Ft. Box(1981-86)
15=Wagoneer 4 Dr.(1981-83)
75=Wagoneer 4WD-4 Dr.(1984-86)

BODY
CJ=CJ-5, CJ-6, CJ-7, CJ-8, Scrambler(1981-86)
MJ=Comanche Pickup(1986)

STYLES
SJ=Wagoneer(1981-83), Grand Wagoneer(1984-86), Cherokee(1981-83), J-10, J-20(1981-86)
XJ=Wagoneer(1984-86), Cherokee(1984-86)

AR = Use as Required - = Non Illustrated Part P.A.R. = Paint as Required

« RETURN TO GROUP INDEX

BRAKES, REAR DANA MODEL 44 AXLE CJ-7,8, SCRAMBLER
Figure 5-800

81J05 800

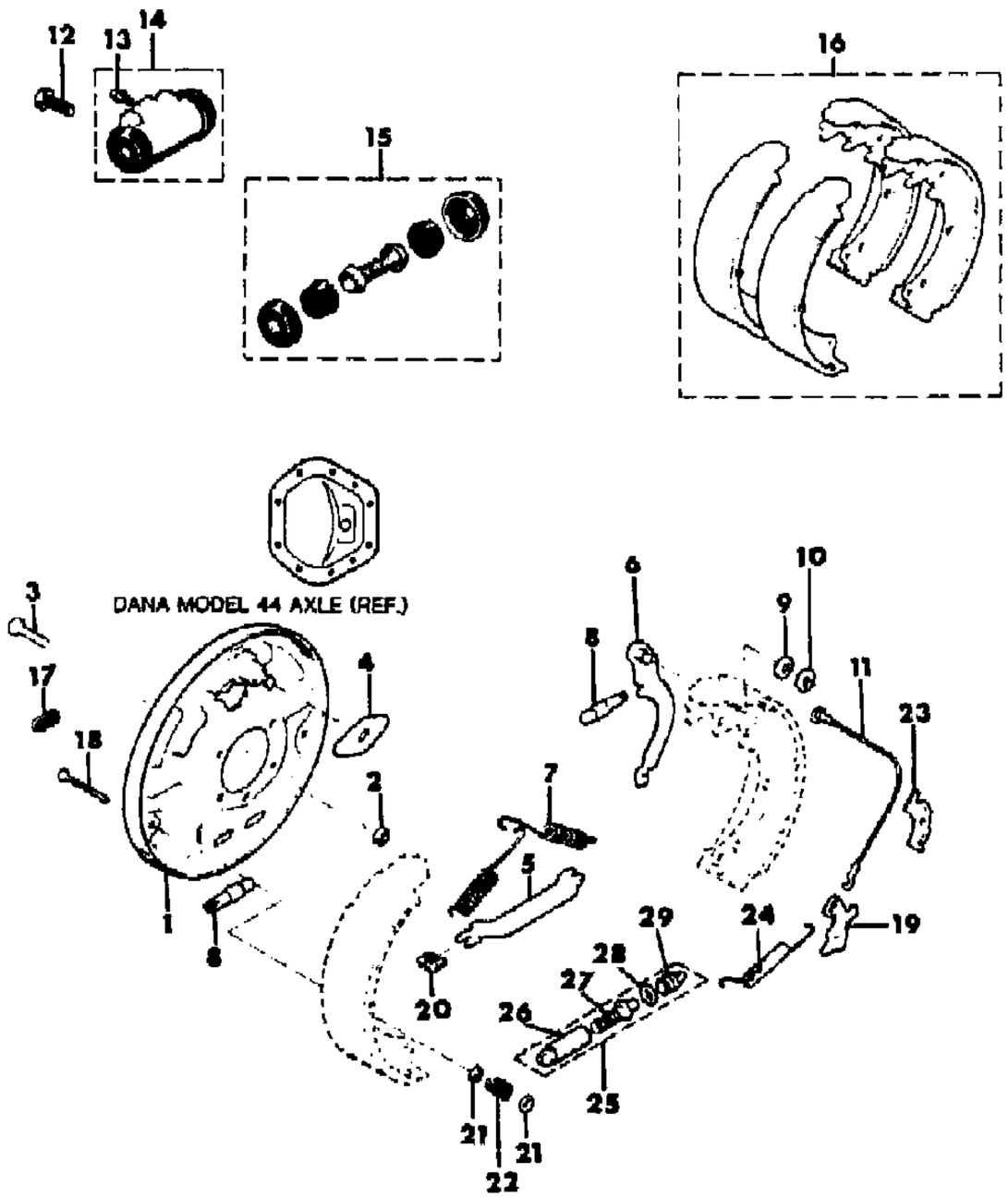

ITEM	PART NUMBER	QTY	BODY	MODEL	DESCRIPTION
1					PLATE, Backing
	8350 2984	1			Right
	8350 2985	1			Left
2	J941 1783	8			NUT
3	J099 4313	8			BOLT
4	J320 1032	2			PLATE, Guide
5	J311 2778	2			STRUT, Parking Brake
6					LEVER, Parking Brake
	J320 1034	1			Right
	J320 1033	1			Left
7	J311 2780	4			SPRING, Return
8	J004 8331	4			LINK, Cylinder
9	J310 8203	2			WASHER
10	J310 8202	2			RETAINER
11	J320 1027	2			CABLE, Adjuster
12	J448 6551	4			BOLT
13	J320 3313	2			SCREW, Bleeder
14					CYLINDER, Wheel
	5200 0848	1			Right
	5200 0849	1			Left
15	8350 0987	2			REPAIR PACKAGE, Wheel Cylinder
16					SHOE PACKAGE ***
	8350 2986	1			EXPORT
	JR77 5074	1			Remanufactured
17	J320 1957	4			PLUG
18	J314 3612	4			PIN
19					LEVER, Adjuster
	J320 1030	1			Right
	J320 1029	1			Left
20	8350 4310	2			SPRING
21	J008 9259	8			CUP
22	J320 5979	4			SPRING
23	J320 1947	2			GUIDE, Cable
24	J320 1937	2			SPRING
25					ADJUSTER
	5200 1216	1			Right
	5200 1215	1			Left
26					NUT
	J320 1918	1			Right

MODEL CODES
16=Cherokee 2 Dr.(1981-83)
17=Cherokee 2 Dr.(1981-83)
73=Cherokee 2WD-2 Dr.(1984-86)
74=Cherokee 2WD-4 Dr.(1984-86)
18=Cherokee 4 Dr.(1981-83)
77=Cherokee 4WD-2 Dr.(1984-86)
78=Cherokee 4WD-4 Dr.(1984-86)
85=CJ-5 (1981-83)
86=CJ-6(1981)
87=CJ-7(1981-86)
88=CJ-8, Scrambler(1981-86)
64=Comanche 2WD-6 Ft. Box(1986)
66=Comanche 2WD-7 Ft. Box(1986)
63=Comanche 4WD-6 Ft. Box(1986)
65=Comanche 4WD-7 Ft. Box(1986)
15=Grand Wagoneer 4 Dr.(1984-86)
25=J-10 Truck 7 Ft. Box(1981-84)
26=J10 Truck 8 Ft. Box(1981-86)
27=J-20 Truck 8 Ft. Box(1981-86)
15=Wagoneer 4 Dr.(1981-83)
75=Wagoneer 4WD-4 Dr.(1984-86)

BODY
CJ=CJ-5, CJ-6, CJ-7, CJ-8, Scrambler(1981-86)
MJ=Comanche Pickup(1986)

STYLES
SJ=Wagoneer(1981-83), Grand Wagoneer(1984-86), Cherokee(1981-83), J-10, J-20(1981-86)
XJ=Wagoneer(1984-86), Cherokee(1984-86)

AR = Use as Required - = Non Illustrated Part P.A.R. = Paint as Required

81J05 800

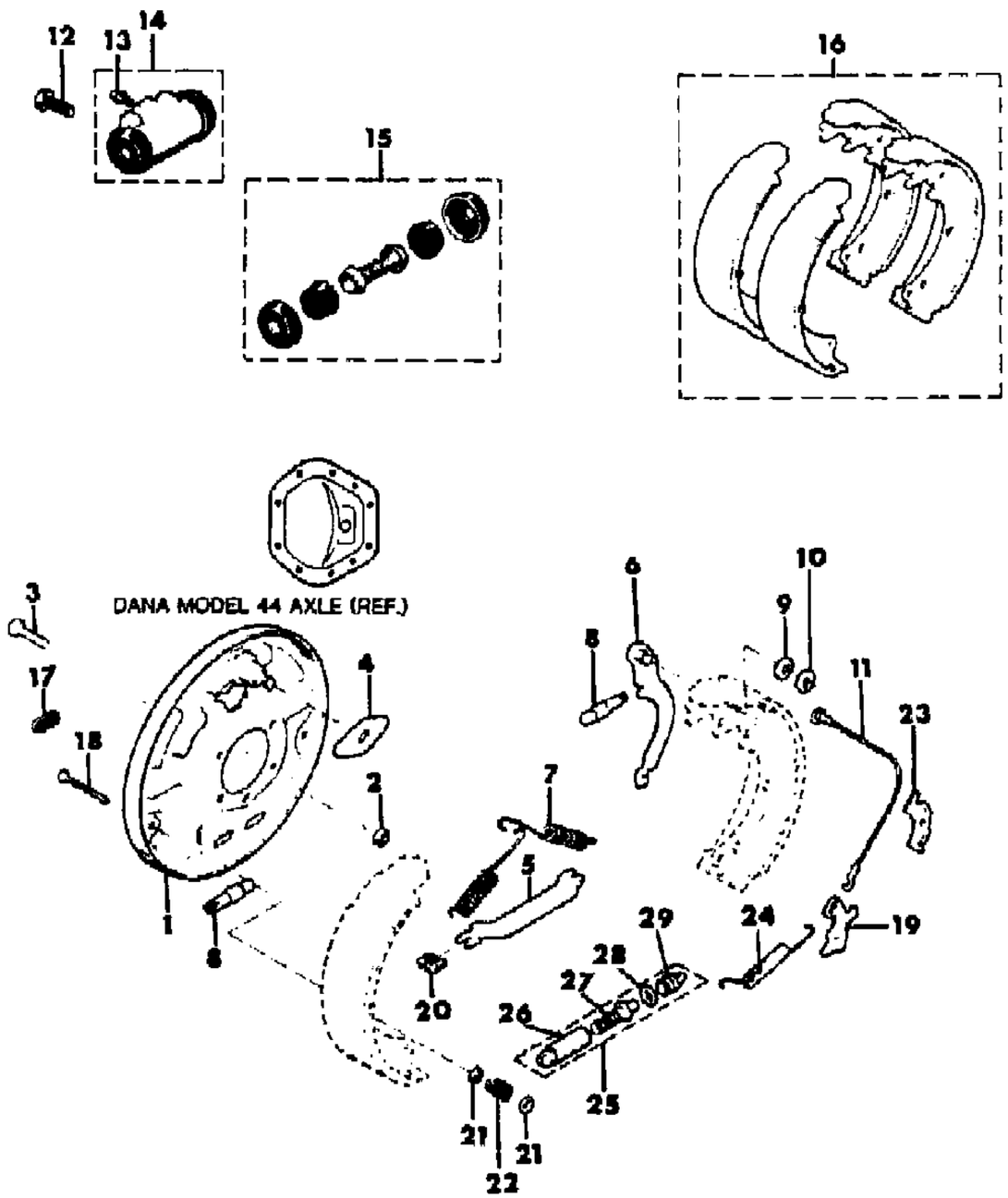

ITEM	PART NUMBER	QTY	BODY	MODEL	DESCRIPTION
	J320 1917	1			Left
27					SCREW
	J320 1023	1			Right
	J320 1022	1			Left
28	J099 8354	2			WASHER
29	J320 7638	2			SOCKET

MODEL CODES
16=Cherokee 2 Dr.(1981-83)
17=Cherokee 2 Dr.(1981-83)
73=Cherokee 2WD-2 Dr.(1984-86)
74=Cherokee 2WD-4 Dr.(1984-86)
18=Cherokee 4 Dr.(1981-83)
77=Cherokee 4WD-2 Dr.(1984-86)
78=Cherokee 4WD-4 Dr.(1984-86)
85=CJ-5 (1981-83)
86=CJ-6(1981)
87=CJ-7(1981-86)
88=CJ-8, Scrambler(1981-86)
64=Comanche 2WD-6 Ft. Box(1986)
66=Comanche 2WD-7 Ft. Box(1986)
63=Comanche 4WD-6 Ft. Box(1986)
65=Comanche 4WD-7 Ft. Box(1986)
15=Grand Wagoneer 4 Dr.(1984-86)
25=J-10 Truck 7 Ft. Box(1981-84)
26=J10 Truck 8 Ft. Box(1981-86)
27=J-20 Truck 8 Ft. Box(1981-86)
15=Wagoneer 4 Dr.(1981-83)
75=Wagoneer 4WD-4 Dr.(1984-86)

BODY
CJ=CJ-5, CJ-6, CJ-7, CJ-8, Scrambler(1981-86)
MJ=Comanche Pickup(1986)

STYLES
SJ=Wagoneer(1981-83), Grand Wagoneer(1984-86), Cherokee(1981-83), J-10, J-20(1981-86)
XJ=Wagoneer(1984-86), Cherokee(1984-86)

AR = Use as Required - = Non Illustrated Part P.A.R. = Paint as Required

DRUM, BRAKE CJ-5,6,7,8, SCRAMBLER
Figure 5-900

81J05 900

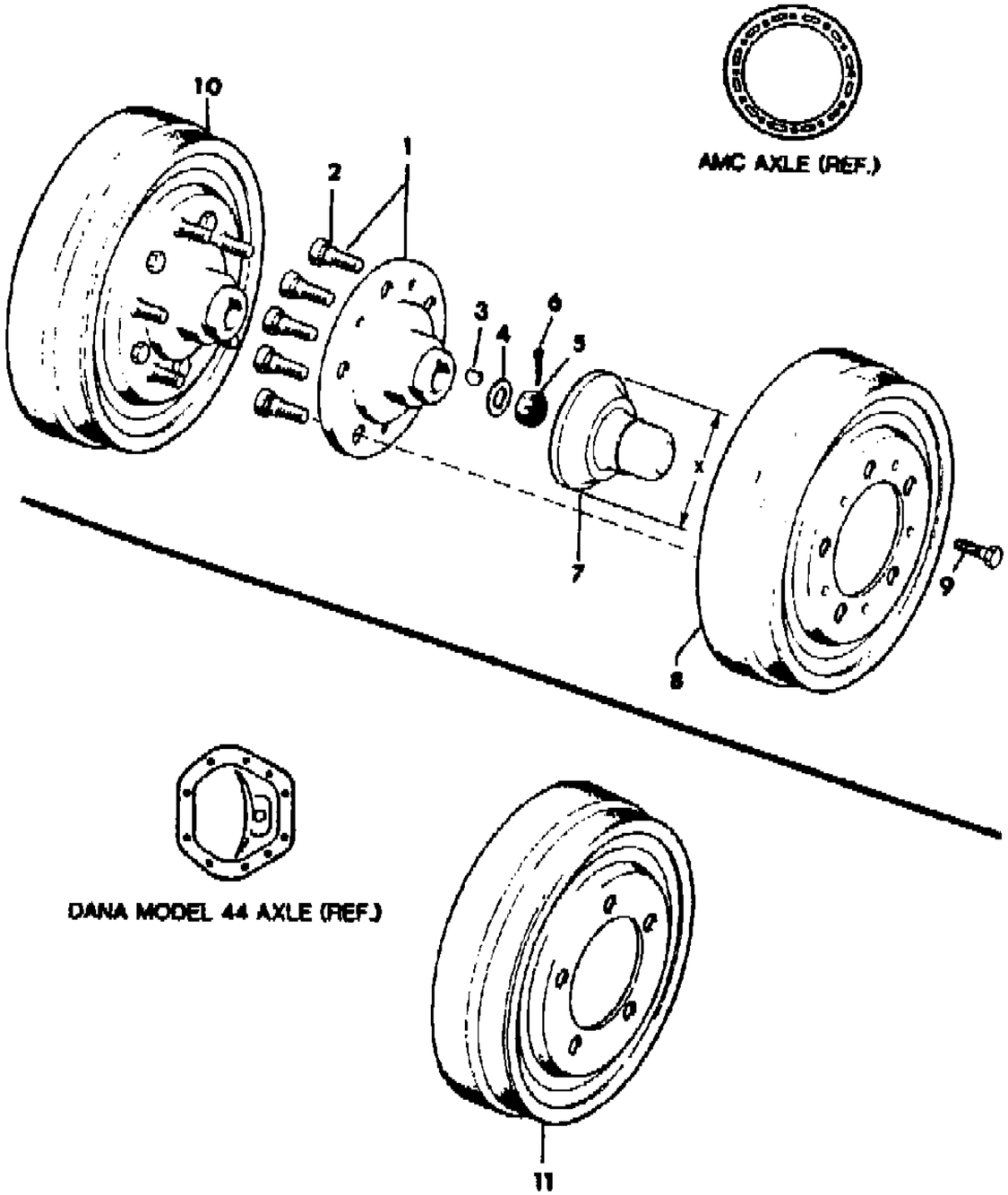

ITEM	PART NUMBER	QTY	BODY	MODEL	DESCRIPTION
1					HUB ASSEMBLY ***
	J535 5715	1			With 2.5" Grease Cap
	J813 3730	1			With 4.12" Grease Cap
2	J535 5719	10			STUD
3	J010 3905	2			KEY
4	J001 8737	2			WASHER
5	J315 5675	2			NUT, Castle
6	J010 3387	2			PIN, Cotter
7					CAP, Grease
	J535 5749	2			With 2.5" Grease Cap
	J536 2142	2			With 4.12" Grease Cap
8	J535 9028	2			DRUM, Brake
9					BOLT
	J400 3592	6			Hexhead
	J015 6249	6			Flathead
10					HUB AND DRUM ASSEMBLY ***
	J535 9029	2			With 2.5" Grease Cap
	J813 3731	2			With 4.12" Grease Cap
11	5200 2952	2			DRUM, Brake

MODEL CODES

16=Cherokee 2 Dr.(1981-83)
17=Cherokee 2 Dr.(1981-83)
73=Cherokee 2WD-2 Dr.(1984-86)
74=Cherokee 2WD-4 Dr.(1984-86)
18=Cherokee 4 Dr.(1981-83)
77=Cherokee 4WD-2 Dr.(1984-86)
78=Cherokee 4WD-4 Dr.(1984-86)
85=CJ-5 (1981-83)
86=CJ-6(1981)
87=CJ-7(1981-86)
88=CJ-8, Scrambler(1981-86)
64=Comanche 2WD-6 Ft. Box(1986)
66=Comanche 2WD-7 Ft. Box(1986)
63=Comanche 4WD-6 Ft. Box(1986)
65=Comanche 4WD-7 Ft. Box(1986)
15=Grand Wagoneer 4 Dr.(1984-86)
25=J-10 Truck 7 Ft. Box(1981-84)
26=J10 Truck 8 Ft. Box(1981-86)
27=J-20 Truck 8 Ft. Box(1981-86)
15=Wagoneer 4 Dr.(1981-83)
75=Wagoneer 4WD-4 Dr.(1984-86)

BODY
CJ=CJ-5, CJ-6, CJ-7, CJ-8, Scrambler(1981-86)
MJ=Comanche Pickup(1986)

STYLES
SJ=Wagoneer(1981-83), Grand Wagoneer(1984-86), Cherokee(1981-83), J-10, J-20(1981-86)
XJ=Wagoneer(1984-86), Cherokee(1984-86)

AR = Use as Required - = Non Illustrated Part P.A.R. = Paint as Required

« RETURN TO GROUP INDEX

PEDAL, BRAKE XJ CHEROKEE, XJ WAGONEER COMANCHE
Figure 5-1000

81J05 1000

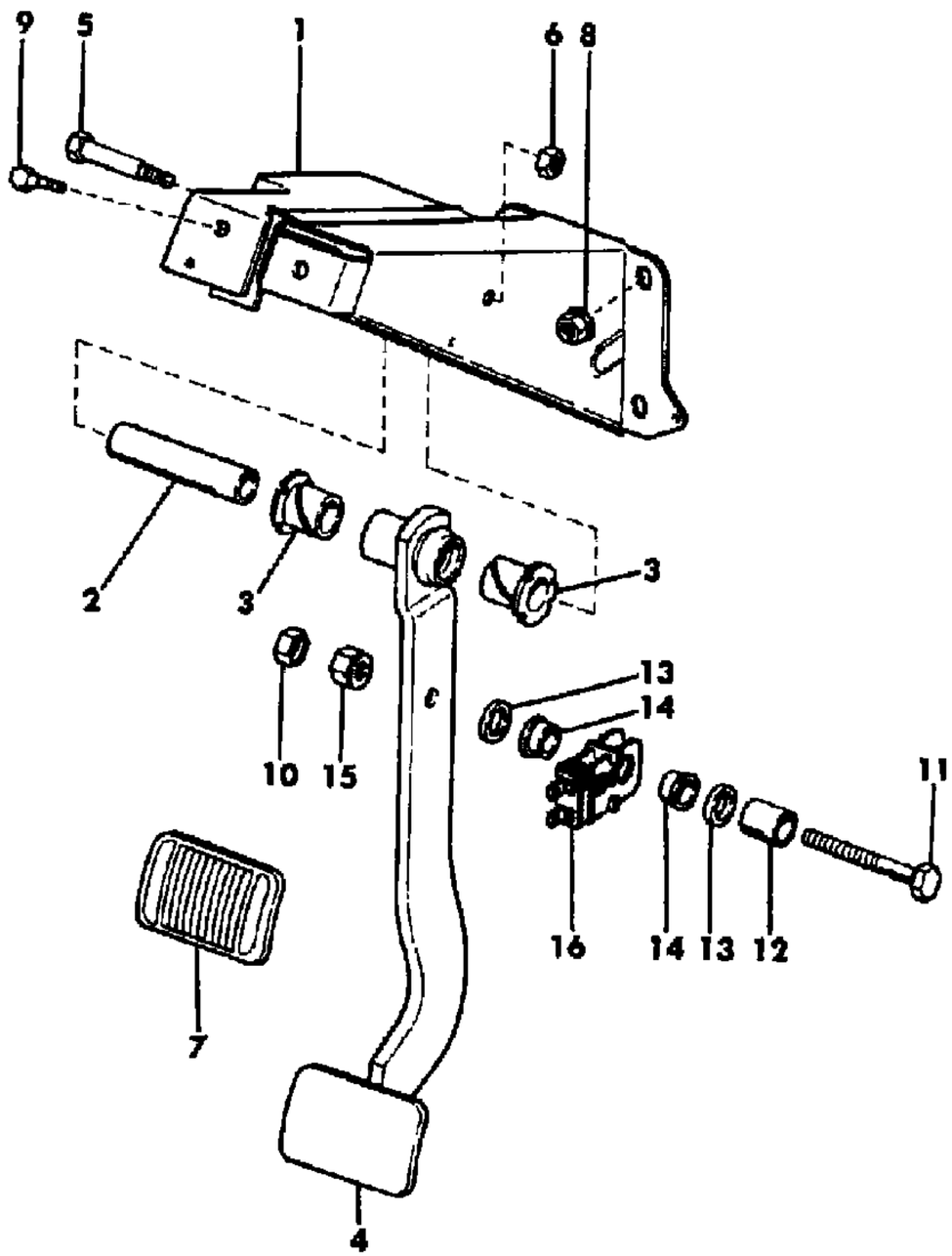

ITEM	PART NUMBER	QTY	BODY	MODEL	DESCRIPTION
1					BRACKET, Pedal
					1984-85
	5200 0393	1			With Automatic Transmission
	5200 0394	1			With Manual Transmission
					1986
	5200 0394	1			With Floor Gear Shift
	5200 2629	1			With Column Gear Shift
2	5300 0637	1			SLEEVE
3	J322 5981	2			BUSHING
4					PEDAL, Brake
	5200 0091	1			With Automatic Transmission
					With Manual Transmission
	5200 0092	1			1984-85: U.S., CANADA
	5200 2615	1			1986: U.S., CANADA
	5200 1802	1			1984-85: EXPORT
	5200 2619	1			1986: EXPORT
5					BOLT
	1150 0847	1			With Automatic Transmission
	3420 1515	1			With Manual Transmission
6	1150 1039	1			NUT
7					PAD, Pedal
	5200 2749	1			With Automatic Transmission
	5200 2750	1			With Manual Transmission
8	J400 3909	4			NUT
9	1150 2685	2			BOLT
10	J942 0166	1			NUT
11	J400 4486	1			BOLT
12	J321 5928	1			SLEEVE
13	J321 5924	2			SPACER
14	J321 5922	2			BUSHING
15	J400 5311	1			NUT
16					SWITCH, Brake Lamp
	J322 5787	1			With Cruise Control
	J321 5938	1			Without Cruise Control

MODEL CODES

16=Cherokee 2 Dr.(1981-83)
17=Cherokee 2 Dr.(1981-83)
73=Cherokee 2WD-2 Dr.(1984-86)
74=Cherokee 2WD-4 Dr.(1984-86)
18=Cherokee 4 Dr.(1981-83)
77=Cherokee 4WD-2 Dr.(1984-86)
78=Cherokee 4WD-4 Dr.(1984-86)
85=CJ-5 (1981-83)
86=CJ-6(1981)
87=CJ-7(1981-86)
88=CJ-8, Scrambler(1981-86)
64=Comanche 2WD-6 Ft. Box(1986)
66=Comanche 2WD-7 Ft. Box(1986)
63=Comanche 4WD-6 Ft. Box(1986)
65=Comanche 4WD-7 Ft. Box(1986)
15=Grand Wagoneer 4 Dr.(1984-86)
25=J-10 Truck 7 Ft. Box(1981-84)
26=J10 Truck 8 Ft. Box(1981-86)
27=J-20 Truck 8 Ft. Box(1981-86)
15=Wagoneer 4 Dr.(1981-83)
75=Wagoneer 4WD-4 Dr.(1984-86)

BODY
CJ=CJ-5, CJ-6, CJ-7, CJ-8, Scrambler(1981-86)
MJ=Comanche Pickup(1986)

STYLES
SJ=Wagoneer(1981-83), Grand Wagoneer(1984-86), Cherokee(1981-83), J-10, J-20(1981-86)
XJ=Wagoneer(1984-86), Cherokee(1984-86)

AR = Use as Required - = Non Illustrated Part P.A.R. = Paint as Required

« RETURN TO GROUP INDEX

VACUUM PUMP POWER BRAKES 2.1L DIESEL
Figure 5-1100

81J05 1100

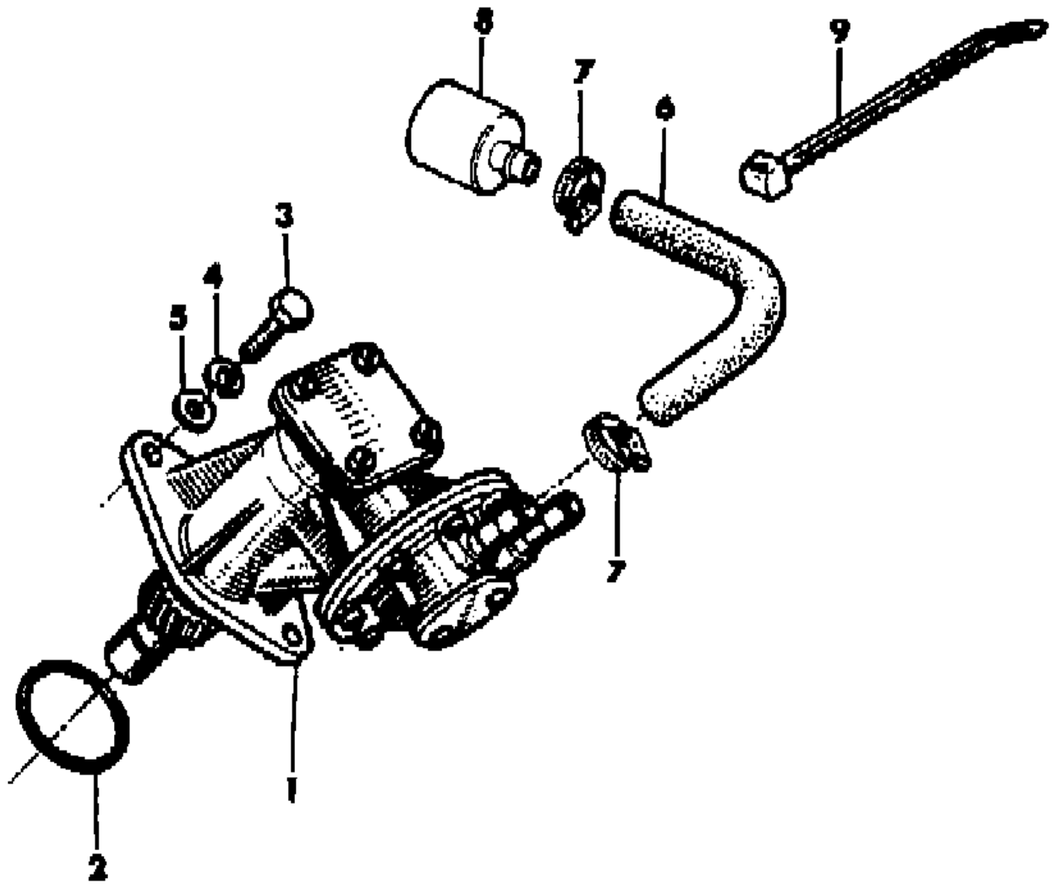

ITEM	PART NUMBER	QTY	BODY	MODEL	DESCRIPTION
1	T067 9259	1			PUMP, Vacuum
2	T306 5067	1			SEAL
3	T300 1142	2			BOLT
4	T305 5031	2			WASHER, Lock
5	T305 3074	2			WASHER, Flat
6	5300 2575	1			HOSE
7	J320 3076	2			CLAMP
8	5300 2574	1			SILENCER, Vacuum Pump
9	J322 3227	1			STRAP

MODEL CODES

16=Cherokee 2 Dr.(1981-83)
17=Cherokee 2 Dr.(1981-83)
73=Cherokee 2WD-2 Dr.(1984-86)
74=Cherokee 2WD-4 Dr.(1984-86)
18=Cherokee 4 Dr.(1981-83)
77=Cherokee 4WD-2 Dr.(1984-86)
78=Cherokee 4WD-4 Dr.(1984-86)
85=CJ-5 (1981-83)
86=CJ-6(1981)
87=CJ-7(1981-86)
88=CJ-8, Scrambler(1981-86)
64=Comanche 2WD-6 Ft. Box(1986)
66=Comanche 2WD-7 Ft. Box(1986)
63=Comanche 4WD-6 Ft. Box(1986)
65=Comanche 4WD-7 Ft. Box(1986)
15=Grand Wagoneer 4 Dr.(1984-86)
25=J-10 Truck 7 Ft. Box(1981-84)
26=J10 Truck 8 Ft. Box(1981-86)
27=J-20 Truck 8 Ft. Box(1981-86)
15=Wagoneer 4 Dr.(1981-83)
75=Wagoneer 4WD-4 Dr.(1984-86)

BODY
CJ=CJ-5, CJ-6, CJ-7, CJ-8, Scrambler(1981-86)
MJ=Comanche Pickup(1986)

STYLES
SJ=Wagoneer(1981-83), Grand Wagoneer(1984-86), Cherokee(1981-83), J-10, J-20(1981-86)
XJ=Wagoneer(1984-86), Cherokee(1984-86)

AR = Use as Required - = Non Illustrated Part P.A.R. = Paint as Required

« RETURN TO GROUP INDEX

BOOSTER AND MASTER CYLINDER U.S. AND CANADA XJ CHEROKEE, XJ WAGONEER, COMANCHE
Figure 5-1200

81J05 1200

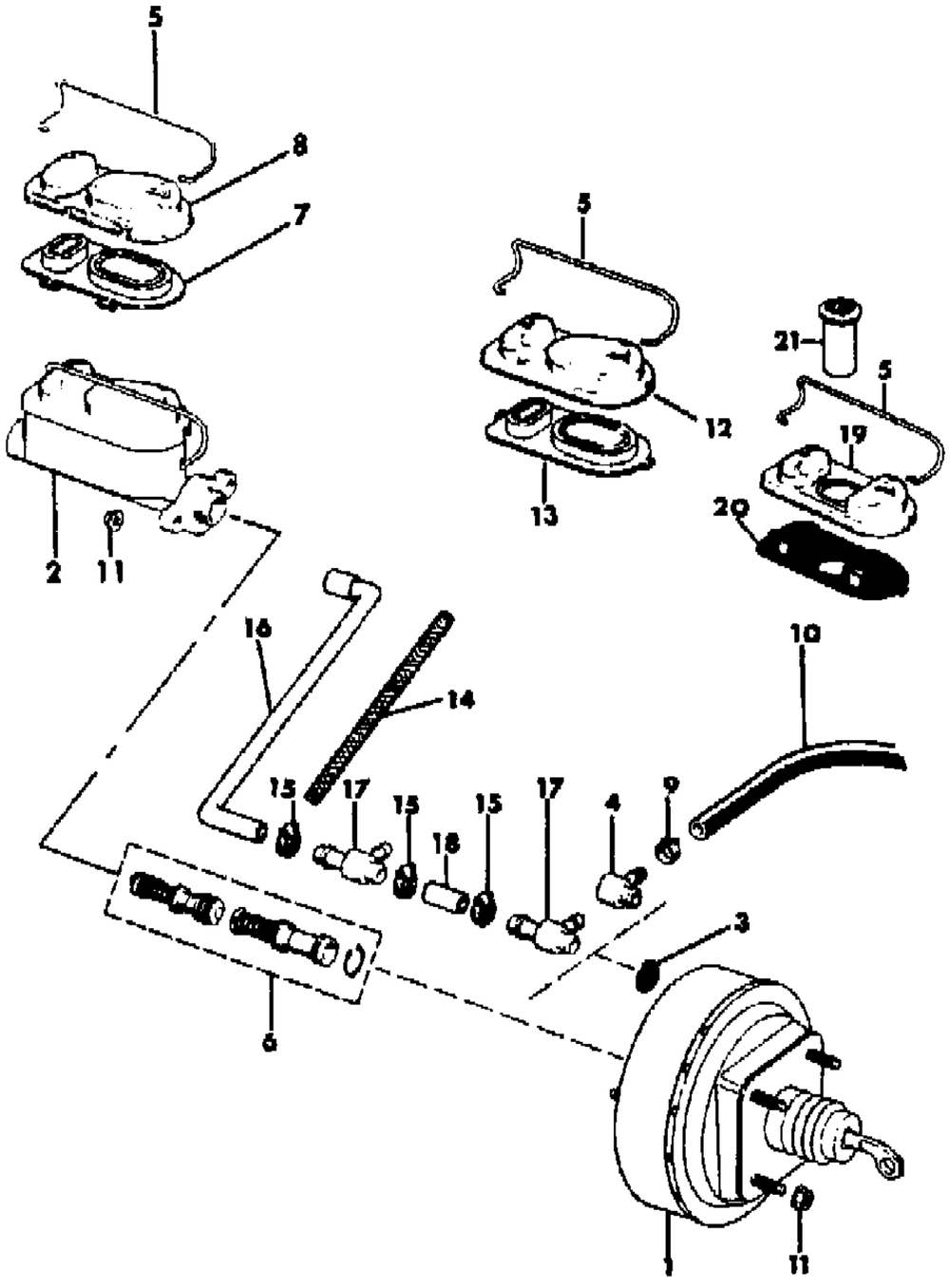

ITEM	PART NUMBER	QTY	BODY	MODEL	DESCRIPTION
1					BOOSTER, Brake
	8350 1196	1			Gas Engine
	8350 1534	1			Diesel Engine
2					CYLINDER, Brake Master
	5200 0657	1			With System Sentry
	J324 1807	1			Without System Sentry
3	J320 8510	1			GROMMET, Valve
4	J448 7455	1			VALVE, Check, Gas Engine
5	J813 3910	1			RETAINER
6	8351 0015	1			REPAIR PACKAGE, Master Cylinder
7	8350 4455	1			GASKET
8	8350 4454	1			COVER
9					CLAMP
	J320 3076	1			Gas Engine
	J321 9466	1			Diesel Engine
10					HOSE, Vacuum
					Four Cylinder Gas Engine
	J324 2729	1			1984-85
	5200 2715	1			1986
	J812 5883	1			Six Cylinder Engine
	J812 5883	1			Diesel Engine
11	J400 3909	6			NUT
12	J813 3911	1			COVER
13	J813 3912	1			GASKET
14	3200 1056	1			SLEEVE
15	3300 0784	3			CLAMP
16	5200 1783	1			HOSE, Vacuum
17	8350 1532	2			VALVE, Check, Diesel Engine
18	5200 2458	1			CONNECTOR
19	5200 1018	1			COVER
20	5200 1019	1			GASKET
21	5200 0658	1			SENSOR, Brake Fluid Level, System Sentry

MODEL CODES

16=Cherokee 2 Dr.(1981-83)
17=Cherokee 2 Dr.(1981-83)
73=Cherokee 2WD-2 Dr.(1984-86)
74=Cherokee 2WD-4 Dr.(1984-86)
18=Cherokee 4 Dr.(1981-83)
77=Cherokee 4WD-2 Dr.(1984-86)
78=Cherokee 4WD-4 Dr.(1984-86)
85=CJ-5 (1981-83)
86=CJ-6(1981)
87=CJ-7(1981-86)
88=CJ-8, Scrambler(1981-86)
64=Comanche 2WD-6 Ft. Box(1986)
66=Comanche 2WD-7 Ft. Box(1986)
63=Comanche 4WD-6 Ft. Box(1986)
65=Comanche 4WD-7 Ft. Box(1986)
15=Grand Wagoneer 4 Dr.(1984-86)
25=J-10 Truck 7 Ft. Box(1981-84)
26=J10 Truck 8 Ft. Box(1981-86)
27=J-20 Truck 8 Ft. Box(1981-86)
15=Wagoneer 4 Dr.(1981-83)
75=Wagoneer 4WD-4 Dr.(1984-86)

BODY
CJ=CJ-5, CJ-6, CJ-7, CJ-8, Scrambler(1981-86)
MJ=Comanche Pickup(1986)

STYLES
SJ=Wagoneer(1981-83), Grand Wagoneer(1984-86), Cherokee(1981-83), J-10, J-20(1981-86)
XJ=Wagoneer(1984-86), Cherokee(1984-86)

AR = Use as Required - = Non Illustrated Part P.A.R. = Paint as Required

« RETURN TO GROUP INDEX

BOOSTER AND MASTER CYLINDER EXPORT XJ CHEROKEE, XJ WAGONEER, COMANCHE
Figure 5-1300

81J05 1300

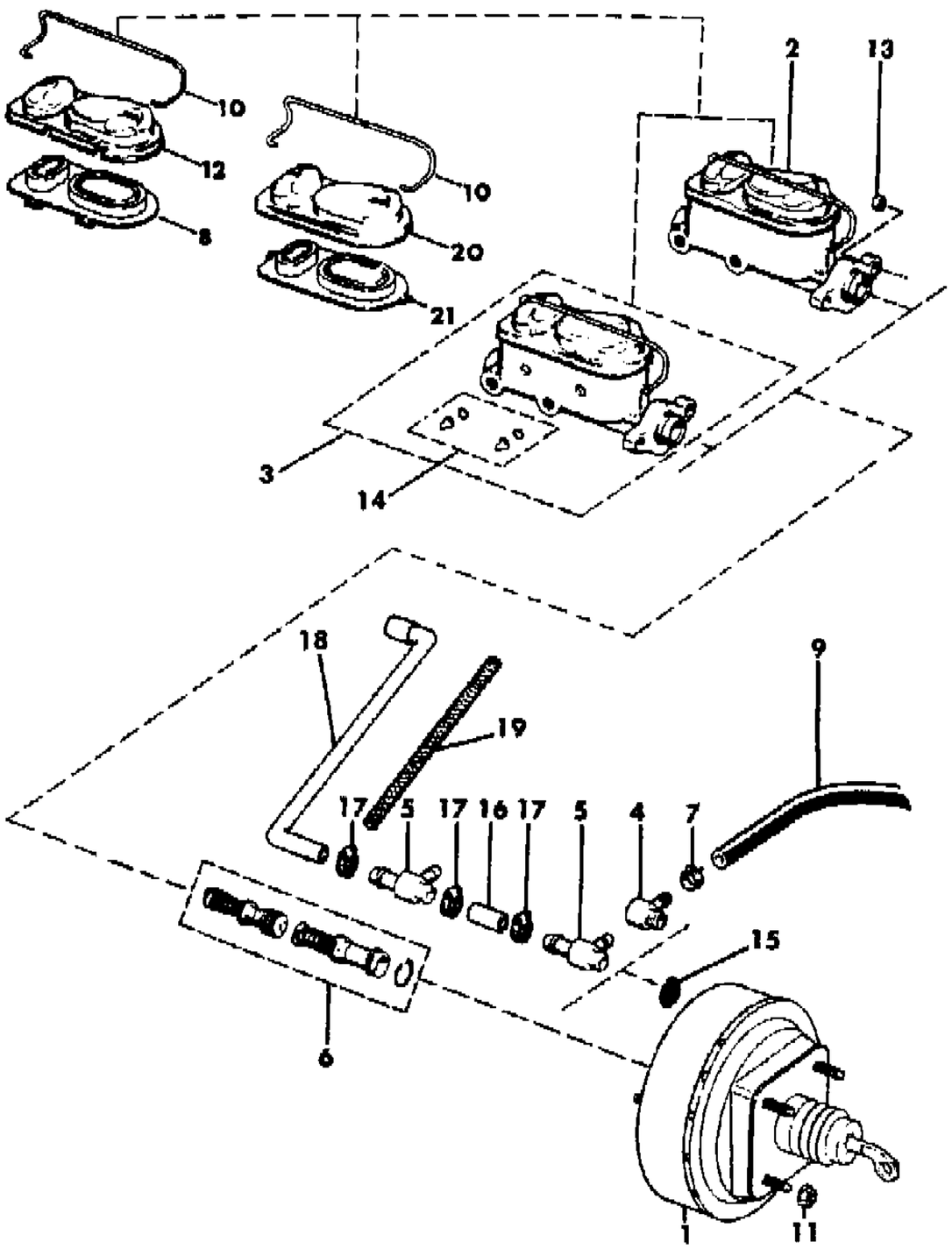

ITEM	PART NUMBER	QTY	BODY	MODEL	DESCRIPTION
1					BOOSTER, Brake
	8350 1533	1			Gas Engine
					Diesel Engine
	8350 1535	1			Economic Commission of Europe
	8350 1534	1			Non-Regulated Markets
2					CYLINDER, Brake Master
	J324 1807	1			Diesel Engine, Non-Regulated Markets
3					CYLINDER, Brake Master
					Economic Commission of Europe
	J324 1805	1			Gas Engine
	5200 0973	1			Diesel Engine
4	J448 7455	1			VALVE, Check, Gas Engine
5	8350 1532	1			VALVE, Check, Diesel Engine
6	8351 0015	1			REPAIR PACKAGE, Master Cylinder
7					CLAMP
	J320 3076	1			Gas Engine
	J321 9466	1			Diesel Engine
8	8350 4455	1			GASKET
9					HOSE
					Four Cylinder Engine
	5200 2715	1			Economic Commission of Europe
	J324 2729	1			Non-Regulated Markets
	J812 5883	1			Six Cylinder Engine
	J812 5883	1			Diesel Engine
10	J813 3910	1			RETAINER
11	J400 3909	4			NUT
12	8350 4454	1			COVER
13	J400 3909	2			NUT
14	8350 0142	1			GLASS, Sight, Economic Commission of Europe
15	J320 8510	1			GROMMET
16	5200 2458	1			CONNECTOR
17	3300 0784	3			CLAMP
18	5200 1783	1			HOSE, Vacuum
19	3200 1056	1			SLEEVE
20	J813 3911	1			COVER
21	J813 3912	1			GASKET

MODEL CODES

16=Cherokee 2 Dr.(1981-83)
17=Cherokee 2 Dr.(1981-83)
73=Cherokee 2WD-2 Dr.(1984-86)
74=Cherokee 2WD-4 Dr.(1984-86)
18=Cherokee 4 Dr.(1981-83)
77=Cherokee 4WD-2 Dr.(1984-86)
78=Cherokee 4WD-4 Dr.(1984-86)
85=CJ-5 (1981-83)
86=CJ-6(1981)
87=CJ-7(1981-86)
88=CJ-8, Scrambler(1981-86)
64=Comanche 2WD-6 Ft. Box(1986)
66=Comanche 2WD-7 Ft. Box(1986)
63=Comanche 4WD-6 Ft. Box(1986)
65=Comanche 4WD-7 Ft. Box(1986)
15=Grand Wagoneer 4 Dr.(1984-86)
25=J-10 Truck 7 Ft. Box(1981-84)
26=J10 Truck 8 Ft. Box(1981-86)
27=J-20 Truck 8 Ft. Box(1981-86)
15=Wagoneer 4 Dr.(1981-83)
75=Wagoneer 4WD-4 Dr.(1984-86)

BODY
CJ=CJ-5, CJ-6, CJ-7, CJ-8, Scrambler(1981-86)
MJ=Comanche Pickup(1986)

STYLES
SJ=Wagoneer(1981-83), Grand Wagoneer(1984-86), Cherokee(1981-83), J-10, J-20(1981-86)
XJ=Wagoneer(1984-86), Cherokee(1984-86)

AR = Use as Required - = Non Illustrated Part P.A.R. = Paint as Required

« RETURN TO GROUP INDEX

LINES AND HOSES, BRAKE U. S. AND CANADA XJ CHEROKEE, XJ WAGONEER, COMANCHE
Figure 5-1400

81J05 1400

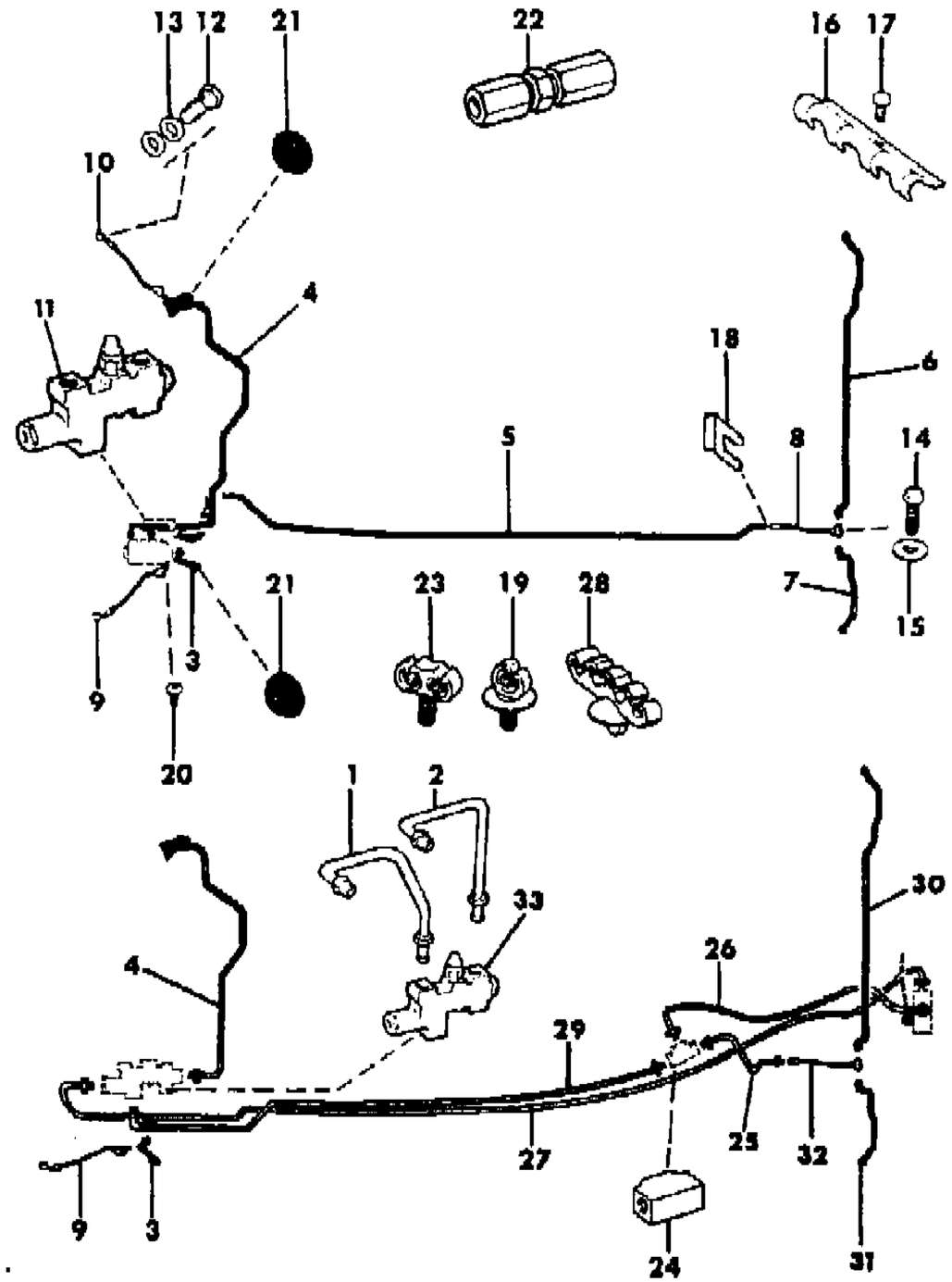

ITEM	PART NUMBER	QTY	BODY	MODEL	DESCRIPTION
1	5200 0173	1			LINE, Brake
2	5200 0172	1			LINE, Brake
3	5200 0164	1			LINE, Brake
4	5200 0165	1			LINE, Brake
5	5200 0163	1		XJ	LINE, Brake
6	5200 0168	1		XJ	LINE, Brake
7	5200 0167	1		XJ	LINE, Brake
8	5200 0162	1		XJ	HOSE, Brake
9					HOSE, Brake
	5200 0161	1			1984-85
	5200 1405	1			1986
10					HOSE, Brake
	5200 0160	1			1984-85
	5200 1404	1			1986
11	5200 0097	1		XJ	VALVE, Proportioning
12	J400 6700	2			BOLT, Banjo
13	J323 6434	4			GASKET
14	3420 1610	1			BOLT
15	J400 1089	1			WASHER
16	J323 4854	1			CLIP
17	3420 1152	1			BOLT
18	J004 7774	1			CLIP
19	3200 0404	1			CLIP
20	1150 2764	2			SCREW
21	J312 6237	2			GROMMET
22	J812 6773	AR			UNION, Brake Line Repair
23	5200 2044	2			CLIP
24	J319 6997	1		MJ	TEE
25	5200 2368	1		MJ	LINE, Brake
26					LINE, Brake
	5200 2367	1		MJ	Type 1, See Group 5-1500
	5200 2960	1		MJ	Type 2, See Group 5-1500
27					LINE, Brake
	5200 2365	1		MJ	Type 1, See Group 5-1500
	5200 2959	1		MJ	Type 2, See Group 5-1500
28	5300 0585	1			CLIP
29	5200 2366	1		MJ	LINE, Brake
30					LINE, Brake
	5200 2362	1		MJ	With AMC or Dana Model 35 Axle

MODEL CODES
16=Cherokee 2 Dr.(1981-83)
17=Cherokee 2 Dr.(1981-83)
73=Cherokee 2WD-2 Dr.(1984-86)
74=Cherokee 2WD-4 Dr.(1984-86)
18=Cherokee 4 Dr.(1981-83)
77=Cherokee 4WD-2 Dr.(1984-86)
78=Cherokee 4WD-4 Dr.(1984-86)
85=CJ-5 (1981-83)
86=CJ-6(1981)
87=CJ-7(1981-86)
88=CJ-8, Scrambler(1981-86)
64=Comanche 2WD-6 Ft. Box(1986)
66=Comanche 2WD-7 Ft. Box(1986)
63=Comanche 4WD-6 Ft. Box(1986)
65=Comanche 4WD-7 Ft. Box(1986)
15=Grand Wagoneer 4 Dr.(1984-86)
25=J-10 Truck 7 Ft. Box(1981-84)
26=J10 Truck 8 Ft. Box(1981-86)
27=J-20 Truck 8 Ft. Box(1981-86)
15=Wagoneer 4 Dr.(1981-83)
75=Wagoneer 4WD-4 Dr.(1984-86)

BODY
CJ=CJ-5, CJ-6, CJ-7, CJ-8, Scrambler(1981-86)
MJ=Comanche Pickup(1986)

STYLES
SJ=Wagoneer(1981-83), Grand Wagoneer(1984-86), Cherokee(1981-83), J-10, J-20(1981-86)
XJ=Wagoneer(1984-86), Cherokee(1984-86)

AR = Use as Required - = Non Illustrated Part P.A.R. = Paint as Required

« RETURN TO GROUP INDEX »

81J05 1400

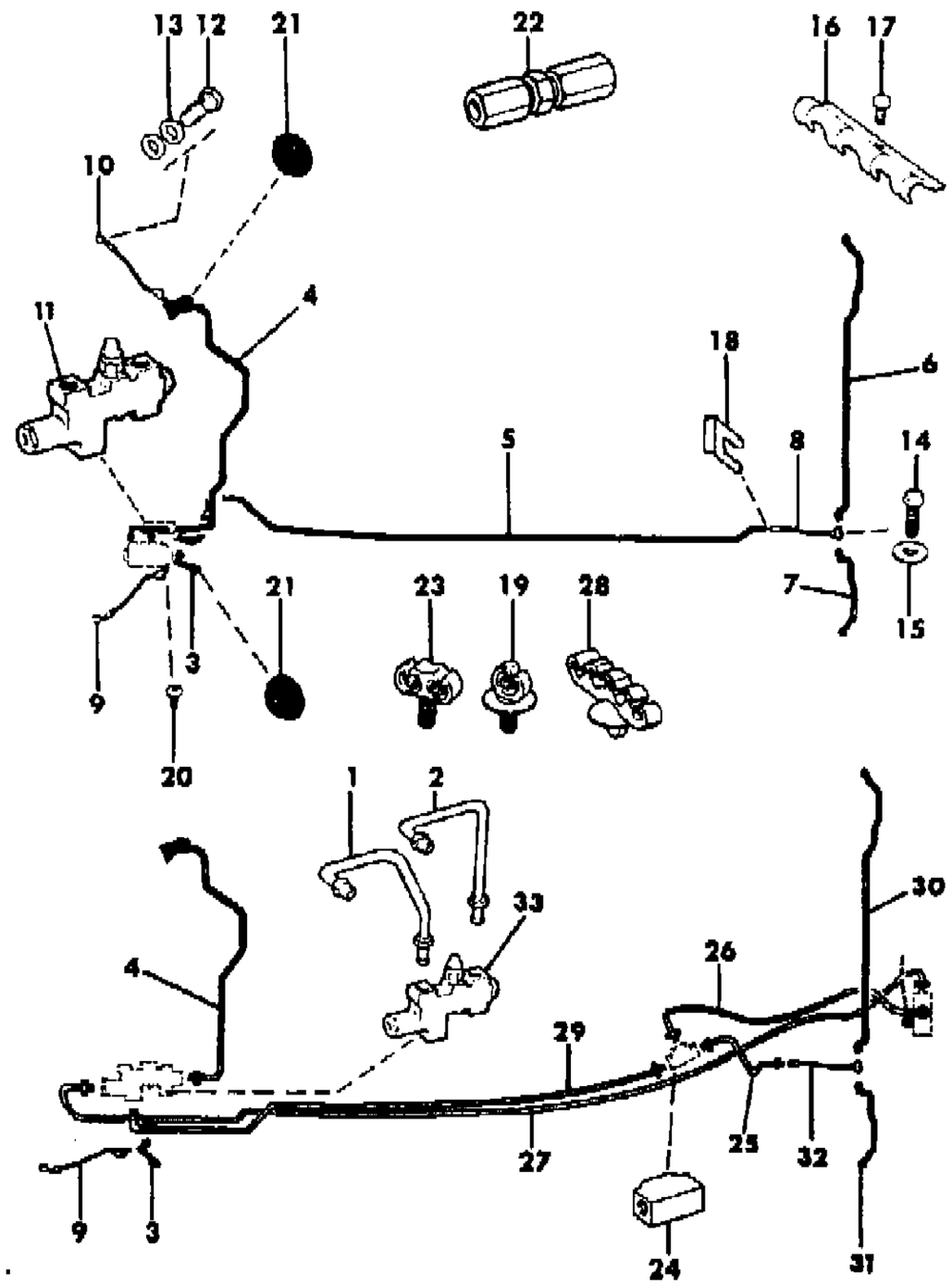

ITEM	PART NUMBER	QTY	BODY	MODEL	DESCRIPTION
	5200 2364	1		MJ	With AMC Large Axle
31					LINE, Brake
	5200 2363	1		MJ	With AMC or Dana Model 35 Axle
	5200 1918	1		MJ	With AMC Large Axle
32	5200 1917	1		MJ	HOSE, Brake
33	5200 2497	1		MJ	VALVE, Proportioning

MODEL CODES

16=Cherokee 2 Dr.(1981-83)	78=Cherokee 4WD-4 Dr.(1984-86)	64=Comanche 2WD-6 Ft. Box(1986)	25=J-10 Truck 7 Ft. Box(1981-84)
17=Cherokee 2 Dr.(1981-83)	85=CJ-5 (1981-83)	66=Comanche 2WD-7 Ft. Box(1986)	26=J10 Truck 8 Ft. Box(1981-86)
73=Cherokee 2WD-2 Dr.(1984-86)	86=CJ-6(1981)	63=Comanche 4WD-6 Ft. Box(1986)	27=J-20 Truck 8 Ft. Box(1981-86)
74=Cherokee 2WD-4 Dr.(1984-86)	87=CJ-7(1981-86)	65=Comanche 4WD-7 Ft. Box(1986)	15=Wagoneer 4 Dr.(1981-83)
18=Cherokee 4 Dr.(1981-83)	88=CJ-8, Scrambler(1981-86)	15=Grand Wagoneer 4 Dr.(1984-86)	75=Wagoneer 4WD-4 Dr.(1984-86)
77=Cherokee 4WD-2 Dr.(1984-86)			

BODY
CJ=CJ-5, CJ-6, CJ-7, CJ-8, Scrambler(1981-86)
MJ=Comanche Pickup(1986)

STYLES
SJ=Wagoneer(1981-83), Grand Wagoneer(1984-86), Cherokee(1981-83), J-10, J-20(1981-86)
XJ=Wagoneer(1984-86), Cherokee(1984-86)

AR = Use as Required - = Non Illustrated Part P.A.R. = Paint as Required

HEIGHT SENSING VALVE COMANCHE
Figure 5-1500

81J05 1500

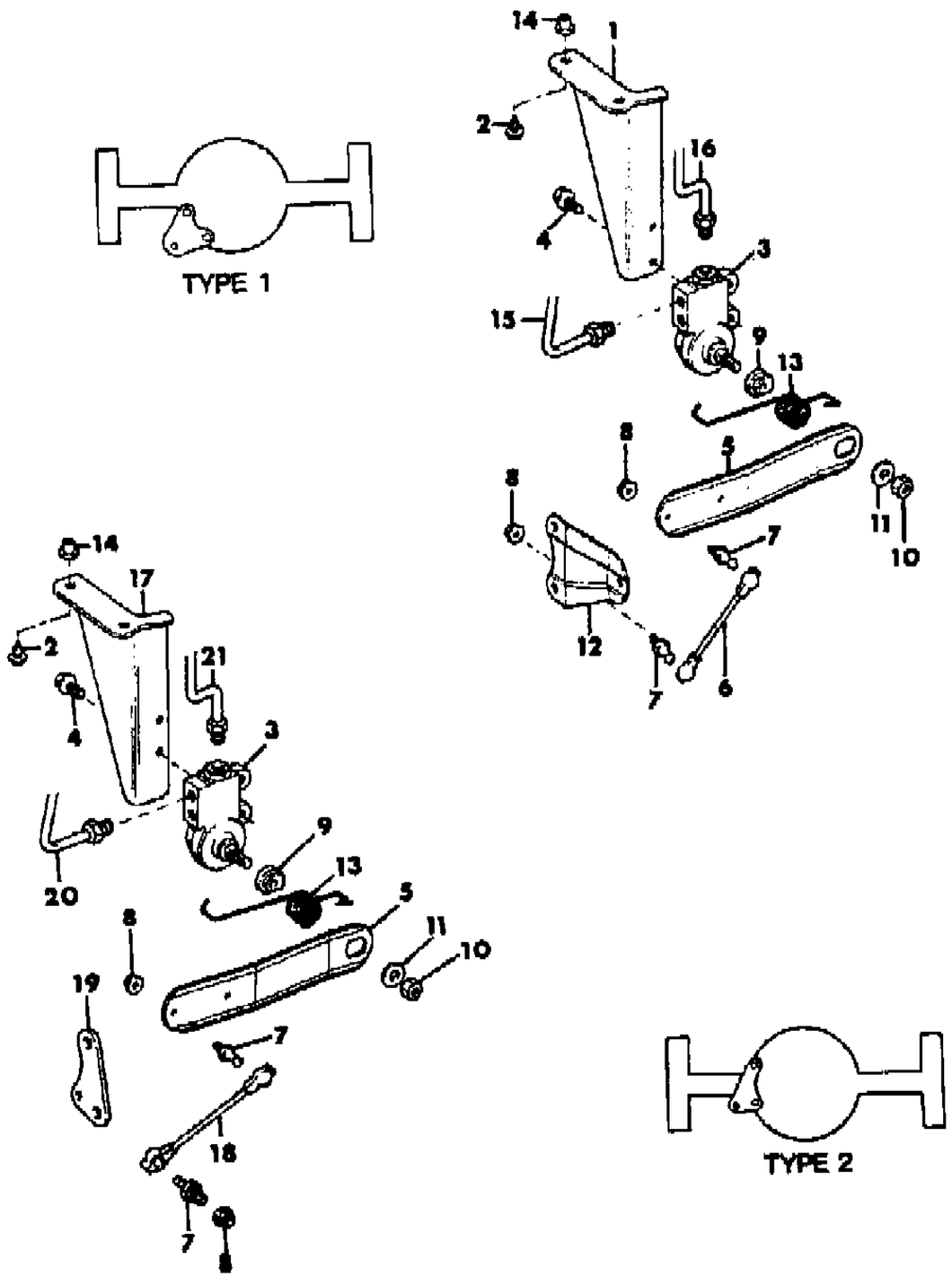

ITEM	PART NUMBER	QTY	BODY	MODEL	DESCRIPTION
1	5200 2496	1			BRACKET, Valve
2	3420 1756	2			BOLT
3	5200 2369	1			VALVE, Height Sensing
4	J942 3545	2			BOLT
5	5200 2931	1			LEVER
6					LINK
					Two Wheel Drive
	5200 2495	1			With AMC or Dana Model 35 Axle
	5200 2499	1			With AMC Large Axle
	5200 2499	1			Four Wheel Drive
7	J420 0415	2			STUD, Ball
8	J420 0453	2			NUT
9	5200 0782	1			BUSHING
10	J012 0376	1			NUT
11	J012 0393	1			WASHER
12					BRACKET
	5200 2370	1			With AMC or Dana Model 35 Axle
	5200 1652	1			With AMC Large Axle
13	5200 2736	1			SPRING
14	3420 1595	2			NUTSERT ***
15	5200 2365	1			LINE, Brake
16	5200 2367	1			LINE, Brake
17	5200 2961	1			BRACKET, Valve
18					LINK
					Two Wheel Drive
	5200 2964	1			With AMC or Dana Model 35 Axle
	5200 2965	1			With AMC Large Axle
	5200 2965	1			Four Wheel Drive
19					BRACKET
	5200 2968	1			With AMC or Dana Model 35 Axle
	5200 3173	1			With AMC Large Axle
20	5200 2959	1			LINE, Brake
21	5200 2960	1			LINE, Brake

MODEL CODES

16=Cherokee 2 Dr.(1981-83)
17=Cherokee 2 Dr.(1981-83)
73=Cherokee 2WD-2 Dr.(1984-86)
74=Cherokee 2WD-4 Dr.(1984-86)
18=Cherokee 4 Dr.(1981-83)
77=Cherokee 4WD-2 Dr.(1984-86)
78=Cherokee 4WD-4 Dr.(1984-86)
85=CJ-5 (1981-83)
86=CJ-6(1981)
87=CJ-7(1981-86)
88=CJ-8, Scrambler(1981-86)
64=Comanche 2WD-6 Ft. Box(1986)
66=Comanche 2WD-7 Ft. Box(1986)
63=Comanche 4WD-6 Ft. Box(1986)
65=Comanche 4WD-7 Ft. Box(1986)
15=Grand Wagoneer 4 Dr.(1984-86)
25=J-10 Truck 7 Ft. Box(1981-84)
26=J10 Truck 8 Ft. Box(1981-86)
27=J-20 Truck 8 Ft. Box(1981-86)
15=Wagoneer 4 Dr.(1981-83)
75=Wagoneer 4WD-4 Dr.(1984-86)

BODY
CJ=CJ-5, CJ-6, CJ-7, CJ-8, Scrambler(1981-86)
MJ=Comanche Pickup(1986)

STYLES
SJ=Wagoneer(1981-83), Grand Wagoneer(1984-86), Cherokee(1981-83), J-10, J-20(1981-86)
XJ=Wagoneer(1984-86), Cherokee(1984-86)

AR = Use as Required - = Non Illustrated Part P.A.R. = Paint as Required

« RETURN TO GROUP INDEX

LINES AND HOSES, BRAKE EXPORT XJ CHEROKEE, XJ WAGONEER
Figure 5-1600

81J05 1600

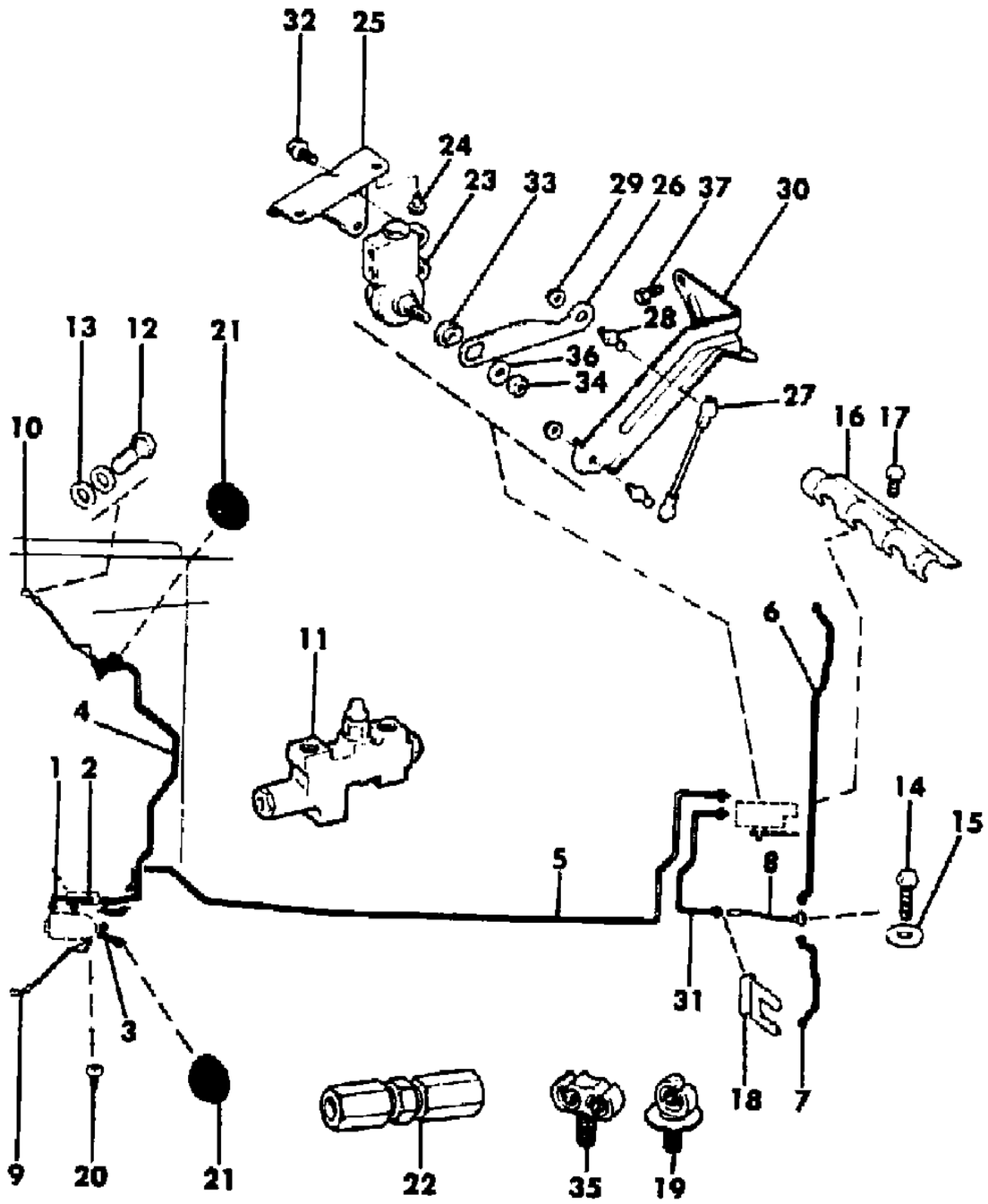

ITEM	PART NUMBER	QTY	BODY	MODEL	DESCRIPTION
1	5200 0173	1			LINE, Brake
2	5200 0172	1			LINE, Brake
3	5200 0164	1			LINE, Brake
4	5200 0165	1			LINE, Brake
5	5200 0328	1			LINE, Brake
6	5200 0168	1			LINE, Brake
7	5200 0167	1			LINE, Brake
8	5200 0162	1			LINE, Brake
9					HOSE, Brake
	5200 0161	1			1984-85
	5200 1405	1			1986
10					HOSE, Brake
	5200 0160	1			1984-85
	5200 1404	1			1986
11	5200 1774	1			VALVE, Proportioning
12	J400 6700	2			BOLT
13	J323 6434	4			GASKET
14	T300 1235	1			BOLT
15	J400 1089	2			WASHER
16	J323 4854	1			CLIP
17	3420 1152	1			BOLT
18	J004 7774	1			CLIP
19	3200 0404	1			CLIP
20	1150 2764	2			SCREW
21	J312 6237	2			GROMMET
22	J812 6773	AR			UNION, Brake Line Repair
23	5200 0329	1			VALVE, Height Sensing
24	1150 0986	2			BOLT
25	5200 0330	1			BRACKET
26	5200 0332	1			LEVER
27	5200 0739	1			LINK
28	J420 0415	2			STUD, Ball
29	1150 3739	2			NUT
30	5200 0737	1			BRACKET
31	5200 0327	1			LINE, Brake
32	J942 3545	1			BOLT
33	5200 0782	1			BUSHING
34	J012 0376	1			NUT
35	5200 2044	2			CLIP

MODEL CODES
16=Cherokee 2 Dr.(1981-83)
17=Cherokee 2 Dr.(1981-83)
73=Cherokee 2WD-2 Dr.(1984-86)
74=Cherokee 2WD-4 Dr.(1984-86)
18=Cherokee 4 Dr.(1981-83)
77=Cherokee 4WD-2 Dr.(1984-86)
78=Cherokee 4WD-4 Dr.(1984-86)
85=CJ-5 (1981-83)
86=CJ-6(1981)
87=CJ-7(1981-86)
88=CJ-8, Scrambler(1981-86)
64=Comanche 2WD-6 Ft. Box(1986)
66=Comanche 2WD-7 Ft. Box(1986)
63=Comanche 4WD-6 Ft. Box(1986)
65=Comanche 4WD-7 Ft. Box(1986)
15=Grand Wagoneer 4 Dr.(1984-86)
25=J-10 Truck 7 Ft. Box(1981-84)
26=J10 Truck 8 Ft. Box(1981-86)
27=J-20 Truck 8 Ft. Box(1981-86)
15=Wagoneer 4 Dr.(1981-83)
75=Wagoneer 4WD-4 Dr.(1984-86)

BODY
CJ=CJ-5, CJ-6, CJ-7, CJ-8, Scrambler(1981-86)
MJ=Comanche Pickup(1986)

STYLES
SJ=Wagoneer(1981-83), Grand Wagoneer(1984-86), Cherokee(1981-83), J-10, J-20(1981-86)
XJ=Wagoneer(1984-86), Cherokee(1984-86)

AR = Use as Required - = Non Illustrated Part P.A.R. = Paint as Required

« RETURN TO GROUP INDEX »

81J05 1600

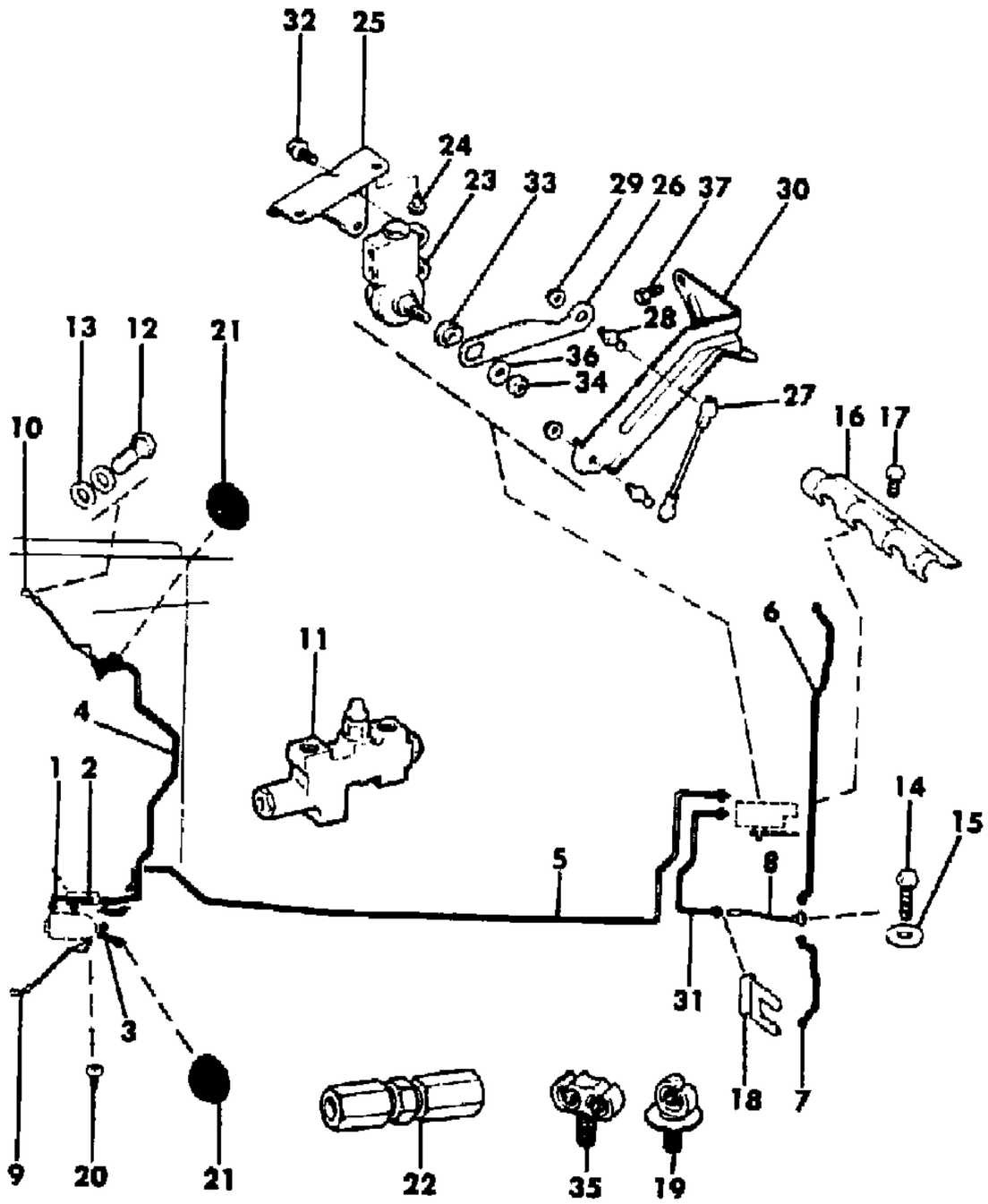

ITEM	PART NUMBER	QTY	BODY	MODEL	DESCRIPTION
36	J012 0393	1			WASHER
37	1150 2453	3			BOLT

MODEL CODES

16=Cherokee 2 Dr.(1981-83)	78=Cherokee 4WD-4 Dr.(1984-86)	64=Comanche 2WD-6 Ft. Box(1986)	25=J-10 Truck 7 Ft. Box(1981-84)
17=Cherokee 2 Dr.(1981-83)	85=CJ-5 (1981-83)	66=Comanche 2WD-7 Ft. Box(1986)	26=J10 Truck 8 Ft. Box(1981-86)
73=Cherokee 2WD-2 Dr.(1984-86)	86=CJ-6(1981)	63=Comanche 4WD-6 Ft. Box(1986)	27=J-20 Truck 8 Ft. Box(1981-86)
74=Cherokee 2WD-4 Dr.(1984-86)	87=CJ-7(1981-86)	65=Comanche 4WD-7 Ft. Box(1986)	15=Wagoneer 4 Dr.(1981-83)
18=Cherokee 4 Dr.(1981-83)	88=CJ-8, Scrambler(1981-86)	15=Grand Wagoneer 4 Dr.(1984-86)	75=Wagoneer 4WD-4 Dr.(1984-86)
77=Cherokee 4WD-2 Dr.(1984-86)			

BODY
CJ=CJ-5, CJ-6, CJ-7, CJ-8, Scrambler(1981-86)
MJ=Comanche Pickup(1986)

STYLES
SJ=Wagoneer(1981-83), Grand Wagoneer(1984-86), Cherokee(1981-83), J-10, J-20(1981-86)
XJ=Wagoneer(1984-86), Cherokee(1984-86)

AR = Use as Required - = Non Illustrated Part P.A.R. = Paint as Required

BRAKES, FRONT XJ CHEROKEE, XJ WAGONEER COMANCHE
Figure 5-1700

81J05 1700

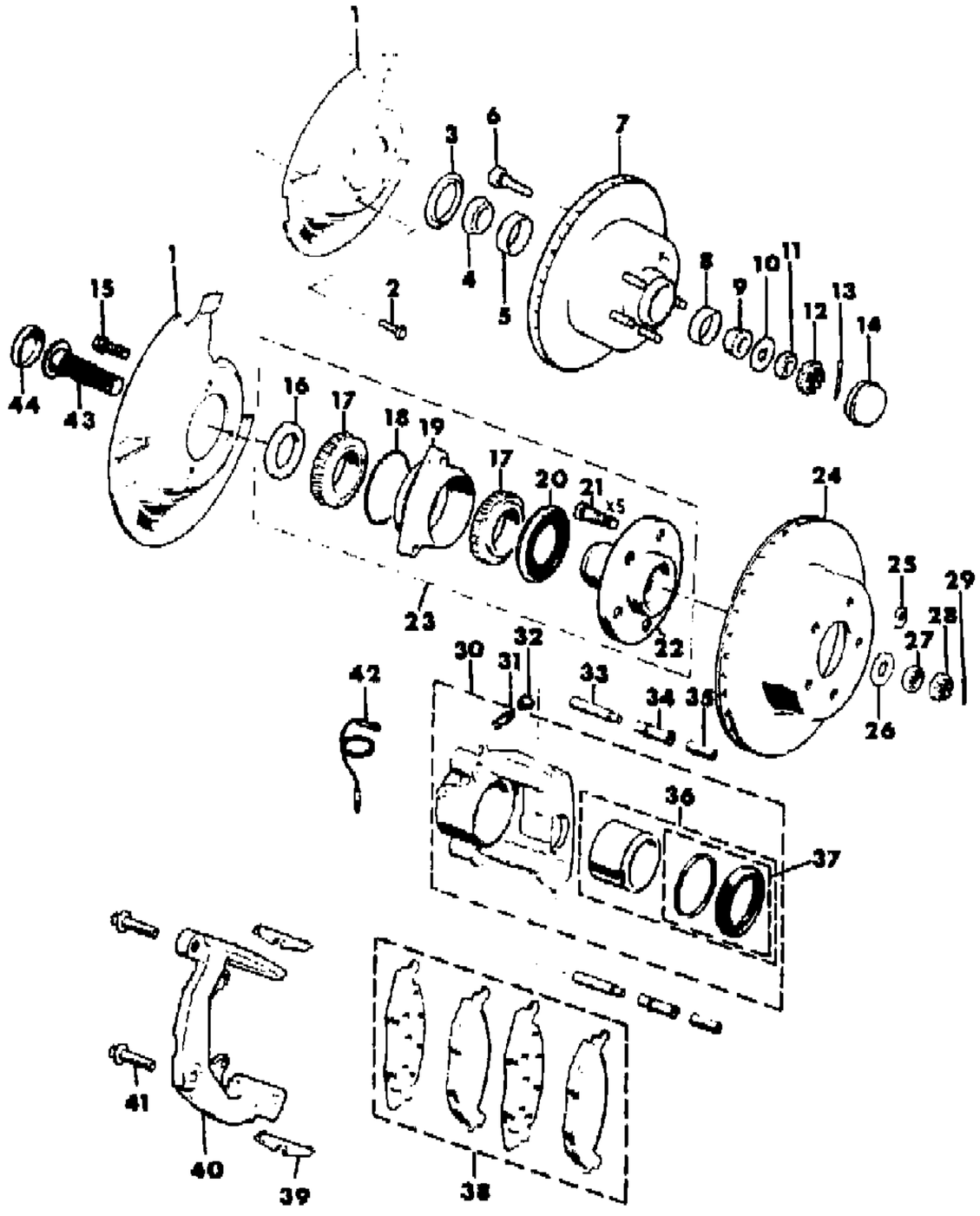

ITEM	PART NUMBER	QTY	BODY	MODEL	DESCRIPTION
1					SHIELD, Splash
	5200 0114	1			Right
	5200 0115	1			Left
2	1150 3451	6			BOLT
3	5300 2919	2			SEAL
4	5300 2922	2			CONE, Bearing
5	5300 2925	2			CUP, Bearing
6	8350 4792	10			STUD, Wheel
7	5300 2928	2			ROTOR, Brake
8	5300 2924	2			CUP, Bearing
9	5300 2921	2			CONE, Bearing
10	J400 7358	2			WASHER
11	J317 3399	2			NUT
12	J317 3401	2			RETAINER
13	J010 3387	2			PIN, Cotter
14	J322 3364	2			CAP
15	3420 1535	6			BOLT
16	5300 0239	2			SEAL
17	5300 0238	2			CONE, Bearing
18	5300 0237	2			SEAL
19	5300 0230	2			CARRIER, Hub And Bearing ***
20	J323 8137	2			SEAL
21	J323 8138	10			STUD
22	5300 0234	2			HUB
23	5300 0228	2			HUB ASSEMBLY ***
24	J325 1156	2			ROTOR, Brake
25	J400 6185	6			NUT
26	J420 0096	2			WASHER
27	J420 0095	2			NUT
28	J420 0097	2			RETAINER
29	1101 0069	2			PIN, Cotter
30					CALIPER, Brake
	J813 3846	1			Right
	J813 3847	1			Left
31	J320 3313	2			SCREW, Bleeder
32	J324 0871	2			CAP
33	8350 4655	4			PIN, Caliper
34	5200 1701	4			BUSHING
35	5200 1700	4			SLEEVE

MODEL CODES

16=Cherokee 2 Dr.(1981-83)
17=Cherokee 2 Dr.(1981-83)
73=Cherokee 2WD-2 Dr.(1984-86)
74=Cherokee 2WD-4 Dr.(1984-86)
18=Cherokee 4 Dr.(1981-83)
77=Cherokee 4WD-2 Dr.(1984-86)
78=Cherokee 4WD-4 Dr.(1984-86)
85=CJ-5 (1981-83)
86=CJ-6(1981)
87=CJ-7(1981-86)
88=CJ-8, Scrambler(1981-86)
64=Comanche 2WD-6 Ft. Box(1986)
66=Comanche 2WD-7 Ft. Box(1986)
63=Comanche 4WD-6 Ft. Box(1986)
65=Comanche 4WD-7 Ft. Box(1986)
15=Grand Wagoneer 4 Dr.(1984-86)
25=J-10 Truck 7 Ft. Box(1981-84)
26=J10 Truck 8 Ft. Box(1981-86)
27=J-20 Truck 8 Ft. Box(1981-86)
15=Wagoneer 4 Dr.(1981-83)
75=Wagoneer 4WD-4 Dr.(1984-86)

BODY
CJ=CJ-5, CJ-6, CJ-7, CJ-8, Scrambler(1981-86)
MJ=Comanche Pickup(1986)

STYLES
SJ=Wagoneer(1981-83), Grand Wagoneer(1984-86), Cherokee(1981-83), J-10, J-20(1981-86)
XJ=Wagoneer(1984-86), Cherokee(1984-86)

AR = Use as Required - = Non Illustrated Part P.A.R. = Paint as Required

« RETURN TO GROUP INDEX »

BRAKES, FRONT XJ CHEROKEE, XJ WAGONEER COMANCHE
Figure 5-1700

81J05 1700

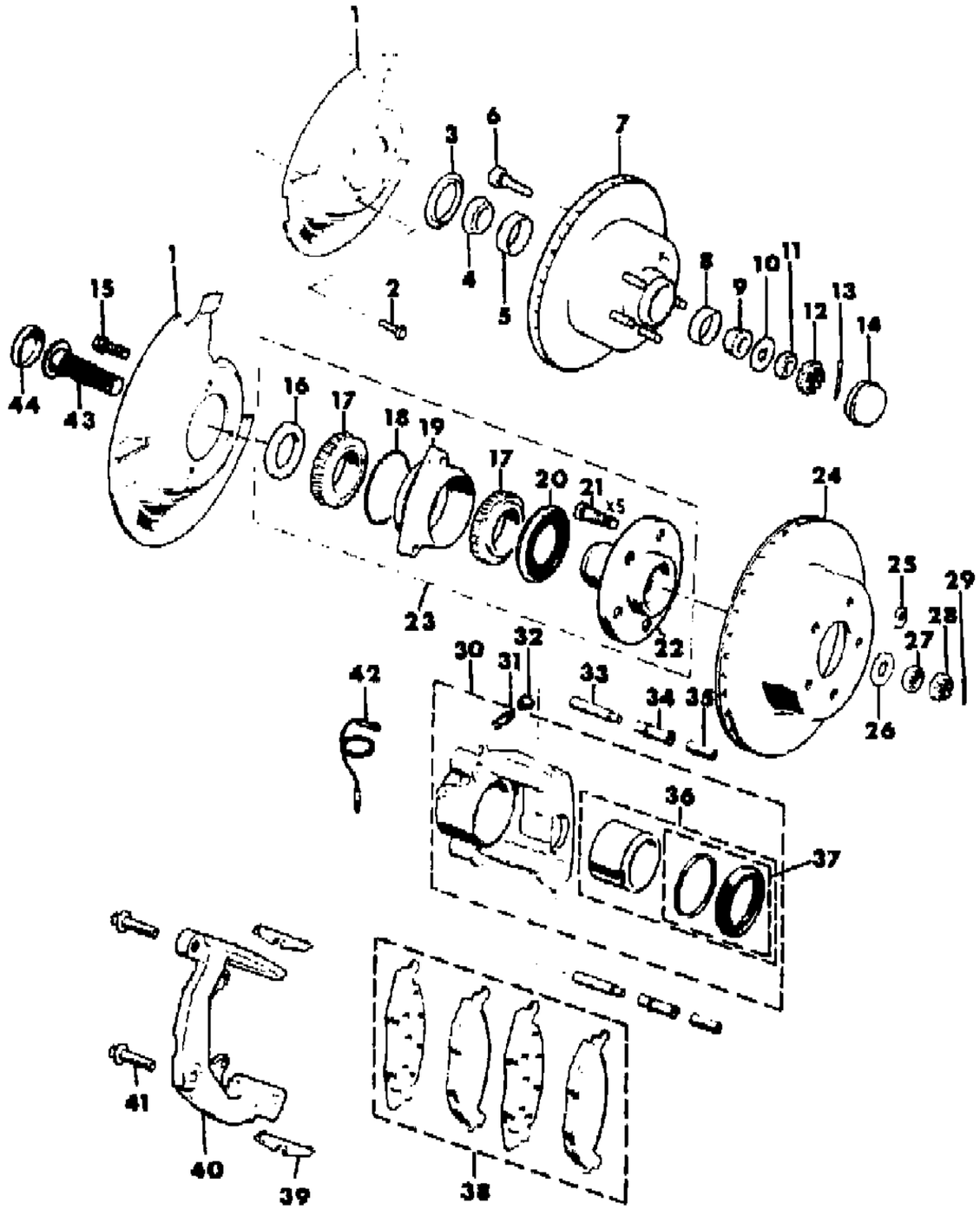

ITEM	PART NUMBER	QTY	BODY	MODEL	DESCRIPTION
36	J813 3845	2			PISTON PACKAGE ***
37	J813 3852	2			SEAL PACKAGE
38					PAD PACKAGE, Brake
	8350 1167	1			U.S., CANADA
	8350 2200	1			EXPORT
39	J323 9865	4			CLIP, Anti-Rattle
40	5200 0490	2			BRACKET, Mounting
41	3420 1506	4			BOLT
42	5600 1081	2			SENSOR, Brake Pad, System Sentry
43	8350 2138	2			SHAFT, Two Wheel Drive
44	8350 2139	2			COVER, Two Wheel Drive

MODEL CODES

16=Cherokee 2 Dr.(1981-83)
17=Cherokee 2 Dr.(1981-83)
73=Cherokee 2WD-2 Dr.(1984-86)
74=Cherokee 2WD-4 Dr.(1984-86)
18=Cherokee 4 Dr.(1981-83)
77=Cherokee 4WD-2 Dr.(1984-86)
78=Cherokee 4WD-4 Dr.(1984-86)
85=CJ-5 (1981-83)
86=CJ-6(1981)
87=CJ-7(1981-86)
88=CJ-8, Scrambler(1981-86)
64=Comanche 2WD-6 Ft. Box(1986)
66=Comanche 2WD-7 Ft. Box(1986)
63=Comanche 4WD-6 Ft. Box(1986)
65=Comanche 4WD-7 Ft. Box(1986)
15=Grand Wagoneer 4 Dr.(1984-86)
25=J-10 Truck 7 Ft. Box(1981-84)
26=J10 Truck 8 Ft. Box(1981-86)
27=J-20 Truck 8 Ft. Box(1981-86)
15=Wagoneer 4 Dr.(1981-83)
75=Wagoneer 4WD-4 Dr.(1984-86)

BODY
CJ=CJ-5, CJ-6, CJ-7, CJ-8, Scrambler(1981-86)
MJ=Comanche Pickup(1986)

STYLES
SJ=Wagoneer(1981-83), Grand Wagoneer(1984-86), Cherokee(1981-83), J-10, J-20(1981-86)
XJ=Wagoneer(1984-86), Cherokee(1984-86)

AR = Use as Required - = Non Illustrated Part P.A.R. = Paint as Required

« RETURN TO GROUP INDEX

BRAKES, REAR AMC OR DANA MODEL 35 AXLE XJ CHEROKEE, XJ WAGONEER, COMANCHE
Figure 5-1800

81J05 1800

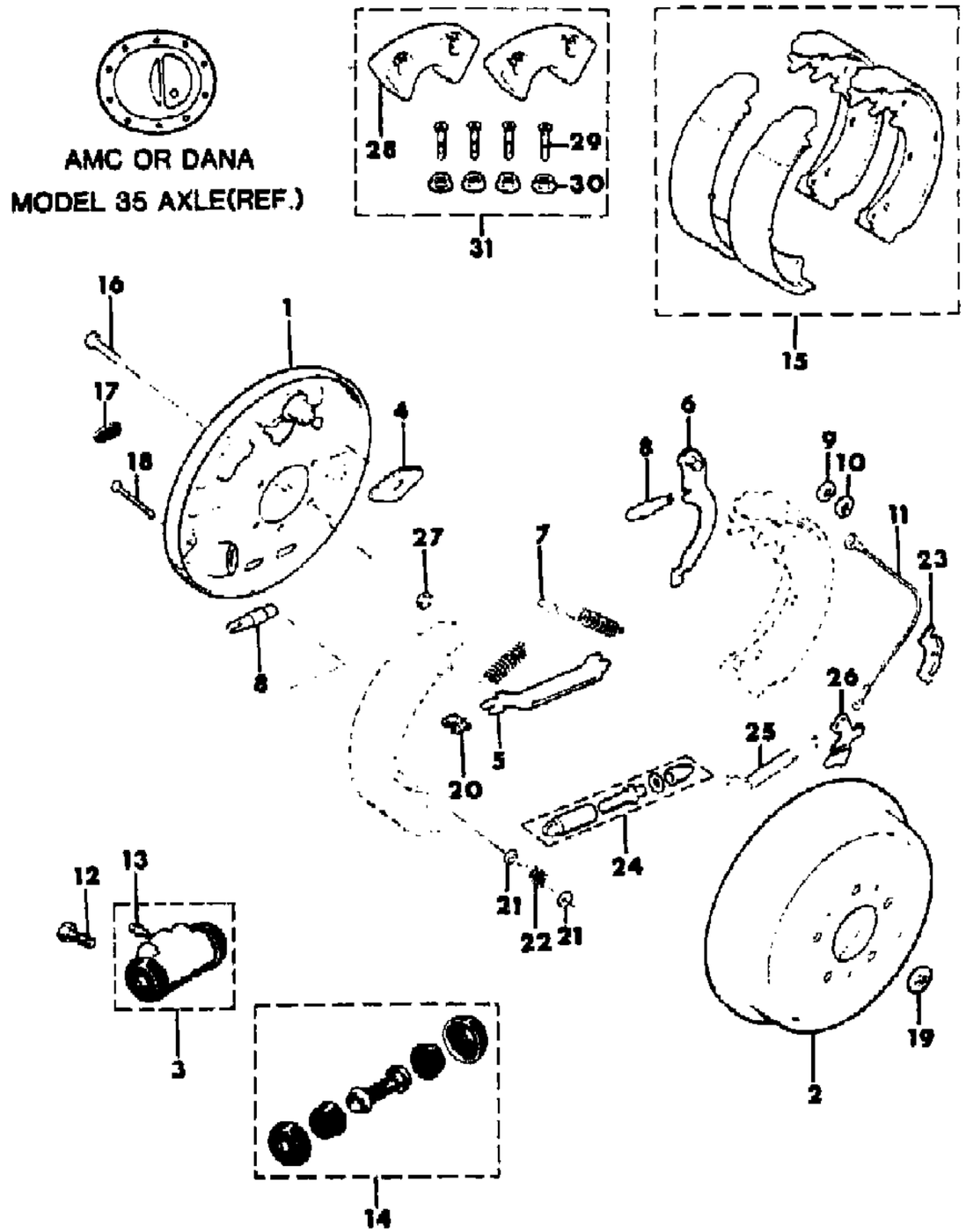

ITEM	PART NUMBER	QTY	BODY	MODEL	DESCRIPTION
1					PLATE, Backing
	8350 0988	1			Right
	8350 0989	1			Left
2	5200 1151	2			DRUM, Brake (Cast#82663-4) (D)
3					WHEEL, Cylinder ***
	5200 0848	1			Right
	5200 0849	1			Left
4	J320 1032	2			PLATE, Guide
5					STRUT, Parking Brake
	J311 2778	2		XJ	
	8350 2899	2		MJ	
6					LEVER, Cable
	J320 1034	1			Right
	J320 1033	1			Left
7	J311 2780	4			SPRING, Return
8	J004 8331	4			LINK
9					WASHER
	J310 8203	2		XJ	
	8350 2900	2		MJ	
10	J310 8202	2			RETAINER
11	J320 1027	2			CABLE
12	J448 6551	4			BOLT
13	J320 3313	2			SCREW, Bleeder
14	8350 0987	2			REPAIR PACKAGE, Wheel Cylinder
15					SHOE PACKAGE, Brake ***
	J813 3818	1			New
	4762 542	1			EUROPE
	JR77 5075	1			Remanufactured
16	J314 3794	8			BOLT
17	J320 1957	4			PLUG, Adjusting
18	J314 3612	4			PIN
19	J400 6185	2			NUT
20	J311 2779	2			SPRING
21	J008 9259	8			CUP
22	J320 5979	4			SPRING
23	J320 1947	2			GUIDE, Cable
24					ADJUSTER ASSEMBLY ***
	5200 1216	1			Right
	5200 1215	1			Left

MODEL CODES
16=Cherokee 2 Dr.(1981-83)
17=Cherokee 2 Dr.(1981-83)
73=Cherokee 2WD-2 Dr.(1984-86)
74=Cherokee 2WD-4 Dr.(1984-86)
18=Cherokee 4 Dr.(1981-83)
77=Cherokee 4WD-2 Dr.(1984-86)
78=Cherokee 4WD-4 Dr.(1984-86)
85=CJ-5 (1981-83)
86=CJ-6(1981)
87=CJ-7(1981-86)
88=CJ-8, Scrambler(1981-86)
64=Comanche 2WD-6 Ft. Box(1986)
66=Comanche 2WD-7 Ft. Box(1986)
63=Comanche 4WD-6 Ft. Box(1986)
65=Comanche 4WD-7 Ft. Box(1986)
15=Grand Wagoneer 4 Dr.(1984-86)
25=J-10 Truck 7 Ft. Box(1981-84)
26=J10 Truck 8 Ft. Box(1981-86)
27=J-20 Truck 8 Ft. Box(1981-86)
15=Wagoneer 4 Dr.(1981-83)
75=Wagoneer 4WD-4 Dr.(1984-86)

BODY
CJ=CJ-5, CJ-6, CJ-7, CJ-8, Scrambler(1981-86)
MJ=Comanche Pickup(1986)

STYLES
SJ=Wagoneer(1981-83), Grand Wagoneer(1984-86), Cherokee(1981-83), J-10, J-20(1981-86)
XJ=Wagoneer(1984-86), Cherokee(1984-86)

AR = Use as Required - = Non Illustrated Part P.A.R. = Paint as Required

« RETURN TO GROUP INDEX »

81J05 1800

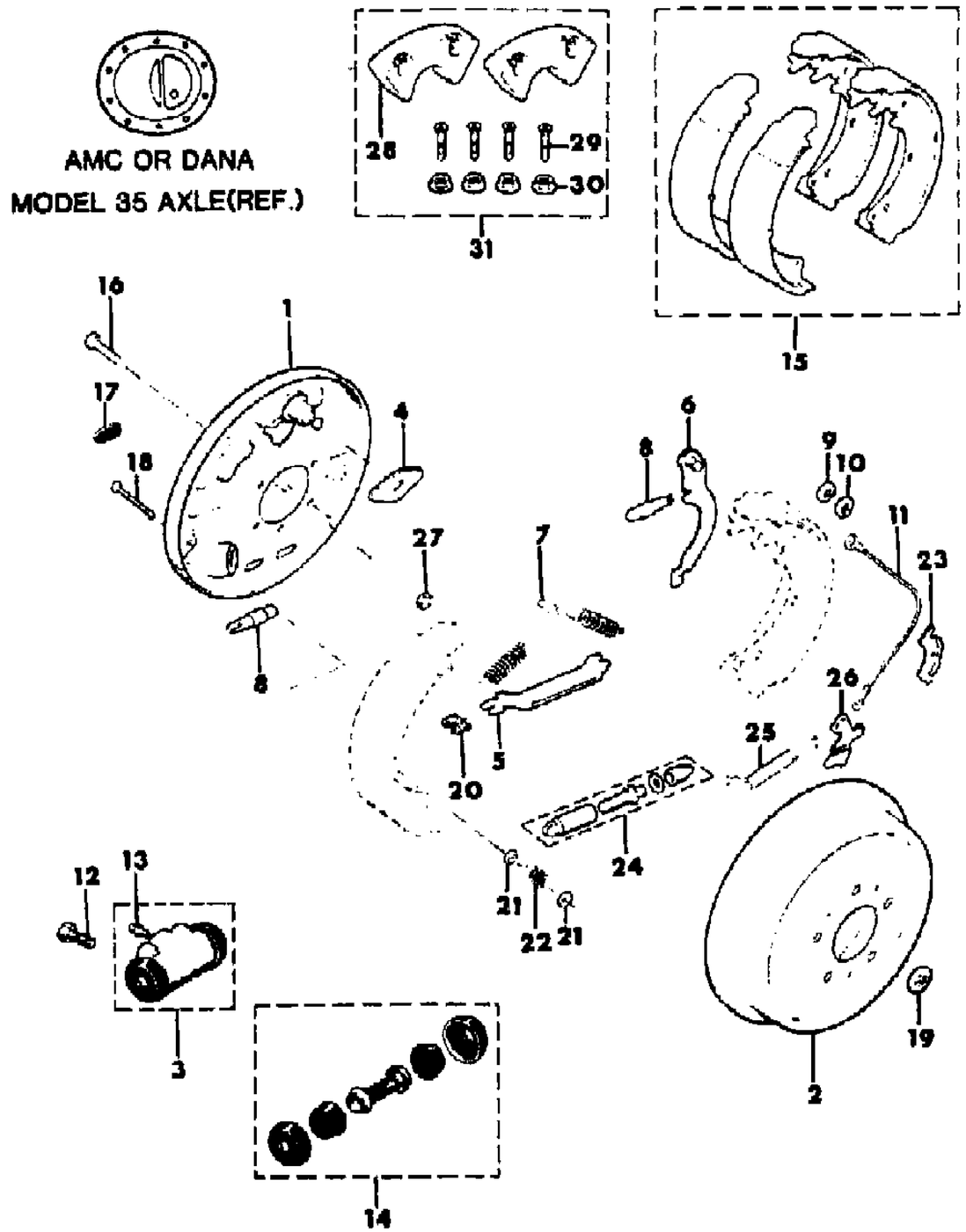

ITEM	PART NUMBER	QTY	BODY	MODEL	DESCRIPTION
25					SPRING, Adjuster
	J320 1937	2		XJ	
	J094 3136	2		MJ	
26					LEVER, Adjuster
	J320 1030	1			Right
	J320 1029	1			Left
27	J941 1783	8			NUT
28	5200 4149	2			DAMPER ***
29	3420 2124	4			BOLT
30	1150 3750	4			NUT
31	8310 0069	1			DAMPER PACKAGE ***

MODEL CODES
16=Cherokee 2 Dr.(1981-83)
17=Cherokee 2 Dr.(1981-83)
73=Cherokee 2WD-2 Dr.(1984-86)
74=Cherokee 2WD-4 Dr.(1984-86)
18=Cherokee 4 Dr.(1981-83)
77=Cherokee 4WD-2 Dr.(1984-86)
78=Cherokee 4WD-4 Dr.(1984-86)
85=CJ-5 (1981-83)
86=CJ-6(1981)
87=CJ-7(1981-86)
88=CJ-8, Scrambler(1981-86)
64=Comanche 2WD-6 Ft. Box(1986)
66=Comanche 2WD-7 Ft. Box(1986)
63=Comanche 4WD-6 Ft. Box(1986)
65=Comanche 4WD-7 Ft. Box(1986)
15=Grand Wagoneer 4 Dr.(1984-86)
25=J-10 Truck 7 Ft. Box(1981-84)
26=J10 Truck 8 Ft. Box(1981-86)
27=J-20 Truck 8 Ft. Box(1981-86)
15=Wagoneer 4 Dr.(1981-83)
75=Wagoneer 4WD-4 Dr.(1984-86)

BODY
CJ=CJ-5, CJ-6, CJ-7, CJ-8, Scrambler(1981-86)
MJ=Comanche Pickup(1986)

STYLES
SJ=Wagoneer(1981-83), Grand Wagoneer(1984-86), Cherokee(1981-83), J-10, J-20(1981-86)
XJ=Wagoneer(1984-86), Cherokee(1984-86)

AR = Use as Required - = Non Illustrated Part P.A.R. = Paint as Required

BRAKES, REAR AMC LARGE AXLE COMANCHE
Figure 5-1900

81J05 1900

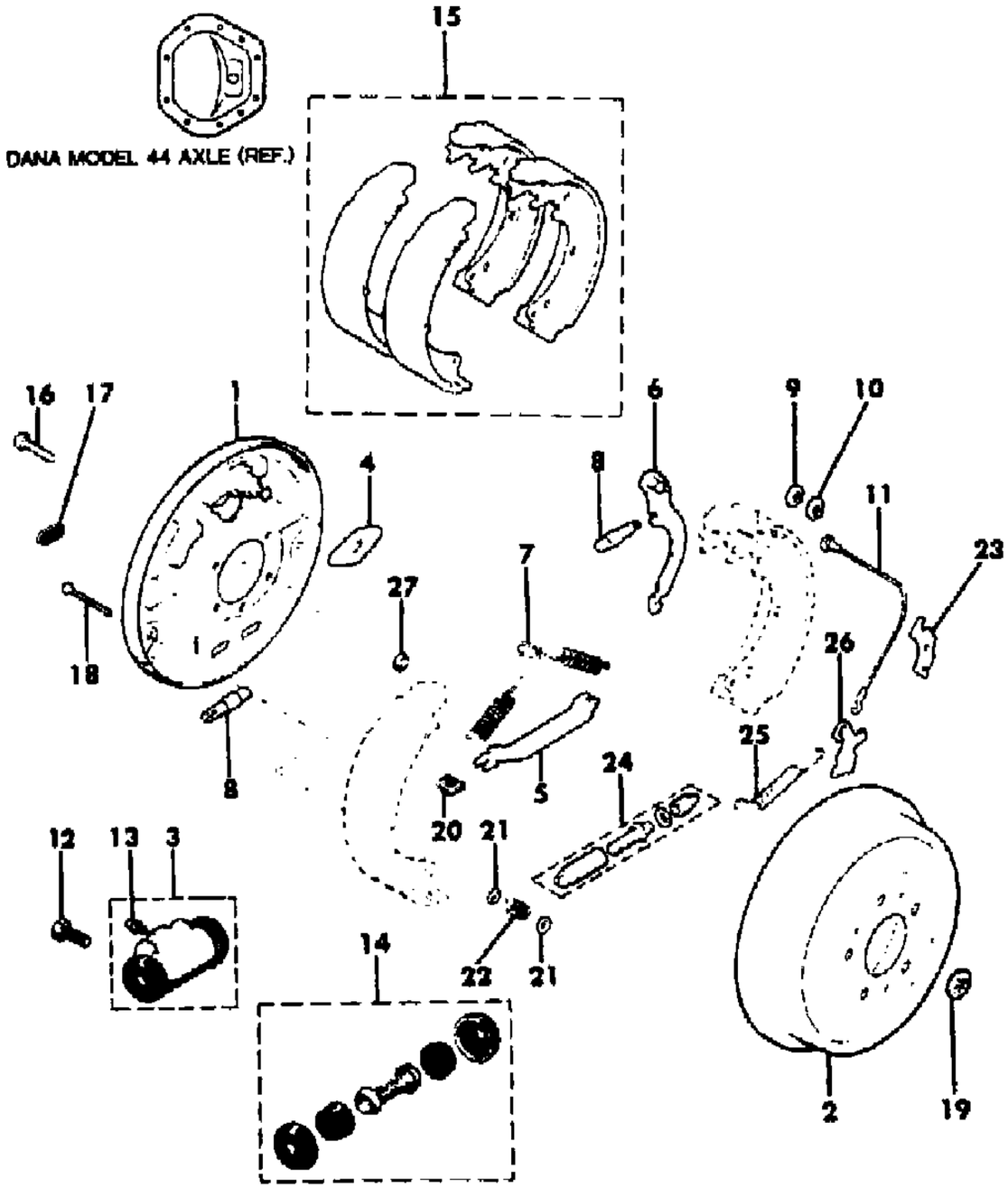

ITEM	PART NUMBER	QTY	BODY	MODEL	DESCRIPTION
1					PLATE, Backing
	8350 2386	1			Right
	8350 2387	1			Left
2	5200 1915	2			DRUM, Brake (Stamped 87087-7)
3					WHEEL CYLINDER ***
	5200 0848	1			Right
	5200 0849	1			Left
4	J320 1032	2			PLATE, Guide
5	8350 2899	2			STRUT, Parking Brake
6					LEVER, Cable
	J320 1034	1			Right
	J320 1033	1			Left
7	J311 2780	4			SPRING, Return
8	J004 8331	4			LINK
9	8350 2900	2			WASHER
10	J310 8202	2			RETAINER
11	J320 1027	2			CABLE
12	J448 6551	4			BOLT
13	J320 3313	2			SCREW, Bleeder
14	8350 0987	2			REPAIR PACKAGE, Wheel Cylinder
15	8350 2385	1			SHOE PACKAGE ***
	4762 546	1			EUROPE
16	J400 7305	8			BOLT
17	J320 1957	4			PLUG, Adjusting
18	J321 0994	4			PIN
19	J400 6185	2			NUT
20	J311 2779	2			SPRING
21	J008 9259	8			CUP
22	J320 1956	4			SPRING
23	J320 1947	2			GUIDE, Cable
24					ADJUSTER ASSEMBLY ***
	5200 1216	1			Right
	5200 1215	1			Left
25	J094 3136	2			SPRING
26					LEVER, Adjuster
	J320 1030	1			Right
	J320 1029	1			Left
27	J941 1783	8			NUT

MODEL CODES

16=Cherokee 2 Dr.(1981-83)
17=Cherokee 2 Dr.(1981-83)
73=Cherokee 2WD-2 Dr.(1984-86)
74=Cherokee 2WD-4 Dr.(1984-86)
18=Cherokee 4 Dr.(1981-83)
77=Cherokee 4WD-2 Dr.(1984-86)
78=Cherokee 4WD-4 Dr.(1984-86)
85=CJ-5 (1981-83)
86=CJ-6(1981)
87=CJ-7(1981-86)
88=CJ-8, Scrambler(1981-86)
64=Comanche 2WD-6 Ft. Box(1986)
66=Comanche 2WD-7 Ft. Box(1986)
63=Comanche 4WD-6 Ft. Box(1986)
65=Comanche 4WD-7 Ft. Box(1986)
15=Grand Wagoneer 4 Dr.(1984-86)
25=J-10 Truck 7 Ft. Box(1981-84)
26=J10 Truck 8 Ft. Box(1981-86)
27=J-20 Truck 8 Ft. Box(1981-86)
15=Wagoneer 4 Dr.(1981-83)
75=Wagoneer 4WD-4 Dr.(1984-86)

BODY
CJ=CJ-5, CJ-6, CJ-7, CJ-8, Scrambler(1981-86)
MJ=Comanche Pickup(1986)

STYLES
SJ=Wagoneer(1981-83), Grand Wagoneer(1984-86), Cherokee(1981-83), J-10, J-20(1981-86)
XJ=Wagoneer(1984-86), Cherokee(1984-86)

AR = Use as Required - = Non Illustrated Part P.A.R. = Paint as Required

« RETURN TO GROUP INDEX

PEDAL, BRAKE SJ CHEROKEE, SJ WAGONEER J10, J20
Figure 5-2000

81J05 2000

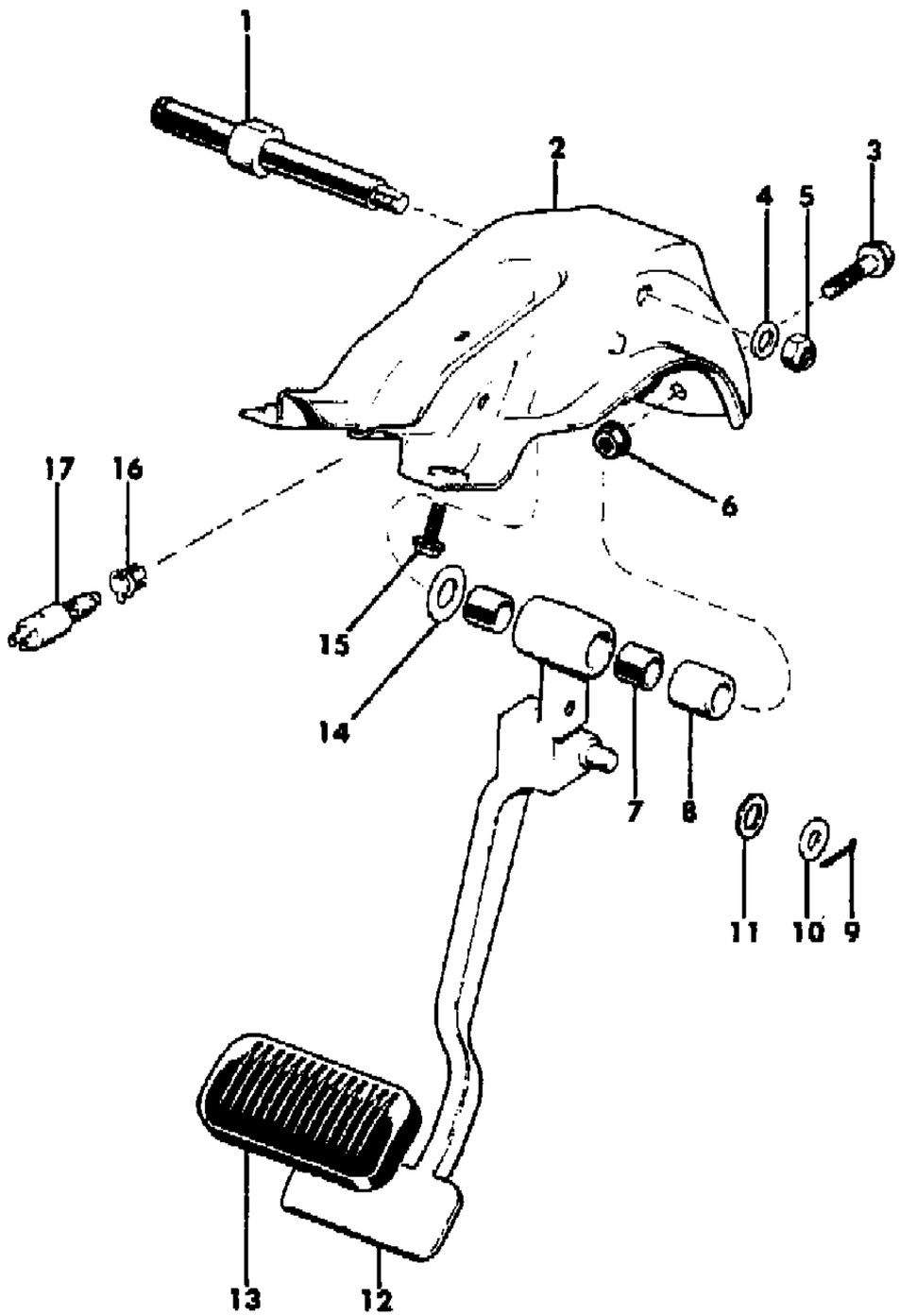

ITEM	PART NUMBER	QTY	BODY	MODEL	DESCRIPTION
1					SHAFT, Pedal
	J535 1803	1			Automatic Transmission
	J535 1805	1			Manual Transmission
2					BRACKET, Pedal
					1981
	J575 8505	1			Manual Transmission
	J575 8113	1			Six Cylinder, Automatic Transmission
	J575 8504	1			Eight Cylinder, Automatic Transmission
	J536 2884	1			Economic Commission of Europe, Manual Transmission
	J536 2885	1			Economic Commission of Europe, Automatic Transmission
					1982-86
	J536 3847	1			
	J805 0507	1			EXPORT, Manual Transmission, Right Hand Drive
	J805 0508	1			EXPORT, Automatic Transmission, Right Hand Drive
3	J018 0125	2			BOLT
4	J012 0396	1			WASHER
5	J400 4311	1			NUT
6	J400 3909	2			NUT
7	J094 6177	2			BEARING
8	J535 1057	1			SPACER
9	J012 1224	1			PIN, Cotter
10	J012 0395	1			WASHER, Flat
11	J095 8629	1			WASHER, Spring
12					PEDAL, Brake
					Automatic Transmission
	J535 7471	1			
	J805 0476	1			EXPORT
					Manual Transmission
	J535 7470	1			
	J805 0405	1			EXPORT
13					PAD, Pedal
					1981
	J535 7428	1			Automatic Transmission
	J094 8758	1			Manual Transmission
					1982-86
	J536 3521	1			Automatic Transmission
	J536 3508	1			Manual Transmission
14	J536 1844	1			WASHER
15	J018 0120	2			BOLT

MODEL CODES
16=Cherokee 2 Dr.(1981-83)
17=Cherokee 2 Dr.(1981-83)
73=Cherokee 2WD-2 Dr.(1984-86)
74=Cherokee 2WD-4 Dr.(1984-86)
18=Cherokee 4 Dr.(1981-83)
77=Cherokee 4WD-2 Dr.(1984-86)
78=Cherokee 4WD-4 Dr.(1984-86)
85=CJ-5 (1981-83)
86=CJ-6(1981)
87=CJ-7(1981-86)
88=CJ-8, Scrambler(1981-86)
64=Comanche 2WD-6 Ft. Box(1986)
66=Comanche 2WD-7 Ft. Box(1986)
63=Comanche 4WD-6 Ft. Box(1986)
65=Comanche 4WD-7 Ft. Box(1986)
15=Grand Wagoneer 4 Dr.(1984-86)
25=J-10 Truck 7 Ft. Box(1981-84)
26=J10 Truck 8 Ft. Box(1981-86)
27=J-20 Truck 8 Ft. Box(1981-86)
15=Wagoneer 4 Dr.(1981-83)
75=Wagoneer 4WD-4 Dr.(1984-86)

BODY
CJ=CJ-5, CJ-6, CJ-7, CJ-8, Scrambler(1981-86)
MJ=Comanche Pickup(1986)

STYLES
SJ=Wagoneer(1981-83), Grand Wagoneer(1984-86), Cherokee(1981-83), J-10, J-20(1981-86)
XJ=Wagoneer(1984-86), Cherokee(1984-86)

AR = Use as Required - = Non Illustrated Part P.A.R. = Paint as Required

PEDAL, BRAKE SJ CHEROKEE, SJ WAGONEER J10, J20
Figure 5-2000

81J05 2000

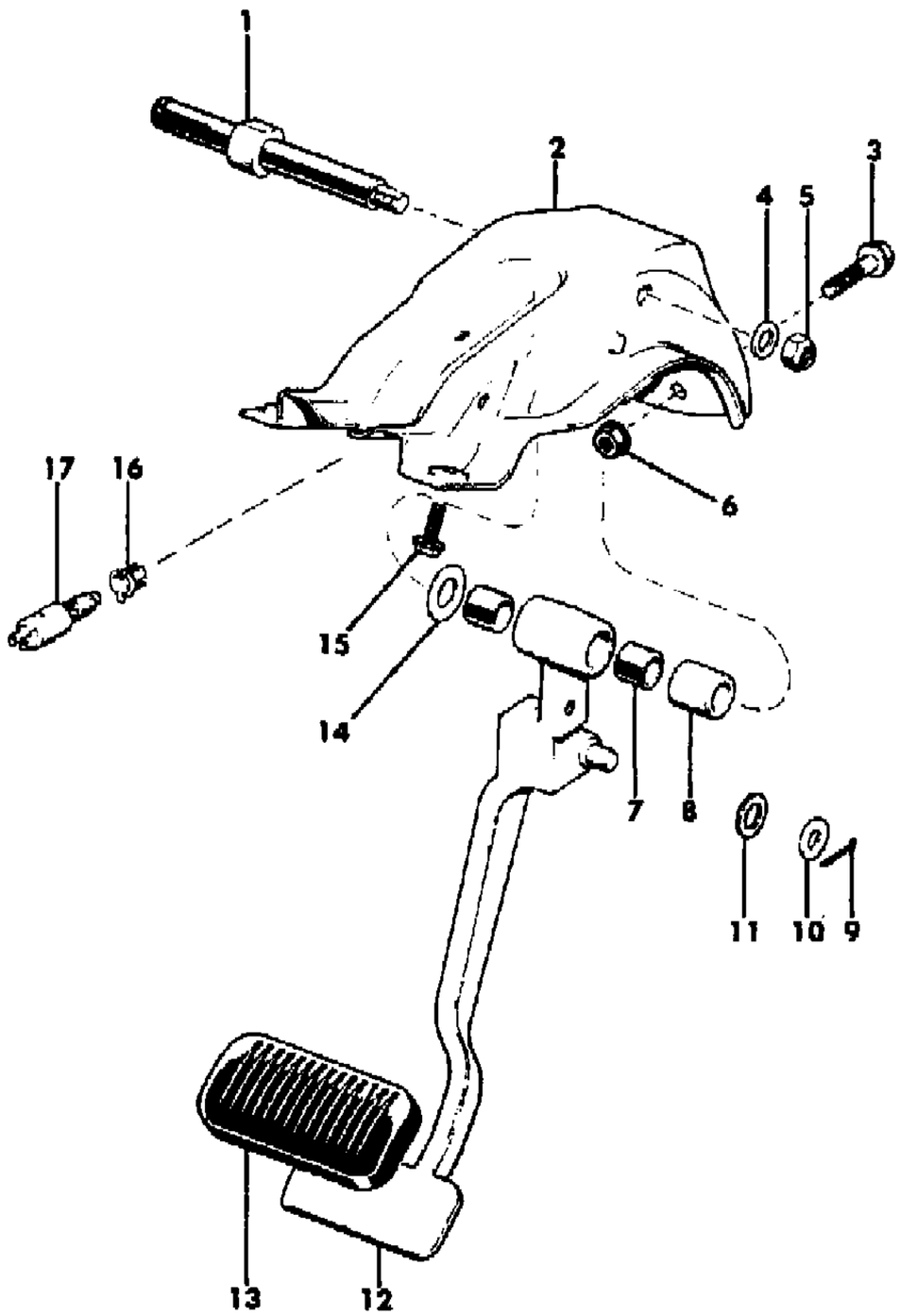

ITEM	PART NUMBER	QTY	BODY	MODEL	DESCRIPTION
16	J535 2622	1			RETAINER
17	J535 2620	1			SWITCH, Brake Lamp

MODEL CODES

16=Cherokee 2 Dr.(1981-83)
17=Cherokee 2 Dr.(1981-83)
73=Cherokee 2WD-2 Dr.(1984-86)
74=Cherokee 2WD-4 Dr.(1984-86)
18=Cherokee 4 Dr.(1981-83)
77=Cherokee 4WD-2 Dr.(1984-86)
78=Cherokee 4WD-4 Dr.(1984-86)
85=CJ-5 (1981-83)
86=CJ-6(1981)
87=CJ-7(1981-86)
88=CJ-8, Scrambler(1981-86)
64=Comanche 2WD-6 Ft. Box(1986)
66=Comanche 2WD-7 Ft. Box(1986)
63=Comanche 4WD-6 Ft. Box(1986)
65=Comanche 4WD-7 Ft. Box(1986)
15=Grand Wagoneer 4 Dr.(1984-86)
25=J-10 Truck 7 Ft. Box(1981-84)
26=J10 Truck 8 Ft. Box(1981-86)
27=J-20 Truck 8 Ft. Box(1981-86)
15=Wagoneer 4 Dr.(1981-83)
75=Wagoneer 4WD-4 Dr.(1984-86)

BODY
CJ=CJ-5, CJ-6, CJ-7, CJ-8, Scrambler(1981-86)
MJ=Comanche Pickup(1986)

STYLES
SJ=Wagoneer(1981-83), Grand Wagoneer(1984-86), Cherokee(1981-83), J-10, J-20(1981-86)
XJ=Wagoneer(1984-86), Cherokee(1984-86)

AR = Use as Required - = Non Illustrated Part P.A.R. = Paint as Required

« RETURN TO GROUP INDEX

BOOSTER AND MASTER CYLINDER SJ CHEROKEE, SJ WAGONEER J10, J20
Figure 5-2100

81J05 2100

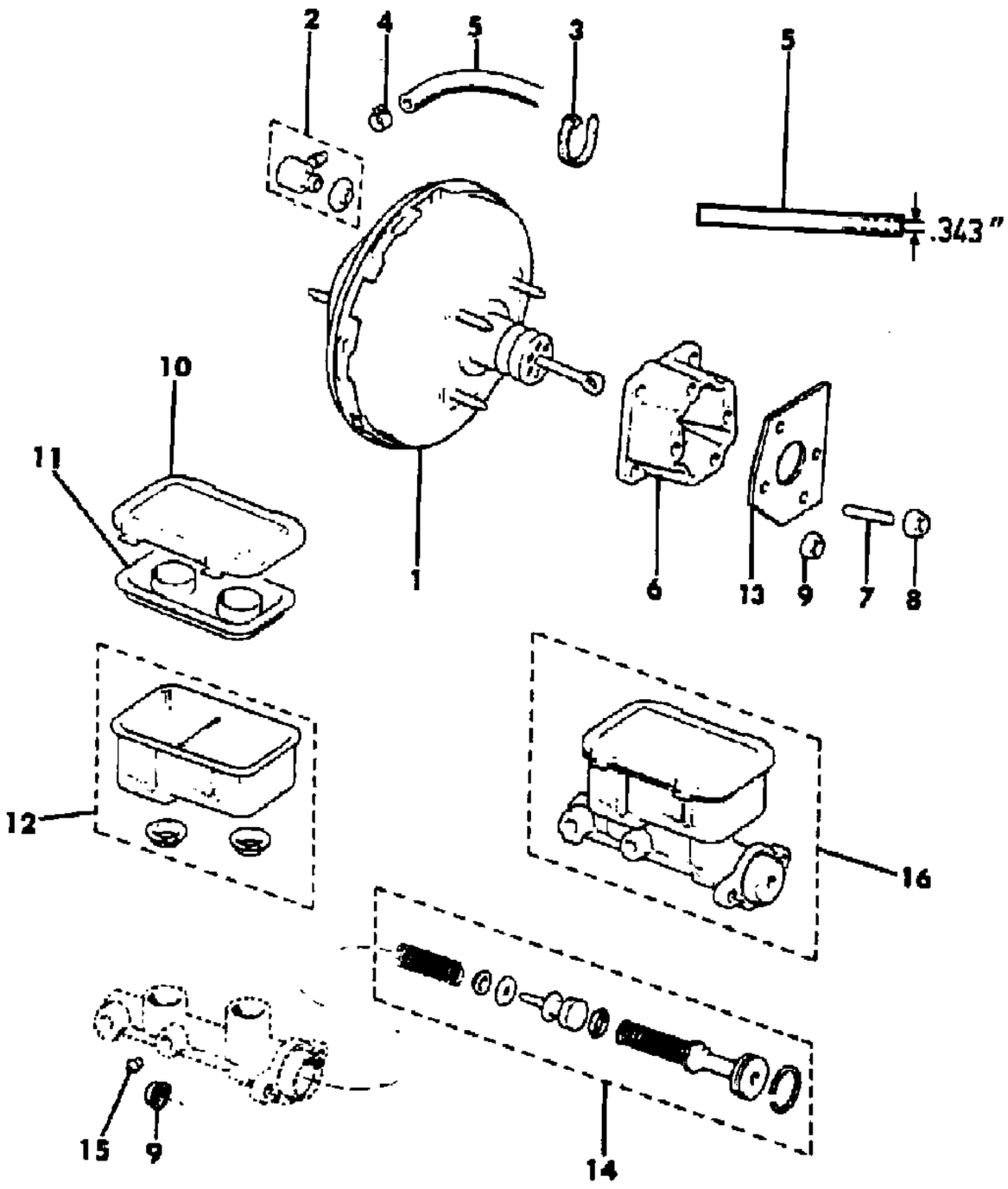

ITEM	PART NUMBER	QTY	BODY	MODEL	DESCRIPTION
1					BOOSTER, Brake
	J813 3309	1		15,16,1	Unit is 3.93" Thick
	8350 0986	1		15,16,1	Unit is 5.70" Thick
	J813 3309	1		25,26	Unit is 3.93" Thick
	8350 0986	1		25,26	Unit is 5.70" Thick
	J813 3310	1		27	1981-83: Up to Vehicle No. 066476
	8350 0986	1		27	1983-86: After Vehicle No. 066476
	J813 3310	1			1981-83: EXPORT
	8350 0986	1			1984-86: EXPORT
2	J812 5991	1			VALVE, Check
3	J322 3227	1			STRAP
4	J320 3076	1			CLAMP
5	J812 5883	1			HOSE, Vacuum
6					SPACER, Brake Booster
	J536 3039	1			Six Cylinder, 1.93" Thick
	J536 3040	1			Six Cylinder, .093" Thick
	J535 9059	1			Eight Cylinder
	J535 9059	1			Six Cylinder, Right Hand Drive
7	J400 6485	4			STUD
8	J400 6653	4			NUT
9	J420 0301	6			NUT
10	J813 3319	1			COVER
11	J813 3318	1			GASKET
12	J813 3321	1			RESERVOIR
13	J536 3040	1			SPACER
14	J813 3317	1			REPAIR PACKAGE, Master Cylinder
15	J812 8300	2			SEAT
16	J813 3316	1			CYLINDER, Brake Master

MODEL CODES

16=Cherokee 2 Dr.(1981-83)
17=Cherokee 2 Dr.(1981-83)
73=Cherokee 2WD-2 Dr.(1984-86)
74=Cherokee 2WD-4 Dr.(1984-86)
18=Cherokee 4 Dr.(1981-83)
77=Cherokee 4WD-2 Dr.(1984-86)
78=Cherokee 4WD-4 Dr.(1984-86)
85=CJ-5 (1981-83)
86=CJ-6(1981)
87=CJ-7(1981-86)
88=CJ-8, Scrambler(1981-86)
64=Comanche 2WD-6 Ft. Box(1986)
66=Comanche 2WD-7 Ft. Box(1986)
63=Comanche 4WD-6 Ft. Box(1986)
65=Comanche 4WD-7 Ft. Box(1986)
15=Grand Wagoneer 4 Dr.(1984-86)
25=J-10 Truck 7 Ft. Box(1981-84)
26=J10 Truck 8 Ft. Box(1981-86)
27=J-20 Truck 8 Ft. Box(1981-86)
15=Wagoneer 4 Dr.(1981-83)
75=Wagoneer 4WD-4 Dr.(1984-86)

BODY
CJ=CJ-5, CJ-6, CJ-7, CJ-8, Scrambler(1981-86)
MJ=Comanche Pickup(1986)

STYLES
SJ=Wagoneer(1981-83), Grand Wagoneer(1984-86), Cherokee(1981-83), J-10, J-20(1981-86)
XJ=Wagoneer(1984-86), Cherokee(1984-86)

AR = Use as Required - = Non Illustrated Part P.A.R. = Paint as Required

« RETURN TO GROUP INDEX

LINES AND HOSES, BRAKE SJ CHEROKEE, SJ WAGONEER J10, J20
Figure 5-2200

81J05 2200

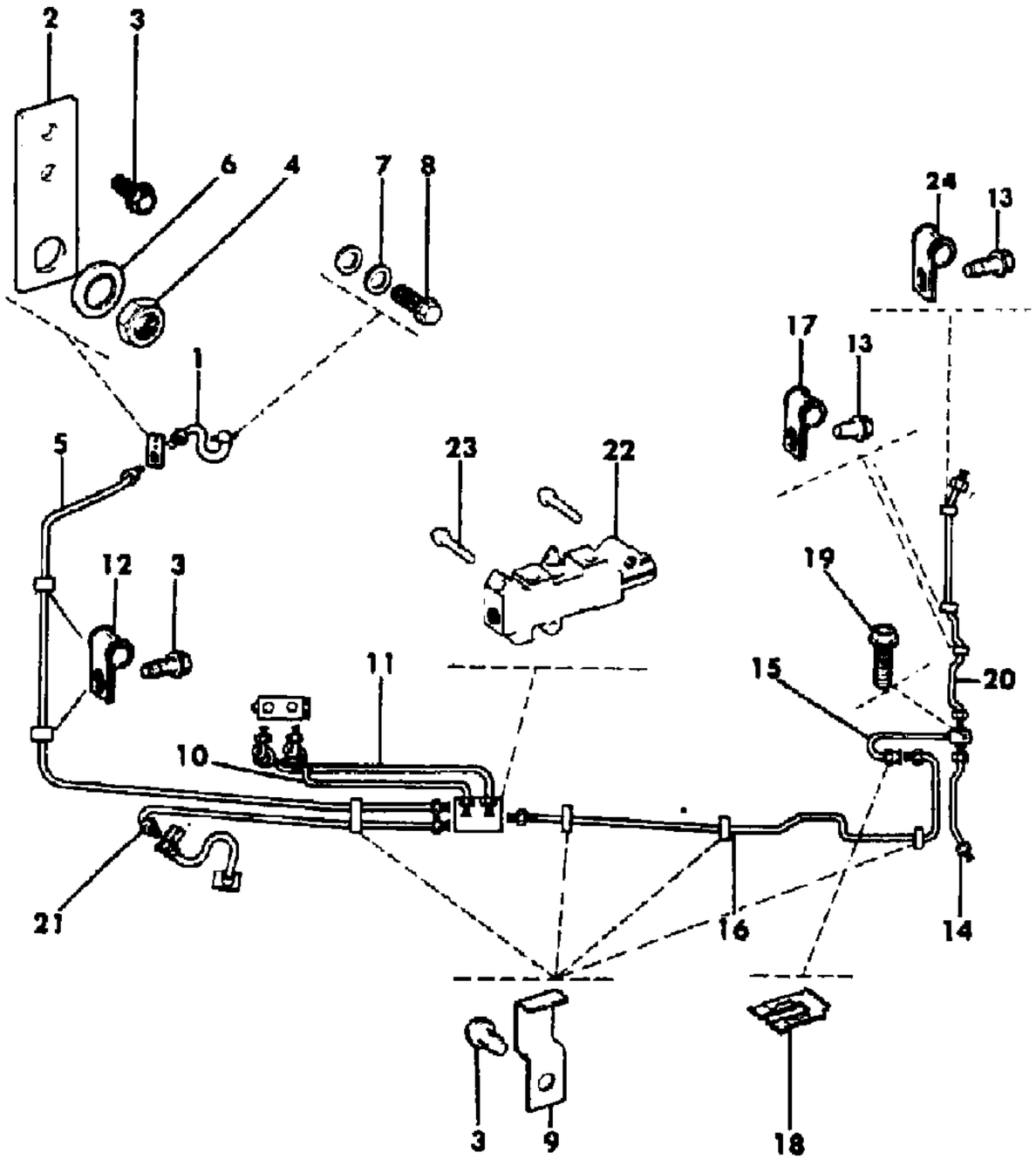

ITEM	PART NUMBER	QTY	BODY	MODEL	DESCRIPTION
1					HOSE, Brake
	J535 9322	2		15,16,1	
	J535 9323	2		17,25,2	
2	J535 3415	2			BRACKET
3	J400 5063	8			SCREW
4	J400 5338	2			NUT
5	J535 5441	1			LINE, Brake
6	J013 1016	2			WASHER
7	J420 0303	4			WASHER
8	J420 0304	2			BOLT
9	J400 4901	4			CLIP
10					LINE, Brake
	J536 2872	1		15,16,1	1981-85
	J536 2873	1		15	1986
	J536 2873	1		25,26,2	1981-86
	J805 1182	1			EXPORT, Right Hand Drive
11					LINE, Brake
	J536 2874	1		15,16,1	1981-85
	J536 2875	1		15	1986
	J536 2875	1		25,26,2	1981-86
	J805 1183	1			EXPORT, Right Hand Drive
12	J042 7026	2			CLIP
13	J400 4077	2			SCREW
14					LINE, Brake
	J536 0183	1		15,16,1	1981-84
	J536 0184	1		17	1981-83
	5200 2090	1		15	1985-86
	J536 0933	1		25,26	
	J536 0934	1		27	
	J536 0183	1			EXPORT
15					HOSE, Brake
	J535 5076	1		15,16,1	
	J535 5076	1		25	
	J535 5073	1		26,27	
16					LINE, Brake
	J536 0936	1		15,16,1	
	J536 2876	1		25	
	J536 2871	1		26,27	
17					CLIP

MODEL CODES

16=Cherokee 2 Dr.(1981-83)
17=Cherokee 2 Dr.(1981-83)
73=Cherokee 2WD-2 Dr.(1984-86)
74=Cherokee 2WD-4 Dr.(1984-86)
18=Cherokee 4 Dr.(1981-83)
77=Cherokee 4WD-2 Dr.(1984-86)
78=Cherokee 4WD-4 Dr.(1984-86)
85=CJ-5 (1981-83)
86=CJ-6(1981)
87=CJ-7(1981-86)
88=CJ-8, Scrambler(1981-86)
64=Comanche 2WD-6 Ft. Box(1986)
66=Comanche 2WD-7 Ft. Box(1986)
63=Comanche 4WD-6 Ft. Box(1986)
65=Comanche 4WD-7 Ft. Box(1986)
15=Grand Wagoneer 4 Dr.(1984-86)
25=J-10 Truck 7 Ft. Box(1981-84)
26=J10 Truck 8 Ft. Box(1981-86)
27=J-20 Truck 8 Ft. Box(1981-86)
15=Wagoneer 4 Dr.(1981-83)
75=Wagoneer 4WD-4 Dr.(1984-86)

BODY
CJ=CJ-5, CJ-6, CJ-7, CJ-8, Scrambler(1981-86)
MJ=Comanche Pickup(1986)

STYLES
SJ=Wagoneer(1981-83), Grand Wagoneer(1984-86), Cherokee(1981-83), J-10, J-20(1981-86)
XJ=Wagoneer(1984-86), Cherokee(1984-86)

AR = Use as Required - = Non Illustrated Part P.A.R. = Paint as Required

LINES AND HOSES, BRAKE SJ CHEROKEE, SJ WAGONEER J10, J20
Figure 5-2200

81J05 2200

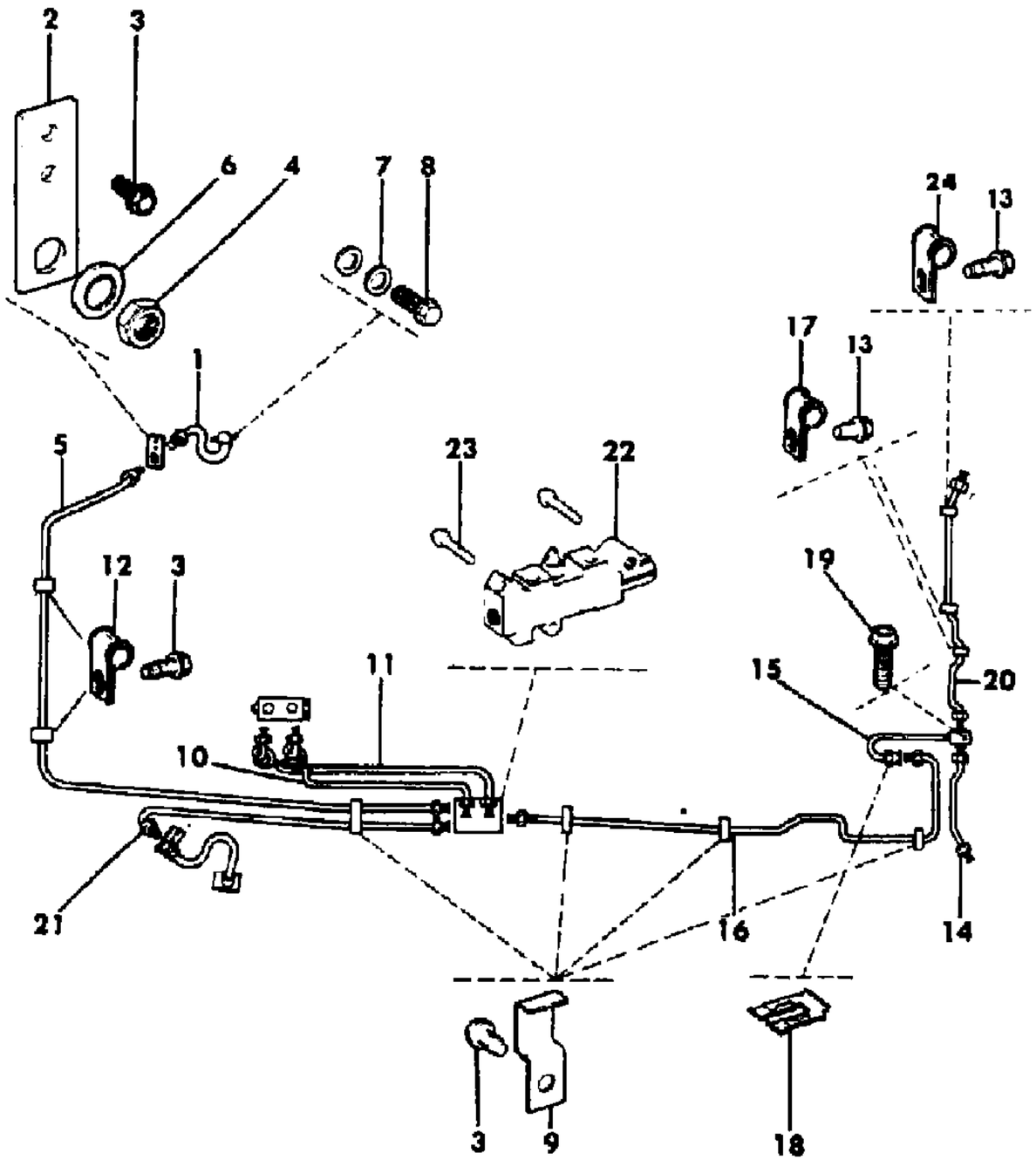

ITEM	PART NUMBER	QTY	BODY	MODEL	DESCRIPTION
	J019 2107	3		15,16,1	
	J019 2107	3		25,26	
	J017 9148	3		27	
18	J063 7427	1			CLIP
19	J400 5691	1			SCREW
20					LINE, Brake
	J536 0153	1		15,16,1	1981-86: AMC Large Axle
	J536 0175	1		17	1981-83
	5200 2996	1		15,26	1986: Dana Model 44 Axle
	J536 0141	1		25,26	1981-86: AMC Large Axle
	J536 0935	1		27	
21	J535 2184	1			LINE, Brake
22	J536 4240	1			VALVE, Proportioning
23	J400 5666	2			SCREW
24	J012 0522	1			CLIP

MODEL CODES

16=Cherokee 2 Dr.(1981-83)	78=Cherokee 4WD-4 Dr.(1984-86)	64=Comanche 2WD-6 Ft. Box(1986)	25=J-10 Truck 7 Ft. Box(1981-84)
17=Cherokee 2 Dr.(1981-83)	85=CJ-5 (1981-83)	66=Comanche 2WD-7 Ft. Box(1986)	26=J10 Truck 8 Ft. Box(1981-86)
73=Cherokee 2WD-2 Dr.(1984-86)	86=CJ-6(1981)	63=Comanche 4WD-6 Ft. Box(1986)	27=J-20 Truck 8 Ft. Box(1981-86)
74=Cherokee 2WD-4 Dr.(1984-86)	87=CJ-7(1981-86)	65=Comanche 4WD-7 Ft. Box(1986)	15=Wagoneer 4 Dr.(1981-83)
18=Cherokee 4 Dr.(1981-83)	88=CJ-8, Scrambler(1981-86)	15=Grand Wagoneer 4 Dr.(1984-86)	75=Wagoneer 4WD-4 Dr.(1984-86)
77=Cherokee 4WD-2 Dr.(1984-86)			

BODY
CJ=CJ-5, CJ-6, CJ-7, CJ-8, Scrambler(1981-86)
MJ=Comanche Pickup(1986)

STYLES
SJ=Wagoneer(1981-83), Grand Wagoneer(1984-86), Cherokee(1981-83), J-10, J-20(1981-86)
XJ=Wagoneer(1984-86), Cherokee(1984-86)

AR = Use as Required - = Non Illustrated Part P.A.R. = Paint as Required

BRAKES, FRONT SJ CHEROKEE, SJ WAGONEER J10, J20
Figure 5-2300

81J05 2300

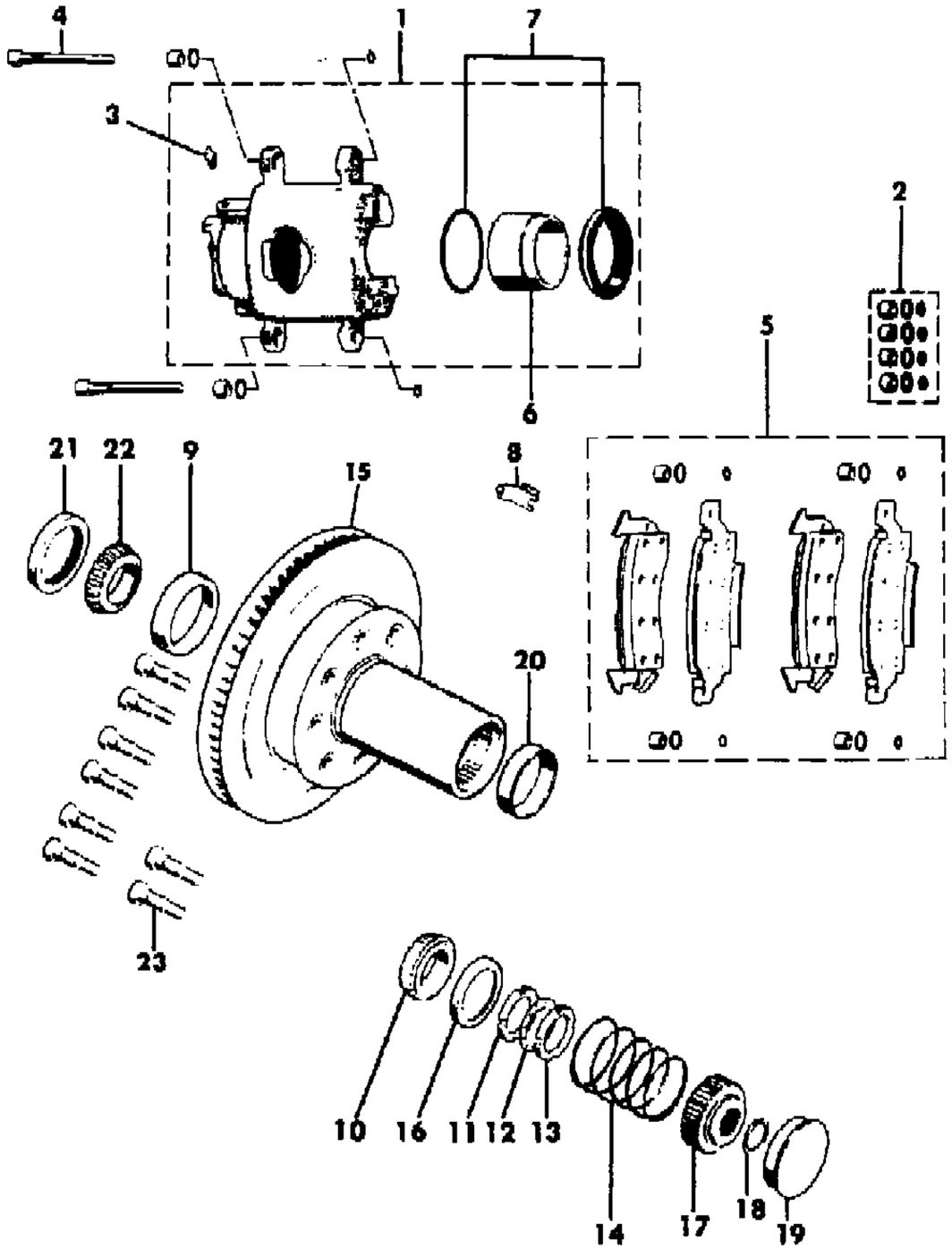

ITEM	PART NUMBER	QTY	BODY	MODEL	DESCRIPTION
1					CALIPER, Brake
					Right
	J813 3312	1			1981-85: Caliper Casting No. 18007149
	8350 1980	1			1985-86: Caliper Casting No. 18007118
					Left
	J813 3311	1			1981-85: Caliper Casting No. 18007149
	8350 1981	1			1985-86: Caliper Casting No. 18007117
2	8350 1360	1			BUSHING PACKAGE
3	J812 9722	2			SCREW, Bleeder
4	J812 4572	4			BOLT
5					PAD PACKAGE, Brake
	8350 4371	1			
	J813 3798	1			EXPORT
6	J812 4571	2			PISTON
7	J812 4574	2			SEAL PACKAGE
8	J812 4573	2			CLIP
9	J535 7394	2			CUP, Bearing
10	J315 6052	2			CONE, Bearing
11	J400 4816	2			NUT, Inner
12	J400 4815	2			WASHER
13	J535 2169	2			NUT, Outer
14	J535 2615	2			SPRING
15					ROTOR, Brake
	J535 7391	2		15,16,1	
	J535 7391	2		25,26	
	J535 9275	2		27	
16	J535 2650	2			CUP, Spring
17	J535 8494	2			GEAR
18	J535 2166	2			RING, Snap
19	J535 2268	2			CAP
20	J092 5447	2			CUP, Bearing
21	J535 9703	2			SEAL
22	J535 7401	2			BEARING
23					STUD, Wheel
	J812 4803	16		15,16,1	
	J812 4803	16		25,26	
	J535 9276	16		27	

MODEL CODES

16=Cherokee 2 Dr.(1981-83)	78=Cherokee 4WD-4 Dr.(1984-86)	64=Comanche 2WD-6 Ft. Box(1986)	25=J-10 Truck 7 Ft. Box(1981-84)
17=Cherokee 2 Dr.(1981-83)	85=CJ-5 (1981-83)	66=Comanche 2WD-7 Ft. Box(1986)	26=J10 Truck 8 Ft. Box(1981-86)
73=Cherokee 2WD-2 Dr.(1984-86)	86=CJ-6(1981)	63=Comanche 4WD-6 Ft. Box(1986)	27=J-20 Truck 8 Ft. Box(1981-86)
74=Cherokee 2WD-4 Dr.(1984-86)	87=CJ-7(1981-86)	65=Comanche 4WD-7 Ft. Box(1986)	15=Wagoneer 4 Dr.(1981-83)
18=Cherokee 4 Dr.(1981-83)	88=CJ-8, Scrambler(1981-86)	15=Grand Wagoneer 4 Dr.(1984-86)	75=Wagoneer 4WD-4 Dr.(1984-86)
77=Cherokee 4WD-2 Dr.(1984-86)			

BODY
CJ=CJ-5, CJ-6, CJ-7, CJ-8, Scrambler(1981-86)
MJ=Comanche Pickup(1986)

STYLES
SJ=Wagoneer(1981-83), Grand Wagoneer(1984-86), Cherokee(1981-83), J-10, J-20(1981-86)
XJ=Wagoneer(1984-86), Cherokee(1984-86)

AR = Use as Required - = Non Illustrated Part P.A.R. = Paint as Required

« RETURN TO GROUP INDEX

BRAKES, REAR AMC LARGE AXLE OR DANA MODEL 44 SJ CHEROKEE, SJ WAGONEER, J10
Figure 5-2400

81J05 2400

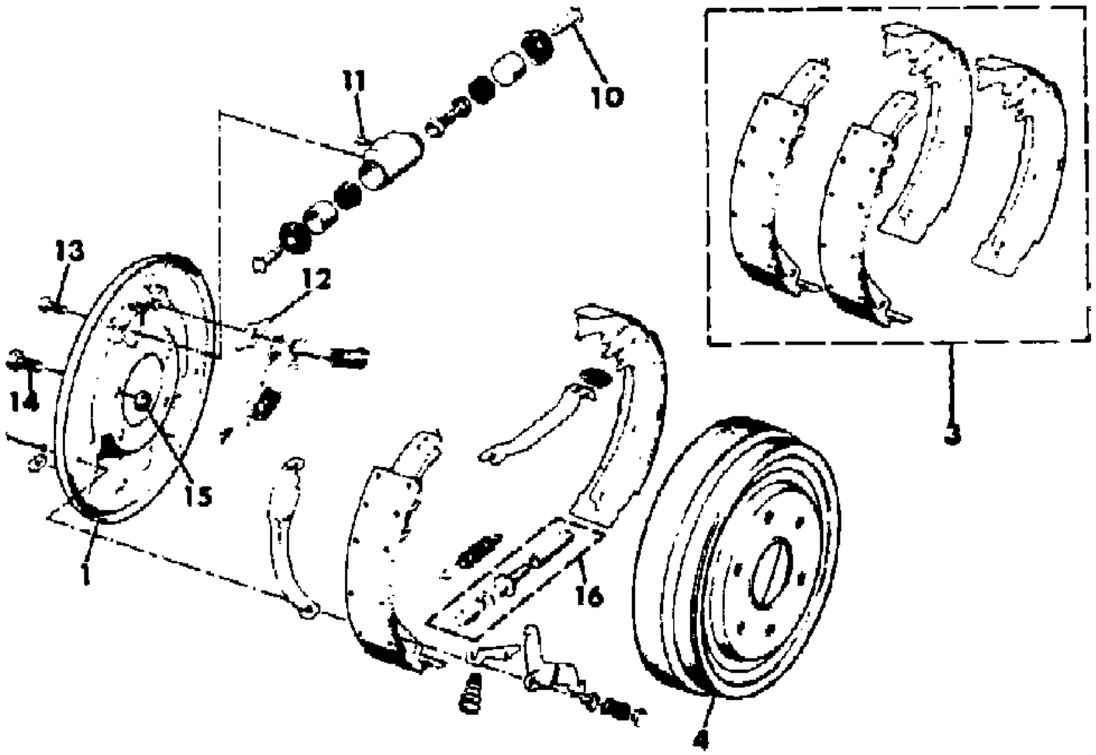

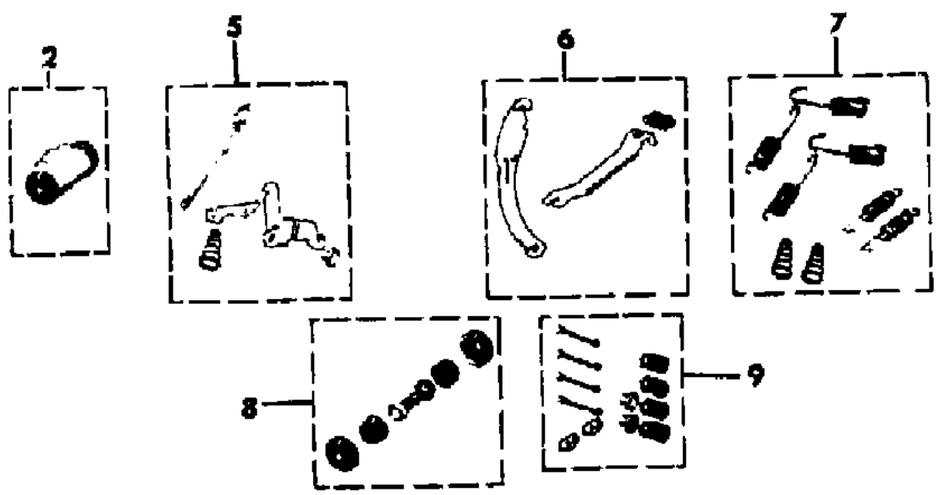

ITEM	PART NUMBER	QTY	BODY	MODEL	DESCRIPTION
1					PLATE, Backing
					U.S., CANADA
	J812 7779	1			Right
	J812 7778	1			Left
					EXPORT
	J813 0746	1			Right
	J813 0745	1			Left
2					CYLINDER, Wheel
	J812 9723	2			U.S., CANADA
	J813 0747	2			EXPORT
3					SHOE PACKAGE ***
	J812 7782	1			U.S., CANADA
	J813 0744	1			EXPORT
4					DRUM, Brake
	J535 9281	2			U.S., CANADA
	J535 2266	2			EXPORT
5					ADJUSTER PACKAGE ***
	J812 4514	1			Right
	J812 4513	1			Left
6					LEVER AND STRUT PACKAGE ***
	J812 7788	1			Right
	J812 7787	1			Left
7	J812 7783	1			SPRING PACKAGE ***
8					REPAIR PACKAGE, Wheel Cylinder
	J812 4566	2			U.S., CANADA
	J813 0748	2			EXPORT
9					PIN PACKAGE
	J812 7784	1			U.S., CANADA
	J812 4515	1			EXPORT
10	J812 7781	2			LINK
11	J812 9725	2			SCREW, Bleeder
12	J812 7780	2			PLATE, Guide
13	J092 0307	4			BOLT
14	J812 4850	8			BOLT
15	J941 3215	8			BOLT
16					ADJUSTER PACKAGE ***
	J812 7786	1			Right
	J812 7785	1			Left

MODEL CODES

16=Cherokee 2 Dr.(1981-83)
17=Cherokee 2 Dr.(1981-83)
73=Cherokee 2WD-2 Dr.(1984-86)
74=Cherokee 2WD-4 Dr.(1984-86)
18=Cherokee 4 Dr.(1981-83)
77=Cherokee 4WD-2 Dr.(1984-86)
78=Cherokee 4WD-4 Dr.(1984-86)
85=CJ-5 (1981-83)
86=CJ-6(1981)
87=CJ-7(1981-86)
88=CJ-8, Scrambler(1981-86)
64=Comanche 2WD-6 Ft. Box(1986)
66=Comanche 2WD-7 Ft. Box(1986)
63=Comanche 4WD-6 Ft. Box(1986)
65=Comanche 4WD-7 Ft. Box(1986)
15=Grand Wagoneer 4 Dr.(1984-86)
25=J-10 Truck 7 Ft. Box(1981-84)
26=J10 Truck 8 Ft. Box(1981-86)
27=J-20 Truck 8 Ft. Box(1981-86)
15=Wagoneer 4 Dr.(1981-83)
75=Wagoneer 4WD-4 Dr.(1984-86)

BODY
CJ=CJ-5, CJ-6, CJ-7, CJ-8, Scrambler(1981-86)
MJ=Comanche Pickup(1986)

STYLES
SJ=Wagoneer(1981-83), Grand Wagoneer(1984-86), Cherokee(1981-83), J-10, J-20(1981-86)
XJ=Wagoneer(1984-86), Cherokee(1984-86)

AR = Use as Required - = Non Illustrated Part P.A.R. = Paint as Required

« RETURN TO GROUP INDEX

BRAKES, REAR DANA MODEL 60 AXLE J20
Figure 5-2500

81J05 2500

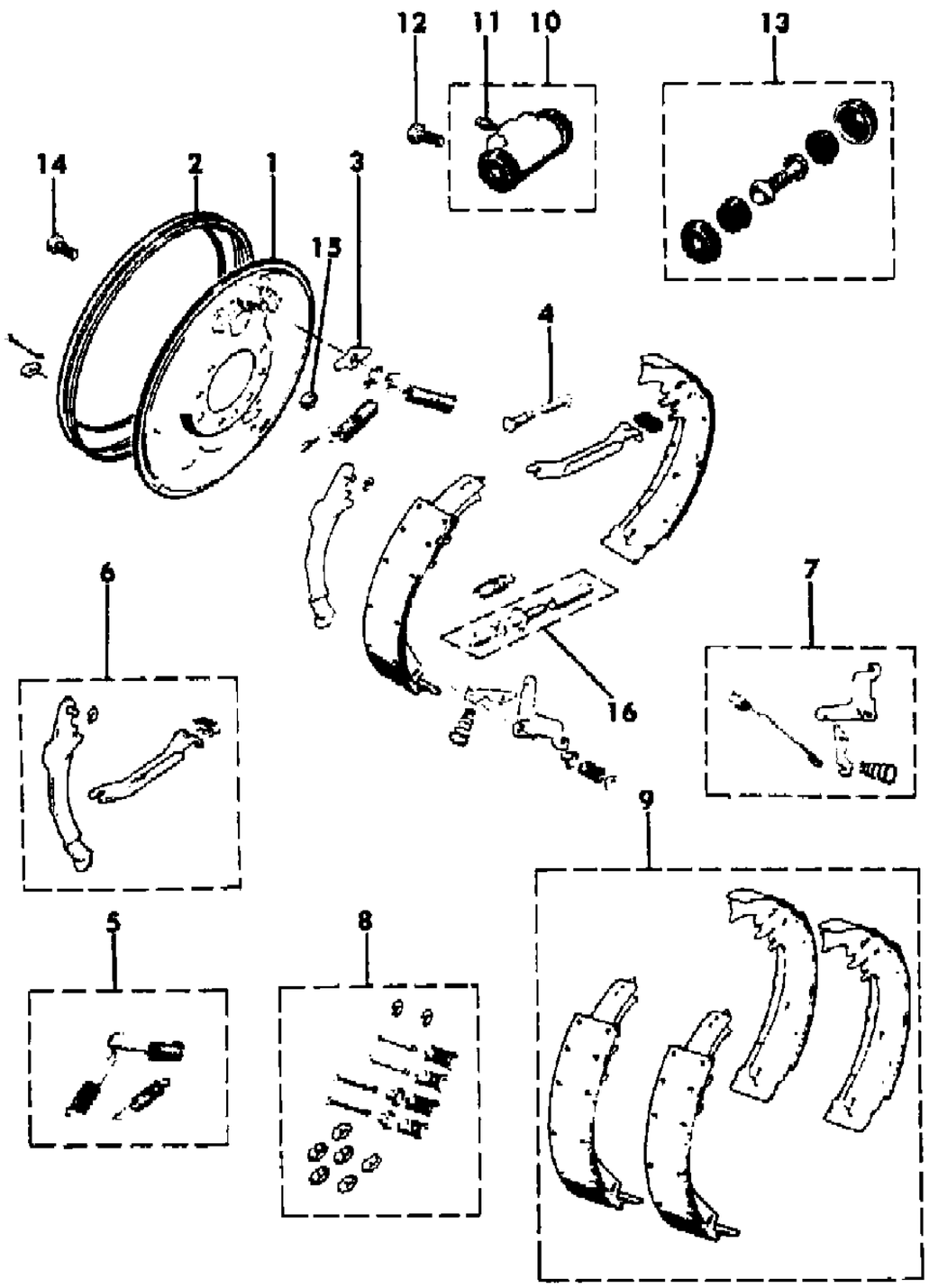

ITEM	PART NUMBER	QTY	BODY	MODEL	DESCRIPTION
1					PLATE, Backing
	J812 4523	1			Right
	J812 4522	1			Left
2	J535 9032	2			SHIELD, Splash
3	J812 4504	2			PLATE, Guide
4	J812 7781	4			LINK
5	J812 4527	2			SPRING PACKAGE ***
6					LEVER AND STRUT PACKAGE ***
	J812 4531	1			Right
	J812 4530	1			Left
7					ADJUSTER PACKAGE ***
	J812 4525	1			Right
	J812 4524	1			Left
8	J812 4526	1			PIN PACKAGE
9	J813 0362	1			SHOE PACKAGE ***
10	J812 9724	2			CYLINDER, Wheel
11	J812 9725	2			SCREW, Bleeder
12	J092 0307	4			BOLT
13	J812 8856	2			REPAIR PACKAGE, Wheel Cylinder
14	J941 9293	12			BOLT
15	J941 3215	12			NUT
16					ADJUSTER PACKAGE ***
	J812 4529	1			Right
	J812 4528	1			Left

MODEL CODES

16=Cherokee 2 Dr.(1981-83)
17=Cherokee 2 Dr.(1981-83)
73=Cherokee 2WD-2 Dr.(1984-86)
74=Cherokee 2WD-4 Dr.(1984-86)
18=Cherokee 4 Dr.(1981-83)
77=Cherokee 4WD-2 Dr.(1984-86)
78=Cherokee 4WD-4 Dr.(1984-86)
85=CJ-5 (1981-83)
86=CJ-6(1981)
87=CJ-7(1981-86)
88=CJ-8, Scrambler(1981-86)
64=Comanche 2WD-6 Ft. Box(1986)
66=Comanche 2WD-7 Ft. Box(1986)
63=Comanche 4WD-6 Ft. Box(1986)
65=Comanche 4WD-7 Ft. Box(1986)
15=Grand Wagoneer 4 Dr.(1984-86)
25=J-10 Truck 7 Ft. Box(1981-84)
26=J10 Truck 8 Ft. Box(1981-86)
27=J-20 Truck 8 Ft. Box(1981-86)
15=Wagoneer 4 Dr.(1981-83)
75=Wagoneer 4WD-4 Dr.(1984-86)

BODY
CJ=CJ-5, CJ-6, CJ-7, CJ-8, Scrambler(1981-86)
MJ=Comanche Pickup(1986)

STYLES
SJ=Wagoneer(1981-83), Grand Wagoneer(1984-86), Cherokee(1981-83), J-10, J-20(1981-86)
XJ=Wagoneer(1984-86), Cherokee(1984-86)

AR = Use as Required - = Non Illustrated Part P.A.R. = Paint as Required

« RETURN TO GROUP INDEX

BRAKES, REAR DANA MODEL 60 AXLE J20
Figure 5-2500

81J05 2600

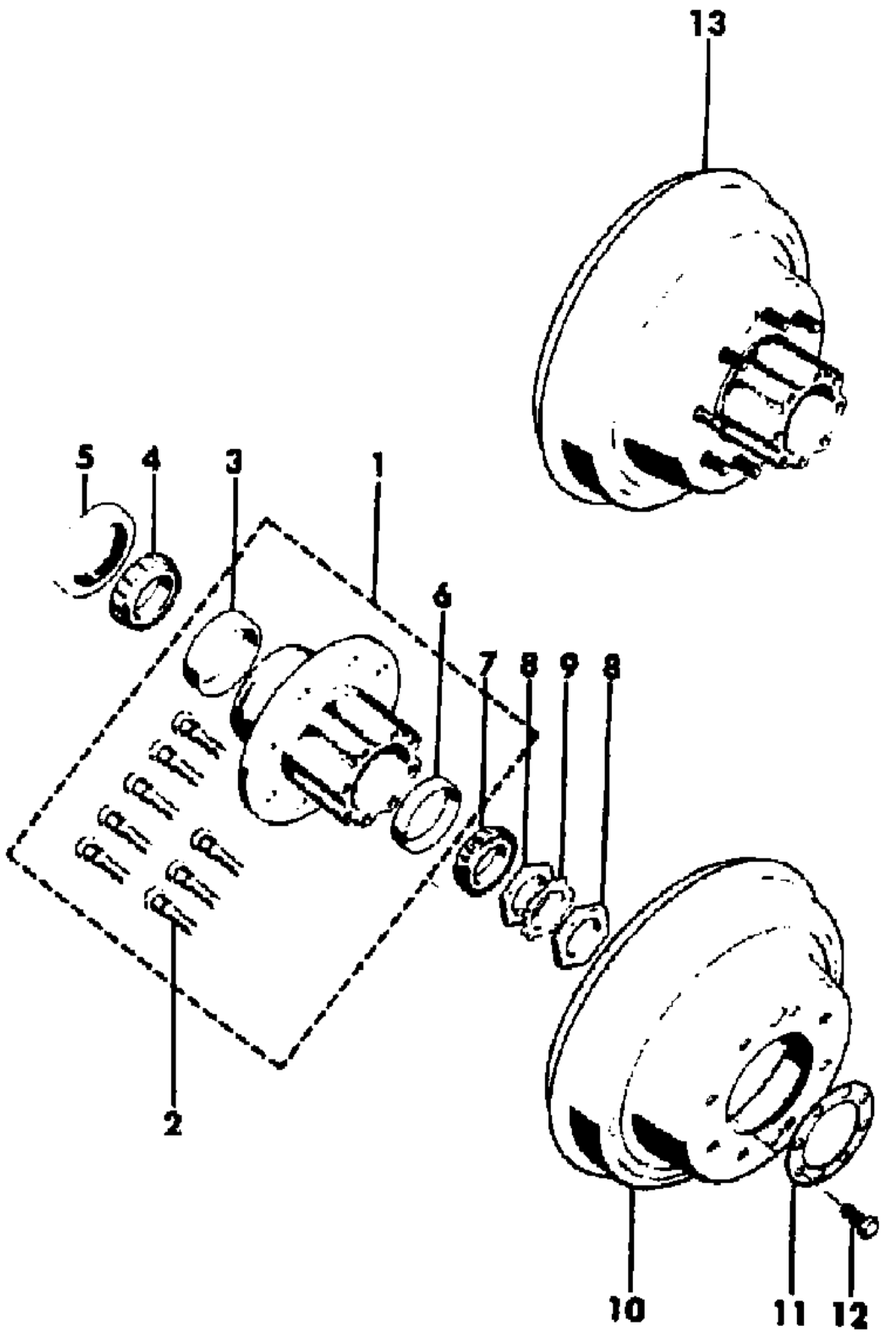

ITEM	PART NUMBER	QTY	BODY	MODEL	DESCRIPTION
1	J812 4956	2			HUB ASSEMBLY ***
2	J812 4958	16			STUD, Wheel
3	J812 4840	2			CUP, Bearing
4	J535 2661	2			CONE, Bearing
5	J535 2786	2			SEAL
6	J099 2336	2			CUP, Bearing
7	J099 2276	2			CONE, Bearing
8	J099 2300	4			NUT
9	J400 4829	2			WASHER
10	J812 4957	2			DRUM, Brake
11	J535 2662	2			GASKET
12	J400 6129	16			BOLT
13	J535 2286	2			HUB AND DRUM ASSEMBLY ***

MODEL CODES

16=Cherokee 2 Dr.(1981-83)
17=Cherokee 2 Dr.(1981-83)
73=Cherokee 2WD-2 Dr.(1984-86)
74=Cherokee 2WD-4 Dr.(1984-86)
18=Cherokee 4 Dr.(1981-83)
77=Cherokee 4WD-2 Dr.(1984-86)
78=Cherokee 4WD-4 Dr.(1984-86)
85=CJ-5 (1981-83)
86=CJ-6(1981)
87=CJ-7(1981-86)
88=CJ-8, Scrambler(1981-86)
64=Comanche 2WD-6 Ft. Box(1986)
66=Comanche 2WD-7 Ft. Box(1986)
63=Comanche 4WD-6 Ft. Box(1986)
65=Comanche 4WD-7 Ft. Box(1986)
15=Grand Wagoneer 4 Dr.(1984-86)
25=J-10 Truck 7 Ft. Box(1981-84)
26=J10 Truck 8 Ft. Box(1981-86)
27=J-20 Truck 8 Ft. Box(1981-86)
15=Wagoneer 4 Dr.(1981-83)
75=Wagoneer 4WD-4 Dr.(1984-86)

BODY
CJ=CJ-5, CJ-6, CJ-7, CJ-8, Scrambler(1981-86)
MJ=Comanche Pickup(1986)

STYLES
SJ=Wagoneer(1981-83), Grand Wagoneer(1984-86), Cherokee(1981-83), J-10, J-20(1981-86)
XJ=Wagoneer(1984-86), Cherokee(1984-86)

AR = Use as Required - = Non Illustrated Part P.A.R. = Paint as Required

« RETURN TO GROUP INDEX

GROUP 6 - CLUTCH

ILLUSTRATION TITLE	GROUP-FIG. NO.
CLUTCH AND COVER ASSEMBLY ALL MODELS	Fig. 6-100
BELLHOUSING AND COVER 2.5L AMC FOUR CYLINDER CJ-5,6,7,8, SCRAMBLER	Fig. 6-200
BELLHOUSING AND COVER, CJ 2.5L GM FOUR CYLINDER, DIESEL OR RIGHT HAND DRIVE 4.2L SIX CYLINDER	Fig. 6-300
BELLHOUSING AND COVER, CJ 4.2L SIX CYLINDER LEFT HAND DRIVE, 5.0L EIGHT CYLINDER	Fig. 6-400
BELLHOUSING AND COVER XJ CHEROKEE, XJ WAGONEER, COMANCHE	Fig. 6-500
BELLHOUSING AND COVER SJ CHEROKEE, SJ WAGONEER, J10, J20	Fig. 6-600
PEDAL, CLUTCH LINKAGE 2.5L AMC FOUR CYLINDER CJ-5,6,7,8, SCRAMBLER	Fig. 6-700
PEDAL, CLUTCH LINKAGE, CJ 2.5L GM FOUR CYLINDER, DIESEL OR RIGHT HAND DRIVE 4.2L SIX CYLINDER	Fig. 6-800
PEDAL, CLUTCH LINKAGE, CJ 4.2L SIX CYLINDER LEFT HAND DRIVE 5.0L EIGHT CYLINDER	Fig. 6-900
PEDAL, CLUTCH LINKAGE XJ CHEROKEE, XJ WAGONEER, COMANCHE	Fig. 6-1000
PEDAL, CLUTCH LINKAGE SJ CHEROKEE, SJ WAGONEER, J10, J20	Fig. 6-1100
PEDAL, CLUTCH LINKAGE EXPORT RIGHT HAND DRIVE SJ CHEROKEE, SJ WAGONEER, J10, J20	Fig. 6-1200

ILLUSTRATION NOT AVAILABLE AT TIME OF PUBLICATION

CLUTCH AND COVER ASSEMBLY ALL MODELS
Figure 6-100

81J06 100

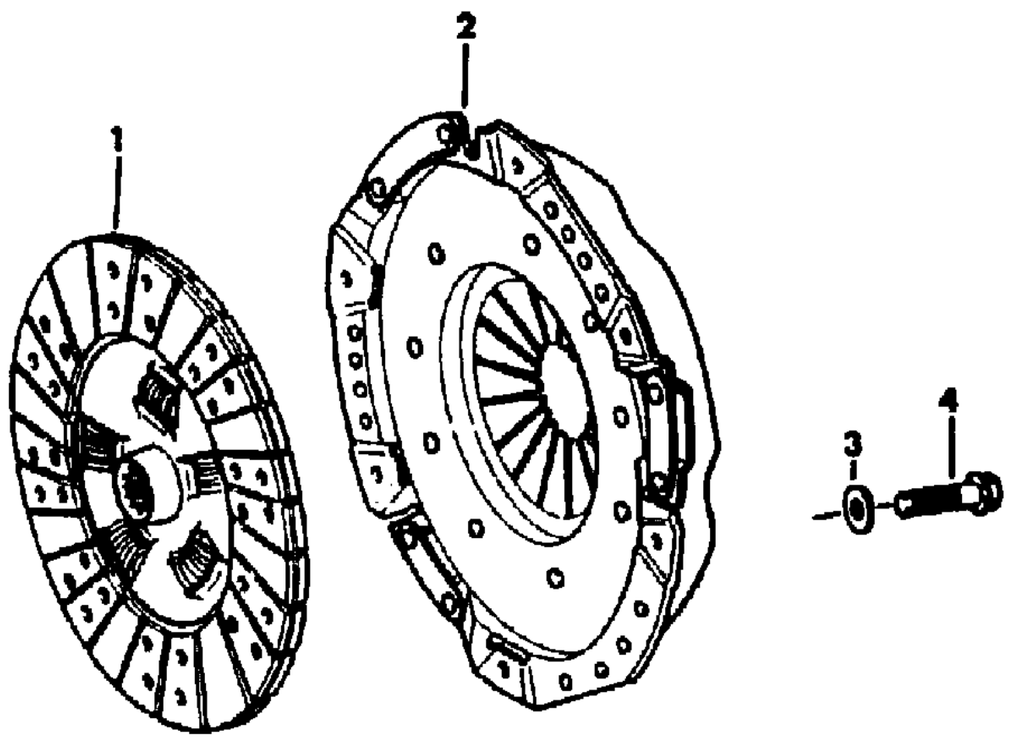

ITEM	PART NUMBER	QTY	BODY	MODEL	DESCRIPTION
1					PLATE, Driven
					2.5L GM Four Cylinder
	J813 2577	1	CJ		1981-83
					2.5L AMC Four Cylinder
	5300 0168	1	CJ		1983-84
	5300 1420	1	CJ		1985-86
	5300 0168	1	XJ		1984-85
					1986
	5300 3007	1	XJ,MJ		9.25" O.D.
	5300 1420	1	XJ,MJ		9.75" O.D.
					2.8L GM Six Cylinder
	8350 0806	1	XJ		1984
	8350 1946	1	XJ		1985
	8350 2186	1	XJ,MJ		1986
					4.2L Six Cylinder
					1981
	J536 0174	1	CJ,SJ		10.5" O.D.
	J535 7437	1	CJ,SJ		11.0" O.D.
	J324 0278	1	CJ,SJ		1982-86
					5.0L Eight Cylinder
	J536 0173	1	CJ		1981
					5.9L Eight Cylinder
	J318 4867	1	SJ		1981-86
					Diesel
	J806 0424	1	CJ		1981-85: EXPORT
	J072 9376	1	CJ		1986: EXPORT
	J072 9376	1	XJ,MJ		1985-86
2					COVER, Clutch
					2.5L GM Four Cylinder
	J813 2576	1	CJ		1981-83
					2.5L AMC Four Cylinder
	5300 0167	1	CJ		1983-84
	5300 2711	1	CJ		1985-86
	5300 0167	1	XJ		1984-85
					1986
	5300 3006	1	XJ,MJ		9.25" O.D.
	5300 2711	1	XJ,MJ		9.75" O.D.
					2.8L GM Six Cylinder
	8350 0804	1	XJ		1984

MODEL CODES

16=Cherokee 2 Dr.(1981-83)	78=Cherokee 4WD-4 Dr.(1984-86)	64=Comanche 2WD-6 Ft. Box(1986)	25=J-10 Truck 7 Ft. Box(1981-84)
17=Cherokee 2 Dr.(1981-83)	85=CJ-5 (1981-83)	66=Comanche 2WD-7 Ft. Box(1986)	26=J10 Truck 8 Ft. Box(1981-86)
73=Cherokee 2WD-2 Dr.(1984-86)	86=CJ-6(1981)	63=Comanche 4WD-6 Ft. Box(1986)	27=J-20 Truck 8 Ft. Box(1981-86)
74=Cherokee 2WD-4 Dr.(1984-86)	87=CJ-7(1981-86)	65=Comanche 4WD-7 Ft. Box(1986)	15=Wagoneer 4 Dr.(1981-83)
18=Cherokee 4 Dr.(1981-83)	88=CJ-8, Scrambler(1981-86)	15=Grand Wagoneer 4 Dr.(1984-86)	75=Wagoneer 4WD-4 Dr.(1984-86)
77=Cherokee 4WD-2 Dr.(1984-86)			

BODY
CJ=CJ-5, CJ-6, CJ-7, CJ-8, Scrambler(1981-86)
MJ=Comanche Pickup(1986)

STYLES
SJ=Wagoneer(1981-83), Grand Wagoneer(1984-86), Cherokee(1981-83), J-10, J-20(1981-86)
XJ=Wagoneer(1984-86), Cherokee(1984-86)

AR = Use as Required - = Non Illustrated Part P.A.R. = Paint as Required

CLUTCH AND COVER ASSEMBLY ALL MODELS
Figure 6-100

81J06 100

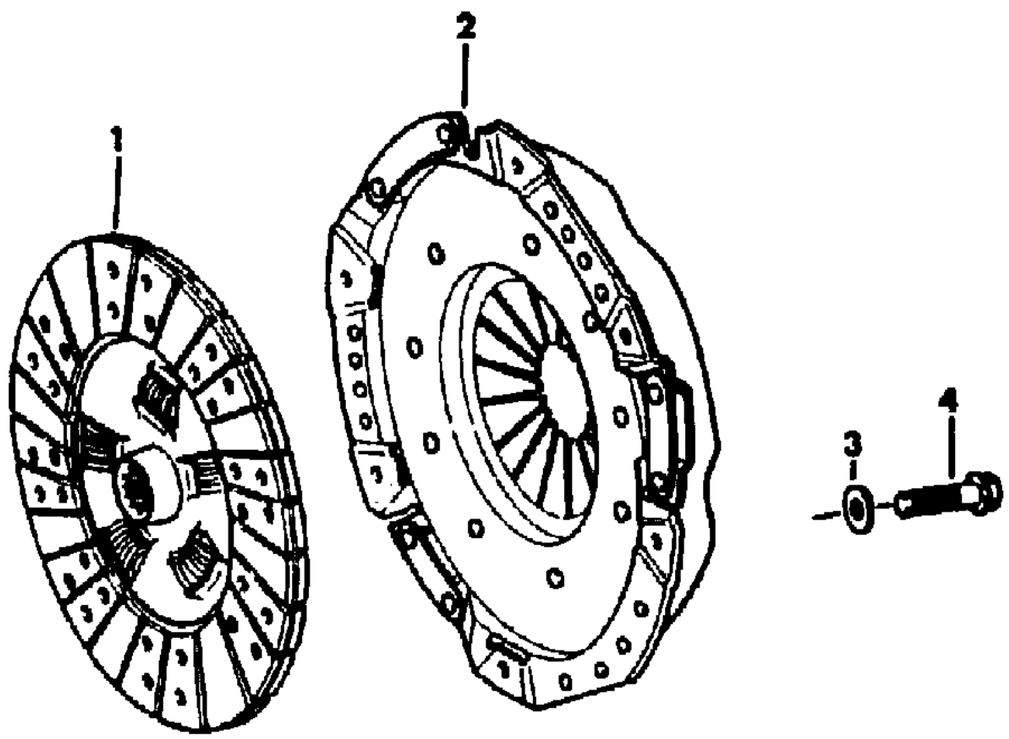

ITEM	PART NUMBER	QTY	BODY	MODEL	DESCRIPTION
	8350 1947	1	XJ		1985-86
					4.2L Six Cylinder
					1981
	J318 4908	1	CJ,SJ		10.5" Plate Diameter
	J535 7436	1	CJ,SJ		11.0" Plate Diameter
	J324 0277	1	CJ,SJ		1982-86
					5.0L Eight Cylinder
	J318 4908	1	CJ		1981
					5.9L Eight Cylinder
	J318 4955	1	SJ		1981-86
					Diesel
	J806 0423	1	CJ		1981-85: EXPORT
	J072 3977	1	CJ		1986: EXPORT
	J072 3977	1	XJ,MJ		1985-86
3					WASHER
					2.5L GM Four Cylinder
	S150 0191	6	CJ		1981-83
					2.5L AMC Four Cylinder
	1150 0221	6	CJXJMJ		1983-86
					2.8L GM Six Cylinder
	S943 9511	6	XJ,MJ		1984-86
					Diesel
	J806 0064	6	CJ		1981-85: EXPORT
	T140 2092	6	CJ		1986: EXPORT
	J305 5022	6	XJ		1985
	T140 2092	6	XJ,MJ		1986
4					BOLT
					2.5L GM Four Cylinder
	S150 0917	6	CJ		1981-83
					2.5L AMC Four Cylinder
	3420 1373	6	CJXJMJ		1983-86
					2.8L GM Six Cylinder
	S150 0917	6	XJ,MJ		1984-86
					4.2L Six Cylinder
	J400 4165	6	CJ,SJ		1981-86
					5.0L Eight Cylinder
	J400 4165	6	CJ		1981
					5.9L Eight Cylinder
	J400 4165	6	SJ		1981-86

MODEL CODES

16=Cherokee 2 Dr.(1981-83)	78=Cherokee 4WD-4 Dr.(1984-86)	64=Comanche 2WD-6 Ft. Box(1986)	25=J-10 Truck 7 Ft. Box(1981-84)
17=Cherokee 2 Dr.(1981-83)	85=CJ-5 (1981-83)	66=Comanche 2WD-7 Ft. Box(1986)	26=J10 Truck 8 Ft. Box(1981-86)
73=Cherokee 2WD-2 Dr.(1984-86)	86=CJ-6(1981)	63=Comanche 4WD-6 Ft. Box(1986)	27=J-20 Truck 8 Ft. Box(1981-86)
74=Cherokee 2WD-4 Dr.(1984-86)	87=CJ-7(1981-86)	65=Comanche 4WD-7 Ft. Box(1986)	15=Wagoneer 4 Dr.(1981-83)
18=Cherokee 4 Dr.(1981-83)	88=CJ-8, Scrambler(1981-86)	15=Grand Wagoneer 4 Dr.(1984-86)	75=Wagoneer 4WD-4 Dr.(1984-86)
77=Cherokee 4WD-2 Dr.(1984-86)			

BODY
CJ=CJ-5, CJ-6, CJ-7, CJ-8, Scrambler(1981-86)
MJ=Comanche Pickup(1986)

STYLES
SJ=Wagoneer(1981-83), Grand Wagoneer(1984-86), Cherokee(1981-83), J-10, J-20(1981-86)
XJ=Wagoneer(1984-86), Cherokee(1984-86)

AR = Use as Required - = Non Illustrated Part P.A.R. = Paint as Required

CLUTCH AND COVER ASSEMBLY ALL MODELS
Figure 6-100

81J06 100

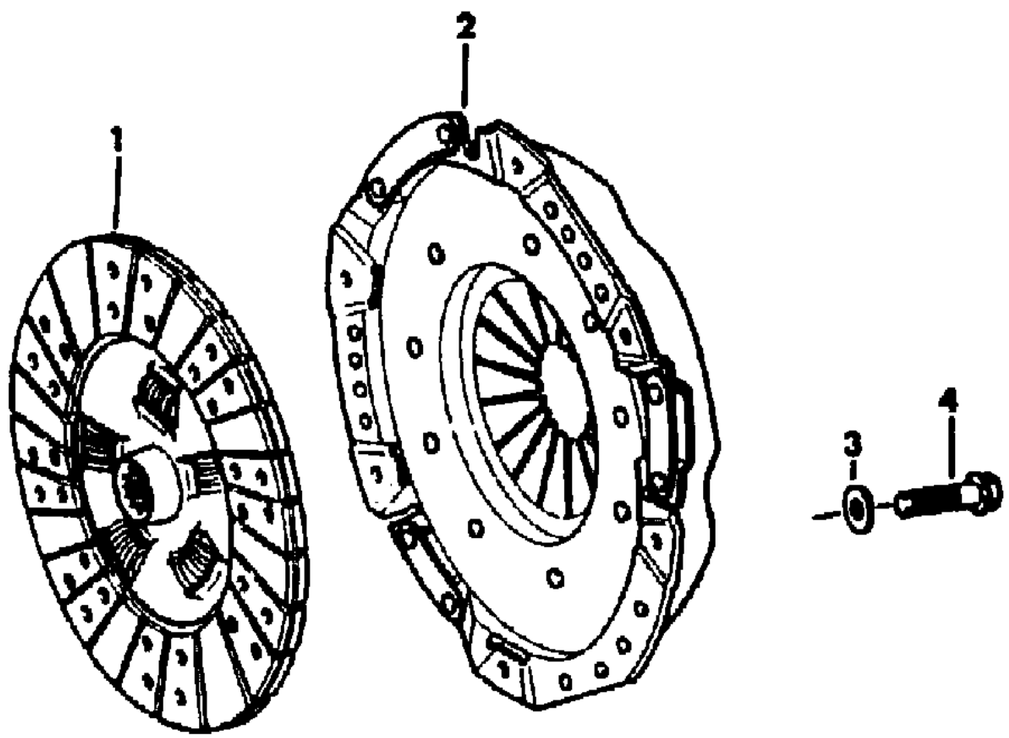

ITEM	PART NUMBER	QTY	BODY	MODEL	DESCRIPTION
					Diesel
	J806 0033	6	CJ		1981-85: EXPORT
	J300 9059	6	CJ		1986: EXPORT
	J300 9059	6	XJ,MJ		1985-86

MODEL CODES
16=Cherokee 2 Dr.(1981-83)
17=Cherokee 2 Dr.(1981-83)
73=Cherokee 2WD-2 Dr.(1984-86)
74=Cherokee 2WD-4 Dr.(1984-86)
18=Cherokee 4 Dr.(1981-83)
77=Cherokee 4WD-2 Dr.(1984-86)
78=Cherokee 4WD-4 Dr.(1984-86)
85=CJ-5 (1981-83)
86=CJ-6(1981)
87=CJ-7(1981-86)
88=CJ-8, Scrambler(1981-86)
64=Comanche 2WD-6 Ft. Box(1986)
66=Comanche 2WD-7 Ft. Box(1986)
63=Comanche 4WD-6 Ft. Box(1986)
65=Comanche 4WD-7 Ft. Box(1986)
15=Grand Wagoneer 4 Dr.(1984-86)
25=J-10 Truck 7 Ft. Box(1981-84)
26=J10 Truck 8 Ft. Box(1981-86)
27=J-20 Truck 8 Ft. Box(1981-86)
15=Wagoneer 4 Dr.(1981-83)
75=Wagoneer 4WD-4 Dr.(1984-86)

BODY
CJ=CJ-5, CJ-6, CJ-7, CJ-8, Scrambler(1981-86)
MJ=Comanche Pickup(1986)

STYLES
SJ=Wagoneer(1981-83), Grand Wagoneer(1984-86), Cherokee(1981-83), J-10, J-20(1981-86)
XJ=Wagoneer(1984-86), Cherokee(1984-86)

AR = Use as Required - = Non Illustrated Part P.A.R. = Paint as Required

BELLHOUSING AND COVER 2.5L AMC FOUR CYLINDER CJ-5,6,7,8, SCRAMBLER
Figure 6-200

81J06 200

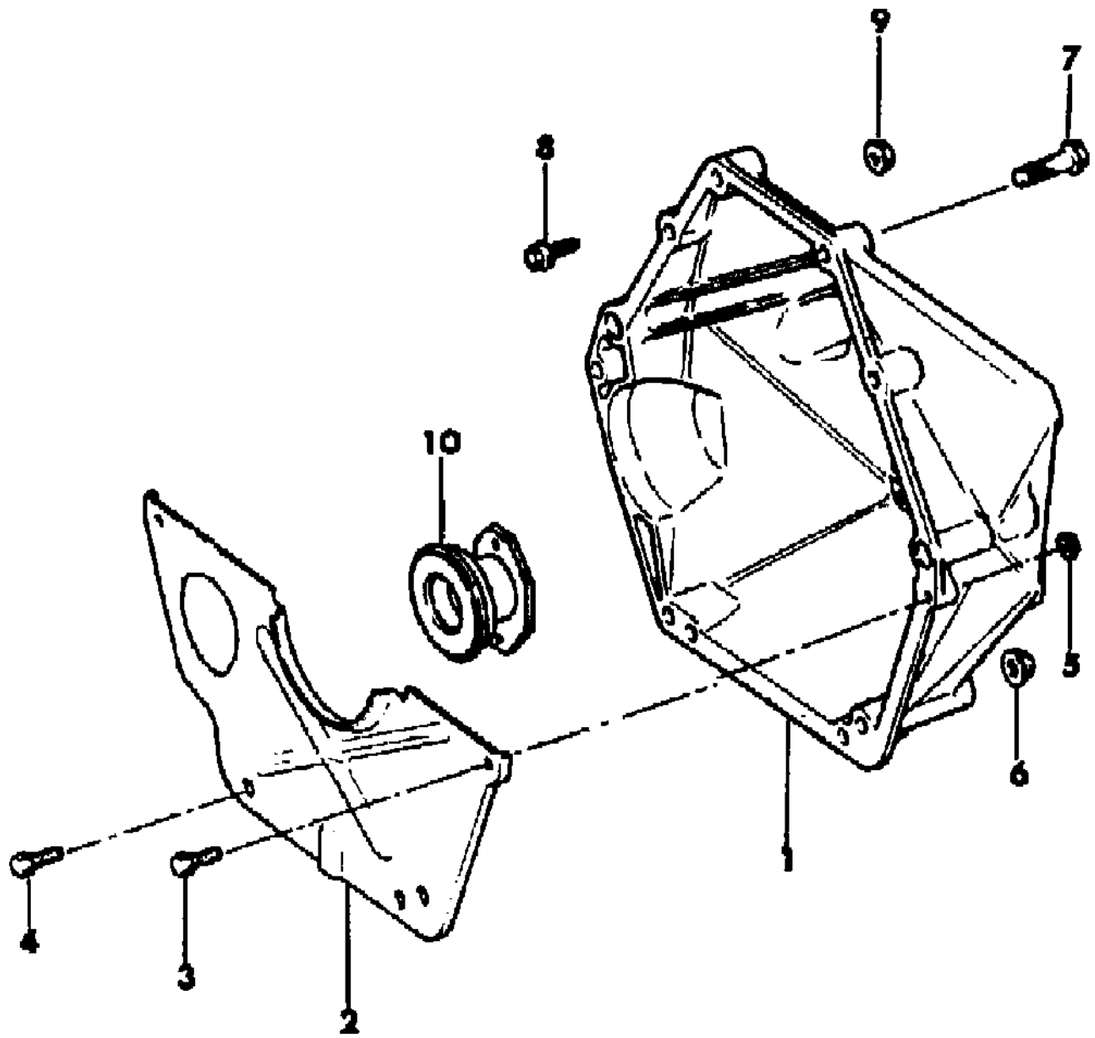

ITEM	PART NUMBER	QTY	BODY	MODEL	DESCRIPTION
1	5200 0067	1			HOUSING, Clutch
2	5300 0357	1			COVER, Housing
3	1150 2628	2			BOLT
4	1150 5098	2			BOLT
5	J420 0046	2			NUT
6	1150 2723	2			NUT
7					BOLT
	1150 4922	AR			M12-1.75x50mm, Hex Head
	3420 1803	AR			M12-1.75x80mm, Torx Head
	3420 1465	AR			M12-1.75x80mm, Hex Head
8					BOLT
	J400 4370	AR			7/16-14x2.75"
	J400 1885	AR			3/8-16x2.19"
9	1150 2813	AR			NUT
10	5300 0175	1			SLEEVE, Includes Bearing

MODEL CODES
16=Cherokee 2 Dr.(1981-83)
17=Cherokee 2 Dr.(1981-83)
73=Cherokee 2WD-2 Dr.(1984-86)
74=Cherokee 2WD-4 Dr.(1984-86)
18=Cherokee 4 Dr.(1981-83)
77=Cherokee 4WD-2 Dr.(1984-86)
78=Cherokee 4WD-4 Dr.(1984-86)
85=CJ-5 (1981-83)
86=CJ-6(1981)
87=CJ-7(1981-86)
88=CJ-8, Scrambler(1981-86)
64=Comanche 2WD-6 Ft. Box(1986)
66=Comanche 2WD-7 Ft. Box(1986)
63=Comanche 4WD-6 Ft. Box(1986)
65=Comanche 4WD-7 Ft. Box(1986)
15=Grand Wagoneer 4 Dr.(1984-86)
25=J-10 Truck 7 Ft. Box(1981-84)
26=J10 Truck 8 Ft. Box(1981-86)
27=J-20 Truck 8 Ft. Box(1981-86)
15=Wagoneer 4 Dr.(1981-83)
75=Wagoneer 4WD-4 Dr.(1984-86)

BODY
CJ=CJ-5, CJ-6, CJ-7, CJ-8, Scrambler(1981-86)
MJ=Comanche Pickup(1986)

STYLES
SJ=Wagoneer(1981-83), Grand Wagoneer(1984-86), Cherokee(1981-83), J-10, J-20(1981-86)
XJ=Wagoneer(1984-86), Cherokee(1984-86)

AR = Use as Required - = Non Illustrated Part P.A.R. = Paint as Required

« RETURN TO GROUP INDEX

BELLHOUSING AND COVER, CJ 2.5L GM FOUR CYLINDER, DIESEL OR RIGHT HAND DRIVE 4.2L SIX CYLINDER
Figure 6-300

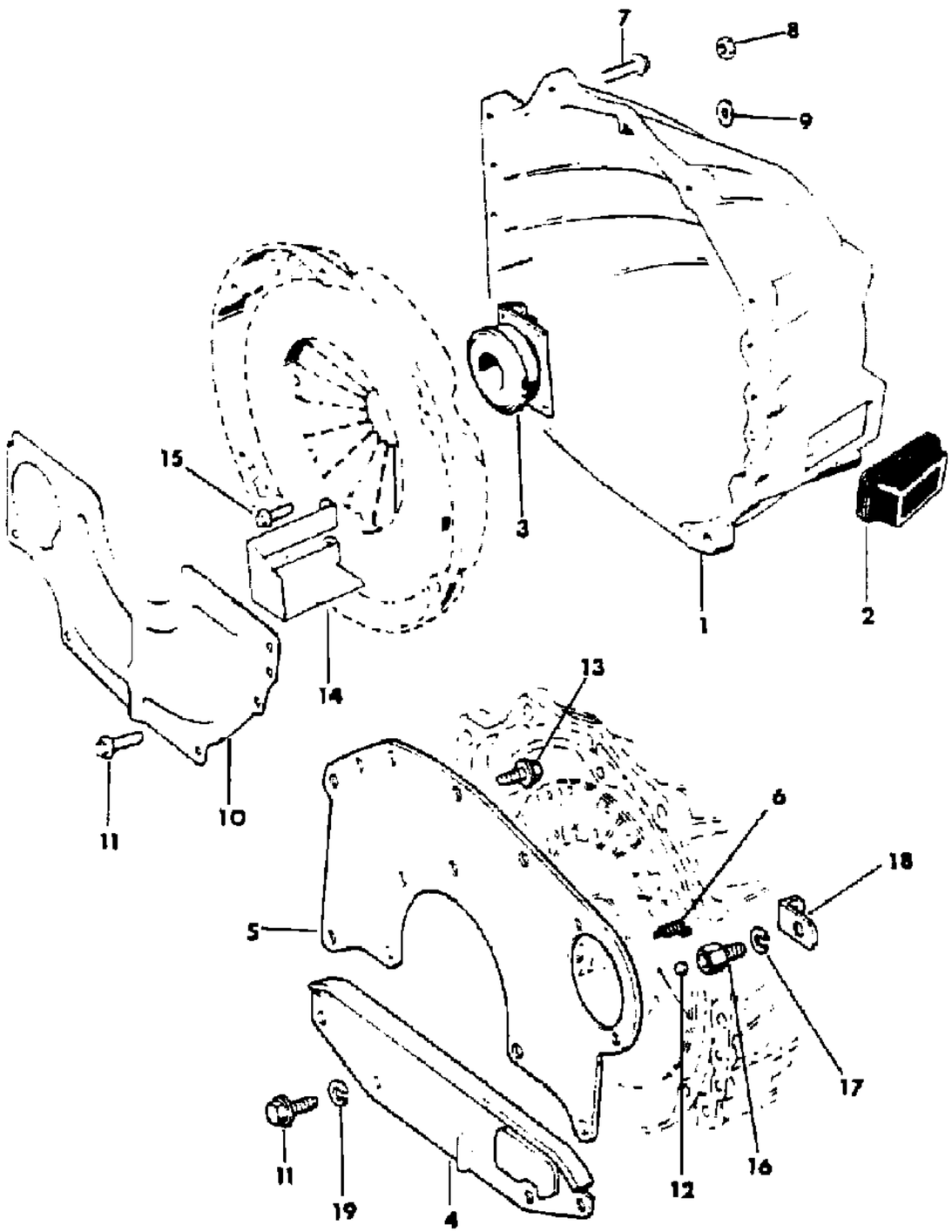

ITEM	PART NUMBER	QTY	BODY	MODEL	DESCRIPTION
1					HOUSING, Clutch
					2.5L GM Four Cylinder
	J325 1270	1			1981
	J325 1270	1			1982-83: With T4 or T5 Transmission
	J325 1256	1			1982-83: With T176 or T177 Transmission
					4.2L Six Cylinder, EXPORT
	J323 7585	1			1981: EXPORT, with SR4 Transmission
	J323 5827	1			1981-86: EXPORT, with T176 Transmission
	J323 7585	1			1982-86: EXPORT, with T4 or T5 Transmission
					Diesel
	J806 0421	1			1981-85
	J324 1860	1			1986
2					BOOT
	J323 6454	1			2.5L GM Four Cylinder
					4.2L Six Cylinder, EXPORT
	J323 6454	1			1981: With SR4, T4 or T5 Transmission
	J318 0370	1			1981-86: With T176 or T177 Transmission
	J318 0370	1			Diesel
3					SLEEVE, Includes Bearing
	J536 1614	1			2.5L GM Four Cylinder
	J536 1632	1			4.2L Six Cylinder, EXPORT
					Diesel
	J536 1614	1			1981-85
	T071 3033	1			1986
4					COVER, Housing
					Diesel
	J806 0422	1			1981-85
	T071 2702	1			1986
5					SPACER
	J321 3743	1			4.2L Six Cylinder, EXPORT
					Diesel
	J806 0192	1			1981-85
6					SPRING
	J322 2799	1			2.5L GM Four Cylinder
	J319 9503	1			4.2L Six Cylinder, EXPORT
	J319 9503	1			Diesel
7					BOLT
	J420 0400	6			2.5L GM Four Cylinder
					4.2L Six Cylinder, EXPORT

MODEL CODES

16=Cherokee 2 Dr.(1981-83)
17=Cherokee 2 Dr.(1981-83)
73=Cherokee 2WD-2 Dr.(1984-86)
74=Cherokee 2WD-4 Dr.(1984-86)
18=Cherokee 4 Dr.(1981-83)
77=Cherokee 4WD-2 Dr.(1984-86)
78=Cherokee 4WD-4 Dr.(1984-86)
85=CJ-5 (1981-83)
86=CJ-6(1981)
87=CJ-7(1981-86)
88=CJ-8, Scrambler(1981-86)
64=Comanche 2WD-6 Ft. Box(1986)
66=Comanche 2WD-7 Ft. Box(1986)
63=Comanche 4WD-6 Ft. Box(1986)
65=Comanche 4WD-7 Ft. Box(1986)
15=Grand Wagoneer 4 Dr.(1984-86)
25=J-10 Truck 7 Ft. Box(1981-84)
26=J10 Truck 8 Ft. Box(1981-86)
27=J-20 Truck 8 Ft. Box(1981-86)
15=Wagoneer 4 Dr.(1981-83)
75=Wagoneer 4WD-4 Dr.(1984-86)

BODY
CJ=CJ-5, CJ-6, CJ-7, CJ-8, Scrambler(1981-86)
MJ=Comanche Pickup(1986)

STYLES
SJ=Wagoneer(1981-83), Grand Wagoneer(1984-86), Cherokee(1981-83), J-10, J-20(1981-86)
XJ=Wagoneer(1984-86), Cherokee(1984-86)

AR = Use as Required - = Non Illustrated Part P.A.R. = Paint as Required

BELLHOUSING AND COVER, CJ 2.5L GM FOUR CYLINDER, DIESEL OR RIGHT HAND DRIVE 4.2L SIX CYLINDER
Figure 6-300

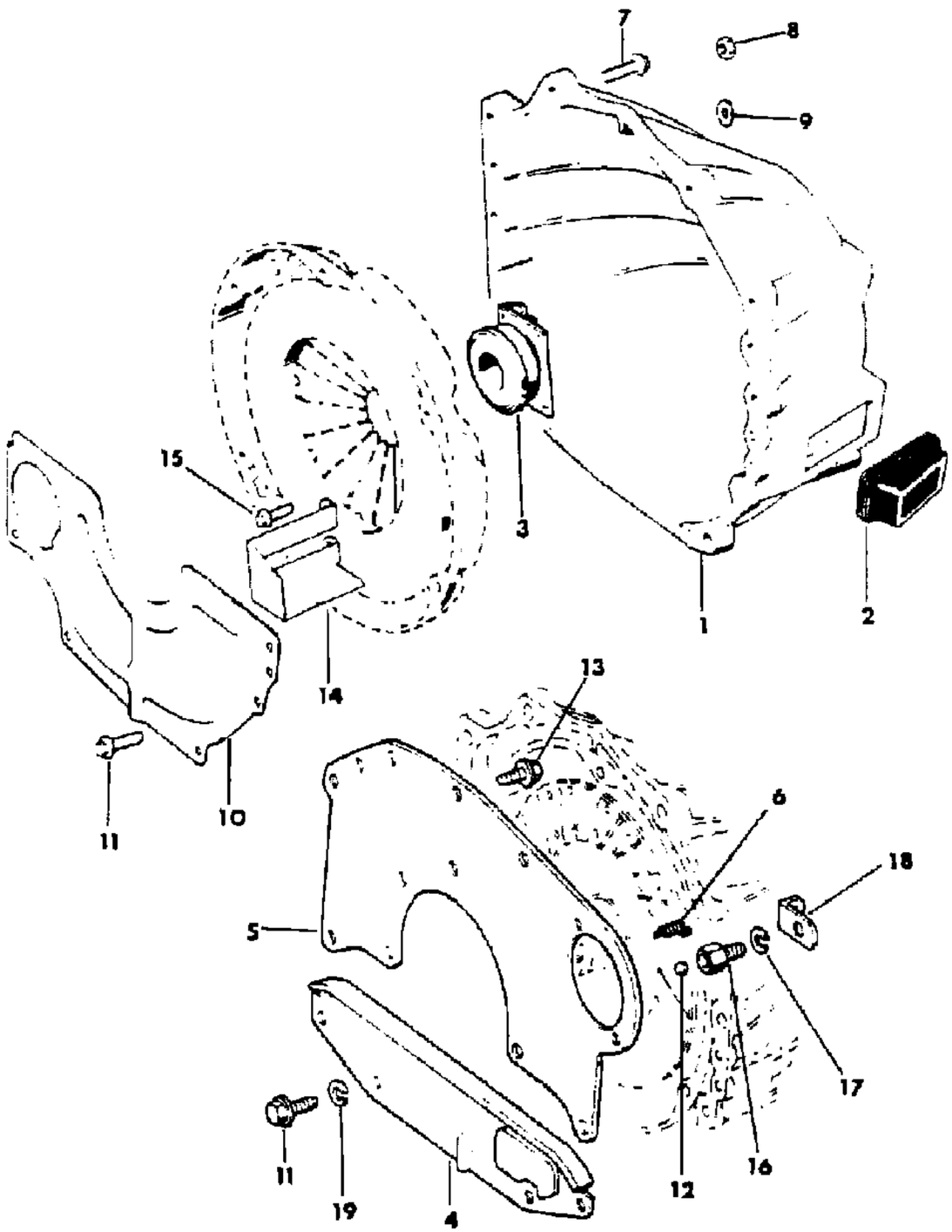

ITEM	PART NUMBER	QTY	BODY	MODEL	DESCRIPTION
	J400 1883	AR			3/8-16x1.625"
	J400 1885	AR			3/8-16x2.187"
	J400 4370	AR			7/16-14x2.75"
					Diesel
	J806 0006	3			M10-1.25x75mm
	J806 0582	2			M12-1.25x80mm
8					NUT
	J012 0377	AR			4.2L Six Cylinder, EXPORT
	J806 0059	AR			Diesel
9					WASHER, Lock
					Diesel
	J806 0065	AR			M10
	J806 0066	AR			M12
10					COVER, Housing
	J325 1259	1			2.5L GM Four Cylinder
	J321 3744	1			4.2L Six Cylinder, EXPORT
11					BOLT
	J400 5063	AR			2.5L GM Four Cylinder
	J400 0987	AR			4.2L Six Cylinder, EXPORT
	J806 0031	AR			Diesel
12	J016 9162	1			BALL, Pivot
13					BOLT
	J806 0123	1			Diesel
14	J323 6846	1			SHIELD, Slave Cylinder
15					BOLT
	J420 0402	2			2.5L GM Four Cylinder
	J999 7936	2			4.2L Six Cylinder, EXPORT
16					PIVOT, Clutch Lever
	J536 1377	1			Diesel
17					WASHER, Pivot
	J400 4809	1			Diesel
18					ANCHOR, Pivot
	J321 0423	1			Diesel
19					WASHER
	J806 0063	1			Diesel

MODEL CODES
16=Cherokee 2 Dr.(1981-83)
17=Cherokee 2 Dr.(1981-83)
73=Cherokee 2WD-2 Dr.(1984-86)
74=Cherokee 2WD-4 Dr.(1984-86)
18=Cherokee 4 Dr.(1981-83)
77=Cherokee 4WD-2 Dr.(1984-86)
78=Cherokee 4WD-4 Dr.(1984-86)
85=CJ-5 (1981-83)
86=CJ-6(1981)
87=CJ-7(1981-86)
88=CJ-8, Scrambler(1981-86)
64=Comanche 2WD-6 Ft. Box(1986)
66=Comanche 2WD-7 Ft. Box(1986)
63=Comanche 4WD-6 Ft. Box(1986)
65=Comanche 4WD-7 Ft. Box(1986)
15=Grand Wagoneer 4 Dr.(1984-86)
25=J-10 Truck 7 Ft. Box(1981-84)
26=J10 Truck 8 Ft. Box(1981-86)
27=J-20 Truck 8 Ft. Box(1981-86)
15=Wagoneer 4 Dr.(1981-83)
75=Wagoneer 4WD-4 Dr.(1984-86)

BODY
CJ=CJ-5, CJ-6, CJ-7, CJ-8, Scrambler(1981-86)
MJ=Comanche Pickup(1986)

STYLES
SJ=Wagoneer(1981-83), Grand Wagoneer(1984-86), Cherokee(1981-83), J-10, J-20(1981-86)
XJ=Wagoneer(1984-86), Cherokee(1984-86)

AR = Use as Required - = Non Illustrated Part P.A.R. = Paint as Required

« RETURN TO GROUP INDEX

BELLHOUSING AND COVER, CJ 4.2L SIX CYLINDER LEFT HAND DRIVE, 5.0L EIGHT CYLINDER
Figure 6-400

81J06 400

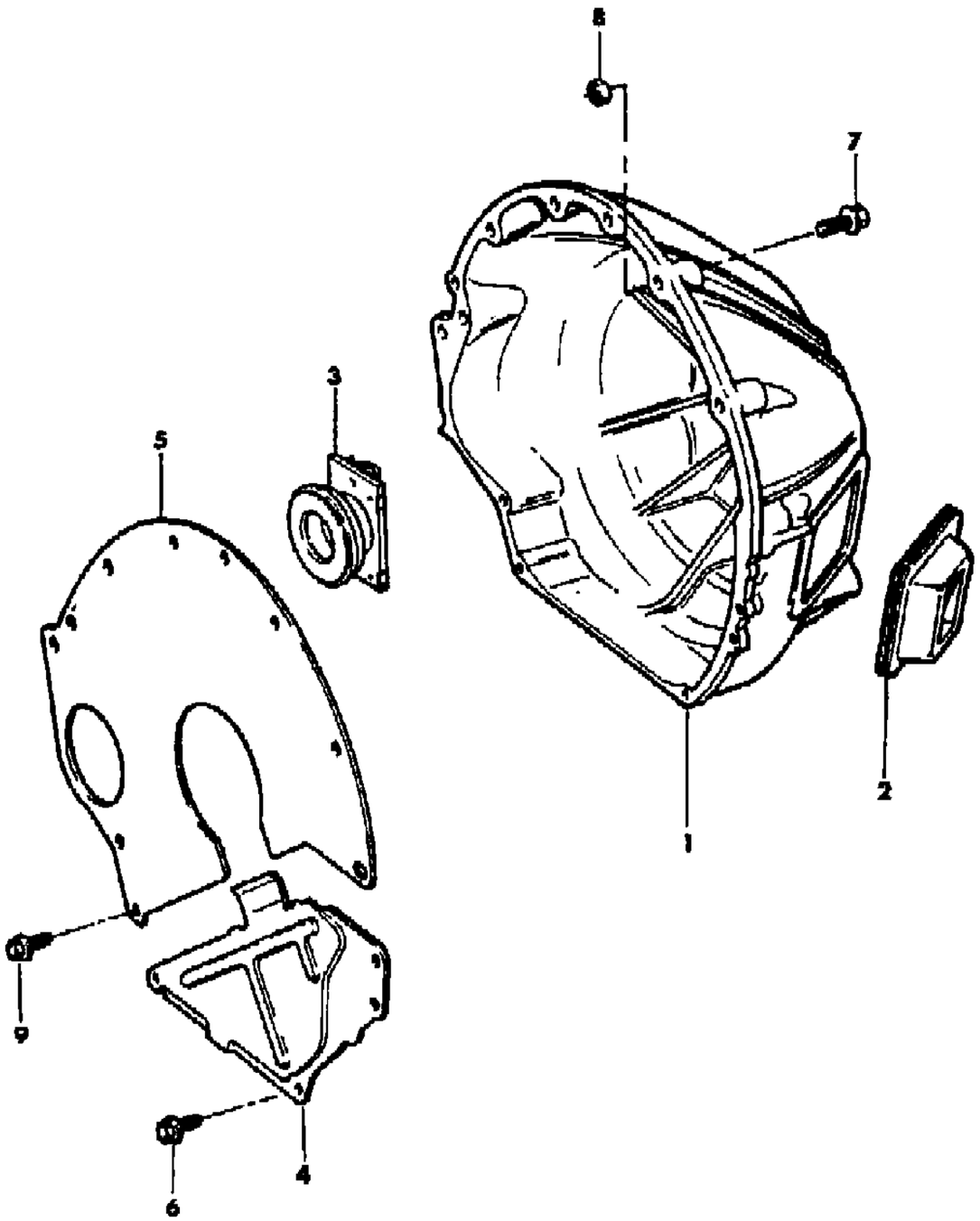

ITEM	PART NUMBER	QTY	BODY	MODEL	DESCRIPTION
1					HOUSING, Clutch
					4.2L Six Cylinder
	J323 6287	1			1981: With SR4 Transmission
	J322 3280	1			1981: With T176 or T177 Transmission
	J323 6287	1			1982-86: With T4 or T5 Transmission
	J323 6291	1			1982-86: With T176 or T177 Transmission
					5.0L Eight Cylinder
	J323 6291	1			1981: With T176 or T177 Transmission
2					BOOT
					4.2L Six Cylinder
	J323 6453	1			1981: With SR4 Transmission
	J318 0370	1			1981: With T176 or T177 Transmission
	J323 6453	1			1982-86
					5.0L Eight Cylinder
	J323 6453	1			1981
3	J536 1610	1			SLEEVE, Includes Bearing
4	J321 3744	1			COVER, Housing
5	J321 3743	1			SPACER
6	J400 0987	AR			BOLT
7					BOLT
	J400 1883	AR			3/8-16x1.625"
	J400 1885	AR			3/8-16x2.187"
	J400 4370	AR			7/16-14x2.75"
8	J012 0377	AR			NUT
9	J400 0987	AR			BOLT

MODEL CODES

16=Cherokee 2 Dr.(1981-83)	78=Cherokee 4WD-4 Dr.(1984-86)	64=Comanche 2WD-6 Ft. Box(1986)	25=J-10 Truck 7 Ft. Box(1981-84)
17=Cherokee 2 Dr.(1981-83)	85=CJ-5 (1981-83)	66=Comanche 2WD-7 Ft. Box(1986)	26=J10 Truck 8 Ft. Box(1981-86)
73=Cherokee 2WD-2 Dr.(1984-86)	86=CJ-6(1981)	63=Comanche 4WD-6 Ft. Box(1986)	27=J-20 Truck 8 Ft. Box(1981-86)
74=Cherokee 2WD-4 Dr.(1984-86)	87=CJ-7(1981-86)	65=Comanche 4WD-7 Ft. Box(1986)	15=Wagoneer 4 Dr.(1981-83)
18=Cherokee 4 Dr.(1981-83)	88=CJ-8, Scrambler(1981-86)	15=Grand Wagoneer 4 Dr.(1984-86)	75=Wagoneer 4WD-4 Dr.(1984-86)
77=Cherokee 4WD-2 Dr.(1984-86)			

BODY
CJ=CJ-5, CJ-6, CJ-7, CJ-8, Scrambler(1981-86)
MJ=Comanche Pickup(1986)

STYLES
SJ=Wagoneer(1981-83), Grand Wagoneer(1984-86), Cherokee(1981-83), J-10, J-20(1981-86)
XJ=Wagoneer(1984-86), Cherokee(1984-86)

AR = Use as Required - = Non Illustrated Part P.A.R. = Paint as Required

« RETURN TO GROUP INDEX

BELLHOUSING AND COVER XJ CHEROKEE, XJ WAGONEER, COMANCHE
Figure 6-500

81J06 500 A

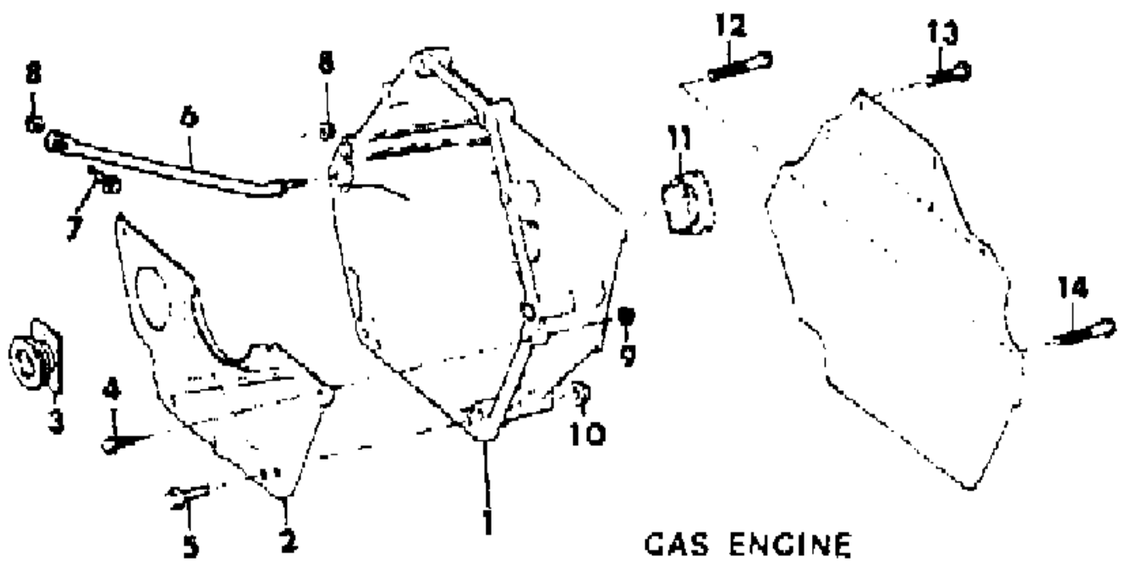

GAS ENGINE

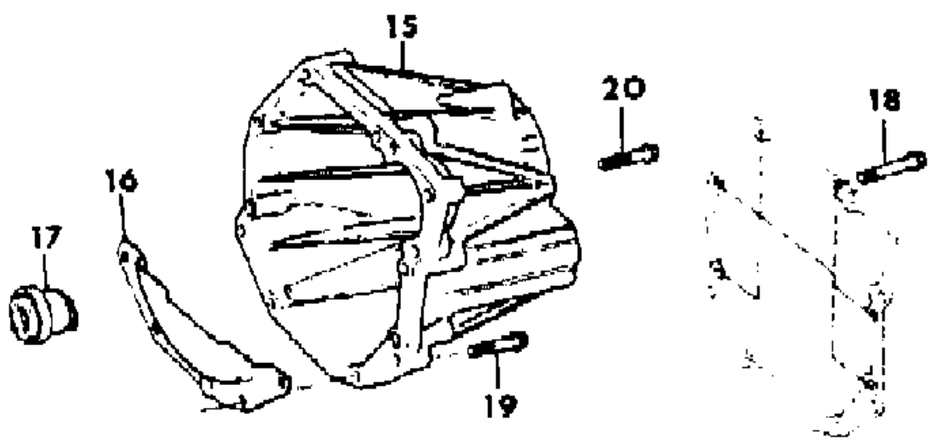

DIESEL ENGINE

ITEM	PART NUMBER	QTY	BODY	MODEL	DESCRIPTION
1					HOUSING, Clutch
	5200 0067	1			1984
	5300 1499	1			1985
	5300 2096	1			1986
2					COVER, Housing
					2.5L Four Cylinder
	5300 0357	1			1984-85
	5300 3382	1			1986
	5300 0363	1			2.8L Six Cylinder
3					SLEEVE, Includes Bearing
	5300 0175	1			2.5L Four Cylinder
	5300 1092	1			2.8L Six Cylinder
4	1150 2628	2			BOLT
5	1150 5098	2			BOLT
6	5300 1595	1			BRACE, Two Wheel Drive
7	3420 1389	1			BOLT, Two Wheel Drive
8	1150 2813	2			NUT
9	J420 0046	2			NUT
10					NUT
	1150 2723	2			1984-85
	1150 2813	2			1986
11	5300 3787	1			GROMMET
12					BOLT
					2.5L Four Cylinder
	3420 1803	1			80mm Long
	3420 1952	1			110mm Long
	3420 2030	1			2.8L Six Cylinder
13					BOLT
	1150 4922	3			50mm Long
	3420 1836	3			75mm Long
14					BOLT
	3420 1465	2			80mm Long
	3420 1837	2			90mm Long
15	5300 1164	1			HOUSING, Clutch
16	5300 1336	1			COVER, Housing
17	5300 1162	1			SLEEVE, Includes Bearing
18	3420 2042	6			BOLT
19	3420 2027	4			BOLT
20	3420 2317	9			BOLT

MODEL CODES

16=Cherokee 2 Dr.(1981-83)
17=Cherokee 2 Dr.(1981-83)
73=Cherokee 2WD-2 Dr.(1984-86)
74=Cherokee 2WD-4 Dr.(1984-86)
18=Cherokee 4 Dr.(1981-83)
77=Cherokee 4WD-2 Dr.(1984-86)
78=Cherokee 4WD-4 Dr.(1984-86)
85=CJ-5 (1981-83)
86=CJ-6(1981)
87=CJ-7(1981-86)
88=CJ-8, Scrambler(1981-86)
64=Comanche 2WD-6 Ft. Box(1986)
66=Comanche 2WD-7 Ft. Box(1986)
63=Comanche 4WD-6 Ft. Box(1986)
65=Comanche 4WD-7 Ft. Box(1986)
15=Grand Wagoneer 4 Dr.(1984-86)
25=J-10 Truck 7 Ft. Box(1981-84)
26=J10 Truck 8 Ft. Box(1981-86)
27=J-20 Truck 8 Ft. Box(1981-86)
15=Wagoneer 4 Dr.(1981-83)
75=Wagoneer 4WD-4 Dr.(1984-86)

BODY
CJ=CJ-5, CJ-6, CJ-7, CJ-8, Scrambler(1981-86)
MJ=Comanche Pickup(1986)

STYLES
SJ=Wagoneer(1981-83), Grand Wagoneer(1984-86), Cherokee(1981-83), J-10, J-20(1981-86)
XJ=Wagoneer(1984-86), Cherokee(1984-86)

AR = Use as Required - = Non Illustrated Part P.A.R. = Paint as Required

« RETURN TO GROUP INDEX

BELLHOUSING AND COVER SJ CHEROKEE, SJ WAGONEER, J10, J20
Figure 6-600

81J06 600 A

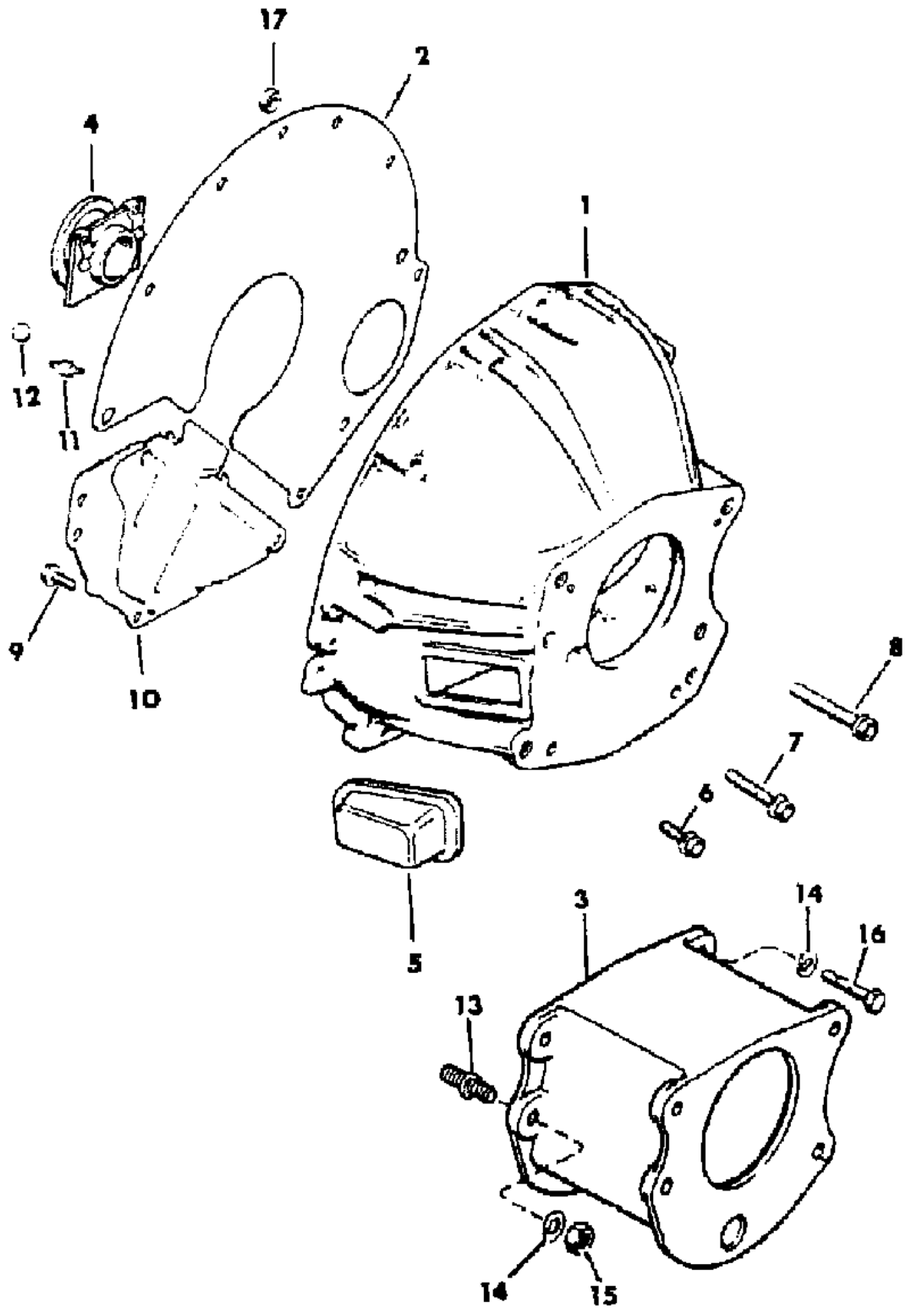

ITEM	PART NUMBER	QTY	BODY	MODEL	DESCRIPTION
1					HOUSING, Clutch
					4.2L Six Cylinder
	J323 8423	1			With Four Speed Transmission
	J324 1407	1			With Five Speed Transmission
	J323 8570	1		27	EXPORT
					5.9L Eight Cylinder
	J323 5827	1		15,16,1	
	J323 5827	1		25,26	
	J323 5826	1		27	
2	J321 3743	1			SPACER
3					ADAPTER
					With Four Speed Transmission
	J535 9693	1		27	4.2L Six Cylinder
					5.9L Eight Cylinder
	J535 9656	1		15,16,1	
	J535 9656	1		25,26	
	J535 9714	1		27	
4					SLEEVE, Includes Bearing
	J536 1610	1			
	J536 1632	1			EXPORT, Right Hand Drive
5					BOOT
	J323 8430	1			4.2L Six Cylinder
	J323 6454	1			5.9L Eight Cylinder
6					BOLT
	J400 1883	1		15,16,1	
	J400 1883	1		25,26	
	J400 6718	1		27	4.2L Six Cylinder
	J535 6352	1		27	5.9L Eight Cylinder
7	J400 1885	4			BOLT
8	J400 4370	2			BOLT
9	J400 0987	AR			BOLT
10	J321 3744	1			COVER
11	J322 2799	1			SPRING
12	J016 9162	1			BALL
13	J400 6682	4			STUD
14	J012 0383	4			WASHER
15	J027 1501	4			NUT
16	J535 6352	1			BOLT
17	J012 0377	AR			NUT

MODEL CODES

16=Cherokee 2 Dr.(1981-83)	78=Cherokee 4WD-4 Dr.(1984-86)	64=Comanche 2WD-6 Ft. Box(1986)	25=J-10 Truck 7 Ft. Box(1981-84)
17=Cherokee 2 Dr.(1981-83)	85=CJ-5 (1981-83)	66=Comanche 2WD-7 Ft. Box(1986)	26=J10 Truck 8 Ft. Box(1981-86)
73=Cherokee 2WD-2 Dr.(1984-86)	86=CJ-6(1981)	63=Comanche 4WD-6 Ft. Box(1986)	27=J-20 Truck 8 Ft. Box(1981-86)
74=Cherokee 2WD-4 Dr.(1984-86)	87=CJ-7(1981-86)	65=Comanche 4WD-7 Ft. Box(1986)	15=Wagoneer 4 Dr.(1981-83)
18=Cherokee 4 Dr.(1981-83)	88=CJ-8, Scrambler(1981-86)	15=Grand Wagoneer 4 Dr.(1984-86)	75=Wagoneer 4WD-4 Dr.(1984-86)
77=Cherokee 4WD-2 Dr.(1984-86)			

BODY
CJ=CJ-5, CJ-6, CJ-7, CJ-8, Scrambler(1981-86)
MJ=Comanche Pickup(1986)

STYLES
SJ=Wagoneer(1981-83), Grand Wagoneer(1984-86), Cherokee(1981-83), J-10, J-20(1981-86)
XJ=Wagoneer(1984-86), Cherokee(1984-86)

AR = Use as Required - = Non Illustrated Part P.A.R. = Paint as Required

« RETURN TO GROUP INDEX

PEDAL, CLUTCH LINKAGE 2.5L AMC FOUR CYLINDER CJ-5,6,7,8, SCRAMBLER
Figure 6-700

81J06 700A

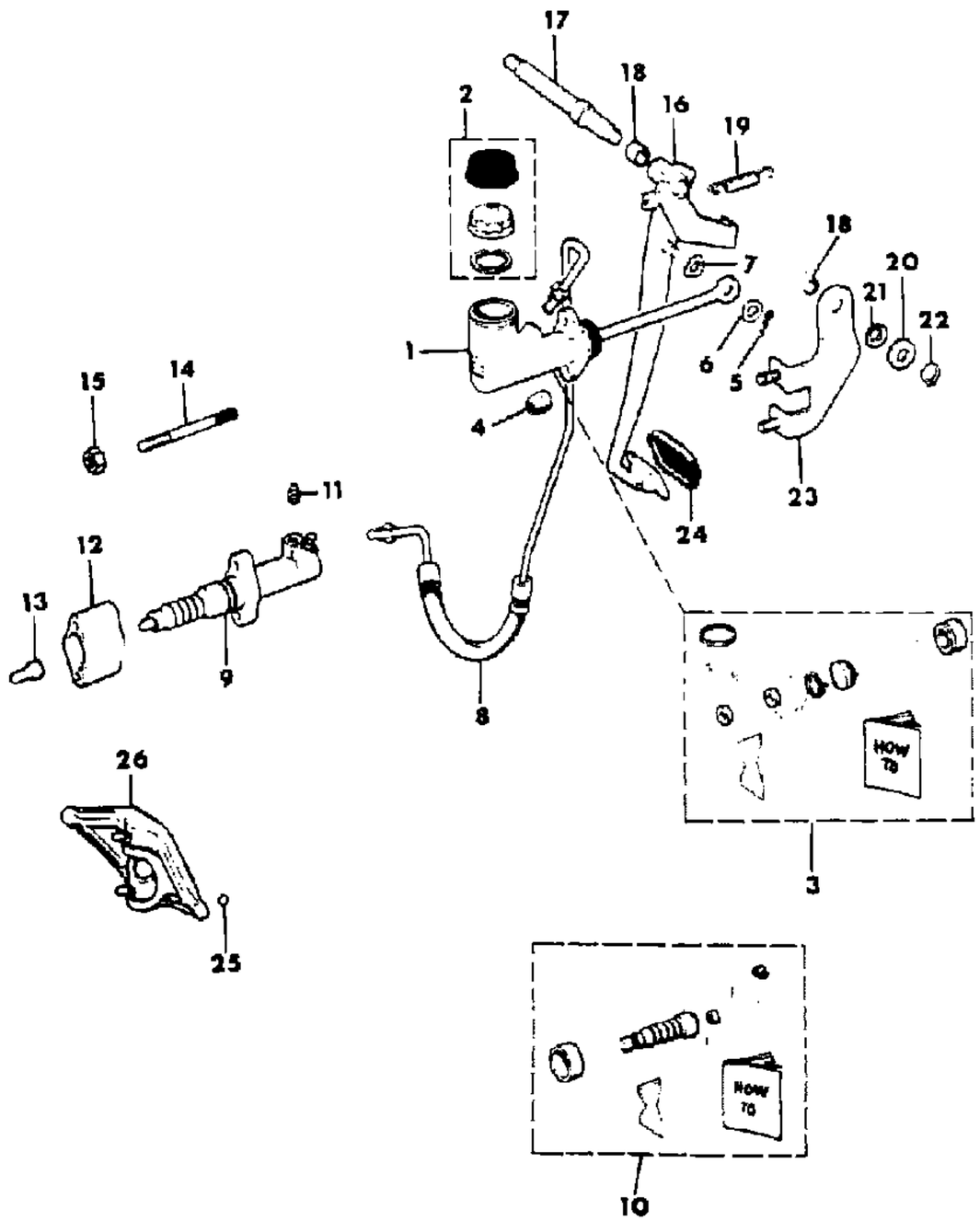

ITEM	PART NUMBER	QTY	BODY	MODEL	DESCRIPTION
1	J535 9822	1			CYLINDER ASSEMBLY, Clutch Master
2	J813 3630	1			CAP PACKAGE ***
3	J813 2781	1			REPAIR PACKAGE, Master Cylinder
4	J400 1457	2			NUT
5	J012 1224	1			PIN, Cotter
6	J012 0396	1			WASHER, Flat
7	J400 4616	1			WASHER, Wave
8					TUBE ASSEMBLY ***
	J536 4646	1			
	J536 4835	1			EXPORT
9	5200 0070	1			CYLINDER ASSEMBLY, Clutch Slave
10	8350 0670	1			REPAIR PACKAGE, Slave Cylinder
11	J813 3629	1			SCREW, Bleed
12	5300 0252	1			SPACER
13	J321 7479	1			PIVOT
14	3420 1654	2			STUD
15	1150 2729	2			NUT
16	J535 9833	1			PEDAL, Clutch
17	J535 9834	1			SHAFT
18	J094 6177	2			BEARING
19	J535 1050	1			SPRING
20	J400 1147	1			WASHER, Flat
21	J535 1844	1			WASHER, Spring
22	J400 6471	1			RING, Snap
23	J535 9817	1			BRACE
24	J536 3508	1			PAD, Clutch Pedal
25	J016 9162	1			BALL
26	5300 0484	1			LEVER, Clutch Throwout

MODEL CODES

16=Cherokee 2 Dr.(1981-83)
17=Cherokee 2 Dr.(1981-83)
73=Cherokee 2WD-2 Dr.(1984-86)
74=Cherokee 2WD-4 Dr.(1984-86)
18=Cherokee 4 Dr.(1981-83)
77=Cherokee 4WD-2 Dr.(1984-86)
78=Cherokee 4WD-4 Dr.(1984-86)
85=CJ-5 (1981-83)
86=CJ-6(1981)
87=CJ-7(1981-86)
88=CJ-8, Scrambler(1981-86)
64=Comanche 2WD-6 Ft. Box(1986)
66=Comanche 2WD-7 Ft. Box(1986)
63=Comanche 4WD-6 Ft. Box(1986)
65=Comanche 4WD-7 Ft. Box(1986)
15=Grand Wagoneer 4 Dr.(1984-86)
25=J-10 Truck 7 Ft. Box(1981-84)
26=J10 Truck 8 Ft. Box(1981-86)
27=J-20 Truck 8 Ft. Box(1981-86)
15=Wagoneer 4 Dr.(1981-83)
75=Wagoneer 4WD-4 Dr.(1984-86)

BODY
CJ=CJ-5, CJ-6, CJ-7, CJ-8, Scrambler(1981-86)
MJ=Comanche Pickup(1986)

STYLES
SJ=Wagoneer(1981-83), Grand Wagoneer(1984-86), Cherokee(1981-83), J-10, J-20(1981-86)
XJ=Wagoneer(1984-86), Cherokee(1984-86)

AR = Use as Required - = Non Illustrated Part P.A.R. = Paint as Required

« RETURN TO GROUP INDEX

PEDAL, CLUTCH LINKAGE, CJ 2.5L GM FOUR CYLINDER, DIESEL OR RIGHT HAND DRIVE 4.2L SIX CYLINDER
Figure 6-800

81J06 800

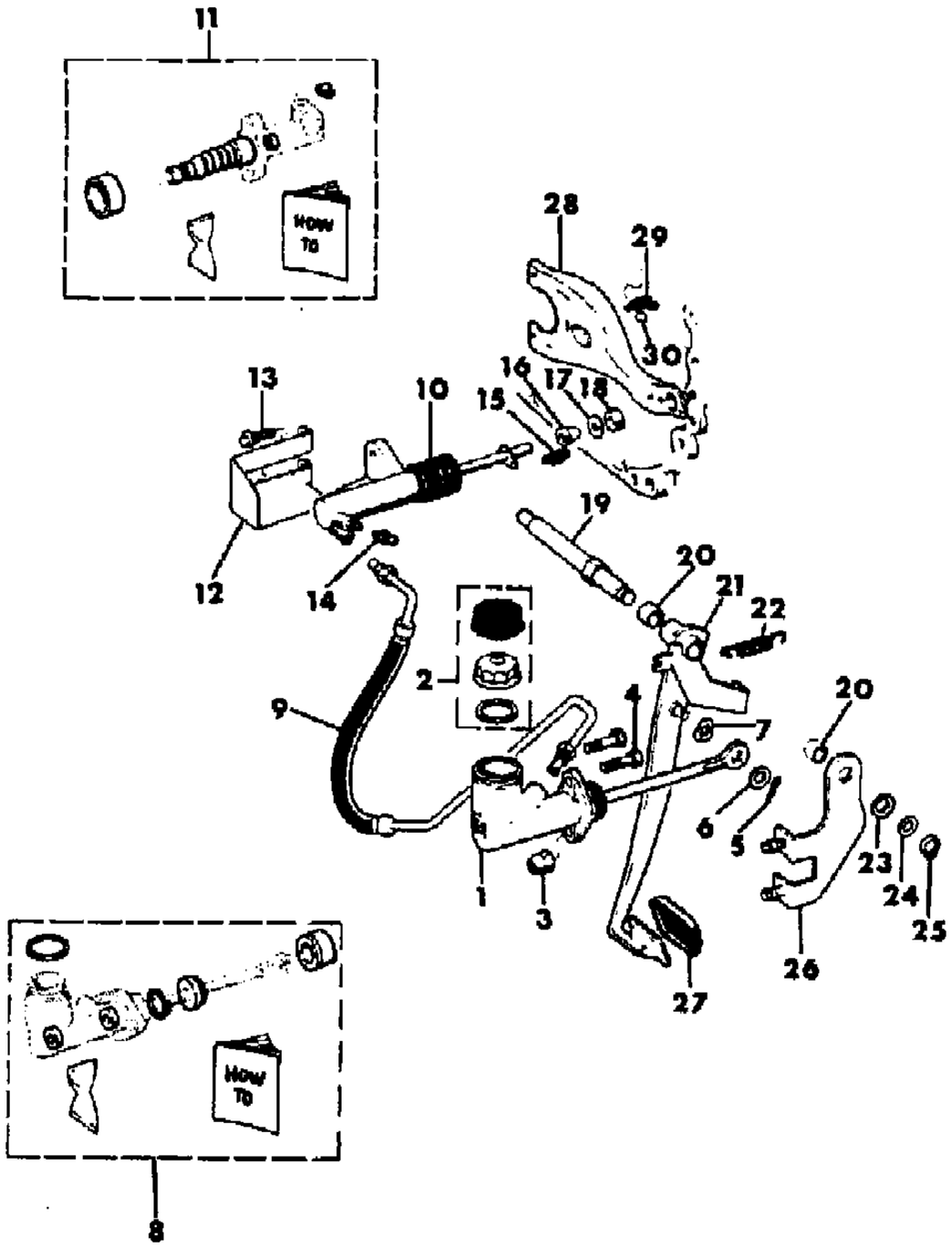

ITEM	PART NUMBER	QTY	BODY	MODEL	DESCRIPTION
1					CYLINDER ASSEMBLY, Clutch Master
	J535 9822	1			2.5L GM Four Cylinder
					4.2L Six Cylinder, EXPORT
	J535 9822	1			1981
	J536 1382	1			1982-86
	J536 1382	1			Diesel
2	J813 3630	1			CAP PACKAGE ***
3	J400 1457	2			NUT
4					BOLT
	J018 0079	2			EXPORT
5	J012 1224	1			PIN, Cotter
6	J012 0396	1			WASHER, Flat
7	J400 4616	1			WASHER, Wave
8					REPAIR PACKAGE, Master Cylinder
	J813 2781	1			2.5L GM Four Cylinder
	J813 2781	1			4.2L Six Cylinder, EXPORT
	8350 0676	1			Diesel
9					TUBE ASSEMBLY ***
					2.5L GM Four Cylinder
	J536 1469	1			
	J536 2493	1			EXPORT
	J536 1221	1			4.2L Six Cylinder, EXPORT
	J536 1470	1			Diesel
10					CYLINDER ASSEMBLY, Clutch Slave
					2.5L GM Four Cylinder
	J323 6779	1			1981
	J324 1867	1			1982-83
11					CYLINDER ASSEMBLY, Clutch Slave
					4.2L Six Cylinder, EXPORT
	J536 1648	1			1981
	J324 1869	1			1982-86
	J323 6779	1			Diesel
12	J323 6846	1			SHIELD, Slave Cylinder
13					BOLT
	J420 0402	2			2.5L GM Four Cylinder
	J999 7936	2			4.2L Six Cylinder, EXPORT
	J420 0402	2			Diesel
14	J813 3629	1			SCREW, Bleed
15	J323 6804	1			SPRING

MODEL CODES

16=Cherokee 2 Dr.(1981-83)	78=Cherokee 4WD-4 Dr.(1984-86)	64=Comanche 2WD-6 Ft. Box(1986)	25=J-10 Truck 7 Ft. Box(1981-84)
17=Cherokee 2 Dr.(1981-83)	85=CJ-5 (1981-83)	66=Comanche 2WD-7 Ft. Box(1986)	26=J10 Truck 8 Ft. Box(1981-86)
73=Cherokee 2WD-2 Dr.(1984-86)	86=CJ-6(1981)	63=Comanche 4WD-6 Ft. Box(1986)	27=J-20 Truck 8 Ft. Box(1981-86)
74=Cherokee 2WD-4 Dr.(1984-86)	87=CJ-7(1981-86)	65=Comanche 4WD-7 Ft. Box(1986)	15=Wagoneer 4 Dr.(1981-83)
18=Cherokee 4 Dr.(1981-83)	88=CJ-8, Scrambler(1981-86)	15=Grand Wagoneer 4 Dr.(1984-86)	75=Wagoneer 4WD-4 Dr.(1984-86)
77=Cherokee 4WD-2 Dr.(1984-86)			

BODY
CJ=CJ-5, CJ-6, CJ-7, CJ-8, Scrambler(1981-86)
MJ=Comanche Pickup(1986)

STYLES
SJ=Wagoneer(1981-83), Grand Wagoneer(1984-86), Cherokee(1981-83), J-10, J-20(1981-86)
XJ=Wagoneer(1984-86), Cherokee(1984-86)

AR = Use as Required - = Non Illustrated Part P.A.R. = Paint as Required

« RETURN TO GROUP INDEX »

PEDAL, CLUTCH LINKAGE, CJ 2.5L GM FOUR CYLINDER, DIESEL OR RIGHT HAND DRIVE 4.2L SIX CYLINDER
Figure 6-800

81J06 800

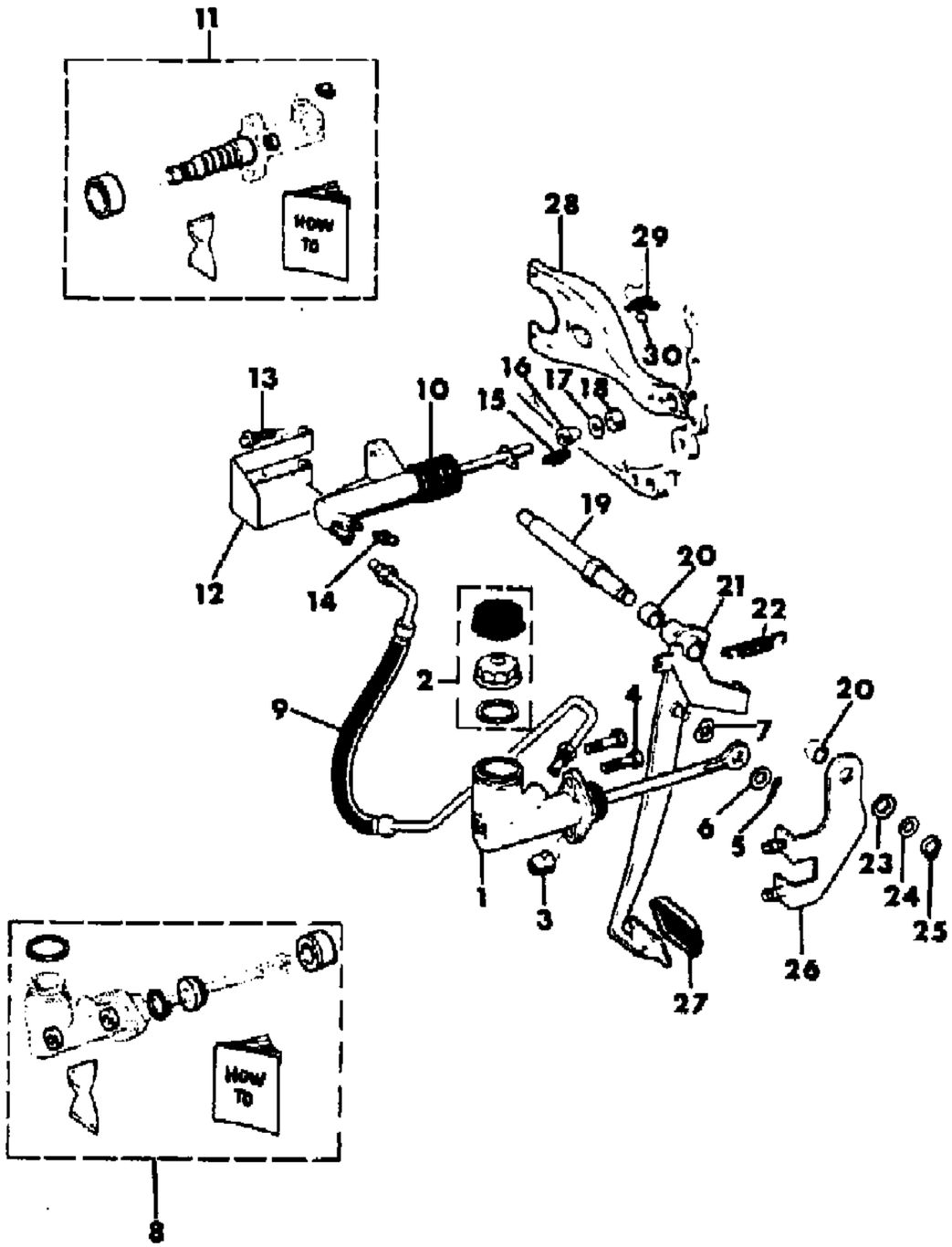

ITEM	PART NUMBER	QTY	BODY	MODEL	DESCRIPTION
16	J321 7479	1			PIVOT
17	J400 1116	1			WASHER
18	J313 0998	1			SEAL
19	J535 9834	1			SHAFT
20					BEARING
					1981
	J094 6177	2			2.5L GM Four Cylinder
	J094 9169	2			4.2L Six Cylinder, EXPORT
	J094 9169	2			Diesel
	J094 6177	2			1982-86
21					PEDAL, Clutch
	J535 9833	1			2.5L GM Four Cylinder
					4.2L Six Cylinder, EXPORT
	J536 1844	1			1981
	J536 3438	1			1982-86
					Diesel
	J536 1847	1			1981
	J535 9833	1			1982-86
22	J535 1050	1			SPRING
23	J535 1844	1			WASHER, Spring
24	J400 1147	1			WASHER, Flat
25	J400 6471	1			RING, Snap
26	J535 9817	1			BRACE
27					PAD, Clutch Pedal
	J094 8758	1			1981
	J536 3508	1			1982-86
28	J536 1620	1			LEVER, Clutch Throwout
29					SPRING
	J322 2799	1			2.5L GM Four Cylinder
	J319 9503	1			4.2L Six Cylinder, EXPORT
	J319 9503	1			Diesel
30	J016 9162	1			BALL

MODEL CODES

16=Cherokee 2 Dr.(1981-83)
17=Cherokee 2 Dr.(1981-83)
73=Cherokee 2WD-2 Dr.(1984-86)
74=Cherokee 2WD-4 Dr.(1984-86)
18=Cherokee 4 Dr.(1981-83)
77=Cherokee 4WD-2 Dr.(1984-86)
78=Cherokee 4WD-4 Dr.(1984-86)
85=CJ-5 (1981-83)
86=CJ-6(1981)
87=CJ-7(1981-86)
88=CJ-8, Scrambler(1981-86)
64=Comanche 2WD-6 Ft. Box(1986)
66=Comanche 2WD-7 Ft. Box(1986)
63=Comanche 4WD-6 Ft. Box(1986)
65=Comanche 4WD-7 Ft. Box(1986)
15=Grand Wagoneer 4 Dr.(1984-86)
25=J-10 Truck 7 Ft. Box(1981-84)
26=J10 Truck 8 Ft. Box(1981-86)
27=J-20 Truck 8 Ft. Box(1981-86)
15=Wagoneer 4 Dr.(1981-83)
75=Wagoneer 4WD-4 Dr.(1984-86)

BODY
CJ=CJ-5, CJ-6, CJ-7, CJ-8, Scrambler(1981-86)
MJ=Comanche Pickup(1986)

STYLES
SJ=Wagoneer(1981-83), Grand Wagoneer(1984-86), Cherokee(1981-83), J-10, J-20(1981-86)
XJ=Wagoneer(1984-86), Cherokee(1984-86)

AR = Use as Required - = Non Illustrated Part P.A.R. = Paint as Required

« RETURN TO GROUP INDEX

PEDAL, CLUTCH LINKAGE, CJ 4.2L SIX CYLINDER LEFT HAND DRIVE 5.0L EIGHT CYLINDER
Figure 6-900

81J06 900 A

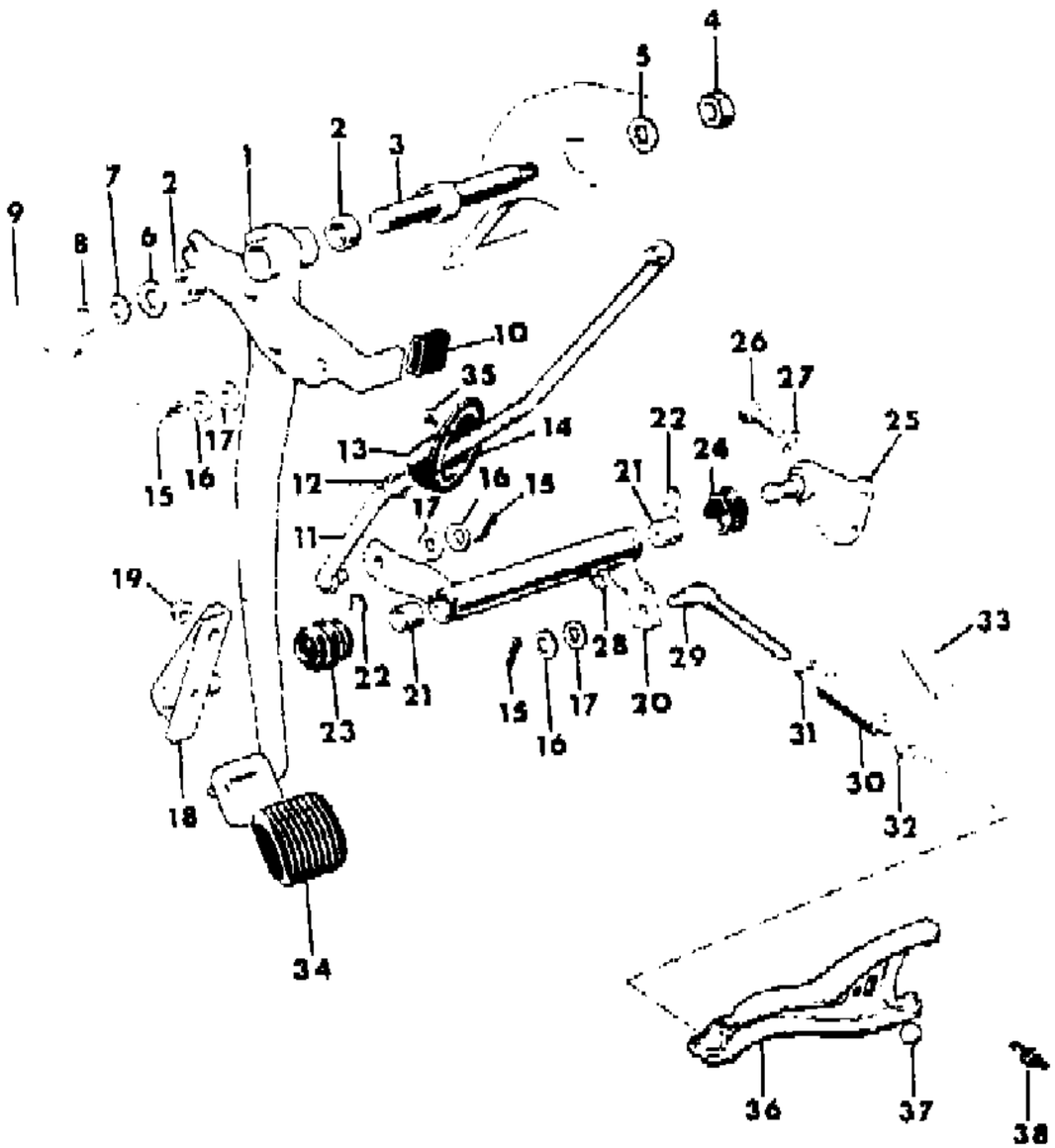

ITEM	PART NUMBER	QTY	BODY	MODEL	DESCRIPTION
1					PEDAL, Clutch
	J536 0195	1			1981
					1982-86
	J536 4039	1			With Cruise Control
	J536 3465	1			Without Cruise Control
2					BEARING
	J094 9169	2			1981
	J094 6177	2			1982-86
3	J535 9834	1			SHAFT
4	J400 4311	1			NUT
5	J012 0396	2			WASHER
6	J400 1147	1			WASHER, Flat
7	J535 1844	1			WASHER, Wave
8	J400 6471	1			RING, Snap
9					SPRING
	J535 7515	1			1981
	J536 3464	1			1982-86
10	J535 5312	1			STOP
11					ROD, Clutch Bellcrank
	J535 3251	1			1981
	J536 4620	1			1982-86
12	J317 3461	1			BUSHING
13	J535 7674	1			BOOT
14	J535 5322	1			RETAINER, Boot
15	J400 0407	3			PIN
16	J400 4437	1			WASHER, Flat
17	J321 5893	1			WASHER, Wave
18	J535 5339	1			BRACKET
19	J400 3954	2			NUT
20					BELLCRANK
	J536 0104	1			1981
	J536 3462	1			1982
	J536 4621	1			1983-86
21	J316 7067	2			BUSHING
22	J316 9769	2			RETAINER
23	J317 0937	1			BOOT
24	J316 7049	1			BOOT
25	J536 0112	1			SUPPORT
26	S018 6677	2			BOLT

MODEL CODES
16=Cherokee 2 Dr.(1981-83)
17=Cherokee 2 Dr.(1981-83)
73=Cherokee 2WD-2 Dr.(1984-86)
74=Cherokee 2WD-4 Dr.(1984-86)
18=Cherokee 4 Dr.(1981-83)
77=Cherokee 4WD-2 Dr.(1984-86)
78=Cherokee 4WD-4 Dr.(1984-86)
85=CJ-5 (1981-83)
86=CJ-6(1981)
87=CJ-7(1981-86)
88=CJ-8, Scrambler(1981-86)
64=Comanche 2WD-6 Ft. Box(1986)
66=Comanche 2WD-7 Ft. Box(1986)
63=Comanche 4WD-6 Ft. Box(1986)
65=Comanche 4WD-7 Ft. Box(1986)
15=Grand Wagoneer 4 Dr.(1984-86)
25=J-10 Truck 7 Ft. Box(1981-84)
26=J10 Truck 8 Ft. Box(1981-86)
27=J-20 Truck 8 Ft. Box(1981-86)
15=Wagoneer 4 Dr.(1981-83)
75=Wagoneer 4WD-4 Dr.(1984-86)

BODY
CJ=CJ-5, CJ-6, CJ-7, CJ-8, Scrambler(1981-86)
MJ=Comanche Pickup(1986)

STYLES
SJ=Wagoneer(1981-83), Grand Wagoneer(1984-86), Cherokee(1981-83), J-10, J-20(1981-86)
XJ=Wagoneer(1984-86), Cherokee(1984-86)

AR = Use as Required - = Non Illustrated Part P.A.R. = Paint as Required

PEDAL, CLUTCH LINKAGE, CJ 4.2L SIX CYLINDER LEFT HAND DRIVE 5.0L EIGHT CYLINDER
Figure 6-900

81J06 900 A

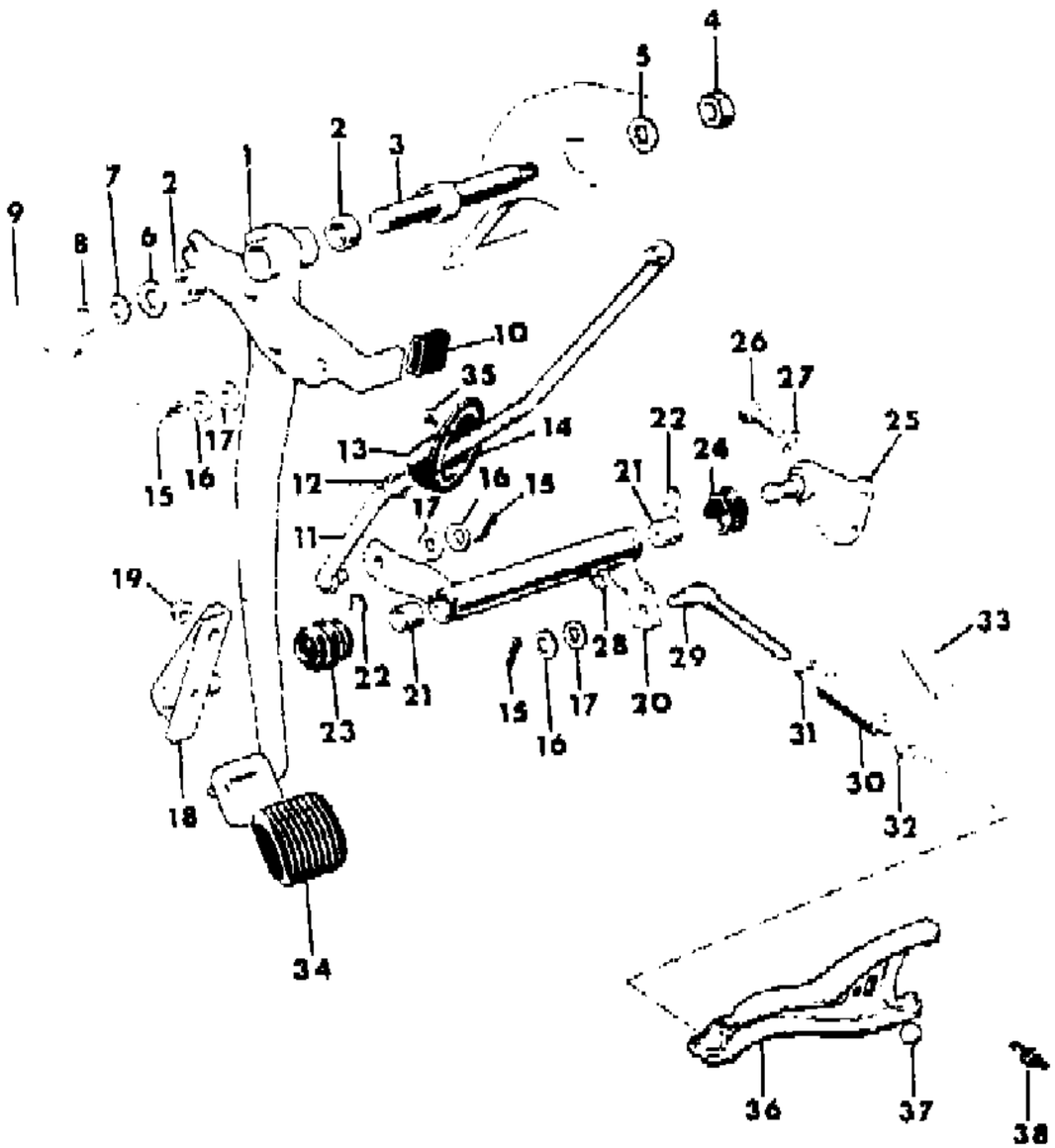

ITEM	PART NUMBER	QTY	BODY	MODEL	DESCRIPTION
27	J012 0214	2			WASHER
28	J099 8414	1			FITTING, Lube
29	J535 9943	1			ROD, Clutch Fork
30	J535 9735	1			ADJUSTER
31	J012 4925	1			NUT
32	J313 0998	1			SEAL
33	J535 1252	1			SPRING
34					PAD, Clutch Pedal
	J094 8758	1			1981
	J536 3508	1			1982-86
35	S016 3210	3			SCREW
36	J536 1620	1			LEVER, Clutch Throwout
37	J016 9162	1			BALL
38	J322 2799	1			SPRING

MODEL CODES

16=Cherokee 2 Dr.(1981-83)
17=Cherokee 2 Dr.(1981-83)
73=Cherokee 2WD-2 Dr.(1984-86)
74=Cherokee 2WD-4 Dr.(1984-86)
18=Cherokee 4 Dr.(1981-83)
77=Cherokee 4WD-2 Dr.(1984-86)
78=Cherokee 4WD-4 Dr.(1984-86)
85=CJ-5 (1981-83)
86=CJ-6(1981)
87=CJ-7(1981-86)
88=CJ-8, Scrambler(1981-86)
64=Comanche 2WD-6 Ft. Box(1986)
66=Comanche 2WD-7 Ft. Box(1986)
63=Comanche 4WD-6 Ft. Box(1986)
65=Comanche 4WD-7 Ft. Box(1986)
15=Grand Wagoneer 4 Dr.(1984-86)
25=J-10 Truck 7 Ft. Box(1981-84)
26=J10 Truck 8 Ft. Box(1981-86)
27=J-20 Truck 8 Ft. Box(1981-86)
15=Wagoneer 4 Dr.(1981-83)
75=Wagoneer 4WD-4 Dr.(1984-86)

BODY
CJ=CJ-5, CJ-6, CJ-7, CJ-8, Scrambler(1981-86)
MJ=Comanche Pickup(1986)

STYLES
SJ=Wagoneer(1981-83), Grand Wagoneer(1984-86), Cherokee(1981-83), J-10, J-20(1981-86)
XJ=Wagoneer(1984-86), Cherokee(1984-86)

AR = Use as Required - = Non Illustrated Part P.A.R. = Paint as Required

« RETURN TO GROUP INDEX

PEDAL, CLUTCH LINKAGE XJ CHEROKEE, XJ WAGONEER, COMANCHE
Figure 6-1000

81J06 1000

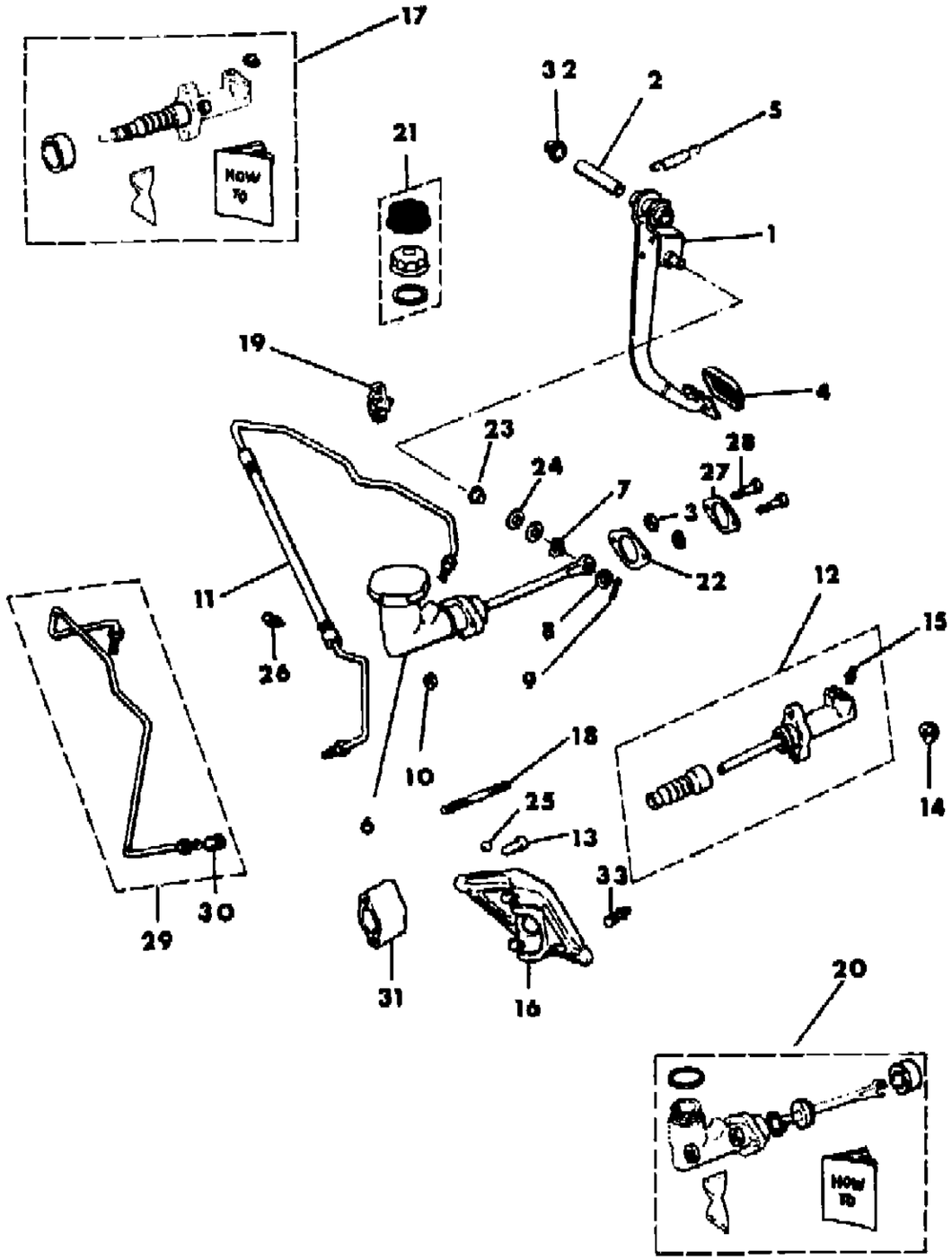

ITEM	PART NUMBER	QTY	BODY	MODEL	DESCRIPTION
1					PEDAL, Clutch
	5200 0080	1			1984
	5300 2146	1			1985
					1986
	5300 4363	1			
	5300 3531	1			EXPORT
2	5300 0636	1			SLEEVE
3	1150 2812	2			NUT
4	J322 9581	1			PAD, Clutch Pedal
5	5200 0402	1			SPRING
6					CYLINDER ASSEMBLY, Clutch Master
	5200 0068	1			1984
					1985
	5200 0068	1			2.5L Four Cylinder
	5300 1163	1			2.8L Six Cylinder
	5300 1163	1			Diesel
	5300 1163	1			1986
7	J400 4616	1			WASHER, Wave
8	J012 0396	1			WASHER, Flat
9	J012 1224	1			PIN
10	J941 3534	2			NUT
11					TUBE ASSEMBLY ***
					2.5L Four Cylinder
	5200 0069	1			1984-85
	5300 4247	1			1986
					2.8L Six Cylinder
	5200 0069	1			1984-85
	5300 4247	1			1986
					Diesel
	5300 1323	1			1984-85
	5300 4161	1			1986
12					CYLINDER ASSEMBLY, Clutch Slave
	5200 0070	1			2.5L Four Cylinder
	5200 0070	1			2.8L Six Cylinder
	5300 1324	1			Diesel
13	J321 7479	1			PIVOT
14	1150 2729	2			NUT
15	J813 3629	1			SCREW, Bleed
16	5300 0484	1			LEVER, Clutch Throwout

MODEL CODES
16=Cherokee 2 Dr.(1981-83)
17=Cherokee 2 Dr.(1981-83)
73=Cherokee 2WD-2 Dr.(1984-86)
74=Cherokee 2WD-4 Dr.(1984-86)
18=Cherokee 4 Dr.(1981-83)
77=Cherokee 4WD-2 Dr.(1984-86)
78=Cherokee 4WD-4 Dr.(1984-86)
85=CJ-5 (1981-83)
86=CJ-6(1981)
87=CJ-7(1981-86)
88=CJ-8, Scrambler(1981-86)
64=Comanche 2WD-6 Ft. Box(1986)
66=Comanche 2WD-7 Ft. Box(1986)
63=Comanche 4WD-6 Ft. Box(1986)
65=Comanche 4WD-7 Ft. Box(1986)
15=Grand Wagoneer 4 Dr.(1984-86)
25=J-10 Truck 7 Ft. Box(1981-84)
26=J10 Truck 8 Ft. Box(1981-86)
27=J-20 Truck 8 Ft. Box(1981-86)
15=Wagoneer 4 Dr.(1981-83)
75=Wagoneer 4WD-4 Dr.(1984-86)

BODY
CJ=CJ-5, CJ-6, CJ-7, CJ-8, Scrambler(1981-86)
MJ=Comanche Pickup(1986)

STYLES
SJ=Wagoneer(1981-83), Grand Wagoneer(1984-86), Cherokee(1981-83), J-10, J-20(1981-86)
XJ=Wagoneer(1984-86), Cherokee(1984-86)

AR = Use as Required - = Non Illustrated Part P.A.R. = Paint as Required

« RETURN TO GROUP INDEX »

PEDAL, CLUTCH LINKAGE XJ CHEROKEE, XJ WAGONEER, COMANCHE
Figure 6-1000

81J06 1000

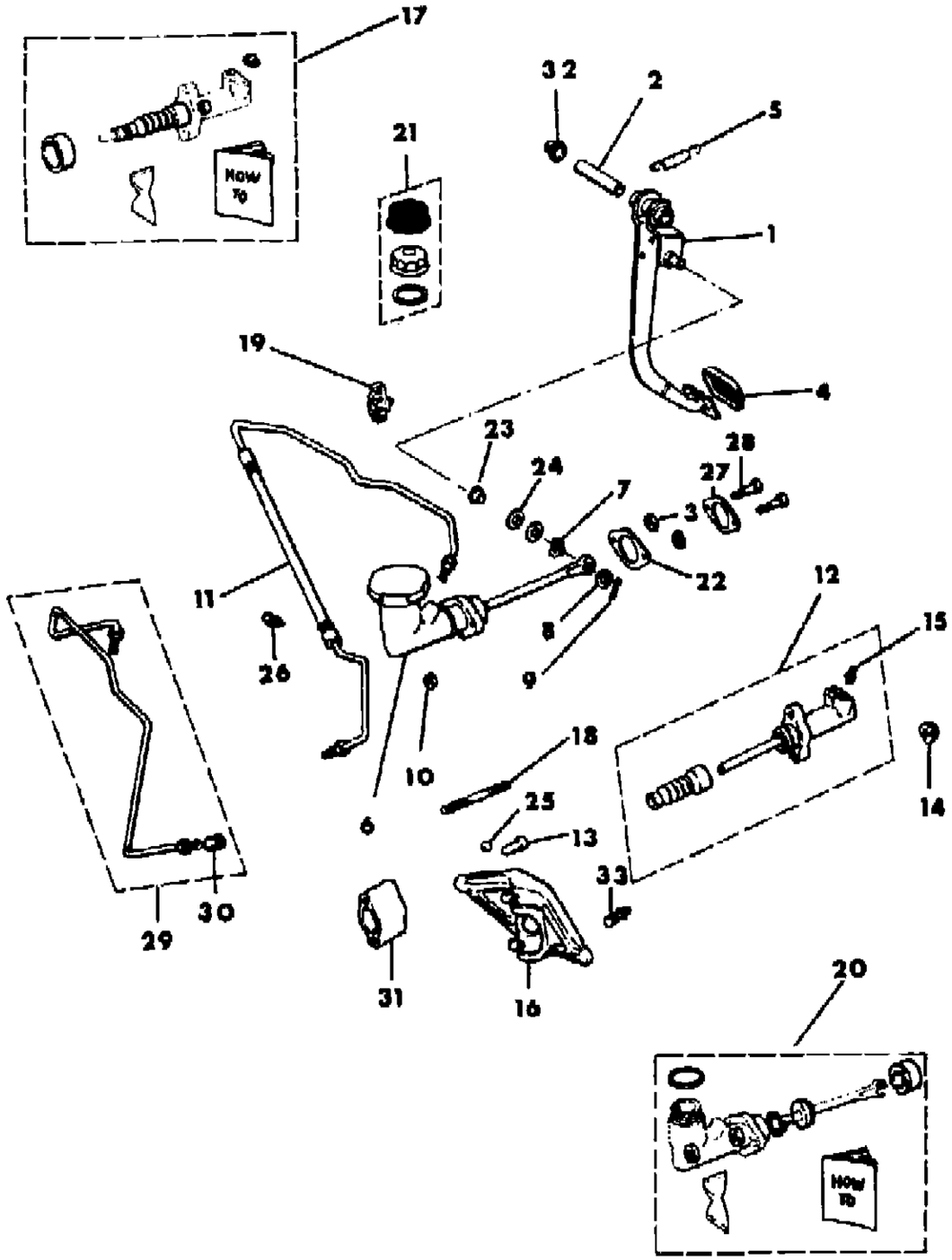

ITEM	PART NUMBER	QTY	BODY	MODEL	DESCRIPTION
17	8350 0670	1			REPAIR PACKAGE, Slave Cylinder
18					STUD
	3420 1654	2			2.5L Four Cylinder
	3420 1654	2			2.8L Six Cylinder
	3420 2043	2			Diesel
19	5300 0585	1			CLIP
20					REPAIR PACKAGE, Master Cylinder
					2.5L Four Cylinder
	8350 0669	1			1984-85
	8350 1531	1			1986
					2.8L Six Cylinder
	8350 0669	1			1984
	8350 1531	1			1985-86
	8350 1531	1			Diesel
21	J813 3630	1			CAP PACKAGE ***
22	5300 1860	1			SEAL
23	J400 7472	1			BUSHING
24	J400 7070	2			WASHER
25	J016 9162	1			BALL
26					CLIP
	J012 6166	1			1984
	3420 1961	1			1985-86
27	J323 7235	1			PLATE
28	3420 1869	2			BOLT
29					TUBE ASSEMBLY ***
	3300 1560	1			1984
	5300 1630	1			1985-86
30	S044 2394	1			UNION
31					SPACER
	5300 0252	1			1984
	5300 1619	1			1985-86
32	J322 5981	2			BUSHING
33	5300 2386	1			PIVOT

MODEL CODES

16=Cherokee 2 Dr.(1981-83)
17=Cherokee 2 Dr.(1981-83)
73=Cherokee 2WD-2 Dr.(1984-86)
74=Cherokee 2WD-4 Dr.(1984-86)
18=Cherokee 4 Dr.(1981-83)
77=Cherokee 4WD-2 Dr.(1984-86)
78=Cherokee 4WD-4 Dr.(1984-86)
85=CJ-5 (1981-83)
86=CJ-6(1981)
87=CJ-7(1981-86)
88=CJ-8, Scrambler(1981-86)
64=Comanche 2WD-6 Ft. Box(1986)
66=Comanche 2WD-7 Ft. Box(1986)
63=Comanche 4WD-6 Ft. Box(1986)
65=Comanche 4WD-7 Ft. Box(1986)
15=Grand Wagoneer 4 Dr.(1984-86)
25=J-10 Truck 7 Ft. Box(1981-84)
26=J10 Truck 8 Ft. Box(1981-86)
27=J-20 Truck 8 Ft. Box(1981-86)
15=Wagoneer 4 Dr.(1981-83)
75=Wagoneer 4WD-4 Dr.(1984-86)

BODY
CJ=CJ-5, CJ-6, CJ-7, CJ-8, Scrambler(1981-86)
MJ=Comanche Pickup(1986)

STYLES
SJ=Wagoneer(1981-83), Grand Wagoneer(1984-86), Cherokee(1981-83), J-10, J-20(1981-86)
XJ=Wagoneer(1984-86), Cherokee(1984-86)

AR = Use as Required - = Non Illustrated Part P.A.R. = Paint as Required

« RETURN TO GROUP INDEX

PEDAL, CLUTCH LINKAGE SJ CHEROKEE, SJ WAGONEER, J10, J20
Figure 6-1100

81J06 1100 A

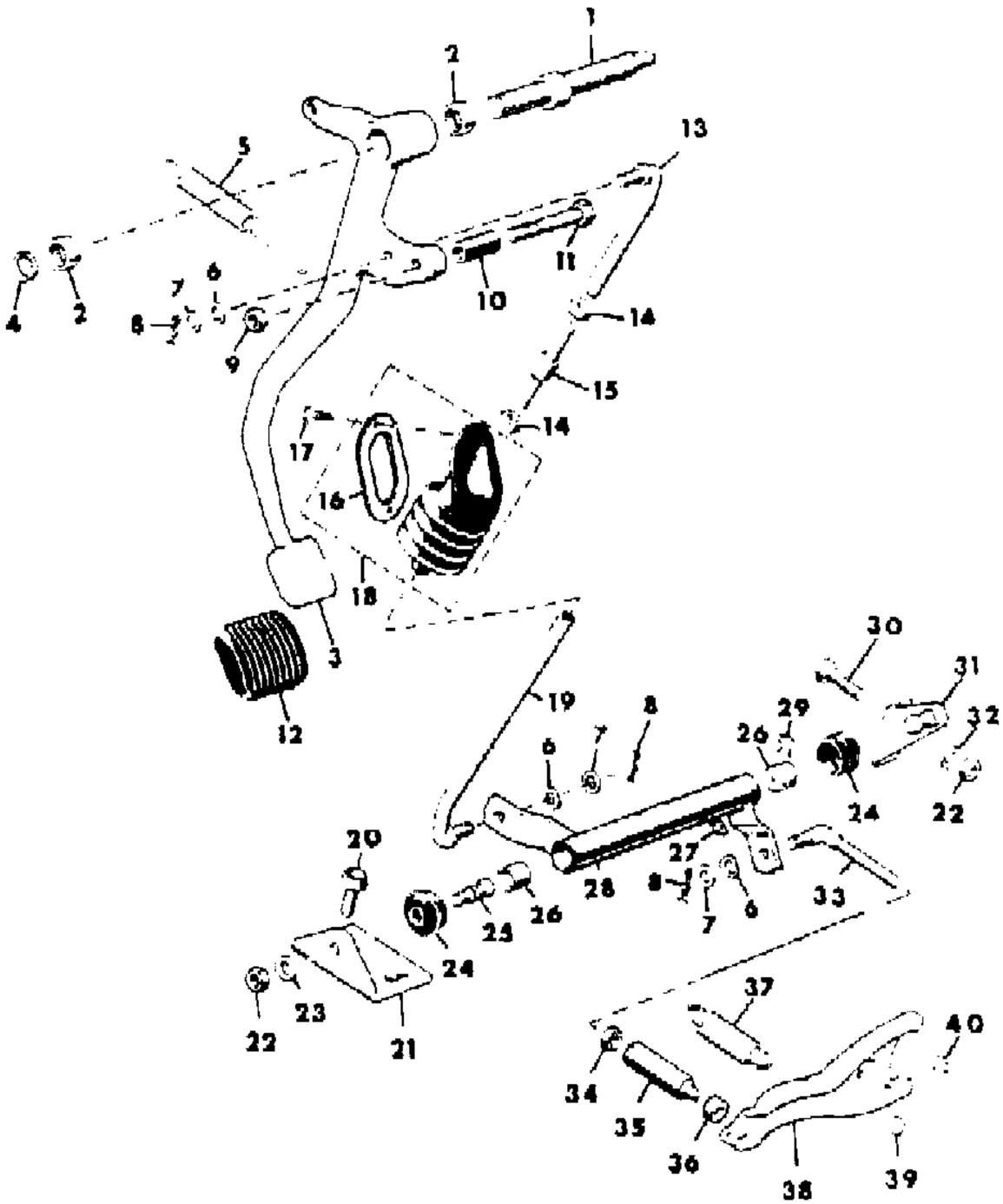

ITEM	PART NUMBER	QTY	BODY	MODEL	DESCRIPTION
1	J535 1805	1			SHAFT
2	J094 9169	2			BEARING
3					PEDAL, Clutch
	J535 9897	1			
	J805 0475	1			EXPORT, Right Hand Drive
4	J091 2640	1			RING, Snap
5					SPRING
	J535 1118	1			
	J535 7515	1			EXPORT, Right Hand Drive
6	J321 5893	2			WASHER, Wave
7	J400 4437	1			WASHER, Flat
8	J400 0407	1			PIN
9	J027 1193	1			NUT
10	J400 4828	1			STOP
11	J400 4826	1			BOLT
12					PAD, Clutch Pedal
	J094 8758	1			1981
	J536 3508	1			1982-86
13	J535 9903	1			ROD, Bellcrank Link
14					NUT
	J012 4824	1			Right Hand Thread
	J400 4966	1			Left Hand Thread
15	J535 5063	1			LINK
16	J535 1134	1			RETAINER, Boot
17	J400 4644	2			SCREW
18	J535 7674	1			BOOT
19					ROD, Bellcrank
					4.2L Six Cylinder
	J535 9934	1	15,16,1		
	J536 1741	1	25,26,2		
					5.9L Eight Cylinder
	J535 9933	1	15,16,1		
	J535 9934	1	25,26,2		
20	J942 4824	2			BOLT
21					BRACKET
	J536 1736	1			4.2L Six Cylinder
	J535 9736	1			5.9L Eight Cylinder
22	J027 1506	1			NUT
23	J012 0383	1			WASHER

MODEL CODES

16=Cherokee 2 Dr.(1981-83)	78=Cherokee 4WD-4 Dr.(1984-86)	64=Comanche 2WD-6 Ft. Box(1986)	25=J-10 Truck 7 Ft. Box(1981-84)
17=Cherokee 2 Dr.(1981-83)	85=CJ-5 (1981-83)	66=Comanche 2WD-7 Ft. Box(1986)	26=J10 Truck 8 Ft. Box(1981-86)
73=Cherokee 2WD-2 Dr.(1984-86)	86=CJ-6(1981)	63=Comanche 4WD-6 Ft. Box(1986)	27=J-20 Truck 8 Ft. Box(1981-86)
74=Cherokee 2WD-4 Dr.(1984-86)	87=CJ-7(1981-86)	65=Comanche 4WD-7 Ft. Box(1986)	15=Wagoneer 4 Dr.(1981-83)
18=Cherokee 4 Dr.(1981-83)	88=CJ-8, Scrambler(1981-86)	15=Grand Wagoneer 4 Dr.(1984-86)	75=Wagoneer 4WD-4 Dr.(1984-86)
77=Cherokee 4WD-2 Dr.(1984-86)			

BODY
CJ=CJ-5, CJ-6, CJ-7, CJ-8, Scrambler(1981-86)
MJ=Comanche Pickup(1986)

STYLES
SJ=Wagoneer(1981-83), Grand Wagoneer(1984-86), Cherokee(1981-83), J-10, J-20(1981-86)
XJ=Wagoneer(1984-86), Cherokee(1984-86)

AR = Use as Required - = Non Illustrated Part P.A.R. = Paint as Required

« RETURN TO GROUP INDEX »

PEDAL, CLUTCH LINKAGE SJ CHEROKEE, SJ WAGONEER, J10, J20
Figure 6-1100

81J06 1100 A

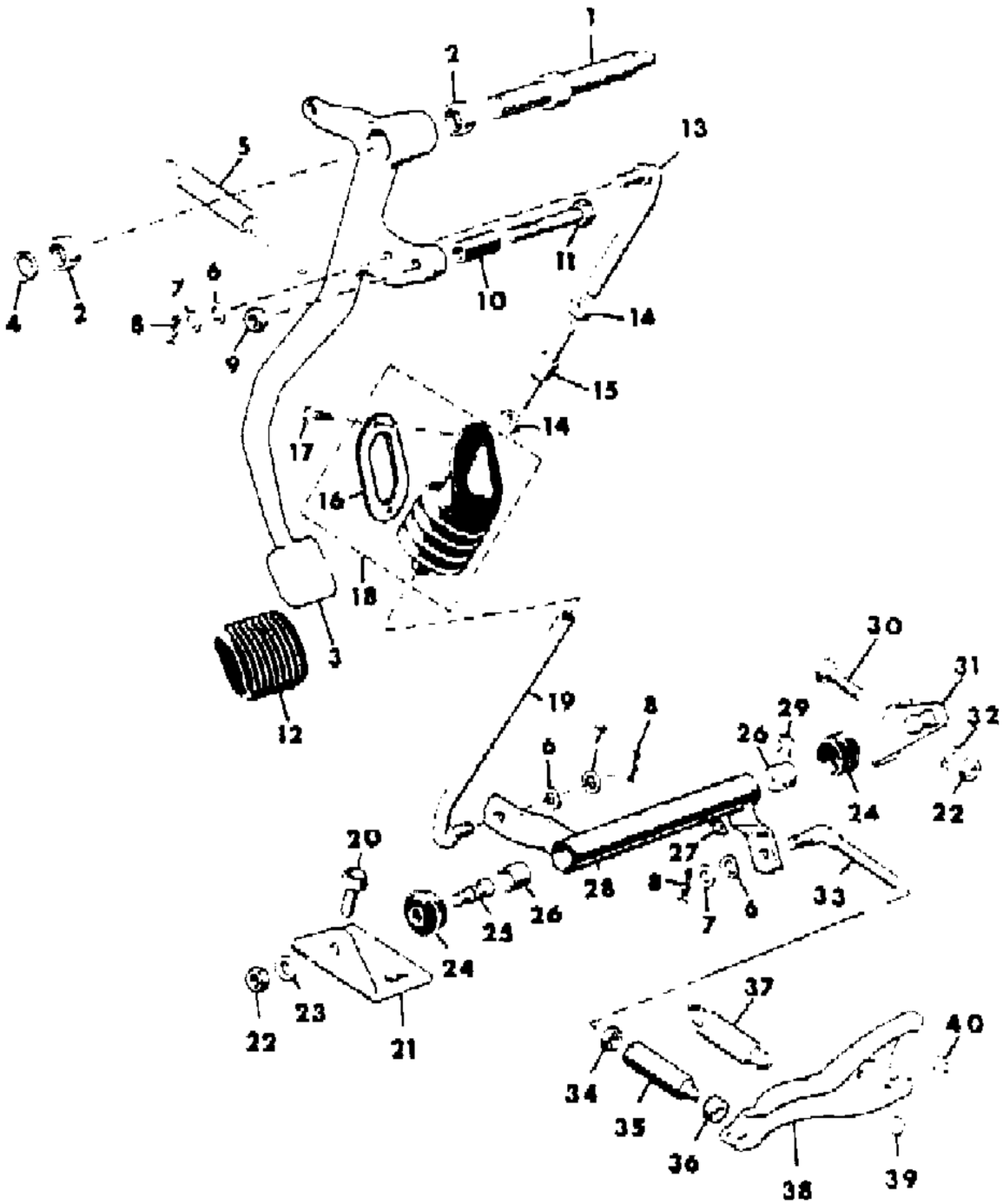

ITEM	PART NUMBER	QTY	BODY	MODEL	DESCRIPTION
24	J316 7049	1			BOOT
25	J094 4666	1			PIVOT
26	J316 7067	1			BUSHING
27	J099 8414	1			FITTING, Lube
28					BELLCRANK
					4.2L Six Cylinder
	J535 9730	1			1981
	J536 3971	1			1982-86
	J535 9730	1			5.9L Eight Cylinder
29	J316 9769	1			RETAINER
30	S018 6677	1			BOLT
31					SUPPORT
	J535 9726	1			4.2L Six Cylinder
	J535 9725	1			5.9L Eight Cylinder
32	J012 0214	1			WASHER, Lock
33					ROD, Clutch Fork
					4.2L Six Cylinder
	J536 1739	1			1981
	J536 3460	1			1982-86
	J536 0098	1			5.9L Eight Cylinder
34	J012 4925	1			NUT
35	J535 9735	1			ADJUSTER
36	J313 0998	1			SEAL
37	J535 1252	1			SPRING
38	J536 1620	1			LEVER, Clutch Throwout
39	J016 9162	1			BALL
40	J322 2799	1			SPRING

MODEL CODES

16=Cherokee 2 Dr.(1981-83)
17=Cherokee 2 Dr.(1981-83)
73=Cherokee 2WD-2 Dr.(1984-86)
74=Cherokee 2WD-4 Dr.(1984-86)
18=Cherokee 4 Dr.(1981-83)
77=Cherokee 4WD-2 Dr.(1984-86)
78=Cherokee 4WD-4 Dr.(1984-86)
85=CJ-5 (1981-83)
86=CJ-6(1981)
87=CJ-7(1981-86)
88=CJ-8, Scrambler(1981-86)
64=Comanche 2WD-6 Ft. Box(1986)
66=Comanche 2WD-7 Ft. Box(1986)
63=Comanche 4WD-6 Ft. Box(1986)
65=Comanche 4WD-7 Ft. Box(1986)
15=Grand Wagoneer 4 Dr.(1984-86)
25=J-10 Truck 7 Ft. Box(1981-84)
26=J10 Truck 8 Ft. Box(1981-86)
27=J-20 Truck 8 Ft. Box(1981-86)
15=Wagoneer 4 Dr.(1981-83)
75=Wagoneer 4WD-4 Dr.(1984-86)

BODY
CJ=CJ-5, CJ-6, CJ-7, CJ-8, Scrambler(1981-86)
MJ=Comanche Pickup(1986)

STYLES
SJ=Wagoneer(1981-83), Grand Wagoneer(1984-86), Cherokee(1981-83), J-10, J-20(1981-86)
XJ=Wagoneer(1984-86), Cherokee(1984-86)

AR = Use as Required - = Non Illustrated Part P.A.R. = Paint as Required

« RETURN TO GROUP INDEX

PEDAL, CLUTCH LINKAGE EXPORT RIGHT HAND DRIVE SJ CHEROKEE, SJ WAGONEER, J10, J20
Figure 6-1200

81J06 1200

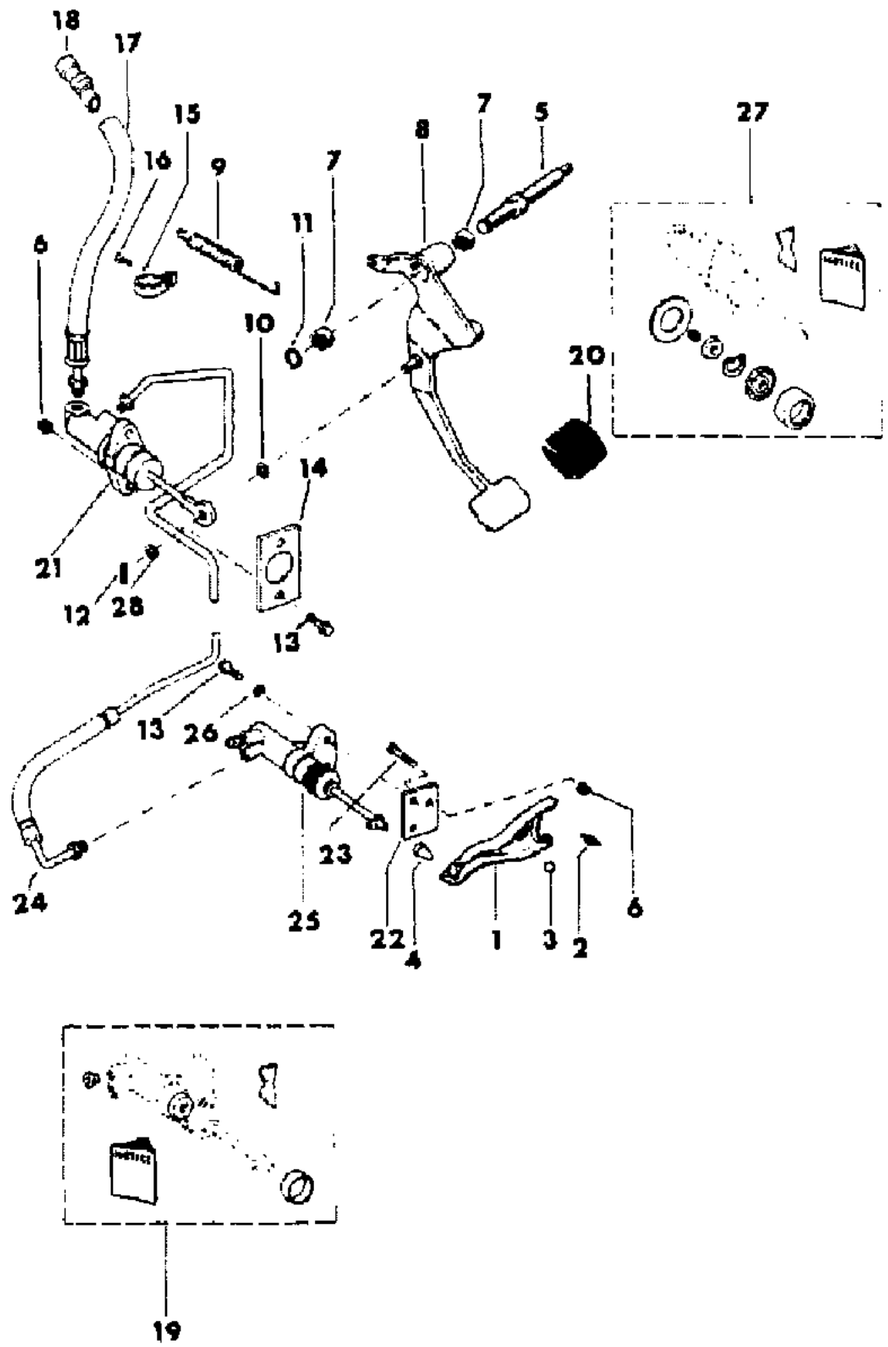

ITEM	PART NUMBER	QTY	BODY	MODEL	DESCRIPTION
1	J536 1620	1			LEVER, Clutch Throwout
2	J322 2799	1			SPRING
3	J016 9162	1			BALL
4	J321 7479	1			PIVOT
5	J535 1805	1			SHAFT
6	J400 1457	2			NUT
7	J094 9169	2			BEARING
8	J805 0475	1			PEDAL, Clutch
9	J535 7515	1			SPRING
10	J400 4616	1			WASHER, Wave
11	J091 2640	1			RING, Snap
12	J012 1224	1			PIN
13	J812 0512	2			BOLT
14	J805 0503	1			SPACER
15	J012 0525	1			CLIP
16	J942 0151	1			SCREW
17	J805 1504	1			RESERVOIR
18	J535 2955	1			VENT
19	J813 2782	1			REPAIR PACKAGE, Slave Cylinder
20	J536 3508	1			PAD, Clutch Pedal
21	J805 0461	1			CYLINDER ASSEMBLY, Clutch Master
22	J805 0467	1			PLATE
23	S018 0085	1			BOLT
24	J805 0412	1			TUBE ASSEMBLY ***
25	J323 7886	1			CYLINDER ASSEMBLY, Clutch Slave
26	J012 0214	1			WASHER
27	J813 2781	1			REPAIR PACKAGE, Master Cylinder
28	J012 0396	1			WASHER, Flat

MODEL CODES
16=Cherokee 2 Dr.(1981-83)
17=Cherokee 2 Dr.(1981-83)
73=Cherokee 2WD-2 Dr.(1984-86)
74=Cherokee 2WD-4 Dr.(1984-86)
18=Cherokee 4 Dr.(1981-83)
77=Cherokee 4WD-2 Dr.(1984-86)
78=Cherokee 4WD-4 Dr.(1984-86)
85=CJ-5 (1981-83)
86=CJ-6(1981)
87=CJ-7(1981-86)
88=CJ-8, Scrambler(1981-86)
64=Comanche 2WD-6 Ft. Box(1986)
66=Comanche 2WD-7 Ft. Box(1986)
63=Comanche 4WD-6 Ft. Box(1986)
65=Comanche 4WD-7 Ft. Box(1986)
15=Grand Wagoneer 4 Dr.(1984-86)
25=J-10 Truck 7 Ft. Box(1981-84)
26=J10 Truck 8 Ft. Box(1981-86)
27=J-20 Truck 8 Ft. Box(1981-86)
15=Wagoneer 4 Dr.(1981-83)
75=Wagoneer 4WD-4 Dr.(1984-86)

BODY
CJ=CJ-5, CJ-6, CJ-7, CJ-8, Scrambler(1981-86)
MJ=Comanche Pickup(1986)

STYLES
SJ=Wagoneer(1981-83), Grand Wagoneer(1984-86), Cherokee(1981-83), J-10, J-20(1981-86)
XJ=Wagoneer(1984-86), Cherokee(1984-86)

AR = Use as Required - = Non Illustrated Part P.A.R. = Paint as Required

« RETURN TO GROUP INDEX

ILLUSTRATION NOT AVAILABLE AT TIME OF PUBLICATION

GROUP 7 - COOLING

ILLUSTRATION TITLE	GROUP-FIG. NO.
GRILLE AND RELATED PARTS	
GRILLE AND RELATED PARTS CJ-5,6,7,8, SCRAMBLER	Fig. 7-100
GRILLE AND RELATED PARTS XJ CHEROKEE, XJ WAGONEER, COMANCHE	Fig. 7-200
GRILLE AND RELATED PARTS SJ CHEROKEE, SJ WAGONEER, J10, J20	Fig. 7-300
RADIATOR AND RELATED PARTS	
RADIATOR AND RELATED PARTS 1981-85 ISUZU DIESEL, EXPORT CJ-5,6,7,8	Fig. 7-400
RADIATOR AND RELATED PARTS 1986 RENAULT DIESEL, EXPORT CJ-7,8	Fig. 7-500
RADIATOR AND RELATED PARTS 1981-83 GM FOUR CYLINDER CJ-5,6,7,8, SCRAMBLER	Fig. 7-600
RADIATOR AND RELATED PARTS 1983-86 AMC FOUR CYLINDER CJ-7,8, SCRAMBLER	Fig. 7-700
RADIATOR AND RELATED PARTS 1981-86 SIX CYLINDER CJ-5,6,7,8, SCRAMBLER	Fig. 7-800
RADIATOR AND RELATED PARTS 1981 EIGHT CYLINDER CJ-5,6,7,8, SCRAMBLER	Fig. 7-900
RADIATOR AND RELATED PARTS 1985-86 RENAULT DIESEL, EXPORT XJ CHEROKEE, XJ WAGONEER, COMANCHE	Fig. 7-1000
RADIATOR AND RELATED PARTS 1984-86 FOUR CYLINDER GAS XJ CHEROKEE, XJ WAGONEER, COMANCHE	Fig. 7-1100
RADIATOR AND RELATED PARTS 1984-86 SIX CYLINDER XJ CHEROKEE, XJ WAGONEER, COMANCHE	Fig. 7-1200
RADIATOR AND RELATED PARTS 1981-86 SIX CYLINDER SJ CHEROKEE, SJ WAGONEER, J10	Fig. 7-1300
RADIATOR AND RELATED PARTS 1981-86 EIGHT CYLINDER SJ CHEROKEE, SJ WAGONEER, J10, J20	Fig. 7-1400
CONDENSER TANKS	
CONDENSER TANKS	Fig. 7-1500
OIL COOLER LINES	
OIL COOLER LINES AUTOMATIC TRANSMISSION CJ-5,6,7,8, SCRAMBLER	Fig. 7-1600
OIL COOLER LINES AUTOMATIC TRANSMISSION XJ CHEROKEE, XJ WAGONEER, COMANCHE	Fig. 7-1700
OIL COOLER LINES AUTOMATIC TRANSMISSION SJ CHEROKEE, SJ WAGONEER, J10, J20	Fig. 7-1800
DRIVE BELTS	
DRIVE BELTS CJ-5,6,7,8, SCRAMBLER	Fig. 7-1900
DRIVE BELTS XJ CHEROKEE, XJ WAGONEER COMANCHE	Fig. 7-2000
DRIVE BELTS SJ CHEROKEE, SJ WAGONEER J10, J20	Fig. 7-2100
DRIVE PULLEYS	
DRIVE PULLEYS CJ-5,6,7,8, SCRAMBLER	Fig. 7-2200
DRIVE PULLEYS XJ CHEROKEE, XJ WAGONEER, COMANCHE	Fig. 7-2300
DRIVE PULLEYS SJ CHEROKEE, SJ WAGONEER, J10, J20	Fig. 7-2400
WATER PUMPS	
WATER PUMP AND RELATED PARTS CJ-5,6,7,8, SCRAMBLER	Fig. 7-2500

ILLUSTRATION TITLE **GROUP-FIG. NO.**

WATER PUMPS (Continued)

WATER PUMP AND RELATED PARTS CJ-5,6,7,8, SCRAMBLER . . . . . Fig. 7-2500
WATER PUMP AND RELATED PARTS XJ CHEROKEE, XJ WAGONEER, COMANCHE . . . . . Fig. 7-2600
WATER PUMP AND RELATED PARTS SJ CHEROKEE, SJ WAGONEER, J10, J20 . . . . . Fig. 7-2700

GRILLE AND RELATED PARTS CJ-5,6,7,8, SCRAMBLER
Figure 7-100

81J07 100

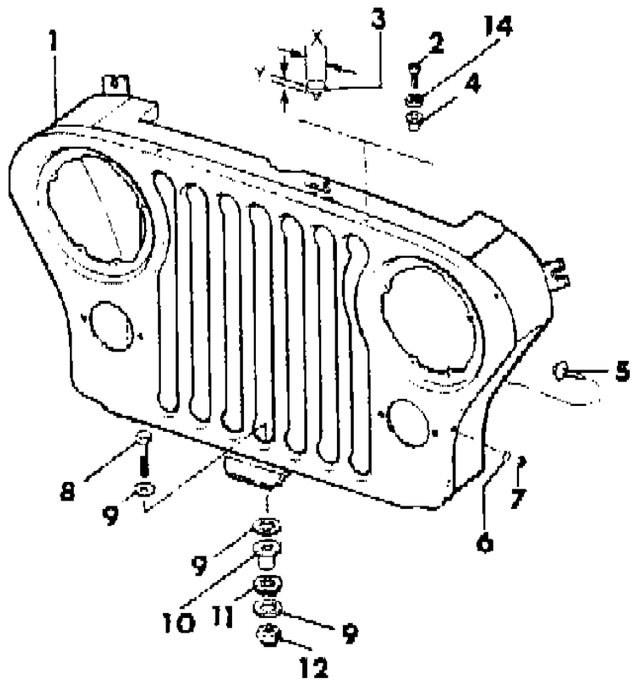

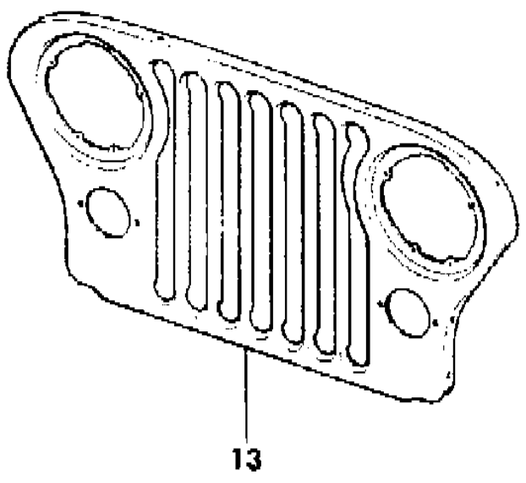

ITEM	PART NUMBER	QTY	BODY	MODEL	DESCRIPTION
1					GRILLE, Radiator
	J575 2656	1			1981-86
	J805 3182	1		87-88	1983-86: EXPORT, Severe Use
2	J400 6674	2			SCREW
3					BUMPER
	J576 1372	AR			X=.88", Y=.25"
	J545 5348	AR			X=.88", Y=.19"
	J096 8071	AR			X=1.06"
4	J400 5237	AR			NUT
5	J400 4455	6			SCREW
6	J044 6363	4			WASHER
7	J012 0376	4			NUT
8	J400 5816	AR			WASHER
9	J097 1672	1			WASHER
10	J097 1673	1			WASHER
11	J097 2278	1			WASHER
12	S027 2712	1			NUT
13	J575 2247	1			APPLIQUE, Radiator, Chrome
14	J400 6673	4			BUMPER

MODEL CODES

16=Cherokee 2 Dr.(1981-83)	78=Cherokee 4WD-4 Dr.(1984-86)	64=Comanche 2WD-6 Ft. Box(1986)	25=J-10 Truck 7 Ft. Box(1981-84)
17=Cherokee 2 Dr.(1981-83)	85=CJ-5 (1981-83)	66=Comanche 2WD-7 Ft. Box(1986)	26=J10 Truck 8 Ft. Box(1981-86)
73=Cherokee 2WD-2 Dr.(1984-86)	86=CJ-6(1981)	63=Comanche 4WD-6 Ft. Box(1986)	27=J-20 Truck 8 Ft. Box(1981-86)
74=Cherokee 2WD-4 Dr.(1984-86)	87=CJ-7(1981-86)	65=Comanche 4WD-7 Ft. Box(1986)	15=Wagoneer 4 Dr.(1981-83)
18=Cherokee 4 Dr.(1981-83)	88=CJ-8, Scrambler(1981-86)	15=Grand Wagoneer 4 Dr.(1984-86)	75=Wagoneer 4WD-4 Dr.(1984-86)
77=Cherokee 4WD-2 Dr.(1984-86)			

BODY
CJ=CJ-5, CJ-6, CJ-7, CJ-8, Scrambler(1981-86)
MJ=Comanche Pickup(1986)

STYLES
SJ=Wagoneer(1981-83), Grand Wagoneer(1984-86), Cherokee(1981-83), J-10, J-20(1981-86)
XJ=Wagoneer(1984-86), Cherokee(1984-86)

AR = Use as Required - = Non Illustrated Part P.A.R. = Paint as Required

« RETURN TO GROUP INDEX

GRILLE AND RELATED PARTS XJ CHEROKEE, XJ WAGONEER, COMANCHE
Figure 7-200

81J07 200

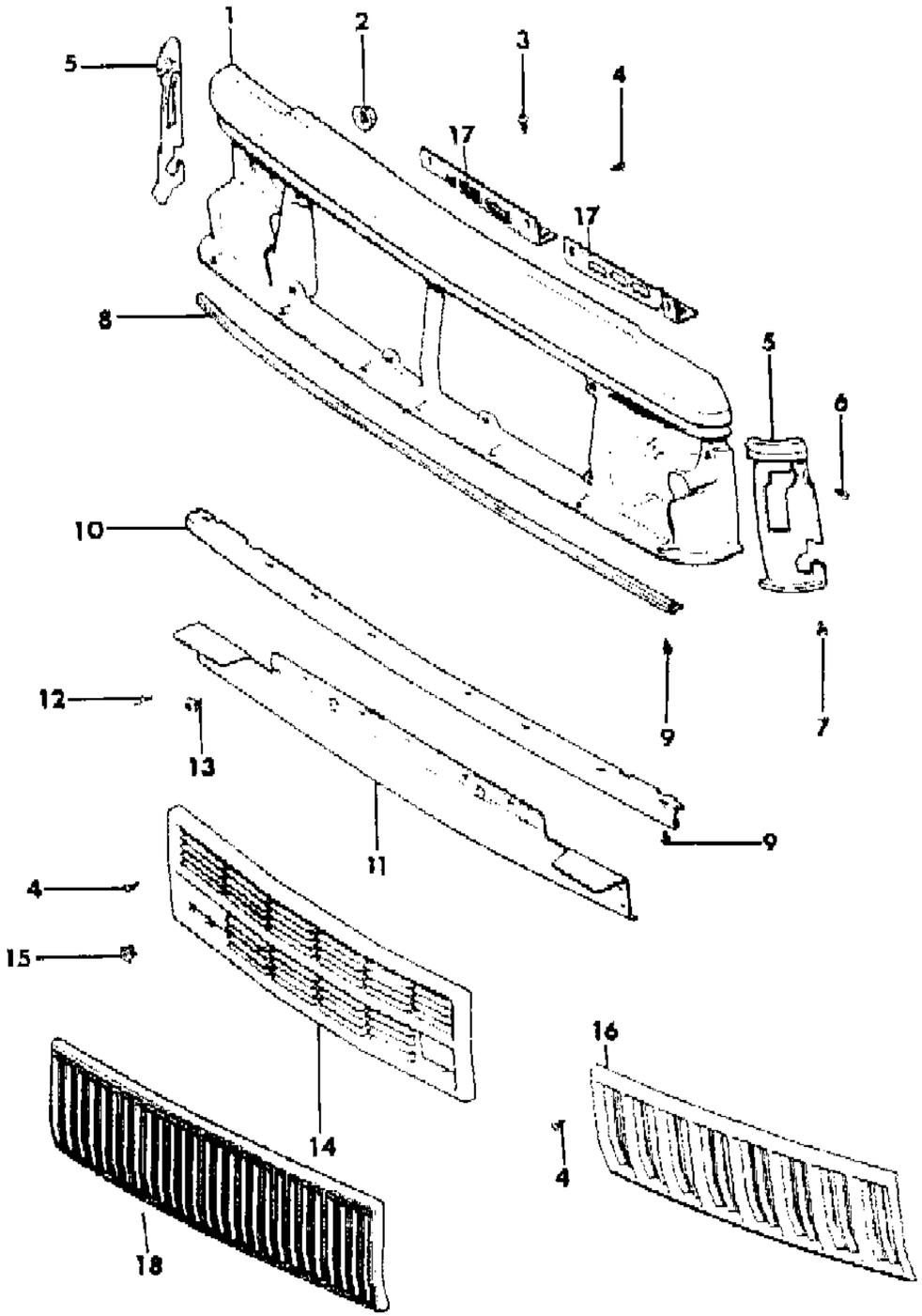

ITEM	PART NUMBER	QTY	BODY	MODEL	DESCRIPTION
1					PANEL, Grille
	5500 1972	1			Cherokee, Comanche
					Wagoneer
	5500 4882	1			1984-85
	5500 8062	1			1986
2	3420 1246	8			NUT
3	1150 0994	4			SCREW
4	3420 1426	12			SCREW
5	5500 2308-9	1			MOULDING, Grille
6	3420 1372	4			SCREW
7	1150 2864	6			SCREW
8	5500 1480	1			MOULDING, Grille, Chrome
9					SCREW
	3420 1418	18			1984
	3420 2323	18			1985-86
10					MOULDING, Grille
	5500 1477	1			Chrome; Cherokee, Comanche
	5500 9297	1		75	Chrome
11					DEFLECTOR, Air ***
	5500 2540	1			1984-85: P.A.R.
	5501 3616	1			1986: P.A.R.
12					RIVET
	3420 1631	1			Black, P.A.R.
	3420 1835	1			Silver, P.A.R.
13	3420 1360	5			SCREW
14	5500 7974	1		75	GRILLE, Radiator, Chrome-Black
15	J400 4689	8			NUT
16					GRILLE, Radiator
	5500 2229	1			Black-Chrome, Cherokee, Comanche
	5500 0153	1			Black-Silver, Cherokee
	5500 0153	1			Black, P.A.R., Cherokee, Comanche
17	5500 2064-5	1			BRACKET, Support
18	5500 3283	1		75	GRILLE, Radiator, Black-Chrome

MODEL CODES

16=Cherokee 2 Dr.(1981-83)	78=Cherokee 4WD-4 Dr.(1984-86)	64=Comanche 2WD-6 Ft. Box(1986)	25=J-10 Truck 7 Ft. Box(1981-84)
17=Cherokee 2 Dr.(1981-83)	85=CJ-5 (1981-83)	66=Comanche 2WD-7 Ft. Box(1986)	26=J10 Truck 8 Ft. Box(1981-86)
73=Cherokee 2WD-2 Dr.(1984-86)	86=CJ-6(1981)	63=Comanche 4WD-6 Ft. Box(1986)	27=J-20 Truck 8 Ft. Box(1981-86)
74=Cherokee 2WD-4 Dr.(1984-86)	87=CJ-7(1981-86)	65=Comanche 4WD-7 Ft. Box(1986)	15=Wagoneer 4 Dr.(1981-83)
18=Cherokee 4 Dr.(1981-83)	88=CJ-8, Scrambler(1981-86)	15=Grand Wagoneer 4 Dr.(1984-86)	75=Wagoneer 4WD-4 Dr.(1984-86)
77=Cherokee 4WD-2 Dr.(1984-86)			

BODY
CJ=CJ-5, CJ-6, CJ-7, CJ-8, Scrambler(1981-86)
MJ=Comanche Pickup(1986)

STYLES
SJ=Wagoneer(1981-83), Grand Wagoneer(1984-86), Cherokee(1981-83), J-10, J-20(1981-86)
XJ=Wagoneer(1984-86), Cherokee(1984-86)

AR = Use as Required - = Non Illustrated Part P.A.R. = Paint as Required

« RETURN TO GROUP INDEX

GRILLE AND RELATED PARTS SJ CHEROKEE, SJ WAGONEER, J10, J20
Figure 7-300

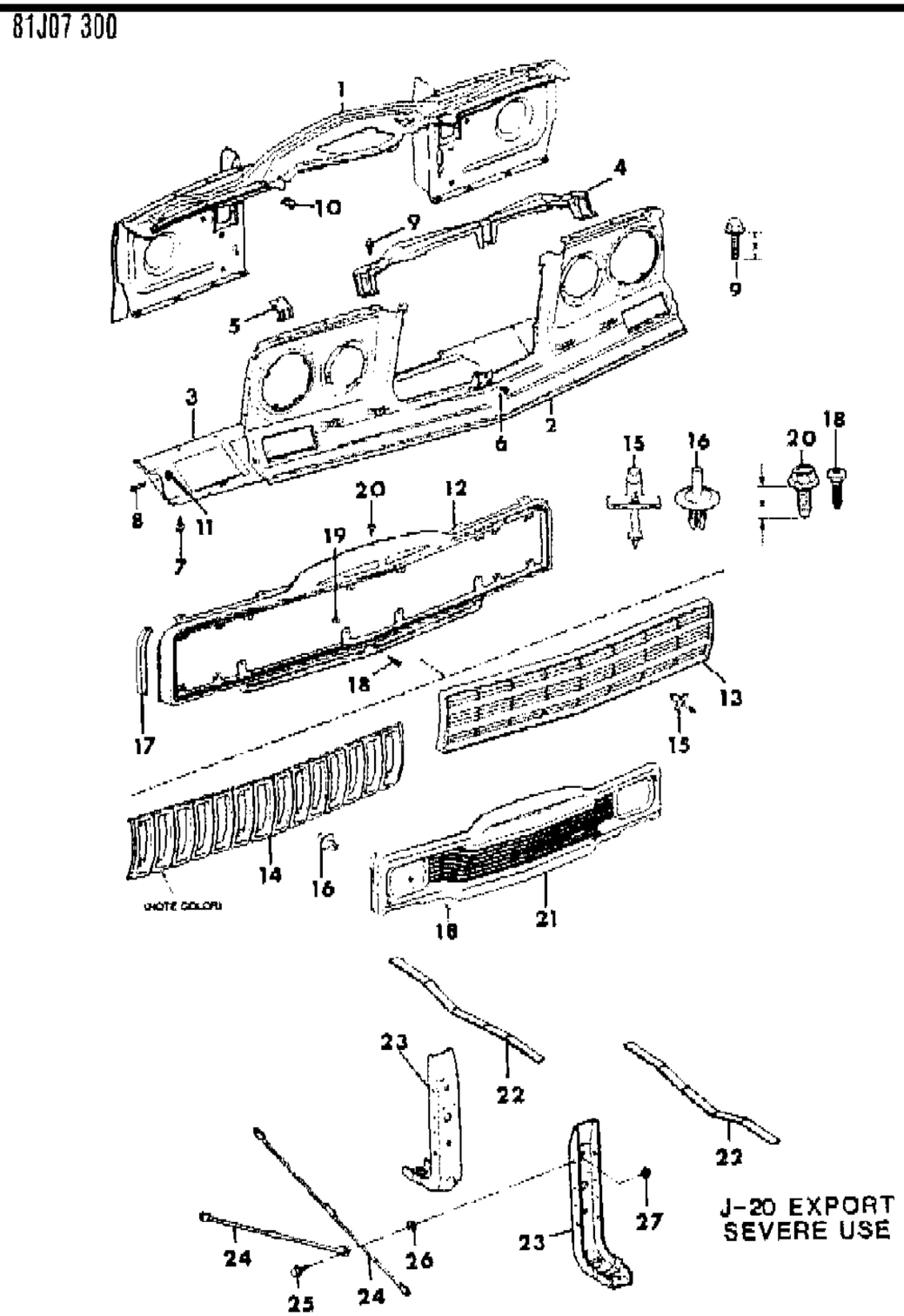

ITEM	PART NUMBER	QTY	BODY	MODEL	DESCRIPTION
1					SUPPORT, Radiator
	J575 7416	1			Six Cylinder Engine
	J575 7410	1			Eight Cylinder Engine
2					SUPPORT, Radiator
	J546 6522	1		15	1981-83: Six Cylinder Engine
	J546 6509	1		15	1981-83: Eight Cylinder Engine
					PANEL, Grille
					Six Cylinder Engine
	J575 7418	1			1981-83: Without "Wagoneer" Model, Without "Cherokee 18"
					Model for EXPORT
	J575 7418	1			1981-86: Non-Regulated Markets, Right Hand Drive
	J546 6522	1		18	1982-85: EXPORT
	J546 6522	1			1984-85: Without "Cherokee 18" Model for EXPORT
	J575 7418	1			1986: Without Economic Commission of Europe
	J546 6522	1			1986: With Economic Commission of Europe
					Eight Cylinder Engine
	J575 7412	1			1981-83: Without "Wagoneer" Model, Without "Chereokee 18"
					Model for EXPORT
	J575 7412	1			1981-86: Right Hand Drive
	J546 6509	1		18	1982-85: EXPORT
	J546 6509	1			1984-85: Without "Cherokee 18" Model for EXPORT
	J575 7412	1			1986: Without Economic Commission of Europe
	J546 6509	1			1986: With Economic Commission of Europe
3					SHIELD
	J546 6525	1			Six Cylinder Engine
	J546 6511	1			Eight Cylinder Engine
4	J546 5789	1			BRACKET
5	J546 9813	2			BRACKET
6	J400 6126	AR			NUT
7	J096 2398	8			SCREW
8	J095 8166	2			STUD
9					SCREW
	J400 5354	6			.87"
	J400 4455	12			1.12"
10	J400 4208	4			NUT, Spring
11	J027 1184	2			NUT, Hex
12					GRILLE, Radiator Surround
	J576 4077	1		15	1985: EXPORT, Venezuela
	5500 7704	1		15	1986

MODEL CODES

16=Cherokee 2 Dr.(1981-83)
17=Cherokee 2 Dr.(1981-83)
73=Cherokee 2WD-2 Dr.(1984-86)
74=Cherokee 2WD-4 Dr.(1984-86)
18=Cherokee 4 Dr.(1981-83)
77=Cherokee 4WD-2 Dr.(1984-86)
78=Cherokee 4WD-4 Dr.(1984-86)
85=CJ-5 (1981-83)
86=CJ-6(1981)
87=CJ-7(1981-86)
88=CJ-8, Scrambler(1981-86)
64=Comanche 2WD-6 Ft. Box(1986)
66=Comanche 2WD-7 Ft. Box(1986)
63=Comanche 4WD-6 Ft. Box(1986)
65=Comanche 4WD-7 Ft. Box(1986)
15=Grand Wagoneer 4 Dr.(1984-86)
25=J-10 Truck 7 Ft. Box(1981-84)
26=J10 Truck 8 Ft. Box(1981-86)
27=J-20 Truck 8 Ft. Box(1981-86)
15=Wagoneer 4 Dr.(1981-83)
75=Wagoneer 4WD-4 Dr.(1984-86)

BODY
CJ=CJ-5, CJ-6, CJ-7, CJ-8, Scrambler(1981-86)
MJ=Comanche Pickup(1986)

STYLES
SJ=Wagoneer(1981-83), Grand Wagoneer(1984-86), Cherokee(1981-83), J-10, J-20(1981-86)
XJ=Wagoneer(1984-86), Cherokee(1984-86)

AR = Use as Required - = Non Illustrated Part P.A.R. = Paint as Required

GRILLE AND RELATED PARTS SJ CHEROKEE, SJ WAGONEER, J10, J20
Figure 7-300

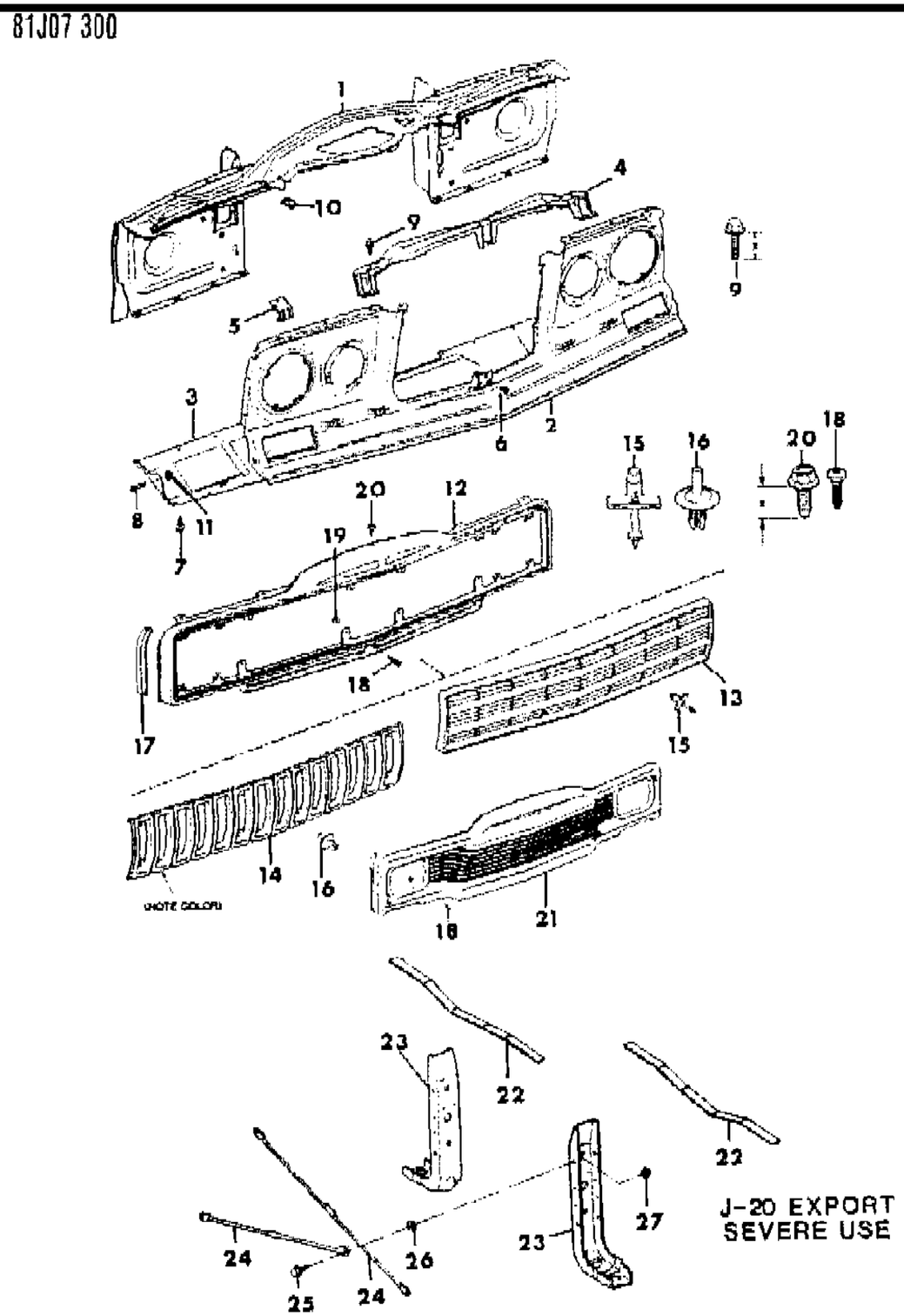

ITEM	PART NUMBER	QTY	BODY	MODEL	DESCRIPTION
	J575 2837	1			1981-86: Model 16,17,18,25,26,27
13	5500 7703	1		15	GRILLE, Radiator
14					GRILLE, Radiator
	J575 6766	1		15	1985: Chrome, EXPORT, Venezuela
	J575 2836	1			1981-82: Dark Argent, Model 16,17,18,25,26,27
	J575 6766	1			1981-86: Chrome, Model 16,17,18,25,26,27
	J575 8704	1		17,18,2	1981-86: Black
15	J400 7469	8			RIVET
16	J400 4647	8			RIVET
17					WELT
	J575 1182-3	1		15	1981-85
	J575 8838	2		15	1985: EXPORT, Venezuela
	J575 8838	2		15	1986
	J575 8838	2			1981-86: Model 16,17,18,25,26,27
	J575 1182-3	1		18	1982-85: EXPORT
	J575 1182-3	1		25,26,2	1984-85
18					SCREW
	J400 6127	AR		15	1981-85
	J400 6127	AR		15	1985: Venezuela
	J400 6127	AR		18	1982-85: EXPORT
	J400 6127	AR		25,26,2	1984-85: EXPORT
19	J400 6126	3			NUT
20					SCREW
	J400 4642	AR		15	1981-85: 0.5"
	J400 4455	AR		15	1985: EXPORT Venezuela, 1.1"
	S097 4764	AR		15	1985: EXPORT Venezuela, .05"
	J400 4455	AR			1981-86: Model 16,17,18,25,26,27, 1.1"
	J400 5113	AR			1981-86: Model 16,17,18,25,26,27, 0.8"
	J400 4642	AR		27	1984-85: EXPORT
21					GRILLE, Radiator
	J546 5070	1		15	1981-85
	J546 5070	1		18	1982-85: EXPORT
	J546 5070	1		27	1984-85: EXPORT
22	9500 0020	2			REINFORCEMENT
23	J545 5173	2			BRACKET
24	9500 0019	2			BRACE
25	J400 4455	4			BOLT
26	J400 6839	4			SPACER
27	J400 6080	4			NUT

MODEL CODES

16=Cherokee 2 Dr.(1981-83)	78=Cherokee 4WD-4 Dr.(1984-86)	64=Comanche 2WD-6 Ft. Box(1986)	25=J-10 Truck 7 Ft. Box(1981-84)
17=Cherokee 2 Dr.(1981-83)	85=CJ-5 (1981-83)	66=Comanche 2WD-7 Ft. Box(1986)	26=J10 Truck 8 Ft. Box(1981-86)
73=Cherokee 2WD-2 Dr.(1984-86)	86=CJ-6(1981)	63=Comanche 4WD-6 Ft. Box(1986)	27=J-20 Truck 8 Ft. Box(1981-86)
74=Cherokee 2WD-4 Dr.(1984-86)	87=CJ-7(1981-86)	65=Comanche 4WD-7 Ft. Box(1986)	15=Wagoneer 4 Dr.(1981-83)
18=Cherokee 4 Dr.(1981-83)	88=CJ-8, Scrambler(1981-86)	15=Grand Wagoneer 4 Dr.(1984-86)	75=Wagoneer 4WD-4 Dr.(1984-86)
77=Cherokee 4WD-2 Dr.(1984-86)			

BODY
CJ=CJ-5, CJ-6, CJ-7, CJ-8, Scrambler(1981-86)
MJ=Comanche Pickup(1986)

STYLES
SJ=Wagoneer(1981-83), Grand Wagoneer(1984-86), Cherokee(1981-83), J-10, J-20(1981-86)
XJ=Wagoneer(1984-86), Cherokee(1984-86)

AR = Use as Required - = Non Illustrated Part P.A.R. = Paint as Required

« RETURN TO GROUP INDEX

RADIATOR AND RELATED PARTS 1981-85 ISUZU DIESEL, EXPORT CJ-5,6,7,8
Figure 7-400

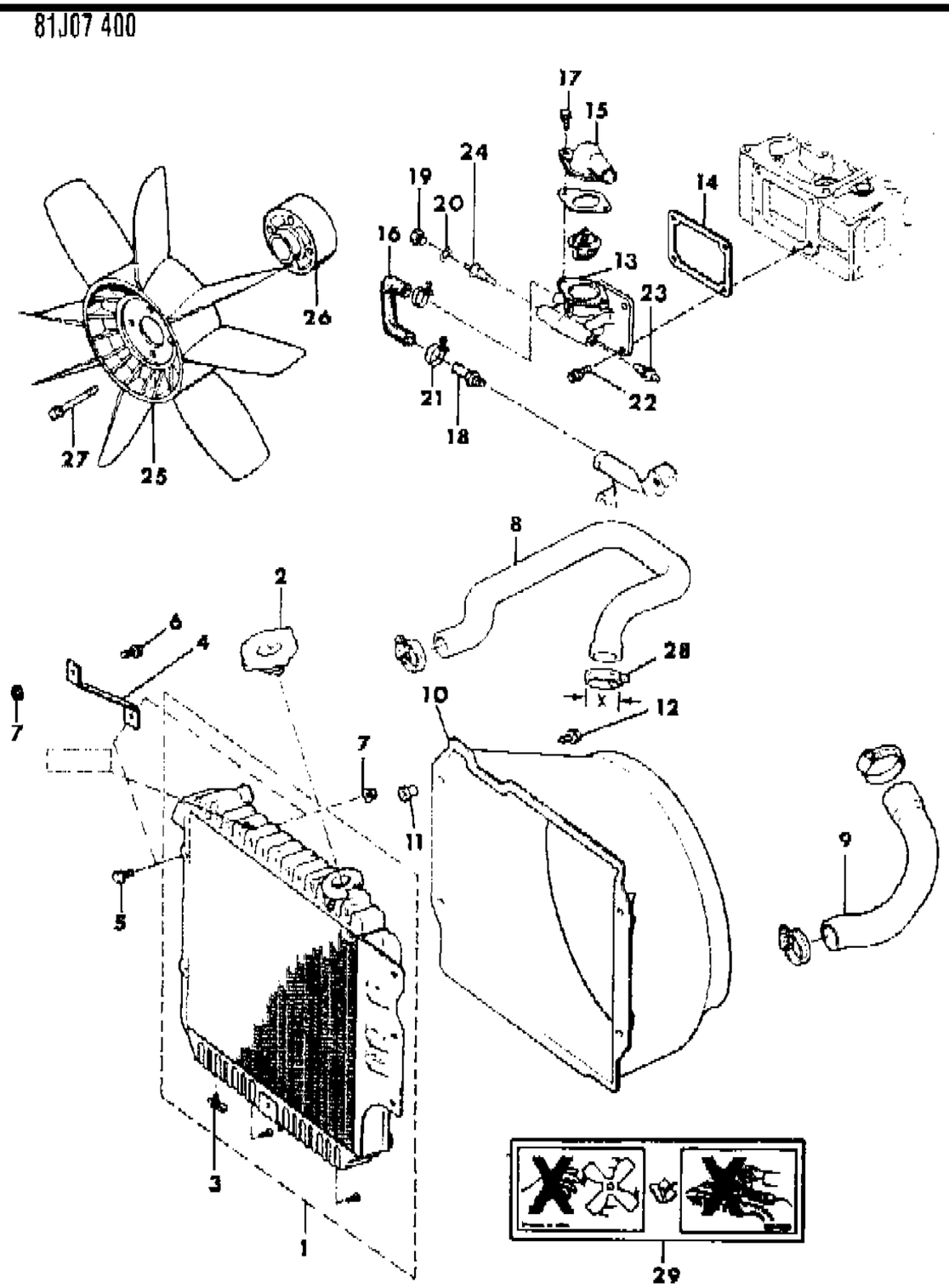

ITEM	PART NUMBER	QTY	BODY	MODEL	DESCRIPTION
1	J536 1455	1			RADIATOR
2					CAP
	J535 2954	1			Without Coolant Recovery System
					With Coolant Recovery System
	J590 0584	1			1981
	J535 8177	1			1982-85
3	J535 9274	1			DRAINCOCK
4	J536 1558	1			BRACKET
5	J400 4426	2			SCREW
6	S016 1895	2			SCREW
7	J044 5446	AR			NUT
8	J806 0605	1			HOSE, Inlet
9	J806 0604	1			HOSE, Outlet
10	J536 1454	1			SHROUD
11	J096 8072	AR			BUMPER
12					SCREW
	J400 5982	2			.25"
	J097 4764	2			.50"
13	J806 0293	1			HOUSING, Thermostat
14	J806 0295	1			GASKET
15	J806 0292	1			COVER
16	J806 0294	1			HOSE
17	J806 0028	2			BOLT
18	J806 0140	1			CONNECTOR
19	J806 0109	1			PLUG
20	J806 0093	1			GASKET
21	J806 0148	2			CLAMP
22					BOLT
	J806 0024	2			12mm
	J806 0019	2			20mm
23	J575 2305	1			SENDER, Coolant Temp ***
24	J547 0000	1			SENSOR, Coolant Temp
25	J806 0289	1			FAN, Cooling
26	J806 0288	1			SPACER
27	J806 0056	4			BOLT
28					CLAMP
	J320 3078	AR			1.31" thru 2.25"
	J320 3079	AR			1.81" thru 2.75"
29	J323 4806	1			LABEL, Fan

MODEL CODES

16=Cherokee 2 Dr.(1981-83)
17=Cherokee 2 Dr.(1981-83)
73=Cherokee 2WD-2 Dr.(1984-86)
74=Cherokee 2WD-4 Dr.(1984-86)
18=Cherokee 4 Dr.(1981-83)
77=Cherokee 4WD-2 Dr.(1984-86)
78=Cherokee 4WD-4 Dr.(1984-86)
85=CJ-5 (1981-83)
86=CJ-6(1981)
87=CJ-7(1981-86)
88=CJ-8, Scrambler(1981-86)
64=Comanche 2WD-6 Ft. Box(1986)
66=Comanche 2WD-7 Ft. Box(1986)
63=Comanche 4WD-6 Ft. Box(1986)
65=Comanche 4WD-7 Ft. Box(1986)
15=Grand Wagoneer 4 Dr.(1984-86)
25=J-10 Truck 7 Ft. Box(1981-84)
26=J10 Truck 8 Ft. Box(1981-86)
27=J-20 Truck 8 Ft. Box(1981-86)
15=Wagoneer 4 Dr.(1981-83)
75=Wagoneer 4WD-4 Dr.(1984-86)

BODY
CJ=CJ-5, CJ-6, CJ-7, CJ-8, Scrambler(1981-86)
MJ=Comanche Pickup(1986)

STYLES
SJ=Wagoneer(1981-83), Grand Wagoneer(1984-86), Cherokee(1981-83), J-10, J-20(1981-86)
XJ=Wagoneer(1984-86), Cherokee(1984-86)

AR = Use as Required - = Non Illustrated Part P.A.R. = Paint as Required

« RETURN TO GROUP INDEX

RADIATOR AND RELATED PARTS 1986 RENAULT DIESEL, EXPORT CJ-7,8
Figure 7-500

81J07 500

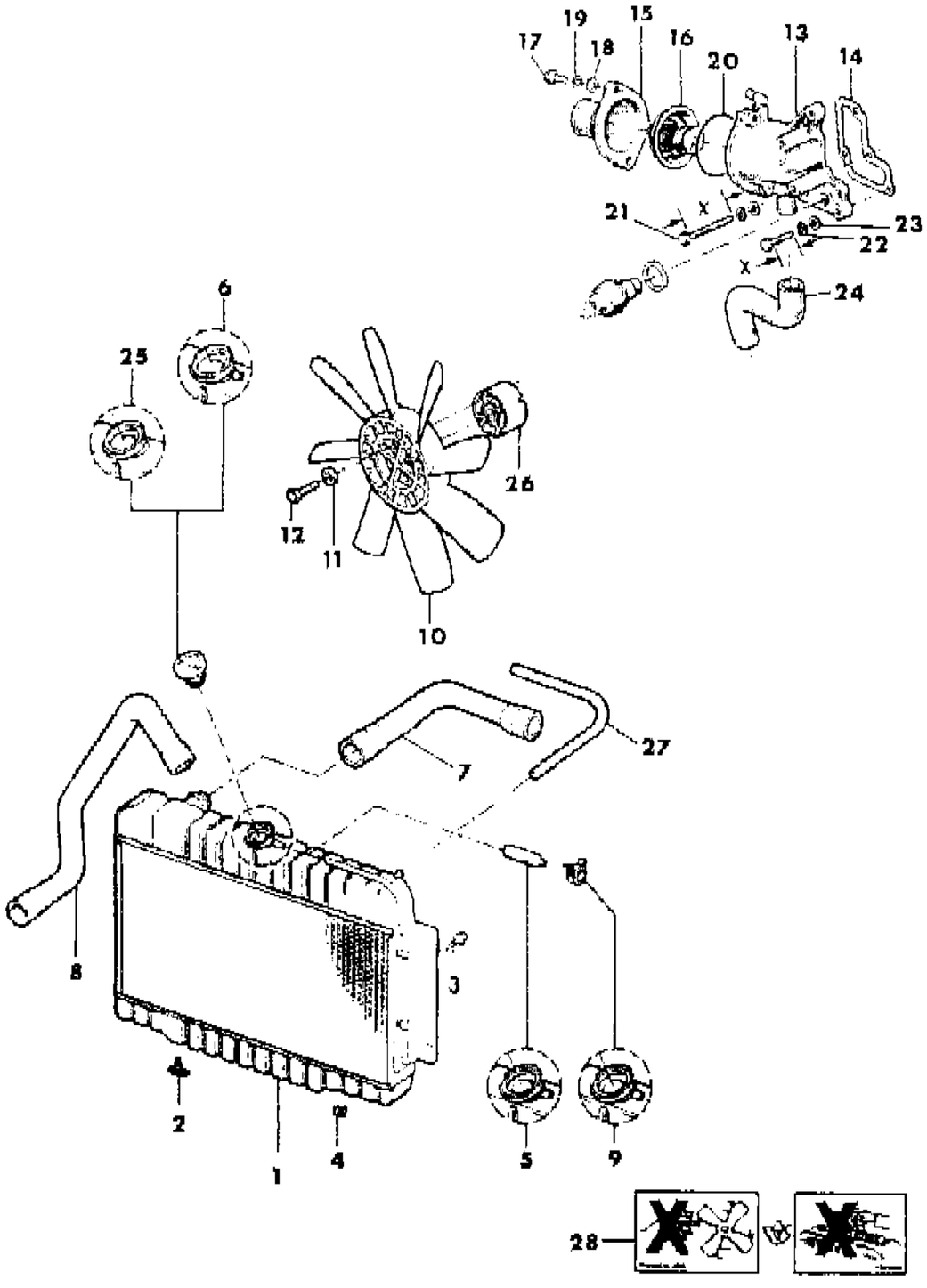

ITEM	PART NUMBER	QTY	BODY	MODEL	DESCRIPTION
1	J535 3761	1			RADIATOR
2	J535 9274	1			DRAINCOCK
3	J400 3556	4			SCREW
4	J400 4208	4			NUT
5	J400 7095	1			HOSE
6	J536 4160	1			CAP
7	J536 4463	1			HOSE
8	J536 4771	1			HOSE
9	J322 2900	1			CLAMP
10	T066 9821	1			FAN, Cooling
11	J140 2084	4			WASHER
12	1150 0815	4			BOLT
13	T061 6264	1			HOUSING
14	T134 8932	1			GASKET
15	T065 6732	1			COVER
16	T066 5226	1			THERMOSTAT
17	T300 1634	2			BOLT
18	T140 2065	2			WASHER, Plain
19	T140 2092	2			WASHER, Lock
20	T024 5057	1			O-RING
21					BOLT
	T300 1614	1			30mm
	T300 1238	3			65mm
22	T140 2093	AR			WASHER, Lock
23	T305 3037	AR			WASHER, Plain
24	T066 1636	1			HOSE
25	J536 4692	1			CAP
26	J536 4532	1			SPACER
27	J812 5823	1			HOSE
28	J323 4806	1			LABEL, Fan

MODEL CODES

16=Cherokee 2 Dr.(1981-83)
17=Cherokee 2 Dr.(1981-83)
73=Cherokee 2WD-2 Dr.(1984-86)
74=Cherokee 2WD-4 Dr.(1984-86)
18=Cherokee 4 Dr.(1981-83)
77=Cherokee 4WD-2 Dr.(1984-86)
78=Cherokee 4WD-4 Dr.(1984-86)
85=CJ-5 (1981-83)
86=CJ-6(1981)
87=CJ-7(1981-86)
88=CJ-8, Scrambler(1981-86)
64=Comanche 2WD-6 Ft. Box(1986)
66=Comanche 2WD-7 Ft. Box(1986)
63=Comanche 4WD-6 Ft. Box(1986)
65=Comanche 4WD-7 Ft. Box(1986)
15=Grand Wagoneer 4 Dr.(1984-86)
25=J-10 Truck 7 Ft. Box(1981-84)
26=J10 Truck 8 Ft. Box(1981-86)
27=J-20 Truck 8 Ft. Box(1981-86)
15=Wagoneer 4 Dr.(1981-83)
75=Wagoneer 4WD-4 Dr.(1984-86)

BODY
CJ=CJ-5, CJ-6, CJ-7, CJ-8, Scrambler(1981-86)
MJ=Comanche Pickup(1986)

STYLES
SJ=Wagoneer(1981-83), Grand Wagoneer(1984-86), Cherokee(1981-83), J-10, J-20(1981-86)
XJ=Wagoneer(1984-86), Cherokee(1984-86)

AR = Use as Required - = Non Illustrated Part P.A.R. = Paint as Required

« RETURN TO GROUP INDEX

RADIATOR AND RELATED PARTS 1981-83 GM FOUR CYLINDER CJ-5,6,7,8, SCRAMBLER
Figure 7-600

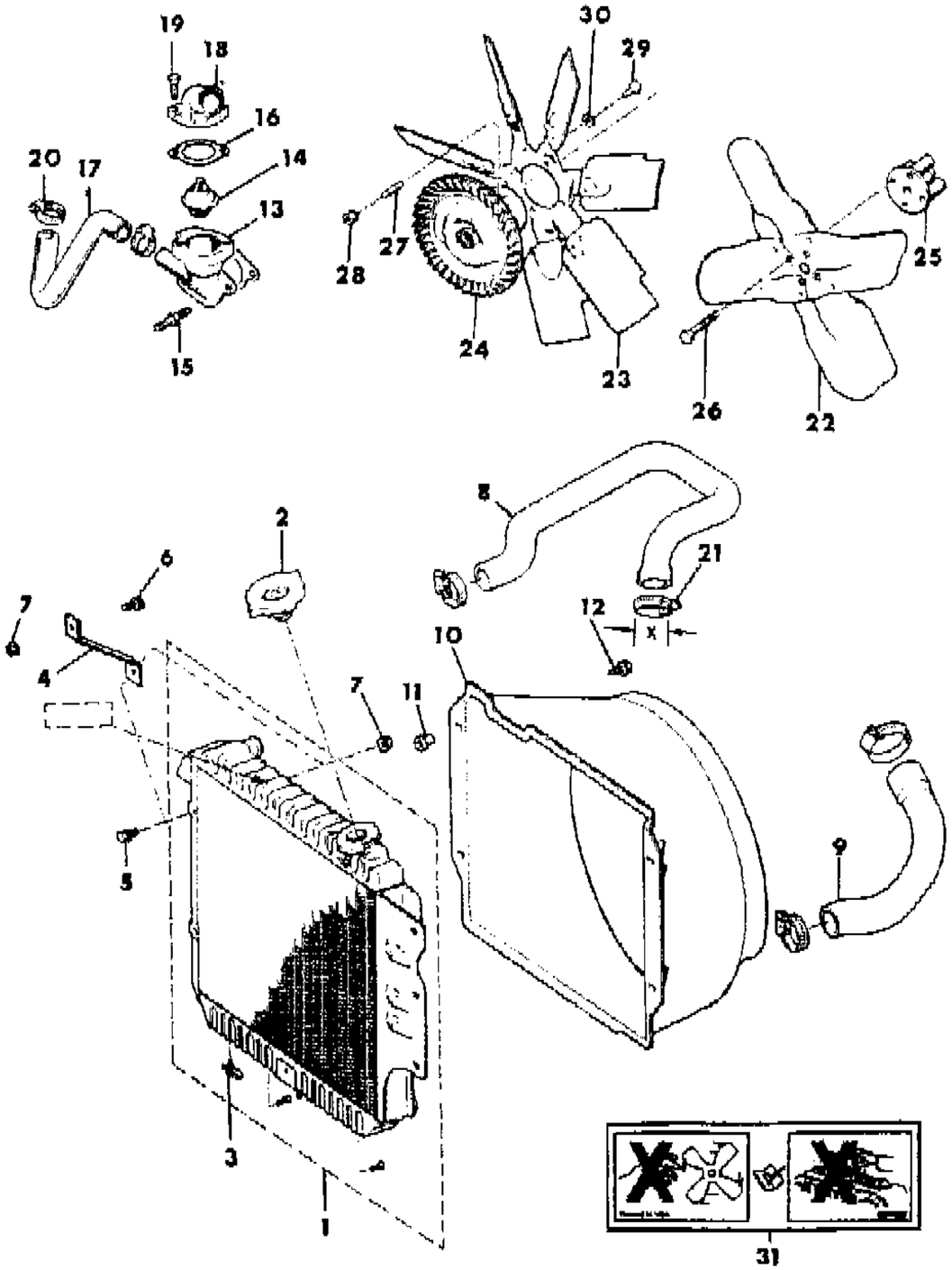

ITEM	PART NUMBER	QTY	BODY	MODEL	DESCRIPTION
1	J536 2898	1			RADIATOR
2					CAP
	J535 2954	1			Without Coolant Recovery System
					With Coolant Recovery System
	J590 0584	1			1981
	J535 8177	1			1982-83
3	J535 9274	1			DRAINCOCK
4	J536 1558	2			BRACKET
5	J400 4426	2			SCREW
6	S016 1895	2			SCREW
7	J044 5446	AR			NUT
8	J536 0950	1			HOSE, Inlet
9	J536 0951	1			HOSE, Outlet
10	J535 9774	1			SHROUD
11	J096 8072	AR			BUMPER
12					SCREW
	J400 5982	2			.25"
	J097 4764	2			.50"
13					HOUSING, Thermostat
	J813 2282	1			1981
	J813 4147	1			1982-83
14					THERMOSTAT PACKAGE, Engine Coolant
	J813 2280	1			1981
	J813 4146	1			1982-83
15	J813 2284	2			STUD
16					GASKET
	J813 2277	1			1981
	J813 3430	1			1982-83
17					HOSE
	J813 2707	1			1981
	J813 4153	1			1982-83
18	J813 2276	1			COVER
19	1150 4330	2			BOLT
20	J320 3076	2			CLAMP
21					CLAMP
	J320 3078	AR			1.31" thru 2.25"
	J320 3079	AR			1.81" thru 2.75"
22	J323 6604	1			FAN, Cooling, Standard Duty
23	J323 6530	1			FAN, Cooling, Heavy Duty

MODEL CODES

16=Cherokee 2 Dr.(1981-83)
17=Cherokee 2 Dr.(1981-83)
73=Cherokee 2WD-2 Dr.(1984-86)
74=Cherokee 2WD-4 Dr.(1984-86)
18=Cherokee 4 Dr.(1981-83)
77=Cherokee 4WD-2 Dr.(1984-86)
78=Cherokee 4WD-4 Dr.(1984-86)
85=CJ-5 (1981-83)
86=CJ-6(1981)
87=CJ-7(1981-86)
88=CJ-8, Scrambler(1981-86)
64=Comanche 2WD-6 Ft. Box(1986)
66=Comanche 2WD-7 Ft. Box(1986)
63=Comanche 4WD-6 Ft. Box(1986)
65=Comanche 4WD-7 Ft. Box(1986)
15=Grand Wagoneer 4 Dr.(1984-86)
25=J-10 Truck 7 Ft. Box(1981-84)
26=J10 Truck 8 Ft. Box(1981-86)
27=J-20 Truck 8 Ft. Box(1981-86)
15=Wagoneer 4 Dr.(1981-83)
75=Wagoneer 4WD-4 Dr.(1984-86)

BODY
CJ=CJ-5, CJ-6, CJ-7, CJ-8, Scrambler(1981-86)
MJ=Comanche Pickup(1986)

STYLES
SJ=Wagoneer(1981-83), Grand Wagoneer(1984-86), Cherokee(1981-83), J-10, J-20(1981-86)
XJ=Wagoneer(1984-86), Cherokee(1984-86)

AR = Use as Required - = Non Illustrated Part P.A.R. = Paint as Required

« RETURN TO GROUP INDEX »

RADIATOR AND RELATED PARTS 1981-83 GM FOUR CYLINDER CJ-5,6,7,8, SCRAMBLER
Figure 7-600

81J07 600

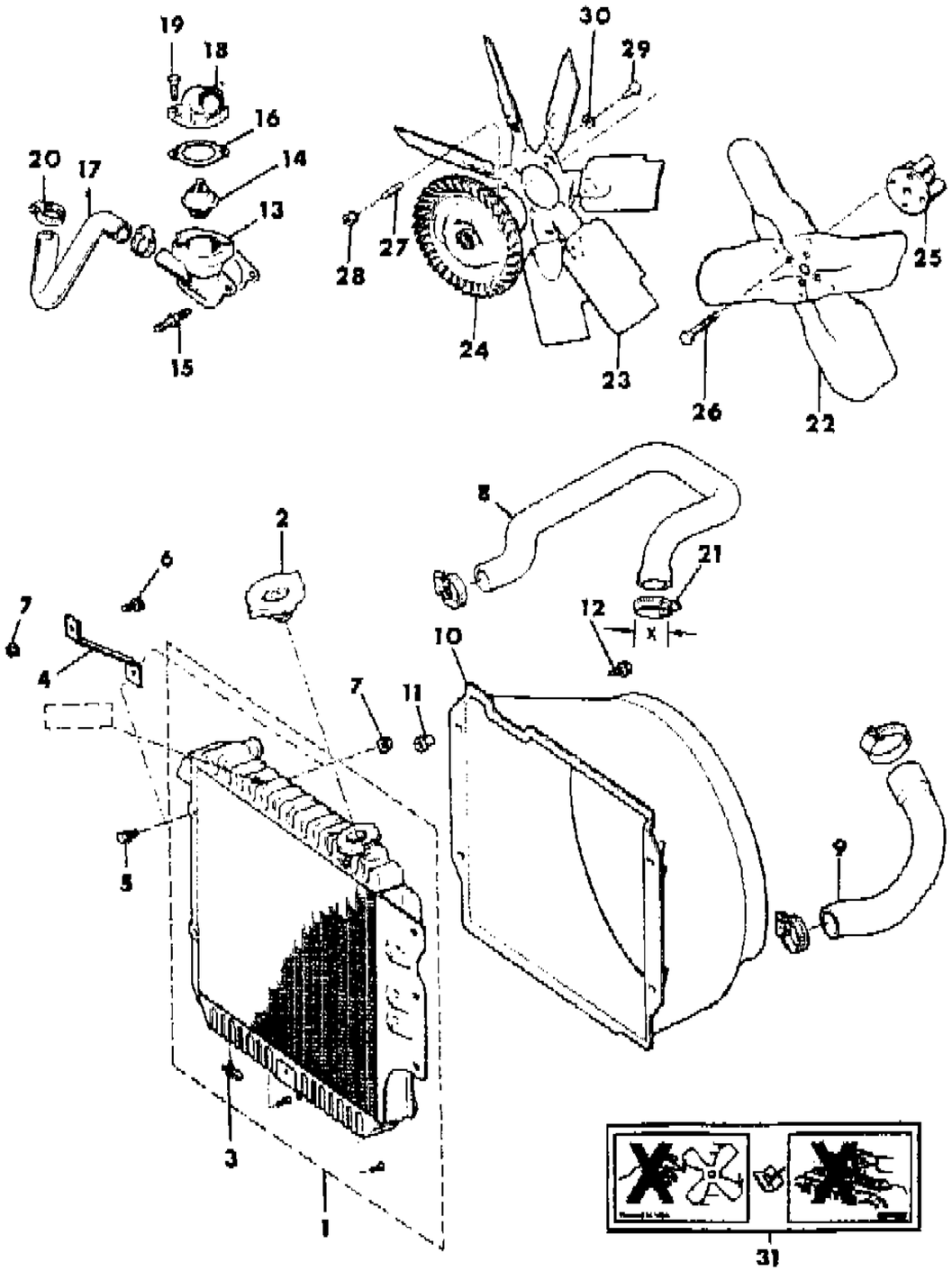

ITEM	PART NUMBER	QTY	BODY	MODEL	DESCRIPTION
24					DRIVE, Fan, Heavy Duty
	J323 9377	1			1981
	J324 1856	1			1982-83
25	J323 6501	1			SPACER, Standard Duty
26	S018 1622	4			BOLT, Standard Duty
27	J400 6714	4			STUD, Heavy Duty
28	J027 1184	4			NUT, Heavy Duty
29	J018 0075	4			BOLT, Heavy Duty
30	J012 0214	4			WASHER, Lock, Heavy Duty
31	J323 4806	1			LABEL, Fan

MODEL CODES

16=Cherokee 2 Dr.(1981-83)	78=Cherokee 4WD-4 Dr.(1984-86)	64=Comanche 2WD-6 Ft. Box(1986)	25=J-10 Truck 7 Ft. Box(1981-84)
17=Cherokee 2 Dr.(1981-83)	85=CJ-5 (1981-83)	66=Comanche 2WD-7 Ft. Box(1986)	26=J10 Truck 8 Ft. Box(1981-86)
73=Cherokee 2WD-2 Dr.(1984-86)	86=CJ-6(1981)	63=Comanche 4WD-6 Ft. Box(1986)	27=J-20 Truck 8 Ft. Box(1981-86)
74=Cherokee 2WD-4 Dr.(1984-86)	87=CJ-7(1981-86)	65=Comanche 4WD-7 Ft. Box(1986)	15=Wagoneer 4 Dr.(1981-83)
18=Cherokee 4 Dr.(1981-83)	88=CJ-8, Scrambler(1981-86)	15=Grand Wagoneer 4 Dr.(1984-86)	75=Wagoneer 4WD-4 Dr.(1984-86)
77=Cherokee 4WD-2 Dr.(1984-86)			

BODY
CJ=CJ-5, CJ-6, CJ-7, CJ-8, Scrambler(1981-86)
MJ=Comanche Pickup(1986)

STYLES
SJ=Wagoneer(1981-83), Grand Wagoneer(1984-86), Cherokee(1981-83), J-10, J-20(1981-86)
XJ=Wagoneer(1984-86), Cherokee(1984-86)

AR = Use as Required - = Non Illustrated Part P.A.R. = Paint as Required

« RETURN TO GROUP INDEX

RADIATOR AND RELATED PARTS 1983-86 AMC FOUR CYLINDER CJ-7,8, SCRAMBLER
Figure 7-700

81J07 700

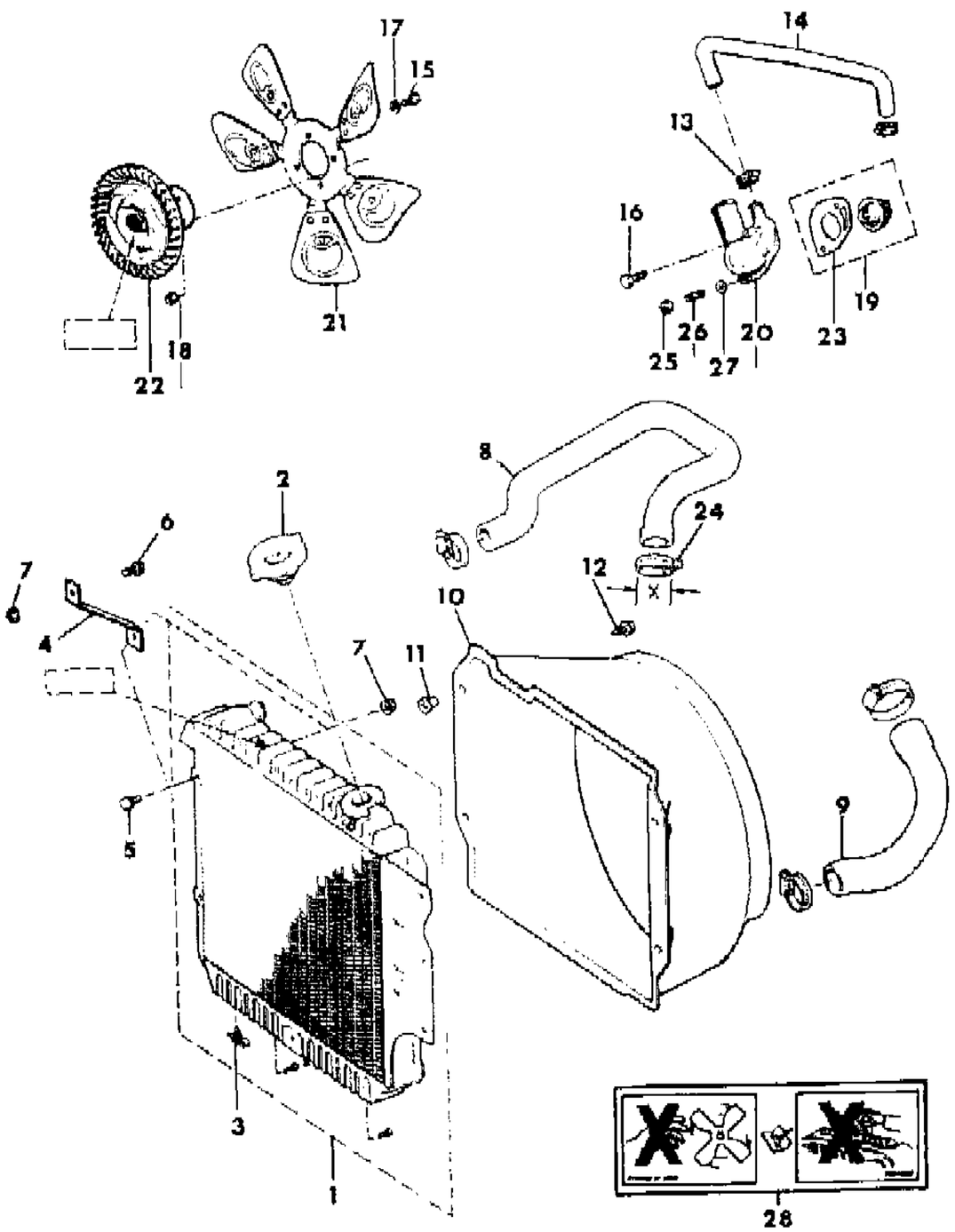

ITEM	PART NUMBER	QTY	BODY	MODEL	DESCRIPTION
1	J536 4658	1			RADIATOR
2					CAP
	J535 2954	1			Without Coolant Recovery System
	J535 8177	1			With Coolant Recovery System
3	J316 6547	1			DRAINCOCK
4	J536 1558	2			BRACKET
5	J400 4426	2			SCREW
6	S016 1895	2			SCREW
7	J044 5446	AR			NUT
8	J536 4659	1			HOSE, Inlet
9	J536 4660	1			HOSE, Outlet
10	J536 4661	1			SHROUD
11	J096 8072	AR			BUMPER
12					SCREW
	J400 5982	2			.25"
	J097 4764	2			.50"
13	J320 3076	2			CLAMP
14	5300 0418	1			HOSE
15	J018 0075	4			BOLT
16	J400 6951	1			BOLT
17	J012 0214	4			WASHER
18	J027 1184	4			NUT
19	8350 1426	1			THERMOSTAT PACKAGE, Engine Coolant
20	J323 5347	1			HOUSING, Thermostat
21	3300 1061	1			FAN, Cooling
22	J324 1857	1			DRIVE, Fan
23	J318 9874	1			GASKET
24					CLAMP
	J320 3078	AR			1.31" thru 2.25"
	J320 3079	AR			1.81" thru 2.75"
25	J400 6952	1			NUT
26	J400 6263	1			STUD
27	J012 0393	2			WASHER
28	J323 4806	1			LABEL, Fan

MODEL CODES

16=Cherokee 2 Dr.(1981-83)
17=Cherokee 2 Dr.(1981-83)
73=Cherokee 2WD-2 Dr.(1984-86)
74=Cherokee 2WD-4 Dr.(1984-86)
18=Cherokee 4 Dr.(1981-83)
77=Cherokee 4WD-2 Dr.(1984-86)
78=Cherokee 4WD-4 Dr.(1984-86)
85=CJ-5 (1981-83)
86=CJ-6(1981)
87=CJ-7(1981-86)
88=CJ-8, Scrambler(1981-86)
64=Comanche 2WD-6 Ft. Box(1986)
66=Comanche 2WD-7 Ft. Box(1986)
63=Comanche 4WD-6 Ft. Box(1986)
65=Comanche 4WD-7 Ft. Box(1986)
15=Grand Wagoneer 4 Dr.(1984-86)
25=J-10 Truck 7 Ft. Box(1981-84)
26=J10 Truck 8 Ft. Box(1981-86)
27=J-20 Truck 8 Ft. Box(1981-86)
15=Wagoneer 4 Dr.(1981-83)
75=Wagoneer 4WD-4 Dr.(1984-86)

BODY
CJ=CJ-5, CJ-6, CJ-7, CJ-8, Scrambler(1981-86)
MJ=Comanche Pickup(1986)

STYLES
SJ=Wagoneer(1981-83), Grand Wagoneer(1984-86), Cherokee(1981-83), J-10, J-20(1981-86)
XJ=Wagoneer(1984-86), Cherokee(1984-86)

AR = Use as Required - = Non Illustrated Part P.A.R. = Paint as Required

« RETURN TO GROUP INDEX

RADIATOR AND RELATED PARTS 1981-86 SIX CYLINDER CJ-5,6,7,8, SCRAMBLER
Figure 7-800

81J07 800

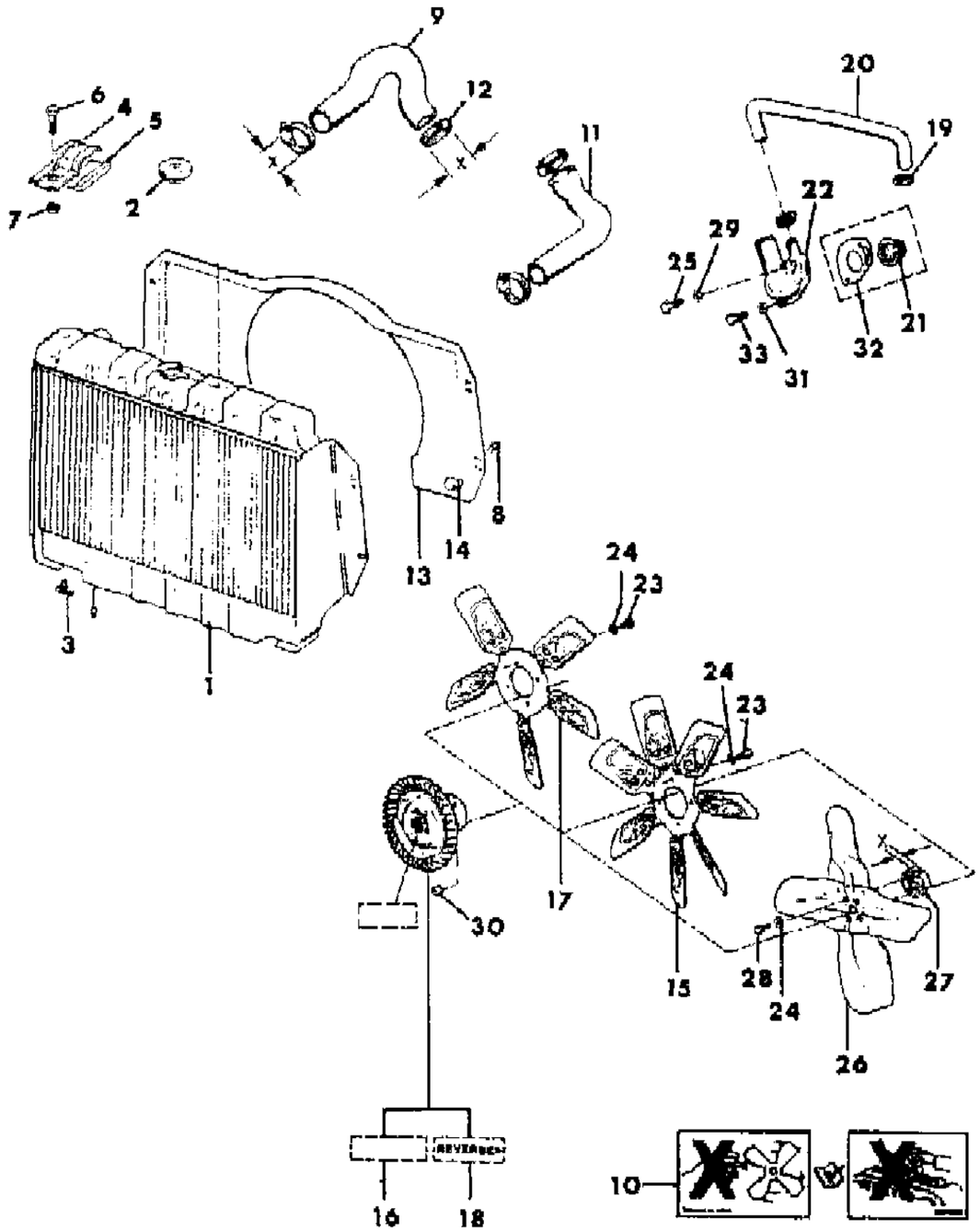

ITEM	PART NUMBER	QTY	BODY	MODEL	DESCRIPTION
1					RADIATOR
	J536 2165	1			Without Heavy Duty Cooling
	J536 2492	1			With Heavy Duty Cooling
2					CAP
					Without Coolant Recovery System
	J535 2954	1			1981-86
					With Coolant Recovery System
	J590 0584	1			1981
	J535 8177	1			1982-86
3	J535 9274	1			DRAINCOCK
4	J546 2315	1			BRACKET
5	J546 1551	1			PAD
6	S016 1895	2			BOLT
7	J044 5446	2			NUT
8	J400 3556	4			BOLT
9	J536 2697	1			HOSE, Inlet
10	J323 4806	1			LABEL, Fan
11					HOSE, Outlet
	J535 4380	1			Without Heavy Duty Cooling
	J536 2162	1			With Heavy Duty Cooling
12					CLAMP
	J320 3079	AR			1.81" to 2.75"
	J320 3078	AR			1.31" to 2.25"
13	J536 2539	1			SHROUD, With Heavy Duty Cooling
14	J400 4208	4			NUT
15					FAN, Cooling, With Heavy Duty Cooling, Without Serpentine Belt Drive
	J535 7390	1			Without Fan Drive
	J099 4277	1			With Fan Drive
16	J536 2170	1			DRIVE, Fan, With Heavy Duty Cooling, Without Serpentine Belt Drive
17	J536 2528	1			FAN, Cooling, With Serpentine Belt Drive, 7 Blade
18	J536 2520	1			DRIVE, Fan, With Serpentine Belt Drive
19	J320 3076	2			CLAMP
20	J320 3739	AR			HOSE, Bulk, 1 Foot
21	8350 1426	1			THERMOSTAT PACKAGE, Engine Coolant
22	J323 5347	1			HOUSING, Thermostat
23	J018 0075	4			BOLT
24	J012 0214	4			WASHER

MODEL CODES

16=Cherokee 2 Dr.(1981-83)
17=Cherokee 2 Dr.(1981-83)
73=Cherokee 2WD-2 Dr.(1984-86)
74=Cherokee 2WD-4 Dr.(1984-86)
18=Cherokee 4 Dr.(1981-83)
77=Cherokee 4WD-2 Dr.(1984-86)
78=Cherokee 4WD-4 Dr.(1984-86)
85=CJ-5 (1981-83)
86=CJ-6(1981)
87=CJ-7(1981-86)
88=CJ-8, Scrambler(1981-86)
64=Comanche 2WD-6 Ft. Box(1986)
66=Comanche 2WD-7 Ft. Box(1986)
63=Comanche 4WD-6 Ft. Box(1986)
65=Comanche 4WD-7 Ft. Box(1986)
15=Grand Wagoneer 4 Dr.(1984-86)
25=J-10 Truck 7 Ft. Box(1981-84)
26=J10 Truck 8 Ft. Box(1981-86)
27=J-20 Truck 8 Ft. Box(1981-86)
15=Wagoneer 4 Dr.(1981-83)
75=Wagoneer 4WD-4 Dr.(1984-86)

BODY
CJ=CJ-5, CJ-6, CJ-7, CJ-8, Scrambler(1981-86)
MJ=Comanche Pickup(1986)

STYLES
SJ=Wagoneer(1981-83), Grand Wagoneer(1984-86), Cherokee(1981-83), J-10, J-20(1981-86)
XJ=Wagoneer(1984-86), Cherokee(1984-86)

AR = Use as Required - = Non Illustrated Part P.A.R. = Paint as Required

RADIATOR AND RELATED PARTS 1981-86 SIX CYLINDER CJ-5,6,7,8, SCRAMBLER
Figure 7-800

81J07 800

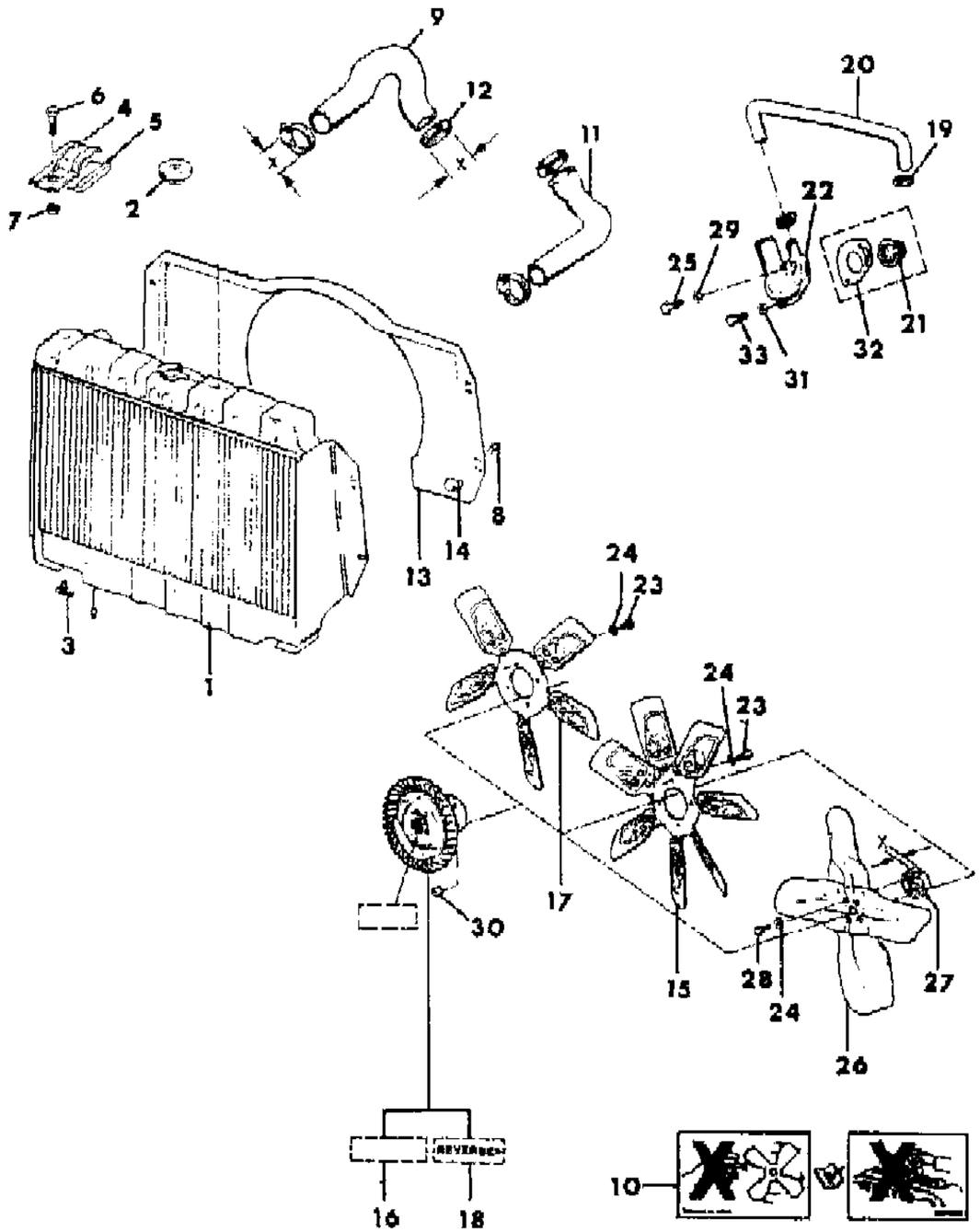

ITEM	PART NUMBER	QTY	BODY	MODEL	DESCRIPTION
25	J400 6951	1			BOLT
26	J322 4499	1			FAN, Cooling, Without Heavy Duty Cooling, Without Serpentine Belt Drive
27					SPACER, Without Serpentine Belt Drive
	J322 9710	1			Without Heavy Duty Cooling, .87"
	J319 3384	1			With Heavy Duty Cooling, 1.25"
28	S018 0618	4			BOLT
29	S012 0393	1			WASHER
30	J027 1184	4			NUT
31	J012 0393	2			WASHER
32	J318 9874	1			GASKET
33	J400 6985	1			BOLT

MODEL CODES

16=Cherokee 2 Dr.(1981-83)
17=Cherokee 2 Dr.(1981-83)
73=Cherokee 2WD-2 Dr.(1984-86)
74=Cherokee 2WD-4 Dr.(1984-86)
18=Cherokee 4 Dr.(1981-83)
77=Cherokee 4WD-2 Dr.(1984-86)
78=Cherokee 4WD-4 Dr.(1984-86)
85=CJ-5 (1981-83)
86=CJ-6(1981)
87=CJ-7(1981-86)
88=CJ-8, Scrambler(1981-86)
64=Comanche 2WD-6 Ft. Box(1986)
66=Comanche 2WD-7 Ft. Box(1986)
63=Comanche 4WD-6 Ft. Box(1986)
65=Comanche 4WD-7 Ft. Box(1986)
15=Grand Wagoneer 4 Dr.(1984-86)
25=J-10 Truck 7 Ft. Box(1981-84)
26=J10 Truck 8 Ft. Box(1981-86)
27=J-20 Truck 8 Ft. Box(1981-86)
15=Wagoneer 4 Dr.(1981-83)
75=Wagoneer 4WD-4 Dr.(1984-86)

BODY
CJ=CJ-5, CJ-6, CJ-7, CJ-8, Scrambler(1981-86)
MJ=Comanche Pickup(1986)

STYLES
SJ=Wagoneer(1981-83), Grand Wagoneer(1984-86), Cherokee(1981-83), J-10, J-20(1981-86)
XJ=Wagoneer(1984-86), Cherokee(1984-86)

AR = Use as Required - = Non Illustrated Part P.A.R. = Paint as Required

« RETURN TO GROUP INDEX

RADIATOR AND RELATED PARTS 1981 EIGHT CYLINDER CJ-5,6,7,8, SCRAMBLER
Figure 7-900

81J07 900

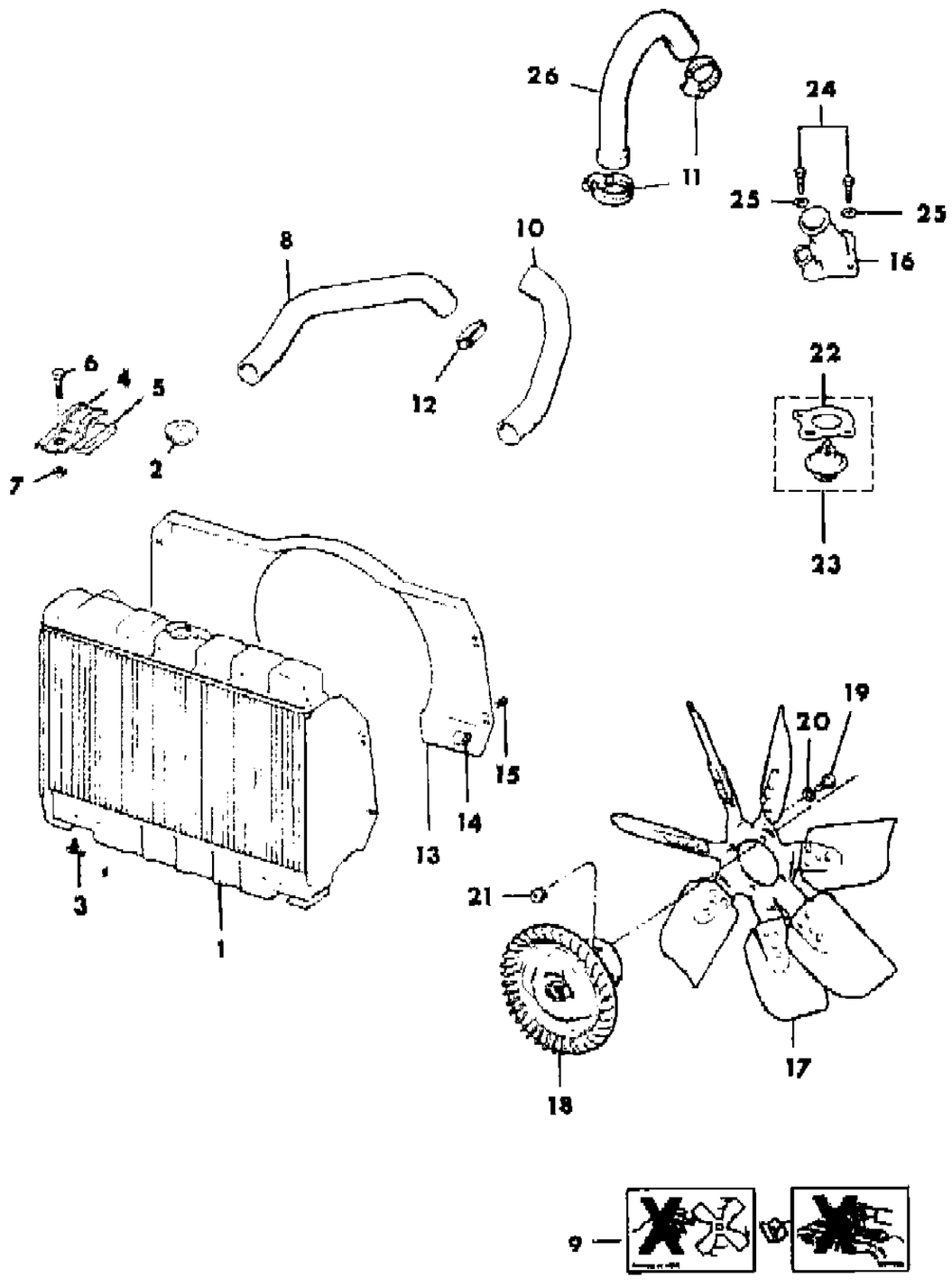

ITEM	PART NUMBER	QTY	BODY	MODEL	DESCRIPTION
1					RADIATOR
	J536 1578	1			Without Heavy Duty Cooling
	J536 1574	1			With Heavy Duty Cooling
2					CAP
	J535 2954	1			Without Coolant Recovery System
	J590 0584	1			With Coolant Recovery System
3	J535 9274	1			DRAINCOCK
4	J546 2315	1			BRACKET
5	J546 1551	1			PAD
6	S016 1895	2			BOLT
7	J044 5446	2			NUT
8	J099 9632	1			HOSE, Inlet
9	J323 4806	1			LABEL, Fan
10	J535 4528	1			HOSE, Outlet
11	J320 3077	2			CLAMP
12					CLAMP
	J320 3079	AR			1.81" to 2.75"
	J320 3078	AR			1.31" to 2.25"
13	J536 1349	1			SHROUD, With Heavy Duty Cooling
14	J400 4208	4			NUT
15	J400 3556	4			BOLT
16	J323 8509	1			HOUSING
17	J099 4277	1			FAN, Cooling
18	J536 2722	1			DRIVE, Fan
19	J018 0075	4			BOLT
20	J012 0214	4			WASHER, Lock
21	J027 1184	4			NUT
22	J318 7543	1			GASKET
23	J812 7383	1			THERMOSTAT PACKAGE, Engine Coolant
24	J018 0079	2			BOLT
25	J012 0393	2			WASHER
26	J318 2494	1			HOSE

MODEL CODES

16=Cherokee 2 Dr.(1981-83)
17=Cherokee 2 Dr.(1981-83)
73=Cherokee 2WD-2 Dr.(1984-86)
74=Cherokee 2WD-4 Dr.(1984-86)
18=Cherokee 4 Dr.(1981-83)
77=Cherokee 4WD-2 Dr.(1984-86)
78=Cherokee 4WD-4 Dr.(1984-86)
85=CJ-5 (1981-83)
86=CJ-6(1981)
87=CJ-7(1981-86)
88=CJ-8, Scrambler(1981-86)
64=Comanche 2WD-6 Ft. Box(1986)
66=Comanche 2WD-7 Ft. Box(1986)
63=Comanche 4WD-6 Ft. Box(1986)
65=Comanche 4WD-7 Ft. Box(1986)
15=Grand Wagoneer 4 Dr.(1984-86)
25=J-10 Truck 7 Ft. Box(1981-84)
26=J10 Truck 8 Ft. Box(1981-86)
27=J-20 Truck 8 Ft. Box(1981-86)
15=Wagoneer 4 Dr.(1981-83)
75=Wagoneer 4WD-4 Dr.(1984-86)

BODY
CJ=CJ-5, CJ-6, CJ-7, CJ-8, Scrambler(1981-86)
MJ=Comanche Pickup(1986)

STYLES
SJ=Wagoneer(1981-83), Grand Wagoneer(1984-86), Cherokee(1981-83), J-10, J-20(1981-86)
XJ=Wagoneer(1984-86), Cherokee(1984-86)

AR = Use as Required - = Non Illustrated Part P.A.R. = Paint as Required

« RETURN TO GROUP INDEX

RADIATOR AND RELATED PARTS 1985-86 RENAULT DIESEL, EXPORT XJ CHEROKEE, XJ WAGONEER, COMANCHE
Figure 7-1000

81J07 1000

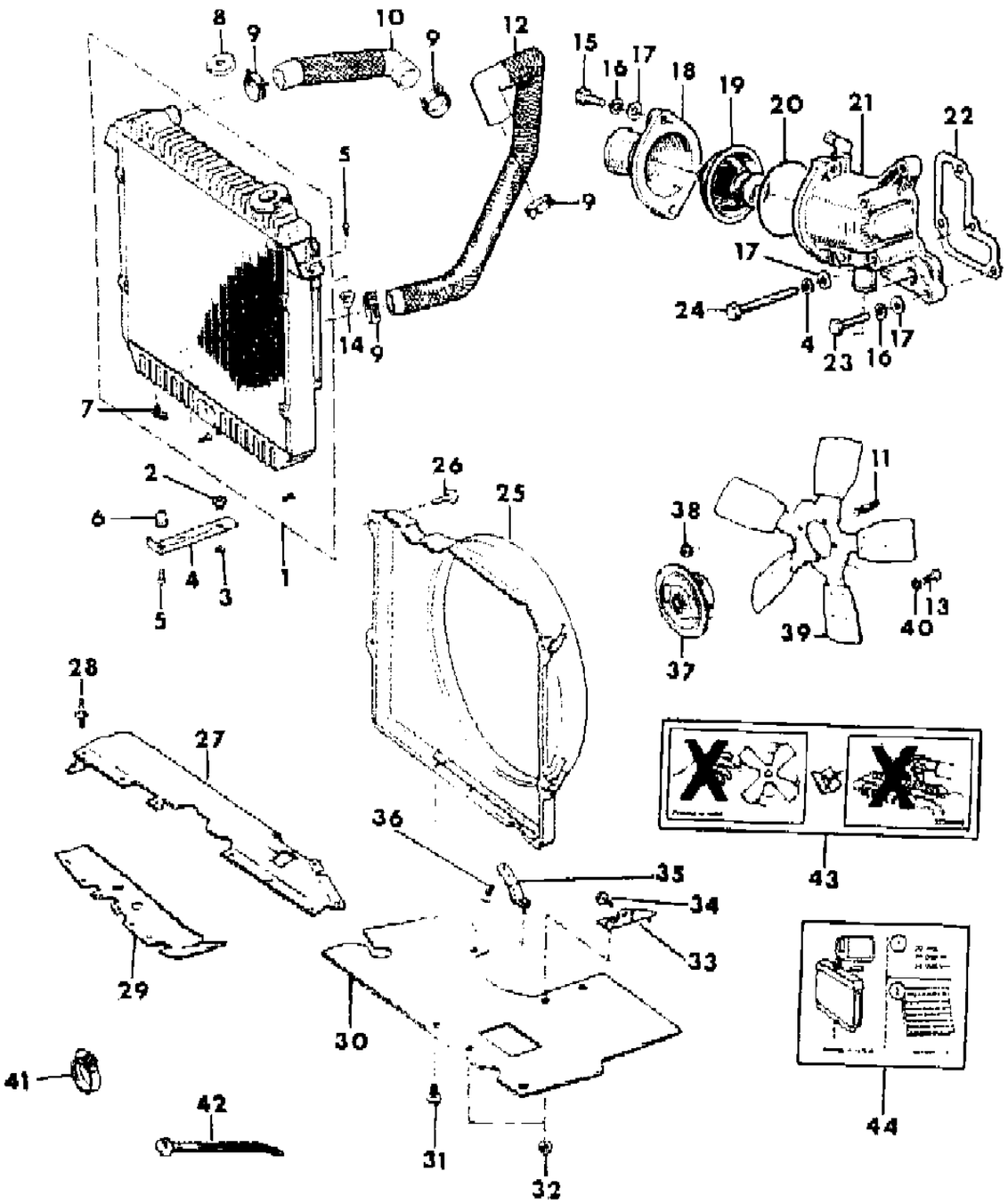

ITEM	PART NUMBER	QTY	BODY	MODEL	DESCRIPTION
1	5300 1174	1			RADIATOR
2	5300 0511	1			GROMMET
3	3420 1494	1			RING, Retaining
4	5300 0510	1			BRACE, Radiator
5	1150 2628	3			BOLT
6	3420 1493	1			NUT
7	J316 6547	1			DRAINCOCK
8	J536 4692	1			CAP, Radiator
9	3200 2255	AR			CLAMP
10	5200 2182	1			HOSE
11	3420 2197	4			STUD
12	5200 2177	1			HOSE
13	J045 4895	4			BOLT
14	3420 1348	2			NUT
15	T300 1634	2			BOLT
16	T305 5031	AR			WASHER
17	T305 3074	AR			WASHER
18	T065 6732	1			OUTLET, Thermostat ***
19	T069 7157	1			THERMOSTAT, Engine Coolant
20	T024 5057	1			GASKET
21	T072 7361	1			HOUSING, Thermostat
22	T134 8932	1			GASKET
23	T300 1614	1			BOLT
24	T300 1238	3			BOLT
25	5300 1745	1			SHROUD, Fan
26	J318 9013	4			SCREW
27	5500 3056	1			SEAL
28	3420 1621	14			RIVET
29	5500 3057	1			SEAL
30	5200 1858	1			SHIELD, Engine Splash
31	J400 5813	3			NUT
32	1150 2702	5			NUT
33	5300 2543	1			BRACKET, Splash Shield, Left
34	3420 1540	2			BOLT
35	5300 2544	1			BRACKET, Splash Shield, Right
36	3420 1912	2			SCREW
37	5300 1168	1			DRIVE, Fan
38	3420 1658	4			NUT, Lock
39	5300 1706	1			FAN, Cooling

MODEL CODES
16=Cherokee 2 Dr.(1981-83)
17=Cherokee 2 Dr.(1981-83)
73=Cherokee 2WD-2 Dr.(1984-86)
74=Cherokee 2WD-4 Dr.(1984-86)
18=Cherokee 4 Dr.(1981-83)
77=Cherokee 4WD-2 Dr.(1984-86)
78=Cherokee 4WD-4 Dr.(1984-86)
85=CJ-5 (1981-83)
86=CJ-6(1981)
87=CJ-7(1981-86)
88=CJ-8, Scrambler(1981-86)
64=Comanche 2WD-6 Ft. Box(1986)
66=Comanche 2WD-7 Ft. Box(1986)
63=Comanche 4WD-6 Ft. Box(1986)
65=Comanche 4WD-7 Ft. Box(1986)
15=Grand Wagoneer 4 Dr.(1984-86)
25=J-10 Truck 7 Ft. Box(1981-84)
26=J10 Truck 8 Ft. Box(1981-86)
27=J-20 Truck 8 Ft. Box(1981-86)
15=Wagoneer 4 Dr.(1981-83)
75=Wagoneer 4WD-4 Dr.(1984-86)

BODY
CJ=CJ-5, CJ-6, CJ-7, CJ-8, Scrambler(1981-86)
MJ=Comanche Pickup(1986)

STYLES
SJ=Wagoneer(1981-83), Grand Wagoneer(1984-86), Cherokee(1981-83), J-10, J-20(1981-86)
XJ=Wagoneer(1984-86), Cherokee(1984-86)

AR = Use as Required - = Non Illustrated Part P.A.R. = Paint as Required

« RETURN TO GROUP INDEX »

RADIATOR AND RELATED PARTS 1985-86 RENAULT DIESEL, EXPORT XJ CHEROKEE, XJ WAGONEER, COMANCHE
Figure 7-1000

81J07 1000

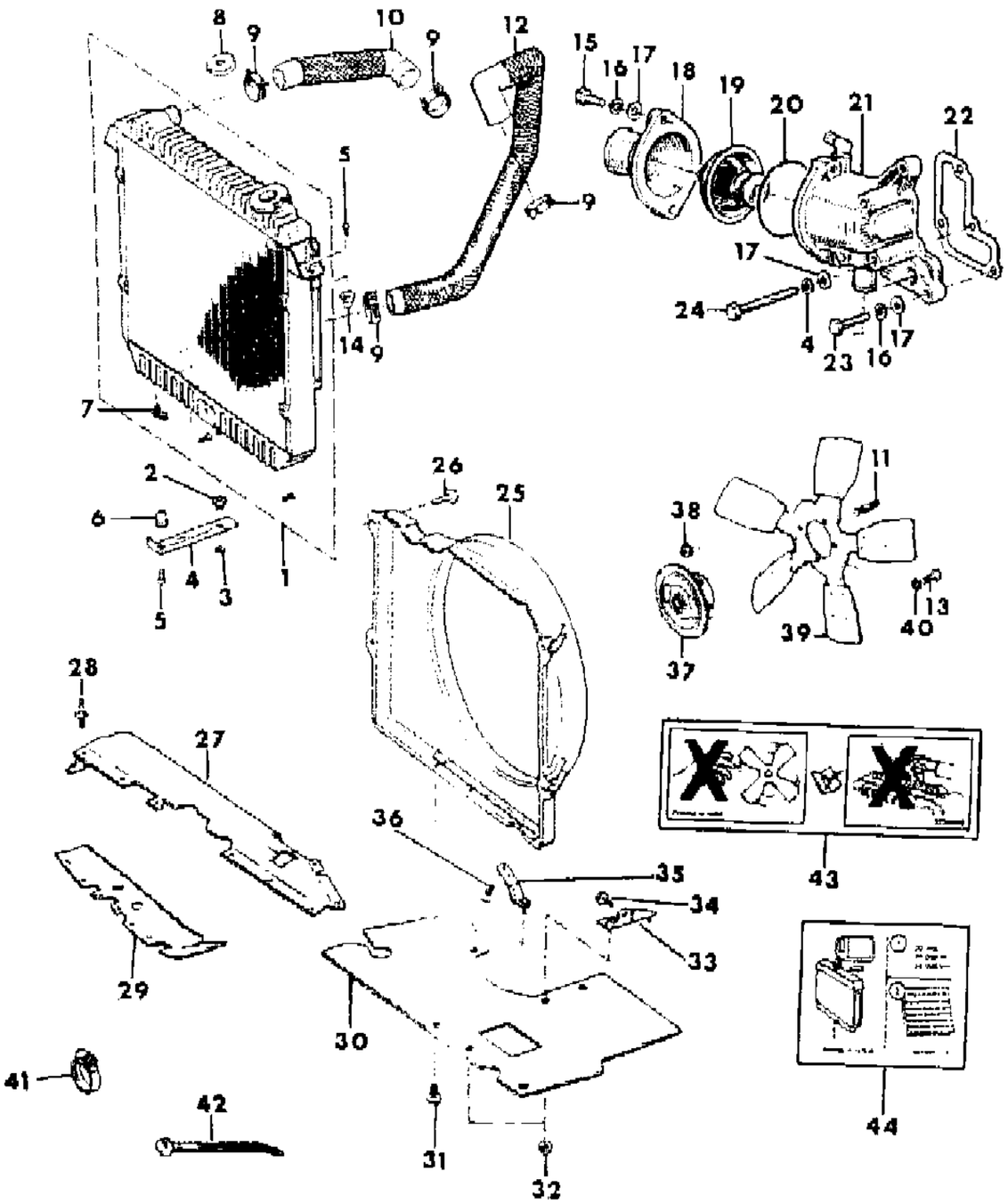

ITEM	PART NUMBER	QTY	BODY	MODEL	DESCRIPTION
40	J012 0214	4			WASHER, Lock
41					CLAMP
	3300 0785	AR			12mm Thru 20mm
	3300 0784	AR			17mm Thru 25mm
	J320 3076	AR			14mm Thru 27mm
	J320 3077	AR			21mm Thru 44mm
	J320 3078	AR			33mm Thru 57mm
42					STRAP, Plastic Tie
	J322 3227	AR			200mm
	J369 3058	AR			300mm
	J323 0270	AR			350mm
	J323 5187	AR			450mm
43	J323 4806	1			LABEL, Fan
44	3300 1114	1			LABEL, Radiator

MODEL CODES

16=Cherokee 2 Dr.(1981-83)
17=Cherokee 2 Dr.(1981-83)
73=Cherokee 2WD-2 Dr.(1984-86)
74=Cherokee 2WD-4 Dr.(1984-86)
18=Cherokee 4 Dr.(1981-83)
77=Cherokee 4WD-2 Dr.(1984-86)
78=Cherokee 4WD-4 Dr.(1984-86)
85=CJ-5 (1981-83)
86=CJ-6(1981)
87=CJ-7(1981-86)
88=CJ-8, Scrambler(1981-86)
64=Comanche 2WD-6 Ft. Box(1986)
66=Comanche 2WD-7 Ft. Box(1986)
63=Comanche 4WD-6 Ft. Box(1986)
65=Comanche 4WD-7 Ft. Box(1986)
15=Grand Wagoneer 4 Dr.(1984-86)
25=J-10 Truck 7 Ft. Box(1981-84)
26=J10 Truck 8 Ft. Box(1981-86)
27=J-20 Truck 8 Ft. Box(1981-86)
15=Wagoneer 4 Dr.(1981-83)
75=Wagoneer 4WD-4 Dr.(1984-86)

BODY
CJ=CJ-5, CJ-6, CJ-7, CJ-8, Scrambler(1981-86)
MJ=Comanche Pickup(1986)

STYLES
SJ=Wagoneer(1981-83), Grand Wagoneer(1984-86), Cherokee(1981-83), J-10, J-20(1981-86)
XJ=Wagoneer(1984-86), Cherokee(1984-86)

AR = Use as Required - = Non Illustrated Part P.A.R. = Paint as Required

« RETURN TO GROUP INDEX

RADIATOR AND RELATED PARTS 1984-86 FOUR CYLINDER GAS XJ CHEROKEE, XJ WAGONEER, COMANCHE
Figure 7-1100

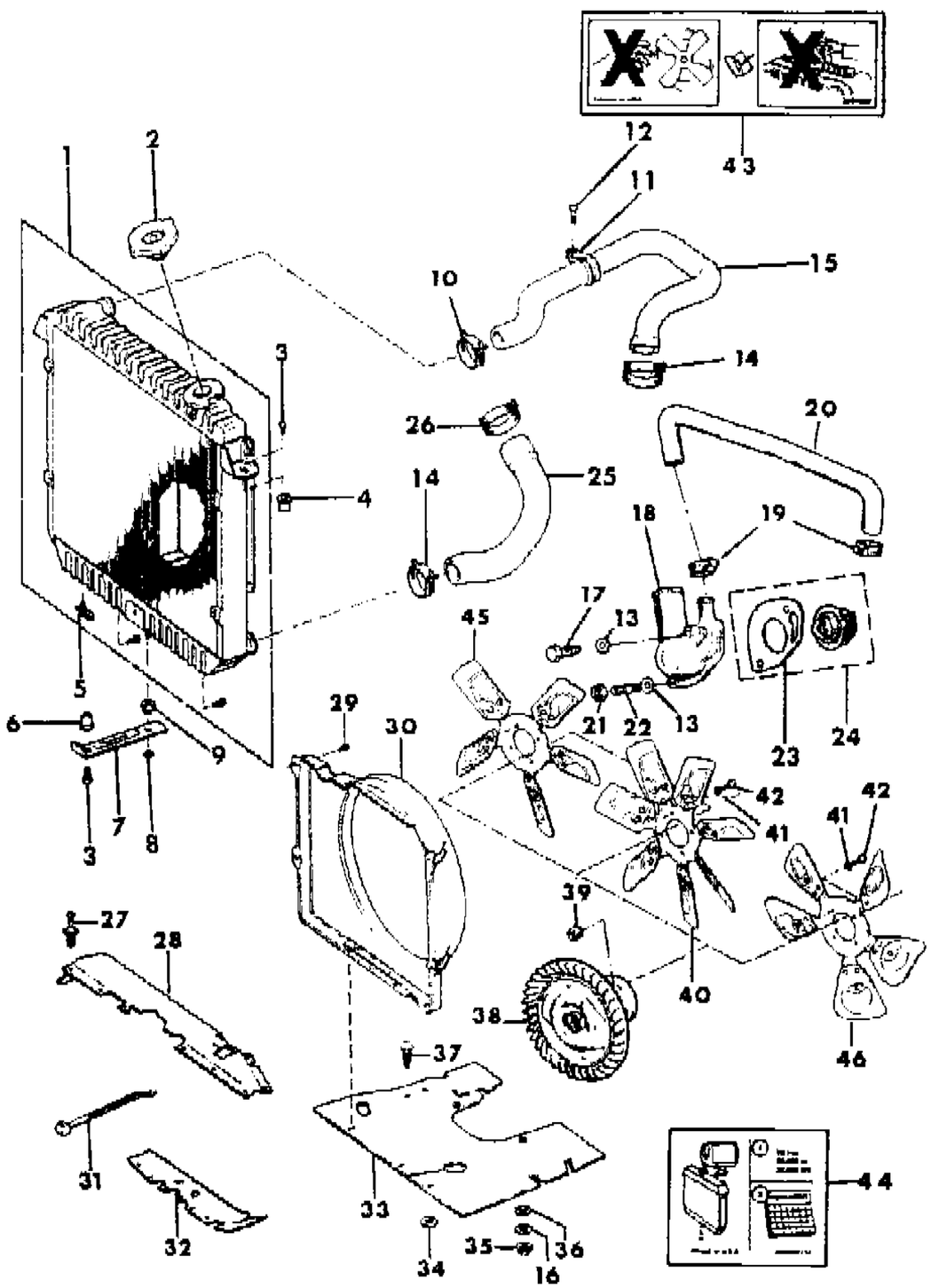

ITEM	PART NUMBER	QTY	BODY	MODEL	DESCRIPTION
1					RADIATOR, Standard Duty
					With Manual Transmission
	5300 0002	1			Stamped 53000001
	5300 0002	1			Stamped 53000514
					With Automatic Transmission
	5300 0002	1			Stamped 53000002
	5300 0002	1			Stamped 53000515
					RADIATOR, Heavy Duty
	5300 0521	1			Stamped 53000003
	5300 0521	1			Stamped 53000516
2	J323 9375	1			CAP, Radiator
3	1150 2628	3			BOLT
4	3420 1348	2			NUT
5	J316 6547	1			DRAINCOCK
6	3420 1493	1			NUT
7	5300 0510	1			BRACE, Radiator
8	3420 1494	1			RING
9	5300 0511	1			GROMMET
10	3200 2983	3			CLAMP
11	J012 5931	1			CLIP
12	1150 0985	1			SCREW
13	J012 0393	2			WASHER
14	3200 2255	2			CLAMP
15					HOSE
	5300 1439	1			With Factory Installed Air Conditioning, With Dealer Installed
					American Air Conditioning
	5300 0471	1			Without Air Conditioning
16	J044 6188	2			WASHER
17	J400 6951	1			BOLT
18	J323 5347	1			HOUSING, Thermostat
19	J320 3076	2			CLAMP
20					HOSE
	3300 2508	1			Fuel Injected Engine
	J324 1955	1			Carburated Engine
21	J400 6952	1			NUT
22	J400 6263	1			STUD
23	J318 9874	1			GASKET
24	8350 1426	1			THERMOSTAT PACKAGE, Engine Coolant
25	5300 0012	1			HOSE

MODEL CODES

16=Cherokee 2 Dr.(1981-83)
17=Cherokee 2 Dr.(1981-83)
73=Cherokee 2WD-2 Dr.(1984-86)
74=Cherokee 2WD-4 Dr.(1984-86)
18=Cherokee 4 Dr.(1981-83)
77=Cherokee 4WD-2 Dr.(1984-86)
78=Cherokee 4WD-4 Dr.(1984-86)
85=CJ-5 (1981-83)
86=CJ-6(1981)
87=CJ-7(1981-86)
88=CJ-8, Scrambler(1981-86)
64=Comanche 2WD-6 Ft. Box(1986)
66=Comanche 2WD-7 Ft. Box(1986)
63=Comanche 4WD-6 Ft. Box(1986)
65=Comanche 4WD-7 Ft. Box(1986)
15=Grand Wagoneer 4 Dr.(1984-86)
25=J-10 Truck 7 Ft. Box(1981-84)
26=J10 Truck 8 Ft. Box(1981-86)
27=J-20 Truck 8 Ft. Box(1981-86)
15=Wagoneer 4 Dr.(1981-83)
75=Wagoneer 4WD-4 Dr.(1984-86)

BODY
CJ=CJ-5, CJ-6, CJ-7, CJ-8, Scrambler(1981-86)
MJ=Comanche Pickup(1986)

STYLES
SJ=Wagoneer(1981-83), Grand Wagoneer(1984-86), Cherokee(1981-83), J-10, J-20(1981-86)
XJ=Wagoneer(1984-86), Cherokee(1984-86)

AR = Use as Required - = Non Illustrated Part P.A.R. = Paint as Required

« RETURN TO GROUP INDEX »

RADIATOR AND RELATED PARTS 1984-86 FOUR CYLINDER GAS XJ CHEROKEE, XJ WAGONEER, COMANCHE
Figure 7-1100

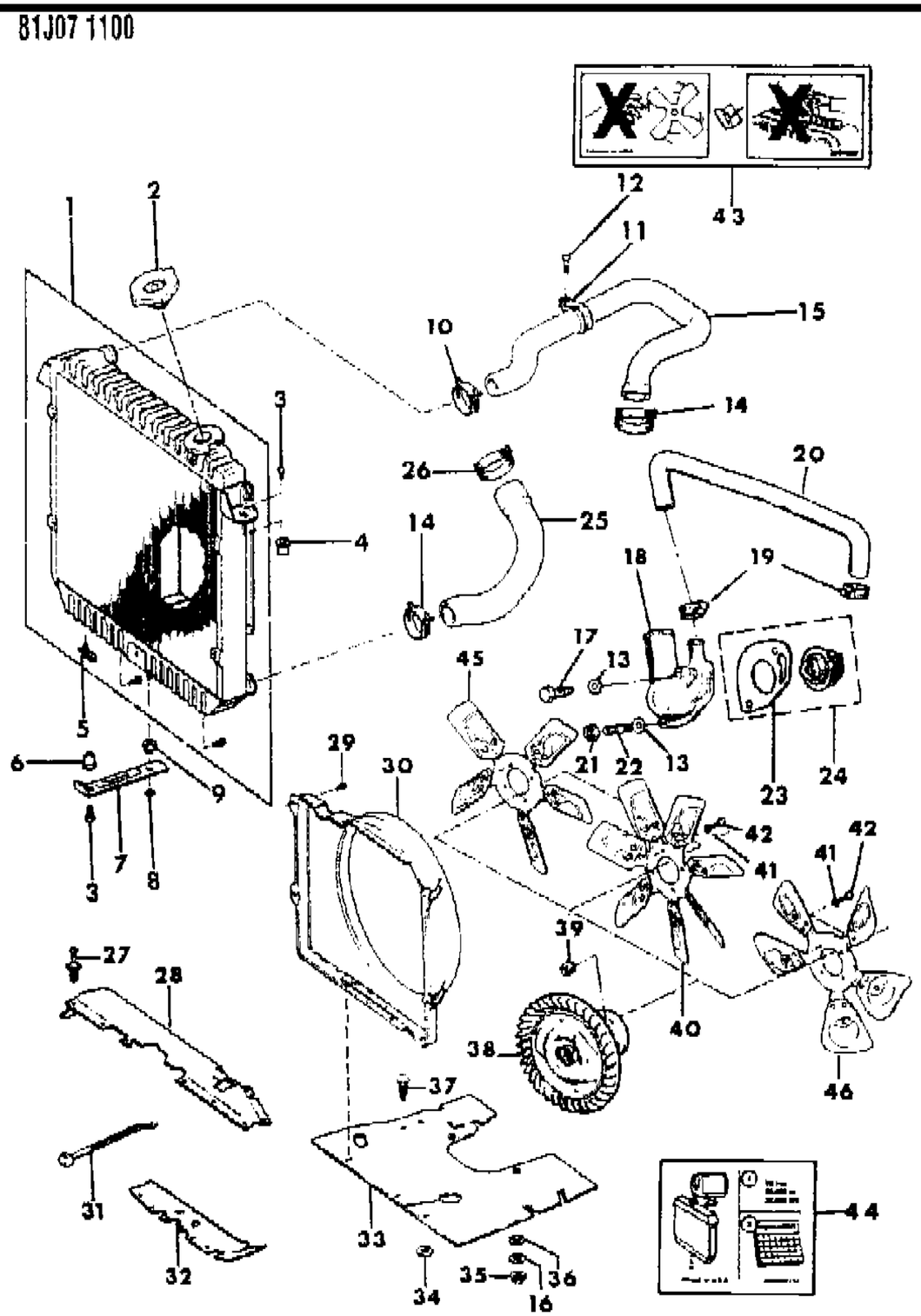

ITEM	PART NUMBER	QTY	BODY	MODEL	DESCRIPTION
26	3200 2366	1			CLAMP
27	3420 1621	14			RIVET, Heavy Duty
28					SEAL, Radiator
	5300 3056	1			Heavy Duty, Without Dealer Installed American Air Conditioning
	8350 1912	1			With Dealer Installed American Air Conditioning
29	J318 9013	1			SCREW
30	5300 1699	1			SHROUD, Fan
31	J322 3227	AR			STRAP, Plastic Tie
32	5500 3057	1			SEAL, Radiator, Heavy Duty
33	5200 1270	1			SHIELD, Engine Splash
34	J400 6220	3			NUT, Push
35	J400 4587	2			NUT
36	J400 0271	2			NUT
37					FASTENER
	3420 2787	2			1.12"
	J400 4919	3			0.80"
38					DRIVE, Fan
	J324 1857	1			Without Serpentine Belt Drive
	J324 1858	1			With Serpentine Belt Drive
39	J027 1184	4			NUT
40	5300 1414	1			FAN, Cooling, With Serpentine Belt Drive
41	J012 0214	AR			WASHER
42	J018 0075	4			BOLT
43	J323 4806	1			LABEL, Fan
44	3200 1114	1			LABEL, Radiator
45	5300 0699	1			FAN, Cooling, With Serpentine Belt Drive
46	5300 1660	1			FAN, Cooling, Without Serpentine Belt Drive

MODEL CODES

16=Cherokee 2 Dr.(1981-83)
17=Cherokee 2 Dr.(1981-83)
73=Cherokee 2WD-2 Dr.(1984-86)
74=Cherokee 2WD-4 Dr.(1984-86)
18=Cherokee 4 Dr.(1981-83)
77=Cherokee 4WD-2 Dr.(1984-86)
78=Cherokee 4WD-4 Dr.(1984-86)
85=CJ-5 (1981-83)
86=CJ-6(1981)
87=CJ-7(1981-86)
88=CJ-8, Scrambler(1981-86)
64=Comanche 2WD-6 Ft. Box(1986)
66=Comanche 2WD-7 Ft. Box(1986)
63=Comanche 4WD-6 Ft. Box(1986)
65=Comanche 4WD-7 Ft. Box(1986)
15=Grand Wagoneer 4 Dr.(1984-86)
25=J-10 Truck 7 Ft. Box(1981-84)
26=J10 Truck 8 Ft. Box(1981-86)
27=J-20 Truck 8 Ft. Box(1981-86)
15=Wagoneer 4 Dr.(1981-83)
75=Wagoneer 4WD-4 Dr.(1984-86)

BODY
CJ=CJ-5, CJ-6, CJ-7, CJ-8, Scrambler(1981-86)
MJ=Comanche Pickup(1986)

STYLES
SJ=Wagoneer(1981-83), Grand Wagoneer(1984-86), Cherokee(1981-83), J-10, J-20(1981-86)
XJ=Wagoneer(1984-86), Cherokee(1984-86)

AR = Use as Required - = Non Illustrated Part P.A.R. = Paint as Required

« RETURN TO GROUP INDEX

RADIATOR AND RELATED PARTS 1984-86 SIX CYLINDER XJ CHEROKEE, XJ WAGONEER, COMANCHE
Figure 7-1200

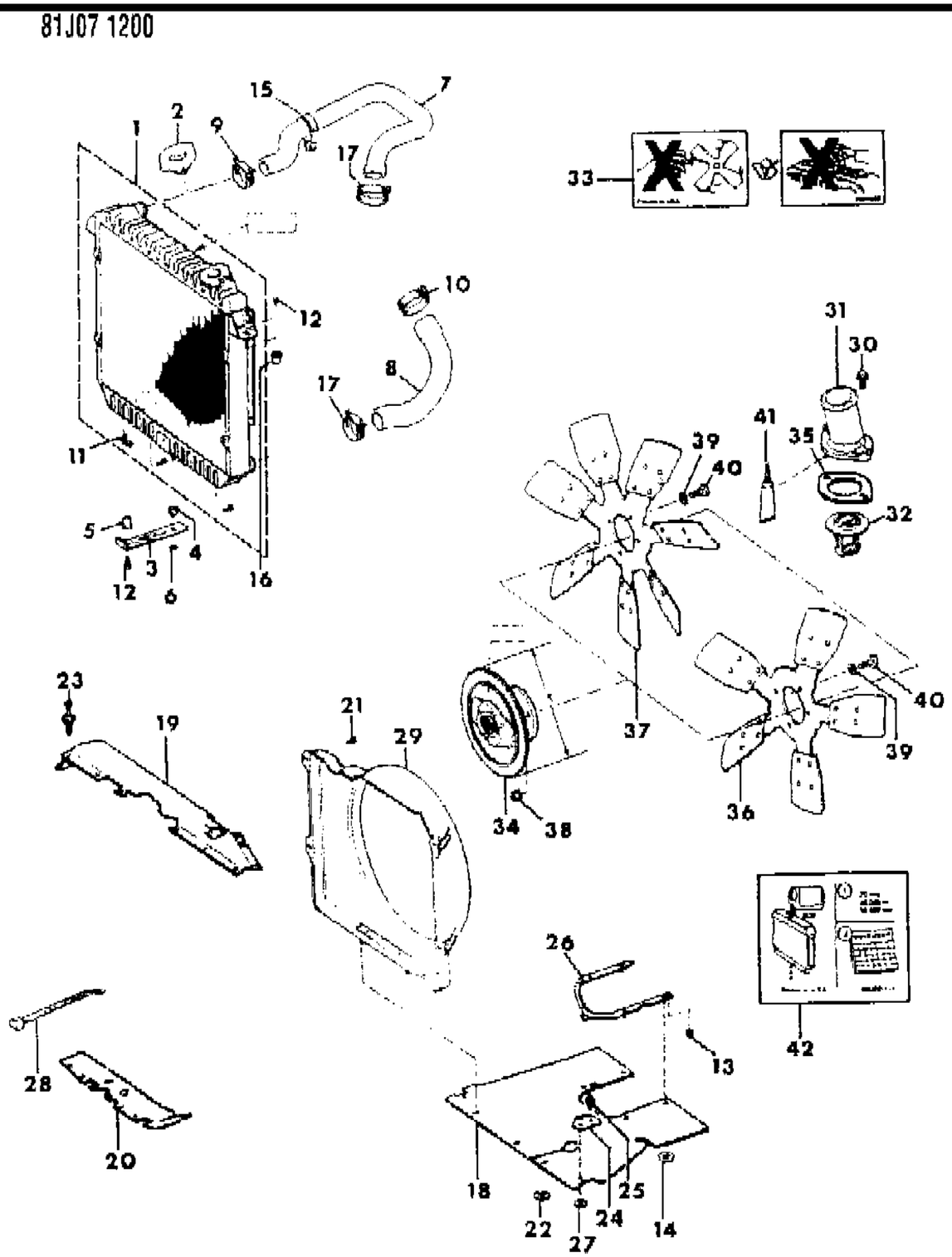

ITEM	PART NUMBER	QTY	BODY	MODEL	DESCRIPTION
1					RADIATOR, Standard Duty
					With Manual Transmission
	5300 0006	1			Stamped 53000005
	5300 0006	1			Stamped 53000517
					With Automatic Transmission
	5300 0006	1			Stamped 53000006
	5300 0006	1			Stamped 53000518
					RADIATOR, Heavy Duty
	5300 0521	1			Stamped 53000519
	5530 0521	1			Stamped 53001520
	5300 0521	1			Stamped 53003521
	5300 1666	1			Stamped 53003666
2	J323 9375	1			CAP, Radiator
3	5300 0510	1			BRACE, Radiator
4	5300 0511	1			GROMMET
5	3420 1493	1			NUT
6	3420 1494	1			RING
7					HOSE
	5300 0013	1			With Factory Installed Air Conditioning, With Dealer Installed American Air Conditioning
	5300 0509	1			Without Air Conditioning
8	5300 0014	1			HOSE
9	3200 2983	3			CLAMP
10	J320 3078	1			CLAMP
11	J316 6547	1			DRAINCOCK
12	1150 2628	3			BOLT
13	1150 3745	3			NUT
14	J400 6220	4			NUT, Push
15	5300 1621	1			CLIP
16	3420 1348	2			NUT
17	3200 2255	2			CLAMP
18	5200 1280	1			SHIELD, Engine Splash
19					SEAL, Radiator
	5500 3056	1			With Heavy Duty, Without Dealer Installed American Air Conditioning ***
	8350 1912	1			With Dealer Installed American Air Conditioning
20	5500 3057	1			SEAL, Radiator, Heavy Duty
21	J318 9013	4			SCREW
22	J400 6220	3			NUT, Push

MODEL CODES

16=Cherokee 2 Dr.(1981-83)	78=Cherokee 4WD-4 Dr.(1984-86)	64=Comanche 2WD-6 Ft. Box(1986)	25=J-10 Truck 7 Ft. Box(1981-84)
17=Cherokee 2 Dr.(1981-83)	85=CJ-5 (1981-83)	66=Comanche 2WD-7 Ft. Box(1986)	26=J10 Truck 8 Ft. Box(1981-86)
73=Cherokee 2WD-2 Dr.(1984-86)	86=CJ-6(1981)	63=Comanche 4WD-6 Ft. Box(1986)	27=J-20 Truck 8 Ft. Box(1981-86)
74=Cherokee 2WD-4 Dr.(1984-86)	87=CJ-7(1981-86)	65=Comanche 4WD-7 Ft. Box(1986)	15=Wagoneer 4 Dr.(1981-83)
18=Cherokee 4 Dr.(1981-83)	88=CJ-8, Scrambler(1981-86)	15=Grand Wagoneer 4 Dr.(1984-86)	75=Wagoneer 4WD-4 Dr.(1984-86)
77=Cherokee 4WD-2 Dr.(1984-86)			

BODY
CJ=CJ-5, CJ-6, CJ-7, CJ-8, Scrambler(1981-86)
MJ=Comanche Pickup(1986)

STYLES
SJ=Wagoneer(1981-83), Grand Wagoneer(1984-86), Cherokee(1981-83), J-10, J-20(1981-86)
XJ=Wagoneer(1984-86), Cherokee(1984-86)

AR = Use as Required - = Non Illustrated Part P.A.R. = Paint as Required

RADIATOR AND RELATED PARTS 1984-86 SIX CYLINDER XJ CHEROKEE, XJ WAGONEER, COMANCHE
Figure 7-1200

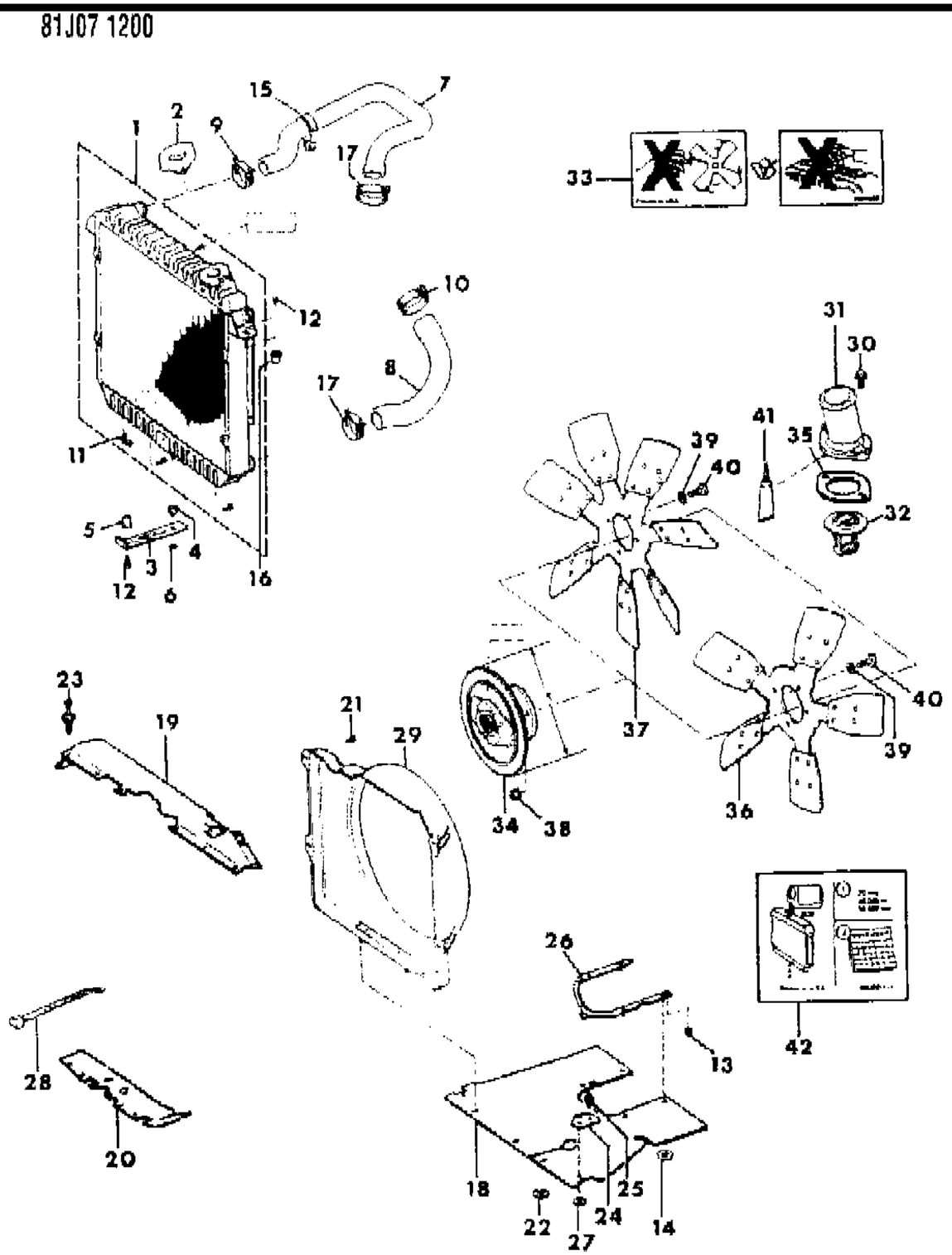

ITEM	PART NUMBER	QTY	BODY	MODEL	DESCRIPTION
23	3420 1621	14			RIVET, Heavy Duty
24	5200 1278	2			PLATE
25	3420 1321	4			BOLT
26	5200 1276	1			SUPPORT
27	1150 3736	2			NUT, Push
28	J322 3227	AR			STRAP, Tie
29	5300 1698	1			SHROUD, Fan
30	8350 0810	21			BOLT
31	8350 0812	1			HOUSING, Thermostat
32	8350 0813	1			THERMOSTAT, Engine Coolant
33	J323 4806	1			LABEL, Fan
34					DRIVE, Fan
	5300 1693	1			Stamped 8953001693, (184mm)
	J324 1856	1			Stamped 3241856, (152mm)
35	8350 0855	1			GASKET
36	5300 1660	1			FAN, Cooling, Without Air Conditioning
37	5300 1415	1			Fan, Cooling, With Air Conditioning ***
38	3420 1658	4			NUT
39	J012 0214	4			WASHER
40	J045 4895	4			BOLT
41	4318 025	1			SEALER ***
42	3200 1114	1			LABEL, Radiator

MODEL CODES

16=Cherokee 2 Dr.(1981-83)
17=Cherokee 2 Dr.(1981-83)
73=Cherokee 2WD-2 Dr.(1984-86)
74=Cherokee 2WD-4 Dr.(1984-86)
18=Cherokee 4 Dr.(1981-83)
77=Cherokee 4WD-2 Dr.(1984-86)
78=Cherokee 4WD-4 Dr.(1984-86)
85=CJ-5 (1981-83)
86=CJ-6(1981)
87=CJ-7(1981-86)
88=CJ-8, Scrambler(1981-86)
64=Comanche 2WD-6 Ft. Box(1986)
66=Comanche 2WD-7 Ft. Box(1986)
63=Comanche 4WD-6 Ft. Box(1986)
65=Comanche 4WD-7 Ft. Box(1986)
15=Grand Wagoneer 4 Dr.(1984-86)
25=J-10 Truck 7 Ft. Box(1981-84)
26=J10 Truck 8 Ft. Box(1981-86)
27=J-20 Truck 8 Ft. Box(1981-86)
15=Wagoneer 4 Dr.(1981-83)
75=Wagoneer 4WD-4 Dr.(1984-86)

BODY
CJ=CJ-5, CJ-6, CJ-7, CJ-8, Scrambler(1981-86)
MJ=Comanche Pickup(1986)

STYLES
SJ=Wagoneer(1981-83), Grand Wagoneer(1984-86), Cherokee(1981-83), J-10, J-20(1981-86)
XJ=Wagoneer(1984-86), Cherokee(1984-86)

AR = Use as Required - = Non Illustrated Part P.A.R. = Paint as Required

« RETURN TO GROUP INDEX

RADIATOR AND RELATED PARTS 1981-86 SIX CYLINDER SJ CHEROKEE, SJ WAGONEER, J10
Figure 7-1300

81J07 1300

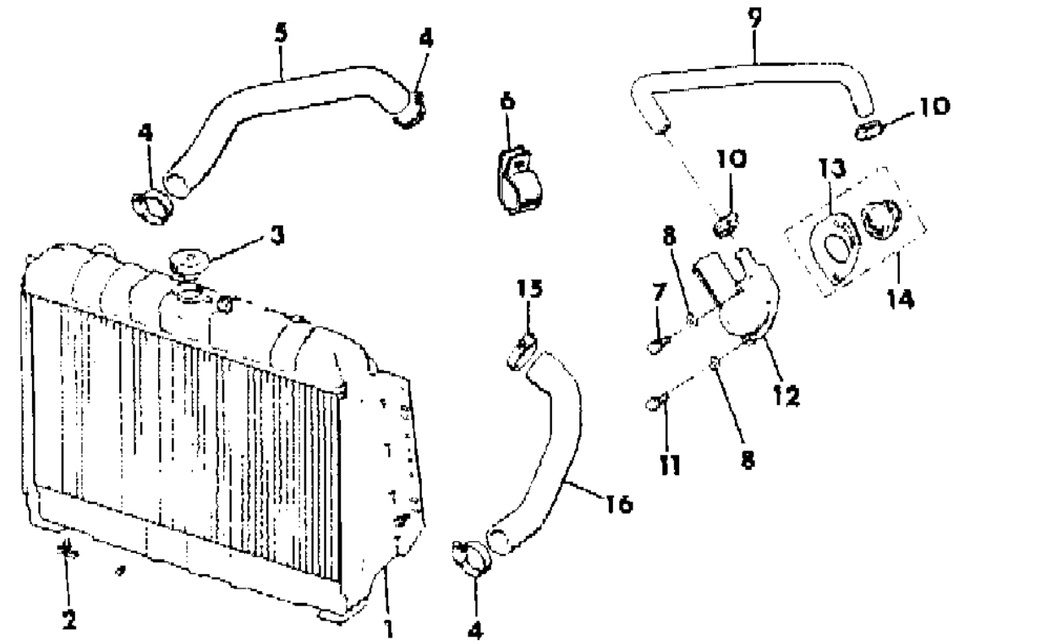

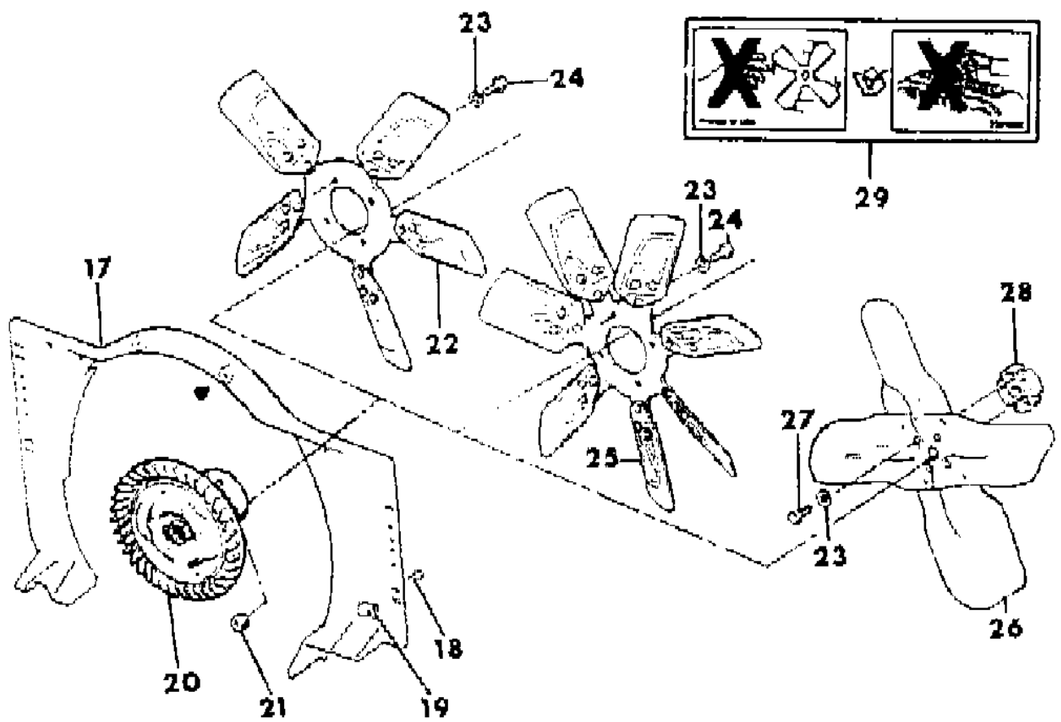

ITEM	PART NUMBER	QTY	BODY	MODEL	DESCRIPTION
1					RADIATOR, With Manual Transmission
	J536 1456	1			Standard Duty, Stamped 5361456
	J536 1576	1			Heavy Duty, Stamped 5361576
2	J535 9274	1			DRAINCOCK
3					CAP, Radiator
	J535 2954	1			Without Heavy Duty Cooling
					With Heavy Duty Cooling
	J590 0584	1			1981
	J535 8177	1			1982-86
4	J320 3078	3			CLAMP
5	J536 2698	1			HOSE
6	J012 0524	2			CLIP
7	J400 6951	1			BOLT
8	J012 0393	2			WASHER
9					HOSE
	J372 8191	1			49 States
	J324 0601	1			California
10	J320 3076	2			CLAMP
11	J400 6985	1			BOLT
12	J323 5347	1			HOUSING, Thermostat
13	J318 9874	1			GASKET
14					THERMOSTAT PACKAGE, Engine Coolant
	J812 7383	1			1981-82
	8350 0360	1			1983-86
15	J320 3079	1			CLAMP
16	J585 4405	1			HOSE
17	J535 9100	1			SHROUD, With Heavy Duty Cooling
18	J400 3556	4			BOLT
19	J400 4208	4			NUT
20					DRIVE, Fan
	J536 2170	1			Without Serpentine Belt Drive, With Heavy Duty Cooling
	J536 2520	1			With Serpentine Belt Drive
21	J027 1184	4			NUT
22	J536 2528	1			FAN, Cooling, With Serpentine Belt Drive
23	J012 0214	4			WASHER
24	J018 0075	4			BOLT
25					FAN, Cooling, With Heavy Duty Cooling, Without Serpentine Belt Drive
	J099 4277	1			With Fan Drive

MODEL CODES

16=Cherokee 2 Dr.(1981-83)	78=Cherokee 4WD-4 Dr.(1984-86)	64=Comanche 2WD-6 Ft. Box(1986)	25=J-10 Truck 7 Ft. Box(1981-84)
17=Cherokee 2 Dr.(1981-83)	85=CJ-5 (1981-83)	66=Comanche 2WD-7 Ft. Box(1986)	26=J10 Truck 8 Ft. Box(1981-86)
73=Cherokee 2WD-2 Dr.(1984-86)	86=CJ-6(1981)	63=Comanche 4WD-6 Ft. Box(1986)	27=J-20 Truck 8 Ft. Box(1981-86)
74=Cherokee 2WD-4 Dr.(1984-86)	87=CJ-7(1981-86)	65=Comanche 4WD-7 Ft. Box(1986)	15=Wagoneer 4 Dr.(1981-83)
18=Cherokee 4 Dr.(1981-83)	88=CJ-8, Scrambler(1981-86)	15=Grand Wagoneer 4 Dr.(1984-86)	75=Wagoneer 4WD-4 Dr.(1984-86)
77=Cherokee 4WD-2 Dr.(1984-86)			

BODY
CJ=CJ-5, CJ-6, CJ-7, CJ-8, Scrambler(1981-86)
MJ=Comanche Pickup(1986)

STYLES
SJ=Wagoneer(1981-83), Grand Wagoneer(1984-86), Cherokee(1981-83), J-10, J-20(1981-86)
XJ=Wagoneer(1984-86), Cherokee(1984-86)

AR = Use as Required - = Non Illustrated Part P.A.R. = Paint as Required

RADIATOR AND RELATED PARTS 1981-86 SIX CYLINDER SJ CHEROKEE, SJ WAGONEER, J10
Figure 7-1300

81J07 1300

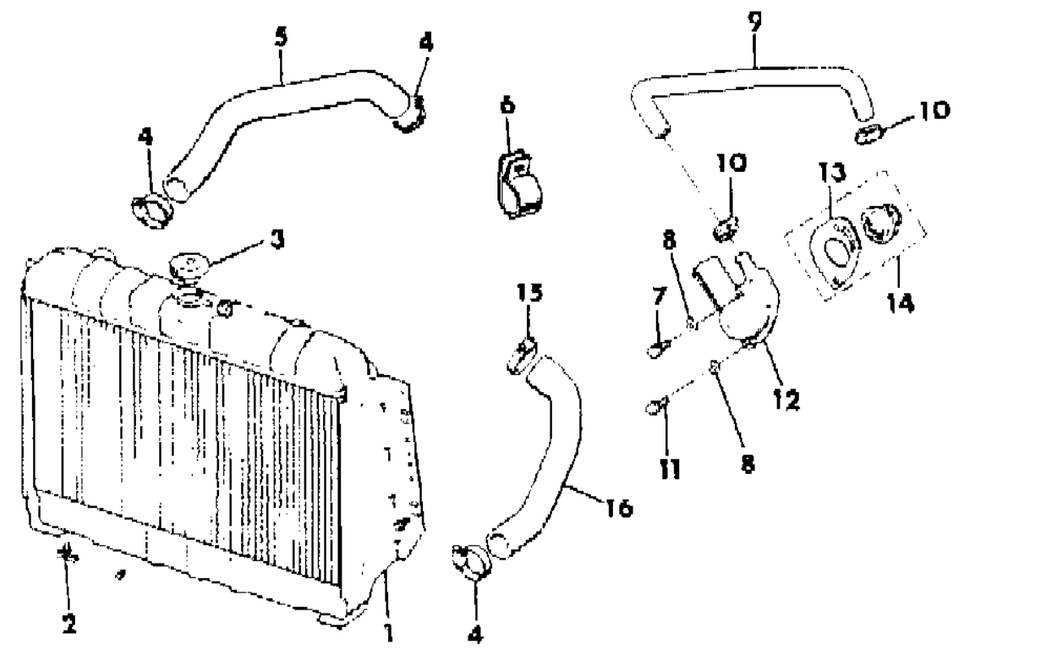

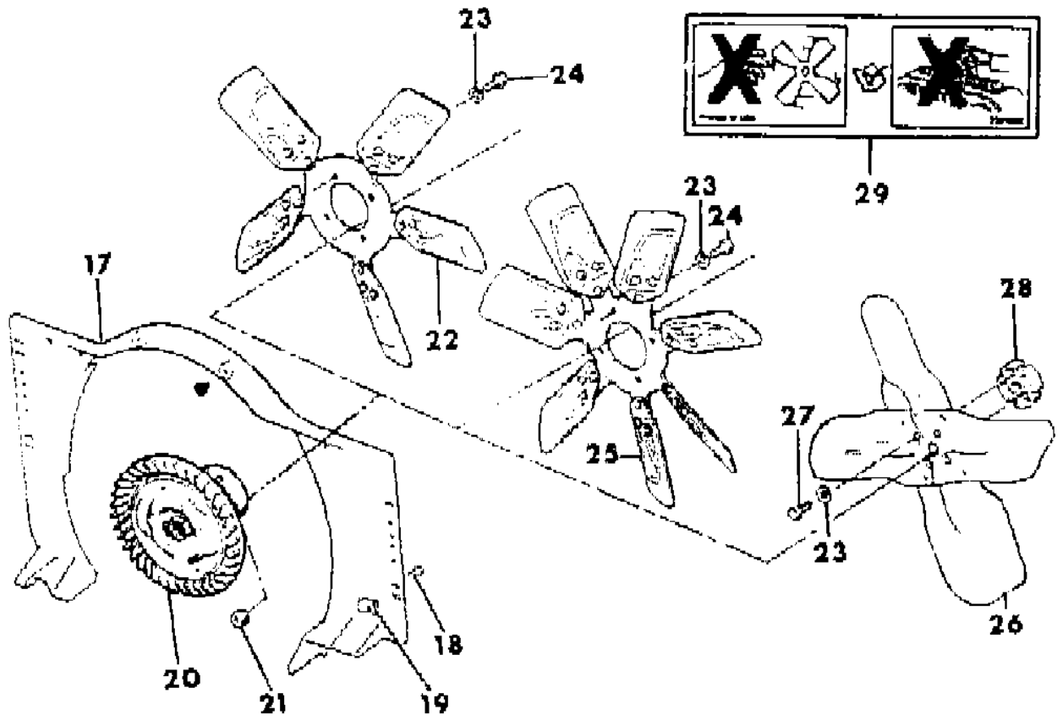

ITEM	PART NUMBER	QTY	BODY	MODEL	DESCRIPTION
	J535 7390	1			Without Fan Drive
26	J322 4489	1			FAN, Cooling, Without Heavy Duty Cooling, Without Serpentine Belt Drive
27	S018 1618	4			BOLT
28	J322 9210	1			SPACER, Without Heavy Duty Cooling, Without Serpentine Belt Drive
29	J323 4806	1			LABEL, Fan

MODEL CODES

16=Cherokee 2 Dr.(1981-83)	78=Cherokee 4WD-4 Dr.(1984-86)	64=Comanche 2WD-6 Ft. Box(1986)	25=J-10 Truck 7 Ft. Box(1981-84)
17=Cherokee 2 Dr.(1981-83)	85=CJ-5 (1981-83)	66=Comanche 2WD-7 Ft. Box(1986)	26=J10 Truck 8 Ft. Box(1981-86)
73=Cherokee 2WD-2 Dr.(1984-86)	86=CJ-6(1981)	63=Comanche 4WD-6 Ft. Box(1986)	27=J-20 Truck 8 Ft. Box(1981-86)
74=Cherokee 2WD-4 Dr.(1984-86)	87=CJ-7(1981-86)	65=Comanche 4WD-7 Ft. Box(1986)	15=Wagoneer 4 Dr.(1981-83)
18=Cherokee 4 Dr.(1981-83)	88=CJ-8, Scrambler(1981-86)	15=Grand Wagoneer 4 Dr.(1984-86)	75=Wagoneer 4WD-4 Dr.(1984-86)
77=Cherokee 4WD-2 Dr.(1984-86)			

BODY
CJ=CJ-5, CJ-6, CJ-7, CJ-8, Scrambler(1981-86)
MJ=Comanche Pickup(1986)

STYLES
SJ=Wagoneer(1981-83), Grand Wagoneer(1984-86), Cherokee(1981-83), J-10, J-20(1981-86)
XJ=Wagoneer(1984-86), Cherokee(1984-86)

AR = Use as Required - = Non Illustrated Part P.A.R. = Paint as Required

RADIATOR AND RELATED PARTS 1981-86 EIGHT CYLINDER SJ CHEROKEE, SJ WAGONEER, J10, J20
Figure 7-1400

81J07 1400

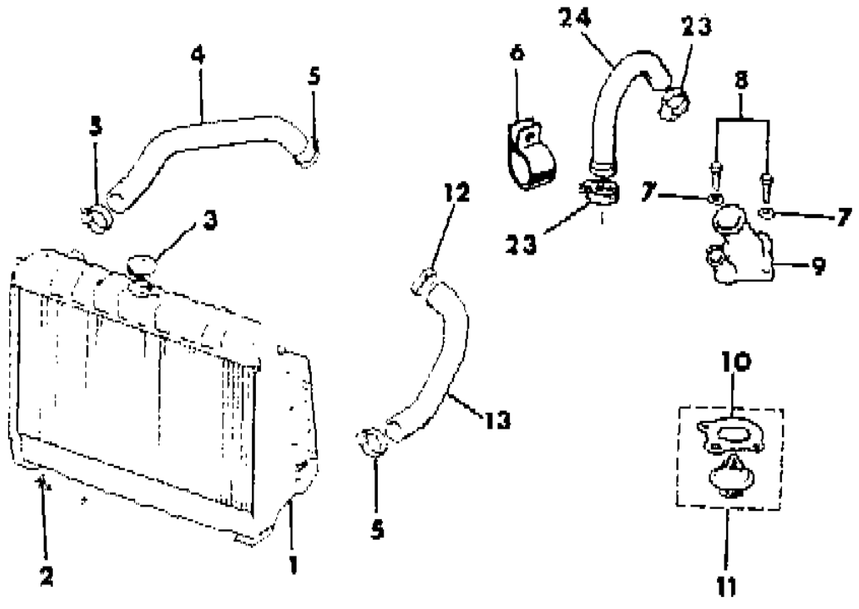

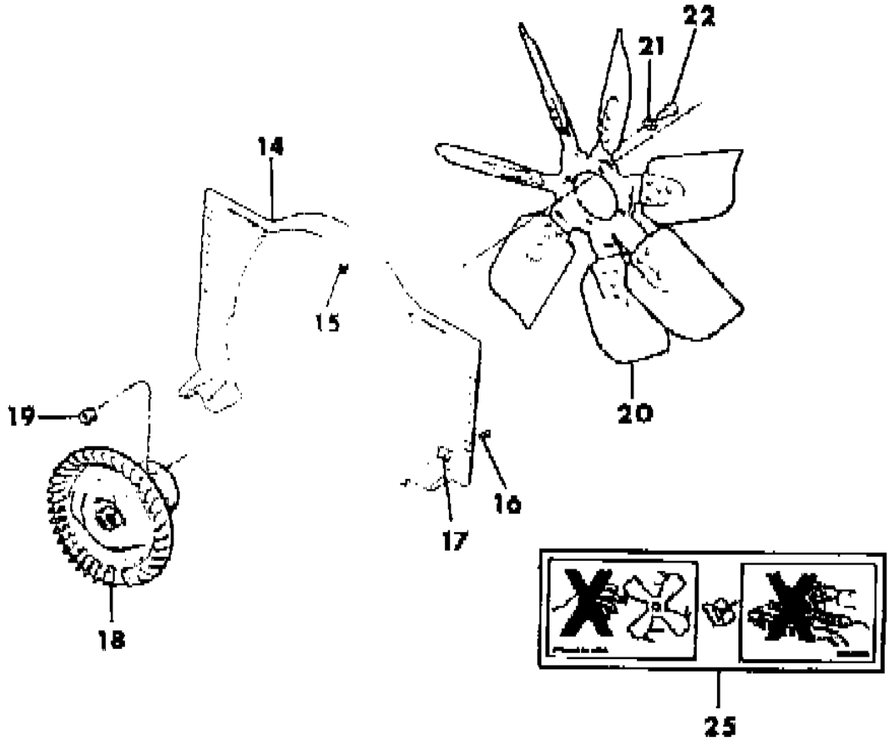

ITEM	PART NUMBER	QTY	BODY	MODEL	DESCRIPTION
1					RADIATOR
	J536 1575	1			Standard Duty, Stamped 5361575
	J536 1577	1			Heavy Duty, Stamped 5361577
2	J535 9274	1			DRAINCOCK
3					CAP, Radiator
	J535 2954	1			Without Heavy Duty Cooling
					With Heavy Duty Cooling
	J590 0584	1			1981
	J535 8177	1			1982-86
4	8350 3499	1			HOSE
5	J320 3078	3			CLAMP
6	J012 0524	2			CLIP
7	J012 0393	2			WASHER
8	J018 0079	2			BOLT
9	J323 8509	1			HOUSING
10	J318 7543	1			GASKET
11	J812 7383	1			THERMOSTAT PACKAGE, Engine Coolant
12	J320 3079	1			CLAMP
13	J535 4528	1			HOSE
14	J536 1650	1			SHROUD, With Heavy Duty Cooling
15	J096 8072	2			BUMPER
16	J400 3556	4			BOLT
17	J400 4208	4			NUT
18	J536 2722	1			DRIVE, Fan
19	J027 1184	4			NUT
20	J099 4277	1			FAN, Cooling
21	J012 0214	4			WASHER, Lock
22	J018 0075	4			BOLT
23	J320 3077	2			CLAMP
24	J318 2494	1			HOSE
25	J323 4806	1			LABEL, Fan

MODEL CODES

16=Cherokee 2 Dr.(1981-83)
17=Cherokee 2 Dr.(1981-83)
73=Cherokee 2WD-2 Dr.(1984-86)
74=Cherokee 2WD-4 Dr.(1984-86)
18=Cherokee 4 Dr.(1981-83)
77=Cherokee 4WD-2 Dr.(1984-86)
78=Cherokee 4WD-4 Dr.(1984-86)
85=CJ-5 (1981-83)
86=CJ-6(1981)
87=CJ-7(1981-86)
88=CJ-8, Scrambler(1981-86)
64=Comanche 2WD-6 Ft. Box(1986)
66=Comanche 2WD-7 Ft. Box(1986)
63=Comanche 4WD-6 Ft. Box(1986)
65=Comanche 4WD-7 Ft. Box(1986)
15=Grand Wagoneer 4 Dr.(1984-86)
25=J-10 Truck 7 Ft. Box(1981-84)
26=J10 Truck 8 Ft. Box(1981-86)
27=J-20 Truck 8 Ft. Box(1981-86)
15=Wagoneer 4 Dr.(1981-83)
75=Wagoneer 4WD-4 Dr.(1984-86)

BODY

CJ=CJ-5, CJ-6, CJ-7, CJ-8, Scrambler(1981-86)
MJ=Comanche Pickup(1986)

STYLES

SJ=Wagoneer(1981-83), Grand Wagoneer(1984-86), Cherokee(1981-83), J-10, J-20(1981-86)
XJ=Wagoneer(1984-86), Cherokee(1984-86)

AR = Use as Required - = Non Illustrated Part P.A.R. = Paint as Required

« RETURN TO GROUP INDEX

CONDENSER TANKS
Figure 7-1500

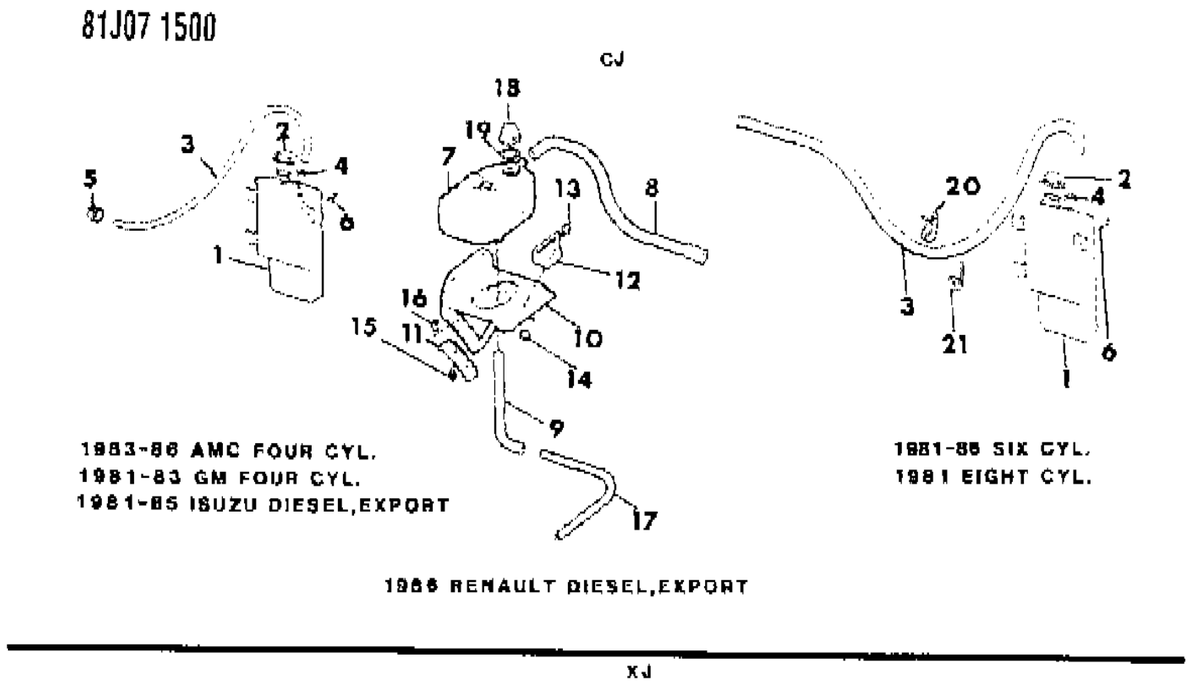

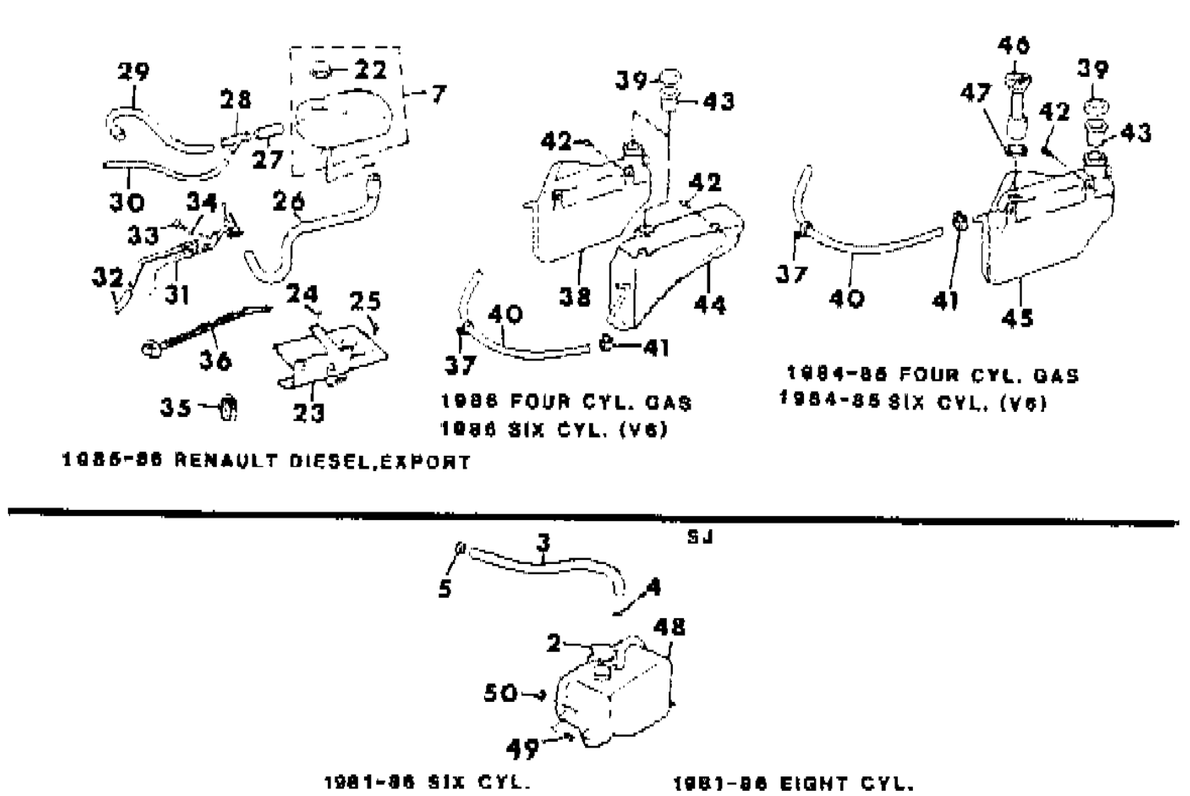

ITEM	PART NUMBER	QTY	BODY	MODEL	DESCRIPTION
1	J536 2920	1			BOTTLE, Coolant ***
2	J322 3202	1			CAP, Coolant Bottle
3	J536 3169	1			HOSE
4	J322 3128	1			CLAMP
5	J093 4246	1			CLAMP
6	J400 5466	2			SCREW
7	T146 2798	1			BOTTLE, Coolant ***
8	J536 4191	1			HOSE
9	J536 4190	1			HOSE
10	J536 3765	1			BRACKET
11	J536 4096	1			BRACKET
12	J536 4098	1			BRACKET
13	1000 0122	1			SCREW
14	J400 3587	1			NUT
15	1000 0091	1			SCREW
16	1000 0060	1			NUT
17	J812 5823	1			HOSE
18	T075 9789	1			CAP, Coolant Bottle
19	T306 1034	1			SEAL
20	J012 0524	1			CLIP
21	J322 3227	AR			STRAP, Tie
22	J076 0508	1			CAP, Coolant Bottle
23	5200 2067	1			BRACKET, Coolant Bottle
24	3420 2399	1			BOLT
25	1150 2453	2			SCREW
26	5200 2063	1			HOSE, Bottle to Heater
27	5200 2070	1			HOSE, Tee to Bottle
28	5200 2066	1			TEE
29	5200 2064	1			HOSE, Thermostat to Tee
30	5200 2065	1			HOSE, Radiator to Tee
31	T072 5376	1			TUBE ASSEMBLY, Coolant ***
32	T071 5737	1			HOSE, Tube to Coolant Pump
33	T300 1120	2			BOLT
34	T305 5007	2			WASHER
35					CLAMP
	3300 0785	AR			12mm thru 20mm
	3300 0784	AR			17mm thru 25mm
	J320 3076	AR			14mm thru 27mm
	J320 3077	AR			21mm thru 44mm

MODEL CODES

16=Cherokee 2 Dr.(1981-83)
17=Cherokee 2 Dr.(1981-83)
73=Cherokee 2WD-2 Dr.(1984-86)
74=Cherokee 2WD-4 Dr.(1984-86)
18=Cherokee 4 Dr.(1981-83)
77=Cherokee 4WD-2 Dr.(1984-86)
78=Cherokee 4WD-4 Dr.(1984-86)
85=CJ-5 (1981-83)
86=CJ-6(1981)
87=CJ-7(1981-86)
88=CJ-8, Scrambler(1981-86)
64=Comanche 2WD-6 Ft. Box(1986)
66=Comanche 2WD-7 Ft. Box(1986)
63=Comanche 4WD-6 Ft. Box(1986)
65=Comanche 4WD-7 Ft. Box(1986)
15=Grand Wagoneer 4 Dr.(1984-86)
25=J-10 Truck 7 Ft. Box(1981-84)
26=J10 Truck 8 Ft. Box(1981-86)
27=J-20 Truck 8 Ft. Box(1981-86)
15=Wagoneer 4 Dr.(1981-83)
75=Wagoneer 4WD-4 Dr.(1984-86)

BODY
CJ=CJ-5, CJ-6, CJ-7, CJ-8, Scrambler(1981-86)
MJ=Comanche Pickup(1986)

STYLES
SJ=Wagoneer(1981-83), Grand Wagoneer(1984-86), Cherokee(1981-83), J-10, J-20(1981-86)
XJ=Wagoneer(1984-86), Cherokee(1984-86)

AR = Use as Required - = Non Illustrated Part P.A.R. = Paint as Required

CONDENSER TANKS
Figure 7-1500

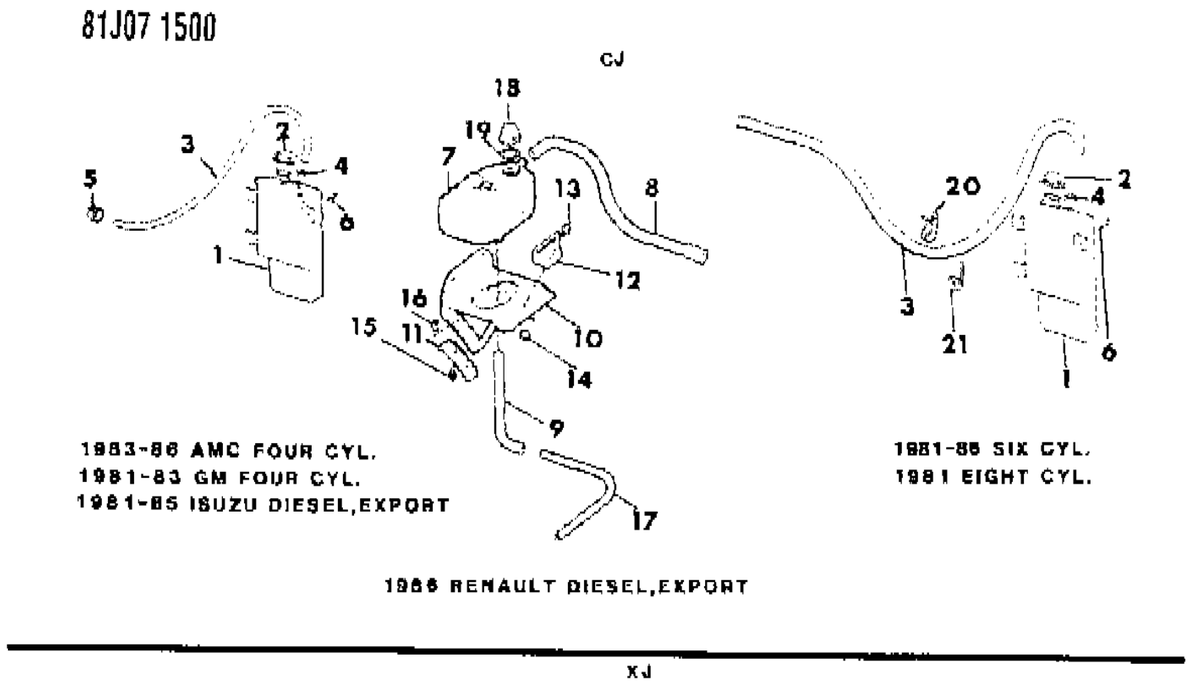

ITEM	PART NUMBER	QTY	BODY	MODEL	DESCRIPTION
	J320 3078	AR			33mm thru 57mm
36					STRAP, Tie
	J322 3227	AR			200mm
	J369 3058	AR			300mm
	J323 0270	AR			350mm
	J323 5187	AR			450mm
37	J012 0526	1			CLIP
38	5300 0018	1			BOTTLE, Coolant, Four Cylinder EXPORT, Six Cylinder Engine ***
39	3300 0438	1			CAP, Coolant Bottle
40	5300 0020	1			HOSE
41	J400 6047	1			CLAMP
42	3420 1784	2			SCREW
43	3300 0576	1			BAFFLE, Coolant Bottle
44	5200 2074	1			BOTTLE, Coolant, Four Cylinder, Without EXPORT ***
45					BOTTLE, Coolant ***
	5300 0018	1			Without Coolant Level Sensor
	5300 0963	1			With Coolant Level Sensor
46	5300 1316	1			SENSOR, Coolant Level
47	5600 0595	1			GASKET
48	J535 8026	1			BOTTLE, Coolant ***
49					SCREW
	J018 8926	1			.62"
	J400 5466	1			.50"
50	J012 0361	1			NUT

MODEL CODES

16=Cherokee 2 Dr.(1981-83)	78=Cherokee 4WD-4 Dr.(1984-86)	64=Comanche 2WD-6 Ft. Box(1986)	25=J-10 Truck 7 Ft. Box(1981-84)
17=Cherokee 2 Dr.(1981-83)	85=CJ-5 (1981-83)	66=Comanche 2WD-7 Ft. Box(1986)	26=J10 Truck 8 Ft. Box(1981-86)
73=Cherokee 2WD-2 Dr.(1984-86)	86=CJ-6(1981)	63=Comanche 4WD-6 Ft. Box(1986)	27=J-20 Truck 8 Ft. Box(1981-86)
74=Cherokee 2WD-4 Dr.(1984-86)	87=CJ-7(1981-86)	65=Comanche 4WD-7 Ft. Box(1986)	15=Wagoneer 4 Dr.(1981-83)
18=Cherokee 4 Dr.(1981-83)	88=CJ-8, Scrambler(1981-86)	15=Grand Wagoneer 4 Dr.(1984-86)	75=Wagoneer 4WD-4 Dr.(1984-86)
77=Cherokee 4WD-2 Dr.(1984-86)			

BODY
CJ=CJ-5, CJ-6, CJ-7, CJ-8, Scrambler(1981-86)
MJ=Comanche Pickup(1986)

STYLES
SJ=Wagoneer(1981-83), Grand Wagoneer(1984-86), Cherokee(1981-83), J-10, J-20(1981-86)
XJ=Wagoneer(1984-86), Cherokee(1984-86)

AR = Use as Required - = Non Illustrated Part P.A.R. = Paint as Required

« RETURN TO GROUP INDEX

OIL COOLER LINES AUTOMATIC TRANSMISSION CJ-5,6,7,8, SCRAMBLER
Figure 7-1600

81J07 1600

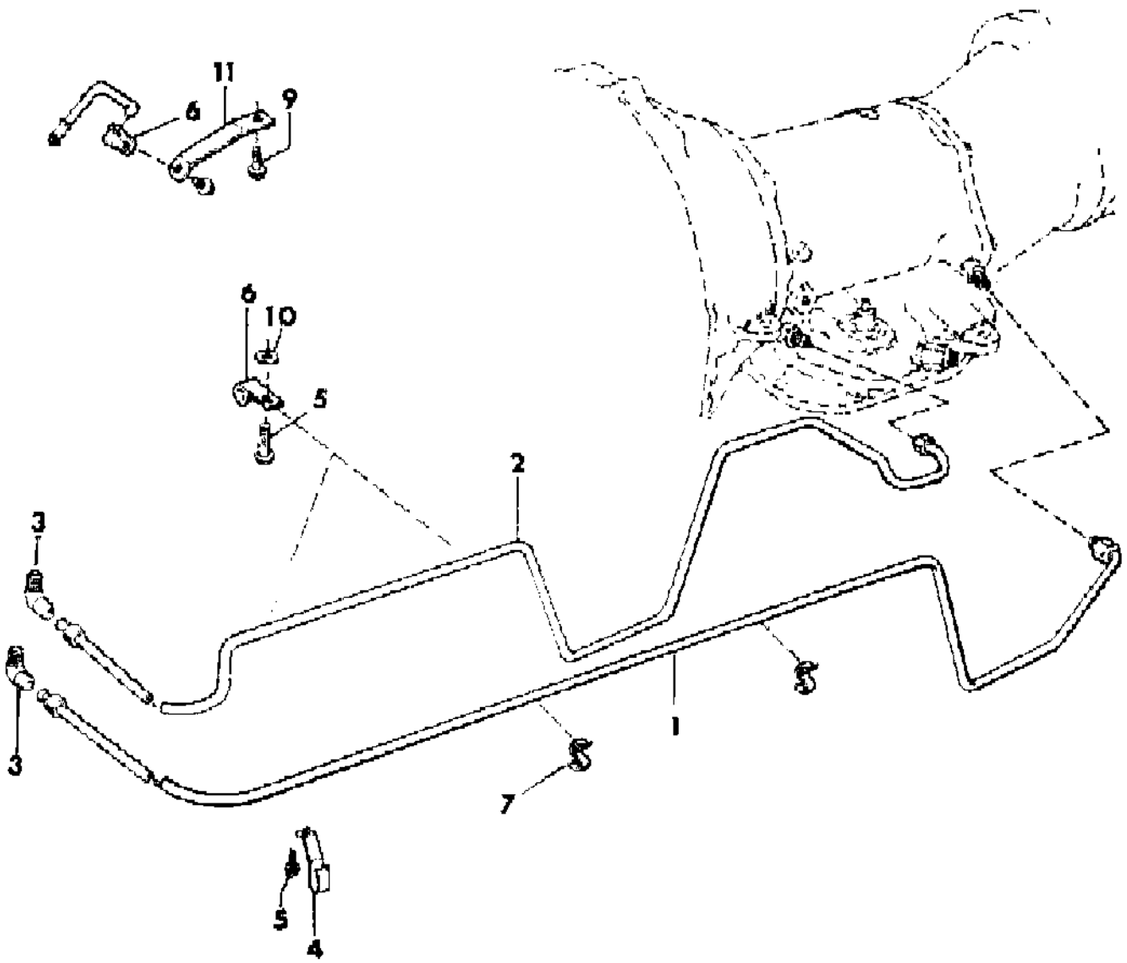

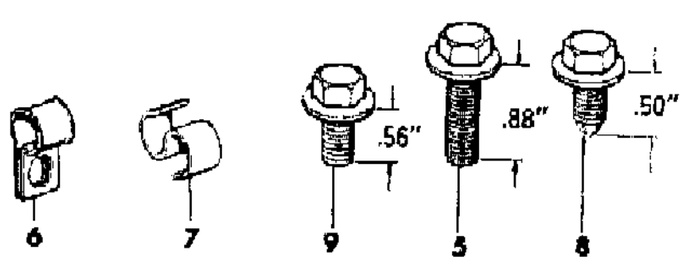

ITEM	PART NUMBER	QTY	BODY	MODEL	DESCRIPTION
1					TUBE, Oil Supply
	J536 0941	1			1981: Without Four Cylinder, Without Heavy Duty Cooling
	J536 2447	1			1981: Six Cylinder, With Heavy Duty Cooling
	J536 2449	1			1981: Four Cylinder
	J536 3800	1			1982-86: Six Cylinder
2					TUBE, Oil Return
	J536 0943	1			1981: Without Four Cylinder, Without Heavy Duty Cooling
	J536 2448	21			1981: Six Cylinder, With Heavy Duty Cooling
	J536 2450	1			1981: Four Cylinder
	J536 3801	1			1982-86: Six Cylinder
3	J011 8754	2			CONNECTOR
4	J321 5925	1			CLIP
5	J400 6393	1			SCREW
6	G102 0522	3			CLIP, Tube
7	J400 0021	AR			CLIP "S" ***
8	J942 6241	2			BOLT
9	J400 6296	2			BOLT
10	J066 9842	4			SPACER
11	J536 3747	1			BRACKET

MODEL CODES

16=Cherokee 2 Dr.(1981-83)
17=Cherokee 2 Dr.(1981-83)
73=Cherokee 2WD-2 Dr.(1984-86)
74=Cherokee 2WD-4 Dr.(1984-86)
18=Cherokee 4 Dr.(1981-83)
77=Cherokee 4WD-2 Dr.(1984-86)
78=Cherokee 4WD-4 Dr.(1984-86)
85=CJ-5 (1981-83)
86=CJ-6(1981)
87=CJ-7(1981-86)
88=CJ-8, Scrambler(1981-86)
64=Comanche 2WD-6 Ft. Box(1986)
66=Comanche 2WD-7 Ft. Box(1986)
63=Comanche 4WD-6 Ft. Box(1986)
65=Comanche 4WD-7 Ft. Box(1986)
15=Grand Wagoneer 4 Dr.(1984-86)
25=J-10 Truck 7 Ft. Box(1981-84)
26=J10 Truck 8 Ft. Box(1981-86)
27=J-20 Truck 8 Ft. Box(1981-86)
15=Wagoneer 4 Dr.(1981-83)
75=Wagoneer 4WD-4 Dr.(1984-86)

BODY
CJ=CJ-5, CJ-6, CJ-7, CJ-8, Scrambler(1981-86)
MJ=Comanche Pickup(1986)

STYLES
SJ=Wagoneer(1981-83), Grand Wagoneer(1984-86), Cherokee(1981-83), J-10, J-20(1981-86)
XJ=Wagoneer(1984-86), Cherokee(1984-86)

AR = Use as Required - = Non Illustrated Part P.A.R. = Paint as Required

« RETURN TO GROUP INDEX

OIL COOLER LINES AUTOMATIC TRANSMISSION XJ CHEROKEE, XJ WAGONEER, COMANCHE
Figure 7-1700

81J07 1700

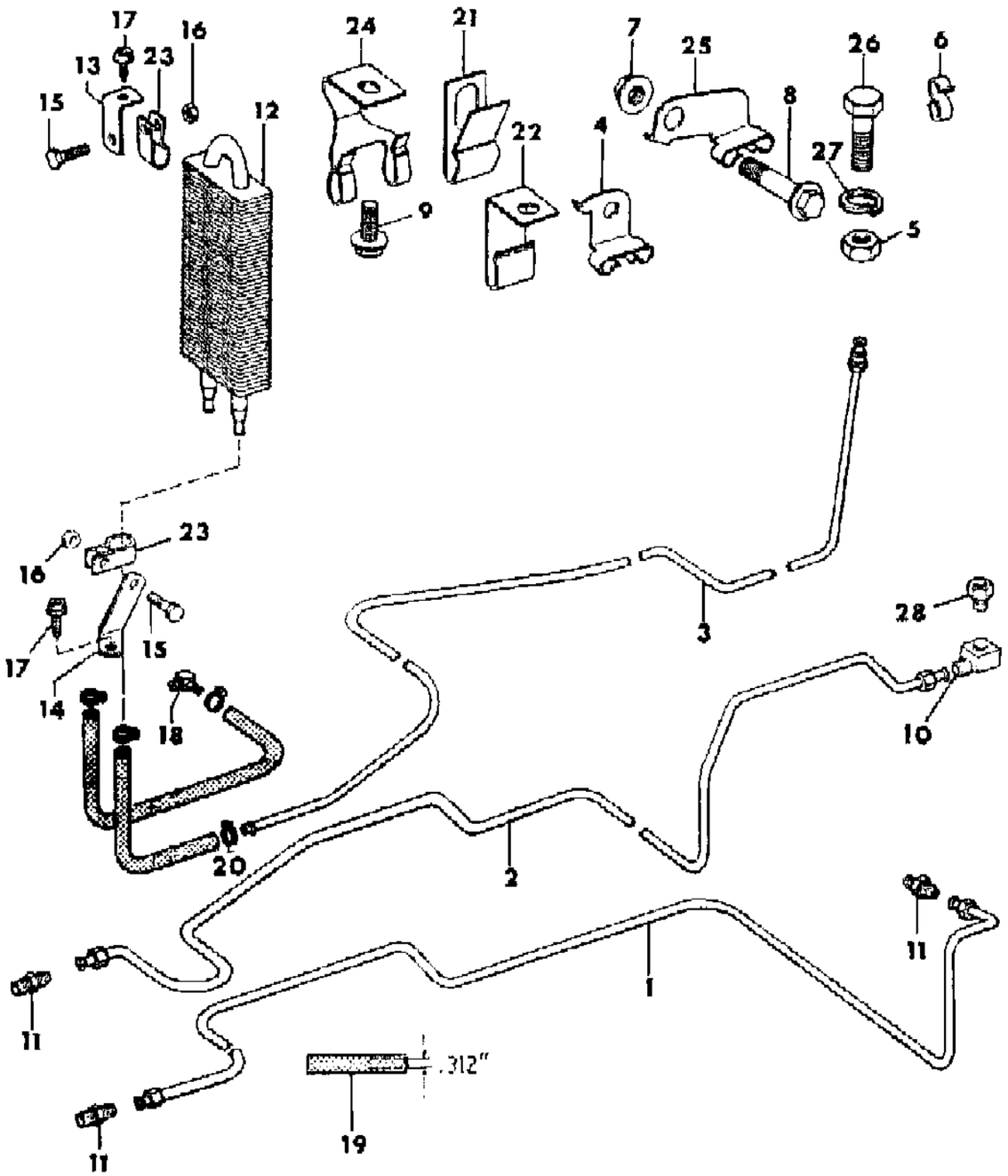

ITEM	PART NUMBER	QTY	BODY	MODEL	DESCRIPTION
1					TUBE, Oil Supply
	5300 1606	1			Four Cylinder Gas
	5300 1609	1			Six Cylinder 1986
	5300 4483	1			Six Cylinder 1987
	5300 1456	1			Diesel
2					TUBE, Oil Return
	5300 1607	1			Four Cylinder Gas, Standard Duty
	5300 1608	1			Four Cylinder Gas, With Heavy Duty Cooling
	5300 1610	1			Six Cylinder, Standard Duty
	5300 1611	1			Six Cylinder, With Heavy Duty Cooling
3					TUBE, Oil Return
	5300 1457	1			Diesel
	5300 1625	1			Six Cylinder, With Trailer Towing Package
4	5300 0859	1			CLIP, Four Cylinder Gas
5	J027 1501	1			NUT
6	J400 0021	1			CLIP, S-Type
7	1150 3745	1			NUT
8	3420 1686	1			BOLT
9	J400 6297	1			BOLT
10	J400 7158	1			FITTING, 90 Degree
11	S011 8749	1			FITTING
12	J323 5492	1			COOLER, Oil Auxiliary
13	5300 0966	1			BRACKET
14	5300 0965	1			BRACKET
15	1150 3876	4			BOLT
16	3420 1246	2			NUT
17	1150 2453	2			SCREW
18	J400 6349	1			FITTING
19	J812 5814	AR			HOSE, Bulk
20	J400 6502	4			CLAMP
21	3420 1953	1			CLIP, Four Cylinder
22	3420 1954	1			CLIP, Six Cylinder
23	J012 0528	2			CLIP
24	5300 0857	1			CLIP, Six Cylinder
25	5300 1426	1			CLIP, Six Cylinder
26	J018 0146	1			BOLT
27	J012 0383	1			WASHER
28	S044 3998	1			ADAPTER

MODEL CODES

16=Cherokee 2 Dr.(1981-83)
17=Cherokee 2 Dr.(1981-83)
73=Cherokee 2WD-2 Dr.(1984-86)
74=Cherokee 2WD-4 Dr.(1984-86)
18=Cherokee 4 Dr.(1981-83)
77=Cherokee 4WD-2 Dr.(1984-86)
78=Cherokee 4WD-4 Dr.(1984-86)
85=CJ-5 (1981-83)
86=CJ-6(1981)
87=CJ-7(1981-86)
88=CJ-8, Scrambler(1981-86)
64=Comanche 2WD-6 Ft. Box(1986)
66=Comanche 2WD-7 Ft. Box(1986)
63=Comanche 4WD-6 Ft. Box(1986)
65=Comanche 4WD-7 Ft. Box(1986)
15=Grand Wagoneer 4 Dr.(1984-86)
25=J-10 Truck 7 Ft. Box(1981-84)
26=J10 Truck 8 Ft. Box(1981-86)
27=J-20 Truck 8 Ft. Box(1981-86)
15=Wagoneer 4 Dr.(1981-83)
75=Wagoneer 4WD-4 Dr.(1984-86)

BODY
CJ=CJ-5, CJ-6, CJ-7, CJ-8, Scrambler(1981-86)
MJ=Comanche Pickup(1986)

STYLES
SJ=Wagoneer(1981-83), Grand Wagoneer(1984-86), Cherokee(1981-83), J-10, J-20(1981-86)
XJ=Wagoneer(1984-86), Cherokee(1984-86)

AR = Use as Required - = Non Illustrated Part P.A.R. = Paint as Required

« RETURN TO GROUP INDEX

OIL COOLER LINES AUTOMATIC TRANSMISSION SJ CHEROKEE, SJ WAGONEER, J10, J20
Figure 7-1800

81J07 1800

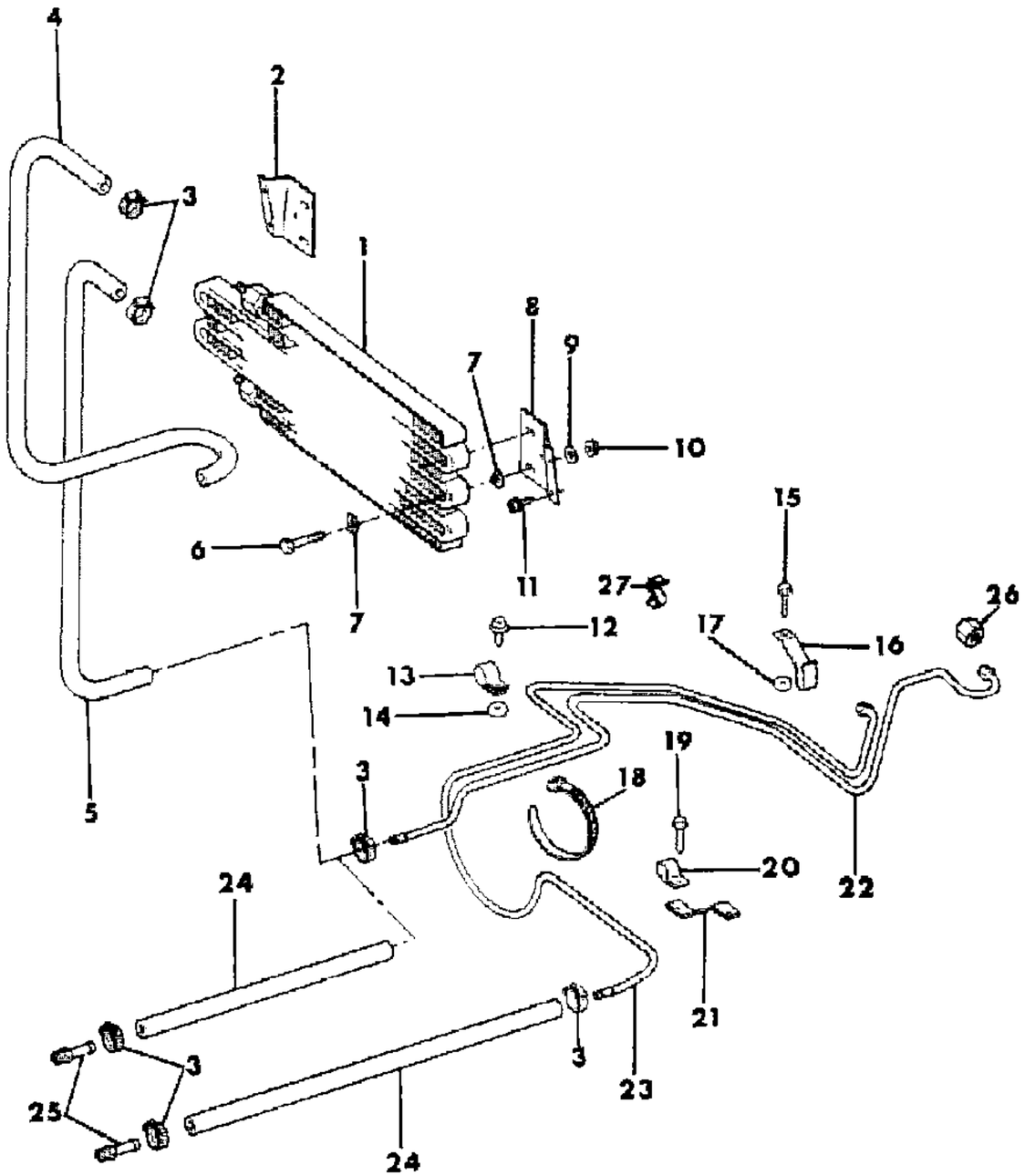

ITEM	PART NUMBER	QTY	BODY	MODEL	DESCRIPTION
1	J536 1659	1			COOLER
2	J536 1664	1			BRACKET, Right
3					CLAMP
	J400 6661	4			.44" to .78"
	J400 6502	4			.22" to .62"
4	J536 1662	1			HOSE
5	J536 1661	1			HOSE
6	J941 5803	4			SCREW
7	J536 1822	8			WASHER
8	J536 1663	1			BRACKET, Left
9	J012 0392	4			WASHER
10	J941 6918	4			NUT
11	J400 1701	4			SCREW
12	J400 6393	1			SCREW
13	J012 0522	1			CLIP
14	J094 1011	1			SPACER
15	J942 3545	1			BOLT
16	J321 5925	1			CLIP
17	J545 5277	1			SPACER
18	J322 3227	AR			SPACER
19	J942 6241	1			SCREW
20	J012 0522	1			CLIP
21	J536 3746	1			BRACKET
22					TUBE ASSEMBLY, Return ***
					SIX CYLINDER
	J536 1815	1			1981
	J536 3682	1			1982-86: Without Auxiliary Cooler
	J536 3742	1			1982-86: With Auxiliary Cooler
					Eight Cylinder
	J536 1980	1			1981: Model 15,16,17,18,25,26
	J536 1814	1		27	1981
	J536 3797	1			1982-86: Without Auxiliary Cooler
	J536 3798	1			1982-86: With Auxiliary Cooler
23					TUBE ASSEMBLY, Supply ***
					Six Cylinder
	J536 0937	1			1981
	J536 3714	1			1982-86: Without Transmission Coded "3240231"
	J536 3350	1			1982-86: 1984 With Transmission Coded "8933000913"
					Eight Cylinder

MODEL CODES
16=Cherokee 2 Dr.(1981-83)
17=Cherokee 2 Dr.(1981-83)
73=Cherokee 2WD-2 Dr.(1984-86)
74=Cherokee 2WD-4 Dr.(1984-86)
18=Cherokee 4 Dr.(1981-83)
77=Cherokee 4WD-2 Dr.(1984-86)
78=Cherokee 4WD-4 Dr.(1984-86)
85=CJ-5 (1981-83)
86=CJ-6(1981)
87=CJ-7(1981-86)
88=CJ-8, Scrambler(1981-86)
64=Comanche 2WD-6 Ft. Box(1986)
66=Comanche 2WD-7 Ft. Box(1986)
63=Comanche 4WD-6 Ft. Box(1986)
65=Comanche 4WD-7 Ft. Box(1986)
15=Grand Wagoneer 4 Dr.(1984-86)
25=J-10 Truck 7 Ft. Box(1981-84)
26=J10 Truck 8 Ft. Box(1981-86)
27=J-20 Truck 8 Ft. Box(1981-86)
15=Wagoneer 4 Dr.(1981-83)
75=Wagoneer 4WD-4 Dr.(1984-86)

BODY
CJ=CJ-5, CJ-6, CJ-7, CJ-8, Scrambler(1981-86)
MJ=Comanche Pickup(1986)

STYLES
SJ=Wagoneer(1981-83), Grand Wagoneer(1984-86), Cherokee(1981-83), J-10, J-20(1981-86)
XJ=Wagoneer(1984-86), Cherokee(1984-86)

AR = Use as Required - = Non Illustrated Part P.A.R. = Paint as Required

OIL COOLER LINES AUTOMATIC TRANSMISSION SJ CHEROKEE, SJ WAGONEER, J10, J20
Figure 7-1800

81J07 1800

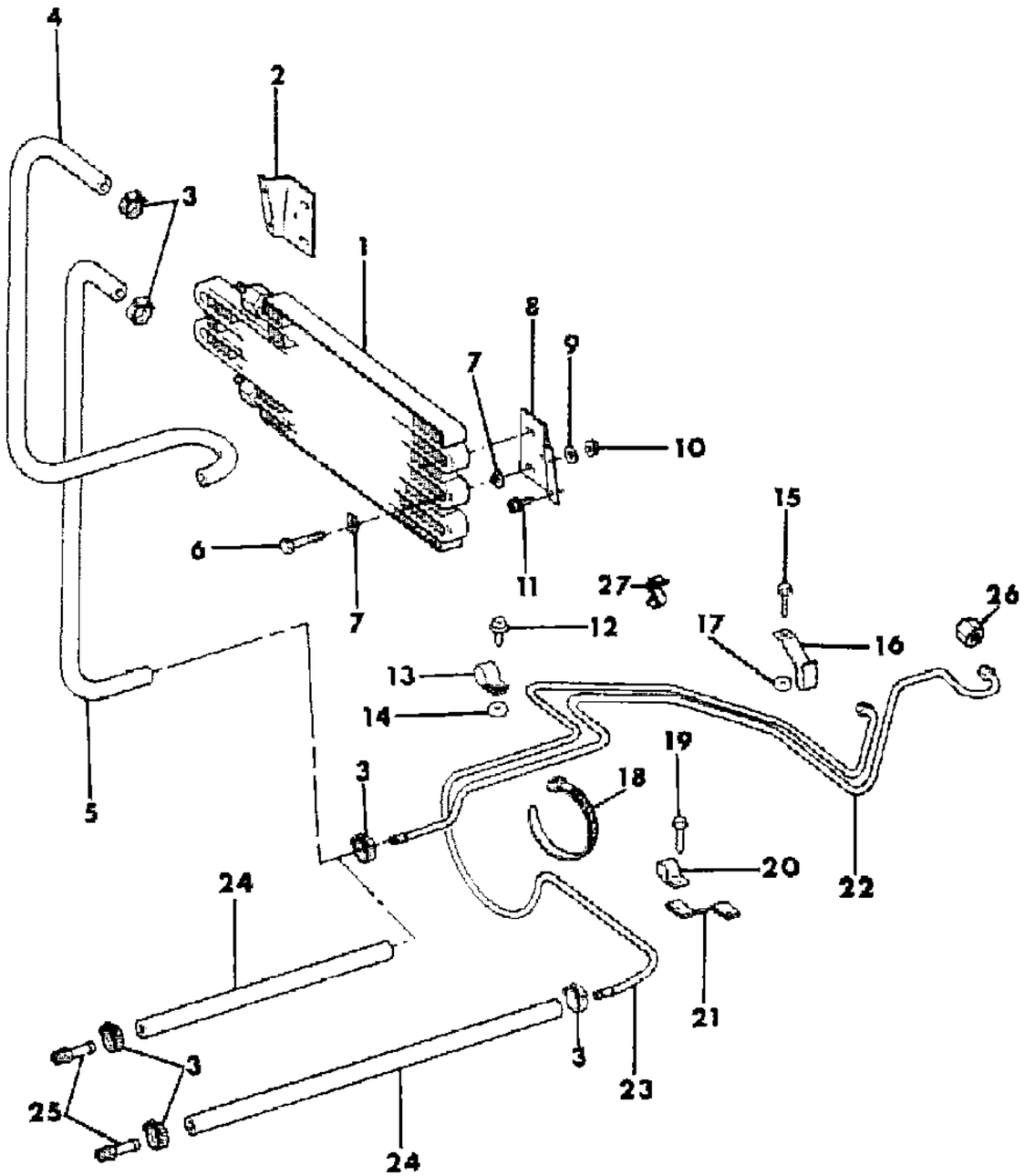

ITEM	PART NUMBER	QTY	BODY	MODEL	DESCRIPTION
	J536 1813	1			1981
	J536 3808	1			1982-86
24	J812 5814	1			HOSE, Bulk
25	J400 6662	2			CONNECTOR
26	J400 4457	2			NUT
27	J400 0021	AR			CLIP, "S"

MODEL CODES

16=Cherokee 2 Dr.(1981-83)
17=Cherokee 2 Dr.(1981-83)
73=Cherokee 2WD-2 Dr.(1984-86)
74=Cherokee 2WD-4 Dr.(1984-86)
18=Cherokee 4 Dr.(1981-83)
77=Cherokee 4WD-2 Dr.(1984-86)
78=Cherokee 4WD-4 Dr.(1984-86)
85=CJ-5 (1981-83)
86=CJ-6(1981)
87=CJ-7(1981-86)
88=CJ-8, Scrambler(1981-86)
64=Comanche 2WD-6 Ft. Box(1986)
66=Comanche 2WD-7 Ft. Box(1986)
63=Comanche 4WD-6 Ft. Box(1986)
65=Comanche 4WD-7 Ft. Box(1986)
15=Grand Wagoneer 4 Dr.(1984-86)
25=J-10 Truck 7 Ft. Box(1981-84)
26=J10 Truck 8 Ft. Box(1981-86)
27=J-20 Truck 8 Ft. Box(1981-86)
15=Wagoneer 4 Dr.(1981-83)
75=Wagoneer 4WD-4 Dr.(1984-86)

BODY
CJ=CJ-5, CJ-6, CJ-7, CJ-8, Scrambler(1981-86)
MJ=Comanche Pickup(1986)

STYLES
SJ=Wagoneer(1981-83), Grand Wagoneer(1984-86), Cherokee(1981-83), J-10, J-20(1981-86)
XJ=Wagoneer(1984-86), Cherokee(1984-86)

AR = Use as Required - = Non Illustrated Part P.A.R. = Paint as Required

« RETURN TO GROUP INDEX

DRIVE BELTS CJ-5,6,7,8, SCRAMBLER
Figure 7-1900

81J07 1900

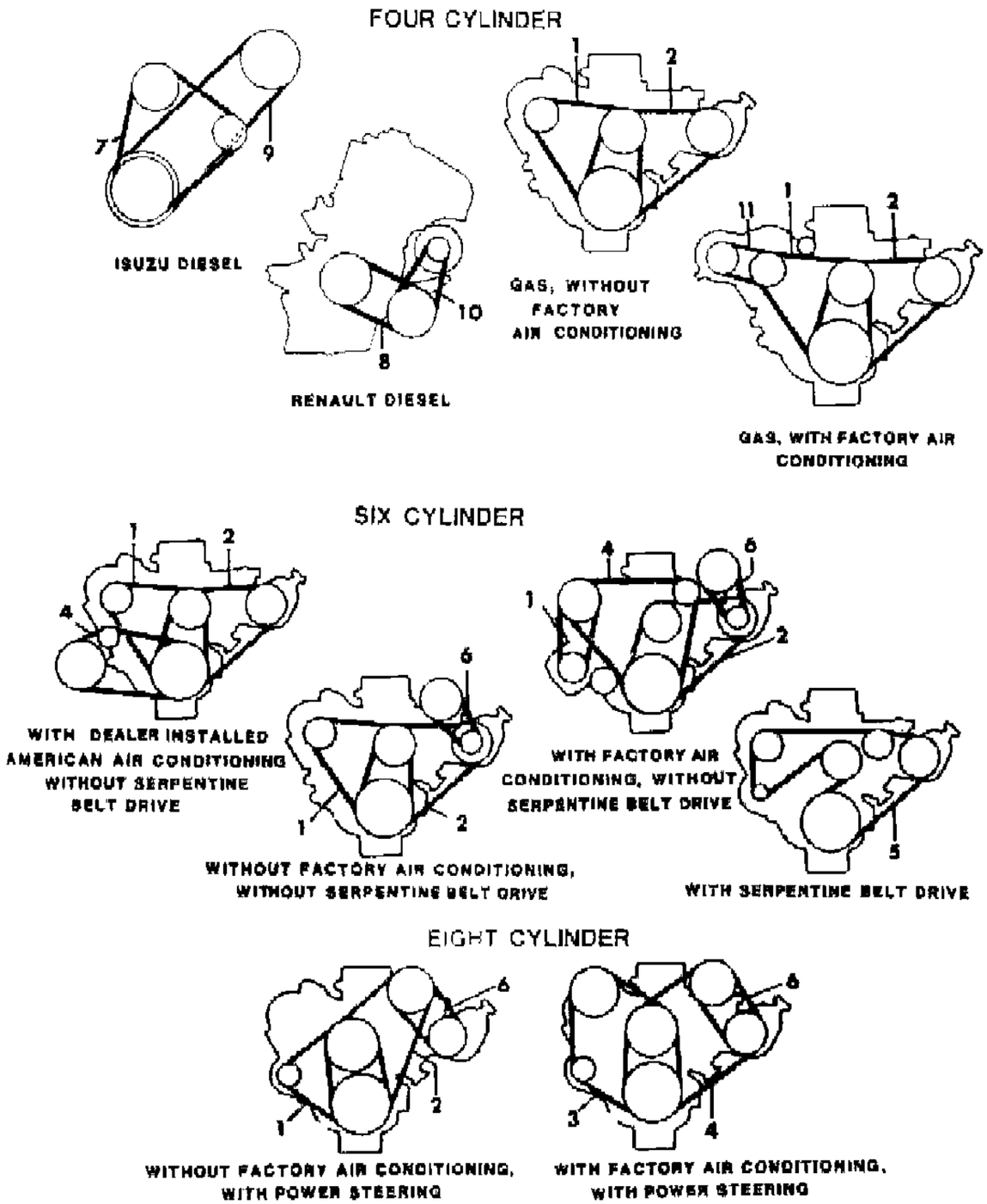

ITEM	PART NUMBER	QTY	BODY	MODEL	DESCRIPTION
1					BELT, Alternator
					Four Cylinder Engine
	J323 9606	1			1981-83: With GM Engine, Without Factory Air Conditioning, Without Dealer Installed American Air Conditioning
	J323 6834	1			1981-83: With GM Engine, With Factory Air Conditioning
	J813 2878	1			1981-83: With GM Engine, With Dealer Installed American Air Conditioning
	J323 9615	1			1983-86: With AMC Engine, Without Factory Air Conditioning, Without Dealer Installed American Air Conditioning
					Six Cylinder Engine
	J323 9615	1			Without Factory Air Conditioning, Without Dealer Installed American Air Conditioning, Without 70 AMP, 85 AMP Alternator
	J323 8269	1			Without Factory Air Conditioning, Without Dealer Installed American Air Conditioning, With 70 AMP, 85 AMP Alternator
	J322 5356	1			With Factory Air Conditioning, Without Exhaust Emission Pump, Without Power Steering
	J322 6936	1			With Factory Air Conditioning, With Exhaust Emission Pump, With Power Steering
	J813 3877	1			With Dealer Installed American Air Conditioning, Without California
	J323 9645	1			With Factory Air Conditioning, Without Dealer Installed American Air Conditioning, To Crankshaft Pulley Only
					Eight Cylinder Engine
	J322 7690	1			Without Factory Air Conditioning, Without Dealer Installed American Air Conditioning, Without 70 AMP, 85 AMP Alternator
2					BELT, Power Steering
					Four Cylinder Engine
	S943 3651	1			1981-83: With GM Engine
	J322 6936	1			1983-86: With AMC Engine, Without Factory Air Conditioning
					Six Cylinder Engine
	J322 6936	1			With Exhaust Emission Pump
					Eight Cylinder Engine
	J322 7692	1			With Exhaust Emission Pump
3					BELT SET, Alternator ***
					Eight Cylinder Engine
	J536 2181	1			Without Factory Air Conditioning, With 70 AMP, 85 AMP Alternator

MODEL CODES

16=Cherokee 2 Dr.(1981-83)	78=Cherokee 4WD-4 Dr.(1984-86)	64=Comanche 2WD-6 Ft. Box(1986)	25=J-10 Truck 7 Ft. Box(1981-84)
17=Cherokee 2 Dr.(1981-83)	85=CJ-5 (1981-83)	66=Comanche 2WD-7 Ft. Box(1986)	26=J10 Truck 8 Ft. Box(1981-86)
73=Cherokee 2WD-2 Dr.(1984-86)	86=CJ-6(1981)	63=Comanche 4WD-6 Ft. Box(1986)	27=J-20 Truck 8 Ft. Box(1981-86)
74=Cherokee 2WD-4 Dr.(1984-86)	87=CJ-7(1981-86)	65=Comanche 4WD-7 Ft. Box(1986)	15=Wagoneer 4 Dr.(1981-83)
18=Cherokee 4 Dr.(1981-83)	88=CJ-8, Scrambler(1981-86)	15=Grand Wagoneer 4 Dr.(1984-86)	75=Wagoneer 4WD-4 Dr.(1984-86)
77=Cherokee 4WD-2 Dr.(1984-86)			

BODY
CJ=CJ-5, CJ-6, CJ-7, CJ-8, Scrambler(1981-86)
MJ=Comanche Pickup(1986)

STYLES
SJ=Wagoneer(1981-83), Grand Wagoneer(1984-86), Cherokee(1981-83), J-10, J-20(1981-86)
XJ=Wagoneer(1984-86), Cherokee(1984-86)

AR = Use as Required - = Non Illustrated Part P.A.R. = Paint as Required

DRIVE BELTS CJ-5,6,7,8, SCRAMBLER
Figure 7-1900

81J07 1900

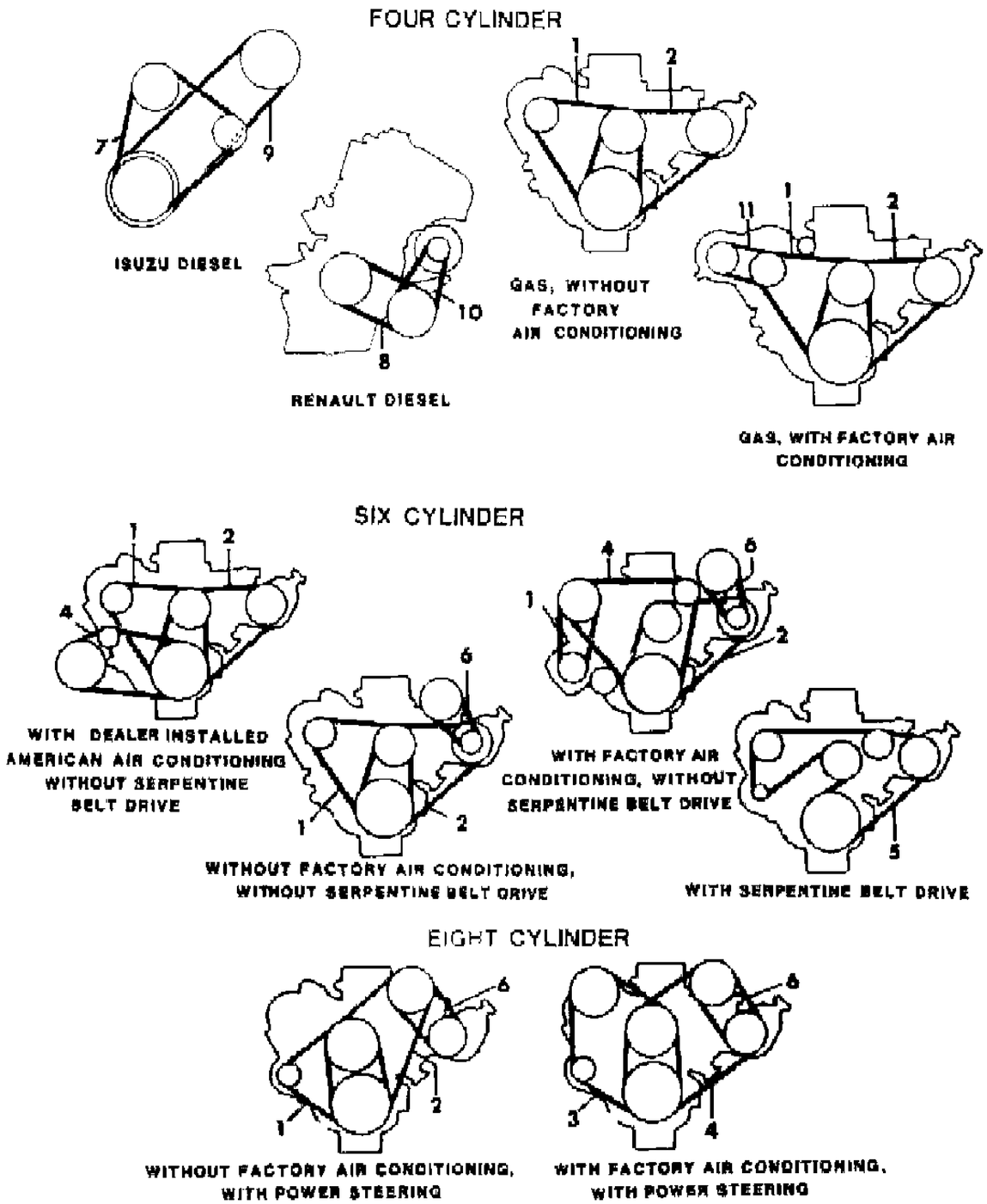

ITEM	PART NUMBER	QTY	BODY	MODEL	DESCRIPTION
	J536 2180	1			With Factory Air Conditioning, With 70 AMP, 85 AMP Alternator
	J322 7691	1			With Factory Air Conditioning, Without 70 AMP, 85 AMP Alternator
	J813 1730	1			With Dealer Installed American Air Conditioning
4					BELT, Air Conditioning
					Six Cylinder Engine
	J322 5357	1			1981: With Factory Air Conditioning, Without Dealer Installed American Air Conditioning
	J324 1403	1			1982-86: With Factory Air Conditioning, Without Dealer Installed American Air Conditioning
	J322 7692	1			1981-83: With Dealer Installed American Air Conditioning
	8350 4325	1			1984-86: With Dealer Installed American Air Conditioning
					Eight Cylinder Engine
	J322 7691	1			1981-86: With Factory Air Conditioning, Without Dealer Installed American Air Conditioning
	J813 1730	1			1981-86: With Dealer Installed American Air Conditioning
5					BELT, Serpentine
	J323 9591	1			1981: With Factory Air Conditioning, With Power Steering, Without 70 AMP Alternator
	J323 9595	1			1981-82: Without Factory Air Conditioning, With Power Steering, Without 70 AMP Alternator
	J323 9594	1			1981-82: Without Factory Air Conditioning, Without Power Steering, Without 70 AMP Alternator
	J324 1096	1			1982: With Factory Air Conditioning, With Power Steering, Without 70 AMP Alternator
	J323 9594	1			1983-86: With Power Steering, With 56-66 AMP Alternator
	3300 0558	1			1983-86: Without Power Steering, With 56-66 AMP Alternator
6					BELT, Air Pump
	J322 6939	1			Six Cylinder Engine
	J322 8287	1			Eight Cylinder Engine
7					BELT, Alternator, Diesel, EXPORT
	J806 0290	1			1985-85
8					BELT, Alternator, Diesel, EXPORT
	T069 4741	1			1986
9	J536 2822	1			BELT, Power Steering, Diesel
10	T134 8230	1			BELT, Power Steering, Diesel
11					BELT, Compressor
	J813 2879	1			1981-83: With GM Engine, With Dealer Installed American Air Conditioning

MODEL CODES

16=Cherokee 2 Dr.(1981-83)	78=Cherokee 4WD-4 Dr.(1984-86)	64=Comanche 2WD-6 Ft. Box(1986)	25=J-10 Truck 7 Ft. Box(1981-84)
17=Cherokee 2 Dr.(1981-83)	85=CJ-5 (1981-83)	66=Comanche 2WD-7 Ft. Box(1986)	26=J10 Truck 8 Ft. Box(1981-86)
73=Cherokee 2WD-2 Dr.(1984-86)	86=CJ-6(1981)	63=Comanche 4WD-6 Ft. Box(1986)	27=J-20 Truck 8 Ft. Box(1981-86)
74=Cherokee 2WD-4 Dr.(1984-86)	87=CJ-7(1981-86)	65=Comanche 4WD-7 Ft. Box(1986)	15=Wagoneer 4 Dr.(1981-83)
18=Cherokee 4 Dr.(1981-83)	88=CJ-8, Scrambler(1981-86)	15=Grand Wagoneer 4 Dr.(1984-86)	75=Wagoneer 4WD-4 Dr.(1984-86)
77=Cherokee 4WD-2 Dr.(1984-86)			

BODY
CJ=CJ-5, CJ-6, CJ-7, CJ-8, Scrambler(1981-86)
MJ=Comanche Pickup(1986)

STYLES
SJ=Wagoneer(1981-83), Grand Wagoneer(1984-86), Cherokee(1981-83), J-10, J-20(1981-86)
XJ=Wagoneer(1984-86), Cherokee(1984-86)

AR = Use as Required - = Non Illustrated Part P.A.R. = Paint as Required

DRIVE BELTS CJ-5,6,7,8, SCRAMBLER
Figure 7-1900

81J07 1900

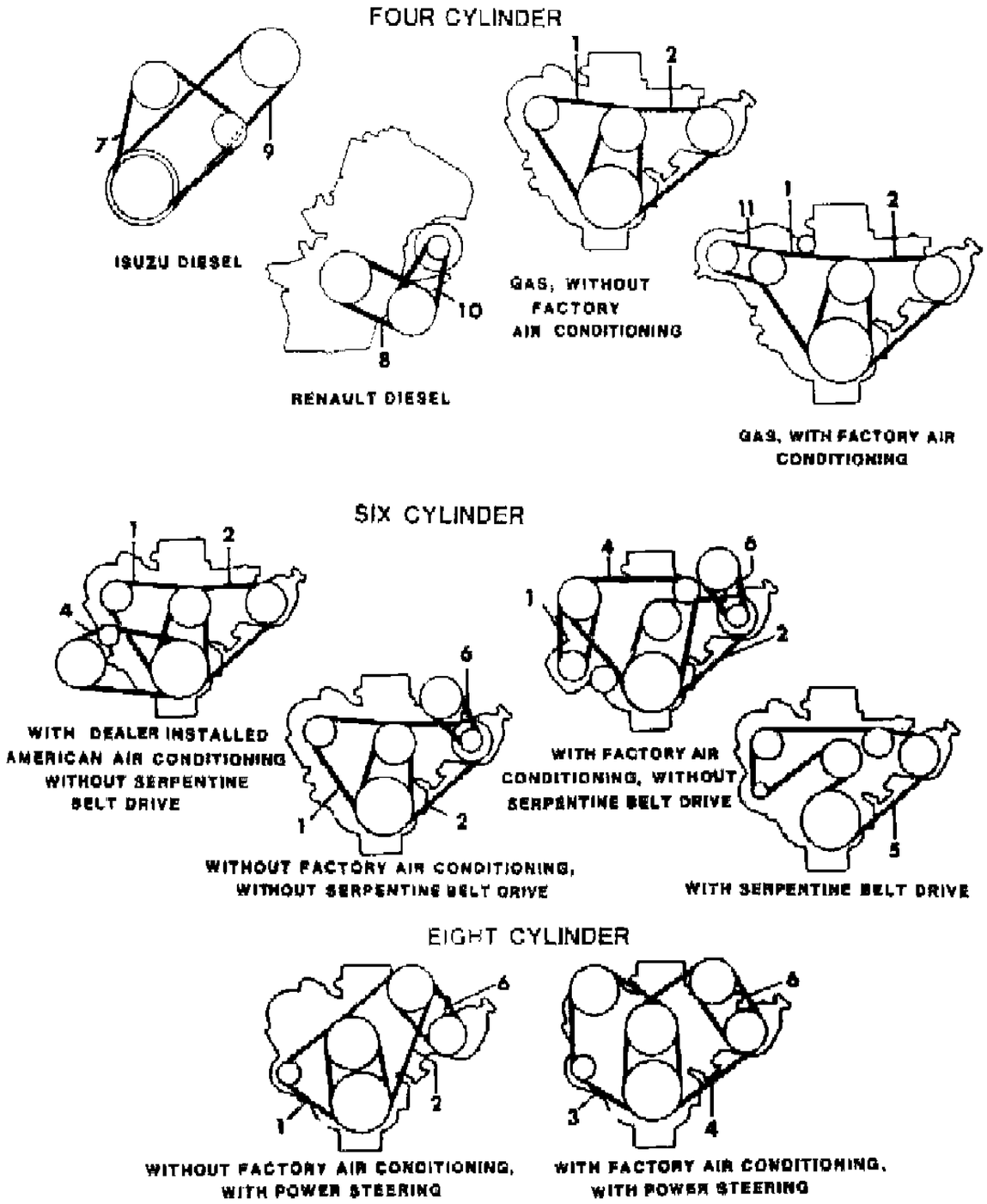

ITEM	PART NUMBER	QTY	BODY	MODEL	DESCRIPTION
	S943 3748	1			1981-83: With GM Engine, With Factory Air Conditioning ***

MODEL CODES

16=Cherokee 2 Dr.(1981-83)	78=Cherokee 4WD-4 Dr.(1984-86)	64=Comanche 2WD-6 Ft. Box(1986)	25=J-10 Truck 7 Ft. Box(1981-84)
17=Cherokee 2 Dr.(1981-83)	85=CJ-5 (1981-83)	66=Comanche 2WD-7 Ft. Box(1986)	26=J10 Truck 8 Ft. Box(1981-86)
73=Cherokee 2WD-2 Dr.(1984-86)	86=CJ-6(1981)	63=Comanche 4WD-6 Ft. Box(1986)	27=J-20 Truck 8 Ft. Box(1981-86)
74=Cherokee 2WD-4 Dr.(1984-86)	87=CJ-7(1981-86)	65=Comanche 4WD-7 Ft. Box(1986)	15=Wagoneer 4 Dr.(1981-83)
18=Cherokee 4 Dr.(1981-83)	88=CJ-8, Scrambler(1981-86)	15=Grand Wagoneer 4 Dr.(1984-86)	75=Wagoneer 4WD-4 Dr.(1984-86)
77=Cherokee 4WD-2 Dr.(1984-86)			

BODY
CJ=CJ-5, CJ-6, CJ-7, CJ-8, Scrambler(1981-86)
MJ=Comanche Pickup(1986)

STYLES
SJ=Wagoneer(1981-83), Grand Wagoneer(1984-86), Cherokee(1981-83), J-10, J-20(1981-86)
XJ=Wagoneer(1984-86), Cherokee(1984-86)

AR = Use as Required - = Non Illustrated Part P.A.R. = Paint as Required

DRIVE BELTS XJ CHEROKEE, XJ WAGONEER COMANCHE
Figure 7-2000

81J07 2000

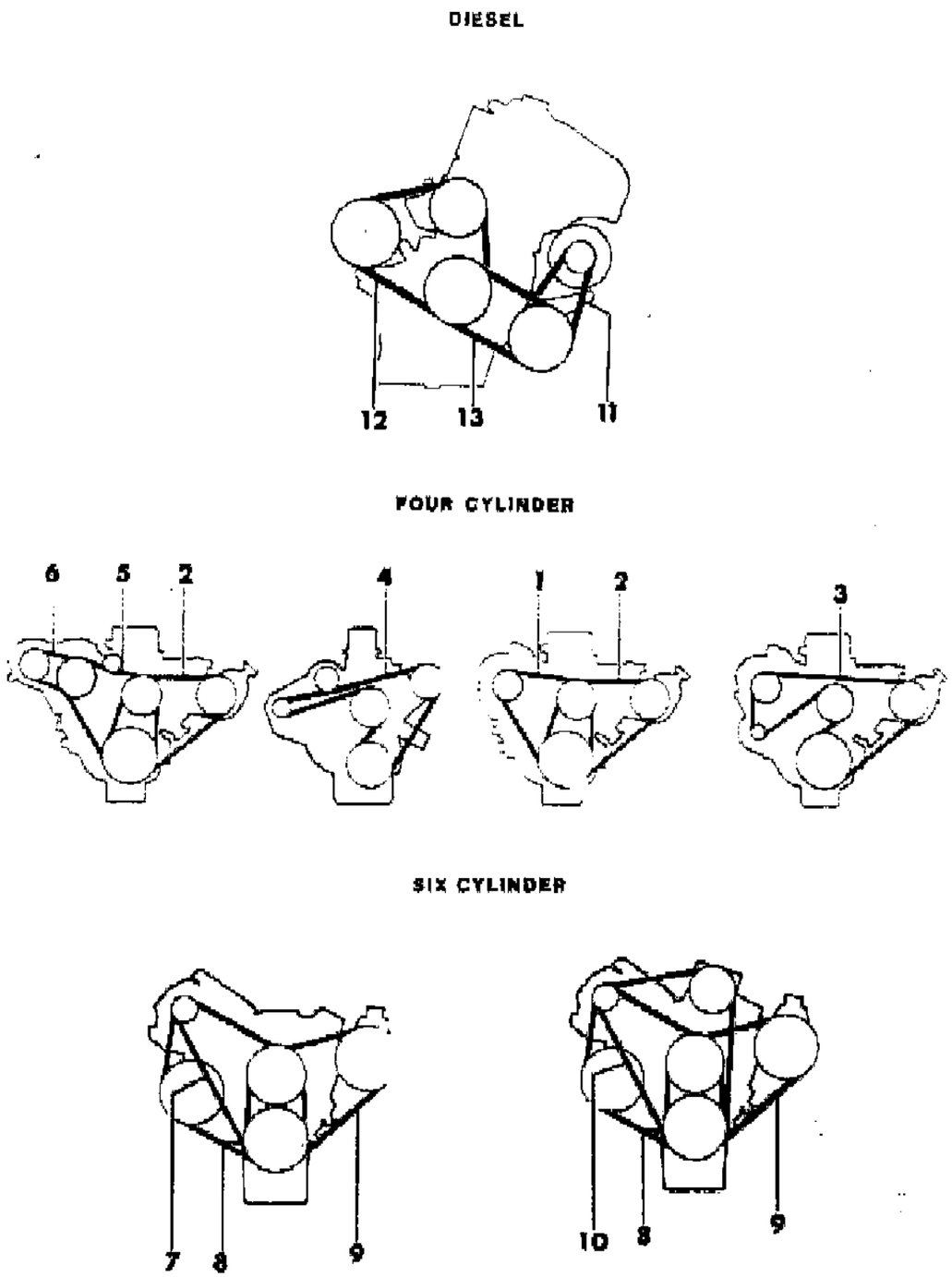

ITEM	PART NUMBER	QTY	BODY	MODEL	DESCRIPTION
1	J323 9615	1			BELT, Alternator, Without Serpentine Belt Drive
2	J322 6936	1			BELT, Power Steering, Without Serpentine Belt Drive
3	5300 1120	1			BELT, Serpentine
	5300 1120	1			BELT, Serpentine, With Factory Air Conditioning, With Dealer Installed American Air Conditioning
4	5300 2900	1			BELT, Serpentine, Without Factory Air Conditioning
5	8350 1924	1			BELT, Compressor, With Dealer Installed American Air Conditioning
6	8350 1923	1			BELT, Alternator, With American Air Conditioning
7	5300 0825	1			BELT, Alternator, Without Factory Air Conditioning
8	S943 3653	1			BELT, Air Pump
9	5300 0830	1			BELT, Power Steering
10					BELT, Compressor
	S943 3662	1			With Factory Air Conditioning
	S943 3662	1			With American Air Conditioning
11	5300 1774	1			BELT, Alternator
12					BELT, Compressor
	5300 2341	1			With Factory Air Conditioning
	8350 2594	1			With American Air Conditioning
	5300 1772	1			BELT, Idler-Fan, Without Factory Air Conditioning
13	5300 1773	1			BELT, Power Steering

MODEL CODES

16=Cherokee 2 Dr.(1981-83)	78=Cherokee 4WD-4 Dr.(1984-86)	64=Comanche 2WD-6 Ft. Box(1986)	25=J-10 Truck 7 Ft. Box(1981-84)
17=Cherokee 2 Dr.(1981-83)	85=CJ-5 (1981-83)	66=Comanche 2WD-7 Ft. Box(1986)	26=J10 Truck 8 Ft. Box(1981-86)
73=Cherokee 2WD-2 Dr.(1984-86)	86=CJ-6(1981)	63=Comanche 4WD-6 Ft. Box(1986)	27=J-20 Truck 8 Ft. Box(1981-86)
74=Cherokee 2WD-4 Dr.(1984-86)	87=CJ-7(1981-86)	65=Comanche 4WD-7 Ft. Box(1986)	15=Wagoneer 4 Dr.(1981-83)
18=Cherokee 4 Dr.(1981-83)	88=CJ-8, Scrambler(1981-86)	15=Grand Wagoneer 4 Dr.(1984-86)	75=Wagoneer 4WD-4 Dr.(1984-86)
77=Cherokee 4WD-2 Dr.(1984-86)			

BODY
CJ=CJ-5, CJ-6, CJ-7, CJ-8, Scrambler(1981-86)
MJ=Comanche Pickup(1986)

STYLES
SJ=Wagoneer(1981-83), Grand Wagoneer(1984-86), Cherokee(1981-83), J-10, J-20(1981-86)
XJ=Wagoneer(1984-86), Cherokee(1984-86)

AR = Use as Required - = Non Illustrated Part P.A.R. = Paint as Required

« RETURN TO GROUP INDEX

DRIVE BELTS SJ CHEROKEE, SJ WAGONEER J10, J20
Figure 7-2100

81J07 2100

SIX CYLINDER

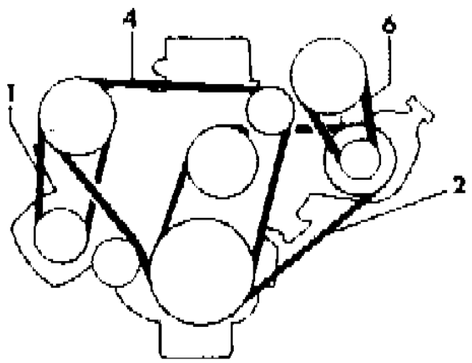

WITH FACTORY AIR CONDITIONING

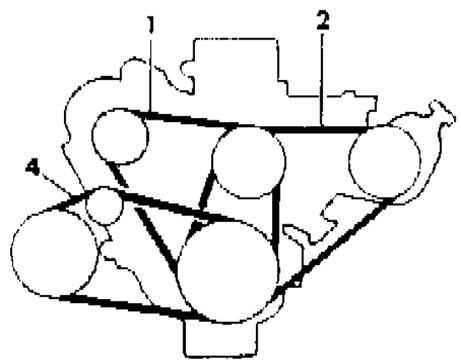

WITH DEALER INSTALLED AIR CONDITIONING

SIX CYLINDER

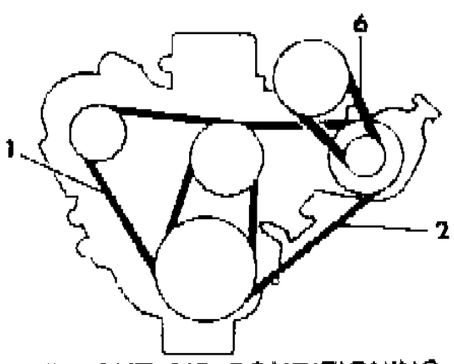

WITHOUT AIR CONDITIONING

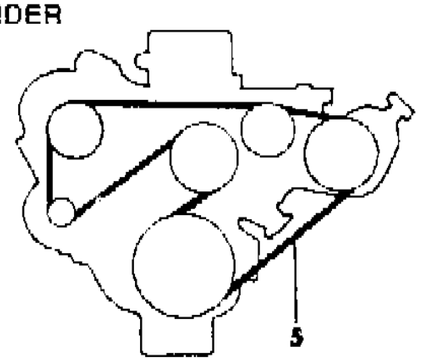

WITH SERPENTINE BELT DRIVE

EIGHT CYLINDER

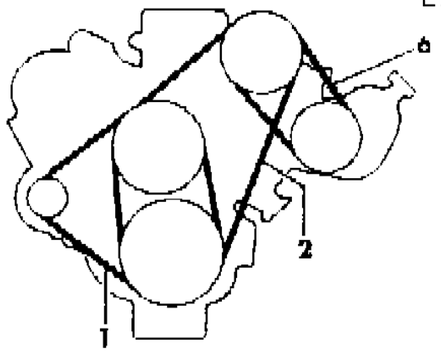

WITHOUT FACTORY AIR CONDITIONING

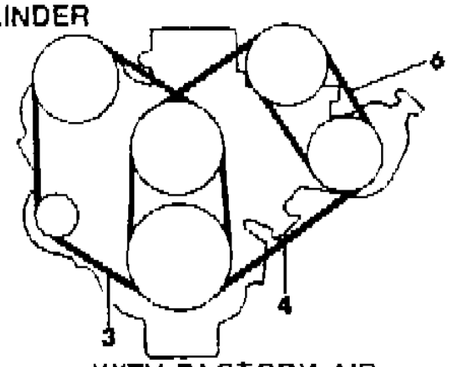

WITH FACTORY AIR CONDITIONING

ITEM	PART NUMBER	QTY	BODY	MODEL	DESCRIPTION
1					BELT, Alternator
					Six Cylinder
	J323 9615	1			Without Factory Air Conditioning, Without 85 AMP Alternator
	J323 8269	1			Without Factory Air Conditioning, With 70 AMP, 85 AMP Alternator
	J322 5356	1			With Factory Air Conditioning, Without Exhaust Emission Pump, Without Power Steering
	J322 6936	1			With Factory Air Conditioning, With Exhaust Emission Pump, With Power Steering
					Eight Cylinder Engine
	J322 7690	1			Without Factory Air Conditioning
2					BELT, Power Steering
	J322 6936	1			Six Cylinder Engine
	J322 7692	1			Eight Cylinder Engine
3					BELT SET, Alternator ***
					Eight Cylinder Engine
	J536 2181	1			Without Factory Air Conditioning, With 70 AMP, 85 AMP Alternator
	J536 2180	1			With Factory Air Conditioning, With 70 AMP, 85 AMP Alternator
	J813 1730	1			With Dealer Installed American Air Conditioning
4					BELT, Air Conditioning
					Six Cylinder Engine
	J322 5357	1			1981: With Factory Air Conditioning
	J324 1403	1			1982-86: With Factory Air Conditioning
	J322 7692	1			1981-83: With Dealer Installed American Air Conditioning
	8350 4325	1			1984-86: With Dealer Installed American Air Conditioning
					Eight Cylinder Engine
	J322 7691	1			1981-86: Without Factory Air Conditioning
	J813 1730	1			1981-86: With Dealer Installed American Air Conditioning
5					BELT, Serpentine
	J323 9591	1			1981: With Factory Air Conditioning, With Power Steering, Without 70 AMP Alternator
	J323 9595	1			1981-82: Without Factory Air Conditioning, With Power Steering, Without 70 AMP Alternator
	J323 9594	1			1981-82: Without Factory Air Conditioning, With Power Steering, Without 70 AMP Alternator
	J323 9590	1			1981-82: With Factory Air Conditioning, With Power Steering, With 70 AMP Alternator

MODEL CODES

16=Cherokee 2 Dr.(1981-83)	78=Cherokee 4WD-4 Dr.(1984-86)	64=Comanche 2WD-6 Ft. Box(1986)	25=J-10 Truck 7 Ft. Box(1981-84)
17=Cherokee 2 Dr.(1981-83)	85=CJ-5 (1981-83)	66=Comanche 2WD-7 Ft. Box(1986)	26=J10 Truck 8 Ft. Box(1981-86)
73=Cherokee 2WD-2 Dr.(1984-86)	86=CJ-6(1981)	63=Comanche 4WD-6 Ft. Box(1986)	27=J-20 Truck 8 Ft. Box(1981-86)
74=Cherokee 2WD-4 Dr.(1984-86)	87=CJ-7(1981-86)	65=Comanche 4WD-7 Ft. Box(1986)	15=Wagoneer 4 Dr.(1981-83)
18=Cherokee 4 Dr.(1981-83)	88=CJ-8, Scrambler(1981-86)	15=Grand Wagoneer 4 Dr.(1984-86)	75=Wagoneer 4WD-4 Dr.(1984-86)
77=Cherokee 4WD-2 Dr.(1984-86)			

BODY
CJ=CJ-5, CJ-6, CJ-7, CJ-8, Scrambler(1981-86)
MJ=Comanche Pickup(1986)

STYLES
SJ=Wagoneer(1981-83), Grand Wagoneer(1984-86), Cherokee(1981-83), J-10, J-20(1981-86)
XJ=Wagoneer(1984-86), Cherokee(1984-86)

AR = Use as Required - = Non Illustrated Part P.A.R. = Paint as Required

81J07 2100

SIX CYLINDER

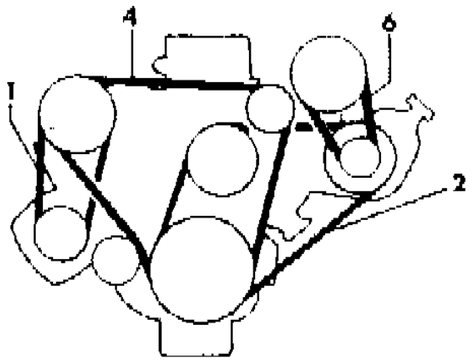

WITH FACTORY AIR CONDITIONING

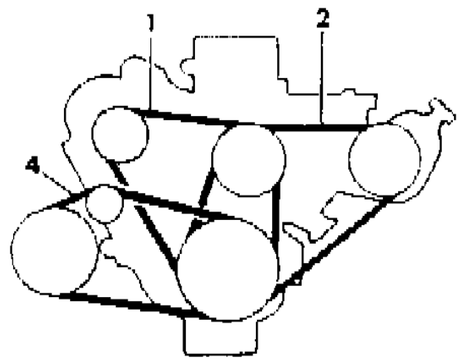

WITH DEALER INSTALLED AIR CONDITIONING

SIX CYLINDER

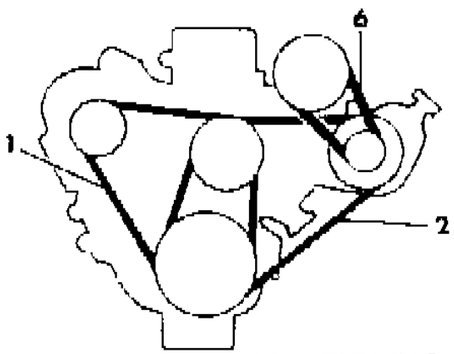

WITHOUT AIR CONDITIONING

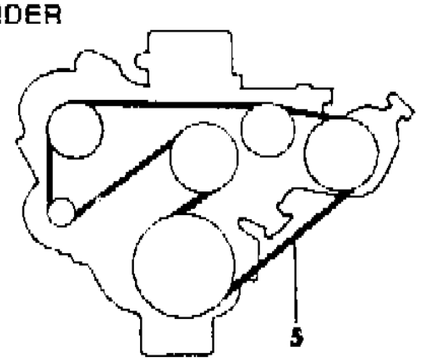

WITH SERPENTINE BELT DRIVE

EIGHT CYLINDER

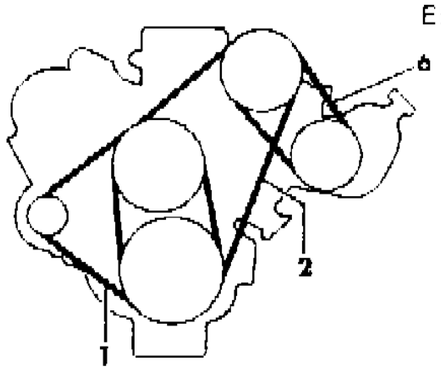

WITHOUT FACTORY AIR CONDITIONING

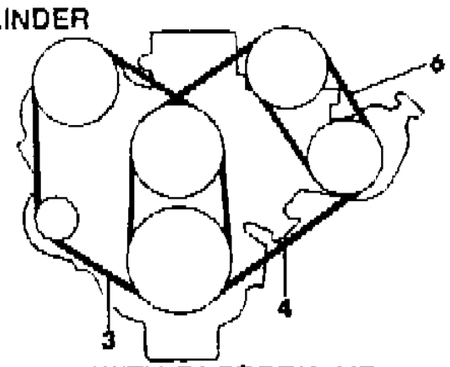

WITH FACTORY AIR CONDITIONING

ITEM	PART NUMBER	QTY	BODY	MODEL	DESCRIPTION
	J323 9591	1			1981-82: Without Factory Air Conditioning, With Power Steering, With 70 AMP Alternator
	J323 9593	1			1981-82: Without Factory Air Conditioning, Without Power Steering, With 70 AMP Alternator
	J324 1096	1			1982: With Factory Air Conditioning, With Power Steering, Without 70 AMP Alternator
	J323 9594	1			1983-86: With Power Steering, With 56-66 AMP Alternator
	3300 0558	1			1983-86: Without Power Steering
	J323 9593	1			1983-86: With Power Steering, With 70 AMP Alternator
6					BELT, Air Pump
	J322 6939	1			Six Cylinder Engine
	J322 8287	1			Eight Cylinder Engine

MODEL CODES

16=Cherokee 2 Dr.(1981-83)
17=Cherokee 2 Dr.(1981-83)
73=Cherokee 2WD-2 Dr.(1984-86)
74=Cherokee 2WD-4 Dr.(1984-86)
18=Cherokee 4 Dr.(1981-83)
77=Cherokee 4WD-2 Dr.(1984-86)
78=Cherokee 4WD-4 Dr.(1984-86)
85=CJ-5 (1981-83)
86=CJ-6(1981)
87=CJ-7(1981-86)
88=CJ-8, Scrambler(1981-86)
64=Comanche 2WD-6 Ft. Box(1986)
66=Comanche 2WD-7 Ft. Box(1986)
63=Comanche 4WD-6 Ft. Box(1986)
65=Comanche 4WD-7 Ft. Box(1986)
15=Grand Wagoneer 4 Dr.(1984-86)
25=J-10 Truck 7 Ft. Box(1981-84)
26=J10 Truck 8 Ft. Box(1981-86)
27=J-20 Truck 8 Ft. Box(1981-86)
15=Wagoneer 4 Dr.(1981-83)
75=Wagoneer 4WD-4 Dr.(1984-86)

BODY
CJ=CJ-5, CJ-6, CJ-7, CJ-8, Scrambler(1981-86)
MJ=Comanche Pickup(1986)

STYLES
SJ=Wagoneer(1981-83), Grand Wagoneer(1984-86), Cherokee(1981-83), J-10, J-20(1981-86)
XJ=Wagoneer(1984-86), Cherokee(1984-86)

AR = Use as Required - = Non Illustrated Part P.A.R. = Paint as Required

DRIVE PULLEYS CJ-5,6,7,8, SCRAMBLER
Figure 7-2200

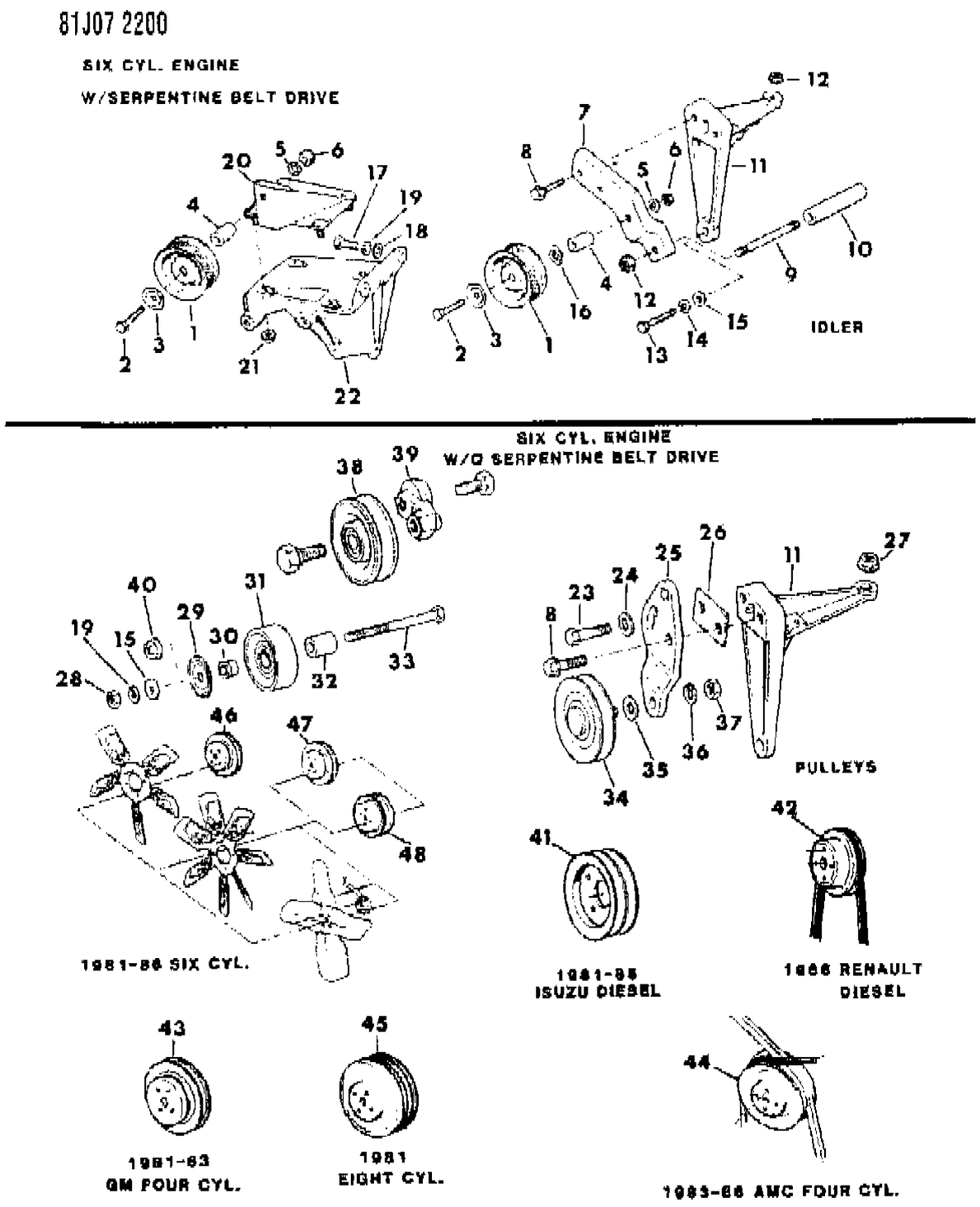

ITEM	PART NUMBER	QTY	BODY	MODEL	DESCRIPTION
1	J323 9821	1			PULLEY, Idler
2	J042 7571	1			BOLT
3	J323 9495	1			SHIELD
4	J400 6738	1			SPACER
5	J012 0383	1			WASHER, Lock
6	J027 2122	1			NUT
7	3300 0542	1			BRACKET, Idler
8	J027 3776	AR			BOLT
9	J420 0424	1			STUD
10	J400 6987	1			SPACER
11					BRACKET, Idler
	J323 8268	1			1981-82
	J324 2191	1			1983-86
12	J400 4005	2			NUT
13	J018 0126	1			BOLT
14	J012 0382	1			WASHER, Lock
15	J400 1104	1			WASHER
16	J400 4687	1			WASHER
17	J018 0123	4			BOLT
18	J400 1102	4			WASHER
19	J400 3803	AR			WASHER, Lock
20	3300 0450	1			BRACKET, Idler, Without Factory Air Conditioning
21	J400 3909	4			NUT
22	J323 7579	1			BRACKET, Idler, Without Factory Air Conditioning
23	J400 4100	1			BOLT
24	J400 5390	1			WASHER
25					BRACKET, Idler
	J322 4472	1			With Factory Air Conditioning
	J812 6186	1			With Dealer Installed American Air Conditioning
26	J322 4473	1			SPACER
27	J400 4563	1			NUT
28	J012 0377	1			NUT, Hex
29	J324 1090	1			SHIELD
30	J324 1039	1			BUSHING
31	J324 1406	1			PULLEY, Idler
32	J400 6949	1			SPACER
33	J018 9295	1			BOLT
34	J321 7201	1			PULLEY, Idler
35	J400 1289	1			SPACER

MODEL CODES

16=Cherokee 2 Dr.(1981-83)
17=Cherokee 2 Dr.(1981-83)
73=Cherokee 2WD-2 Dr.(1984-86)
74=Cherokee 2WD-4 Dr.(1984-86)
18=Cherokee 4 Dr.(1981-83)
77=Cherokee 4WD-2 Dr.(1984-86)
78=Cherokee 4WD-4 Dr.(1984-86)
85=CJ-5 (1981-83)
86=CJ-6(1981)
87=CJ-7(1981-86)
88=CJ-8, Scrambler(1981-86)
64=Comanche 2WD-6 Ft. Box(1986)
66=Comanche 2WD-7 Ft. Box(1986)
63=Comanche 4WD-6 Ft. Box(1986)
65=Comanche 4WD-7 Ft. Box(1986)
15=Grand Wagoneer 4 Dr.(1984-86)
25=J-10 Truck 7 Ft. Box(1981-84)
26=J10 Truck 8 Ft. Box(1981-86)
27=J-20 Truck 8 Ft. Box(1981-86)
15=Wagoneer 4 Dr.(1981-83)
75=Wagoneer 4WD-4 Dr.(1984-86)

BODY
CJ=CJ-5, CJ-6, CJ-7, CJ-8, Scrambler(1981-86)
MJ=Comanche Pickup(1986)

STYLES
SJ=Wagoneer(1981-83), Grand Wagoneer(1984-86), Cherokee(1981-83), J-10, J-20(1981-86)
XJ=Wagoneer(1984-86), Cherokee(1984-86)

AR = Use as Required - = Non Illustrated Part P.A.R. = Paint as Required

« RETURN TO GROUP INDEX »

DRIVE PULLEYS CJ-5,6,7,8, SCRAMBLER
Figure 7-2200

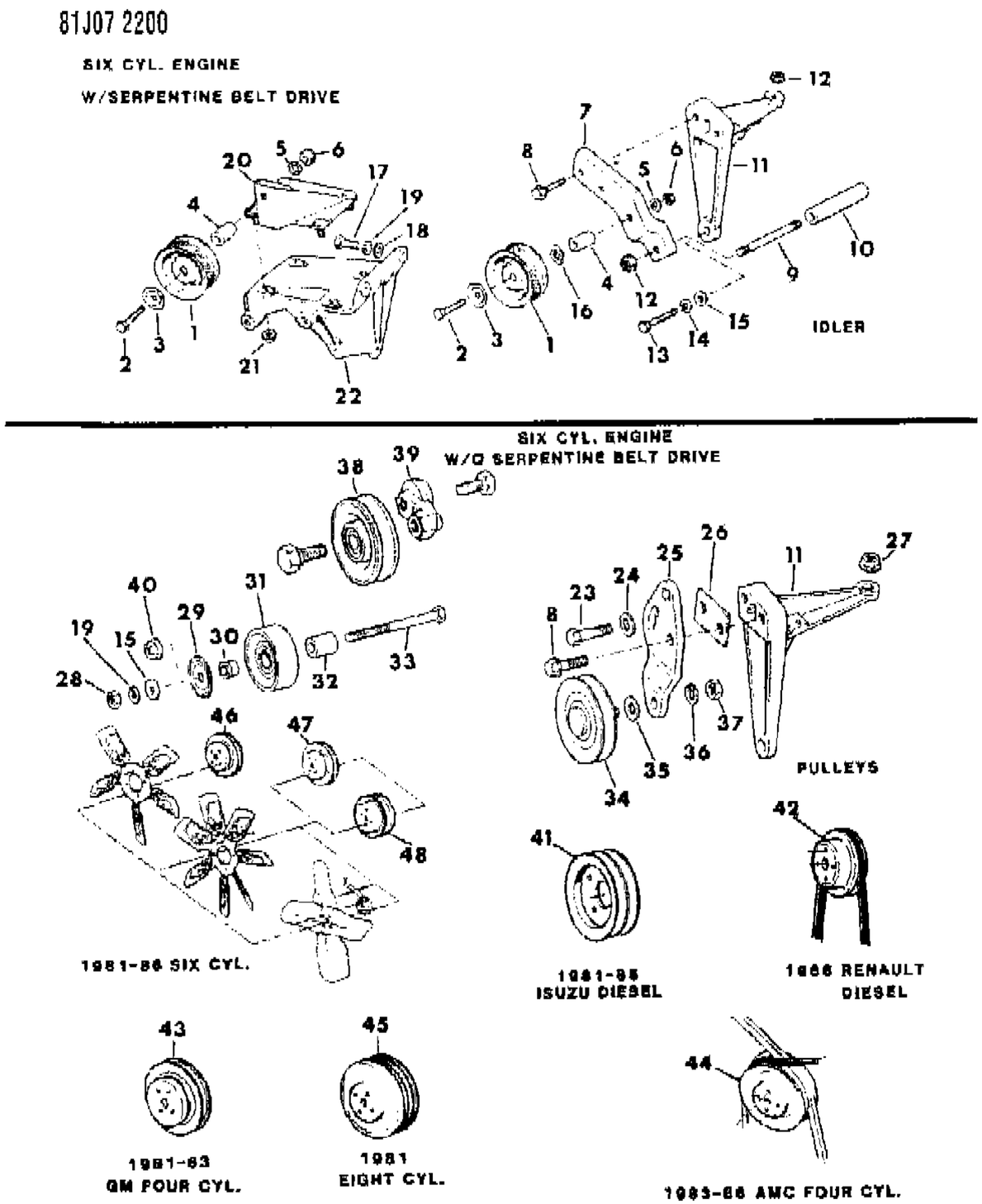

ITEM	PART NUMBER	QTY	BODY	MODEL	DESCRIPTION
36	J400 1898	1			WASHER, Lock
37	S012 0370	1			NUT
38	J812 1949	1			PULLEY, Idler, With Dealer Installed American Air Conditioning
39	J812 6189	1			ECCENTRIC, Idler, With Dealer Installed American Air Conditioning ***
40	J400 4008	1			NUT, Flange
41	J806 0286	1			PULLEY, Coolant Pump
42	T067 4866	1			PULLEY, Coolant Pump
43	J325 0730	1			PULLEY, Coolant Pump
44	J323 6658	1			PULLEY, Coolant Pump, With Serpentine Belt Drive
45	J322 7673	1			PULLEY, Coolant Pump
46	J323 7564	1			PULLEY, Coolant Pump, With Serpentine Belt Drive
47	J323 6657	1			PULLEY, Coolant Pump, With Factory Air Conditioning, Without Serpentine Belt Drive
48					PULLEY, Coolant Pump
	J323 6658	1			Without Factory Air Conditioning, Without Serpentine Belt Drive
	J323 6658	1			With Dealer Installed American Air Conditioning, Without Serpentine Belt Drive

MODEL CODES

16=Cherokee 2 Dr.(1981-83)	78=Cherokee 4WD-4 Dr.(1984-86)	64=Comanche 2WD-6 Ft. Box(1986)	25=J-10 Truck 7 Ft. Box(1981-84)
17=Cherokee 2 Dr.(1981-83)	85=CJ-5 (1981-83)	66=Comanche 2WD-7 Ft. Box(1986)	26=J10 Truck 8 Ft. Box(1981-86)
73=Cherokee 2WD-2 Dr.(1984-86)	86=CJ-6(1981)	63=Comanche 4WD-6 Ft. Box(1986)	27=J-20 Truck 8 Ft. Box(1981-86)
74=Cherokee 2WD-4 Dr.(1984-86)	87=CJ-7(1981-86)	65=Comanche 4WD-7 Ft. Box(1986)	15=Wagoneer 4 Dr.(1981-83)
18=Cherokee 4 Dr.(1981-83)	88=CJ-8, Scrambler(1981-86)	15=Grand Wagoneer 4 Dr.(1984-86)	75=Wagoneer 4WD-4 Dr.(1984-86)
77=Cherokee 4WD-2 Dr.(1984-86)			

BODY
CJ=CJ-5, CJ-6, CJ-7, CJ-8, Scrambler(1981-86)
MJ=Comanche Pickup(1986)

STYLES
SJ=Wagoneer(1981-83), Grand Wagoneer(1984-86), Cherokee(1981-83), J-10, J-20(1981-86)
XJ=Wagoneer(1984-86), Cherokee(1984-86)

AR = Use as Required - = Non Illustrated Part P.A.R. = Paint as Required

« RETURN TO GROUP INDEX

DRIVE PULLEYS XJ CHEROKEE, XJ WAGONEER, COMANCHE
Figure 7-2300

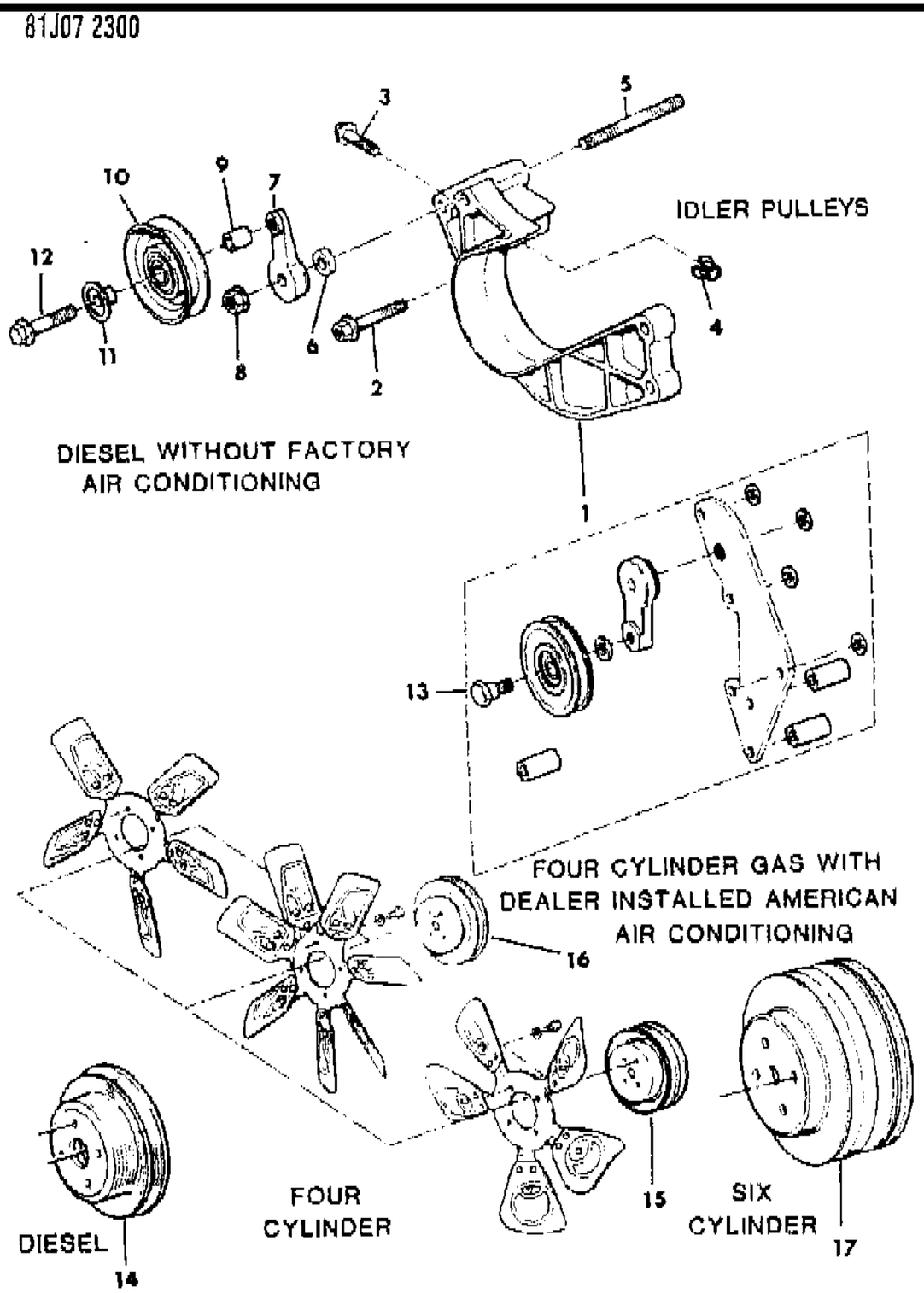

ITEM	PART NUMBER	QTY	BODY	MODEL	DESCRIPTION
1	5300 1771	1			BRACKET, Idler
2	3420 2047	1			BOLT
3	3420 1869	1			BOLT
4	5300 0548	1			SPACER
5	3420 1743	1			STUD
6	3420 2053	1			SPACER
7	J324 0576	1			ECCENTRIC, Idler ***
8	J420 0081	1			NUT
9	3420 2054	1			SPACER
10	J324 0577	1			PULLEY, Idler
11	3300 2201	1			BUSHING
12	3420 2060	1			BOLT
13	8350 1857	1			PULLEY PACKAGE, Idler ***
14	T072 5803	1			PULLEY, Coolant Pump, Diesel
15	J323 6658	1			PULLEY, Coolant Pump, Without Serpentine Belt Drive
16	J323 7564	1			PULLEY, Coolant Pump, With Serpentine Belt Drive
17	5300 1145	1			PULLEY, Coolant Pump

MODEL CODES

16=Cherokee 2 Dr.(1981-83)
17=Cherokee 2 Dr.(1981-83)
73=Cherokee 2WD-2 Dr.(1984-86)
74=Cherokee 2WD-4 Dr.(1984-86)
18=Cherokee 4 Dr.(1981-83)
77=Cherokee 4WD-2 Dr.(1984-86)
78=Cherokee 4WD-4 Dr.(1984-86)
85=CJ-5 (1981-83)
86=CJ-6(1981)
87=CJ-7(1981-86)
88=CJ-8, Scrambler(1981-86)
64=Comanche 2WD-6 Ft. Box(1986)
66=Comanche 2WD-7 Ft. Box(1986)
63=Comanche 4WD-6 Ft. Box(1986)
65=Comanche 4WD-7 Ft. Box(1986)
15=Grand Wagoneer 4 Dr.(1984-86)
25=J-10 Truck 7 Ft. Box(1981-84)
26=J10 Truck 8 Ft. Box(1981-86)
27=J-20 Truck 8 Ft. Box(1981-86)
15=Wagoneer 4 Dr.(1981-83)
75=Wagoneer 4WD-4 Dr.(1984-86)

BODY
CJ=CJ-5, CJ-6, CJ-7, CJ-8, Scrambler(1981-86)
MJ=Comanche Pickup(1986)

STYLES
SJ=Wagoneer(1981-83), Grand Wagoneer(1984-86), Cherokee(1981-83), J-10, J-20(1981-86)
XJ=Wagoneer(1984-86), Cherokee(1984-86)

AR = Use as Required - = Non Illustrated Part P.A.R. = Paint as Required

« RETURN TO GROUP INDEX

DRIVE PULLEYS SJ CHEROKEE, SJ WAGONEER, J10, J20
Figure 7-2400

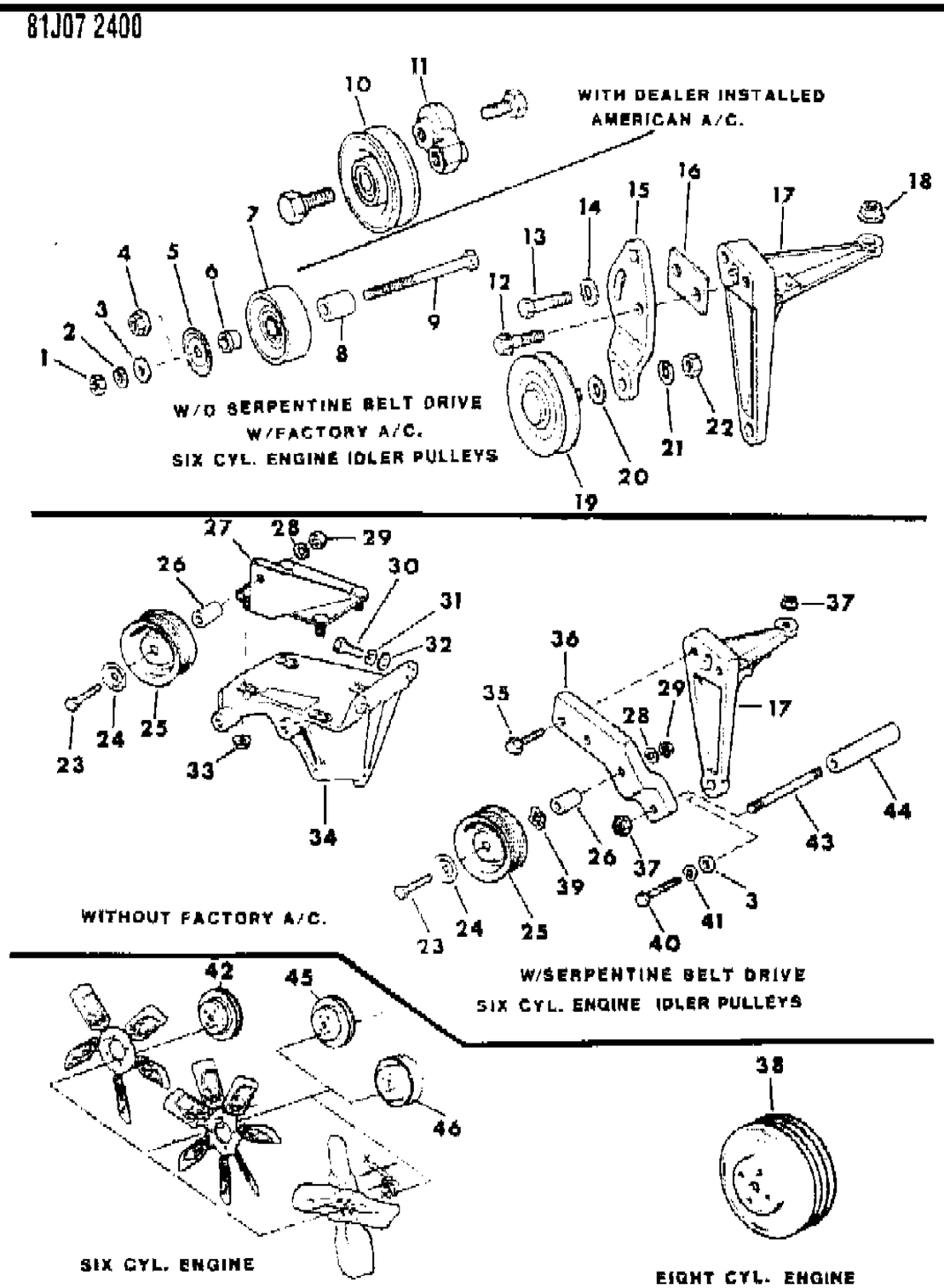

ITEM	PART NUMBER	QTY	BODY	MODEL	DESCRIPTION
1	J012 0377	1			NUT, Hex
2	J400 3803	1			WASHER, Lock
3	J400 1104	1			WASHER, Flat
4	J400 4008	1			NUT, Flange
5	J324 1090	1			SHIELD
6	J324 1039	1			BUSHING
7	J324 1406	1			PULLEY, Idler
8	J400 6949	1			SPACER
9	J018 9295	1			BOLT
10	J812 1949	1			PULLEY, Idler
11	J812 6189	1			ECCENTRIC, Idler ***
12	J027 3776	1			BOLT
13	J400 4100	1			BOLT
14	J400 5390	1			WASHER
15					BRACKET, Idler
	J322 4472	1			With Factory Air Conditioning
	J812 6186	1			With Dealer Installed American Air Conditioning
16	J322 4473	1			SPACER
17					BRACKET, Idler
	J323 8268	1			1981-82
	J324 2191	1			1983-86
18	J400 4563	1			NUT
19					PULLEY, Idler
	J321 7201	1			With Factory Air Conditioning
	J812 1949	1			With Dealer Installed American Air Conditioning
20	J400 1289	1			SPACER
21	J400 1898	1			WASHER, Lock
22	S012 0370	1			NUT
23	J042 7571	1			BOLT
24	J323 9495	1			SHIELD
25	J323 9821	1			PULLEY, Idler
26	J400 6738	1			SPACER
27	3300 0450	1			BRACKET, Idler
28	J012 0383	1			WASHER, Lock
29	J027 2122	1			NUT
30	J018 0123	4			BOLT
31	J400 3803	4			WASHER, Lock
32	J400 1102	4			WASHER
33	J400 3909	4			NUT

MODEL CODES

16=Cherokee 2 Dr.(1981-83)	78=Cherokee 4WD-4 Dr.(1984-86)	64=Comanche 2WD-6 Ft. Box(1986)	25=J-10 Truck 7 Ft. Box(1981-84)
17=Cherokee 2 Dr.(1981-83)	85=CJ-5 (1981-83)	66=Comanche 2WD-7 Ft. Box(1986)	26=J10 Truck 8 Ft. Box(1981-86)
73=Cherokee 2WD-2 Dr.(1984-86)	86=CJ-6(1981)	63=Comanche 4WD-6 Ft. Box(1986)	27=J-20 Truck 8 Ft. Box(1981-86)
74=Cherokee 2WD-4 Dr.(1984-86)	87=CJ-7(1981-86)	65=Comanche 4WD-7 Ft. Box(1986)	15=Wagoneer 4 Dr.(1981-83)
18=Cherokee 4 Dr.(1981-83)	88=CJ-8, Scrambler(1981-86)	15=Grand Wagoneer 4 Dr.(1984-86)	75=Wagoneer 4WD-4 Dr.(1984-86)
77=Cherokee 4WD-2 Dr.(1984-86)			

BODY
CJ=CJ-5, CJ-6, CJ-7, CJ-8, Scrambler(1981-86)
MJ=Comanche Pickup(1986)

STYLES
SJ=Wagoneer(1981-83), Grand Wagoneer(1984-86), Cherokee(1981-83), J-10, J-20(1981-86)
XJ=Wagoneer(1984-86), Cherokee(1984-86)

AR = Use as Required - = Non Illustrated Part P.A.R. = Paint as Required

« RETURN TO GROUP INDEX »

DRIVE PULLEYS SJ CHEROKEE, SJ WAGONEER, J10, J20
Figure 7-2400

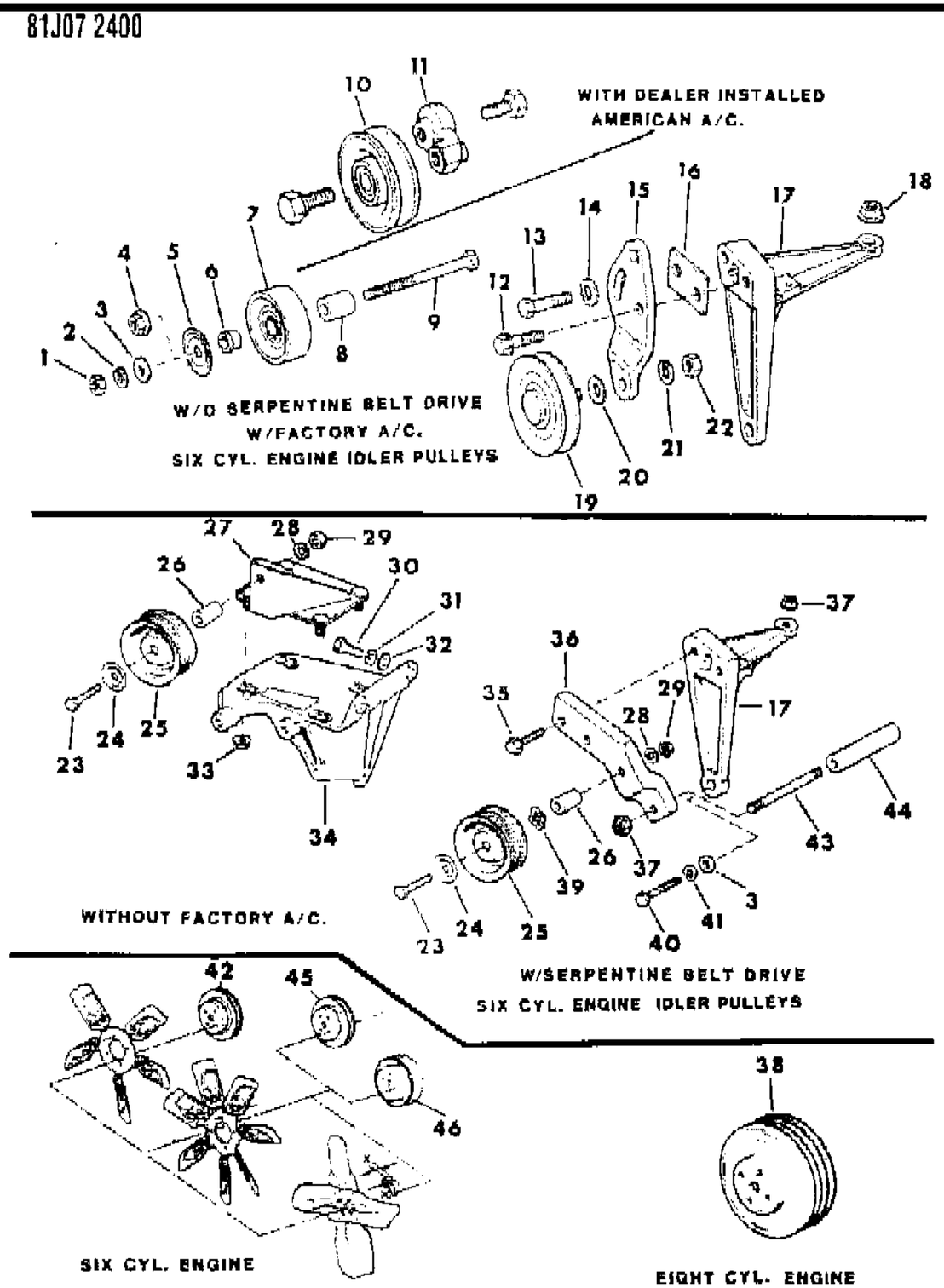

ITEM	PART NUMBER	QTY	BODY	MODEL	DESCRIPTION
34	J323 7579	1			BRACKET, Idler
35	J027 3776	2			BOLT
36	3300 0542	1			BRACKET, Idler
37	J400 4005	2			NUT
38	J322 7673	1			PULLEY, Coolant Pump
39	J400 4687	1			WASHER
40	J018 0126	1			BOLT
41	J012 0382	1			WASHER, Lock
42	J323 7564	1			PULLEY, Coolant Pump, With Serpentine Belt Drive
43	J420 0424	1			STUD
44	J400 6987	1			SPACER
45	J323 6657	1			PULLEY, Coolant Pump, With Factory Air Conditioning, Without Serpentine Belt Drive
46					PULLEY, Coolant Pump, Without Serpentine Belt Drive
	J323 6658	1			Without Factory Air Conditioning
	J321 6658	1			With Dealer Installed American Air Conditioning

MODEL CODES

16=Cherokee 2 Dr.(1981-83)	78=Cherokee 4WD-4 Dr.(1984-86)	64=Comanche 2WD-6 Ft. Box(1986)	25=J-10 Truck 7 Ft. Box(1981-84)
17=Cherokee 2 Dr.(1981-83)	85=CJ-5 (1981-83)	66=Comanche 2WD-7 Ft. Box(1986)	26=J10 Truck 8 Ft. Box(1981-86)
73=Cherokee 2WD-2 Dr.(1984-86)	86=CJ-6(1981)	63=Comanche 4WD-6 Ft. Box(1986)	27=J-20 Truck 8 Ft. Box(1981-86)
74=Cherokee 2WD-4 Dr.(1984-86)	87=CJ-7(1981-86)	65=Comanche 4WD-7 Ft. Box(1986)	15=Wagoneer 4 Dr.(1981-83)
18=Cherokee 4 Dr.(1981-83)	88=CJ-8, Scrambler(1981-86)	15=Grand Wagoneer 4 Dr.(1984-86)	75=Wagoneer 4WD-4 Dr.(1984-86)
77=Cherokee 4WD-2 Dr.(1984-86)			

BODY
CJ=CJ-5, CJ-6, CJ-7, CJ-8, Scrambler(1981-86)
MJ=Comanche Pickup(1986)

STYLES
SJ=Wagoneer(1981-83), Grand Wagoneer(1984-86), Cherokee(1981-83), J-10, J-20(1981-86)
XJ=Wagoneer(1984-86), Cherokee(1984-86)

AR = Use as Required - = Non Illustrated Part P.A.R. = Paint as Required

« RETURN TO GROUP INDEX

WATER PUMP AND RELATED PARTS CJ-5,6,7,8, SCRAMBLER
Figure 7-2500

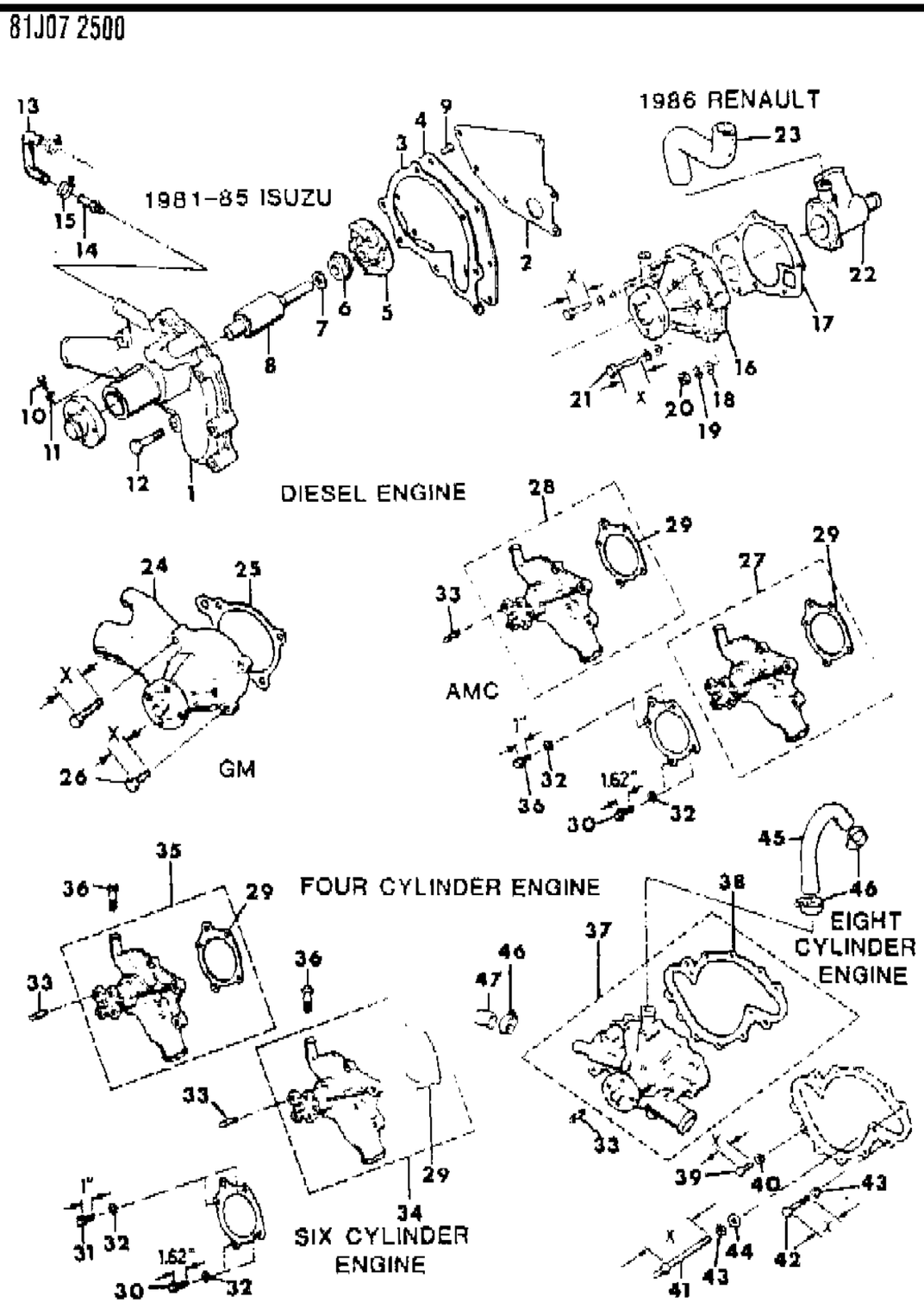

ITEM	PART NUMBER	QTY	BODY	MODEL	DESCRIPTION
1	J806 0278	1			PUMP PACKAGE, Coolant ***
2	J806 0281	1			GASKET
3	J806 0280	1			GASKET
4	J806 0279	1			COVER
5	J806 0283	1			IMPELLER, Water Pump ***
6	J806 0282	1			SEAL
7	J806 0285	1			SLINGER ***
8	J806 0284	1			SHAFT, Pump
9	J806 0035	AR			BOLT
10	J806 0129	1			BOLT
11	J806 0064	1			WASHER
12					BOLT
	J806 0050	4			47mm
	J806 0051	2			57mm
13	J806 0294	1			HOSE
14	J806 0140	1			CONNECTOR
15	J806 0148	2			CLAMP
16					PUMP PACKAGE, Coolant ***
	JR77 5056	1			Remanufactured
	T146 1336	1			EXPORT
17	T134 9446	1			GASKET
18	T305 3074	14			WASHER, Flat
19	T305 5031	14			WASHER, Lock
20	T303 2012	2			NUT
21					BOLT
	T300 1123	4			40mm
	J300 1607	2			45mm
22	T070 8399	1			HOUSING
23	T066 1636	1			HOSE
24					PUMP PACKAGE, Coolant ***
	JR77 5045	1			Remanufactured
	J813 2274	1			EXPORT
25	J813 2275	1			GASKET
26					BOLT
					1981-82
	1150 0817	2			25mm
	J813 2353	2			40mm
					1983
	1150 0918	2			25mm

MODEL CODES
16=Cherokee 2 Dr.(1981-83)
17=Cherokee 2 Dr.(1981-83)
73=Cherokee 2WD-2 Dr.(1984-86)
74=Cherokee 2WD-4 Dr.(1984-86)
18=Cherokee 4 Dr.(1981-83)
77=Cherokee 4WD-2 Dr.(1984-86)
78=Cherokee 4WD-4 Dr.(1984-86)
85=CJ-5 (1981-83)
86=CJ-6(1981)
87=CJ-7(1981-86)
88=CJ-8, Scrambler(1981-86)
64=Comanche 2WD-6 Ft. Box(1986)
66=Comanche 2WD-7 Ft. Box(1986)
63=Comanche 4WD-6 Ft. Box(1986)
65=Comanche 4WD-7 Ft. Box(1986)
15=Grand Wagoneer 4 Dr.(1984-86)
25=J-10 Truck 7 Ft. Box(1981-84)
26=J10 Truck 8 Ft. Box(1981-86)
27=J-20 Truck 8 Ft. Box(1981-86)
15=Wagoneer 4 Dr.(1981-83)
75=Wagoneer 4WD-4 Dr.(1984-86)

BODY
CJ=CJ-5, CJ-6, CJ-7, CJ-8, Scrambler(1981-86)
MJ=Comanche Pickup(1986)

STYLES
SJ=Wagoneer(1981-83), Grand Wagoneer(1984-86), Cherokee(1981-83), J-10, J-20(1981-86)
XJ=Wagoneer(1984-86), Cherokee(1984-86)

AR = Use as Required - = Non Illustrated Part P.A.R. = Paint as Required

WATER PUMP AND RELATED PARTS CJ-5,6,7,8, SCRAMBLER
Figure 7-2500

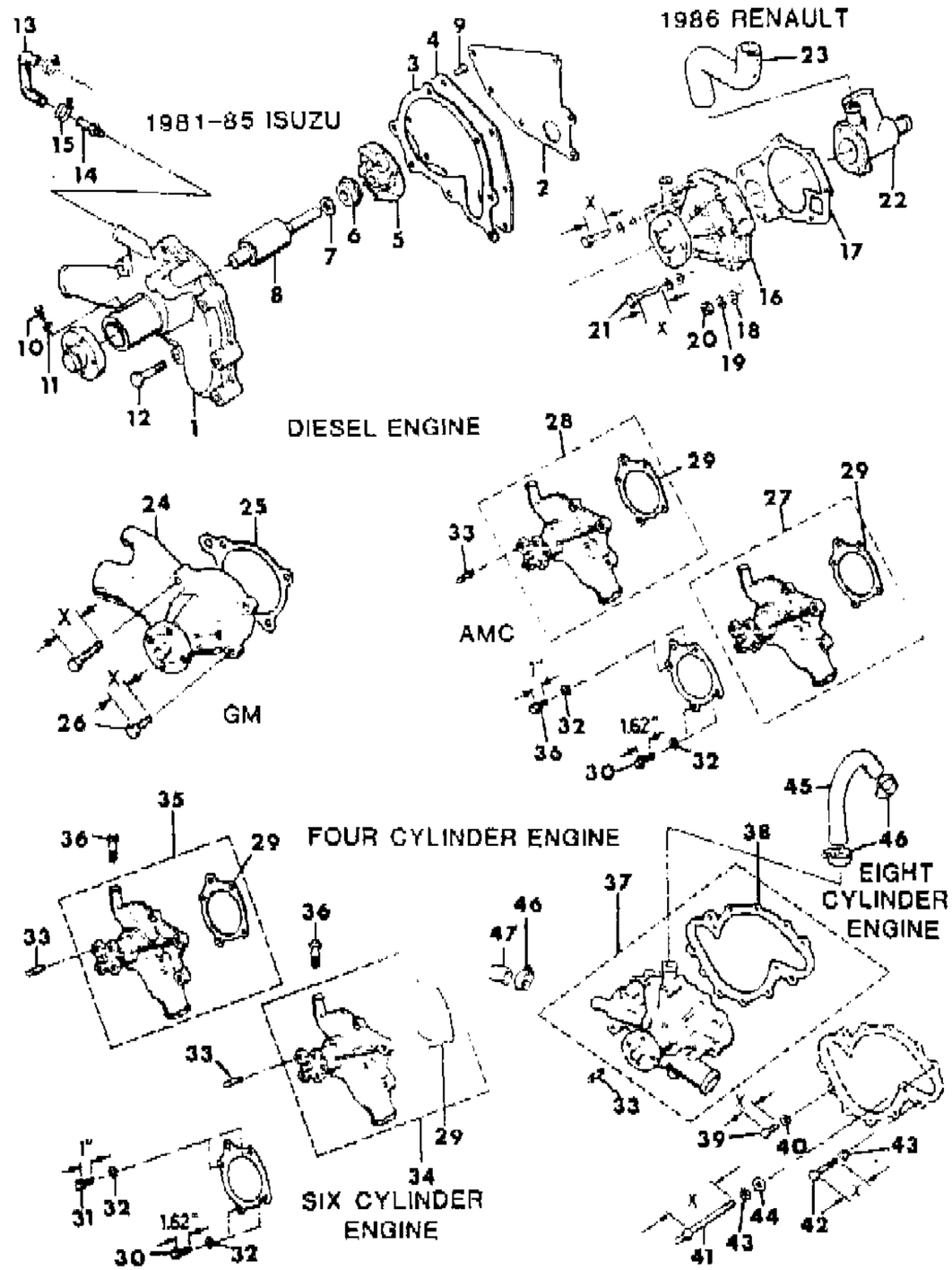

ITEM	PART NUMBER	QTY	BODY	MODEL	DESCRIPTION
	1150 0921	2			40mm
27					PUMP PACKAGE, Coolant, Without Serpentine Belt Drive ***
	JR77 5046	1			Remanufactured
	J813 4320	1			EXPORT
28					PUMP PACKAGE, Coolant, With Serpentine Belt Drive ***
	JR77 5047	1			Remanufactured
	J813 4321	1			EXPORT
29	J317 3204	1			GASKET
30	J400 6908	2			BOLT
31	J943 1975	2			BOLT
32	J012 0214	4			WASHER
33	J400 6714	4			STUD
34					PUMP PACKAGE, Coolant Without Serpentine Belt Drive ***
	JR77 5046	1			Remanufactured
	J813 4320	1			EXPORT
35					PUMP PACKAGE, Coolant With Serpentine Belt Drive ***
	JR77 5047	1			Remanufactured
	J813 4321	1			EXPORT
36	3200 2591	1			NIPPLE
37					PUMP PACKAGE, Coolant ***
	JR77 5050	1			Remanufactured
	J323 4427	1			EXPORT
38	J318 1899	1			GASKET
39					BOLT
	J018 0046	3			2.25"
	J017 9798	4			1.12"
40	J012 0380	7			WASHER
41	J318 5530	1			STUD
42	J018 6288	1			BOLT
43	J400 3803	2			WASHER, Lock
44	J400 1829	1			WASHER
45	J318 2494	1			HOSE
46	J320 3077	3			CLAMP
47	J316 0337	1			CAP

MODEL CODES

16=Cherokee 2 Dr.(1981-83)
17=Cherokee 2 Dr.(1981-83)
73=Cherokee 2WD-2 Dr.(1984-86)
74=Cherokee 2WD-4 Dr.(1984-86)
18=Cherokee 4 Dr.(1981-83)
77=Cherokee 4WD-2 Dr.(1984-86)
78=Cherokee 4WD-4 Dr.(1984-86)
85=CJ-5 (1981-83)
86=CJ-6(1981)
87=CJ-7(1981-86)
88=CJ-8, Scrambler(1981-86)
64=Comanche 2WD-6 Ft. Box(1986)
66=Comanche 2WD-7 Ft. Box(1986)
63=Comanche 4WD-6 Ft. Box(1986)
65=Comanche 4WD-7 Ft. Box(1986)
15=Grand Wagoneer 4 Dr.(1984-86)
25=J-10 Truck 7 Ft. Box(1981-84)
26=J10 Truck 8 Ft. Box(1981-86)
27=J-20 Truck 8 Ft. Box(1981-86)
15=Wagoneer 4 Dr.(1981-83)
75=Wagoneer 4WD-4 Dr.(1984-86)

BODY

CJ=CJ-5, CJ-6, CJ-7, CJ-8, Scrambler(1981-86)
MJ=Comanche Pickup(1986)

STYLES

SJ=Wagoneer(1981-83), Grand Wagoneer(1984-86), Cherokee(1981-83), J-10, J-20(1981-86)
XJ=Wagoneer(1984-86), Cherokee(1984-86)

AR = Use as Required - = Non Illustrated Part P.A.R. = Paint as Required

« RETURN TO GROUP INDEX

WATER PUMP AND RELATED PARTS XJ CHEROKEE, XJ WAGONEER, COMANCHE
Figure 7-2600

81J07 2600

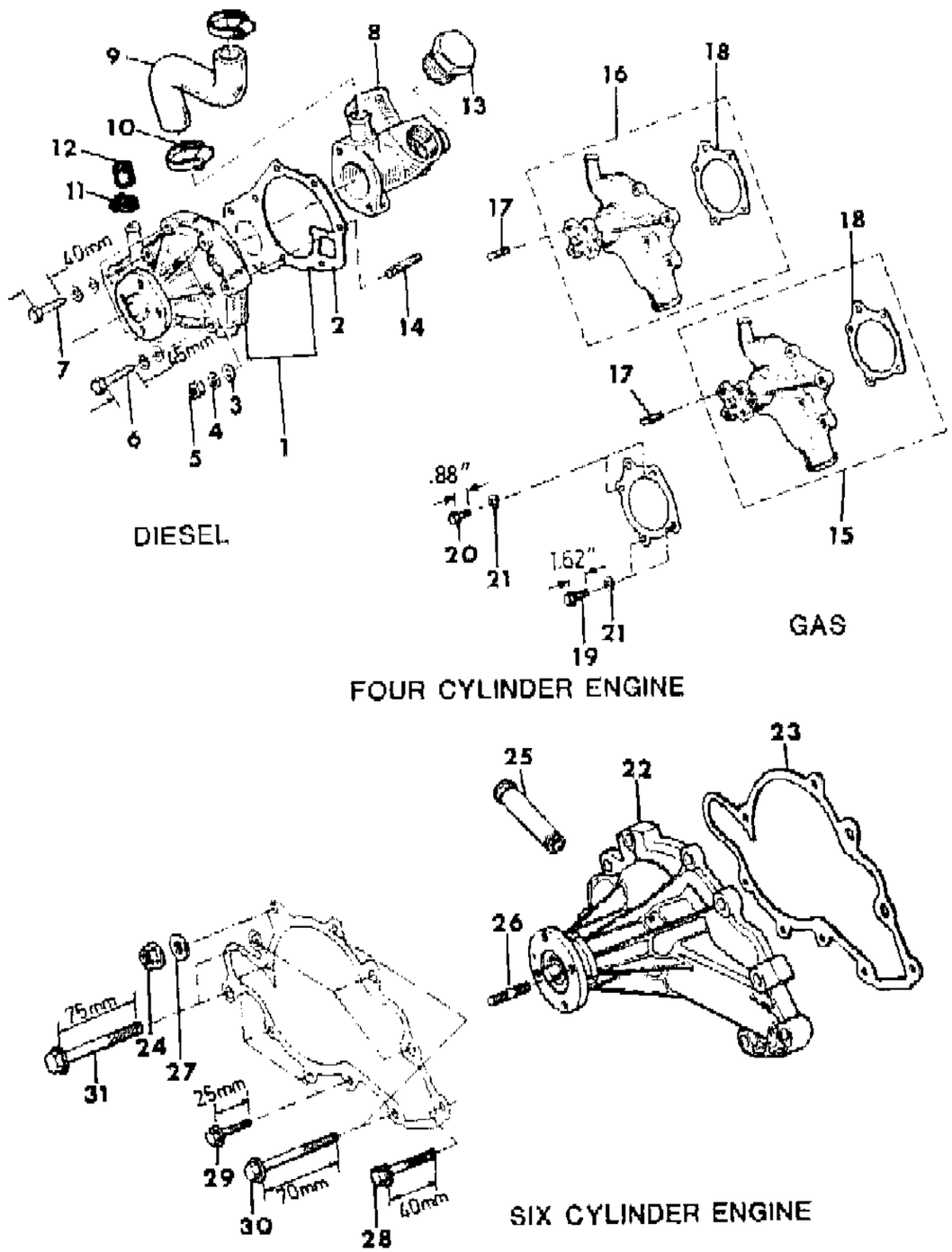

ITEM	PART NUMBER	QTY	BODY	MODEL	DESCRIPTION
1					PUMP PACKAGE, Coolant ***
	JR77 5056	1			Remanufactured
	T146 1336	1			EXPORT
2	T134 9446	1			GASKET
3	T305 3074	14			WASHER, Flat
4	T305 5031	14			WASHER, Lock
5	J303 2012	2			NUT
6	J300 1607	2			BOLT
7	T300 1123	4			BOLT
8	T071 5330	1			OUTLET, Coolant Pump ***
9	T066 1636	1			NOSE ***
10	J320 3077	2			CLAMP
11	3300 0784	1			CLAMP
12	T065 7697	1			CAP
13	T307 5133	1			PLUG
14	T302 7095	2			STUD
15					PUMP PACKAGE, Coolant ***
					Without Serpentine Belt Drive
	JR77 5046	1			Remanufactured
	J813 4320	1			EXPORT
16					PUMP PACKAGE, Coolant ***
					With Serpentine Belt Drive
	JR77 5047	1			Remanufactured
	J813 4321	1			EXPORT
17	J400 6714	4			STUD
18	J317 3204	1			GASKET
19	J400 6908	2			BOLT
20					BOLT
	J943 1975	2			1984-85
	J400 3872	2			1986
21	J012 0214	4			WASHER
22					PUMP PACKAGE, Coolant ***
	JR77 5049	1			Remanufactured
	8350 0807	1			EXPORT
23	8350 0808	1			GASKET
24	8350 0845	1			NUT
25					NIPPLE, Coolant
	8350 0776	1			1984
	8350 1490	1			1985-86

MODEL CODES
16=Cherokee 2 Dr.(1981-83)
17=Cherokee 2 Dr.(1981-83)
73=Cherokee 2WD-2 Dr.(1984-86)
74=Cherokee 2WD-4 Dr.(1984-86)
18=Cherokee 4 Dr.(1981-83)
77=Cherokee 4WD-2 Dr.(1984-86)
78=Cherokee 4WD-4 Dr.(1984-86)
85=CJ-5 (1981-83)
86=CJ-6(1981)
87=CJ-7(1981-86)
88=CJ-8, Scrambler(1981-86)
64=Comanche 2WD-6 Ft. Box(1986)
66=Comanche 2WD-7 Ft. Box(1986)
63=Comanche 4WD-6 Ft. Box(1986)
65=Comanche 4WD-7 Ft. Box(1986)
15=Grand Wagoneer 4 Dr.(1984-86)
25=J-10 Truck 7 Ft. Box(1981-84)
26=J10 Truck 8 Ft. Box(1981-86)
27=J-20 Truck 8 Ft. Box(1981-86)
15=Wagoneer 4 Dr.(1981-83)
75=Wagoneer 4WD-4 Dr.(1984-86)

BODY
CJ=CJ-5, CJ-6, CJ-7, CJ-8, Scrambler(1981-86)
MJ=Comanche Pickup(1986)

STYLES
SJ=Wagoneer(1981-83), Grand Wagoneer(1984-86), Cherokee(1981-83), J-10, J-20(1981-86)
XJ=Wagoneer(1984-86), Cherokee(1984-86)

AR = Use as Required - = Non Illustrated Part P.A.R. = Paint as Required

« RETURN TO GROUP INDEX »

WATER PUMP AND RELATED PARTS XJ CHEROKEE, XJ WAGONEER, COMANCHE
Figure 7-2600

81J07 2600

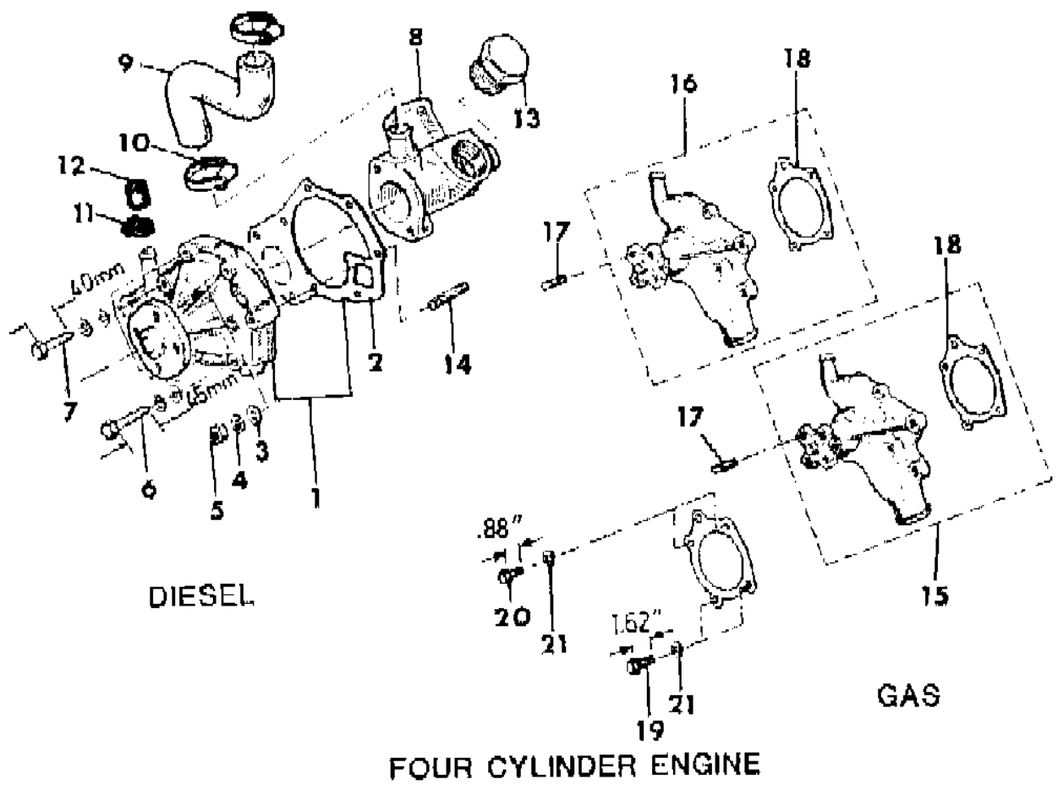

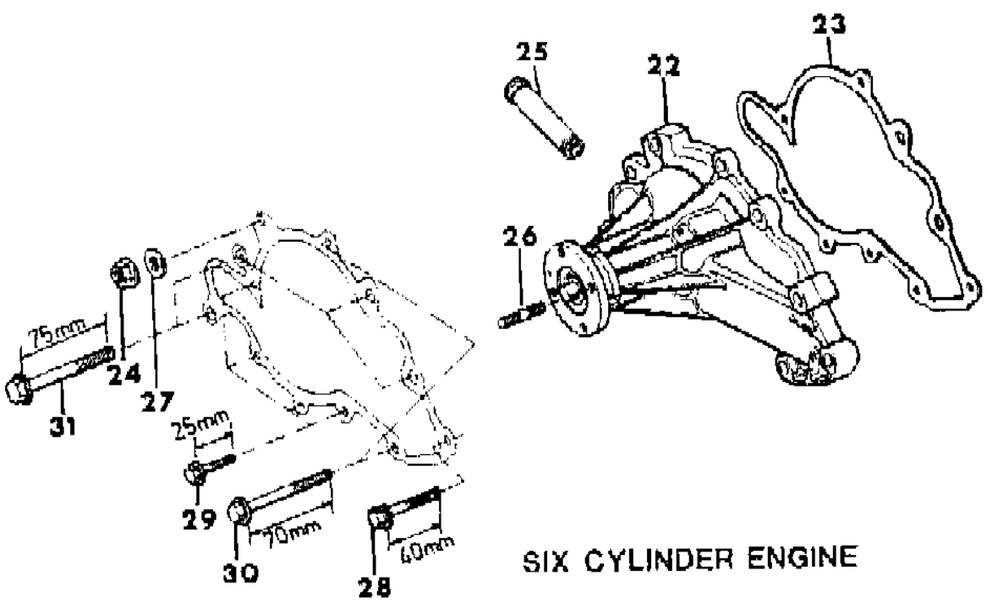

ITEM	PART NUMBER	QTY	BODY	MODEL	DESCRIPTION
26	3420 1560	4			STUD
27	J012 0386	1			WASHER
28	S150 3990	1			SCREW
29	S150 3816	4			SCREW
30	S150 3589	2			BOLT
31	S150 3590	4			BOLT

MODEL CODES

16=Cherokee 2 Dr.(1981-83)
17=Cherokee 2 Dr.(1981-83)
73=Cherokee 2WD-2 Dr.(1984-86)
74=Cherokee 2WD-4 Dr.(1984-86)
18=Cherokee 4 Dr.(1981-83)
77=Cherokee 4WD-2 Dr.(1984-86)
78=Cherokee 4WD-4 Dr.(1984-86)
85=CJ-5 (1981-83)
86=CJ-6(1981)
87=CJ-7(1981-86)
88=CJ-8, Scrambler(1981-86)
64=Comanche 2WD-6 Ft. Box(1986)
66=Comanche 2WD-7 Ft. Box(1986)
63=Comanche 4WD-6 Ft. Box(1986)
65=Comanche 4WD-7 Ft. Box(1986)
15=Grand Wagoneer 4 Dr.(1984-86)
25=J-10 Truck 7 Ft. Box(1981-84)
26=J10 Truck 8 Ft. Box(1981-86)
27=J-20 Truck 8 Ft. Box(1981-86)
15=Wagoneer 4 Dr.(1981-83)
75=Wagoneer 4WD-4 Dr.(1984-86)

BODY
CJ=CJ-5, CJ-6, CJ-7, CJ-8, Scrambler(1981-86)
MJ=Comanche Pickup(1986)

STYLES
SJ=Wagoneer(1981-83), Grand Wagoneer(1984-86), Cherokee(1981-83), J-10, J-20(1981-86)
XJ=Wagoneer(1984-86), Cherokee(1984-86)

AR = Use as Required - = Non Illustrated Part P.A.R. = Paint as Required

WATER PUMP AND RELATED PARTS SJ CHEROKEE, SJ WAGONEER, J10, J20
Figure 7-2700

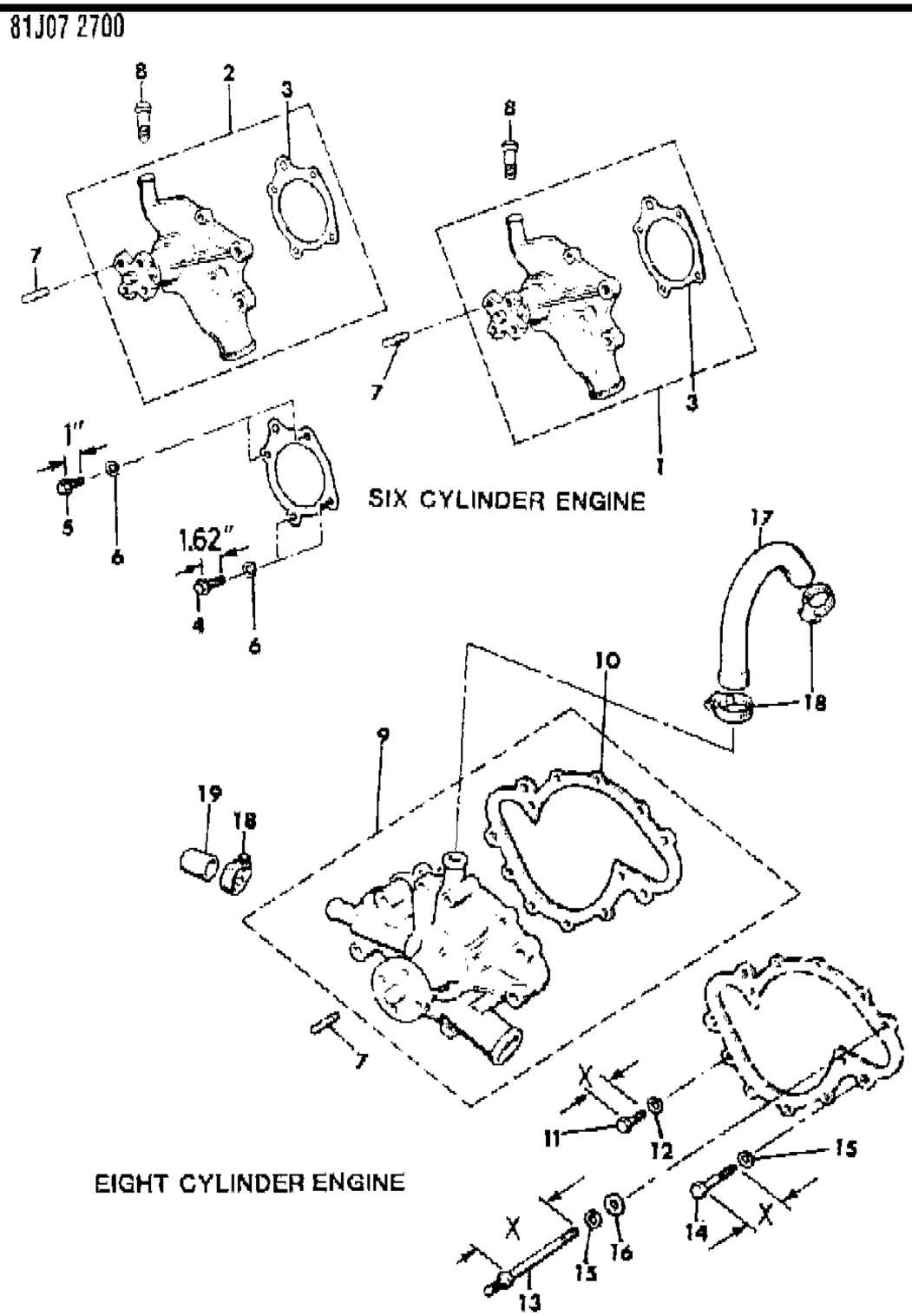

ITEM	PART NUMBER	QTY	BODY	MODEL	DESCRIPTION
1					PUMP PACKAGE, Coolant ***
					Without Serpentine Belt Drive
	JR77 5046	1			Remanufactured
	J813 4320	1			EXPORT
2					PUMP PACKAGE, Coolant ***
					With Serpentine Belt Drive
	JR77 5047	1			Remanufactured
	J813 4321	1			EXPORT
3	J317 3204	1			GASKET
4	J400 6908	2			BOLT
5	J943 1975	2			BOLT
6	J012 0214	4			WASHER
7	J400 6714	4			STUD
8	3200 2591	1			NIPPLE
9					PUMP PACKAGE, Coolant ***
	JR77 5050	1			Remanufactured
	J323 4427	1			EXPORT
10	J318 1899	1			GASKET
11					BOLT
	J018 0046	3			2.25"
	J017 9798	4			1.12"
12	J012 0380	7			WASHER
13	J318 5530	1			STUD, 6.41"
14	J018 6288	1			BOLT, 4.50"
15	J400 3803	2			WASHER, Lock
16	J400 1829	1			WASHER
17	J318 2494	1			HOSE
18	J320 3077	3			CLAMP
19	J316 0337	1			CAP

MODEL CODES

16=Cherokee 2 Dr.(1981-83)	78=Cherokee 4WD-4 Dr.(1984-86)	64=Comanche 2WD-6 Ft. Box(1986)	25=J-10 Truck 7 Ft. Box(1981-84)
17=Cherokee 2 Dr.(1981-83)	85=CJ-5 (1981-83)	66=Comanche 2WD-7 Ft. Box(1986)	26=J10 Truck 8 Ft. Box(1981-86)
73=Cherokee 2WD-2 Dr.(1984-86)	86=CJ-6(1981)	63=Comanche 4WD-6 Ft. Box(1986)	27=J-20 Truck 8 Ft. Box(1981-86)
74=Cherokee 2WD-4 Dr.(1984-86)	87=CJ-7(1981-86)	65=Comanche 4WD-7 Ft. Box(1986)	15=Wagoneer 4 Dr.(1981-83)
18=Cherokee 4 Dr.(1981-83)	88=CJ-8, Scrambler(1981-86)	15=Grand Wagoneer 4 Dr.(1984-86)	75=Wagoneer 4WD-4 Dr.(1984-86)
77=Cherokee 4WD-2 Dr.(1984-86)			

BODY
CJ=CJ-5, CJ-6, CJ-7, CJ-8, Scrambler(1981-86)
MJ=Comanche Pickup(1986)

STYLES
SJ=Wagoneer(1981-83), Grand Wagoneer(1984-86), Cherokee(1981-83), J-10, J-20(1981-86)
XJ=Wagoneer(1984-86), Cherokee(1984-86)

AR = Use as Required - = Non Illustrated Part P.A.R. = Paint as Required

« RETURN TO GROUP INDEX

ILLUSTRATION NOT AVAILABLE AT TIME OF PUBLICATION

GROUP 8 - ELECTRICAL

ILLUSTRATION TITLE	GROUP-FIG. NO.
RELAYS	
RELAYS CJ-5,6,7,8, SCRAMBLER	Fig. 8-100
RELAYS XJ CHEROKEE, XJ WAGONEER, COMANCHE	Fig. 8-200
RELAYS SJ CHEROKEE, SJ WAGONEER, J10, J20	Fig. 8-300
SWITCHES AND SENDING UNITS	
SWITCHES AND SENDING UNITS CJ-5,6,7,8, SCRAMBLER	Fig. 8-400
SWITCHES AND SENDING UNITS XJ CHEROKEE, XJ WAGONEER, COMANCHE	Fig. 8-500
SWITCHES AND SENDING UNITS SJ CHEROKEE, SJ WAGONEER, J10, J20	Fig. 8-600
SWITCHES--WINDOWS AND DOOR LOCKS XJ CHEROKEE, XJ WAGONEER, COMANCHE	Fig. 8-700
SWITCHES--WINDOWS AND DOOR LOCKS SJ CHEROKEE, SJ WAGONEER, J10, J20	Fig. 8-800
MICROPROCESSORS AND SENSORS	
MICROPROCESSORS AND OXYGEN SENSORS CJ-5,6,7,8, SCRAMBLER	Fig. 8-900
MICROPROCESSORS AND OXYGEN SENSORS XJ CHEROKEE, XJ WAGONEER, COMANCHE	Fig. 8-1000
MICROPROCESSORS AND OXYGEN SENSORS SIX CYLINDER SJ CHEROKEE, SJ WAGONEER, J10, J20	Fig. 8-1100
BATTERY TRAYS AND CABLES	
BATTERY TRAYS AND CABLES CJ-5,6,7,8, SCRAMBLER	Fig. 8-1200
BATTERY TRAYS AND CABLES XJ CHEROKEE, XJ WAGONEER, COMANCHE	Fig. 8-1300
BATTERY TRAYS AND CABLES SIX CYLINDER WITH BOTTOM CLAMP SJ CHEROKEE, SJ WAGONEER, J10, J20	Fig. 8-1400
BATTERY TRAYS AND CABLES EIGHT CYLINDER WITH BOTTOM CLAMP SJ CHEROKEE, SJ WAGONEER, J10, J20	Fig. 8-1500
BATTERY TRAYS AND CABLES 1986 TOP HOLD DOWN SJ WAGONEER, J10, J20	Fig. 8-1600
BATTERY TRAYS AND CABLES EXPORT--RIGHT HAND DRIVE SJ CHEROKEE, SJ WAGONEER, J10, J20	Fig. 8-1700
DISTRIBUTORS	
DISTRIBUTOR 1981 GM FOUR CYLINDER CJ-5,6,7,8, SCRAMBLER	Fig. 8-1800
DISTRIBUTOR 1982-83 GM FOUR CYLINDER CJ-5,6,7,8, SCRAMBLER	Fig. 8-1900
DISTRIBUTOR 2.5L AMC FOUR CYLINDER--CARBURETED 1983-86	Fig. 8-2000
DISTRIBUTOR 2.5L AMC FOUR CYLINDER-INJECTED 1986	Fig. 8-2100
DISTRIBUTOR 2.8L SIX CYLINDER XJ CHEROKEE, XJ WAGONEER, COMANCHE	Fig. 8-2200
DISTRIBUTOR 4.2L SIX CYLINDER	Fig. 8-2300
DISTRIBUTOR 5.9L EIGHT CYLINDER	Fig. 8-2400
STARTERS	
STARTER AND MOUNTING GM FOUR CYLINDER CJ-5,6,7,8, SCRAMBLER	Fig. 8-2500
STARTER AND MOUNTING 2.5L AMC FOUR CYLINDER-CARBURETED	Fig. 8-2600
STARTER AND MOUNTING 2.5L AMC FOUR CYLINDER-INJECTED	Fig. 8-2700

ILLUSTRATION TITLE — GROUP-FIG. NO.

STARTERS (Continued)

STARTER AND MOUNTING 2.5L AMC FOUR CYLINDER-INJECTED . . . Fig. 8-2700
STARTER AND MOUNTING 2.8L SIX CYLINDER XJ CHEROKEE, XJ WAGONEER, COMANCHE . . . Fig. 8-2800
STARTER AND MOUNTING 4.2L - SIX CYLINDER 5.9L - EIGHT CYLINDER . . . Fig. 8-2900
STARTER AND MOUNTING 1981-85 ISUZU DIESEL CJ-5,6,7,8 OR SCRAMBLER . . . Fig. 8-3000
STARTER AND MOUNTING 1986 RENAULT DIESEL CJ-5,6,7,8 OR SCRAMBLER . . . Fig. 8-3100
STARTER AND MOUNTING 1984-86 RENAULT DIESEL XJ CHEROKEE, XJ WAGONEER, COMMACHE . . . Fig. 8-3200

ALTERNATORS

ALTERNATOR 42-56-63-78 AMP. CJ-5,6,7,8, SCRAMBLER . . . Fig. 8-3300
ALTERNATOR AND MOUNTING 85-94 AMP. CJ-5,6,7,8, SCRAMBLER . . . Fig. 8-3400
ALTERNATOR 70 AMP. CJ-5,6,7,8, SCRAMBLER . . . Fig. 8-3500
ALTERNATOR 81-85 ISUZU DIESEL CJ-5,6,7,8, SCRAMBLER . . . Fig. 8-3600
ALTERNATOR 1986 RENAULT DIESEL CJ-5,6,7,8, SCRAMBLER . . . Fig. 8-3700
ALTERNATOR MOUNTING 2.5L GM FOUR CYLINDER WITHOUT AMERICAN AIR . . . Fig. 8-3800
ALTERNATOR MOUNTING 2.5L GM FOUR CYLINDER WITH AMERICAN AIR . . . Fig. 8-3900
ALTERNATOR MOUNTING 2.5L AMC FOUR CYLINDER CJ-5,6,7,8, SCRAMBLER . . . Fig. 8-4000
ALTERNATOR MOUNTING 4.2L SIX CYLINDER CJ-5,6,7,8, SCRAMBLER . . . Fig. 8-4100
ALTERNATOR MOUNTING 5.9L EIGHT CYLINDER CJ-5,6,7,8, SCRAMBLER . . . Fig. 8-4200
ALTERNATOR MOUNTING 1981-85 ISUZU DIESEL CJ-5,6,7,8, SCRAMBLER . . . Fig. 8-4300
ALTERNATOR MOUNTING 1986 ISUZU DIESEL CJ-5,6,7,8, SCRAMBLER . . . Fig. 8-4400
ALTERNATOR 2.5L FOUR AND 2.8L SIX CYLINDER XJ CHEROKEE, XJ WAGONEER, COMANCHE . . . Fig. 8-4500
ALTERNATOR--60 AMP 2.1L DIESEL XJ CHEROKEE, XJ WAGONEER, COMANCHE . . . Fig. 8-4600
ALTERNATOR--70 AMP 2.1L DIESEL XJ CHEROKEE, XJ WAGONEER, COMANCHE . . . Fig. 8-4700
ALTERNATOR MOUNTING FOUR CYLINDER WITHOUT AMERICAN AIR XJ CHEROKEE, XJ WAGONEER, COMANCHE . . . Fig. 8-4800
ALTERNATOR MOUNTING FOUR CYLINDER---AMERICAN AIR XJ CHEROKEE, XJ WAGONEER, COMANCHE . . . Fig. 8-4900
ALTERNATOR MOUNTING SIX CYLINDER XJ CHEROKEE, XJ WAGONEER, COMANCHE . . . Fig. 8-5000
ALTERNATOR MOUNTING 2.1L DIESEL XJ CHEROKEE, XJ WAGONEER, COMANCHE . . . Fig. 8-5100
ALTERNATOR 42-56-63-78 AMP. SJ CHEROKEE, SJ WAGONEER, J10, J20 . . . Fig. 8-5200
ALTERNATOR 85-94 AMP. SJ CHEROKEE, SJ WAGONEER, J10, J20 . . . Fig. 8-5300
ALTERNATOR 70 AMP. SJ CHEROKEE, SJ WAGONEER, J10, J20 . . . Fig. 8-5400
ALTERNATOR 4.2L SIX CYLINDER SJ CHEROKEE, SJ WAGONEER, J10, J20 . . . Fig. 8-5500
ALTERNATOR MOUNTING 5.9L EIGHT CYLINDER SJ CHEROKEE, SJ WAGONEER, J10, J20 . . . Fig. 8-5600

IGNITION SYSTEMS

COIL--SPARKPLUGS--WIRES 2.5L GM FOUR CYLINDER . . . Fig. 8-5700
COIL--SPARKPLUGS--WIRES 2.5L AMC FOUR CYLINDER . . . Fig. 8-5800

GROUP 8 - ELECTRICAL

ILLUSTRATION TITLE — GROUP-FIG. NO.

IGNITION SYSTEMS (Continued)

COIL--SPARKPLUGS--WIRES 2.5L AMC FOUR CYLINDER . . . Fig. 8-5800
COIL--SPARKPLUGS--WIRES 2.8L SIX CYLINDER . . . Fig. 8-5900
COIL--SPARKPLUGS--WIRES 4.2L SIX CYLINDER . . . Fig. 8-6000
COIL--SPARKPLUGS--WIRES 5.9L EIGHT CYLINDER . . . Fig. 8-6100
GLOWPLUG CONTROL DIESEL CJ-5,6,7,8, SCRAMBLER . . . Fig. 8-6200

HORNS

HORNS ALL . . . Fig. 8-6300

LAMPS

LAMPS--FRONT U.S. AND CANADA CJ-5,6,7,8, SCRAMBLER . . . Fig. 8-6400
LAMPS--FRONT EXPORT EXCEPT JAPAN CJ-5,6,7,8, SCRAMBLER . . . Fig. 8-6500
LAMPS--FRONT JAPAN CJ-5,6,7,8, SCRAMBLER . . . Fig. 8-6600
LAMPS--FRONT FOG CJ-5,6,7,8, SCRAMBLER . . . Fig. 8-6700
LAMP--FRONT BLACKOUT CJ-5,6,7,8, SCRAMBLER . . . Fig. 8-6800
LAMP--FRONT U.S. AND CANADA XJ CHEROKEE, XJ WAGONEER, COMANCHE . . . Fig. 8-6900
LAMPS--FRONT U.S. AND CANADA XJ WAGONEER . . . Fig. 8-7000
LAMPS--FRONT EXPORT XJ CHEROKEE, COMANCHE . . . Fig. 8-7100
LAMPS--FRONT FOG XJ CHEROKEE, XJ WAGONEER, COMANCHE . . . Fig. 8-7200
LAMPS--FRONT U.S. AND CANADA SJ CHEROKEE, SJ WAGONEER, J10, J20 . . . Fig. 8-7300
LAMPS--FRONT EXPORT SJ CHEROKEE, SJ WAGONEER, J10, J20 . . . Fig. 8-7400
LAMPS--FRONT FOG SJ CHEROKEE, SJ WAGONEER, J10, J20 . . . Fig. 8-7500
LAMPS--REAR U.S. AND CANADA CJ-5,6,7,8, SCRAMBLER . . . Fig. 8-7600
LAMPS--REAR U.S. AND CANADA CJ-5,6,7,8, SCRAMBLER . . . Fig. 8-7700
LAMP--REAR FOG EXPORT CJ-5,6,7,8, SCRAMBLER . . . Fig. 8-7800
LAMP--REAR BLACKOUT EXPORT CJ-5,6,7,8 SCRAMBLER . . . Fig. 8-7900
LAMPS--REAR CHEROKEE, WAGONEER, COMANCHE . . . Fig. 8-8000
LAMPS--REAR CHEROKEE 1981 . . . Fig. 8-8100
LAMPS--REAR SJ WAGONEER 1981-1983 1/2 . . . Fig. 8-8200
LAMPS--REAR SJ WAGONEER, SJ CHEROKEE 1982-83 . . . Fig. 8-8300
LAMP--REAR TOWNSIDE-J10, J20 . . . Fig. 8-8400
LAMP--REAR SPORTSIDE-J10, J20 . . . Fig. 8-8500
LAMP--LICENSE SJ CHEROKEE, SJ WAGONEER . . . Fig. 8-8600
LAMP--INTERIOR AND UNDERHOOD CJ-5,6,7,8 SCRAMBLER . . . Fig. 8-8700
LAMP--INTERIOR EXPORT WORLD CAB . . . Fig. 8-8800
LAMP--INTERIOR AND UNDERHOOD XJ CHEROKEE, XJ WAGONEER, COMANCHE . . . Fig. 8-8900
LAMP--INTERIOR AND UNDERHOOD SJ CHEROKEE, SJ WAGONEER, J10, J20 . . . Fig. 8-9000

GROUP 8 - ELECTRICAL

ILLUSTRATION TITLE	GROUP-FIG. NO.
WIRING HARNESS	
POWER SUPPLY 24 VOLT, EXPORT CJ-5,6,7,8 SCRAMBLER	Fig. 8-9100
WIRING--ENGINE AND BODY CJ-5,6,7,8 SCRAMBLER	Fig. 8-9200
WIRING--COMPARTMENT XJ CHEROKEE, XJ WAGONEER 1984	Fig. 8-9300
WIRING--ENGINE COMPARTMENT XJ CHEROKEE, XJ WAGONEER 1985	Fig. 8-9400
WIRING--ENGINE COMPARTMENT XJ CHEROKEE, XJ WAGONEER, COMANCHE 1986	Fig. 8-9500
WIRING--INSTRUMENT PANEL XJ CHEROKEE, XJ WAGONEER, COMANCHE	Fig. 8-9600
WIRING--BODY XJ CHEROKEE, XJ WAGONEER 1984-85	Fig. 8-9700
WIRING--BODY XJ CHEROKEE, XJ WAGONEER 1986	Fig. 8-9800
WIRING--BODY COMANCHE 1986	Fig. 8-9900
WIRING--ENGINE COMPARTMENT SJ CHEROKEE, SJ WAGONEER, J10, J20	Fig. 8-10000
WIRING--INSTRUMENT PANEL SJ CHEROKEE, SJ WAGONEER, J10, J20	Fig. 8-10100
WIRING--BODY SJ CHEROKEE, SJ WAGONEER	Fig. 8-10200
WIRING--BODY J10, J20	Fig. 8-10300
SYSTEM SENTRY	
SYSTEM SENTRY XJ CHEROKEE, XJ WAGONEER 1985	Fig. 8-10400

RELAYS CJ-5,6,7,8, SCRAMBLER
Figure 8-100

81J08 100

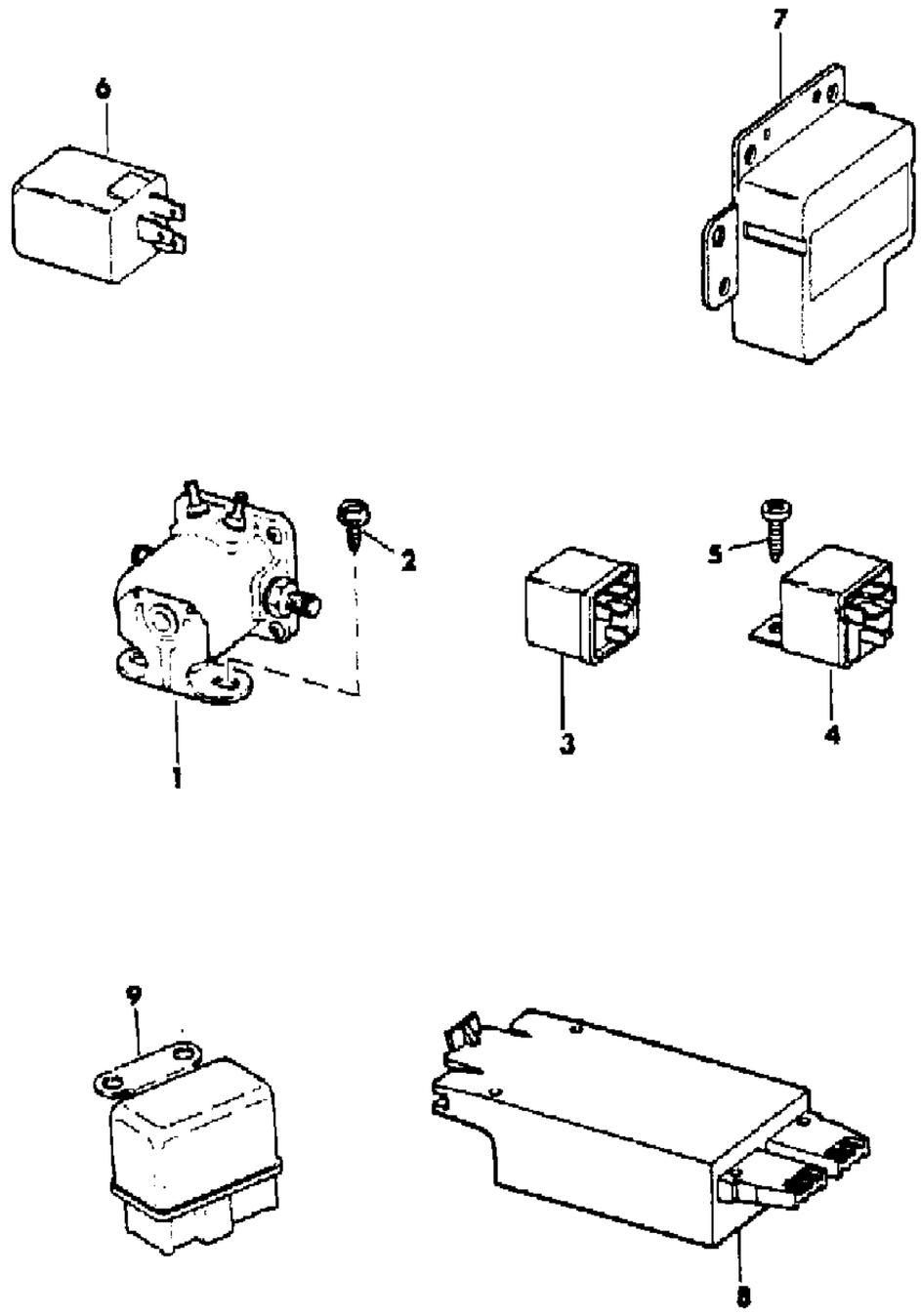

ITEM	PART NUMBER	QTY	BODY	MODEL	DESCRIPTION
1					RELAY, Starter
	J575 8600	1			GM Four Cylinder
	J323 5898	1			AMC Four Cylinder
					Six Cylinder
					w/Man. Trans.
	J323 0406	1			1981-83
	J323 5898	1			1984-86
	J575 2125	1			w/Auto. Trans.
					Eight Cylinder
	J323 0406	1			Man. Trans.
	J575 2125	1			Auto. Trans.
	J806 0445	1			Diesel
2	J812 0054	2			SCREW
3					RELAY, Manifold Heater
	3300 1779	1			Four Cylinder
	J323 9095	1			Six Cylinder
4					RELAY, Fog Lamps
	J322 5922	1			1981
	3300 1776	1			1982-83
	5600 2958	1			1984-86
5	1150 2843	1			SCREW
6	J576 4039	1			RELAY, Horn
7	J323 5649	1			TIMER, Emissions
8	J372 8007	1			GOVERNOR, Intermittent Wipers
9					RELAY, Glow Plug Control
	J575 2304	1			1981-85: Isuzu Diesel
	J575 2417	1			1986: Renault Diesel

MODEL CODES

16=Cherokee 2 Dr.(1981-83)
17=Cherokee 2 Dr.(1981-83)
73=Cherokee 2WD-2 Dr.(1984-86)
74=Cherokee 2WD-4 Dr.(1984-86)
18=Cherokee 4 Dr.(1981-83)
77=Cherokee 4WD-2 Dr.(1984-86)
78=Cherokee 4WD-4 Dr.(1984-86)
85=CJ-5 (1981-83)
86=CJ-6(1981)
87=CJ-7(1981-86)
88=CJ-8, Scrambler(1981-86)
64=Comanche 2WD-6 Ft. Box(1986)
66=Comanche 2WD-7 Ft. Box(1986)
63=Comanche 4WD-6 Ft. Box(1986)
65=Comanche 4WD-7 Ft. Box(1986)
15=Grand Wagoneer 4 Dr.(1984-86)
25=J-10 Truck 7 Ft. Box(1981-84)
26=J10 Truck 8 Ft. Box(1981-86)
27=J-20 Truck 8 Ft. Box(1981-86)
15=Wagoneer 4 Dr.(1981-83)
75=Wagoneer 4WD-4 Dr.(1984-86)

BODY
CJ=CJ-5, CJ-6, CJ-7, CJ-8, Scrambler(1981-86)
MJ=Comanche Pickup(1986)

STYLES
SJ=Wagoneer(1981-83), Grand Wagoneer(1984-86), Cherokee(1981-83), J-10, J-20(1981-86)
XJ=Wagoneer(1984-86), Cherokee(1984-86)

AR = Use as Required - = Non Illustrated Part P.A.R. = Paint as Required

« RETURN TO GROUP INDEX

RELAYS XJ CHEROKEE, XJ WAGONEER, COMANCHE
Figure 8-200

81J08 200

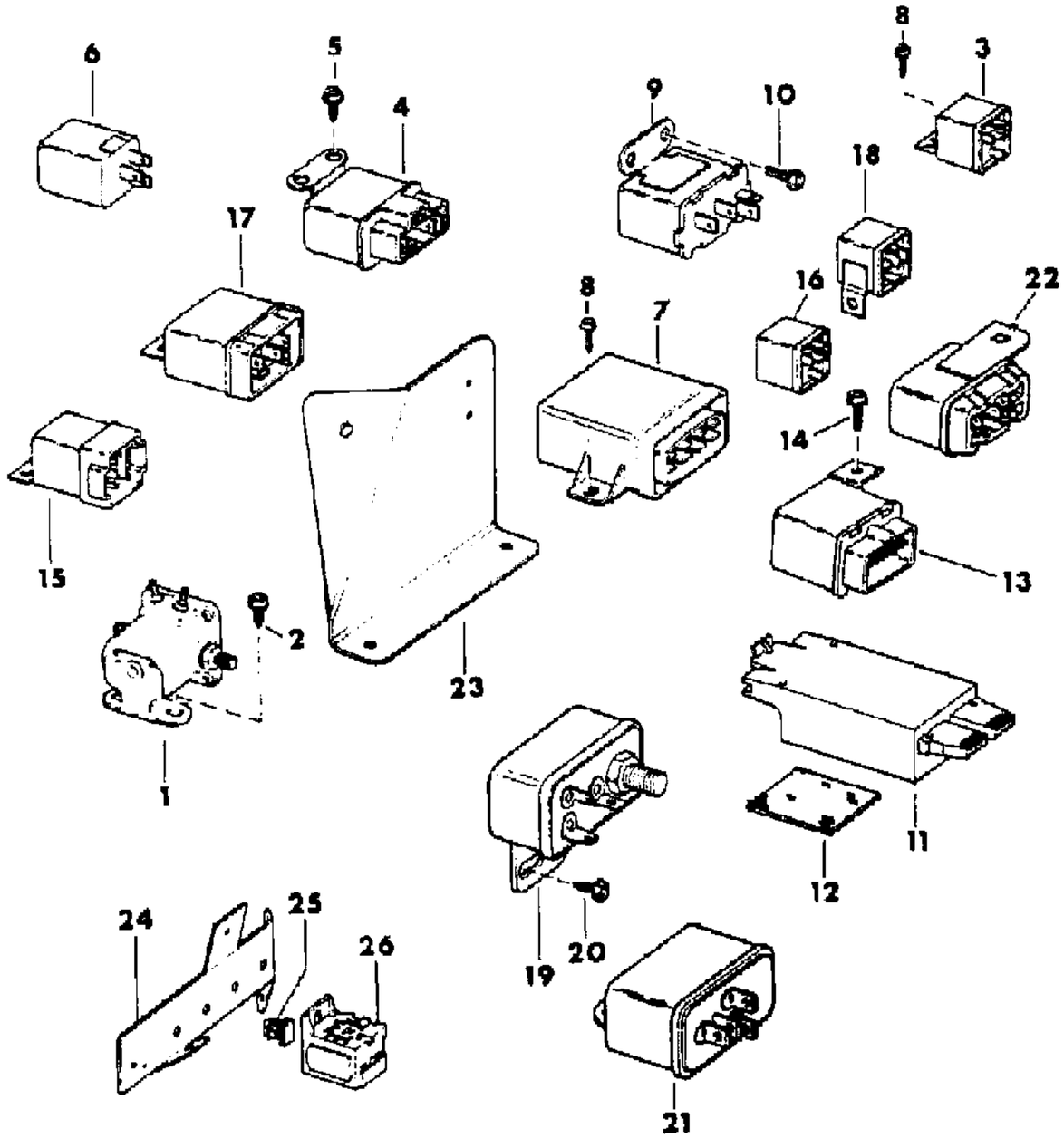

ITEM	PART NUMBER	QTY	BODY	MODEL	DESCRIPTION
1					RELAY, Starter
					Four Cylinder
	J323 5898	1			Man. Trans.
	J323 5897	1			Auto. Trans.
2	1150 0079	2			SCREW
3					RELAY
	3600 0400	1			Manifold Heater
					Fog Lamps
	3600 0400	1			1984
	3300 1779	1			1985
	3300 1778	1			1986
	3600 0400	1			Keyless Entry
	3600 0400	2			Door Locks
	3300 1778	1			Idle Speed Control
4	5600 1186	1			RELAY, Choke Heater
5	1150 0985	2			SCREW
6	5600 1111	1			RELAY, Horn
7	3300 1301	1			TIMER, Diesel Glow Plug Relay
8	1150 2843	AR			SCREW
9	3600 0350	1			RELAY, Heated Glass
10	3420 1489	1			SCREW
11	5600 0428	1			GOVERNOR, Intermittent Wiper
12	J368 9091	1			FASTENER, Velcro Hook
13	5600 0636	1			RELAY, Headlamp Delay
14	3420 1418	1			SCREW
15	5600 0836	1			RELAY, Power Antenna
16					RELAY
	3300 1779	1			Anti-Diesel
	3300 1779	1			Throttle Control
					Glow Plug Control
	3300 1779	1			1984-85
	3600 3046	1			1986
	3300 1779	1			Air Conditioning
17	3300 1942	1			RELAY, Anti-Diesel Time Delay
18	J323 9095	1			RELAY, Rear Door Wiper
19					RELAY, Starter
					Four Cylinder
	5300 4798	1			1986
					Six Cylinder

MODEL CODES

16=Cherokee 2 Dr.(1981-83)
17=Cherokee 2 Dr.(1981-83)
73=Cherokee 2WD-2 Dr.(1984-86)
74=Cherokee 2WD-4 Dr.(1984-86)
18=Cherokee 4 Dr.(1981-83)
77=Cherokee 4WD-2 Dr.(1984-86)
78=Cherokee 4WD-4 Dr.(1984-86)
85=CJ-5 (1981-83)
86=CJ-6(1981)
87=CJ-7(1981-86)
88=CJ-8, Scrambler(1981-86)
64=Comanche 2WD-6 Ft. Box(1986)
66=Comanche 2WD-7 Ft. Box(1986)
63=Comanche 4WD-6 Ft. Box(1986)
65=Comanche 4WD-7 Ft. Box(1986)
15=Grand Wagoneer 4 Dr.(1984-86)
25=J-10 Truck 7 Ft. Box(1981-84)
26=J10 Truck 8 Ft. Box(1981-86)
27=J-20 Truck 8 Ft. Box(1981-86)
15=Wagoneer 4 Dr.(1981-83)
75=Wagoneer 4WD-4 Dr.(1984-86)

BODY
CJ=CJ-5, CJ-6, CJ-7, CJ-8, Scrambler(1981-86)
MJ=Comanche Pickup(1986)

STYLES
SJ=Wagoneer(1981-83), Grand Wagoneer(1984-86), Cherokee(1981-83), J-10, J-20(1981-86)
XJ=Wagoneer(1984-86), Cherokee(1984-86)

AR = Use as Required - = Non Illustrated Part P.A.R. = Paint as Required

81J08 200

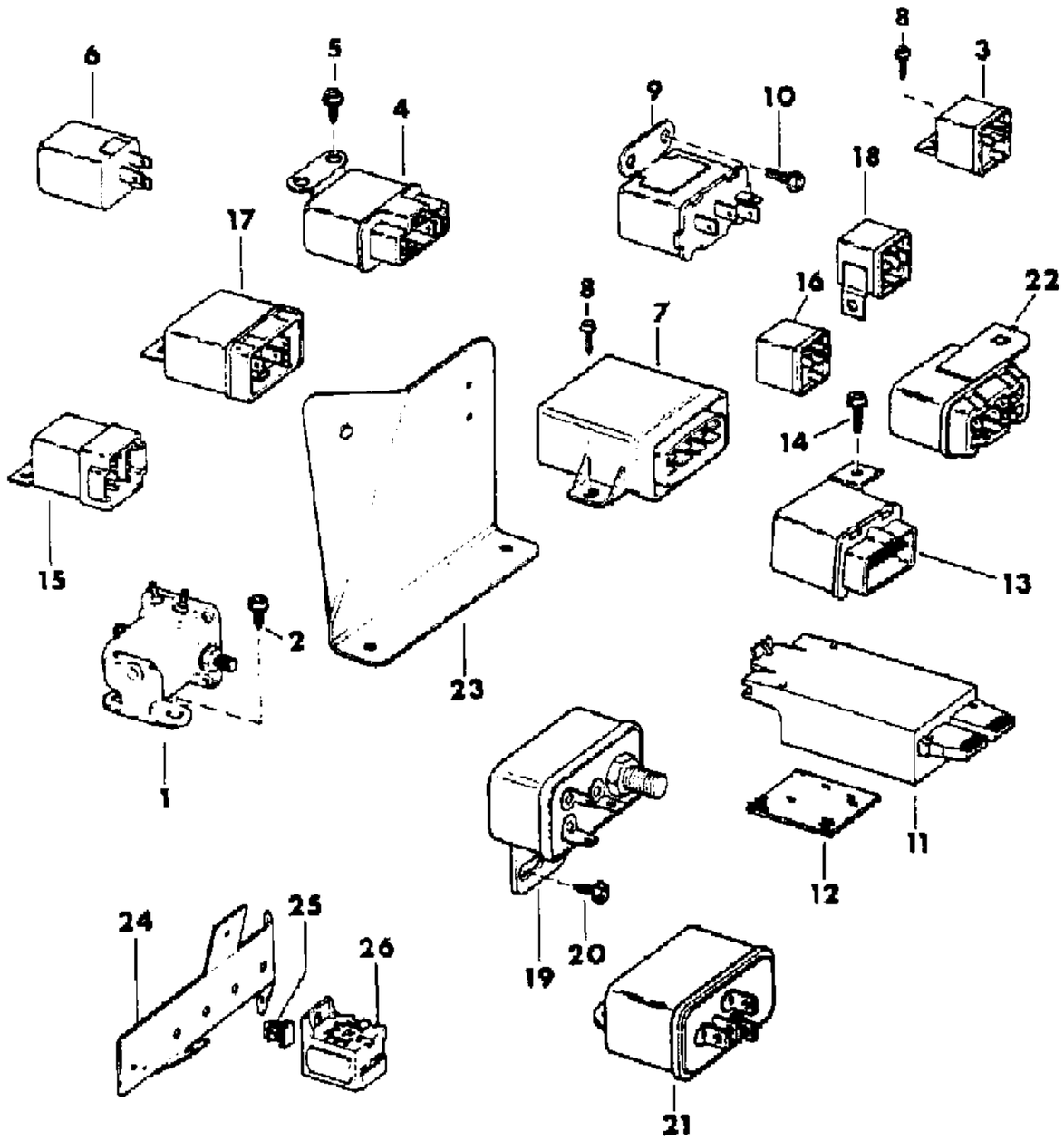

ITEM	PART NUMBER	QTY	BODY	MODEL	DESCRIPTION
	J323 6793	1			1984-85
	3300 3934	1			1986
	J323 6793	1			Diesel
20	J400 4772	2			SCREW
21	3300 2326	1			RELAY, A/C Clutch
22					RELAY, Power Steering
	5300 3069	1			1986: Four Cylinder
23					BRACKET, Starter Relay
	5300 4672	1			1986: Diesel
24	5300 2653	1			BRACKET, Relay
25	J417 9831	4			CLIP
26	J417 9106	4			CONNECTOR

MODEL CODES
16=Cherokee 2 Dr.(1981-83)
17=Cherokee 2 Dr.(1981-83)
73=Cherokee 2WD-2 Dr.(1984-86)
74=Cherokee 2WD-4 Dr.(1984-86)
18=Cherokee 4 Dr.(1981-83)
77=Cherokee 4WD-2 Dr.(1984-86)
78=Cherokee 4WD-4 Dr.(1984-86)
85=CJ-5 (1981-83)
86=CJ-6(1981)
87=CJ-7(1981-86)
88=CJ-8, Scrambler(1981-86)
64=Comanche 2WD-6 Ft. Box(1986)
66=Comanche 2WD-7 Ft. Box(1986)
63=Comanche 4WD-6 Ft. Box(1986)
65=Comanche 4WD-7 Ft. Box(1986)
15=Grand Wagoneer 4 Dr.(1984-86)
25=J-10 Truck 7 Ft. Box(1981-84)
26=J10 Truck 8 Ft. Box(1981-86)
27=J-20 Truck 8 Ft. Box(1981-86)
15=Wagoneer 4 Dr.(1981-83)
75=Wagoneer 4WD-4 Dr.(1984-86)

BODY
CJ=CJ-5, CJ-6, CJ-7, CJ-8, Scrambler(1981-86)
MJ=Comanche Pickup(1986)

STYLES
SJ=Wagoneer(1981-83), Grand Wagoneer(1984-86), Cherokee(1981-83), J-10, J-20(1981-86)
XJ=Wagoneer(1984-86), Cherokee(1984-86)

AR = Use as Required - = Non Illustrated Part P.A.R. = Paint as Required

RELAYS SJ CHEROKEE, SJ WAGONEER, J10, J20
Figure 8-300

81J08 300

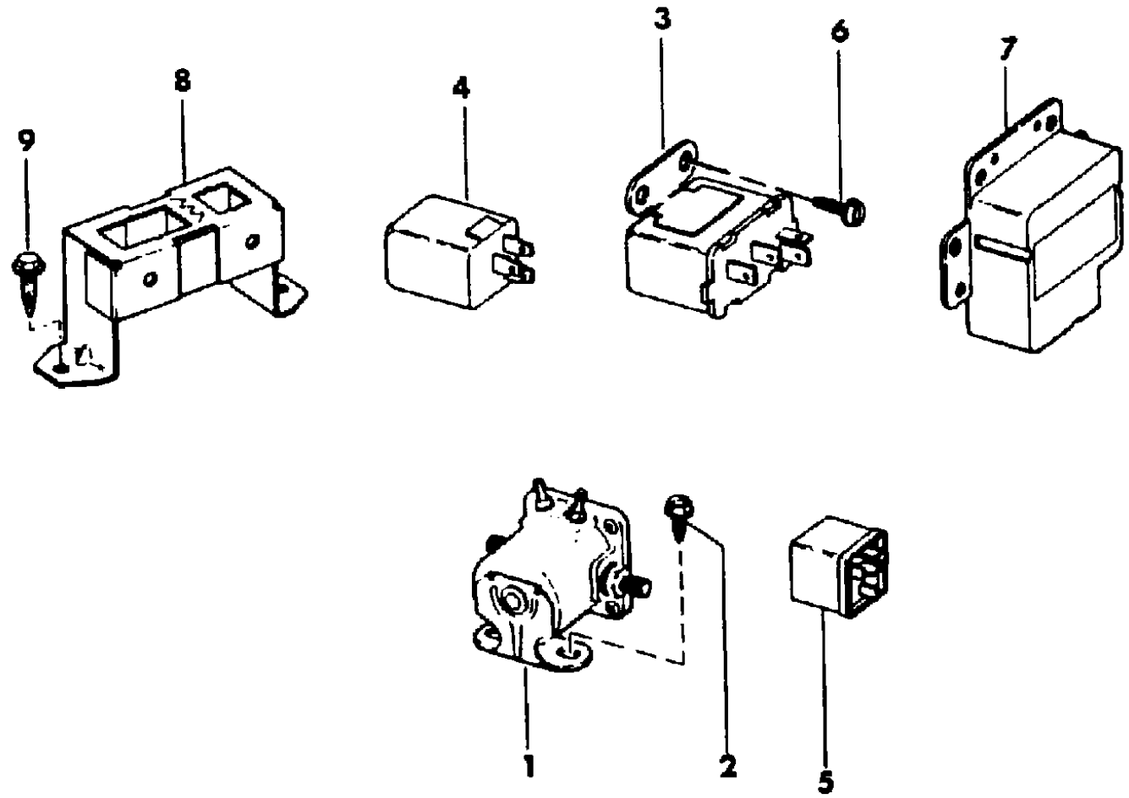

ITEM	PART NUMBER	QTY	BODY	MODEL	DESCRIPTION
1					RELAY, Starter
	J323 0406	1			Man. Trans.
	J575 2125	1			Auto. Trans.
2	J400 4801	2			SCREW
3					RELAY
	J546 1897	1			Heated Glass
	J812 5976	1			Cruise Control
4					RELAY, Horn
	J545 6647	1			1981
	J576 4039	1			1982-86
5					RELAY
	J323 9095	1			Manifold Heater
	3300 1779	1			Idle Speed Control
					Fog Lamps
	J322 5922	1			1981
	J323 9095	1			1982-83
	3300 1779	1			1984-86
6	3420 1489	1			SCREW
7					RELAY
	5600 2460	1			Emission Maintenance
	J322 7813	1			Seat Belt Warning
8	J576 1769	1			BRACKET, Diagnostic Connector
9	J400 1701	2			SCREW

MODEL CODES

16=Cherokee 2 Dr.(1981-83)
17=Cherokee 2 Dr.(1981-83)
73=Cherokee 2WD-2 Dr.(1984-86)
74=Cherokee 2WD-4 Dr.(1984-86)
18=Cherokee 4 Dr.(1981-83)
77=Cherokee 4WD-2 Dr.(1984-86)
78=Cherokee 4WD-4 Dr.(1984-86)
85=CJ-5 (1981-83)
86=CJ-6(1981)
87=CJ-7(1981-86)
88=CJ-8, Scrambler(1981-86)
64=Comanche 2WD-6 Ft. Box(1986)
66=Comanche 2WD-7 Ft. Box(1986)
63=Comanche 4WD-6 Ft. Box(1986)
65=Comanche 4WD-7 Ft. Box(1986)
15=Grand Wagoneer 4 Dr.(1984-86)
25=J-10 Truck 7 Ft. Box(1981-84)
26=J10 Truck 8 Ft. Box(1981-86)
27=J-20 Truck 8 Ft. Box(1981-86)
15=Wagoneer 4 Dr.(1981-83)
75=Wagoneer 4WD-4 Dr.(1984-86)

BODY
CJ=CJ-5, CJ-6, CJ-7, CJ-8, Scrambler(1981-86)
MJ=Comanche Pickup(1986)

STYLES
SJ=Wagoneer(1981-83), Grand Wagoneer(1984-86), Cherokee(1981-83), J-10, J-20(1981-86)
XJ=Wagoneer(1984-86), Cherokee(1984-86)

AR = Use as Required - = Non Illustrated Part P.A.R. = Paint as Required

« RETURN TO GROUP INDEX

SWITCHES AND SENDING UNITS CJ-5,6,7,8, SCRAMBLER
Figure 8-400

81J08 400

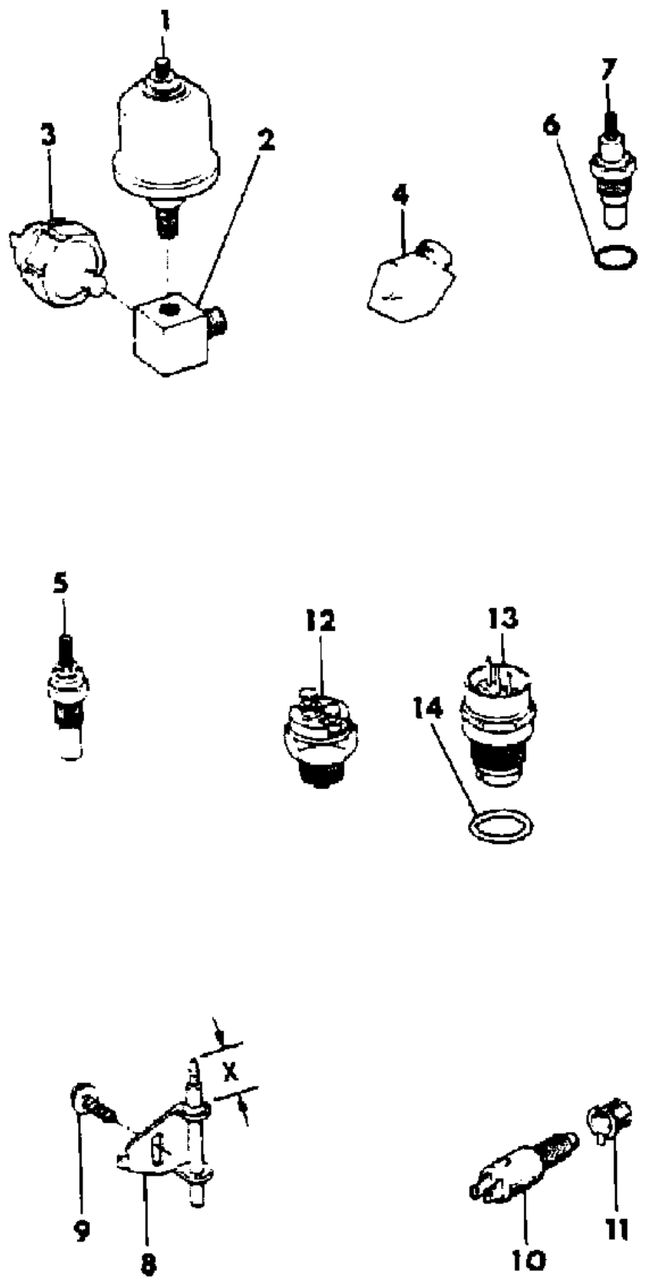

ITEM	PART NUMBER	QTY	BODY	MODEL	DESCRIPTION
1					SENDING UNIT, Oil Pressure
	J324 1716	1			GM Four Cylinder
	J321 2004	1			AMC Four Cylinder
	J321 2004	1			Six Cylinder
	J321 2004	1			Eight Cylinder
	J575 1951	1			Diesel
2					FITTING
	J400 6974	1			Four Cylinder
	J400 6600	1			Six Cylinder
	J400 5881	1			Eight Cylinder
					Diesel
	J400 6675	1			1981-85: Isuzu
	J420 0327	1			1986: Renault
3					SWITCH, Oil Pressure
					1981
	J575 8695	1			Two Terminals
	J323 1347	1			Three Terminals
	J575 8695	1			1982-86
4	J400 5879	1			ELBOW
5					SENDING UNIT, Coolant Temp.
	J575 1811	1			GM Four Cylinder
	J317 7594	1			AMC Four Cylinder
	J317 7594	1			Six Cylinder
	J317 7594	1			Eight Cylinder
					Diesel
	J575 2305	1			1981-85: Isuzu
	T076 7102	1			1986: Renault
6					GASKET
	J306 2001	1			1986: Renault Diesel
7					SENSOR, Temperature
					Diesel
	J547 0000	1			1981-85: Isuzu
	J576 2523	1			1986: Renault
8					SWITCH, Parking Brake Warning Lamp
	J323 2194	1			.50" Long Probe
	J546 0111	1			1.00" Long Probe
9	J942 1073	1			SCREW
10	J535 2620	1			SWITCH, Brake Lamp
11	J535 2622	1			RETAINER

MODEL CODES

16=Cherokee 2 Dr.(1981-83)	78=Cherokee 4WD-4 Dr.(1984-86)	64=Comanche 2WD-6 Ft. Box(1986)	25=J-10 Truck 7 Ft. Box(1981-84)
17=Cherokee 2 Dr.(1981-83)	85=CJ-5 (1981-83)	66=Comanche 2WD-7 Ft. Box(1986)	26=J10 Truck 8 Ft. Box(1981-86)
73=Cherokee 2WD-2 Dr.(1984-86)	86=CJ-6(1981)	63=Comanche 4WD-6 Ft. Box(1986)	27=J-20 Truck 8 Ft. Box(1981-86)
74=Cherokee 2WD-4 Dr.(1984-86)	87=CJ-7(1981-86)	65=Comanche 4WD-7 Ft. Box(1986)	15=Wagoneer 4 Dr.(1981-83)
18=Cherokee 4 Dr.(1981-83)	88=CJ-8, Scrambler(1981-86)	15=Grand Wagoneer 4 Dr.(1984-86)	75=Wagoneer 4WD-4 Dr.(1984-86)
77=Cherokee 4WD-2 Dr.(1984-86)			

BODY
CJ=CJ-5, CJ-6, CJ-7, CJ-8, Scrambler(1981-86)
MJ=Comanche Pickup(1986)

STYLES
SJ=Wagoneer(1981-83), Grand Wagoneer(1984-86), Cherokee(1981-83), J-10, J-20(1981-86)
XJ=Wagoneer(1984-86), Cherokee(1984-86)

AR = Use as Required - = Non Illustrated Part P.A.R. = Paint as Required

81J08 400

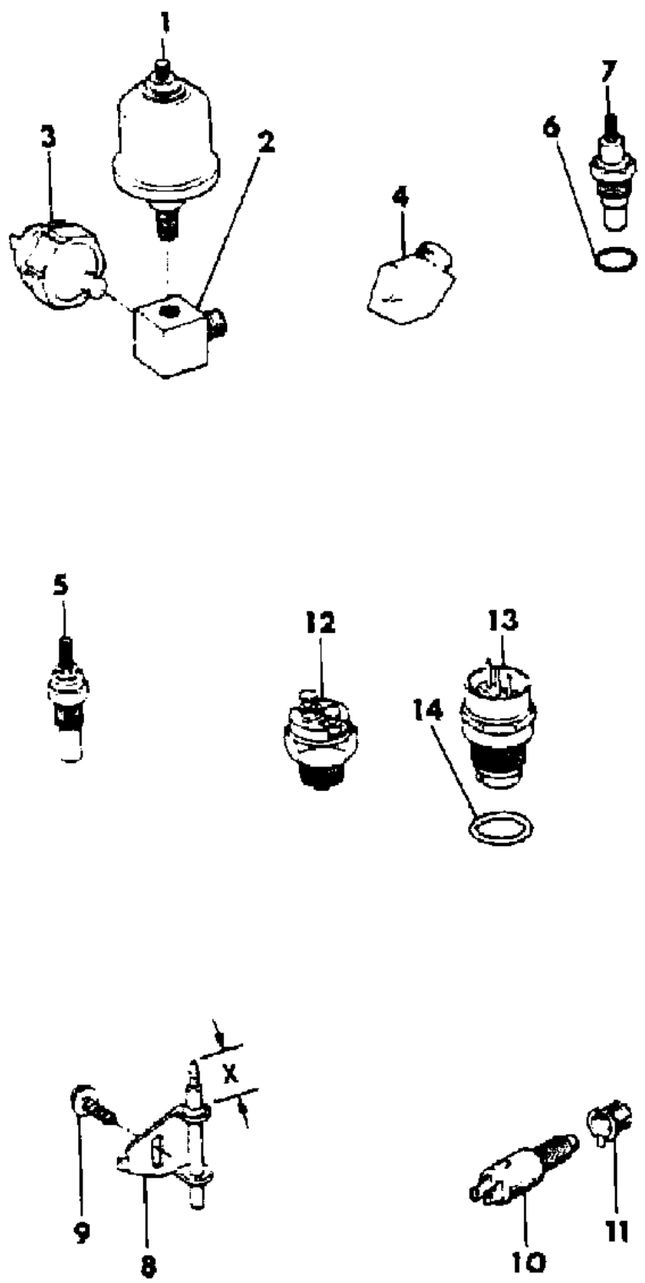

ITEM	PART NUMBER	QTY	BODY	MODEL	DESCRIPTION
12	J813 4068	1			SWITCH, Back Up Lamp
13	J323 2844	1			SWITCH, Neutral Safety
14	J812 1142	1			GASKET

MODEL CODES

16=Cherokee 2 Dr.(1981-83)	78=Cherokee 4WD-4 Dr.(1984-86)	64=Comanche 2WD-6 Ft. Box(1986)	25=J-10 Truck 7 Ft. Box(1981-84)
17=Cherokee 2 Dr.(1981-83)	85=CJ-5 (1981-83)	66=Comanche 2WD-7 Ft. Box(1986)	26=J10 Truck 8 Ft. Box(1981-86)
73=Cherokee 2WD-2 Dr.(1984-86)	86=CJ-6(1981)	63=Comanche 4WD-6 Ft. Box(1986)	27=J-20 Truck 8 Ft. Box(1981-86)
74=Cherokee 2WD-4 Dr.(1984-86)	87=CJ-7(1981-86)	65=Comanche 4WD-7 Ft. Box(1986)	15=Wagoneer 4 Dr.(1981-83)
18=Cherokee 4 Dr.(1981-83)	88=CJ-8, Scrambler(1981-86)	15=Grand Wagoneer 4 Dr.(1984-86)	75=Wagoneer 4WD-4 Dr.(1984-86)
77=Cherokee 4WD-2 Dr.(1984-86)			

BODY
CJ=CJ-5, CJ-6, CJ-7, CJ-8, Scrambler(1981-86)
MJ=Comanche Pickup(1986)

STYLES
SJ=Wagoneer(1981-83), Grand Wagoneer(1984-86), Cherokee(1981-83), J-10, J-20(1981-86)
XJ=Wagoneer(1984-86), Cherokee(1984-86)

AR = Use as Required - = Non Illustrated Part P.A.R. = Paint as Required

Figure 8-500

81J08 500

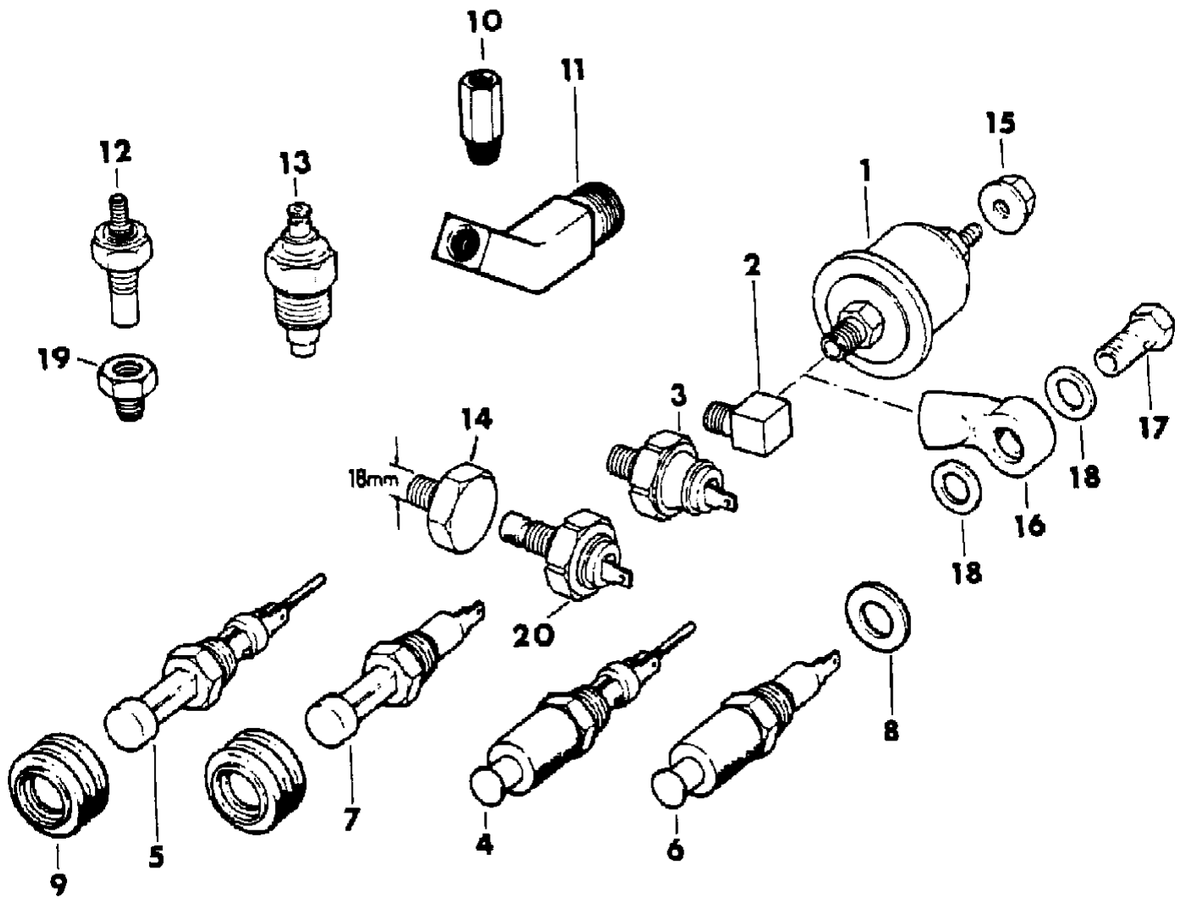

ITEM	PART NUMBER	QTY	BODY	MODEL	DESCRIPTION
1					SENDING UNIT, Oil Pressure
					Gauge Package
					Four or Six Cylinder
	5300 0834	1			1984-85
	5300 4550	1			1986
	3300 2472	1			Diesel
2	J400 6974	1			FITTING
3					SWITCH, Oil Pressure
	J314 2826	1			w/o Gauge Package
4	5600 0137	AR			SWITCH, Dome Lamp
5					SWITCH, Dome Lamp
	5600 0137	AR			Use With J4006601 Washer
6	5600 0136	AR			SWITCH, Dome Lamp
7					SWITCH, Dome Lamp
	5600 0136	AR			Use With J4006601 Washer
8	3420 1846	AR			WASHER
9	5600 1223	AR			BOOT
10					ADAPTER
	5300 0835	1			Six Cylinder
11					FITTING
	J940 9927	1			Six Cylinder
12					SENDING UNIT, Coolant Temperature
					Four Cylinder
					Gauge Package
	J324 2662	1			1984-85
	5300 4981	1			1986
	J323 0408	1			w/o Gauge Package
13					SENDING UNIT, Coolant Temperature
					Six Cylinder
	3300 1543	1			Gauge Package
	3300 1542	1			w/o Gauge Package
14					PLUG
	5300 3926	1			Diesel
15					NUT
	J027 1169	1			Diesel
16					ADAPTER
	3300 2464	1			Diesel
17					BOLT
	J066 7526	1			Diesel

MODEL CODES

16=Cherokee 2 Dr.(1981-83)
17=Cherokee 2 Dr.(1981-83)
73=Cherokee 2WD-2 Dr.(1984-86)
74=Cherokee 2WD-4 Dr.(1984-86)
18=Cherokee 4 Dr.(1981-83)
77=Cherokee 4WD-2 Dr.(1984-86)
78=Cherokee 4WD-4 Dr.(1984-86)
85=CJ-5 (1981-83)
86=CJ-6(1981)
87=CJ-7(1981-86)
88=CJ-8, Scrambler(1981-86)
64=Comanche 2WD-6 Ft. Box(1986)
66=Comanche 2WD-7 Ft. Box(1986)
63=Comanche 4WD-6 Ft. Box(1986)
65=Comanche 4WD-7 Ft. Box(1986)
15=Grand Wagoneer 4 Dr.(1984-86)
25=J-10 Truck 7 Ft. Box(1981-84)
26=J10 Truck 8 Ft. Box(1981-86)
27=J-20 Truck 8 Ft. Box(1981-86)
15=Wagoneer 4 Dr.(1981-83)
75=Wagoneer 4WD-4 Dr.(1984-86)

BODY
CJ=CJ-5, CJ-6, CJ-7, CJ-8, Scrambler(1981-86)
MJ=Comanche Pickup(1986)

STYLES
SJ=Wagoneer(1981-83), Grand Wagoneer(1984-86), Cherokee(1981-83), J-10, J-20(1981-86)
XJ=Wagoneer(1984-86), Cherokee(1984-86)

AR = Use as Required - = Non Illustrated Part P.A.R. = Paint as Required

Figure 8-500

81J08 500

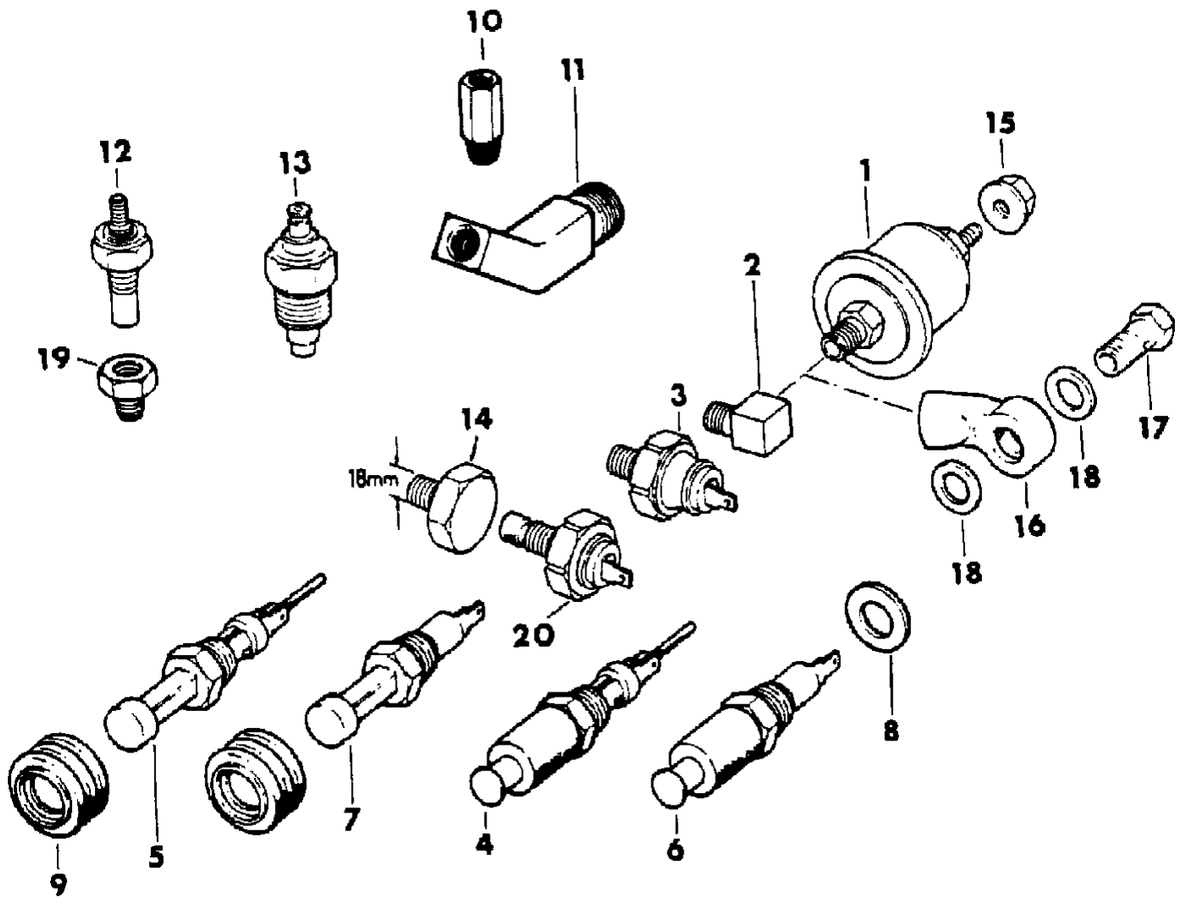

ITEM	PART NUMBER	QTY	BODY	MODEL	DESCRIPTION
18					GASKET
	T066 7527	2			Diesel
19					ADAPTER
	5300 1936	1			Diesel
20					SWITCH, Filter
	T071 5965	1			Diesel

MODEL CODES

16=Cherokee 2 Dr.(1981-83)
17=Cherokee 2 Dr.(1981-83)
73=Cherokee 2WD-2 Dr.(1984-86)
74=Cherokee 2WD-4 Dr.(1984-86)
18=Cherokee 4 Dr.(1981-83)
77=Cherokee 4WD-2 Dr.(1984-86)
78=Cherokee 4WD-4 Dr.(1984-86)
85=CJ-5 (1981-83)
86=CJ-6(1981)
87=CJ-7(1981-86)
88=CJ-8, Scrambler(1981-86)
64=Comanche 2WD-6 Ft. Box(1986)
66=Comanche 2WD-7 Ft. Box(1986)
63=Comanche 4WD-6 Ft. Box(1986)
65=Comanche 4WD-7 Ft. Box(1986)
15=Grand Wagoneer 4 Dr.(1984-86)
25=J-10 Truck 7 Ft. Box(1981-84)
26=J10 Truck 8 Ft. Box(1981-86)
27=J-20 Truck 8 Ft. Box(1981-86)
15=Wagoneer 4 Dr.(1981-83)
75=Wagoneer 4WD-4 Dr.(1984-86)

BODY
CJ=CJ-5, CJ-6, CJ-7, CJ-8, Scrambler(1981-86)
MJ=Comanche Pickup(1986)

STYLES
SJ=Wagoneer(1981-83), Grand Wagoneer(1984-86), Cherokee(1981-83), J-10, J-20(1981-86)
XJ=Wagoneer(1984-86), Cherokee(1984-86)

AR = Use as Required - = Non Illustrated Part P.A.R. = Paint as Required

SWITCHES AND SENDING UNITS SJ CHEROKEE, SJ WAGONEER, J10, J20
Figure 8-600

81J08 600

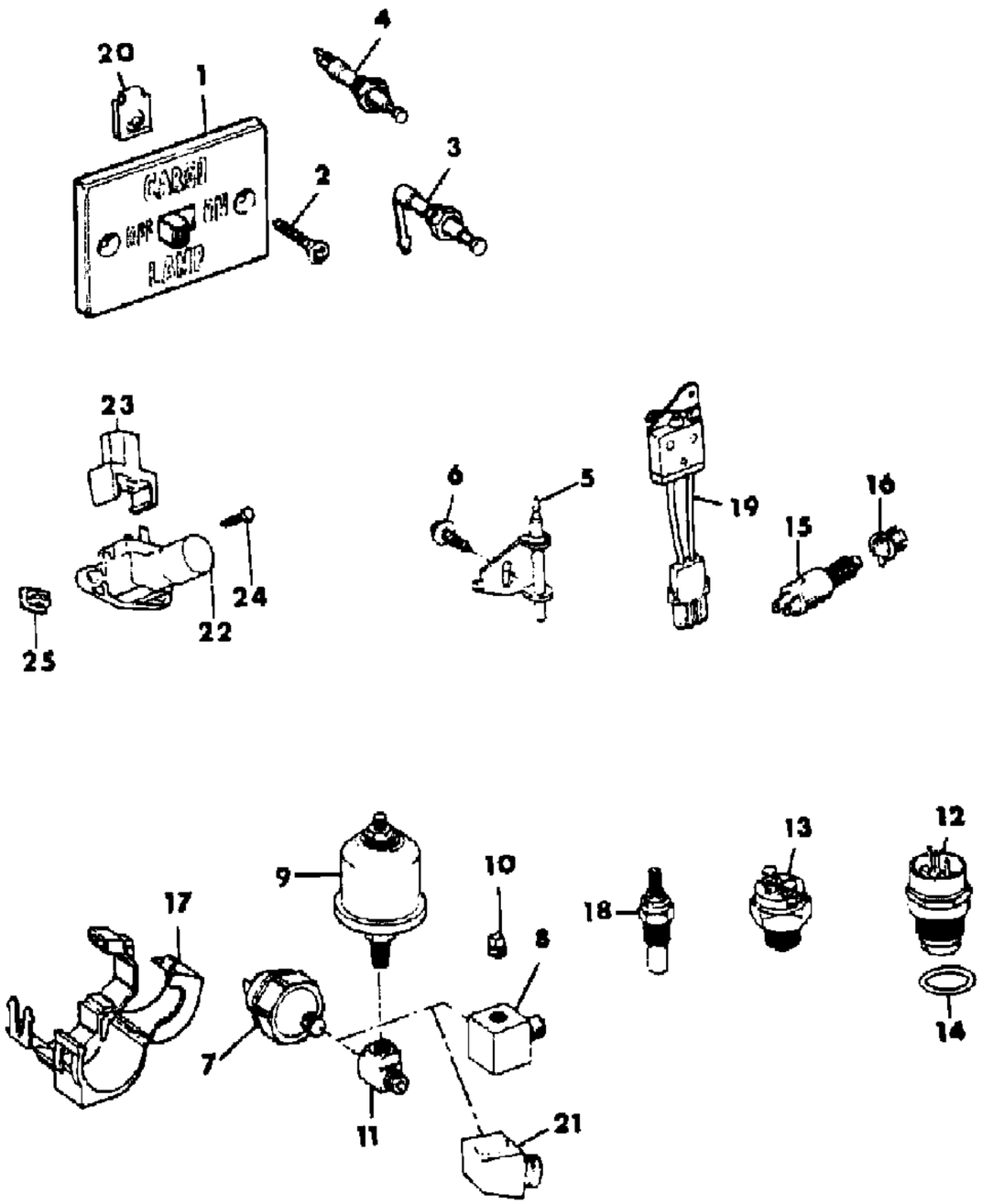

ITEM	PART NUMBER	QTY	BODY	MODEL	DESCRIPTION
1	J545 1489	1			SWITCH, Dome Lamp
2					SCREW
	J400 4955	2		15,16,1	
	J400 2657	2		25,26,2	
3	J576 1248	3			SWITCH, Dome Lamp
4	J576 4249	1			SWITCH, Dome Lamp
5	J323 2194	1			SWITCH, Parking Brake Warning Lamp
6	J942 1073	1			SCREW
7					SWITCH, Oil Pressure
					1981
	J575 8695	1			Two Terminals
	J323 1347	1			Three Terminals
	J575 8695	1			1982-86
8					FITTING
	J400 6600	1			Six Cylinder
9					SENDING UNIT, Oil Pressure
	J321 2004	1			1981-85
	5300 0834	1			1986
10	J010 3877	1			PLUG
11					FITTING
	J400 5881	1			Eight Cylinder
12	J323 2844	1			SWITCH, Neutral Safety
13	J575 1207	1			SWITCH, Back Up Lamp
14	J812 1142	1			GASKET
15	J535 2620	1			SWITCH, Brake Lamp
16	J535 2622	1			RETAINER
17	J417 5241	1			CONNECTOR
18					SENDING UNIT, Coolant Temperature
	J317 7594	1			1981-85
	J324 2662	1			1986
19	5600 2652	1			SWITCH, Tailgate Safety
20	J400 6402	2			U-NUT
21					FITTING
	J400 5879	1			Eight Cylinder
22	J546 1816	1			SWITCH, Dimmer
23	J417 7111	1			CONNECTOR
24	S941 5260	2			SCREW
25	J098 5640	2			NUT

MODEL CODES
16=Cherokee 2 Dr.(1981-83)
17=Cherokee 2 Dr.(1981-83)
73=Cherokee 2WD-2 Dr.(1984-86)
74=Cherokee 2WD-4 Dr.(1984-86)
18=Cherokee 4 Dr.(1981-83)
77=Cherokee 4WD-2 Dr.(1984-86)
78=Cherokee 4WD-4 Dr.(1984-86)
85=CJ-5 (1981-83)
86=CJ-6(1981)
87=CJ-7(1981-86)
88=CJ-8, Scrambler(1981-86)
64=Comanche 2WD-6 Ft. Box(1986)
66=Comanche 2WD-7 Ft. Box(1986)
63=Comanche 4WD-6 Ft. Box(1986)
65=Comanche 4WD-7 Ft. Box(1986)
15=Grand Wagoneer 4 Dr.(1984-86)
25=J-10 Truck 7 Ft. Box(1981-84)
26=J10 Truck 8 Ft. Box(1981-86)
27=J-20 Truck 8 Ft. Box(1981-86)
15=Wagoneer 4 Dr.(1981-83)
75=Wagoneer 4WD-4 Dr.(1984-86)

BODY
CJ=CJ-5, CJ-6, CJ-7, CJ-8, Scrambler(1981-86)
MJ=Comanche Pickup(1986)

STYLES
SJ=Wagoneer(1981-83), Grand Wagoneer(1984-86), Cherokee(1981-83), J-10, J-20(1981-86)
XJ=Wagoneer(1984-86), Cherokee(1984-86)

AR = Use as Required - = Non Illustrated Part P.A.R. = Paint as Required

« RETURN TO GROUP INDEX

SWITCHES--WINDOWS AND DOOR LOCKS XJ CHEROKEE, XJ WAGONEER, COMANCHE
Figure 8-700

81J08 700

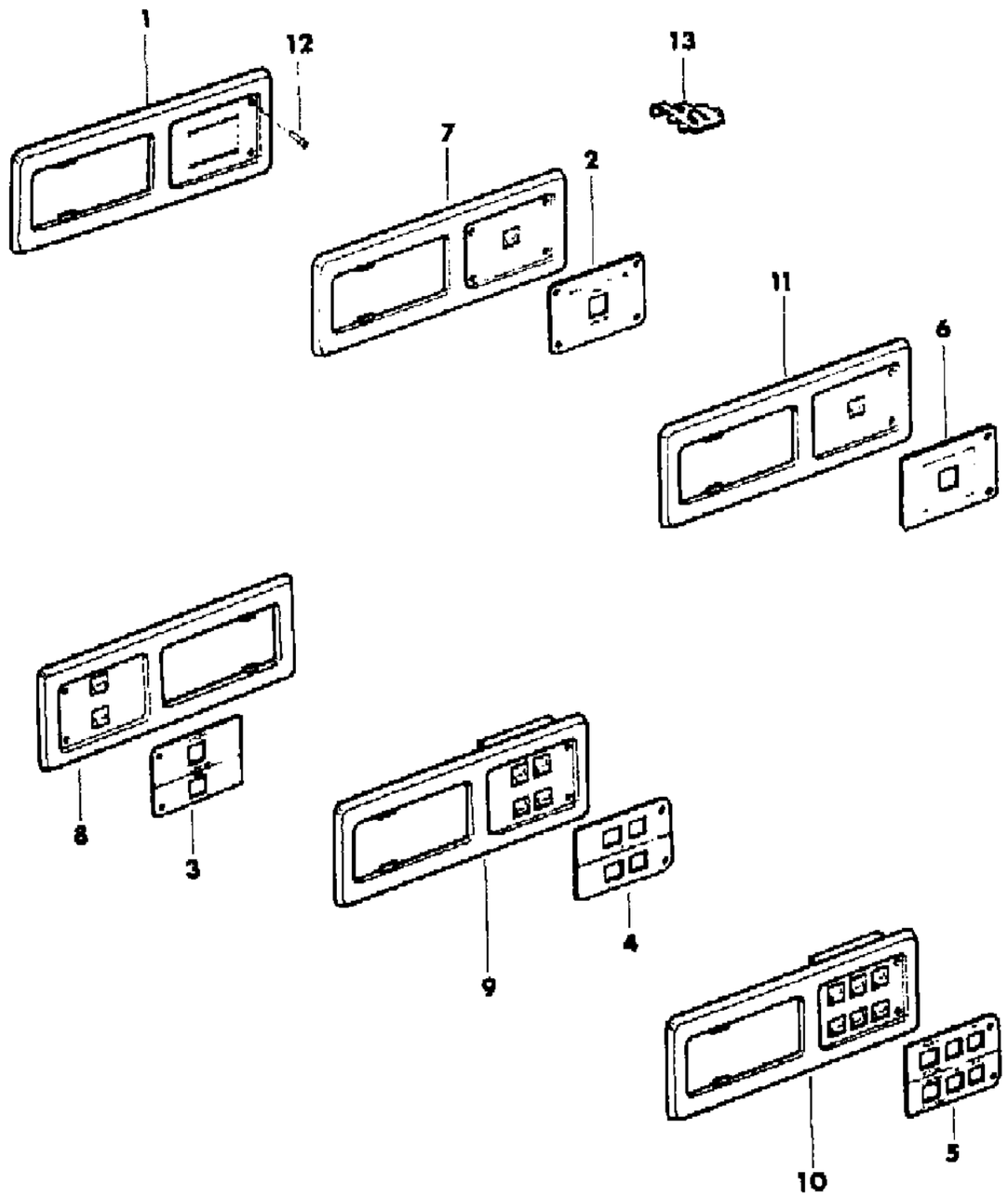

ITEM	PART NUMBER	QTY	BODY	MODEL	DESCRIPTION
1					OVERLAY, w/o Pwr. Wdo., w/o Pwr. Locks ***
	5500 2130	AR			Black
2					OVERLAY, w/o Pwr. Wdo., w/Pwr. Locks ***
	5500 2150-1				Black
3					OVERLAY, w/Pwr. Wdo., w/Pwr. Locks ***
					Right
	5500 2144	AR			Black
	5500 2143	AR			Woodgrain
4					OVERLAY, w/Pwr. Wdo., w/Pwr. Locks ***
					Left
	5500 2142	AR			Black
5					OVERLAY, w/Pwr. Wdo., w/Pwr. Locks ***
					Left
	5500 2140	AR			Black
	5500 2139	AR			Woodgrain
6					OVERLAY, w/Pwr. Wdo., w/Pwr. Locks ***
	5500 2146	AR			Black
	5500 2145	AR			Woodgrain
7	5600 0256	AR			SWITCH, w/Pwr. Locks, w/o Pwr. Wdo.
8					SWITCH, Front Door, w/Pwr. Wdo., w/Pwr. Locks
	5600 0258	1			Right
9					SWITCH, Front Door, w/Pwr. Wdo., w/Pwr. Door Locks
	5600 0255	1			Left
10					SWITCH, Front Door, w/Pwr. Wdo., w/Pwr. Pwr. Locks
	5600 0254	1			Left
11	5600 0259	2			SWITCH, Window, Rear
12	S250 0405	AR			SCREW
13	J400 6536	AR			CLIP

MODEL CODES

16=Cherokee 2 Dr.(1981-83)	78=Cherokee 4WD-4 Dr.(1984-86)	64=Comanche 2WD-6 Ft. Box(1986)	25=J-10 Truck 7 Ft. Box(1981-84)
17=Cherokee 2 Dr.(1981-83)	85=CJ-5 (1981-83)	66=Comanche 2WD-7 Ft. Box(1986)	26=J10 Truck 8 Ft. Box(1981-86)
73=Cherokee 2WD-2 Dr.(1984-86)	86=CJ-6(1981)	63=Comanche 4WD-6 Ft. Box(1986)	27=J-20 Truck 8 Ft. Box(1981-86)
74=Cherokee 2WD-4 Dr.(1984-86)	87=CJ-7(1981-86)	65=Comanche 4WD-7 Ft. Box(1986)	15=Wagoneer 4 Dr.(1981-83)
18=Cherokee 4 Dr.(1981-83)	88=CJ-8, Scrambler(1981-86)	15=Grand Wagoneer 4 Dr.(1984-86)	75=Wagoneer 4WD-4 Dr.(1984-86)
77=Cherokee 4WD-2 Dr.(1984-86)			

BODY
CJ=CJ-5, CJ-6, CJ-7, CJ-8, Scrambler(1981-86)
MJ=Comanche Pickup(1986)

STYLES
SJ=Wagoneer(1981-83), Grand Wagoneer(1984-86), Cherokee(1981-83), J-10, J-20(1981-86)
XJ=Wagoneer(1984-86), Cherokee(1984-86)

AR = Use as Required - = Non Illustrated Part P.A.R. = Paint as Required

« RETURN TO GROUP INDEX

SWITCHES--WINDOWS AND DOOR LOCKS SJ CHEROKEE, SJ WAGONEER, J10, J20
Figure 8-800

81J08 800

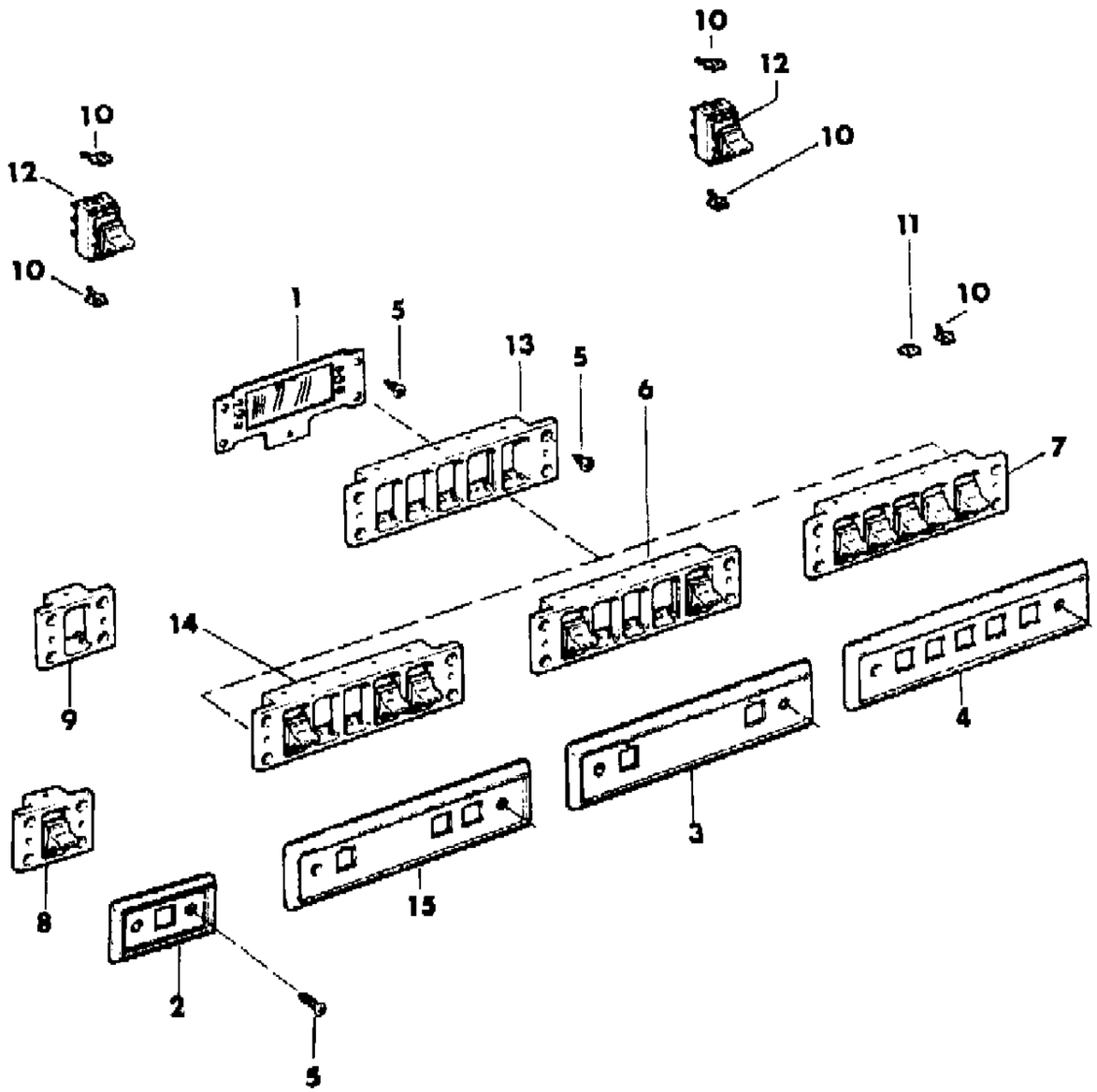

ITEM	PART NUMBER	QTY	BODY	MODEL	DESCRIPTION
1	J575 1033	2			PLATE, Mounting
2					BEZEL, Switch
					1981-85
	J373 1897	2			Brushed Aluminum
	J373 1890	2			Woodgrain
	5501 1081	2			1986
3					BEZEL, Switch
					1981-85
	J575 1880	1			Brushed Aluminum
	J373 4398	1			Woodgrain
	5501 1084	1			1986
4					BEZEL, Switch
					1981-85
	J373 1900	1			Brushed Aluminum
	J373 1893	1			Woodgrain
	5501 1085	1			1986
5	J941 6327	AR			SCREW
6	J372 8048	1			SWITCH ASSEMBLY, Window/Door Lock
7	J372 8030	1			SWITCH ASSEMBLY, Window/Door Lock
8	J371 9090	2			SWITCH ASSEMBLY, Window/Door Lock
9	J360 2413	2			HOUSING, Switch
10	J400 6536	AR			CLIP
11	J400 6546	5			CLIP
12	J372 8042	AR			SWITCH, Window/Door Lock
13	J360 2415	2			HOUSING, Switch
14	J372 8031	1			SWITCH ASSEMBLY, Window/Door Lock
15					BEZEL, Switch
	J575 1885	1			Brushed Aluminum
	J373 1894	1			Woodgrain

MODEL CODES

16=Cherokee 2 Dr.(1981-83)
17=Cherokee 2 Dr.(1981-83)
73=Cherokee 2WD-2 Dr.(1984-86)
74=Cherokee 2WD-4 Dr.(1984-86)
18=Cherokee 4 Dr.(1981-83)
77=Cherokee 4WD-2 Dr.(1984-86)
78=Cherokee 4WD-4 Dr.(1984-86)
85=CJ-5 (1981-83)
86=CJ-6(1981)
87=CJ-7(1981-86)
88=CJ-8, Scrambler(1981-86)
64=Comanche 2WD-6 Ft. Box(1986)
66=Comanche 2WD-7 Ft. Box(1986)
63=Comanche 4WD-6 Ft. Box(1986)
65=Comanche 4WD-7 Ft. Box(1986)
15=Grand Wagoneer 4 Dr.(1984-86)
25=J-10 Truck 7 Ft. Box(1981-84)
26=J10 Truck 8 Ft. Box(1981-86)
27=J-20 Truck 8 Ft. Box(1981-86)
15=Wagoneer 4 Dr.(1981-83)
75=Wagoneer 4WD-4 Dr.(1984-86)

BODY
CJ=CJ-5, CJ-6, CJ-7, CJ-8, Scrambler(1981-86)
MJ=Comanche Pickup(1986)

STYLES
SJ=Wagoneer(1981-83), Grand Wagoneer(1984-86), Cherokee(1981-83), J-10, J-20(1981-86)
XJ=Wagoneer(1984-86), Cherokee(1984-86)

AR = Use as Required - = Non Illustrated Part P.A.R. = Paint as Required

« RETURN TO GROUP INDEX

81J08 900

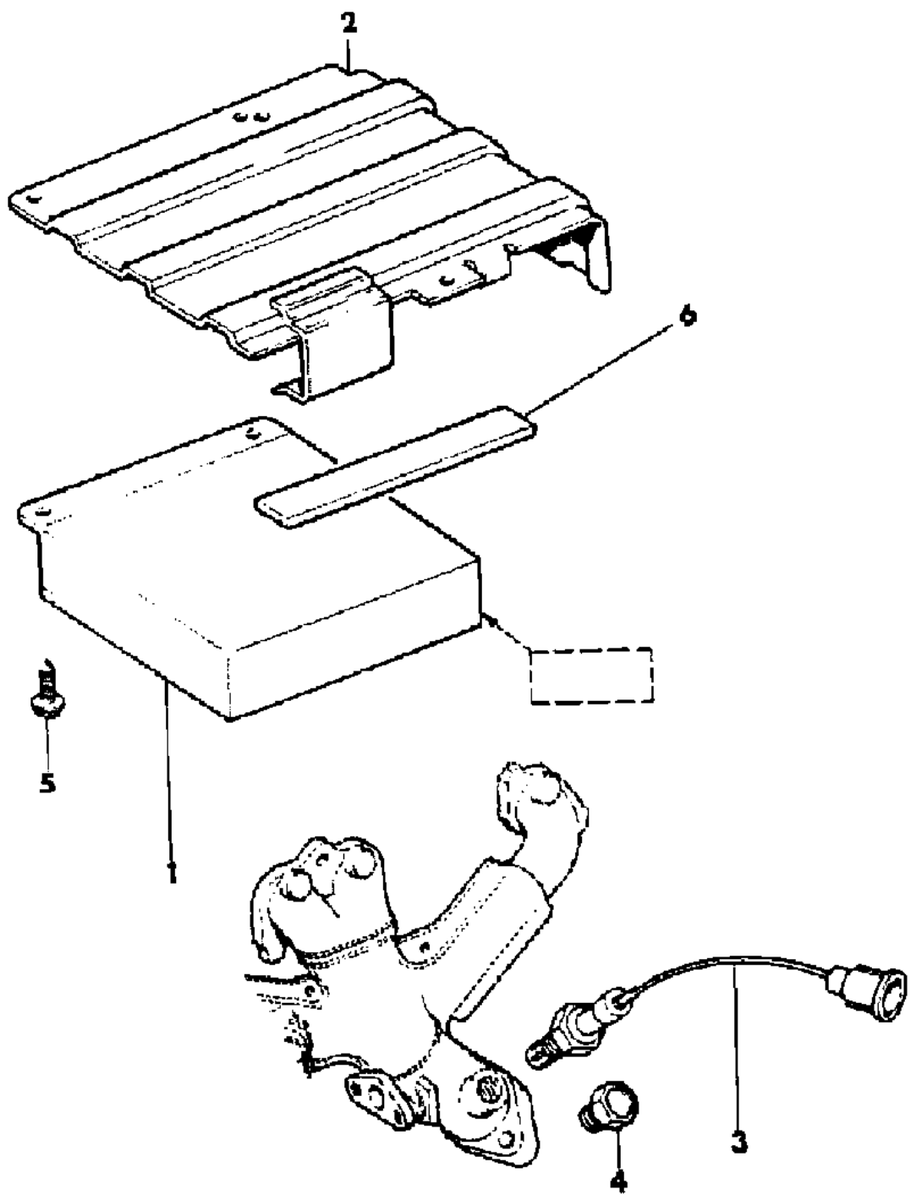

ITEM	PART NUMBER	QTY	BODY	MODEL	DESCRIPTION
1					MICROPROCESSOR ***
					1981
	JR13 2519	1			Four Cylinder
					Six Cylinder
	J323 8590	1			Man. Trans.
	J323 8589	1			Auto. Trans.
					1982
	J813 2519	1			Four Cylinder
					Six Cylinder
	J324 0802	1			Man. Trans.
	J324 0801	1			Auto. Trans.
					1983-86
	3300 0495	1			Tagged H4, 4-GM-Calif.
	3300 1347	1			Tagged B2, 4-AMC
	3300 0491	1			Tagged S3, 6-w/A.T.-Calif.
	3300 0494	1			Tagged S5, 6-w/Man. Trans., Calif.
	3300 1078	1			Tagged 1S, 6-w/Auto. Trans., w/o Calif.
	3300 1079	1			Tagged 2S, 6-w/Man. Trans., w/o Calif.
	3300 1080	1			Tagged 3S, 6-w/Auto. Trans., Calif.
	3300 1082	1			Tagged 5S, 6-w/Man. Trans., Calif.
	3300 0327	1			Tagged S2, w/Man. Trans., Exc. Calif.
	3300 0326	1			Tagged S1, 6-w/Auto. Trans., Exc. Calif.
	3300 1757	1			Tagged RJ, 4-Exc. Calif.
	3300 1759	1			Tagged RL, 4-w/Man. Trans., Calif.
	3300 1760	1			Tagged RM, 4-w/Auto. Trans., Calif.
	5300 1948	1			Tagged RN, 4-Canada-49-States
	5300 1949	1			Tagged RP, 4-Calif.
	3300 1748	1			Tagged SE, 6-w/Auto. Trans., Exc. Calif.
	3300 1749	1			Tagged SF, 6-w/Man. Trans., Exc. Calif., 6-Canada
	3300 1750	1			Tagged SG, 6-w/Auto. Trans.
	3300 1751	1			Tagged SH, 6-w/Man. Trans., Calif.
	3300 2049	1			Tagged SD, 6-w/Man. Trans., Japan
2					BRACKET, Microprocessor
	J813 2024	1			Four Cylinder
					Six Cylinder
	J576 1765	1			1981-82
	J576 2646	1			1983-86
3					SENSOR, Oxygen
					Four Cylinder

MODEL CODES
16=Cherokee 2 Dr.(1981-83)
17=Cherokee 2 Dr.(1981-83)
73=Cherokee 2WD-2 Dr.(1984-86)
74=Cherokee 2WD-4 Dr.(1984-86)
18=Cherokee 4 Dr.(1981-83)
77=Cherokee 4WD-2 Dr.(1984-86)
78=Cherokee 4WD-4 Dr.(1984-86)
85=CJ-5 (1981-83)
86=CJ-6(1981)
87=CJ-7(1981-86)
88=CJ-8, Scrambler(1981-86)
64=Comanche 2WD-6 Ft. Box(1986)
66=Comanche 2WD-7 Ft. Box(1986)
63=Comanche 4WD-6 Ft. Box(1986)
65=Comanche 4WD-7 Ft. Box(1986)
15=Grand Wagoneer 4 Dr.(1984-86)
25=J-10 Truck 7 Ft. Box(1981-84)
26=J10 Truck 8 Ft. Box(1981-86)
27=J-20 Truck 8 Ft. Box(1981-86)
15=Wagoneer 4 Dr.(1981-83)
75=Wagoneer 4WD-4 Dr.(1984-86)

BODY
CJ=CJ-5, CJ-6, CJ-7, CJ-8, Scrambler(1981-86)
MJ=Comanche Pickup(1986)

STYLES
SJ=Wagoneer(1981-83), Grand Wagoneer(1984-86), Cherokee(1981-83), J-10, J-20(1981-86)
XJ=Wagoneer(1984-86), Cherokee(1984-86)

AR = Use as Required - = Non Illustrated Part P.A.R. = Paint as Required

81J08 900

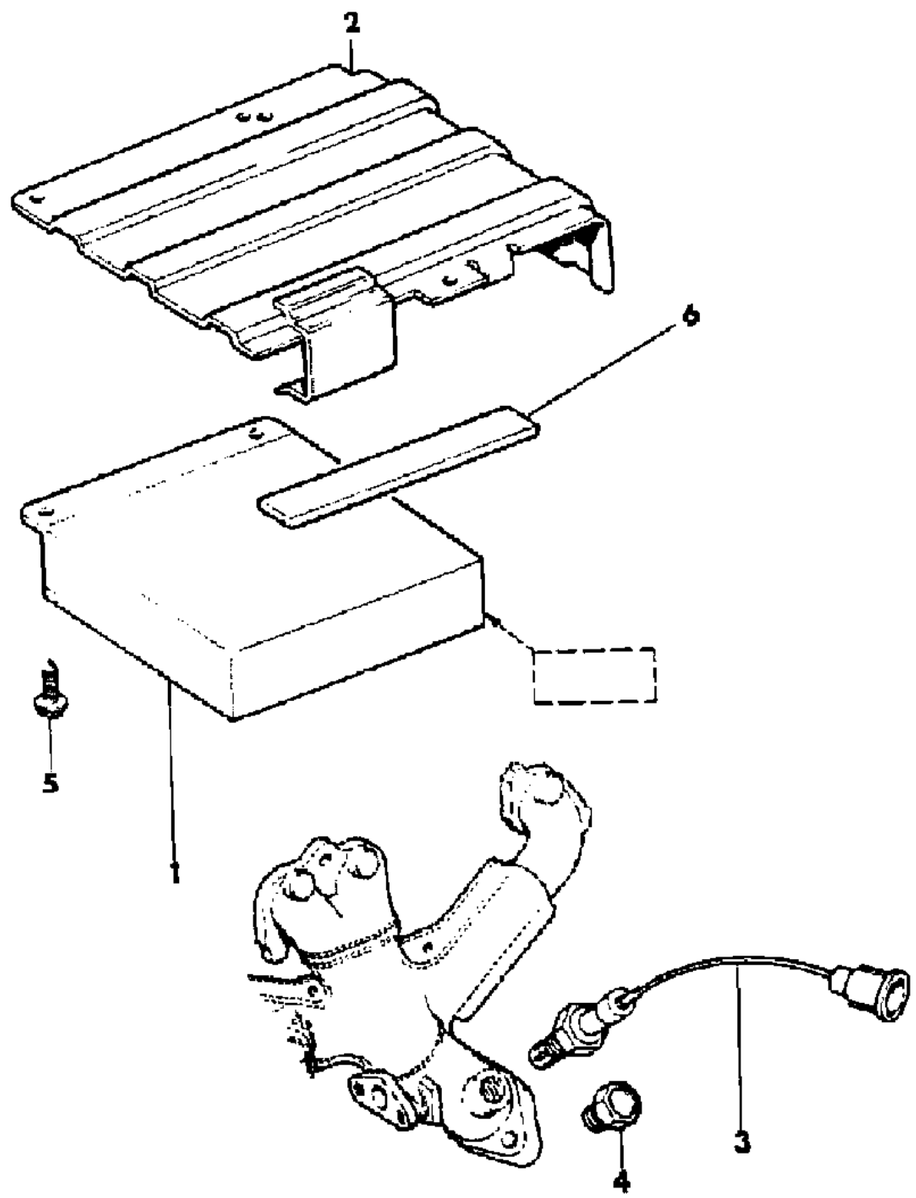

ITEM	PART NUMBER	QTY	BODY	MODEL	DESCRIPTION
	J324 0083	1			1981-82
	3300 2455	1			1983-86
	3300 2455	1			Six Cylinder
4	J420 0413	1			PLUG
5	S016 3210	3			SCREW
6	J323 3062	1			PAD

MODEL CODES

16=Cherokee 2 Dr.(1981-83)
17=Cherokee 2 Dr.(1981-83)
73=Cherokee 2WD-2 Dr.(1984-86)
74=Cherokee 2WD-4 Dr.(1984-86)
18=Cherokee 4 Dr.(1981-83)
77=Cherokee 4WD-2 Dr.(1984-86)
78=Cherokee 4WD-4 Dr.(1984-86)
85=CJ-5 (1981-83)
86=CJ-6(1981)
87=CJ-7(1981-86)
88=CJ-8, Scrambler(1981-86)
64=Comanche 2WD-6 Ft. Box(1986)
66=Comanche 2WD-7 Ft. Box(1986)
63=Comanche 4WD-6 Ft. Box(1986)
65=Comanche 4WD-7 Ft. Box(1986)
15=Grand Wagoneer 4 Dr.(1984-86)
25=J-10 Truck 7 Ft. Box(1981-84)
26=J10 Truck 8 Ft. Box(1981-86)
27=J-20 Truck 8 Ft. Box(1981-86)
15=Wagoneer 4 Dr.(1981-83)
75=Wagoneer 4WD-4 Dr.(1984-86)

BODY
CJ=CJ-5, CJ-6, CJ-7, CJ-8, Scrambler(1981-86)
MJ=Comanche Pickup(1986)

STYLES
SJ=Wagoneer(1981-83), Grand Wagoneer(1984-86), Cherokee(1981-83), J-10, J-20(1981-86)
XJ=Wagoneer(1984-86), Cherokee(1984-86)

AR = Use as Required - = Non Illustrated Part P.A.R. = Paint as Required

MICROPROCESSORS AND OXYGEN SENSORS XJ CHEROKEE, XJ WAGONEER, COMANCHE
Figure 8-1000

81J08 1000

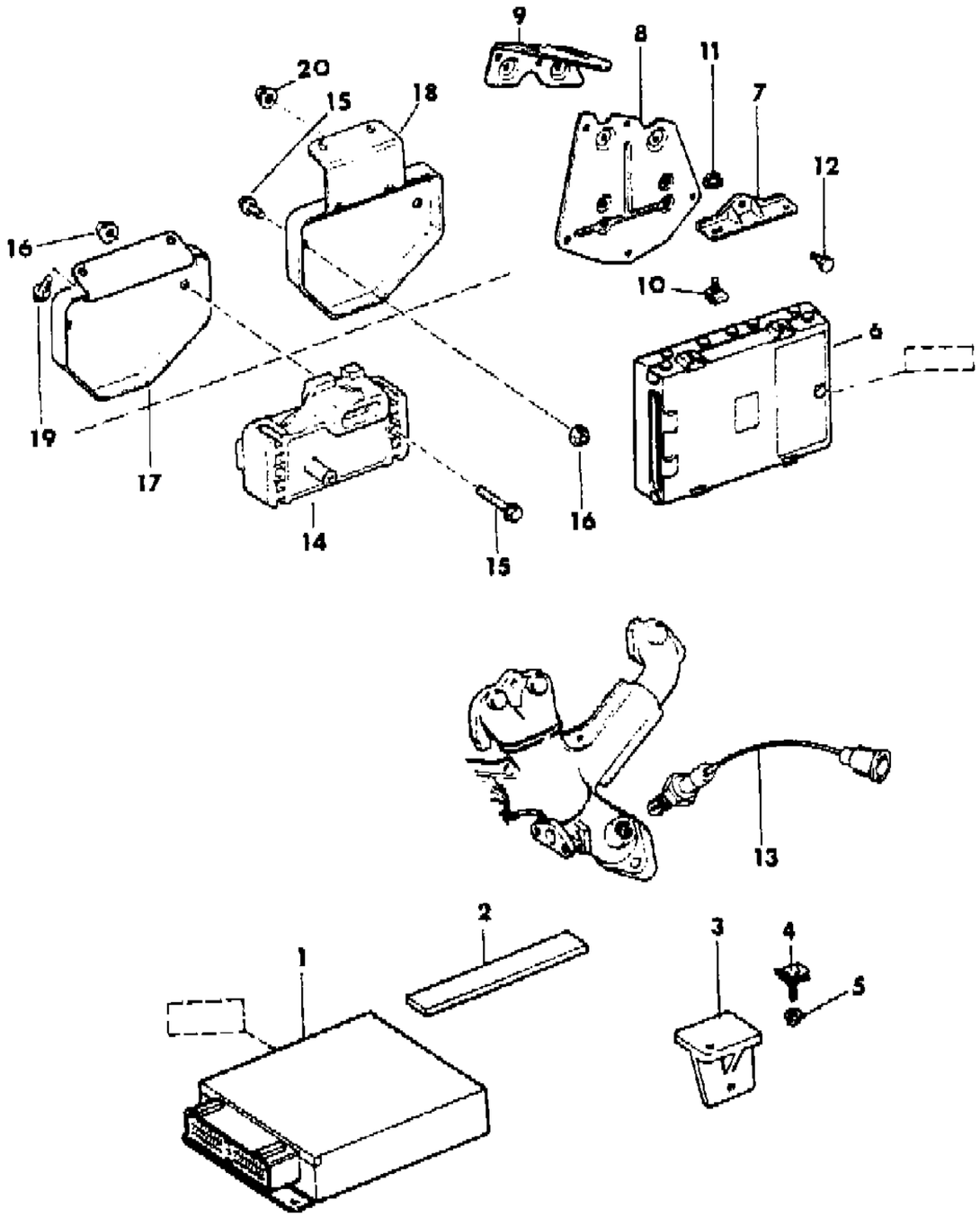

ITEM	PART NUMBER	QTY	BODY	MODEL	DESCRIPTION
1					MICROPROCESSOR ***
					Four Cylinder
					Man. Trans.
	3300 1347	1			1984: US-49 States, CANADA, High Altitude
	3300 1759	1			1984: US-California
	5300 1948	1			1985: US-49 States, CANADA, High Altitude
	5300 1949	1			1985: US-California
					Auto. Trans.
	3300 1758	1			1984: US-49 States, CANADA, High Altitude
	3300 1760	1			1984: US-California
	5300 1950	1			1985: US-49 States, CANADA, High Altitude
	5300 1951	1			1985: US-California
					Six Cylinder
	5300 2775	1			With Manual Transmission
					Auto. Trans.
	3300 2019	1			1984
					1985
	3300 2019	1			Up To Serial No. 130350
	5300 2655	1			Aft. Serial No. 130350
2	J323 3062	1			PAD
3					BRACKET, Microprocessor
	3300 1781	1			1984-85
4					BOLT
	3420 1821	4			1984-85
5					NUT
	J420 0408	2			1984-85
6					MICROPROCESSOR ***
					1986
					Four Cylinder
	5300 2099	1			Man. Trans.
	5300 2100	1			Auto. Trans.
					Six Cylinder
	5300 2775	1			Man. Trans.
	5300 2655	1			Auto. Trans.
7					BRACKET, Microprocessor
	5300 2103	1			1986: Six Cylinder
8	5300 3933	1			BRACKET
9					BRACKET
	5501 0821	1			1986: Six Cylinder

MODEL CODES

16=Cherokee 2 Dr.(1981-83)	78=Cherokee 4WD-4 Dr.(1984-86)	64=Comanche 2WD-6 Ft. Box(1986)	25=J-10 Truck 7 Ft. Box(1981-84)
17=Cherokee 2 Dr.(1981-83)	85=CJ-5 (1981-83)	66=Comanche 2WD-7 Ft. Box(1986)	26=J10 Truck 8 Ft. Box(1981-86)
73=Cherokee 2WD-2 Dr.(1984-86)	86=CJ-6(1981)	63=Comanche 4WD-6 Ft. Box(1986)	27=J-20 Truck 8 Ft. Box(1981-86)
74=Cherokee 2WD-4 Dr.(1984-86)	87=CJ-7(1981-86)	65=Comanche 4WD-7 Ft. Box(1986)	15=Wagoneer 4 Dr.(1981-83)
18=Cherokee 4 Dr.(1981-83)	88=CJ-8, Scrambler(1981-86)	15=Grand Wagoneer 4 Dr.(1984-86)	75=Wagoneer 4WD-4 Dr.(1984-86)
77=Cherokee 4WD-2 Dr.(1984-86)			

BODY
CJ=CJ-5, CJ-6, CJ-7, CJ-8, Scrambler(1981-86)
MJ=Comanche Pickup(1986)

STYLES
SJ=Wagoneer(1981-83), Grand Wagoneer(1984-86), Cherokee(1981-83), J-10, J-20(1981-86)
XJ=Wagoneer(1984-86), Cherokee(1984-86)

AR = Use as Required - = Non Illustrated Part P.A.R. = Paint as Required

81J08 1000

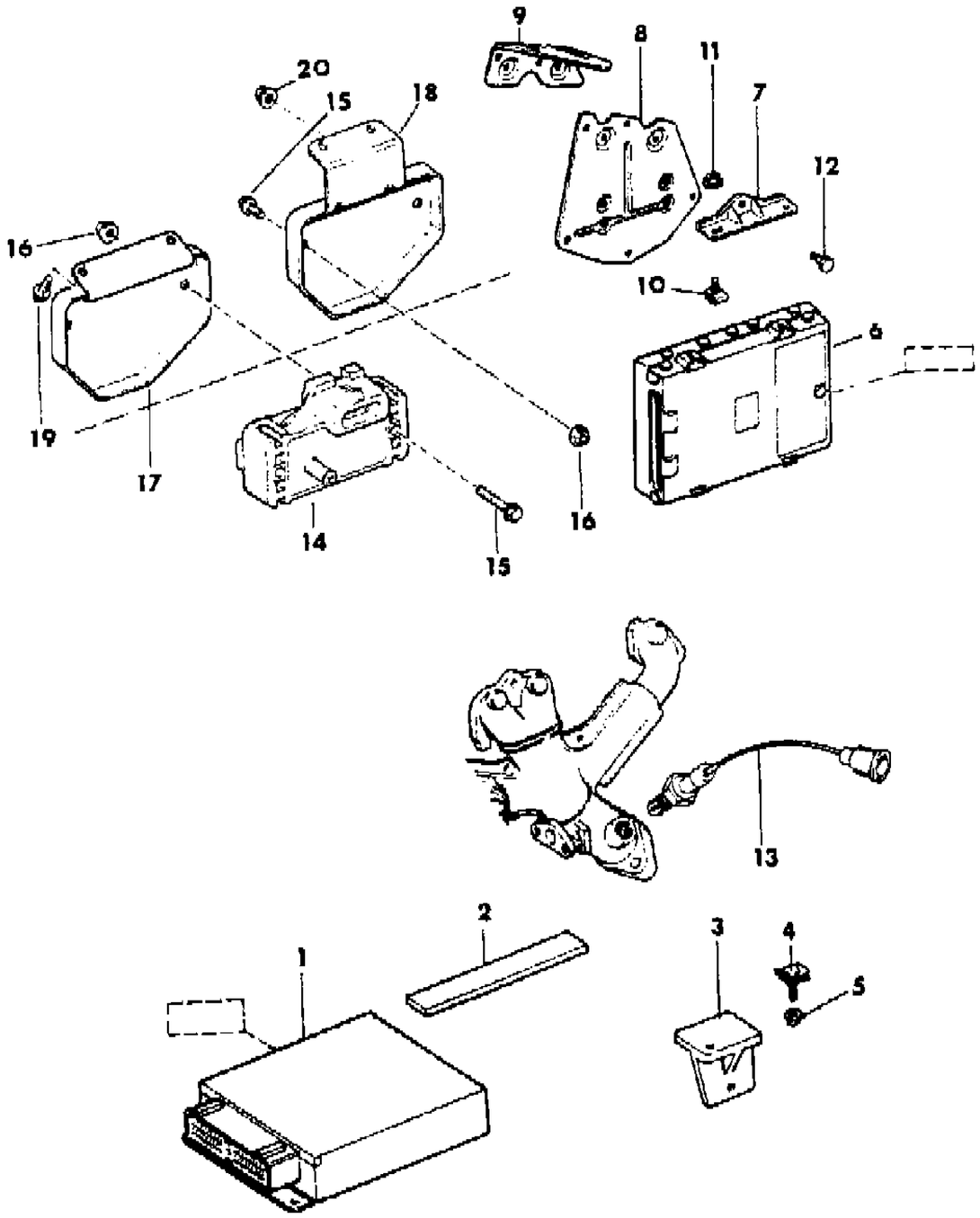

ITEM	PART NUMBER	QTY	BODY	MODEL	DESCRIPTION
10					SCREW
	J420 0319	4			1986: Six Cylinder
11					NUT
	J420 0408	4			1986: Six Cylinder
12	T300 1369	3			SCREW
13					SENSOR, Oxygen
					Four Cylinder
	3300 0598	1			1984
	3300 2455	1			1985
	5300 2106	1			1986
	5300 0886	1			Six Cylinder
14					SENSOR, M.A.P.
					Four Cylinder
	3300 0153	1			1986
	5300 0710	1			Six Cylinder
15	S150 7041	2			BOLT
16	3420 1461	4			NUT
17					BRACKET
	5300 0884	1			Six Cylinder
18					BRACKET
	5300 2332	1			Four Cylinder
19	1150 1608	2			SCREW
20	3420 1358	2			NUT

MODEL CODES

16=Cherokee 2 Dr.(1981-83)
17=Cherokee 2 Dr.(1981-83)
73=Cherokee 2WD-2 Dr.(1984-86)
74=Cherokee 2WD-4 Dr.(1984-86)
18=Cherokee 4 Dr.(1981-83)
77=Cherokee 4WD-2 Dr.(1984-86)
78=Cherokee 4WD-4 Dr.(1984-86)
85=CJ-5 (1981-83)
86=CJ-6(1981)
87=CJ-7(1981-86)
88=CJ-8, Scrambler(1981-86)
64=Comanche 2WD-6 Ft. Box(1986)
66=Comanche 2WD-7 Ft. Box(1986)
63=Comanche 4WD-6 Ft. Box(1986)
65=Comanche 4WD-7 Ft. Box(1986)
15=Grand Wagoneer 4 Dr.(1984-86)
25=J-10 Truck 7 Ft. Box(1981-84)
26=J10 Truck 8 Ft. Box(1981-86)
27=J-20 Truck 8 Ft. Box(1981-86)
15=Wagoneer 4 Dr.(1981-83)
75=Wagoneer 4WD-4 Dr.(1984-86)

BODY
CJ=CJ-5, CJ-6, CJ-7, CJ-8, Scrambler(1981-86)
MJ=Comanche Pickup(1986)

STYLES
SJ=Wagoneer(1981-83), Grand Wagoneer(1984-86), Cherokee(1981-83), J-10, J-20(1981-86)
XJ=Wagoneer(1984-86), Cherokee(1984-86)

AR = Use as Required - = Non Illustrated Part P.A.R. = Paint as Required

MICROPROCESSORS AND OXYGEN SENSORS SIX CYLINDER SJ CHEROKEE, SJ WAGONEER, J10, J20
Figure 8-1100

81J08 1100

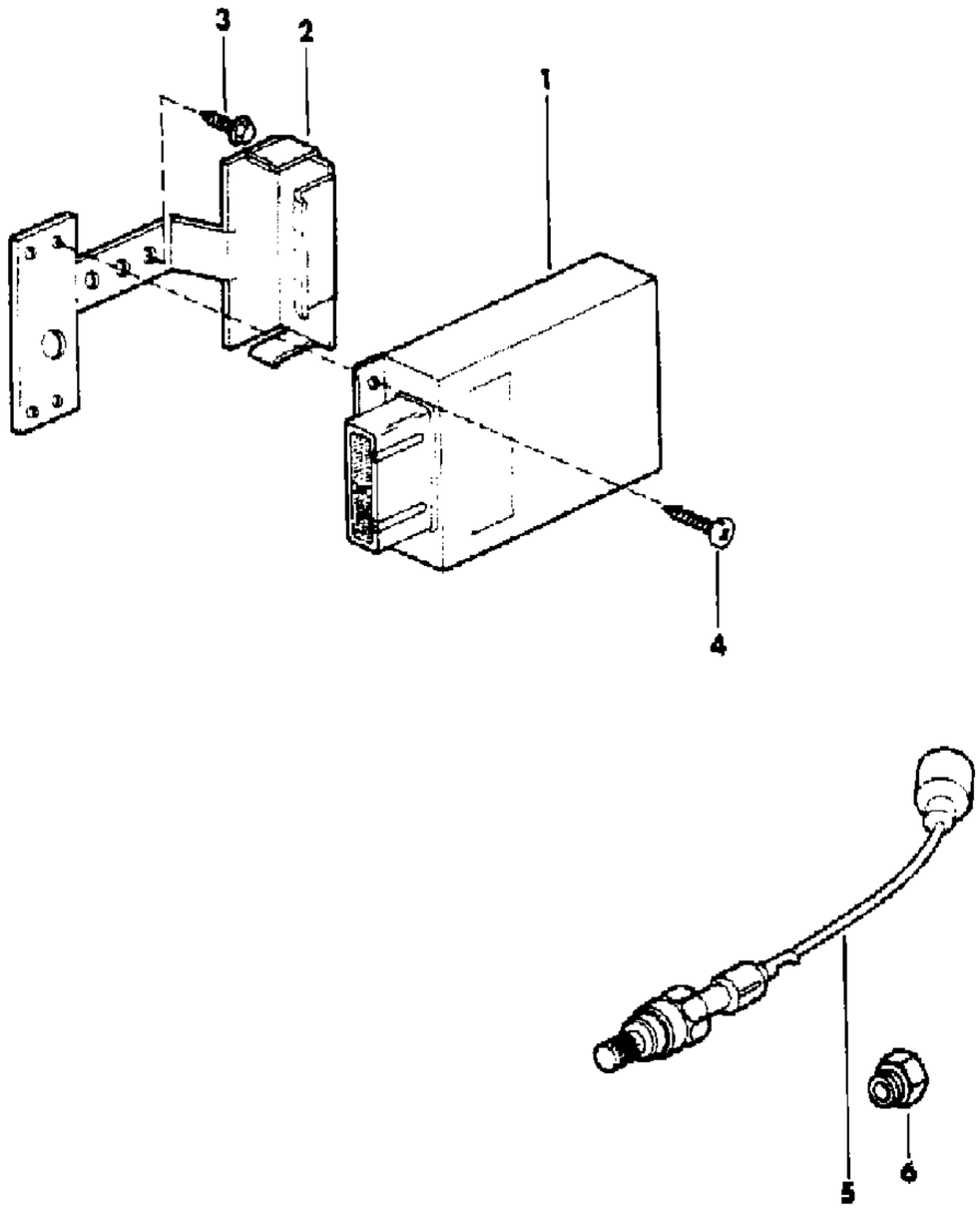

ITEM	PART NUMBER	QTY	BODY	MODEL	DESCRIPTION
1					MICROPROCESSOR ***
					Man. Trans.
	J323 8590	1			1981
	J324 0802	1			1982
					1983
	3300 1079	1			US-49 States, 6-Cyl., Man. Trans., Exc. Calif., Tagged 2S
	3300 0327	1			US-49 States, 6-Cyl. Eng., Man. Trans., Exc. Calif., Tagged S2
	5300 0523	1			US-Calif., Tagged S7, Man. Trans.
	3300 1083	1			US-Calif., Tagged 7S, Man. Trans.
	3300 1744	1			1984, 6-Man. Trans.
	3300 1749	1			1985, 6-Man., Exc. Calif. (6-Canada)
	3300 1744				1986, 6-Man. Trans., (Calif.-Canada)
	3300 1749	1			US-49 States, 6-Man.
	3300 1744	1			US-Calif., SB6, 6-Man. Trans.
					Auto. Trans.
	J323 8589	1			1981
	J324 0801	1			1982
					1983
	3300 1078	1			US-49 States, Tagged 1S, 6-Cyl. Eng.
	3300 0326	1			US-49 States, Tagged S1, 6-Cyl. Eng.
	5300 0522	1			US-Calif., Tagged S4
	3300 1081	1			US-Calif., Tagged 4S, 6-Cyl.,
	3300 1743	1			1984-86, 6-Auto. Trans.
2	J576 2646	1			BRACKET
3	J812 0052	3			SCREW
4	J941 4712	2			SCREW
5					SENSOR, Oxygen
	J323 8765	1			1981-83
	3300 0598	1			1984
	3300 2455	1			1985
6	J420 0413	1			PLUG

MODEL CODES

16=Cherokee 2 Dr.(1981-83)	78=Cherokee 4WD-4 Dr.(1984-86)	64=Comanche 2WD-6 Ft. Box(1986)	25=J-10 Truck 7 Ft. Box(1981-84)
17=Cherokee 2 Dr.(1981-83)	85=CJ-5 (1981-83)	66=Comanche 2WD-7 Ft. Box(1986)	26=J10 Truck 8 Ft. Box(1981-86)
73=Cherokee 2WD-2 Dr.(1984-86)	86=CJ-6(1981)	63=Comanche 4WD-6 Ft. Box(1986)	27=J-20 Truck 8 Ft. Box(1981-86)
74=Cherokee 2WD-4 Dr.(1984-86)	87=CJ-7(1981-86)	65=Comanche 4WD-7 Ft. Box(1986)	15=Wagoneer 4 Dr.(1981-83)
18=Cherokee 4 Dr.(1981-83)	88=CJ-8, Scrambler(1981-86)	15=Grand Wagoneer 4 Dr.(1984-86)	75=Wagoneer 4WD-4 Dr.(1984-86)
77=Cherokee 4WD-2 Dr.(1984-86)			

BODY
CJ=CJ-5, CJ-6, CJ-7, CJ-8, Scrambler(1981-86)
MJ=Comanche Pickup(1986)

STYLES
SJ=Wagoneer(1981-83), Grand Wagoneer(1984-86), Cherokee(1981-83), J-10, J-20(1981-86)
XJ=Wagoneer(1984-86), Cherokee(1984-86)

AR = Use as Required - = Non Illustrated Part P.A.R. = Paint as Required

« RETURN TO GROUP INDEX

BATTERY TRAYS AND CABLES CJ-5,6,7,8, SCRAMBLER
Figure 8-1200

81J08 1200

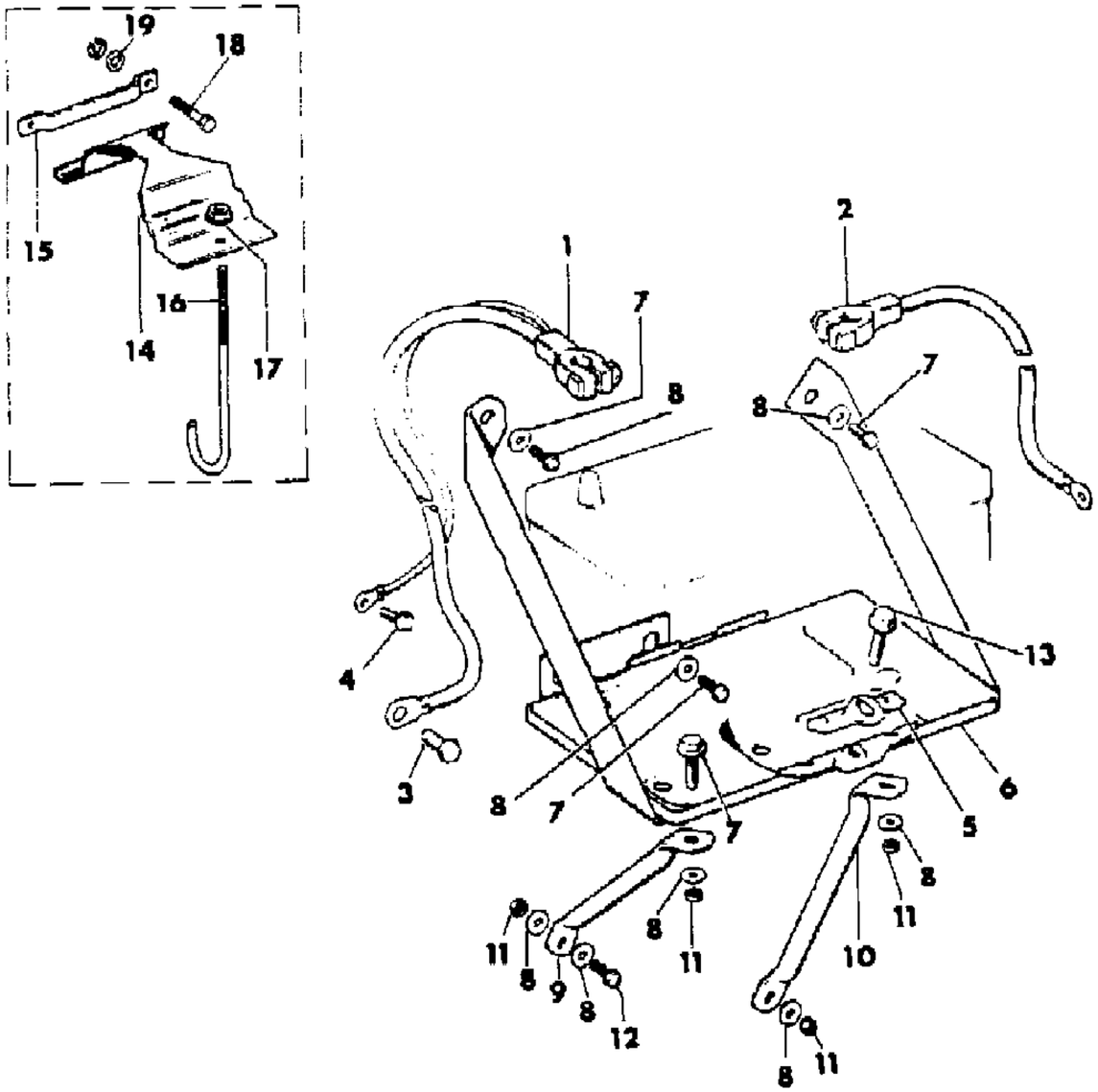

ITEM	PART NUMBER	QTY	BODY	MODEL	DESCRIPTION
1					CABLE, Negative
	J575 2037	1			GM Four Cylinder
	J576 4178	1			AMC Four Cylinder
	J546 5067	1			EXPORT, Four Cylinder
					Six Cylinder
	J546 5067	1			
	J575 7433	1			EXPORT
	J546 5067	1			Eight Cylinder
					Diesel
					EXPORT
	J575 1909	1			Left Hand Drive
	J575 7436	1			Right Hand Drive
2					CABLE, Positive
	J575 2038	1			GM Four Cylinder
	J576 4162	1			AMC Six Cylinder
	J575 8520	1			EXPORT, Four Cylinder
					Six Cylinder
	J535 0457	1			
	J575 7435	1			EXPORT
	J535 0457	1			Eight Cylinder
					Diesel
					EXPORT
	J575 1908	1			Left Hand Drive
	J575 7440	1			Right Hand Drive
3	J018 0120	1			BOLT
4	J400 4801	1			BOLT
5	J322 6119	1			CLAMP
6					BOX, Battery
	J546 9970	1			1981-82
	J576 4665	1			1983-86
	J575 2683	1			EXPORT, Right Hand Drive
7	S042 3561	AR			BOLT
8	J012 0393	AR			WASHER
9					SUPPORT
	J097 0432	1			
	J575 7451	1			EXPORT, Right Hand Drive
10					SUPPORT
	J098 6491	1			
	J575 7452	1			EXPORT, Right Hand Drive

MODEL CODES

16=Cherokee 2 Dr.(1981-83)
17=Cherokee 2 Dr.(1981-83)
73=Cherokee 2WD-2 Dr.(1984-86)
74=Cherokee 2WD-4 Dr.(1984-86)
18=Cherokee 4 Dr.(1981-83)
77=Cherokee 4WD-2 Dr.(1984-86)
78=Cherokee 4WD-4 Dr.(1984-86)
85=CJ-5 (1981-83)
86=CJ-6(1981)
87=CJ-7(1981-86)
88=CJ-8, Scrambler(1981-86)
64=Comanche 2WD-6 Ft. Box(1986)
66=Comanche 2WD-7 Ft. Box(1986)
63=Comanche 4WD-6 Ft. Box(1986)
65=Comanche 4WD-7 Ft. Box(1986)
15=Grand Wagoneer 4 Dr.(1984-86)
25=J-10 Truck 7 Ft. Box(1981-84)
26=J10 Truck 8 Ft. Box(1981-86)
27=J-20 Truck 8 Ft. Box(1981-86)
15=Wagoneer 4 Dr.(1981-83)
75=Wagoneer 4WD-4 Dr.(1984-86)

BODY
CJ=CJ-5, CJ-6, CJ-7, CJ-8, Scrambler(1981-86)
MJ=Comanche Pickup(1986)

STYLES
SJ=Wagoneer(1981-83), Grand Wagoneer(1984-86), Cherokee(1981-83), J-10, J-20(1981-86)
XJ=Wagoneer(1984-86), Cherokee(1984-86)

AR = Use as Required - = Non Illustrated Part P.A.R. = Paint as Required

BATTERY TRAYS AND CABLES CJ-5,6,7,8, SCRAMBLER
Figure 8-1200

81J08 1200

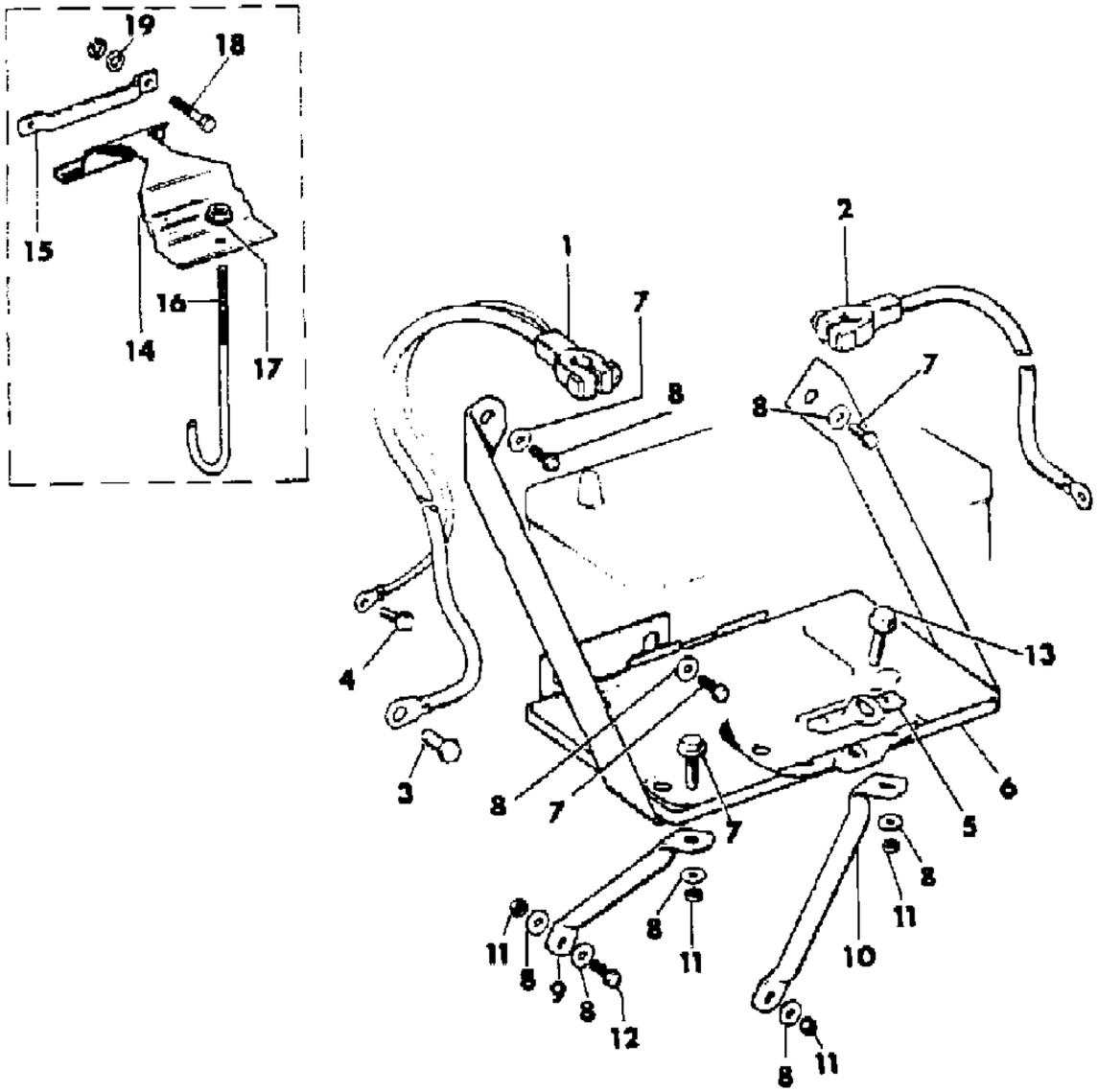

ITEM	PART NUMBER	QTY	BODY	MODEL	DESCRIPTION
11	J027 1184	AR			NUT
12	J018 0077	1			BOLT
13	J400 4455	1			BOLT
14					BRACKET
	J805 1659	1			Severe Use
15					RETAINER
	J805 1546	1			Severe Use
16					BOLT
	J805 1547	1			Severe Use
17					NUT
	S027 3801	1			Severe Use
18					BOLT
	S017 9799	2			Severe Use
19					WASHER
	J400 4894	2			Severe Use

MODEL CODES

16=Cherokee 2 Dr.(1981-83)
17=Cherokee 2 Dr.(1981-83)
73=Cherokee 2WD-2 Dr.(1984-86)
74=Cherokee 2WD-4 Dr.(1984-86)
18=Cherokee 4 Dr.(1981-83)
77=Cherokee 4WD-2 Dr.(1984-86)
78=Cherokee 4WD-4 Dr.(1984-86)
85=CJ-5 (1981-83)
86=CJ-6(1981)
87=CJ-7(1981-86)
88=CJ-8, Scrambler(1981-86)
64=Comanche 2WD-6 Ft. Box(1986)
66=Comanche 2WD-7 Ft. Box(1986)
63=Comanche 4WD-6 Ft. Box(1986)
65=Comanche 4WD-7 Ft. Box(1986)
15=Grand Wagoneer 4 Dr.(1984-86)
25=J-10 Truck 7 Ft. Box(1981-84)
26=J10 Truck 8 Ft. Box(1981-86)
27=J-20 Truck 8 Ft. Box(1981-86)
15=Wagoneer 4 Dr.(1981-83)
75=Wagoneer 4WD-4 Dr.(1984-86)

BODY
CJ=CJ-5, CJ-6, CJ-7, CJ-8, Scrambler(1981-86)
MJ=Comanche Pickup(1986)

STYLES
SJ=Wagoneer(1981-83), Grand Wagoneer(1984-86), Cherokee(1981-83), J-10, J-20(1981-86)
XJ=Wagoneer(1984-86), Cherokee(1984-86)

AR = Use as Required - = Non Illustrated Part P.A.R. = Paint as Required

BATTERY TRAYS AND CABLES XJ CHEROKEE, XJ WAGONEER, COMANCHE
Figure 8-1300

81J08 1300

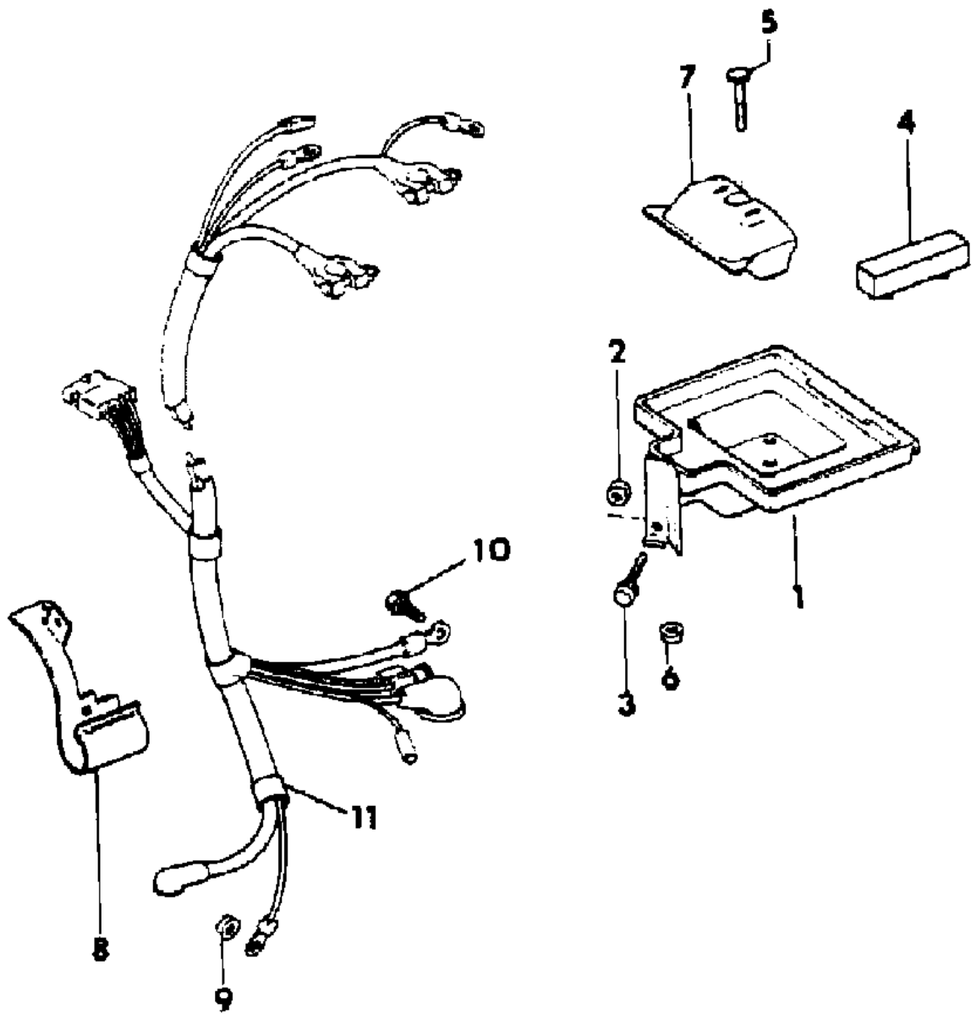

ITEM	PART NUMBER	QTY	BODY	MODEL	DESCRIPTION
1					BOX, Battery
	5200 0687	1			Four Cylinder
	5200 0687	1			Six Cylinder
	5200 1266	1			Diesel
2	3420 1317	2			NUT
3	1150 2693	1			BOLT
4	5200 0689	1			SPACER
5	3420 1894	1			BOLT
6	3420 1918	1			NUT
7	5200 1160	1			CLAMP
8					BRACKET, Battery Cable
	5600 1344	1			Diesel
9	J027 1187	1			NUT
10	J942 8638	1			BOLT
11					WIRING, Battery/Alternator
					Four Cylinder
	5600 1126	1			1984-85
	5600 2098	1			1986
	5600 0760	1			Six Cylinder
	5600 1370	1			Diesel

MODEL CODES
16=Cherokee 2 Dr.(1981-83)
17=Cherokee 2 Dr.(1981-83)
73=Cherokee 2WD-2 Dr.(1984-86)
74=Cherokee 2WD-4 Dr.(1984-86)
18=Cherokee 4 Dr.(1981-83)
77=Cherokee 4WD-2 Dr.(1984-86)
78=Cherokee 4WD-4 Dr.(1984-86)
85=CJ-5 (1981-83)
86=CJ-6(1981)
87=CJ-7(1981-86)
88=CJ-8, Scrambler(1981-86)
64=Comanche 2WD-6 Ft. Box(1986)
66=Comanche 2WD-7 Ft. Box(1986)
63=Comanche 4WD-6 Ft. Box(1986)
65=Comanche 4WD-7 Ft. Box(1986)
15=Grand Wagoneer 4 Dr.(1984-86)
25=J-10 Truck 7 Ft. Box(1981-84)
26=J10 Truck 8 Ft. Box(1981-86)
27=J-20 Truck 8 Ft. Box(1981-86)
15=Wagoneer 4 Dr.(1981-83)
75=Wagoneer 4WD-4 Dr.(1984-86)

BODY
CJ=CJ-5, CJ-6, CJ-7, CJ-8, Scrambler(1981-86)
MJ=Comanche Pickup(1986)

STYLES
SJ=Wagoneer(1981-83), Grand Wagoneer(1984-86), Cherokee(1981-83), J-10, J-20(1981-86)
XJ=Wagoneer(1984-86), Cherokee(1984-86)

AR = Use as Required - = Non Illustrated Part P.A.R. = Paint as Required

« RETURN TO GROUP INDEX

BATTERY TRAYS AND CABLES SIX CYLINDER WITH BOTTOM CLAMP SJ CHEROKEE, SJ WAGONEER, J10, J20
Figure 8-1400

81J08 1400

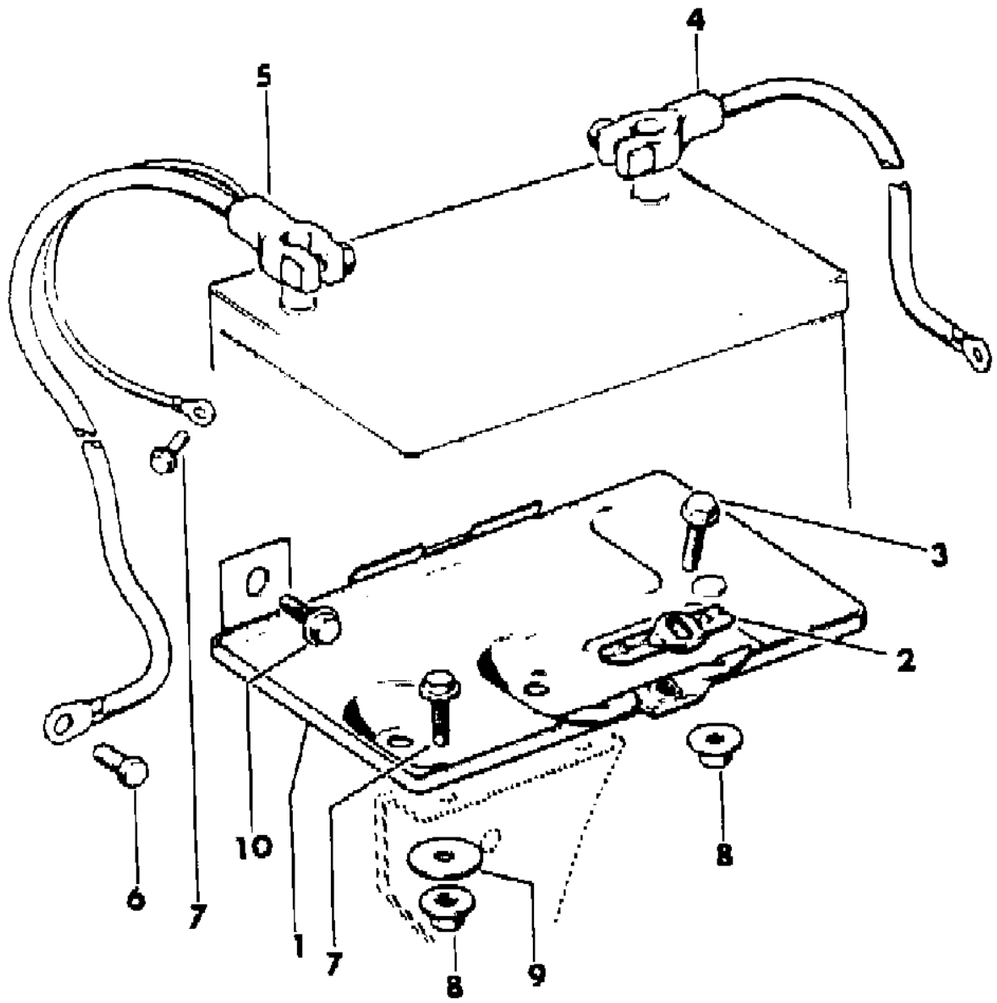

ITEM	PART NUMBER	QTY	BODY	MODEL	DESCRIPTION
1	J546 9964	1			TRAY, Battery
2	J322 6119	1			CLAMP
3	J400 4455	1			BOLT
4	J535 0457	1			CABLE, Positive
5					CABLE, Negative
	J094 6861	1			1981-84
	J576 2380	1			1985-86
6	J018 0120	1			BOLT
7	J400 4801	1			BOLT
8	J027 1184	AR			NUT
9	J012 0393	AR			WASHER
10	S042 3561	AR			BOLT

MODEL CODES
16=Cherokee 2 Dr.(1981-83)
17=Cherokee 2 Dr.(1981-83)
73=Cherokee 2WD-2 Dr.(1984-86)
74=Cherokee 2WD-4 Dr.(1984-86)
18=Cherokee 4 Dr.(1981-83)
77=Cherokee 4WD-2 Dr.(1984-86)
78=Cherokee 4WD-4 Dr.(1984-86)
85=CJ-5 (1981-83)
86=CJ-6(1981)
87=CJ-7(1981-86)
88=CJ-8, Scrambler(1981-86)
64=Comanche 2WD-6 Ft. Box(1986)
66=Comanche 2WD-7 Ft. Box(1986)
63=Comanche 4WD-6 Ft. Box(1986)
65=Comanche 4WD-7 Ft. Box(1986)
15=Grand Wagoneer 4 Dr.(1984-86)
25=J-10 Truck 7 Ft. Box(1981-84)
26=J10 Truck 8 Ft. Box(1981-86)
27=J-20 Truck 8 Ft. Box(1981-86)
15=Wagoneer 4 Dr.(1981-83)
75=Wagoneer 4WD-4 Dr.(1984-86)

BODY
CJ=CJ-5, CJ-6, CJ-7, CJ-8, Scrambler(1981-86)
MJ=Comanche Pickup(1986)

STYLES
SJ=Wagoneer(1981-83), Grand Wagoneer(1984-86), Cherokee(1981-83), J-10, J-20(1981-86)
XJ=Wagoneer(1984-86), Cherokee(1984-86)

AR = Use as Required - = Non Illustrated Part P.A.R. = Paint as Required

« RETURN TO GROUP INDEX

BATTERY TRAYS AND CABLES EIGHT CYLINDER WITH BOTTOM CLAMP SJ CHEROKEE, SJ WAGONEER, J10, J20
Figure 8-1500

81J08 1500

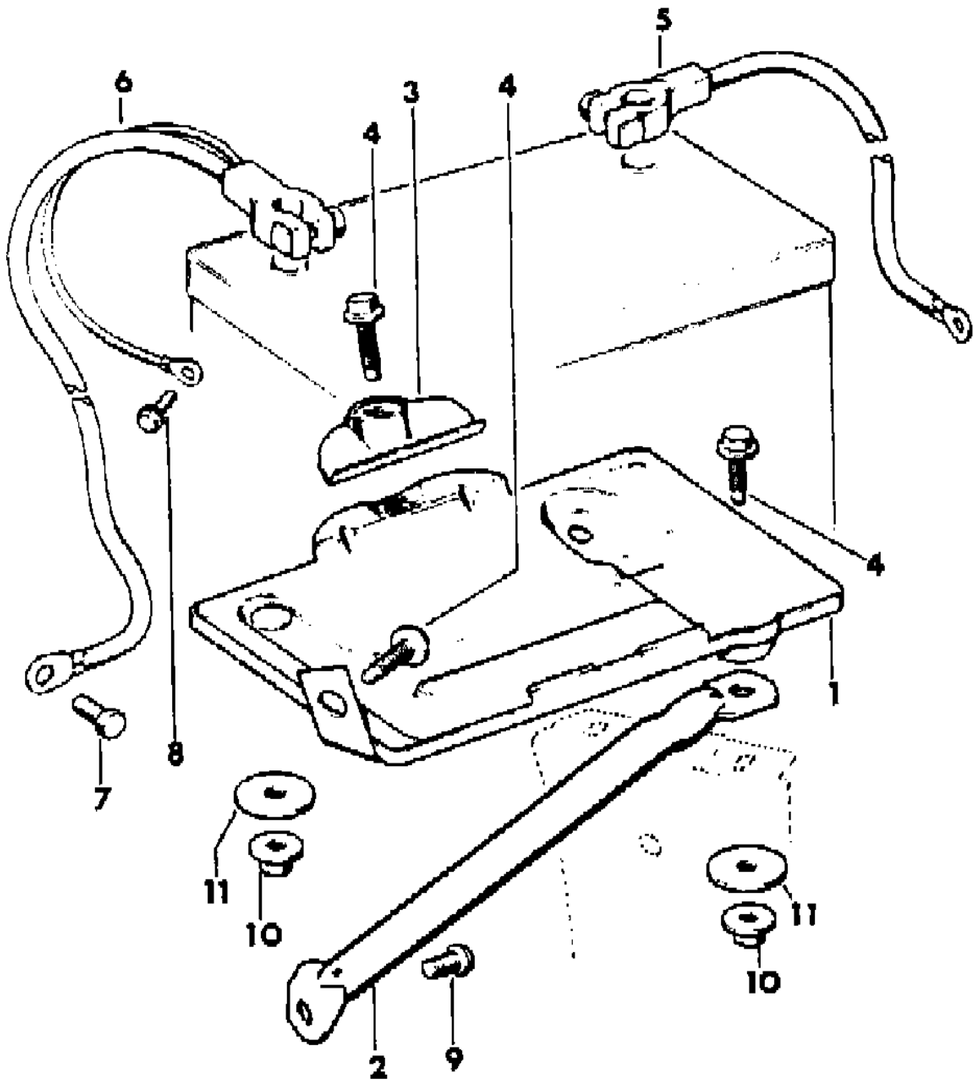

ITEM	PART NUMBER	QTY	BODY	MODEL	DESCRIPTION
1	J546 9975	1			TRAY, Battery
2	J097 7576	1			BRACE
3	J322 6119	1			CLAMP
4	J400 4455	1			BOLT
5	J535 0456	1			CABLE, Positive
6	J093 8988	1			CABLE, Negative
7	J018 0120	1			BOLT
8	J400 4801	1			SCREW
9	S045 4787	1			SCREW
10	J400 4866	AR			NUT
11	J066 4607	AR			NUT
12	J027 1184	AR			NUT
13	S042 3561	AR			BOLT
14	J012 0393	AR			WASHER

MODEL CODES
16=Cherokee 2 Dr.(1981-83)
17=Cherokee 2 Dr.(1981-83)
73=Cherokee 2WD-2 Dr.(1984-86)
74=Cherokee 2WD-4 Dr.(1984-86)
18=Cherokee 4 Dr.(1981-83)
77=Cherokee 4WD-2 Dr.(1984-86)
78=Cherokee 4WD-4 Dr.(1984-86)
85=CJ-5 (1981-83)
86=CJ-6(1981)
87=CJ-7(1981-86)
88=CJ-8, Scrambler(1981-86)
64=Comanche 2WD-6 Ft. Box(1986)
66=Comanche 2WD-7 Ft. Box(1986)
63=Comanche 4WD-6 Ft. Box(1986)
65=Comanche 4WD-7 Ft. Box(1986)
15=Grand Wagoneer 4 Dr.(1984-86)
25=J-10 Truck 7 Ft. Box(1981-84)
26=J10 Truck 8 Ft. Box(1981-86)
27=J-20 Truck 8 Ft. Box(1981-86)
15=Wagoneer 4 Dr.(1981-83)
75=Wagoneer 4WD-4 Dr.(1984-86)

BODY
CJ=CJ-5, CJ-6, CJ-7, CJ-8, Scrambler(1981-86)
MJ=Comanche Pickup(1986)

STYLES
SJ=Wagoneer(1981-83), Grand Wagoneer(1984-86), Cherokee(1981-83), J-10, J-20(1981-86)
XJ=Wagoneer(1984-86), Cherokee(1984-86)

AR = Use as Required - = Non Illustrated Part P.A.R. = Paint as Required

« RETURN TO GROUP INDEX

BATTERY TRAYS AND CABLES 1986 TOP HOLD DOWN SJ WAGONEER, J10, J20
Figure 8-1600

81J08 1600

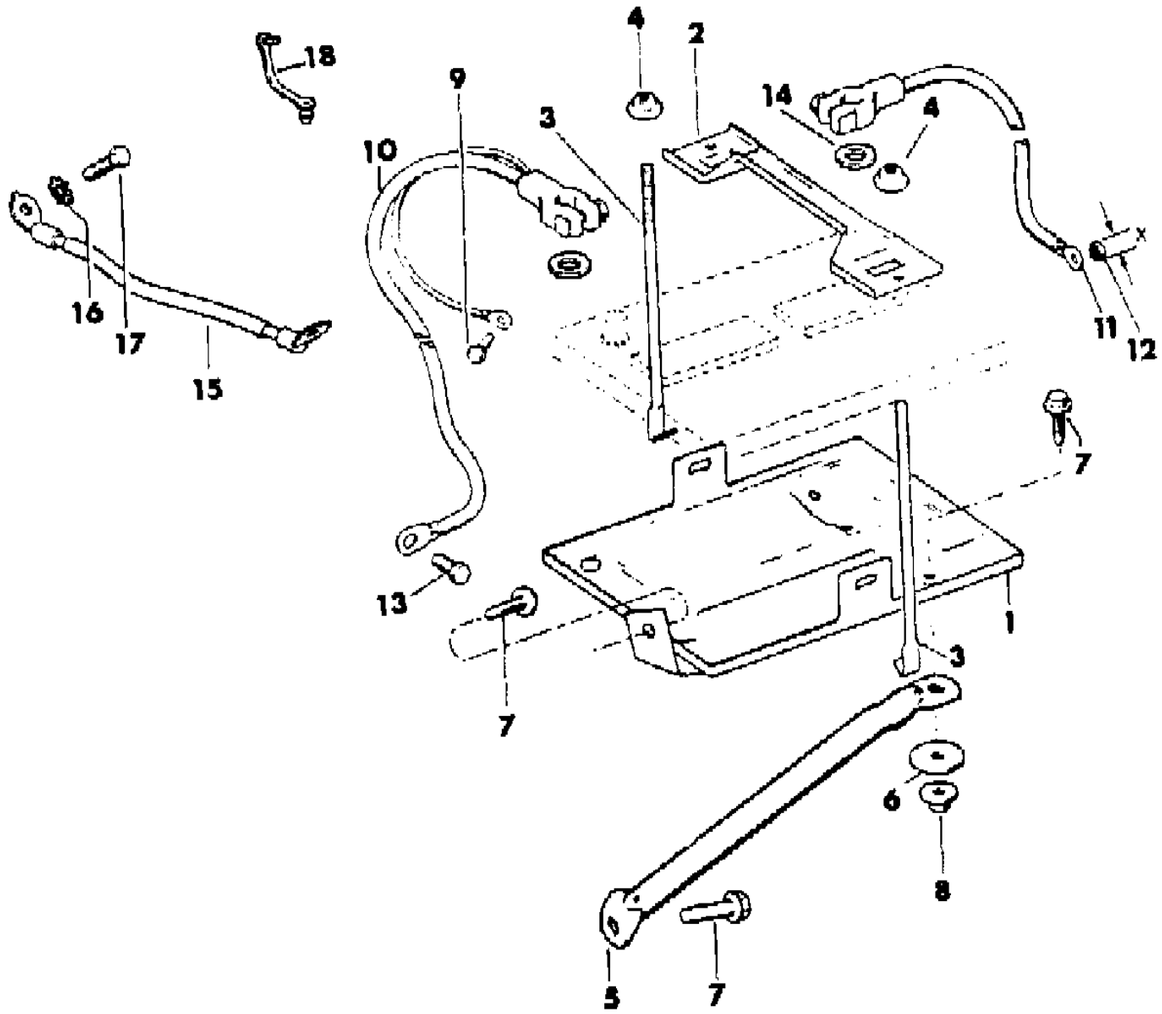

ITEM	PART NUMBER	QTY	BODY	MODEL	DESCRIPTION
1	5501 4359	1			TRAY, Battery
2	5501 4361	1			BRACKET
3	5501 4362	2			ROD
4	3420 1246	2			NUT
5	J097 7576	1			BRACE
6	J066 4607	2			WASHER
7	J400 4455	3			BOLT
8	J400 4866	3			NUT
9	J400 4801	1			BOLT
10	J546 5067	1			CABLE, Negative
11					CABLE, Positive
	J535 0457	1			Six Cylinder
	J535 0456	1			Eight Cylinder
12					NUT
	3420 2346	2			M8-1.25
	J400 6715	2			5/16-18
13	J018 0120	1			BOLT
14	J522 7487	2			WASHER, Anti-Corrosion
15					CABLE, Body Ground
	J576 2380	1			Six Cylinder
	J093 8988	1			Eight Cylinder
16	J013 8489	4			WASHER
17	J018 0122	1			BOLT
18	J400 1712	1			CLIP

MODEL CODES

16=Cherokee 2 Dr.(1981-83)
17=Cherokee 2 Dr.(1981-83)
73=Cherokee 2WD-2 Dr.(1984-86)
74=Cherokee 2WD-4 Dr.(1984-86)
18=Cherokee 4 Dr.(1981-83)
77=Cherokee 4WD-2 Dr.(1984-86)
78=Cherokee 4WD-4 Dr.(1984-86)
85=CJ-5 (1981-83)
86=CJ-6(1981)
87=CJ-7(1981-86)
88=CJ-8, Scrambler(1981-86)
64=Comanche 2WD-6 Ft. Box(1986)
66=Comanche 2WD-7 Ft. Box(1986)
63=Comanche 4WD-6 Ft. Box(1986)
65=Comanche 4WD-7 Ft. Box(1986)
15=Grand Wagoneer 4 Dr.(1984-86)
25=J-10 Truck 7 Ft. Box(1981-84)
26=J10 Truck 8 Ft. Box(1981-86)
27=J-20 Truck 8 Ft. Box(1981-86)
15=Wagoneer 4 Dr.(1981-83)
75=Wagoneer 4WD-4 Dr.(1984-86)

BODY
CJ=CJ-5, CJ-6, CJ-7, CJ-8, Scrambler(1981-86)
MJ=Comanche Pickup(1986)

STYLES
SJ=Wagoneer(1981-83), Grand Wagoneer(1984-86), Cherokee(1981-83), J-10, J-20(1981-86)
XJ=Wagoneer(1984-86), Cherokee(1984-86)

AR = Use as Required - = Non Illustrated Part P.A.R. = Paint as Required

« RETURN TO GROUP INDEX

BATTERY TRAYS AND CABLES EXPORT--RIGHT HAND DRIVE SJ CHEROKEE, SJ WAGONEER, J10, J20
Figure 8-1700

81J08 1700

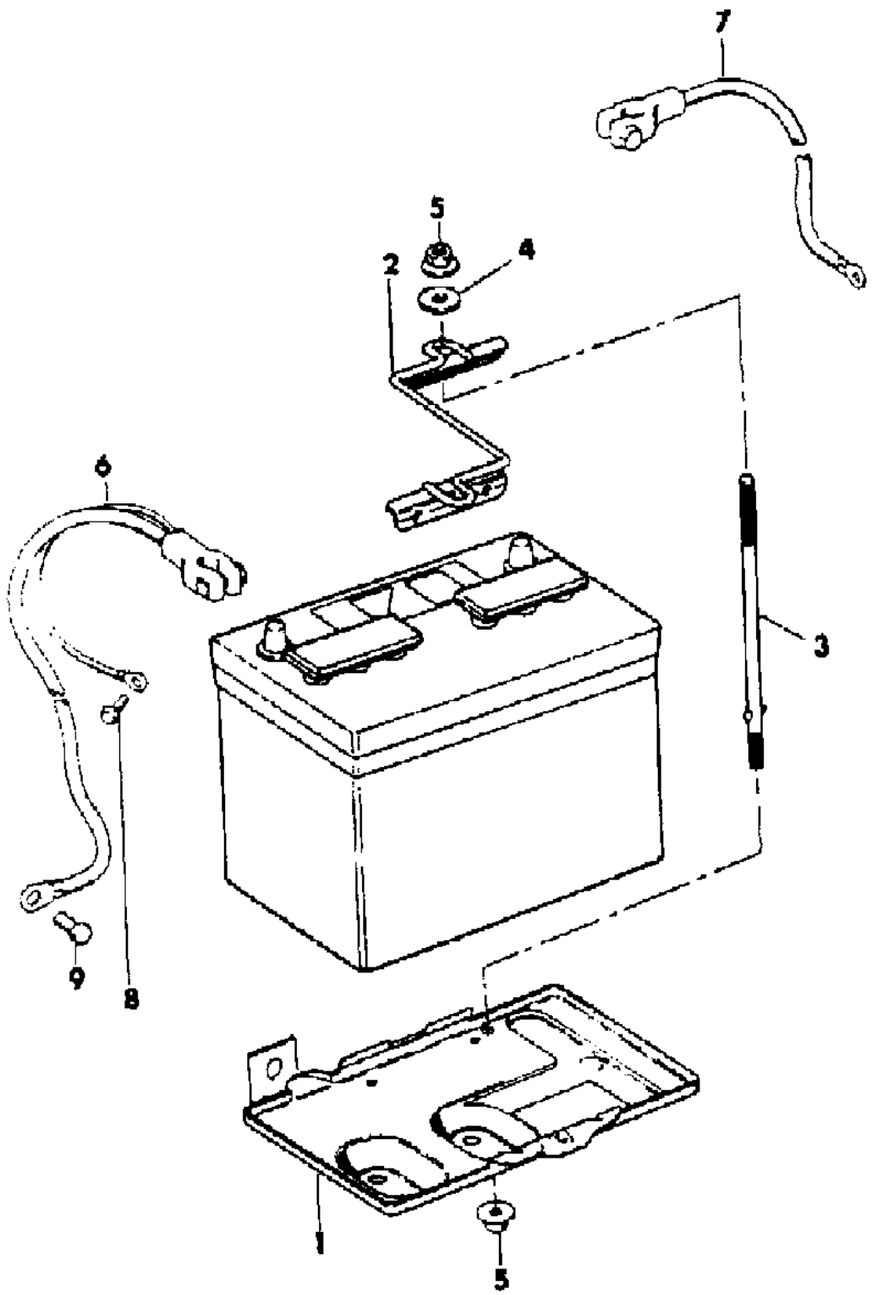

ITEM	PART NUMBER	QTY	BODY	MODEL	DESCRIPTION
1	J805 0766	1			TRAY, Battery
2	J805 0783	1			CLAMP
3	J805 0755	2			ROD
4	J400 1078	2			WASHER
5	J400 3587	4			NUT
6	J546 5067	1			CABLE, Negative
7	J535 0457	1			CABLE, Positive
8	J400 4801	1			BOLT
9	J018 0120	1			BOLT

MODEL CODES

16=Cherokee 2 Dr.(1981-83)
17=Cherokee 2 Dr.(1981-83)
73=Cherokee 2WD-2 Dr.(1984-86)
74=Cherokee 2WD-4 Dr.(1984-86)
18=Cherokee 4 Dr.(1981-83)
77=Cherokee 4WD-2 Dr.(1984-86)
78=Cherokee 4WD-4 Dr.(1984-86)
85=CJ-5 (1981-83)
86=CJ-6(1981)
87=CJ-7(1981-86)
88=CJ-8, Scrambler(1981-86)
64=Comanche 2WD-6 Ft. Box(1986)
66=Comanche 2WD-7 Ft. Box(1986)
63=Comanche 4WD-6 Ft. Box(1986)
65=Comanche 4WD-7 Ft. Box(1986)
15=Grand Wagoneer 4 Dr.(1984-86)
25=J-10 Truck 7 Ft. Box(1981-84)
26=J10 Truck 8 Ft. Box(1981-86)
27=J-20 Truck 8 Ft. Box(1981-86)
15=Wagoneer 4 Dr.(1981-83)
75=Wagoneer 4WD-4 Dr.(1984-86)

BODY
CJ=CJ-5, CJ-6, CJ-7, CJ-8, Scrambler(1981-86)
MJ=Comanche Pickup(1986)

STYLES
SJ=Wagoneer(1981-83), Grand Wagoneer(1984-86), Cherokee(1981-83), J-10, J-20(1981-86)
XJ=Wagoneer(1984-86), Cherokee(1984-86)

AR = Use as Required - = Non Illustrated Part P.A.R. = Paint as Required

« RETURN TO GROUP INDEX

DISTRIBUTOR 1981 GM FOUR CYLINDER CJ-5,6,7,8, SCRAMBLER
Figure 8-1800

81J08 1800

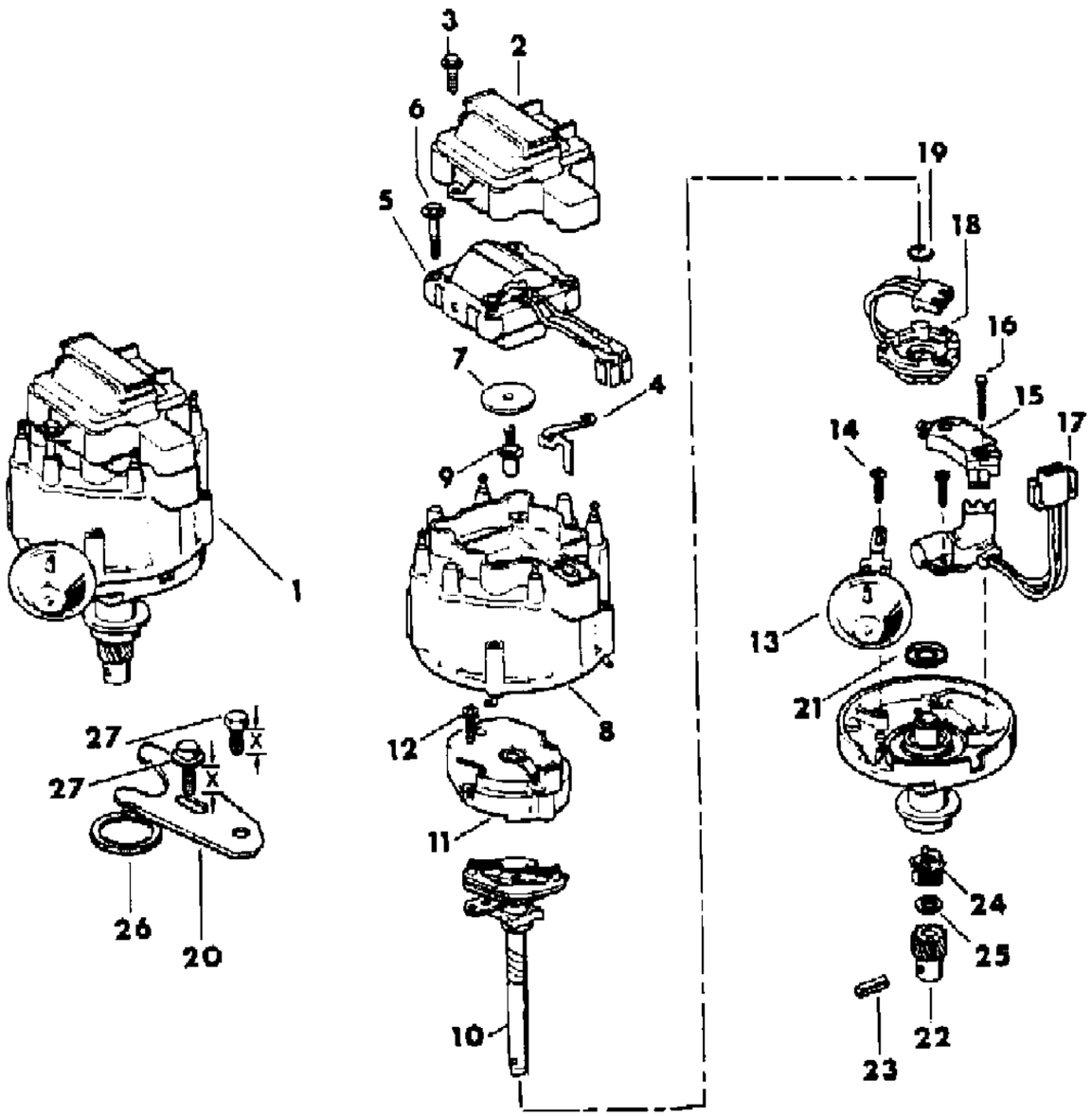

ITEM	PART NUMBER	QTY	BODY	MODEL	DESCRIPTION
1					DISTRIBUTOR ASSEMBLY ***
	J813 0961	1			Tagged 1110560
	J813 0962	1			Tagged 1110561
	J813 3516	1			Tagged 1111393
2	J813 1934	1			COVER
3	J813 1946	1			SCREW
4	J813 1944	1			STRAP
5	J813 1936	1			COIL, Ignition
6	J813 1947	4			SCREW
7	J813 1954	1			SEAL
8	J813 1935	1			CAP, Distributor
9	J813 1952	1			CONTACT
10					MAINSHAFT ***
	J813 2516	1			Tagged 1110560 or 1110561
					Tagged 1111393
11	J813 2514	1			ROTOR, Distributor
12	J813 1949	2			SCREW
13					CONTROL, Distributor Vacuum
	J813 1940	1			Tagged 1110560
	J813 2515	1			Tagged 1110561 or 1111393
14	J813 1950	2			SCREW
15	J813 1941	1			MODULE
16	J813 1948	2			SCREW
17	J813 1943	1			BLOCK, Terminal ***
18	J813 1942	1			PLATE, Distributor
19	J813 1953	1			RING, Snap
20	J813 2529	1			CLAMP
21	J813 1955	1			SEAL
22	J813 1945	1			GEAR
23	J813 2513	1			PIN
24	J813 1956	1			SPRING
25	J813 1951	1			WASHER
26	J813 0451	1			GASKET
27					BOLT
	1150 0198	1			22mm Length
	J813 2530	1			28mm Length

MODEL CODES

16=Cherokee 2 Dr.(1981-83)
17=Cherokee 2 Dr.(1981-83)
73=Cherokee 2WD-2 Dr.(1984-86)
74=Cherokee 2WD-4 Dr.(1984-86)
18=Cherokee 4 Dr.(1981-83)
77=Cherokee 4WD-2 Dr.(1984-86)
78=Cherokee 4WD-4 Dr.(1984-86)
85=CJ-5 (1981-83)
86=CJ-6(1981)
87=CJ-7(1981-86)
88=CJ-8, Scrambler(1981-86)
64=Comanche 2WD-6 Ft. Box(1986)
66=Comanche 2WD-7 Ft. Box(1986)
63=Comanche 4WD-6 Ft. Box(1986)
65=Comanche 4WD-7 Ft. Box(1986)
15=Grand Wagoneer 4 Dr.(1984-86)
25=J-10 Truck 7 Ft. Box(1981-84)
26=J10 Truck 8 Ft. Box(1981-86)
27=J-20 Truck 8 Ft. Box(1981-86)
15=Wagoneer 4 Dr.(1981-83)
75=Wagoneer 4WD-4 Dr.(1984-86)

BODY
CJ=CJ-5, CJ-6, CJ-7, CJ-8, Scrambler(1981-86)
MJ=Comanche Pickup(1986)

STYLES
SJ=Wagoneer(1981-83), Grand Wagoneer(1984-86), Cherokee(1981-83), J-10, J-20(1981-86)
XJ=Wagoneer(1984-86), Cherokee(1984-86)

AR = Use as Required - = Non Illustrated Part P.A.R. = Paint as Required

« RETURN TO GROUP INDEX

DISTRIBUTOR 1982-83 GM FOUR CYLINDER CJ-5,6,7,8, SCRAMBLER
Figure 8-1900

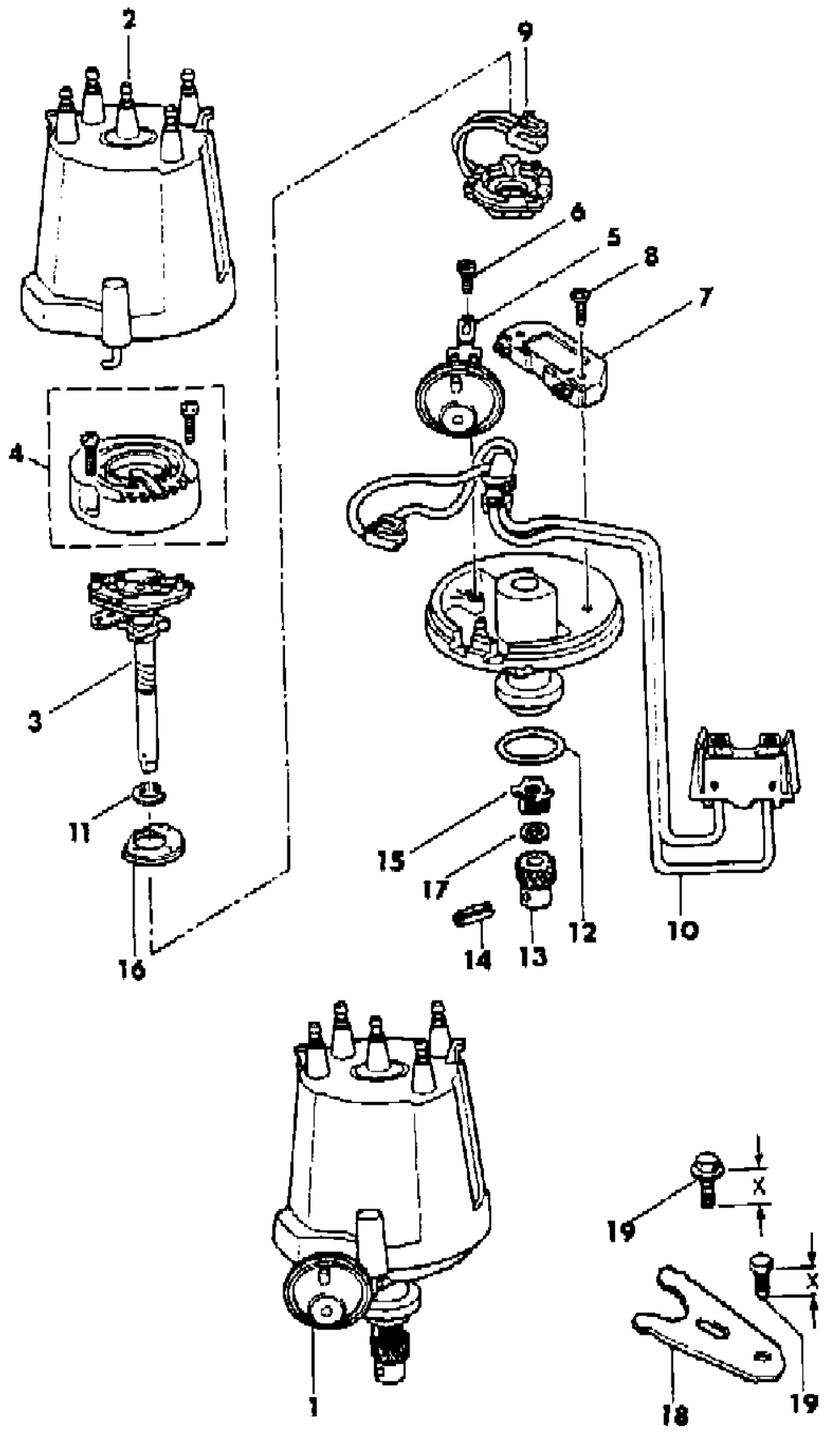

ITEM	PART NUMBER	QTY	BODY	MODEL	DESCRIPTION
1					DISTRIBUTOR ASSEMBLY ***
	J813 4799	1			Tagged 1103527
	J813 4001	1			Tagged 1110598
2	J813 4006	1			CAP, Distributor
3	J813 4195	1			MAINSHAFT ***
4	J813 4113	1			ROTOR, Distributor
5					CONTROL, Distributor Vacuum
	J813 4798	1			Tagged 1103527
	J813 4116	1			Tagged 1110598
6	J813 4205	2			SCREW
7	J813 4117	1			MODULE
8	J813 4203	2			SCREW
9	J813 4118	1			BLOCK, Terminal ***
10	J813 4119	1			PLATE ASSEMBLY, Distributor ***
11	J813 4204	1			RING, Snap
12	J813 4206	1			SEAL
13	J813 4207	1			GEAR
14	J813 2513	1			PIN
15	J813 4209	1			SPRING
16	J813 4208	1			WASHER
17	J813 4202	1			SEAL
18	J813 4405	1			CLAMP
19	1150 4687	1			BOLT

MODEL CODES

16=Cherokee 2 Dr.(1981-83)
17=Cherokee 2 Dr.(1981-83)
73=Cherokee 2WD-2 Dr.(1984-86)
74=Cherokee 2WD-4 Dr.(1984-86)
18=Cherokee 4 Dr.(1981-83)
77=Cherokee 4WD-2 Dr.(1984-86)
78=Cherokee 4WD-4 Dr.(1984-86)
85=CJ-5 (1981-83)
86=CJ-6(1981)
87=CJ-7(1981-86)
88=CJ-8, Scrambler(1981-86)
64=Comanche 2WD-6 Ft. Box(1986)
66=Comanche 2WD-7 Ft. Box(1986)
63=Comanche 4WD-6 Ft. Box(1986)
65=Comanche 4WD-7 Ft. Box(1986)
15=Grand Wagoneer 4 Dr.(1984-86)
25=J-10 Truck 7 Ft. Box(1981-84)
26=J10 Truck 8 Ft. Box(1981-86)
27=J-20 Truck 8 Ft. Box(1981-86)
15=Wagoneer 4 Dr.(1981-83)
75=Wagoneer 4WD-4 Dr.(1984-86)

BODY
CJ=CJ-5, CJ-6, CJ-7, CJ-8, Scrambler(1981-86)
MJ=Comanche Pickup(1986)

STYLES
SJ=Wagoneer(1981-83), Grand Wagoneer(1984-86), Cherokee(1981-83), J-10, J-20(1981-86)
XJ=Wagoneer(1984-86), Cherokee(1984-86)

AR = Use as Required - = Non Illustrated Part P.A.R. = Paint as Required

« RETURN TO GROUP INDEX

DISTRIBUTOR 2.5L AMC FOUR CYLINDER--CARBURETED 1983-86
Figure 8-2000

81J08 2000

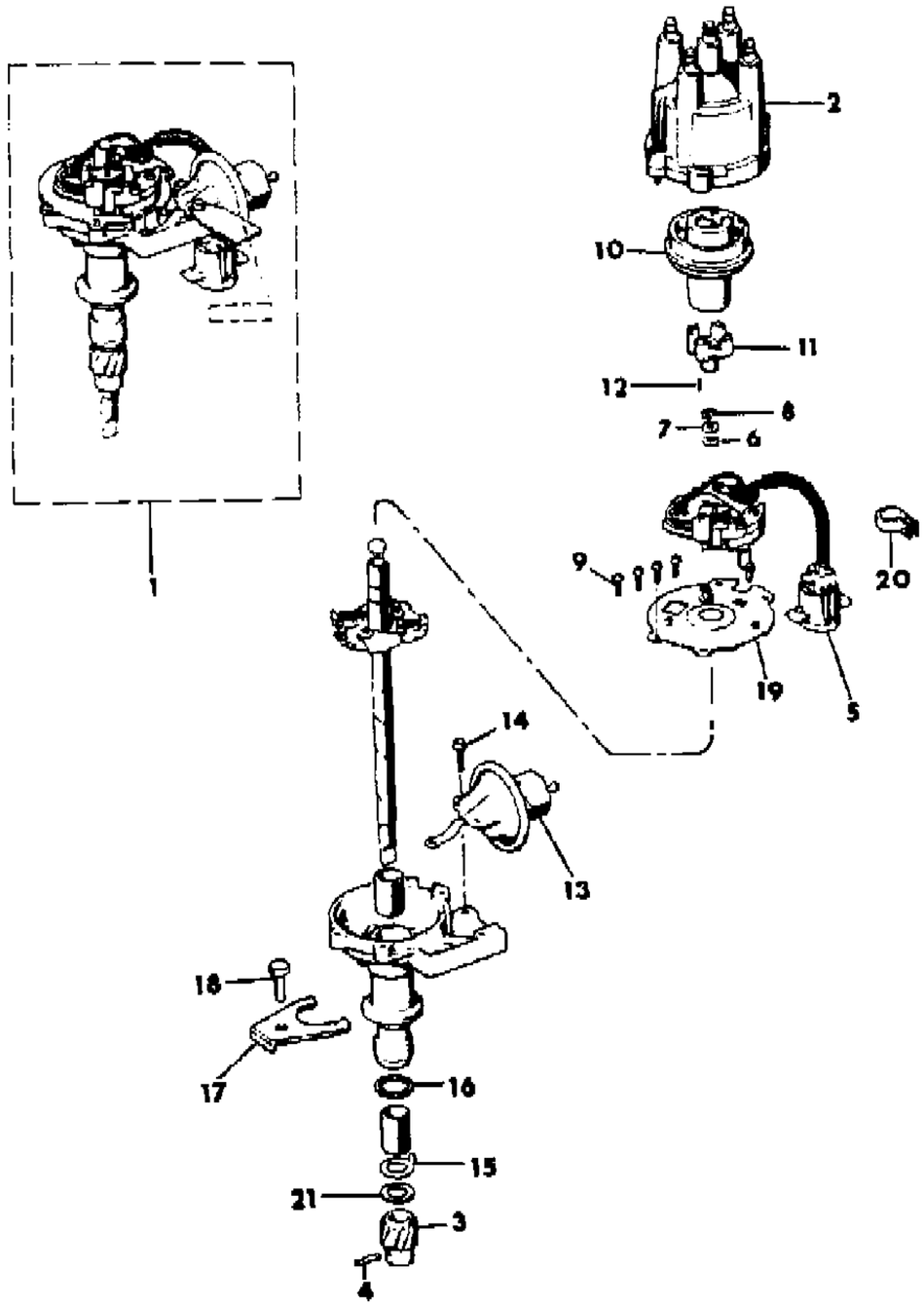

ITEM	PART NUMBER	QTY	BODY	MODEL	DESCRIPTION
1					DISTRIBUTOR ASSEMBLY ***
	J324 2700	1			Tagged 3242700
	J324 3066	1			Tagged 3243066
2	J323 4451	1			CAP, Distributor
3	J813 3652	1			GEAR, Distributor
4	J812 8462	1			PIN
5	8350 0409	1			SENSOR, Distributor
6	J812 8468	1			WASHER
7	J812 8469	1			WASHER
8	J812 8464	1			RETAINER
9	J812 8470	4			SCREW
10	J323 4452	1			ROTOR, Distributor
11	8350 0412	1			RELUCTOR, Distributor
12	J812 8463	1			PIN
13					CONTROL, Distributor Vacuum
	8350 0413	1			Tagged 3242700
	J813 2802	1			Tagged 3243066
14	J812 8460	2			BOLT
15	J812 8465	1			WASHER
16	J318 1288	1			GASKET
17	3300 4242	1			CLAMP
18	J018 0079	1			BOLT
19	8350 0410	1			PLATE
20	J400 1718	1			CLIP
21	J323 1413	AR			SHIM

MODEL CODES

16=Cherokee 2 Dr.(1981-83)
17=Cherokee 2 Dr.(1981-83)
73=Cherokee 2WD-2 Dr.(1984-86)
74=Cherokee 2WD-4 Dr.(1984-86)
18=Cherokee 4 Dr.(1981-83)
77=Cherokee 4WD-2 Dr.(1984-86)
78=Cherokee 4WD-4 Dr.(1984-86)
85=CJ-5 (1981-83)
86=CJ-6(1981)
87=CJ-7(1981-86)
88=CJ-8, Scrambler(1981-86)
64=Comanche 2WD-6 Ft. Box(1986)
66=Comanche 2WD-7 Ft. Box(1986)
63=Comanche 4WD-6 Ft. Box(1986)
65=Comanche 4WD-7 Ft. Box(1986)
15=Grand Wagoneer 4 Dr.(1984-86)
25=J-10 Truck 7 Ft. Box(1981-84)
26=J10 Truck 8 Ft. Box(1981-86)
27=J-20 Truck 8 Ft. Box(1981-86)
15=Wagoneer 4 Dr.(1981-83)
75=Wagoneer 4WD-4 Dr.(1984-86)

BODY
CJ=CJ-5, CJ-6, CJ-7, CJ-8, Scrambler(1981-86)
MJ=Comanche Pickup(1986)

STYLES
SJ=Wagoneer(1981-83), Grand Wagoneer(1984-86), Cherokee(1981-83), J-10, J-20(1981-86)
XJ=Wagoneer(1984-86), Cherokee(1984-86)

AR = Use as Required - = Non Illustrated Part P.A.R. = Paint as Required

« RETURN TO GROUP INDEX

DISTRIBUTOR 2.5L AMC FOUR CYLINDER-INJECTED 1986
Figure 8-2100

81J08 2100

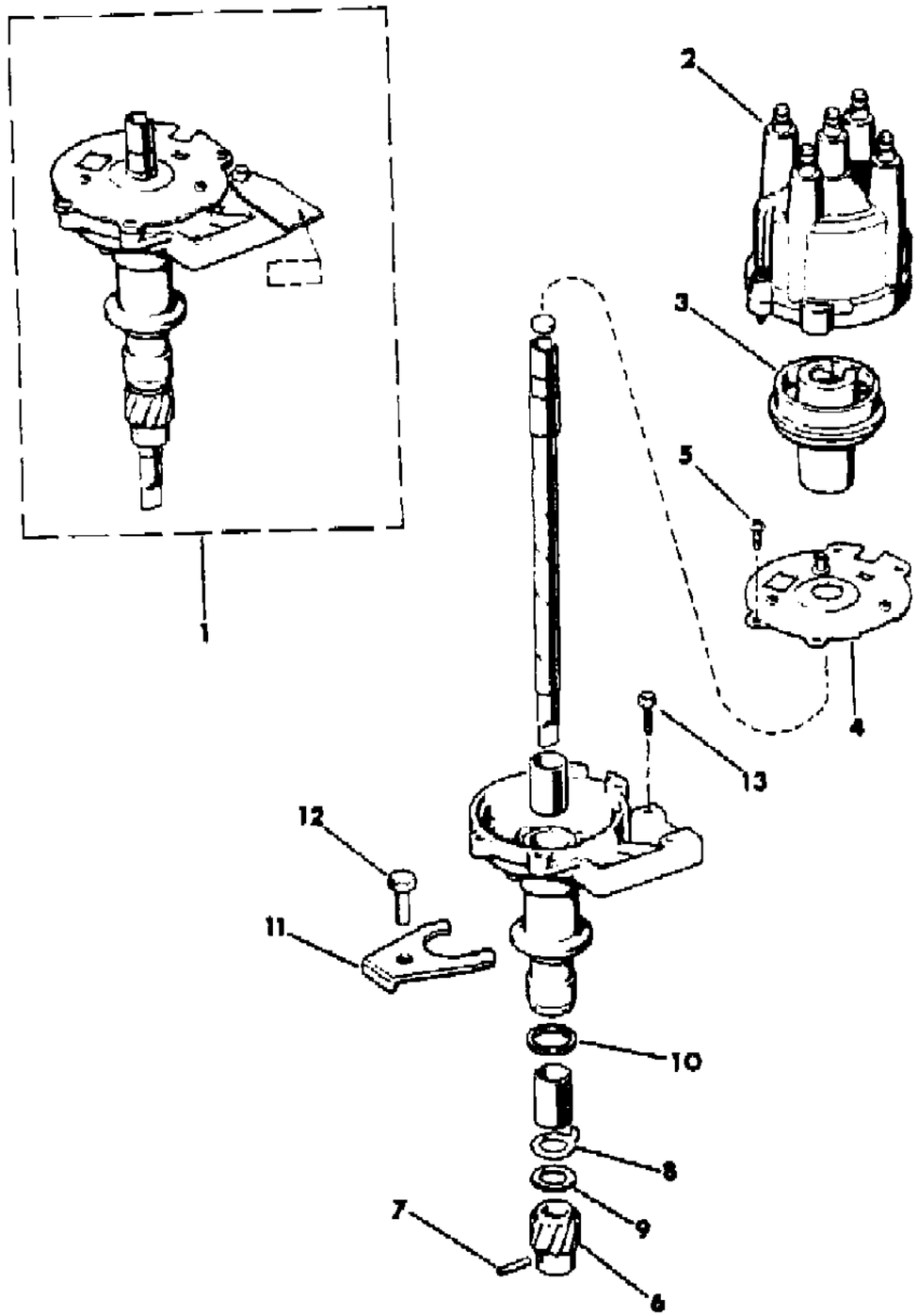

ITEM	PART NUMBER	QTY	BODY	MODEL	DESCRIPTION
1	5300 2107	1			DISTRIBUTOR
2	J323 4451	1			CAP, Distributor
3	J323 4452	1			ROTOR, Distributor
4	8350 0410	1			PLATE, Distributor
5	J812 8470	2			SCREW
6	J813 3652	1			GEAR, Distributor
7	J812 8462	1			PIN
8	J812 8465	1			WASHER
9	J323 1413	AR			SHIM
10	J318 1288	1			GASKET
11	3300 4242	1			CLAMP, Distributor
12	J018 0079	1			BOLT
13	J812 8460	1			BOLT

MODEL CODES
16=Cherokee 2 Dr.(1981-83)
17=Cherokee 2 Dr.(1981-83)
73=Cherokee 2WD-2 Dr.(1984-86)
74=Cherokee 2WD-4 Dr.(1984-86)
18=Cherokee 4 Dr.(1981-83)
77=Cherokee 4WD-2 Dr.(1984-86)
78=Cherokee 4WD-4 Dr.(1984-86)
85=CJ-5 (1981-83)
86=CJ-6(1981)
87=CJ-7(1981-86)
88=CJ-8, Scrambler(1981-86)
64=Comanche 2WD-6 Ft. Box(1986)
66=Comanche 2WD-7 Ft. Box(1986)
63=Comanche 4WD-6 Ft. Box(1986)
65=Comanche 4WD-7 Ft. Box(1986)
15=Grand Wagoneer 4 Dr.(1984-86)
25=J-10 Truck 7 Ft. Box(1981-84)
26=J10 Truck 8 Ft. Box(1981-86)
27=J-20 Truck 8 Ft. Box(1981-86)
15=Wagoneer 4 Dr.(1981-83)
75=Wagoneer 4WD-4 Dr.(1984-86)

BODY
CJ=CJ-5, CJ-6, CJ-7, CJ-8, Scrambler(1981-86)
MJ=Comanche Pickup(1986)

STYLES
SJ=Wagoneer(1981-83), Grand Wagoneer(1984-86), Cherokee(1981-83), J-10, J-20(1981-86)
XJ=Wagoneer(1984-86), Cherokee(1984-86)

AR = Use as Required - = Non Illustrated Part P.A.R. = Paint as Required

« RETURN TO GROUP INDEX

DISTRIBUTOR 2.8L SIX CYLINDER XJ CHEROKEE, XJ WAGONEER, COMANCHE
Figure 8-2200

81J08 2200

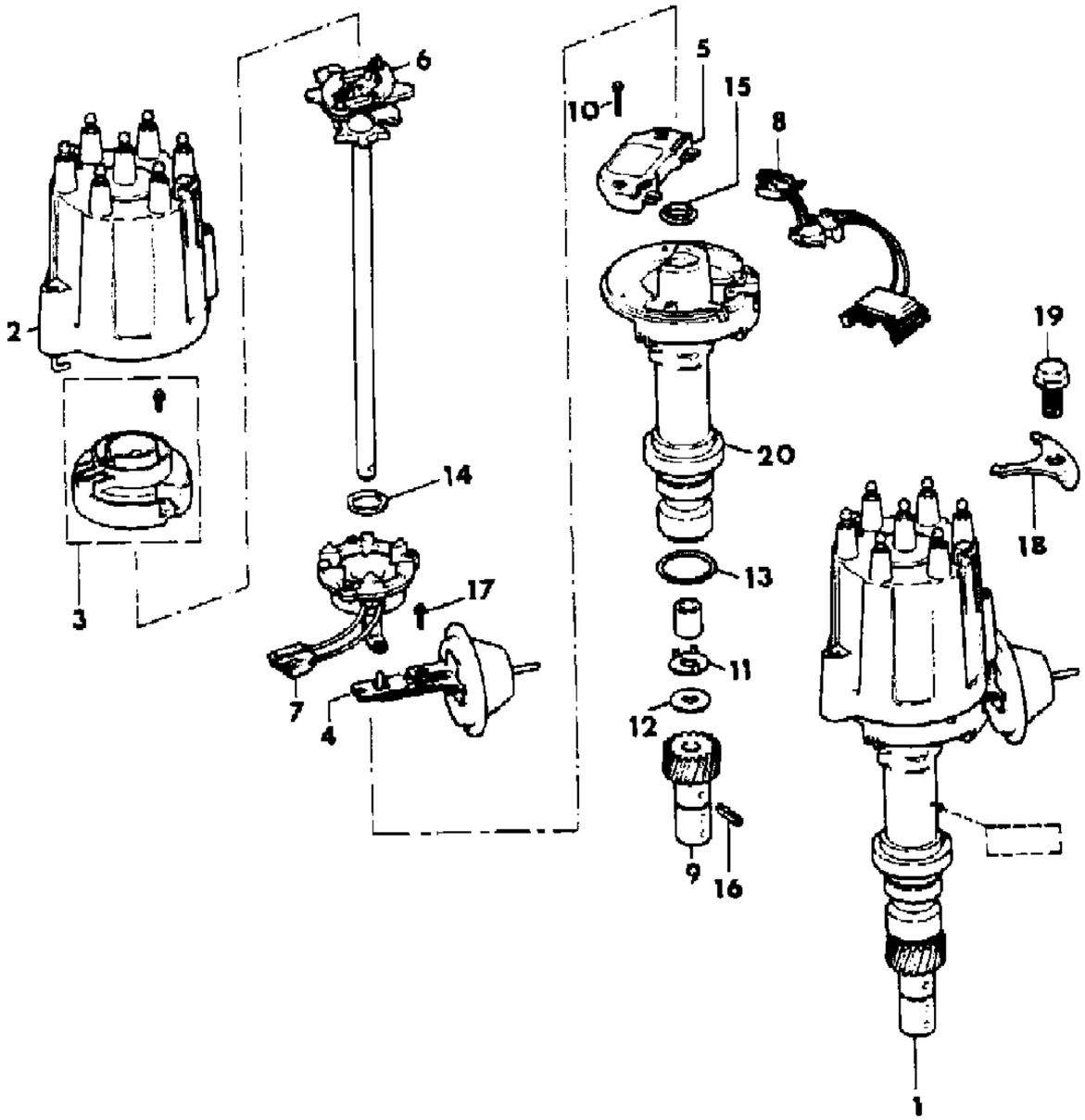

ITEM	PART NUMBER	QTY	BODY	MODEL	DESCRIPTION
1					DISTRIBUTOR ASSEMBLY ***
					Man. Trans.
					US-49 States
	8350 0947	1			1984: Tagged 1103520
	8350 1493	1			1985-86: Tagged 1103620
					US-Calif.
	8350 1078	1			1984: Tagged 1103570
	8350 1870	1			1985-86: Tagged 1103644
					Auto. Trans.
					US-49 States
	8350 0948	1			1984: Tagged 1103521
	8350 1494	1			1985-86: Tagged 1103621
					US-Calif.
	8350 0949	1			1984: Tagged 1103519
	8350 1870	1			1985-86: Tagged 1103644
2	8350 0934	1			CAP, Distributor
3	8350 1085	1			ROTOR, Distributor
4					CONTROL, Distributor Vacuum
	8350 1098	1			Tagged 1103520 or 1103620
	8350 1099	1			Tagged 1103521 or 1103621
5					MODULE, Distributor
	J813 4117	1			Tagged 1103520, 1103521, 1103620, 1103621
	8350 1087	1			Tagged 1103519, 1102570, 1103644
6					SHAFT, Distributor
	8350 1083	1			Tagged 1103520
	8350 1084	1			Tagged 1103521
	8350 1081	1			Tagged 1103519 or 1103644
	8350 1082	1			Tagged 1103570
	8350 1491	1			Tagged 1103620, 1103621
7					SENSOR, Distributor
	8350 1089	1			Tagged 1103520, 1103521, 1103620, 1103621
	8350 0935	1			Tagged 1103519, 1103570, 1103644
8					TERMINAL ASSEMBLY
	J813 4118	1			Tagged 1103520 or 1103521
	8350 1090	1			Tagged 1103519
	8350 1337	1			Tagged 1103570
	8350 1492	1			Tagged 1103620 or 1103621
	8350 1496	1			Tagged 1103644
9	8350 1092	1			GEAR, Distributor

MODEL CODES

16=Cherokee 2 Dr.(1981-83)	78=Cherokee 4WD-4 Dr.(1984-86)	64=Comanche 2WD-6 Ft. Box(1986)	25=J-10 Truck 7 Ft. Box(1981-84)
17=Cherokee 2 Dr.(1981-83)	85=CJ-5 (1981-83)	66=Comanche 2WD-7 Ft. Box(1986)	26=J10 Truck 8 Ft. Box(1981-86)
73=Cherokee 2WD-2 Dr.(1984-86)	86=CJ-6(1981)	63=Comanche 4WD-6 Ft. Box(1986)	27=J-20 Truck 8 Ft. Box(1981-86)
74=Cherokee 2WD-4 Dr.(1984-86)	87=CJ-7(1981-86)	65=Comanche 4WD-7 Ft. Box(1986)	15=Wagoneer 4 Dr.(1981-83)
18=Cherokee 4 Dr.(1981-83)	88=CJ-8, Scrambler(1981-86)	15=Grand Wagoneer 4 Dr.(1984-86)	75=Wagoneer 4WD-4 Dr.(1984-86)
77=Cherokee 4WD-2 Dr.(1984-86)			

BODY
CJ=CJ-5, CJ-6, CJ-7, CJ-8, Scrambler(1981-86)
MJ=Comanche Pickup(1986)

STYLES
SJ=Wagoneer(1981-83), Grand Wagoneer(1984-86), Cherokee(1981-83), J-10, J-20(1981-86)
XJ=Wagoneer(1984-86), Cherokee(1984-86)

AR = Use as Required - = Non Illustrated Part P.A.R. = Paint as Required

DISTRIBUTOR 2.8L SIX CYLINDER XJ CHEROKEE, XJ WAGONEER, COMANCHE
Figure 8-2200

81J08 2200

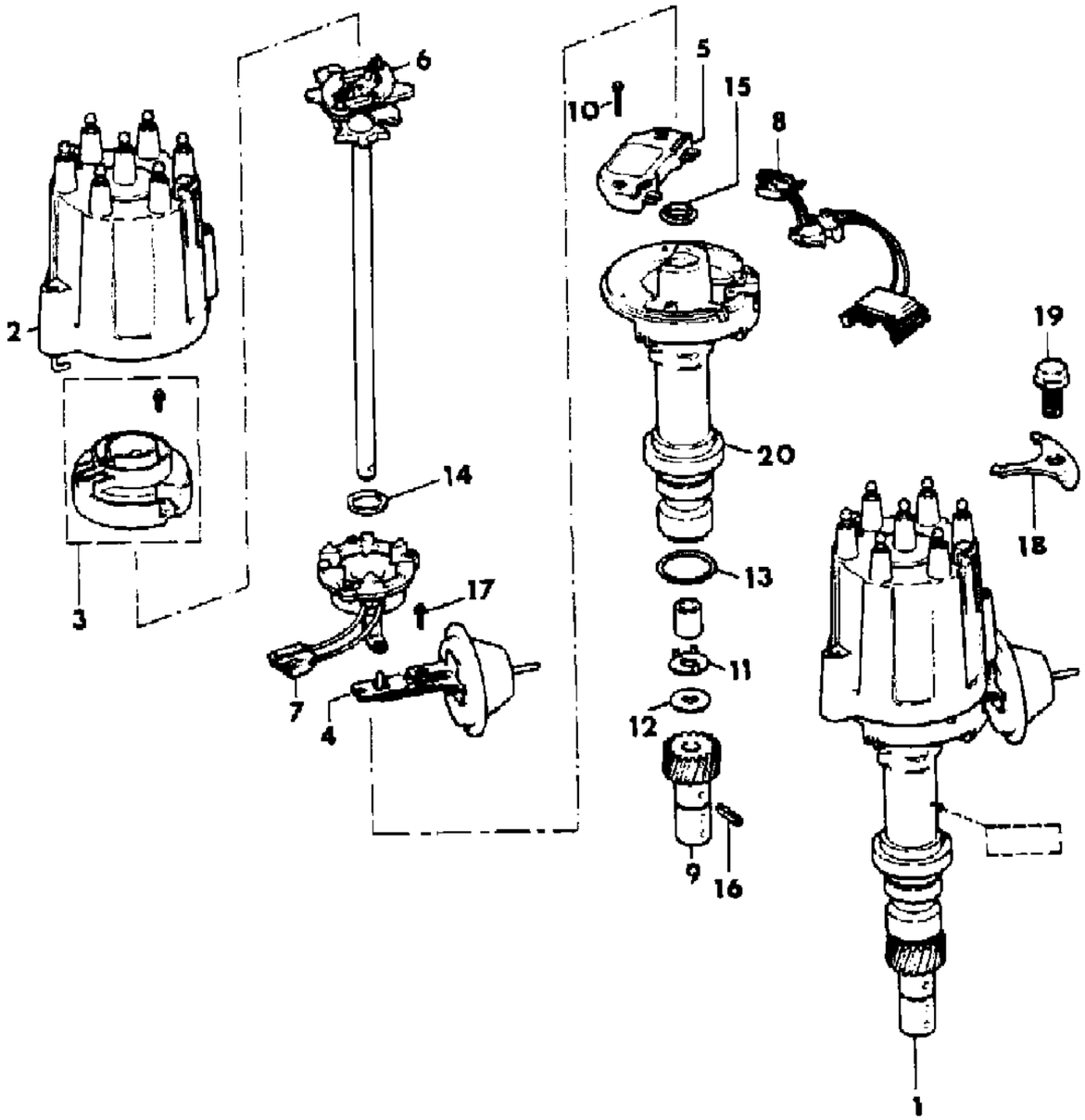

ITEM	PART NUMBER	QTY	BODY	MODEL	DESCRIPTION
10	J813 4203	2			SCREW
11	8350 1093	1			WASHER
12	8350 1094	1			WASHER
13	8350 1095	1			O-RING
14	J813 4204	1			RETAINER
15					SEAL
	J813 4202	1			Tagged 1103520, 1103521, 1103519, 1103620 or 1103621
	8350 1096	1			Tagged 1103570 or 1103644
16	8350 1097	1			PIN
17	J813 4205	2			SCREW
18	8350 0878	1			CLAMP, Distributor
19	8350 0879	1			SCREW
20					HOUSING, Distributor
	8350 1091	1			Tagged 1103570 or 1103644

MODEL CODES
16=Cherokee 2 Dr.(1981-83)
17=Cherokee 2 Dr.(1981-83)
73=Cherokee 2WD-2 Dr.(1984-86)
74=Cherokee 2WD-4 Dr.(1984-86)
18=Cherokee 4 Dr.(1981-83)
77=Cherokee 4WD-2 Dr.(1984-86)
78=Cherokee 4WD-4 Dr.(1984-86)
85=CJ-5 (1981-83)
86=CJ-6(1981)
87=CJ-7(1981-86)
88=CJ-8, Scrambler(1981-86)
64=Comanche 2WD-6 Ft. Box(1986)
66=Comanche 2WD-7 Ft. Box(1986)
63=Comanche 4WD-6 Ft. Box(1986)
65=Comanche 4WD-7 Ft. Box(1986)
15=Grand Wagoneer 4 Dr.(1984-86)
25=J-10 Truck 7 Ft. Box(1981-84)
26=J10 Truck 8 Ft. Box(1981-86)
27=J-20 Truck 8 Ft. Box(1981-86)
15=Wagoneer 4 Dr.(1981-83)
75=Wagoneer 4WD-4 Dr.(1984-86)

BODY
CJ=CJ-5, CJ-6, CJ-7, CJ-8, Scrambler(1981-86)
MJ=Comanche Pickup(1986)

STYLES
SJ=Wagoneer(1981-83), Grand Wagoneer(1984-86), Cherokee(1981-83), J-10, J-20(1981-86)
XJ=Wagoneer(1984-86), Cherokee(1984-86)

AR = Use as Required - = Non Illustrated Part P.A.R. = Paint as Required

« RETURN TO GROUP INDEX

DISTRIBUTOR 4.2L SIX CYLINDER
Figure 8-2300

81J08 2300

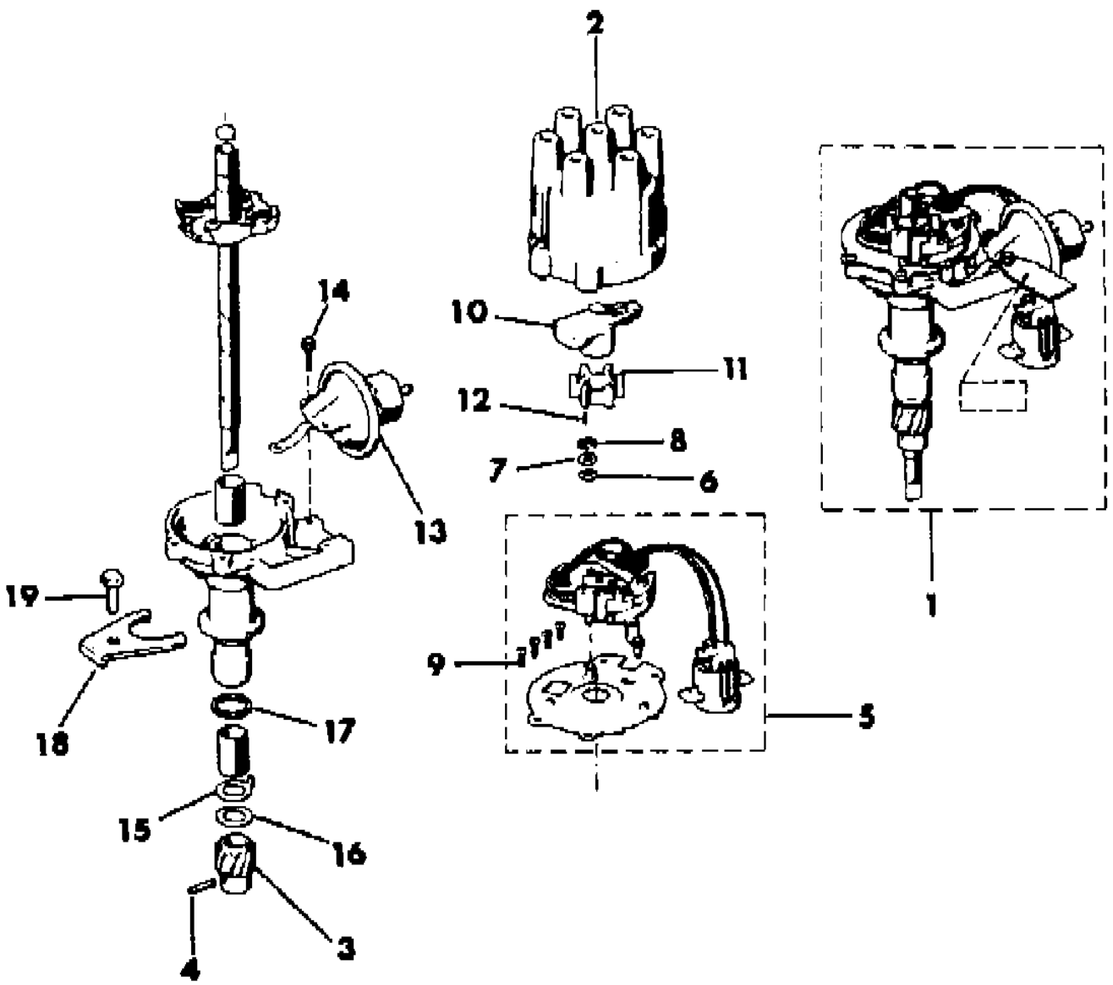

ITEM	PART NUMBER	QTY	BODY	MODEL	DESCRIPTION
1					DISTRIBUTOR
	J323 5141	1			Tagged 3235141
	J324 1333	1			Tagged 3241333
	J324 1334	1			Tagged 3241334
	J324 2409	1			Tagged 3242409
	J324 2410	1			Tagged 3242410
	3300 2353	1			Tagged 8933002353
	J805 1837	1			Tagged 8051837
2	J323 0457	1			CAP, Distributor
3	J323 1391	1			GEAR, Distributor
4	J812 8462	1			PIN
5	J812 8445	1			SENSOR, Distributor
6	J812 8468	1			WASHER
7	J812 8469	1			WASHER
8	J812 8464	1			RETAINER
9	J812 8470	2			SCREW
10	J323 0821	1			ROTOR, Distributor
11	J812 8422	1			RELUCTOR, Distributor
12	J812 8463	1			PIN
13					CONTROL, Distributor Vacuum
	J813 1968	1			Tagged 3235141
	J813 2802	1			Tagged 3241333
	J813 2802	1			Tagged 3241334
	J813 2802	1			Tagged 8051837
	J813 4678	1			Tagged 3242409
	J813 4678	1			Tagged 8933002353
	J813 4679	1			Tagged 3242410
14	J812 8460	2			BOLT
15	J812 8465	1			WASHER
16	J323 1413	AR			SHIM
17	J318 1288	1			GASKET
18	3300 4242	1			CLAMP, Distributor
19	J018 0079	1			BOLT

MODEL CODES

16=Cherokee 2 Dr.(1981-83)
17=Cherokee 2 Dr.(1981-83)
73=Cherokee 2WD-2 Dr.(1984-86)
74=Cherokee 2WD-4 Dr.(1984-86)
18=Cherokee 4 Dr.(1981-83)
77=Cherokee 4WD-2 Dr.(1984-86)
78=Cherokee 4WD-4 Dr.(1984-86)
85=CJ-5 (1981-83)
86=CJ-6(1981)
87=CJ-7(1981-86)
88=CJ-8, Scrambler(1981-86)
64=Comanche 2WD-6 Ft. Box(1986)
66=Comanche 2WD-7 Ft. Box(1986)
63=Comanche 4WD-6 Ft. Box(1986)
65=Comanche 4WD-7 Ft. Box(1986)
15=Grand Wagoneer 4 Dr.(1984-86)
25=J-10 Truck 7 Ft. Box(1981-84)
26=J10 Truck 8 Ft. Box(1981-86)
27=J-20 Truck 8 Ft. Box(1981-86)
15=Wagoneer 4 Dr.(1981-83)
75=Wagoneer 4WD-4 Dr.(1984-86)

BODY
CJ=CJ-5, CJ-6, CJ-7, CJ-8, Scrambler(1981-86)
MJ=Comanche Pickup(1986)

STYLES
SJ=Wagoneer(1981-83), Grand Wagoneer(1984-86), Cherokee(1981-83), J-10, J-20(1981-86)
XJ=Wagoneer(1984-86), Cherokee(1984-86)

AR = Use as Required - = Non Illustrated Part P.A.R. = Paint as Required

« RETURN TO GROUP INDEX

DISTRIBUTOR 5.9L EIGHT CYLINDER
Figure 8-2400

81J08 2400

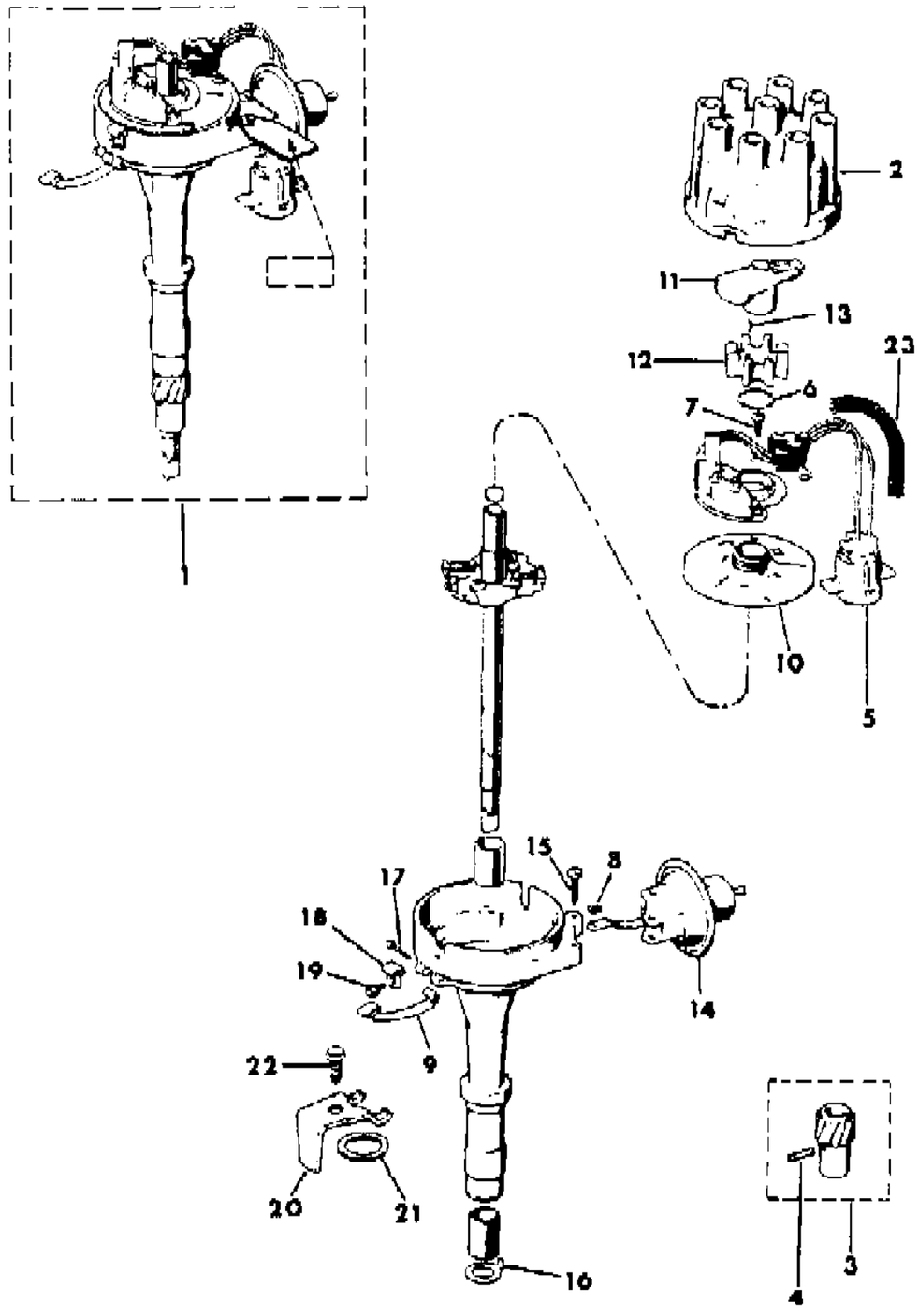

ITEM	PART NUMBER	QTY	BODY	MODEL	DESCRIPTION
1					DISTRIBUTOR ASSEMBLY ***
	J323 7198	1	CJ		Tagged 3237198
	J323 1340	1	CJ		Tagged 3231340
	J323 0443	1	SJ		Tagged 3230443
	J323 1341	1	SJ		Tagged 3231341
	J323 3174	1	SJ		Tagged 3233174
	J323 3579	1	SJ		Tagged 3233959
	J323 4693	1	SJ		Tagged 3234693
	J323 7199	1	SJ		Tagged 3237199
2	J323 0757	1			CAP, Distributor
3	J320 8615	1			GEAR, Distributor
4	J812 8462	1			PIN
5	J812 8900	1			SENSOR, Distributor
6	J812 8953	1			RETAINER
7	J812 8470	1			SCREW
8	J812 8959	1			CLIP
9	J812 8955	2			CLAMP
10	J812 8957	1			PLATE
11	J323 0765	1			ROTOR, Distributor
12	J812 8899	1			RELUCTOR, Distributor
13	J812 8463	1			PIN
14					CONTROL, Distributor Vacuum
	J813 1969	1	CJ		Tagged 3237198
	J812 8772	1	CJ		Tagged 3231340
	J812 8897	1	SJ		Tagged 3230443 or 3231341
	J812 9470	1	SJ		Tagged 3233174
	J813 0029	1	SJ		Tagged 3233959
	J812 8770	1	SJ		Tagged 3234693
	J813 1970	1	SJ		Tagged 3237199
15	J812 8958	2			SCREW
16	J812 8465	1			WASHER
17	J812 8956	1			RIVET
18	J812 8993	1			TAB ***
19	J812 9359	1			SCREW
20	J323 3813	1			CLAMP
21	J318 1288	1			GASKET
22	J018 0123	1			BOLT
23	J324 2850	1			SHIELD

MODEL CODES

16=Cherokee 2 Dr.(1981-83)
17=Cherokee 2 Dr.(1981-83)
73=Cherokee 2WD-2 Dr.(1984-86)
74=Cherokee 2WD-4 Dr.(1984-86)
18=Cherokee 4 Dr.(1981-83)
77=Cherokee 4WD-2 Dr.(1984-86)
78=Cherokee 4WD-4 Dr.(1984-86)
85=CJ-5 (1981-83)
86=CJ-6(1981)
87=CJ-7(1981-86)
88=CJ-8, Scrambler(1981-86)
64=Comanche 2WD-6 Ft. Box(1986)
66=Comanche 2WD-7 Ft. Box(1986)
63=Comanche 4WD-6 Ft. Box(1986)
65=Comanche 4WD-7 Ft. Box(1986)
15=Grand Wagoneer 4 Dr.(1984-86)
25=J-10 Truck 7 Ft. Box(1981-84)
26=J10 Truck 8 Ft. Box(1981-86)
27=J-20 Truck 8 Ft. Box(1981-86)
15=Wagoneer 4 Dr.(1981-83)
75=Wagoneer 4WD-4 Dr.(1984-86)

BODY
CJ=CJ-5, CJ-6, CJ-7, CJ-8, Scrambler(1981-86)
MJ=Comanche Pickup(1986)

STYLES
SJ=Wagoneer(1981-83), Grand Wagoneer(1984-86), Cherokee(1981-83), J-10, J-20(1981-86)
XJ=Wagoneer(1984-86), Cherokee(1984-86)

AR = Use as Required - = Non Illustrated Part P.A.R. = Paint as Required

« RETURN TO GROUP INDEX

STARTER AND MOUNTING GM FOUR CYLINDER CJ-5,6,7,8, SCRAMBLER
Figure 8-2500

81J08 2500

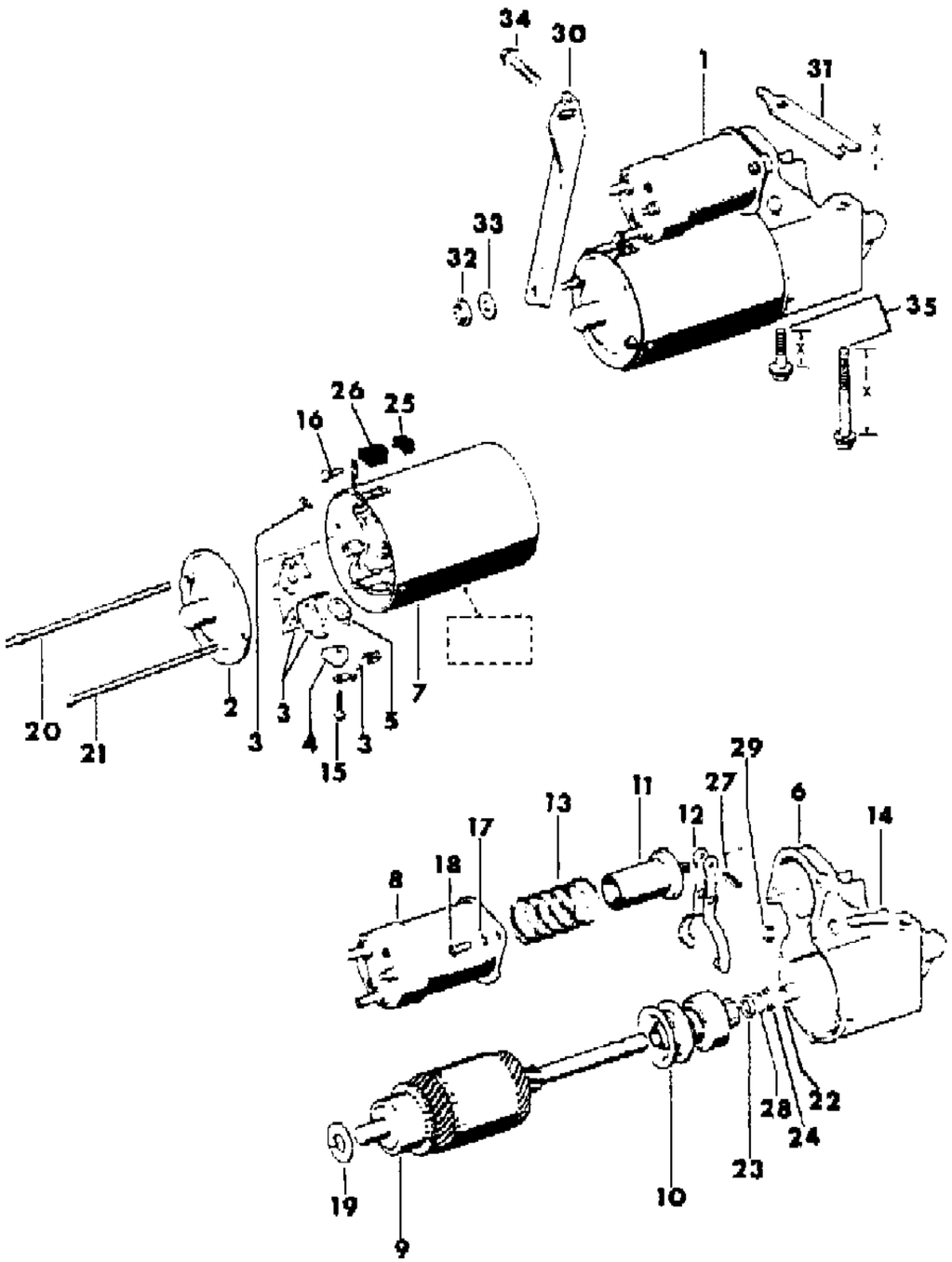

ITEM	PART NUMBER	QTY	BODY	MODEL	DESCRIPTION
1					MOTOR, Starter
					Remanufactured
	JR77 5002	1			1981: Tagged 1109527
	JR77 5000	1			1982-83: Tagged 1109534
					EXPORT
	J323 6659	1			1981: Tagged 1109527
	J813 4193	1			1982-83: Tagged 1109534
2					COVER, Starter
	J813 0932	1			1981
	J813 3922	1			1982-83
3	J813 0933	1			BRUSH AND HOLDER PACKAGE ***
4	J813 0934	4			BRUSH
5	J813 0935	4			HOLDER
6					HOUSING, Starter Drive
	J813 0936	1			1981
	J813 3923	1			1982-83
7					HOUSING, Starter Field
	J813 0937	1			1981
					1982-83
	J813 3924	1			Tagged 1109527
	J813 4196	1			Tagged 1109534
8					SOLENOID
	J813 0938	1			1981
	J813 3925	1			1982-83
9					ARMATURE, Starter
	J813 0939	1			1981
					1982-83
	J813 3926	1			Tagged 1109527
	J813 4198	1			Tagged 1109534
10	J813 0940	1			DRIVE ASSEMBLY ***
11					PLUNGER
	J813 0941	1			1981
	J813 3927	1			1982-83
12	J813 0942	1			LEVER
13					SPRING
	J813 0943	1			1981
	J813 3928	1			1982-83
14	J813 0944	1			PIN
15	J813 0946	4			SCREW

MODEL CODES

16=Cherokee 2 Dr.(1981-83)
17=Cherokee 2 Dr.(1981-83)
73=Cherokee 2WD-2 Dr.(1984-86)
74=Cherokee 2WD-4 Dr.(1984-86)
18=Cherokee 4 Dr.(1981-83)
77=Cherokee 4WD-2 Dr.(1984-86)
78=Cherokee 4WD-4 Dr.(1984-86)
85=CJ-5 (1981-83)
86=CJ-6(1981)
87=CJ-7(1981-86)
88=CJ-8, Scrambler(1981-86)
64=Comanche 2WD-6 Ft. Box(1986)
66=Comanche 2WD-7 Ft. Box(1986)
63=Comanche 4WD-6 Ft. Box(1986)
65=Comanche 4WD-7 Ft. Box(1986)
15=Grand Wagoneer 4 Dr.(1984-86)
25=J-10 Truck 7 Ft. Box(1981-84)
26=J10 Truck 8 Ft. Box(1981-86)
27=J-20 Truck 8 Ft. Box(1981-86)
15=Wagoneer 4 Dr.(1981-83)
75=Wagoneer 4WD-4 Dr.(1984-86)

BODY
CJ=CJ-5, CJ-6, CJ-7, CJ-8, Scrambler(1981-86)
MJ=Comanche Pickup(1986)

STYLES
SJ=Wagoneer(1981-83), Grand Wagoneer(1984-86), Cherokee(1981-83), J-10, J-20(1981-86)
XJ=Wagoneer(1984-86), Cherokee(1984-86)

AR = Use as Required - = Non Illustrated Part P.A.R. = Paint as Required

« RETURN TO GROUP INDEX »

STARTER AND MOUNTING GM FOUR CYLINDER CJ-5,6,7,8, SCRAMBLER
Figure 8-2500

81J08 2500

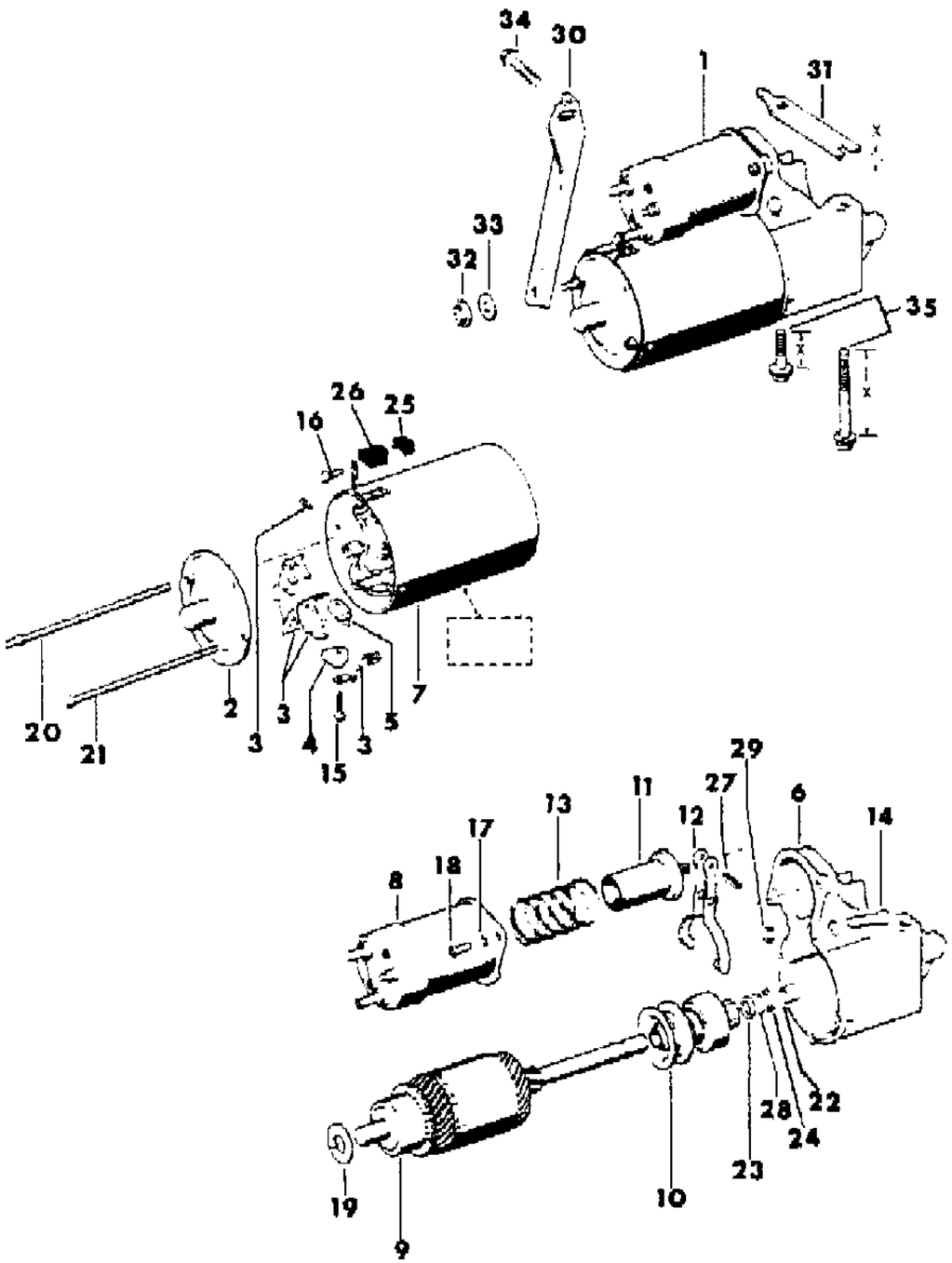

ITEM	PART NUMBER	QTY	BODY	MODEL	DESCRIPTION
16	J813 0947	1			SCREW
17	J012 0380	2			WASHER
18	S016 0515	2			SCREW
19	J813 0950	1			WASHER
20					BOLT
	J813 0951	1			1981
	J813 4199	1			1982-83
21					BOLT
	J813 0952	1			1981
	J813 3942	1			1982-83
22	J813 0953	1			BUSHING
23	J813 0954	1			COLLAR
24	J813 0955	1			COLLAR
25					GROMMET
	J813 0956	1			1981
	J813 3929	1			1982-83
26					GROMMET
	J813 0957	1			1981
	J813 3930	1			1982-83
27	J813 0958	1			PIN
28	J813 0959	1			RING, Snap
29					RING, Snap
	J813 0960	1			1981
	J813 3943	1			1982-83
30	J323 6737	1			BRACKET
31					SHIM
	J323 6735	AR			.015" Thick
	J323 6736	AR			.045" Thick
32	J400 3018	1			NUT
33	S941 7373	1			WASHER
34	1150 2693	1			BOLT
35					BOLT
	J400 6561	1			1.59" Length
	J420 0450	1			1.77" Length
	J400 6562	1			4.29" Length
	J420 0451	1			4.44" Length

MODEL CODES

16=Cherokee 2 Dr.(1981-83)
17=Cherokee 2 Dr.(1981-83)
73=Cherokee 2WD-2 Dr.(1984-86)
74=Cherokee 2WD-4 Dr.(1984-86)
18=Cherokee 4 Dr.(1981-83)
77=Cherokee 4WD-2 Dr.(1984-86)
78=Cherokee 4WD-4 Dr.(1984-86)
85=CJ-5 (1981-83)
86=CJ-6(1981)
87=CJ-7(1981-86)
88=CJ-8, Scrambler(1981-86)
64=Comanche 2WD-6 Ft. Box(1986)
66=Comanche 2WD-7 Ft. Box(1986)
63=Comanche 4WD-6 Ft. Box(1986)
65=Comanche 4WD-7 Ft. Box(1986)
15=Grand Wagoneer 4 Dr.(1984-86)
25=J-10 Truck 7 Ft. Box(1981-84)
26=J10 Truck 8 Ft. Box(1981-86)
27=J-20 Truck 8 Ft. Box(1981-86)
15=Wagoneer 4 Dr.(1981-83)
75=Wagoneer 4WD-4 Dr.(1984-86)

BODY
CJ=CJ-5, CJ-6, CJ-7, CJ-8, Scrambler(1981-86)
MJ=Comanche Pickup(1986)

STYLES
SJ=Wagoneer(1981-83), Grand Wagoneer(1984-86), Cherokee(1981-83), J-10, J-20(1981-86)
XJ=Wagoneer(1984-86), Cherokee(1984-86)

AR = Use as Required - = Non Illustrated Part P.A.R. = Paint as Required

STARTER AND MOUNTING 2.5L AMC FOUR CYLINDER-CARBURETED
Figure 8-2600

81J08 2600

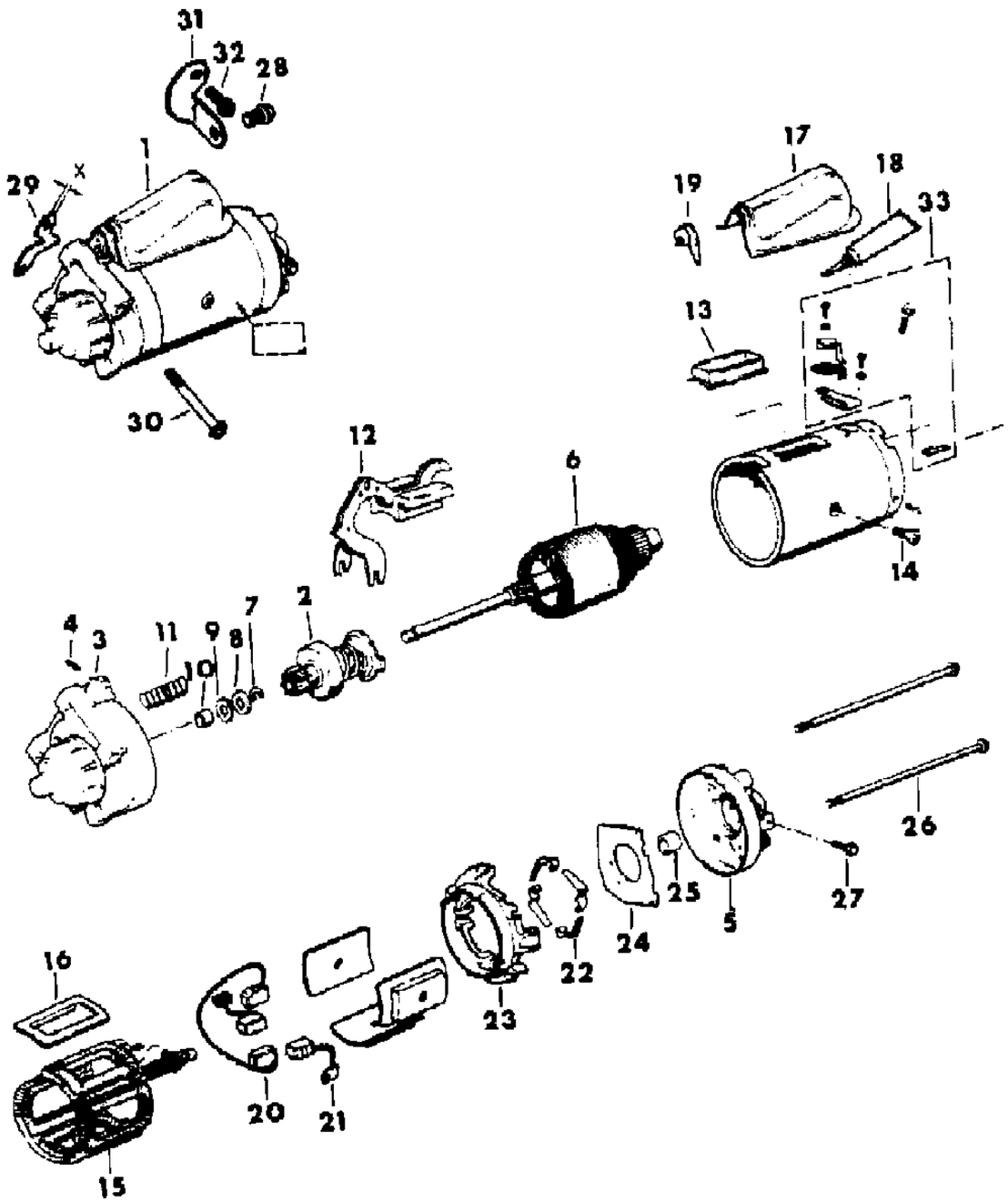

ITEM	PART NUMBER	QTY	BODY	MODEL	DESCRIPTION
1					MOTOR, Starting
	JR77 5012	1			Remanufactured
	J324 2283	1			EXPORT
2	8350 0399	1			DRIVE ASSEMBLY, Starter ***
3	8350 0398	1			HOUSING, Starter Drive
4	8350 0405	1			PIN
5	8350 0397	1			COVER, Starter Rear
6	8350 0396	1			ARMATURE, Starting Motor
7	J320 7418	1			RING
8	J320 7419	1			RETAINER
9	J812 8444	1			WASHER
10	J812 0030	1			BUSHING
11	J812 7991	1			SPRING
12	8350 0394	1			LEVER, Starter Drive
13	8350 0393	1			SLEEVE
14	J812 7992	3			SCREW
15	8350 0392	1			COIL, Starter Field
16	J812 7990	1			FLANGE ***
17	8350 0407	1			COVER, Drive Lever
18	J899 3317	1			GASKET-IN-A-TUBE ***
19	8350 0408	1			GROMMET
20	8350 0401	1			BRUSH, Starter Positive
21	8350 0402	1			BRUSH, Starter Negative
22	8350 0395	4			SPRING
23	8350 0403	1			HOLDER, Starter Brush
24	8350 0404	1			INSULATOR
25	J812 1196	1			BUSHING
26	8350 0400	2			BOLT
27	J400 5982	1			SCREW
28	3420 1391	1			BOLT
29					SHIM
	J324 1711	AR			.015"
	J324 1712	AR			.045"
30	J400 6964	2			BOLT
31	3300 0444	1			BRACKET, Starter
32	J941 9885	1			BOLT
33	8351 0190	1			POINT PACKAGE, Starter ***

MODEL CODES
16=Cherokee 2 Dr.(1981-83)
17=Cherokee 2 Dr.(1981-83)
73=Cherokee 2WD-2 Dr.(1984-86)
74=Cherokee 2WD-4 Dr.(1984-86)
18=Cherokee 4 Dr.(1981-83)
77=Cherokee 4WD-2 Dr.(1984-86)
78=Cherokee 4WD-4 Dr.(1984-86)
85=CJ-5 (1981-83)
86=CJ-6(1981)
87=CJ-7(1981-86)
88=CJ-8, Scrambler(1981-86)
64=Comanche 2WD-6 Ft. Box(1986)
66=Comanche 2WD-7 Ft. Box(1986)
63=Comanche 4WD-6 Ft. Box(1986)
65=Comanche 4WD-7 Ft. Box(1986)
15=Grand Wagoneer 4 Dr.(1984-86)
25=J-10 Truck 7 Ft. Box(1981-84)
26=J10 Truck 8 Ft. Box(1981-86)
27=J-20 Truck 8 Ft. Box(1981-86)
15=Wagoneer 4 Dr.(1981-83)
75=Wagoneer 4WD-4 Dr.(1984-86)

BODY
CJ=CJ-5, CJ-6, CJ-7, CJ-8, Scrambler(1981-86)
MJ=Comanche Pickup(1986)

STYLES
SJ=Wagoneer(1981-83), Grand Wagoneer(1984-86), Cherokee(1981-83), J-10, J-20(1981-86)
XJ=Wagoneer(1984-86), Cherokee(1984-86)

AR = Use as Required - = Non Illustrated Part P.A.R. = Paint as Required

« RETURN TO GROUP INDEX

STARTER AND MOUNTING 2.5L AMC FOUR CYLINDER-INJECTED
Figure 8-2700

81J08 2700

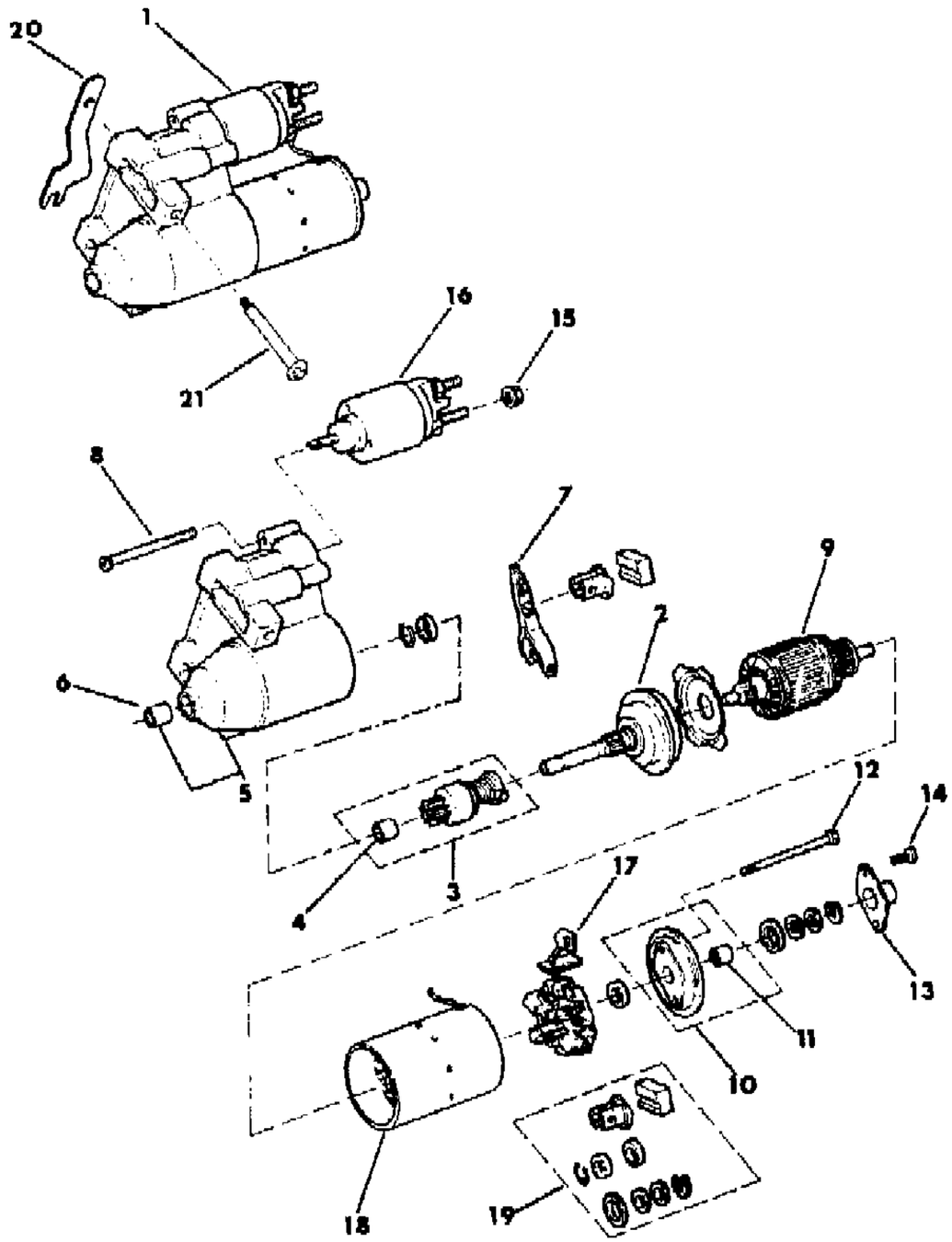

ITEM	PART NUMBER	QTY	BODY	MODEL	DESCRIPTION
1					MOTOR, Starting
	JR77 5132	1			Remanufactured
	8350 3480	1			EXPORT
2	8350 2493	1			GEAR ASSEMBLY, Reduction ***
3	8350 1498	1			DRIVE ASSEMBLY, Starter ***
4	8350 1499	2			BUSHING
5	8350 2494	1			HOUSING, Starter Drive
6	8350 1586	1			BUSHING
7	8350 1587	1			LEVER, Starter Drive
8	8350 2279	3			SCREW
9	8350 1588	1			ARMATURE, Starting Motor
10	8350 2495	1			COVER, Starter Rear
11	8350 1590	1			BUSHING
12	8350 2496	2			BOLT
13	8350 2214	1			COVER, Starter Rear
14	T300 7007	2			BOLT
15	8350 2497	1			NUT
16	8350 2614	1			SOLENOID, Starter Drive
17	8350 2615	1			HOLDER ASSEMBLY, Starting Motor Brush
18	8350 2217	1			HOUSING, Starter Field
19	8350 2218	1			HARDWARE PACKAGE
20					SHIM
	J324 1711	AR			.015"
	J324 1712	AR			.045"
21	J400 6964	2			BOLT

MODEL CODES

16=Cherokee 2 Dr.(1981-83)
17=Cherokee 2 Dr.(1981-83)
73=Cherokee 2WD-2 Dr.(1984-86)
74=Cherokee 2WD-4 Dr.(1984-86)
18=Cherokee 4 Dr.(1981-83)
77=Cherokee 4WD-2 Dr.(1984-86)
78=Cherokee 4WD-4 Dr.(1984-86)
85=CJ-5 (1981-83)
86=CJ-6(1981)
87=CJ-7(1981-86)
88=CJ-8, Scrambler(1981-86)
64=Comanche 2WD-6 Ft. Box(1986)
66=Comanche 2WD-7 Ft. Box(1986)
63=Comanche 4WD-6 Ft. Box(1986)
65=Comanche 4WD-7 Ft. Box(1986)
15=Grand Wagoneer 4 Dr.(1984-86)
25=J-10 Truck 7 Ft. Box(1981-84)
26=J10 Truck 8 Ft. Box(1981-86)
27=J-20 Truck 8 Ft. Box(1981-86)
15=Wagoneer 4 Dr.(1981-83)
75=Wagoneer 4WD-4 Dr.(1984-86)

BODY
CJ=CJ-5, CJ-6, CJ-7, CJ-8, Scrambler(1981-86)
MJ=Comanche Pickup(1986)

STYLES
SJ=Wagoneer(1981-83), Grand Wagoneer(1984-86), Cherokee(1981-83), J-10, J-20(1981-86)
XJ=Wagoneer(1984-86), Cherokee(1984-86)

AR = Use as Required - = Non Illustrated Part P.A.R. = Paint as Required

« RETURN TO GROUP INDEX

STARTER AND MOUNTING 2.8L SIX CYLINDER XJ CHEROKEE, XJ WAGONEER, COMANCHE
Figure 8-2800

81J08 2800

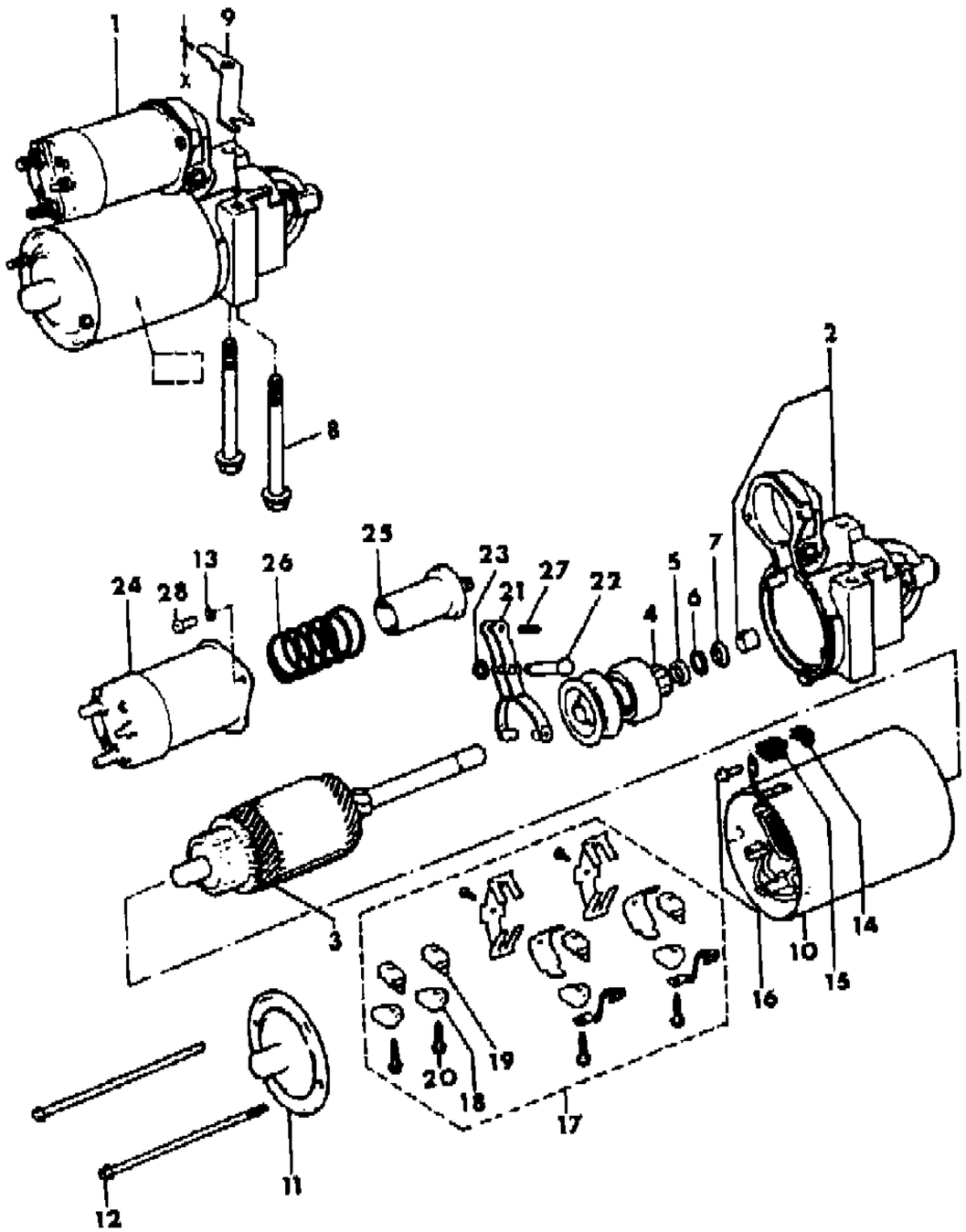

ITEM	PART NUMBER	QTY	BODY	MODEL	DESCRIPTION
1					MOTOR, Starting
	JR77 5013	1			Remanufactured
	5300 2124	1			EXPORT
2					HOUSING, Starter Drive
	8350 0939	1			Tagged 1109535
	8350 1385	1			Tagged 1998427, 1998524
3					ARMATURE, Starting Motor
	J813 4198	1			Tagged 1109535
	8350 1382	1			Tagged 1998427, 1998524
4					DRIVE ASSEMBLY, Starter ***
	J813 0940	1			Tagged 1109535
	8350 1388	1			Tagged 1998427, 1998524
5	J813 0954	1			COLLAR
	J813 0959	1			RING
7	J813 0955	1			COLLAR
8	3420 1592	2			BOLT
9					SHIM
	5300 0762	AR			2mm
	5300 0763	AR			1mm
10					HOUSING, Starter Field
	J813 4196	1			Tagged 1109535
	8350 1383	1			Tagged 1998427, 1998524
11	J813 3922	1			COVER, Starter Rear
12					BOLT
	J813 3942	2			Tagged 1109535
	8350 1387	2			BOLT
13	J400 4863	2			WASHER
14					GROMMET
	J813 3930	1			Tagged 1109535
	8350 1384	1			Tagged 1998427, 1998524
15	J813 3929	1			GROMMET
16	J813 0947	1			SCREW
17	J813 0933	1			BRUSH PACKAGE ***
18	J813 0934	4			BRUSH
19	J813 0935	4			HOLDER, Brush
20	J813 0946	4			SCREW
21					LEVER, Starter Drive
	J813 0942	1			Tagged 1109535
	8350 1386	1			Tagged 1998427, 1998524

MODEL CODES

16=Cherokee 2 Dr.(1981-83)
17=Cherokee 2 Dr.(1981-83)
73=Cherokee 2WD-2 Dr.(1984-86)
74=Cherokee 2WD-4 Dr.(1984-86)
18=Cherokee 4 Dr.(1981-83)
77=Cherokee 4WD-2 Dr.(1984-86)
78=Cherokee 4WD-4 Dr.(1984-86)
85=CJ-5 (1981-83)
86=CJ-6(1981)
87=CJ-7(1981-86)
88=CJ-8, Scrambler(1981-86)
64=Comanche 2WD-6 Ft. Box(1986)
66=Comanche 2WD-7 Ft. Box(1986)
63=Comanche 4WD-6 Ft. Box(1986)
65=Comanche 4WD-7 Ft. Box(1986)
15=Grand Wagoneer 4 Dr.(1984-86)
25=J-10 Truck 7 Ft. Box(1981-84)
26=J10 Truck 8 Ft. Box(1981-86)
27=J-20 Truck 8 Ft. Box(1981-86)
15=Wagoneer 4 Dr.(1981-83)
75=Wagoneer 4WD-4 Dr.(1984-86)

BODY
CJ=CJ-5, CJ-6, CJ-7, CJ-8, Scrambler(1981-86)
MJ=Comanche Pickup(1986)

STYLES
SJ=Wagoneer(1981-83), Grand Wagoneer(1984-86), Cherokee(1981-83), J-10, J-20(1981-86)
XJ=Wagoneer(1984-86), Cherokee(1984-86)

AR = Use as Required - = Non Illustrated Part P.A.R. = Paint as Required

« RETURN TO GROUP INDEX »

81J08 2800

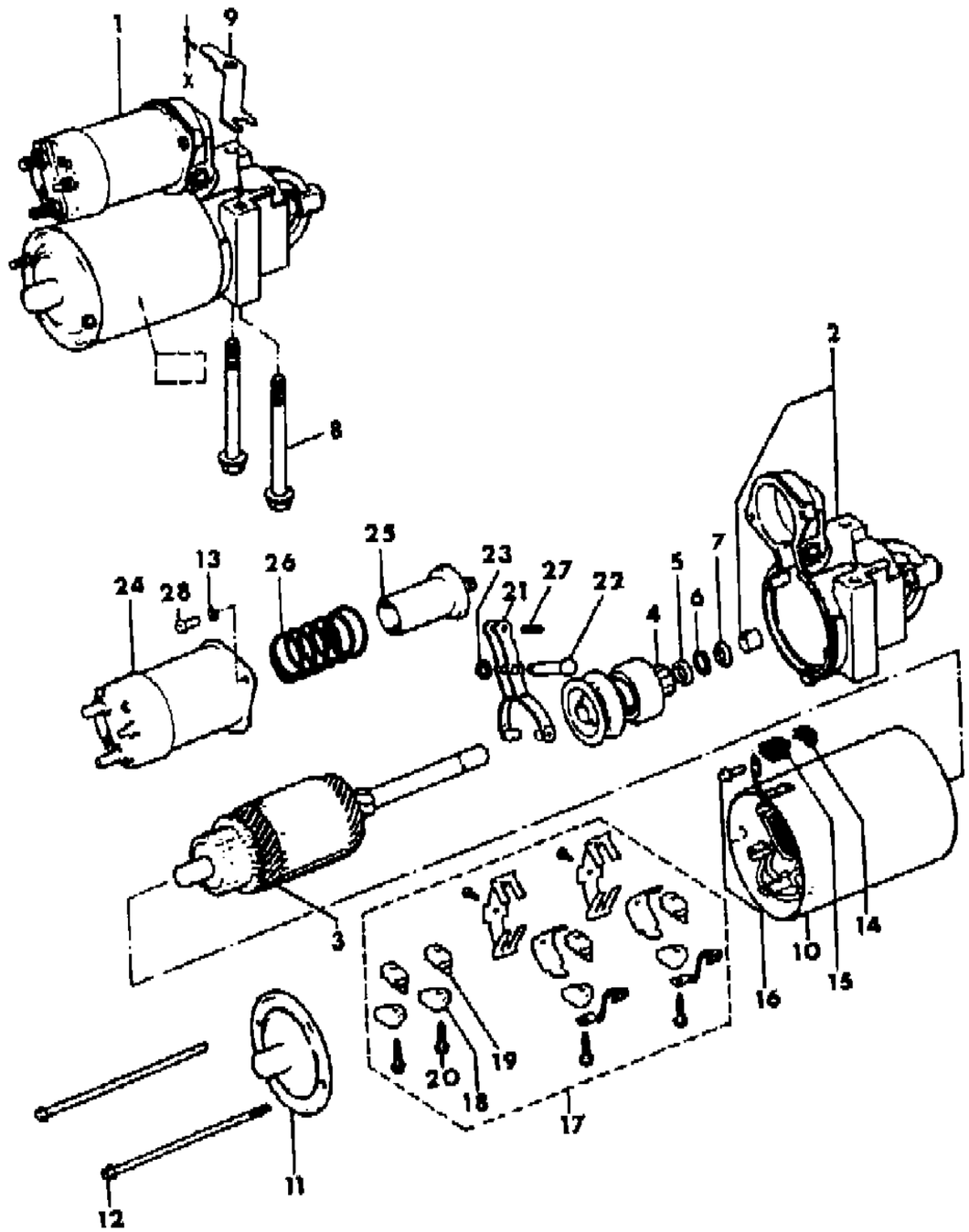

ITEM	PART NUMBER	QTY	BODY	MODEL	DESCRIPTION
22	J813 0944	1			PIN
23	J813 3943	1			RETAINER
24					SOLENOID, Starter Drive
	8350 0937	1			Tagged 1109535
	J813 3925	1			Tagged 1998427, 1998524
25	J813 3927	1			PLUNGER
26	J813 3928	1			SPRING
27	J813 0958	1			PIN
28	J018 0020	2			BOLT

MODEL CODES
16=Cherokee 2 Dr.(1981-83)
17=Cherokee 2 Dr.(1981-83)
73=Cherokee 2WD-2 Dr.(1984-86)
74=Cherokee 2WD-4 Dr.(1984-86)
18=Cherokee 4 Dr.(1981-83)
77=Cherokee 4WD-2 Dr.(1984-86)
78=Cherokee 4WD-4 Dr.(1984-86)
85=CJ-5 (1981-83)
86=CJ-6(1981)
87=CJ-7(1981-86)
88=CJ-8, Scrambler(1981-86)
64=Comanche 2WD-6 Ft. Box(1986)
66=Comanche 2WD-7 Ft. Box(1986)
63=Comanche 4WD-6 Ft. Box(1986)
65=Comanche 4WD-7 Ft. Box(1986)
15=Grand Wagoneer 4 Dr.(1984-86)
25=J-10 Truck 7 Ft. Box(1981-84)
26=J10 Truck 8 Ft. Box(1981-86)
27=J-20 Truck 8 Ft. Box(1981-86)
15=Wagoneer 4 Dr.(1981-83)
75=Wagoneer 4WD-4 Dr.(1984-86)

BODY
CJ=CJ-5, CJ-6, CJ-7, CJ-8, Scrambler(1981-86)
MJ=Comanche Pickup(1986)

STYLES
SJ=Wagoneer(1981-83), Grand Wagoneer(1984-86), Cherokee(1981-83), J-10, J-20(1981-86)
XJ=Wagoneer(1984-86), Cherokee(1984-86)

AR = Use as Required - = Non Illustrated Part P.A.R. = Paint as Required

STARTER AND MOUNTING 4.2L - SIX CYLINDER 5.9L - EIGHT CYLINDER
Figure 8-2900

81J08 2900

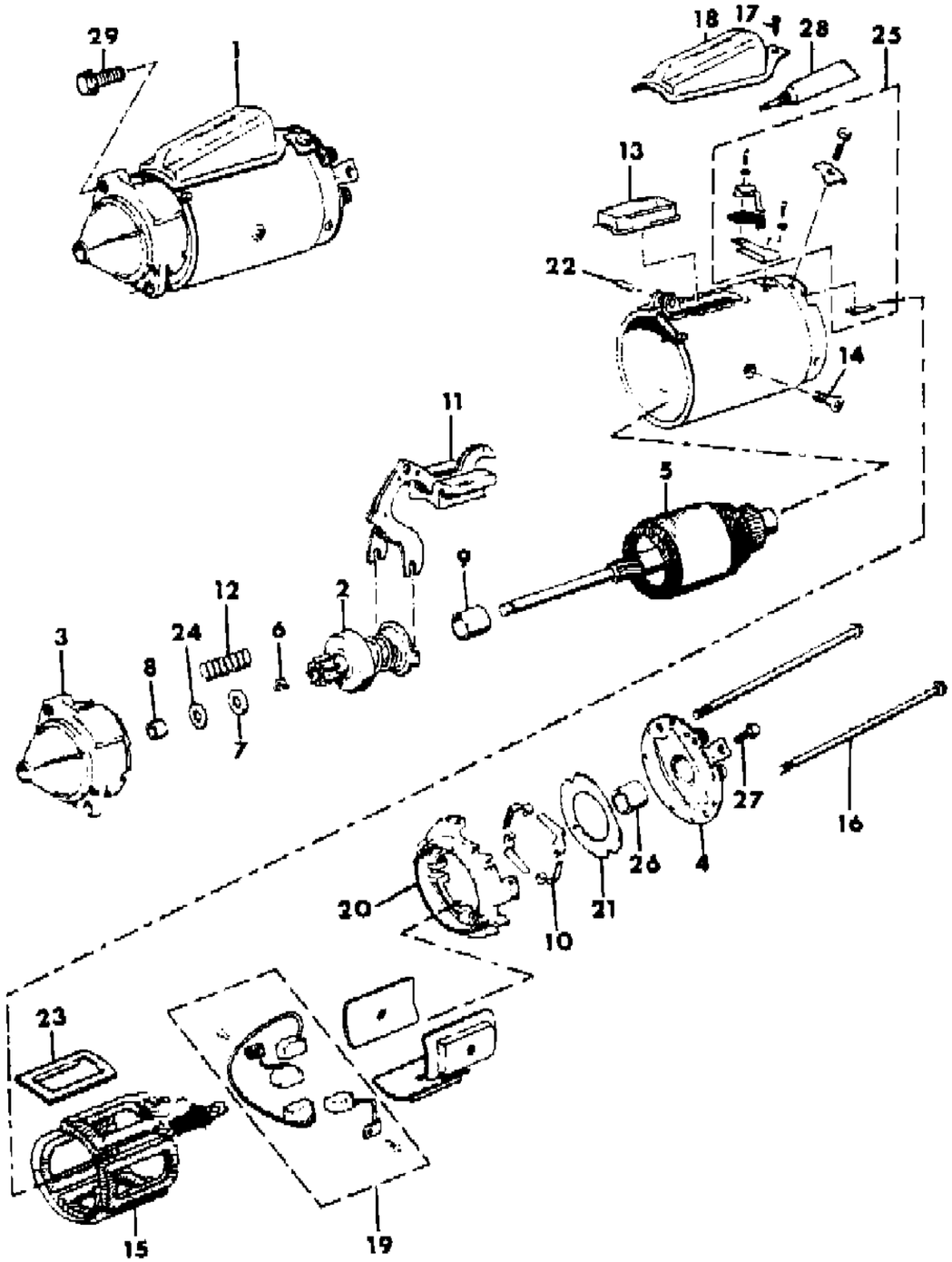

ITEM	PART NUMBER	QTY	BODY	MODEL	DESCRIPTION
1					STARTER ASSEMBLY
	JR77 5001	1			Remanufactured
	J575 2791	1			EXPORT
2	J812 0193	1			DRIVE ASSEMBLY ***
3					HOUSING, Drive
	J448 9353	1			Tagged 3231371 or 3231372
	J813 3036	1			Tagged 5752791
4	J812 8440	1			COVER, Rear
5	J812 0028	1			ARMATURE
6	J320 7418	1			RING
7	J320 7419	1			RETAINER
8	J812 0030	1			BUSHING
9	J812 1196	1			BUSHING
10	J812 8441	4			SPRING
11					LEVER, Drive
	J812 8439	1			Tagged 3231371 or 3231372
	J813 3051	1			Tagged 5752791
12	J320 7426	1			SPRING
13					SLEEVE
	J320 7428	1			Tagged 3231371 or 3231372
	J813 3053	1			Tagged 5752791
14	J812 7992	3			SCREW
15	J812 8438	1			COIL
16	J320 7431	2			BOLT
17	J812 9211	1			BOLT
18					COVER. Lever ***
	J812 9089	1			Tagged 3231371 or 3231372
	J813 3052	1			Tagged 5752791
19	J812 8434	1			BRUSH PACKAGE ***
20	J812 8433	1			HOLDER, Brush
21	J812 8432	1			INSULATOR
22					PIN
	J320 7435	1			Tagged 3231371 or 3231372
	J813 3054	1			Tagged 5752791
23	J320 7427	1			FLANGE ***
24	J812 8444	1			WASHER
25	J812 8446	1			POINTER PACKAGE ***
26	J812 1196	1			BUSHING
27	J400 5982	1			BOLT

MODEL CODES

16=Cherokee 2 Dr.(1981-83)
17=Cherokee 2 Dr.(1981-83)
73=Cherokee 2WD-2 Dr.(1984-86)
74=Cherokee 2WD-4 Dr.(1984-86)
18=Cherokee 4 Dr.(1981-83)
77=Cherokee 4WD-2 Dr.(1984-86)
78=Cherokee 4WD-4 Dr.(1984-86)
85=CJ-5 (1981-83)
86=CJ-6(1981)
87=CJ-7(1981-86)
88=CJ-8, Scrambler(1981-86)
64=Comanche 2WD-6 Ft. Box(1986)
66=Comanche 2WD-7 Ft. Box(1986)
63=Comanche 4WD-6 Ft. Box(1986)
65=Comanche 4WD-7 Ft. Box(1986)
15=Grand Wagoneer 4 Dr.(1984-86)
25=J-10 Truck 7 Ft. Box(1981-84)
26=J10 Truck 8 Ft. Box(1981-86)
27=J-20 Truck 8 Ft. Box(1981-86)
15=Wagoneer 4 Dr.(1981-83)
75=Wagoneer 4WD-4 Dr.(1984-86)

BODY
CJ=CJ-5, CJ-6, CJ-7, CJ-8, Scrambler(1981-86)
MJ=Comanche Pickup(1986)

STYLES
SJ=Wagoneer(1981-83), Grand Wagoneer(1984-86), Cherokee(1981-83), J-10, J-20(1981-86)
XJ=Wagoneer(1984-86), Cherokee(1984-86)

AR = Use as Required - = Non Illustrated Part P.A.R. = Paint as Required

« RETURN TO GROUP INDEX »

STARTER AND MOUNTING 4.2L - SIX CYLINDER 5.9L - EIGHT CYLINDER
Figure 8-2900

81J08 2900

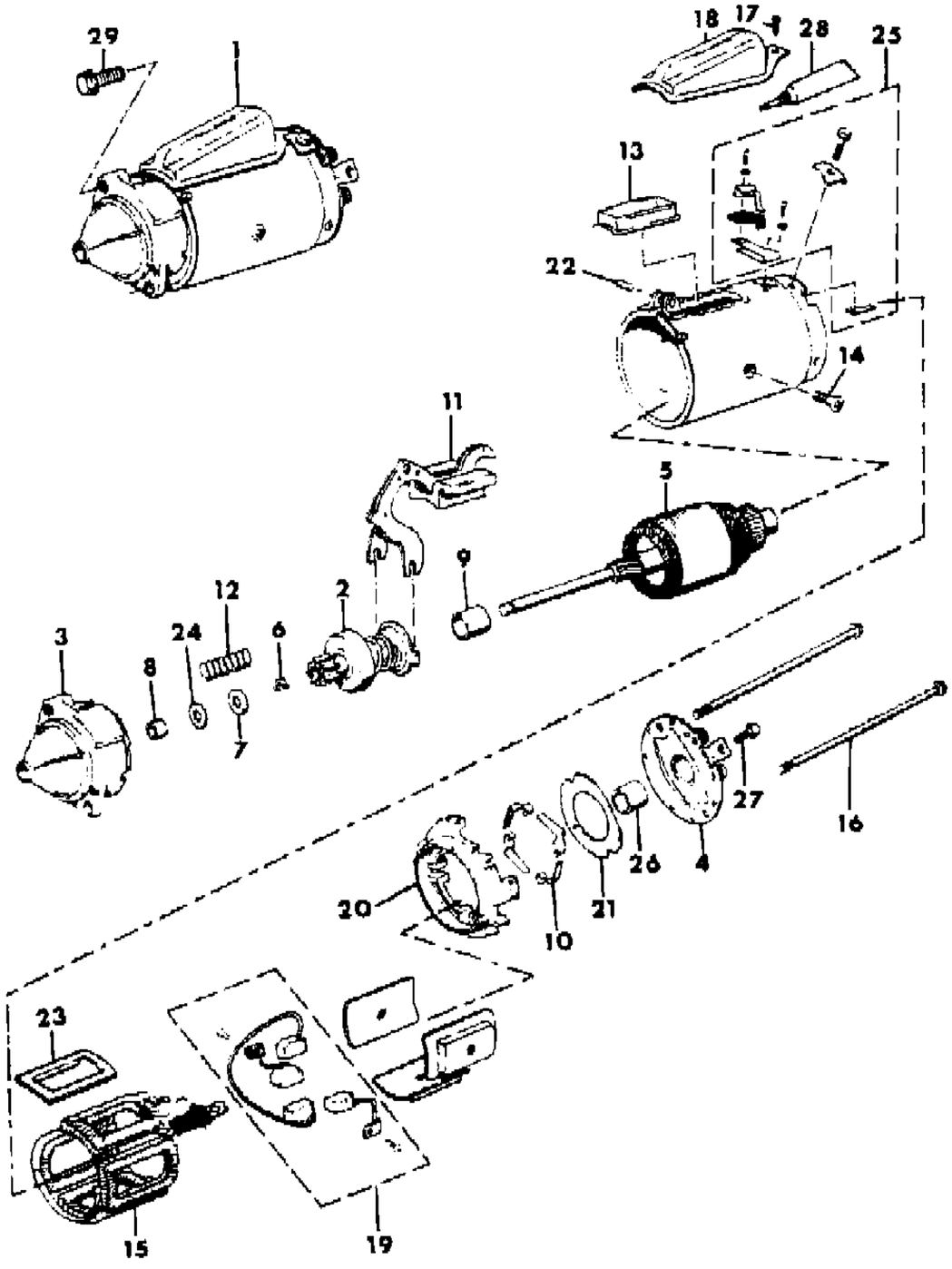

ITEM	PART NUMBER	QTY	BODY	MODEL	DESCRIPTION
28	J899 3317	1			SEALER ***
29					BOLT
	J400 1884	1			(x=1.19")
	J400 6684	1			(x=1.38")

MODEL CODES

16=Cherokee 2 Dr.(1981-83)
17=Cherokee 2 Dr.(1981-83)
73=Cherokee 2WD-2 Dr.(1984-86)
74=Cherokee 2WD-4 Dr.(1984-86)
18=Cherokee 4 Dr.(1981-83)
77=Cherokee 4WD-2 Dr.(1984-86)
78=Cherokee 4WD-4 Dr.(1984-86)
85=CJ-5 (1981-83)
86=CJ-6(1981)
87=CJ-7(1981-86)
88=CJ-8, Scrambler(1981-86)
64=Comanche 2WD-6 Ft. Box(1986)
66=Comanche 2WD-7 Ft. Box(1986)
63=Comanche 4WD-6 Ft. Box(1986)
65=Comanche 4WD-7 Ft. Box(1986)
15=Grand Wagoneer 4 Dr.(1984-86)
25=J-10 Truck 7 Ft. Box(1981-84)
26=J10 Truck 8 Ft. Box(1981-86)
27=J-20 Truck 8 Ft. Box(1981-86)
15=Wagoneer 4 Dr.(1981-83)
75=Wagoneer 4WD-4 Dr.(1984-86)

BODY
CJ=CJ-5, CJ-6, CJ-7, CJ-8, Scrambler(1981-86)
MJ=Comanche Pickup(1986)

STYLES
SJ=Wagoneer(1981-83), Grand Wagoneer(1984-86), Cherokee(1981-83), J-10, J-20(1981-86)
XJ=Wagoneer(1984-86), Cherokee(1984-86)

AR = Use as Required - = Non Illustrated Part P.A.R. = Paint as Required

« RETURN TO GROUP INDEX

STARTER AND MOUNTING 1981-85 ISUZU DIESEL CJ-5,6,7,8 OR SCRAMBLER
Figure 8-3000

81J08 3000

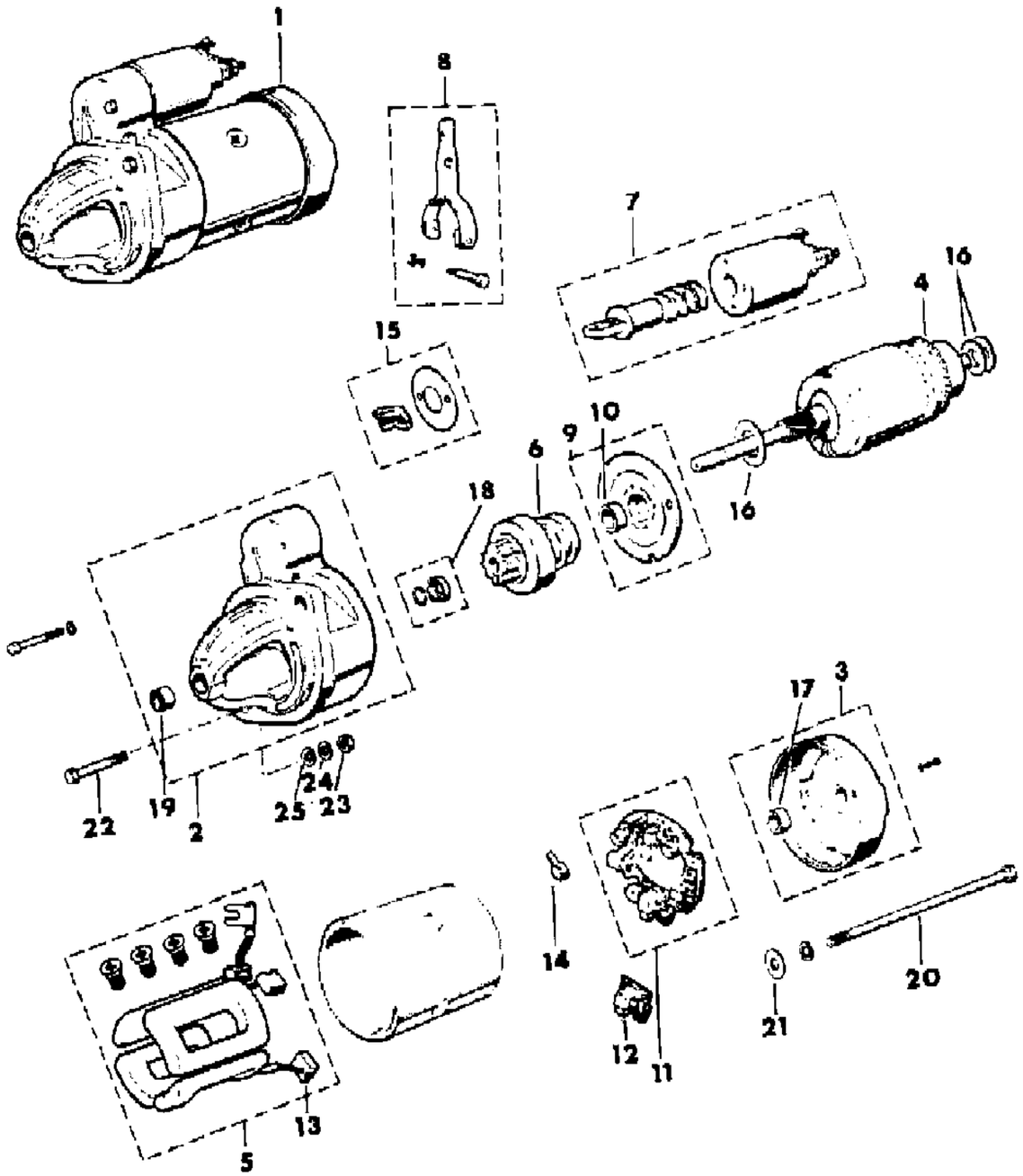

ITEM	PART NUMBER	QTY	BODY	MODEL	DESCRIPTION
1	J806 0426	1			MOTOR, Starting
2	J806 0428	1			HOUSING, Starter Drive
3	J806 0429	1			COVER, Starter Motor
4	J806 0437	1			ARMATURE, Starting Motor
5	J806 0427	1			COIL KIT, Starter Field ***
6	J806 0438	1			DRIVE ASSY, Starter ***
7	J806 0445	1			SOLENOID
8	J806 0439	1			LEVER, Starter Drive
9	J806 0435	1			BEARING ASSY ***
10	J806 0566	1			BEARING
11	J806 0432	1			HOLDER ASSY, Starting Motor Brush ***
12	J806 0431	2			BRUSH, Negative
13	J806 0430	2			BRUSH, Positive
14	J806 0433	4			SPRING
15	J806 0441	1			SHIELD
16	J806 0440	1			WASHER, Thrust
17	J806 0434	1			BEARING
18	J806 0444	1			RETAINER
19	J806 0436	1			BUSHING
20	J806 0442	2			BOLT
21	J806 0443	2			WASHER, Plain
22	J806 0581	2			BOLT
23	J806 0586	2			NUT
24	J806 0066	2			WASHER, Lock
25	J806 0070	4			WASHER, Plain

MODEL CODES

16=Cherokee 2 Dr.(1981-83)
17=Cherokee 2 Dr.(1981-83)
73=Cherokee 2WD-2 Dr.(1984-86)
74=Cherokee 2WD-4 Dr.(1984-86)
18=Cherokee 4 Dr.(1981-83)
77=Cherokee 4WD-2 Dr.(1984-86)
78=Cherokee 4WD-4 Dr.(1984-86)
85=CJ-5 (1981-83)
86=CJ-6(1981)
87=CJ-7(1981-86)
88=CJ-8, Scrambler(1981-86)
64=Comanche 2WD-6 Ft. Box(1986)
66=Comanche 2WD-7 Ft. Box(1986)
63=Comanche 4WD-6 Ft. Box(1986)
65=Comanche 4WD-7 Ft. Box(1986)
15=Grand Wagoneer 4 Dr.(1984-86)
25=J-10 Truck 7 Ft. Box(1981-84)
26=J10 Truck 8 Ft. Box(1981-86)
27=J-20 Truck 8 Ft. Box(1981-86)
15=Wagoneer 4 Dr.(1981-83)
75=Wagoneer 4WD-4 Dr.(1984-86)

BODY
CJ=CJ-5, CJ-6, CJ-7, CJ-8, Scrambler(1981-86)
MJ=Comanche Pickup(1986)

STYLES
SJ=Wagoneer(1981-83), Grand Wagoneer(1984-86), Cherokee(1981-83), J-10, J-20(1981-86)
XJ=Wagoneer(1984-86), Cherokee(1984-86)

AR = Use as Required - = Non Illustrated Part P.A.R. = Paint as Required

« RETURN TO GROUP INDEX

STARTER AND MOUNTING 1986 RENAULT DIESEL CJ-5,6,7,8 OR SCRAMBLER
Figure 8-3100

81J08 3100

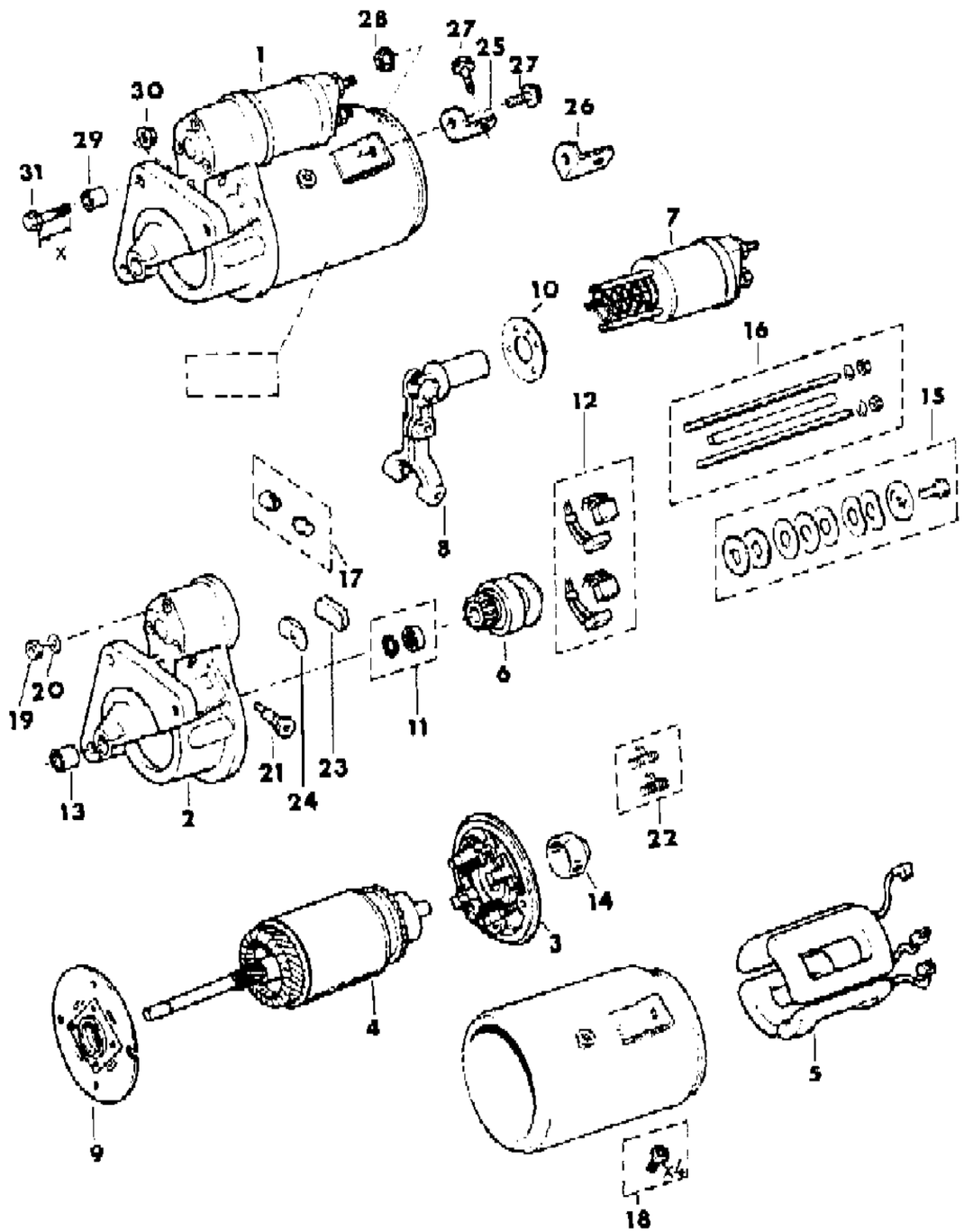

ITEM	PART NUMBER	QTY	BODY	MODEL	DESCRIPTION
1	T066 5613	1			MOTOR, Starting
2	8350 2043	1			HOUSING, Starter Drive
3	8350 2053	1			COVER, Starter Rear
4	8350 2039	1			ARMATURE, Starter Motor
5	8350 2049	1			COIL KIT, Starter Field ***
6	T102 4689	1			DRIVE ASSY, Starter Drive ***
7	T102 4686	1			SOLENOID
8	T102 4690	1			LEVER ASSY, Starter Drive ***
9	8350 2051	1			PLATE, Starter Intermediate
10	T102 4693	1			GASKET
11	8350 2042	1			STOP KIT, Drive ***
12	8350 2055	1			BRUSH KIT, Starter ***
13	8350 2044	1			BUSHING
14	T102 4694	1			BEARING
15	8350 2040	1			HARDWARE KIT ***
16	T120 1408	1			BOLT KIT ***
17	8350 2046	1			PIN SET ***
18	8350 2048	1			SCREW KIT ***
19	T140 5672	3			NUT
20	T140 2057	3			WASHER
21	8350 2047	1			PIN
22	T120 0344	1			SPRING KIT ***
23	T102 4691	1			PAD
24	T102 4692	1			NUT
25	J066 5022	1			BRACKET
26	J072 3818	1			BRACKET
27	3420 1586	4			BOLT
28	3420 1918	2			NUT
29	5300 1858	1			DOWEL ***
30	1150 2812	2			NUT
31	T057 1572	3			BOLT

MODEL CODES
16=Cherokee 2 Dr.(1981-83)
17=Cherokee 2 Dr.(1981-83)
73=Cherokee 2WD-2 Dr.(1984-86)
74=Cherokee 2WD-4 Dr.(1984-86)
18=Cherokee 4 Dr.(1981-83)
77=Cherokee 4WD-2 Dr.(1984-86)
78=Cherokee 4WD-4 Dr.(1984-86)
85=CJ-5 (1981-83)
86=CJ-6(1981)
87=CJ-7(1981-86)
88=CJ-8, Scrambler(1981-86)
64=Comanche 2WD-6 Ft. Box(1986)
66=Comanche 2WD-7 Ft. Box(1986)
63=Comanche 4WD-6 Ft. Box(1986)
65=Comanche 4WD-7 Ft. Box(1986)
15=Grand Wagoneer 4 Dr.(1984-86)
25=J-10 Truck 7 Ft. Box(1981-84)
26=J10 Truck 8 Ft. Box(1981-86)
27=J-20 Truck 8 Ft. Box(1981-86)
15=Wagoneer 4 Dr.(1981-83)
75=Wagoneer 4WD-4 Dr.(1984-86)

BODY
CJ=CJ-5, CJ-6, CJ-7, CJ-8, Scrambler(1981-86)
MJ=Comanche Pickup(1986)

STYLES
SJ=Wagoneer(1981-83), Grand Wagoneer(1984-86), Cherokee(1981-83), J-10, J-20(1981-86)
XJ=Wagoneer(1984-86), Cherokee(1984-86)

AR = Use as Required - = Non Illustrated Part P.A.R. = Paint as Required

« RETURN TO GROUP INDEX

STARTER AND MOUNTING 1984-86 RENAULT DIESEL XJ CHEROKEE, XJ WAGONEER, COMMACHE
Figure 8-3200

81J08 3200

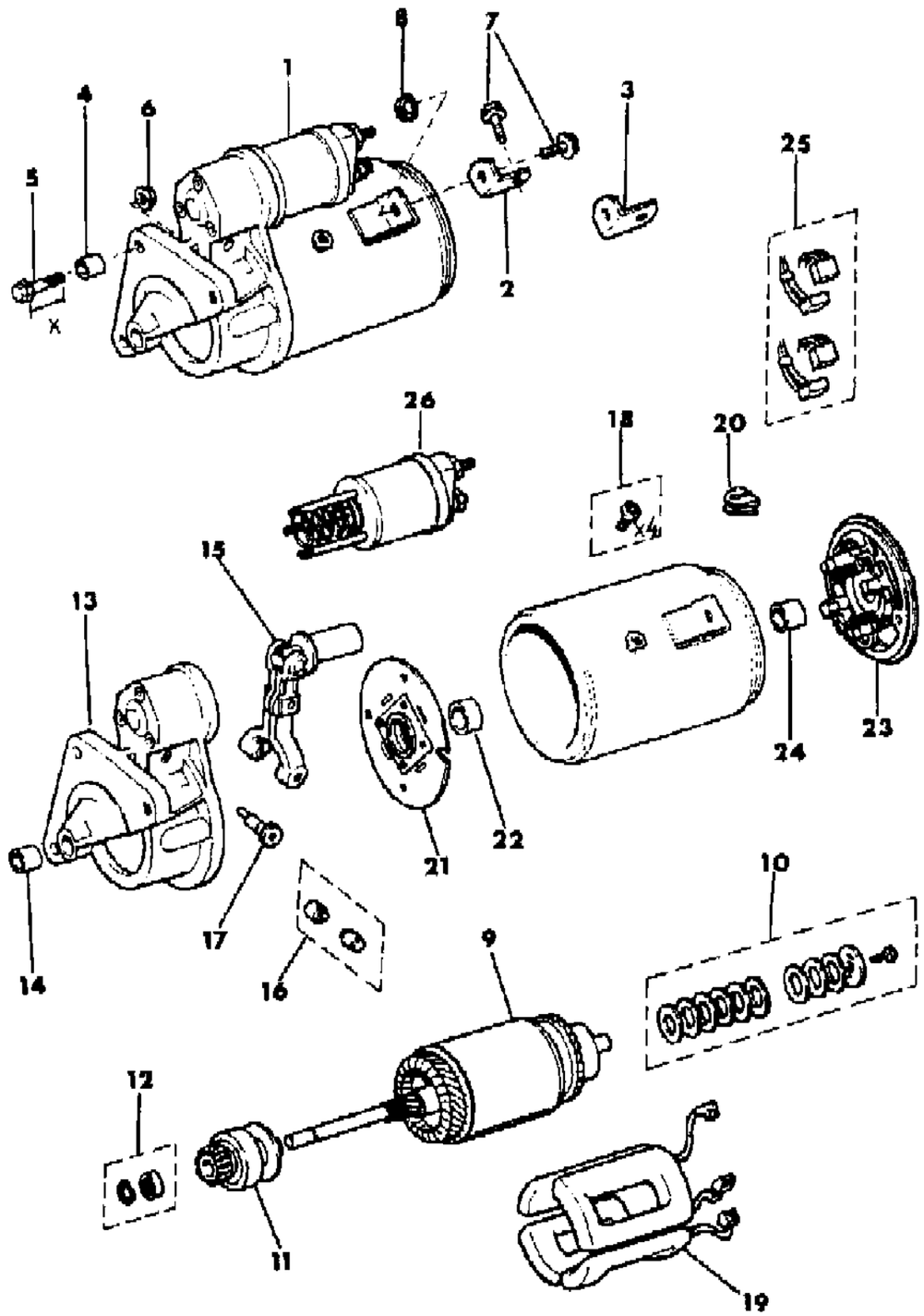

ITEM	PART NUMBER	QTY	BODY	MODEL	DESCRIPTION
1					STARTER ASSEMBLY
	JR77 5042	1			Remanufactured
	5300 2577	1			EXPORT
2	J066 5022	1			BRACKET, Starter Upper
3	J072 3818	1			BRACKET, Starter Lower
4	5300 1858	1			PIN
5					BOLT
					Man. Trans.
	3420 2029	1			X=50mm
	3420 2047	3			X=65mm
					Auto. Trans.
	3420 2029	1			60mm Long
	3420 2047	1			65mm Long
	3420 1972	2			75mm Long
6	1150 2812	2			NUT
7	3420 1586	4			BOLT
8	3420 1918	2			NUT
9	8350 2039	1			ARMATURE, Starter
10	8350 2040	1			HARDWARE PACKAGE
11	8350 2041	1			DRIVE ASSEMBLY, Starter
12	8350 2042	1			STOP PACKAGE, Drive ***
13	8350 2043	1			HOUSING, Starter Drive
14	8350 2044	1			BUSHING
15	8350 2045	1			LEVER ASSEMBLY, Starter Drive ***
16	8350 2046	1			PIN SET
17	8350 2047	1			PIN
18	8350 2048	1			SCREW PACKAGE ***
19	8350 2049	1			COIL PACKAGE, Starter Field ***
20	8350 2050	1			GROMMET
21	8350 2051	1			PLATE, Starter Intermediate
22	8350 2052	1			BUSHING
23	8350 2053	1			COVER, Starter Rear
24	8350 2054	1			BUSHING
25	8350 2055	1			BRUSH PACKAGE, Starter ***
26	8350 2879	1			SOLENOID

MODEL CODES
16=Cherokee 2 Dr.(1981-83)
17=Cherokee 2 Dr.(1981-83)
73=Cherokee 2WD-2 Dr.(1984-86)
74=Cherokee 2WD-4 Dr.(1984-86)
18=Cherokee 4 Dr.(1981-83)
77=Cherokee 4WD-2 Dr.(1984-86)
78=Cherokee 4WD-4 Dr.(1984-86)
85=CJ-5 (1981-83)
86=CJ-6(1981)
87=CJ-7(1981-86)
88=CJ-8, Scrambler(1981-86)
64=Comanche 2WD-6 Ft. Box(1986)
66=Comanche 2WD-7 Ft. Box(1986)
63=Comanche 4WD-6 Ft. Box(1986)
65=Comanche 4WD-7 Ft. Box(1986)
15=Grand Wagoneer 4 Dr.(1984-86)
25=J-10 Truck 7 Ft. Box(1981-84)
26=J10 Truck 8 Ft. Box(1981-86)
27=J-20 Truck 8 Ft. Box(1981-86)
15=Wagoneer 4 Dr.(1981-83)
75=Wagoneer 4WD-4 Dr.(1984-86)

BODY
CJ=CJ-5, CJ-6, CJ-7, CJ-8, Scrambler(1981-86)
MJ=Comanche Pickup(1986)

STYLES
SJ=Wagoneer(1981-83), Grand Wagoneer(1984-86), Cherokee(1981-83), J-10, J-20(1981-86)
XJ=Wagoneer(1984-86), Cherokee(1984-86)

AR = Use as Required - = Non Illustrated Part P.A.R. = Paint as Required

« RETURN TO GROUP INDEX

ALTERNATOR 42-56-63-78 AMP. CJ-5,6,7,8, SCRAMBLER
Figure 8-3300

81J08 3300

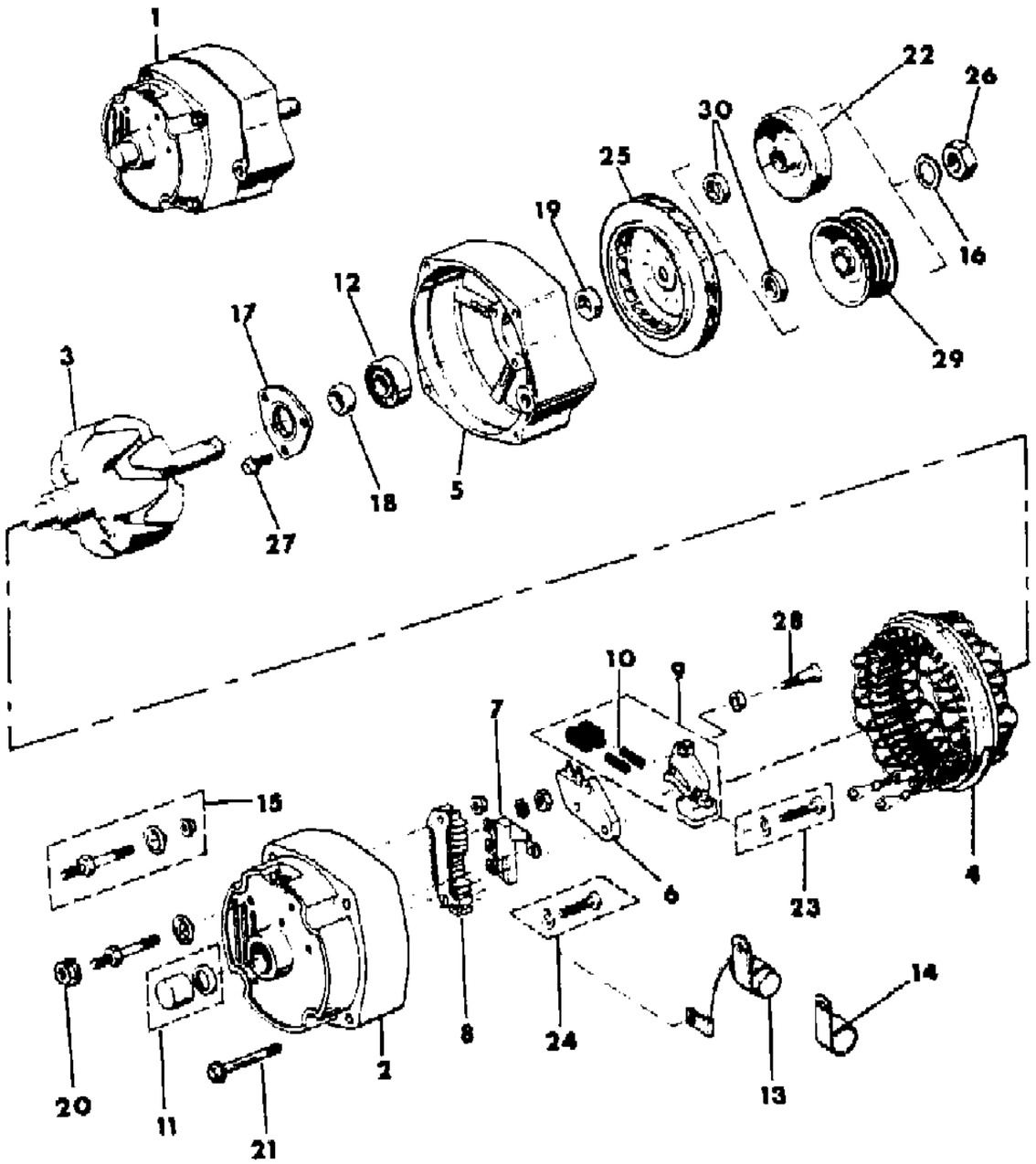

ITEM	PART NUMBER	QTY	BODY	MODEL	DESCRIPTION
1					ALTERNATOR ASSEMBLY
					Remanufactured
	JR77 5005	1			56,63, or 78 Amp
	JR77 5004	1			42 Amp
					EXPORT
	J813 4663	1			42 Amp
	J813 4664	1			56,63, or 73 Amp
2					HOUSING, Rear
	J813 4651	1			Tagged 1105081,1105082,1105083 or 1105084
	J813 2555	1			Tagged 1105079 or 1105080
3					ROTOR, Alternator
	J813 4645	1			Tagged 110 5044, 110 5045, 110 5047 or 110 5048
	J813 4646	1			Tagged 110 5046 or 110 5049
4					STATOR, Alternator
	J813 4649	1			Tagged 1105083, or 1105084
	J813 4648	1			Tagged 1105081 or 1105082
	J813 5174	1			Tagged 1105079 or 1105080
5					HOUSING, Front
	J813 4655	1			Tagged 1105081,1105082,1105083, or 1105084
	J813 4654	1			Tagged 1105079 or 1105080
6	J812 5176	1			REGULATOR, Voltage
7	J813 3268	1			DIODE TRIO ***
8	J813 4650	1			RECTIFIER, Diode
9	J813 4652	1			HOLDER, Brush
10					SPRING
	J813 4653	1			Tagged 1105079,1105081,1105081,1105082,1105083, or 1105084
	J813 3272	1			Tagged 11050080
11	J813 4644	1			BEARING
12	J813 4657	1			BEARING
13	J812 5183	1			CAPACITOR, Alternator
14	J812 5184	1			CLAMP
15	J813 3274	1			TERMINAL
16	J813 3280	1			WASHER
17	J813 4658	1			RETAINER
18	J813 3279	1			COLLAR
19					COLLAR
	J813 4659	1			Tagged 1105081,1105082,1105083, or 1105084
	J813 2696	1			Tagged 1105079 or 1105080

MODEL CODES

16=Cherokee 2 Dr.(1981-83)
17=Cherokee 2 Dr.(1981-83)
73=Cherokee 2WD-2 Dr.(1984-86)
74=Cherokee 2WD-4 Dr.(1984-86)
18=Cherokee 4 Dr.(1981-83)
77=Cherokee 4WD-2 Dr.(1984-86)
78=Cherokee 4WD-4 Dr.(1984-86)
85=CJ-5 (1981-83)
86=CJ-6(1981)
87=CJ-7(1981-86)
88=CJ-8, Scrambler(1981-86)
64=Comanche 2WD-6 Ft. Box(1986)
66=Comanche 2WD-7 Ft. Box(1986)
63=Comanche 4WD-6 Ft. Box(1986)
65=Comanche 4WD-7 Ft. Box(1986)
15=Grand Wagoneer 4 Dr.(1984-86)
25=J-10 Truck 7 Ft. Box(1981-84)
26=J10 Truck 8 Ft. Box(1981-86)
27=J-20 Truck 8 Ft. Box(1981-86)
15=Wagoneer 4 Dr.(1981-83)
75=Wagoneer 4WD-4 Dr.(1984-86)

BODY
CJ=CJ-5, CJ-6, CJ-7, CJ-8, Scrambler(1981-86)
MJ=Comanche Pickup(1986)

STYLES
SJ=Wagoneer(1981-83), Grand Wagoneer(1984-86), Cherokee(1981-83), J-10, J-20(1981-86)
XJ=Wagoneer(1984-86), Cherokee(1984-86)

AR = Use as Required - = Non Illustrated Part P.A.R. = Paint as Required

ALTERNATOR 42-56-63-78 AMP. CJ-5,6,7,8, SCRAMBLER
Figure 8-3300

81J08 3300

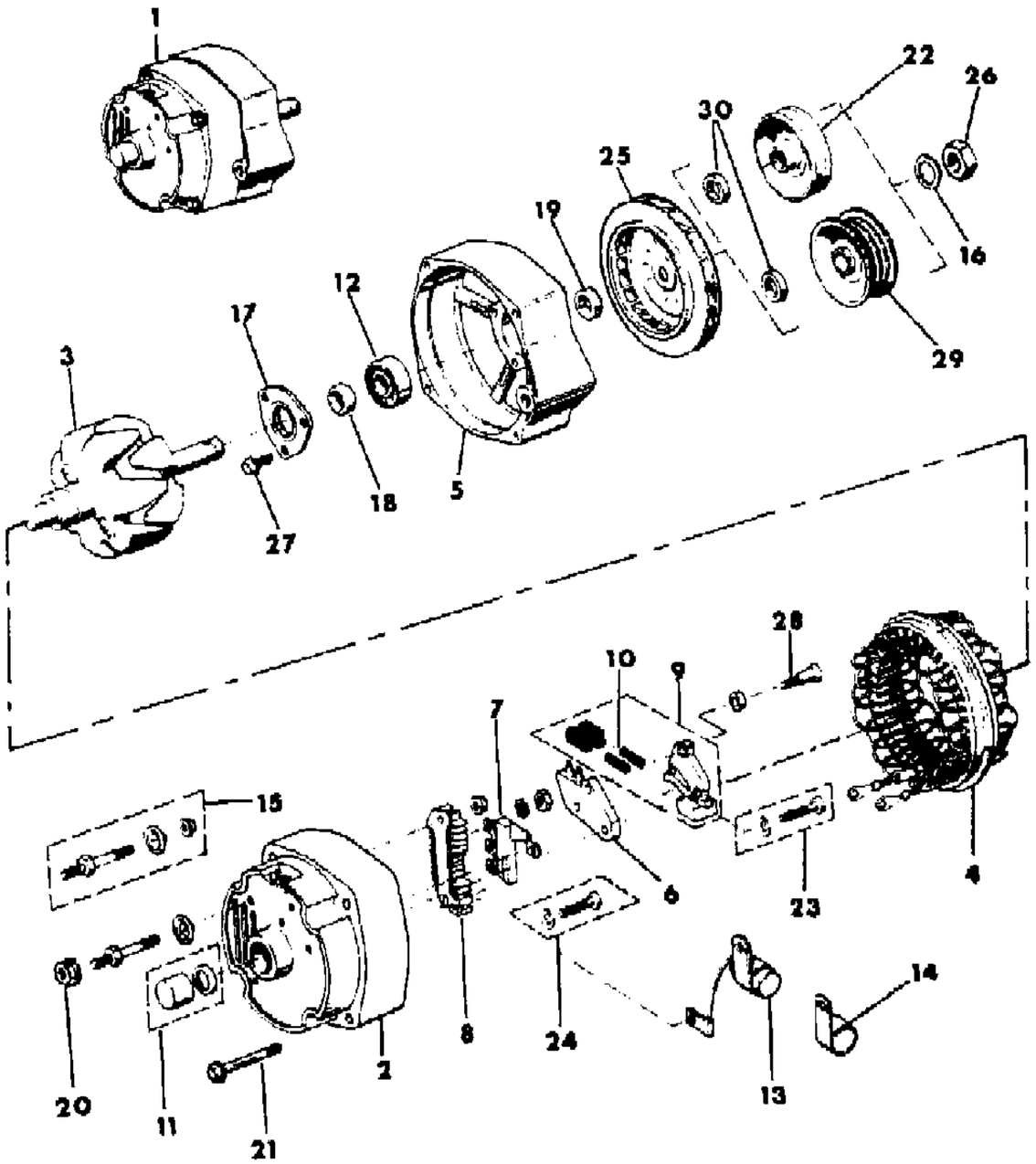

ITEM	PART NUMBER	QTY	BODY	MODEL	DESCRIPTION
20	J420 0453	1			NUT
21	J812 5191	4			BOLT
22	J813 2698	1			PULLEY, Alternator w/o Serpentine Belt Drive
23	J813 3273	1			SCREW
24	J813 4669	1			SCREW
25					FAN, Alternator
	J813 4662	1			Tagged 1105081,1105084,1105083 or 1105084
	J813 2695	1			Tagged 1105079
	J813 5193	1			Tagged 1105080
26	J812 5242	1			NUT
27	J813 4668	3			SCREW
28	J812 5244	2			SCREW
29	J813 4194	1			PULLEY, Alternator w/Serpentine Belt Drive
30	J813 3299	1			COLLAR

MODEL CODES

16=Cherokee 2 Dr.(1981-83)
17=Cherokee 2 Dr.(1981-83)
73=Cherokee 2WD-2 Dr.(1984-86)
74=Cherokee 2WD-4 Dr.(1984-86)
18=Cherokee 4 Dr.(1981-83)
77=Cherokee 4WD-2 Dr.(1984-86)
78=Cherokee 4WD-4 Dr.(1984-86)
85=CJ-5 (1981-83)
86=CJ-6(1981)
87=CJ-7(1981-86)
88=CJ-8, Scrambler(1981-86)
64=Comanche 2WD-6 Ft. Box(1986)
66=Comanche 2WD-7 Ft. Box(1986)
63=Comanche 4WD-6 Ft. Box(1986)
65=Comanche 4WD-7 Ft. Box(1986)
15=Grand Wagoneer 4 Dr.(1984-86)
25=J-10 Truck 7 Ft. Box(1981-84)
26=J10 Truck 8 Ft. Box(1981-86)
27=J-20 Truck 8 Ft. Box(1981-86)
15=Wagoneer 4 Dr.(1981-83)
75=Wagoneer 4WD-4 Dr.(1984-86)

BODY
CJ=CJ-5, CJ-6, CJ-7, CJ-8, Scrambler(1981-86)
MJ=Comanche Pickup(1986)

STYLES
SJ=Wagoneer(1981-83), Grand Wagoneer(1984-86), Cherokee(1981-83), J-10, J-20(1981-86)
XJ=Wagoneer(1984-86), Cherokee(1984-86)

AR = Use as Required - = Non Illustrated Part P.A.R. = Paint as Required

« RETURN TO GROUP INDEX

ALTERNATOR AND MOUNTING 85-94 AMP. CJ-5,6,7,8, SCRAMBLER
Figure 8-3400

81J08 3400

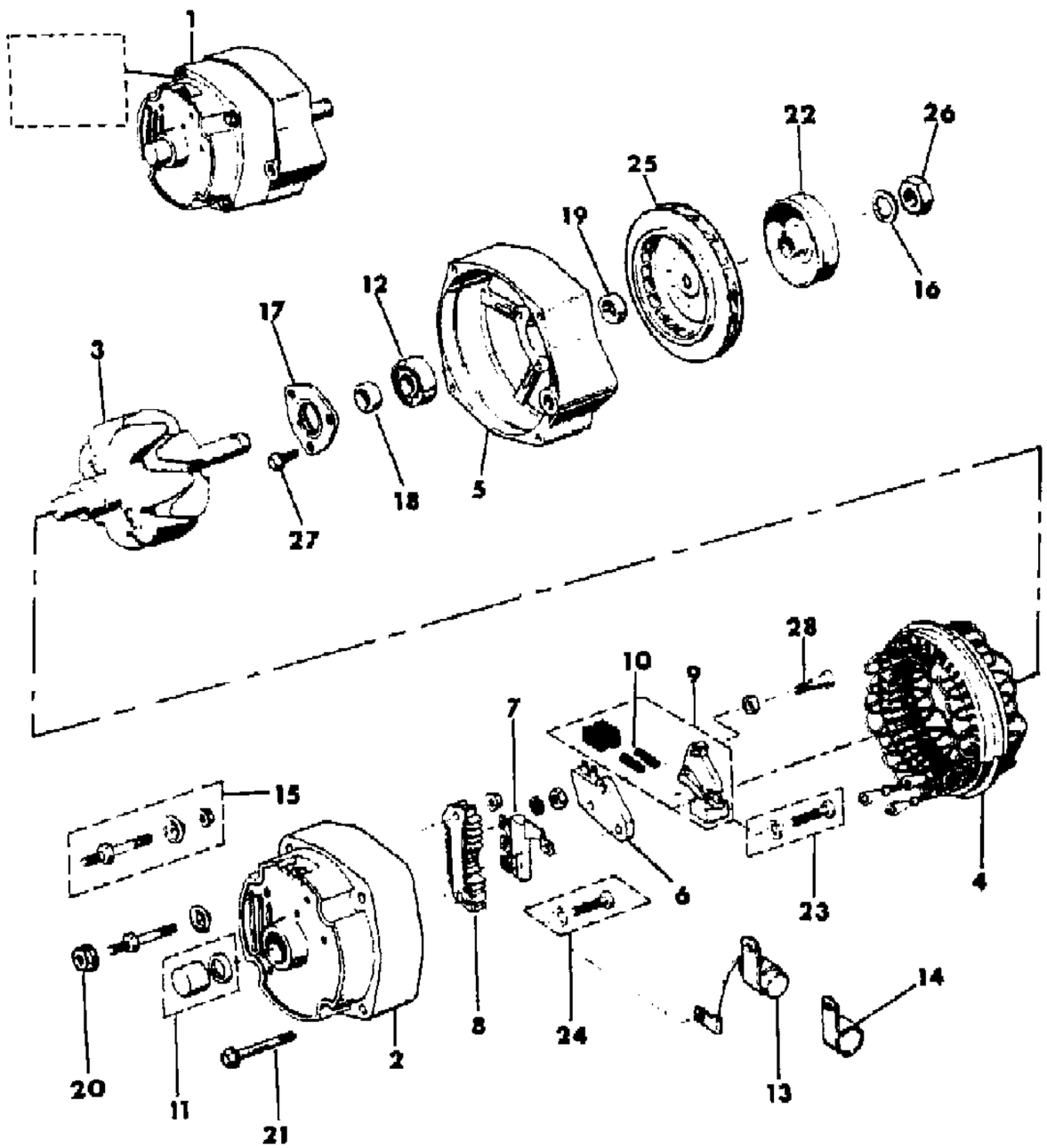

ITEM	PART NUMBER	QTY	BODY	MODEL	DESCRIPTION
1					ALTERNATOR
	J813 4666	1			85 Ampere
	8350 5104	1			94 Ampere
2					HOUSING, Rear
	J813 3266	1			Tagged 1105346
					Tagged 1101484 (Not Serviced)
3					ROTOR
	J813 4646	1			Tagged 1101484
	J813 3264	1			Tagged 1105346
4					STATOR, Alternator
	J813 3265	1			Tagged 1105346 ***
					Tagged 1101484 (Not Serviced)
5					HOUSING, Alternator Front
	J813 4656	1			Tagged 1105346
					Tagged 1101484 (Not Serviced)
6					REGULATOR, Voltage
	J812 5176	1			Tagged 1105346
	8350 5214	1			Tagged 1101484
7	J813 3268	1			DIODE TRIO ***
8					RECTIFIER, Diode
	J813 3269	1			Tagged 1105346
	8350 5216	1			Tagged 1101484
9					HOLDER, Brush
	J813 3271	1			Tagged 1105346
	J813 4652	1			Tagged 1101484
10	J813 4653	1			SPRING
11					BEARING
	J812 5181	1			
	8350 5217	1			Tagged 1101484
12					BEARING
	J813 4657	1			Tagged 1105346
	8350 5215	1			Tagged 1101484
13	J812 5183	1			CAPACITOR, Alternator
14	J812 5184	1			CLAMP
15	J813 3274	1			TERMINAL
16	J813 3280	1			WASHER
17	J813 4658	1			RETAINER
18					COLLAR
	J813 4661	1			Tagged 1105346

MODEL CODES

16=Cherokee 2 Dr.(1981-83)
17=Cherokee 2 Dr.(1981-83)
73=Cherokee 2WD-2 Dr.(1984-86)
74=Cherokee 2WD-4 Dr.(1984-86)
18=Cherokee 4 Dr.(1981-83)
77=Cherokee 4WD-2 Dr.(1984-86)
78=Cherokee 4WD-4 Dr.(1984-86)
85=CJ-5 (1981-83)
86=CJ-6(1981)
87=CJ-7(1981-86)
88=CJ-8, Scrambler(1981-86)
64=Comanche 2WD-6 Ft. Box(1986)
66=Comanche 2WD-7 Ft. Box(1986)
63=Comanche 4WD-6 Ft. Box(1986)
65=Comanche 4WD-7 Ft. Box(1986)
15=Grand Wagoneer 4 Dr.(1984-86)
25=J-10 Truck 7 Ft. Box(1981-84)
26=J10 Truck 8 Ft. Box(1981-86)
27=J-20 Truck 8 Ft. Box(1981-86)
15=Wagoneer 4 Dr.(1981-83)
75=Wagoneer 4WD-4 Dr.(1984-86)

BODY
CJ=CJ-5, CJ-6, CJ-7, CJ-8, Scrambler(1981-86)
MJ=Comanche Pickup(1986)

STYLES
SJ=Wagoneer(1981-83), Grand Wagoneer(1984-86), Cherokee(1981-83), J-10, J-20(1981-86)
XJ=Wagoneer(1984-86), Cherokee(1984-86)

AR = Use as Required - = Non Illustrated Part P.A.R. = Paint as Required

ALTERNATOR AND MOUNTING 85-94 AMP. CJ-5,6,7,8, SCRAMBLER
Figure 8-3400

81J08 3400

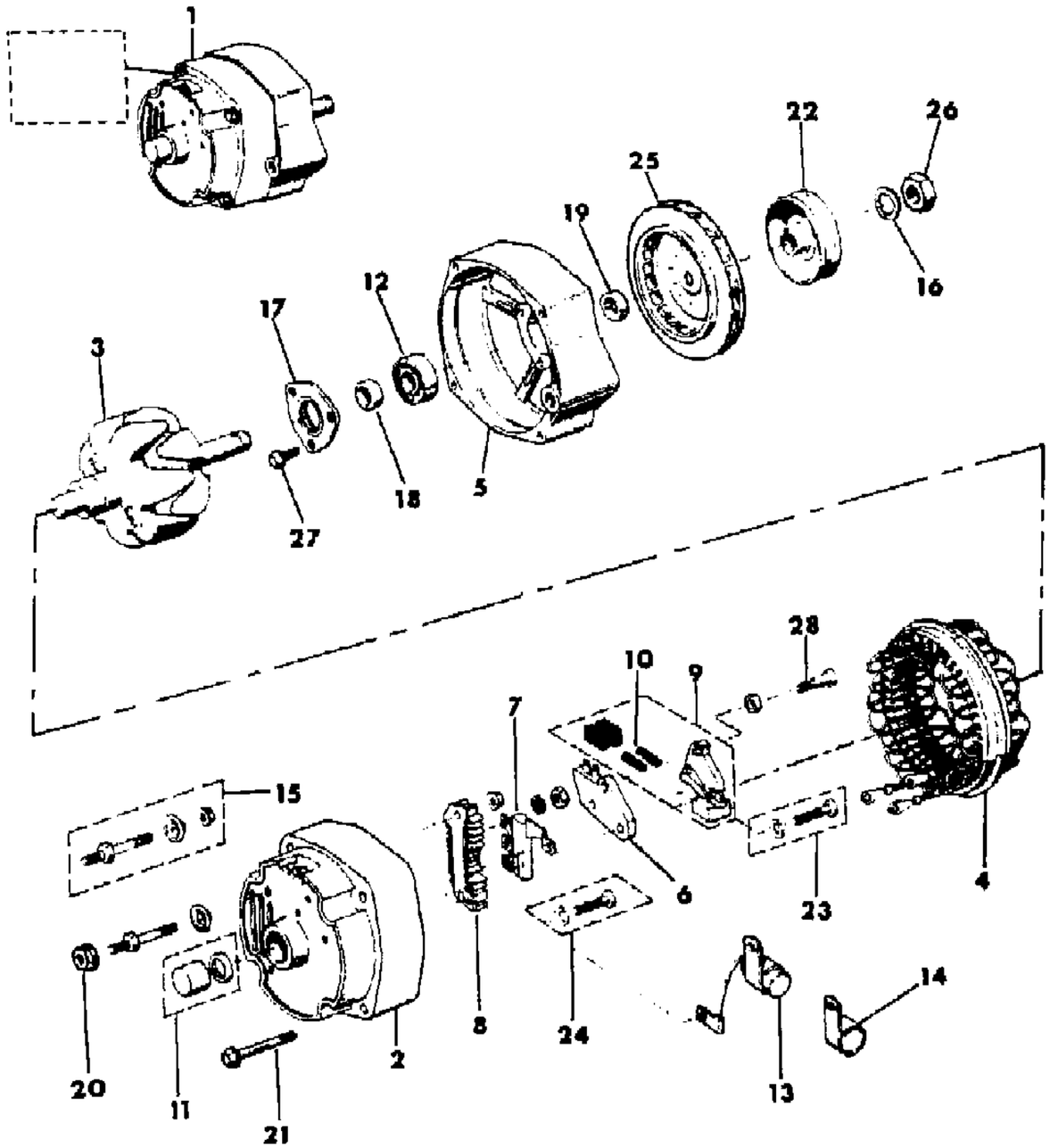

ITEM	PART NUMBER	QTY	BODY	MODEL	DESCRIPTION
	J813 3279	1			Tagged 1101484
19					COLLAR
	J813 4660	1			Tagged 1105346
	J813 4659	1			Tagged 1101484
20	J420 0453	1			NUT
21	J812 5191	4			BOLT
22	J812 8522	1			PULLEY, Alternator Without Serpentine Belt
23	J813 3273	1			SCREW
24	J813 4669	1			SCREW
25					FAN, Alternator
	J813 3281	1			Tagged 1105346
	J813 4662	1			Tagged 1101484
26	J812 5242	1			NUT
27	J813 4668	3			SCREW
28	J812 5244	2			SCREW

MODEL CODES

16=Cherokee 2 Dr.(1981-83)
17=Cherokee 2 Dr.(1981-83)
73=Cherokee 2WD-2 Dr.(1984-86)
74=Cherokee 2WD-4 Dr.(1984-86)
18=Cherokee 4 Dr.(1981-83)
77=Cherokee 4WD-2 Dr.(1984-86)
78=Cherokee 4WD-4 Dr.(1984-86)
85=CJ-5 (1981-83)
86=CJ-6(1981)
87=CJ-7(1981-86)
88=CJ-8, Scrambler(1981-86)
64=Comanche 2WD-6 Ft. Box(1986)
66=Comanche 2WD-7 Ft. Box(1986)
63=Comanche 4WD-6 Ft. Box(1986)
65=Comanche 4WD-7 Ft. Box(1986)
15=Grand Wagoneer 4 Dr.(1984-86)
25=J-10 Truck 7 Ft. Box(1981-84)
26=J10 Truck 8 Ft. Box(1981-86)
27=J-20 Truck 8 Ft. Box(1981-86)
15=Wagoneer 4 Dr.(1981-83)
75=Wagoneer 4WD-4 Dr.(1984-86)

BODY
CJ=CJ-5, CJ-6, CJ-7, CJ-8, Scrambler(1981-86)
MJ=Comanche Pickup(1986)

STYLES
SJ=Wagoneer(1981-83), Grand Wagoneer(1984-86), Cherokee(1981-83), J-10, J-20(1981-86)
XJ=Wagoneer(1984-86), Cherokee(1984-86)

AR = Use as Required - = Non Illustrated Part P.A.R. = Paint as Required

« RETURN TO GROUP INDEX

ALTERNATOR 70 AMP. CJ-5,6,7,8, SCRAMBLER
Figure 8-3500

81J08 3500

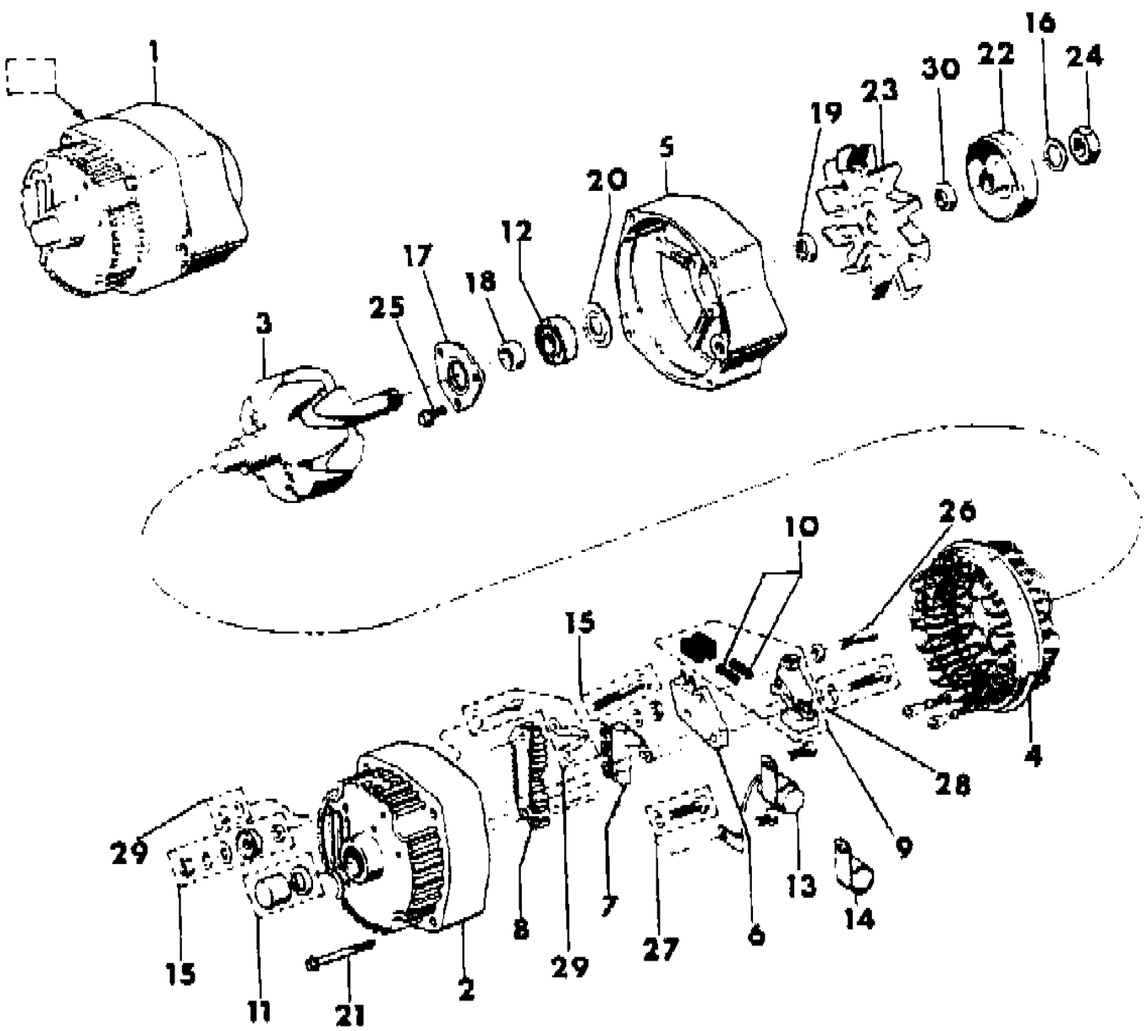

ITEM	PART NUMBER	QTY	BODY	MODEL	DESCRIPTION
1					ALTERNATOR
	JR77 5007	1			Remanufactured
	J813 3346	1			EXPORT
2	J813 3266	1			HOUSING, Alternator Rear
3	J813 3264	1			ROTOR, Alternator
4	J813 3265	1			STATOR, Alternator
5					HOUSING, Front
	J813 3276	1			Tagged 1101087,1101094,1101093,1101436 or 1100223
	J813 4656	1			Tagged 1105347
6	J812 5176	1			REGULATOR, Voltage
7	J813 3268	1			DIODE TRIO ***
8	J813 3269	1			RECTIFIER, Diode
9	J813 3271	1			HOLDER, Alternator Brush
10	J813 3272	2			SPRING
11	J813 3267	1			BEARING
12					BEARING
	J813 3277	1			Tagged 1101087,1101094,1101093,1101436, or 1100223
	J813 4657	1			Tagged 1105347
13					CAPACITOR
	J813 3275	1			Tagged 1101087,1101094,1101093,1101436, or 1100223
	J812 5183	1			Tagged 1105347
14	J812 5184	1			CLAMP
15	J813 3274	1			TERMINAL
16	J813 3280	1			WASHER
17					RETAINER
	J812 5187	1			Tagged 1101087,1101094,1101093,1101436, or 1100223
	J812 4658	1			Tagged 1105347
18					COLLAR
	J813 3279	1			Tagged 1101087,1101094,1101093,1101436, or 1100223
	J813 4661	1			Tagged 1105347
19					COLLAR
	J813 3278	1			Tagged 1101087,1101094,1101093,1101436, or 1100223
	J813 4660	1			Tagged 1105347
20	J812 5190	1			WASHER
21	J812 5191	4			BOLT
22					PULLEY
	J812 3282	1			Tagged 1101087
	J812 8522	1			Tagged 1101093,1101094
	J813 4194	1			Tagged 1100223

MODEL CODES

16=Cherokee 2 Dr.(1981-83)
17=Cherokee 2 Dr.(1981-83)
73=Cherokee 2WD-2 Dr.(1984-86)
74=Cherokee 2WD-4 Dr.(1984-86)
18=Cherokee 4 Dr.(1981-83)
77=Cherokee 4WD-2 Dr.(1984-86)
78=Cherokee 4WD-4 Dr.(1984-86)
85=CJ-5 (1981-83)
86=CJ-6(1981)
87=CJ-7(1981-86)
88=CJ-8, Scrambler(1981-86)
64=Comanche 2WD-6 Ft. Box(1986)
66=Comanche 2WD-7 Ft. Box(1986)
63=Comanche 4WD-6 Ft. Box(1986)
65=Comanche 4WD-7 Ft. Box(1986)
15=Grand Wagoneer 4 Dr.(1984-86)
25=J-10 Truck 7 Ft. Box(1981-84)
26=J10 Truck 8 Ft. Box(1981-86)
27=J-20 Truck 8 Ft. Box(1981-86)
15=Wagoneer 4 Dr.(1981-83)
75=Wagoneer 4WD-4 Dr.(1984-86)

BODY
CJ=CJ-5, CJ-6, CJ-7, CJ-8, Scrambler(1981-86)
MJ=Comanche Pickup(1986)

STYLES
SJ=Wagoneer(1981-83), Grand Wagoneer(1984-86), Cherokee(1981-83), J-10, J-20(1981-86)
XJ=Wagoneer(1984-86), Cherokee(1984-86)

AR = Use as Required - = Non Illustrated Part P.A.R. = Paint as Required

ALTERNATOR 70 AMP. CJ-5,6,7,8, SCRAMBLER
Figure 8-3500

81J08 3500

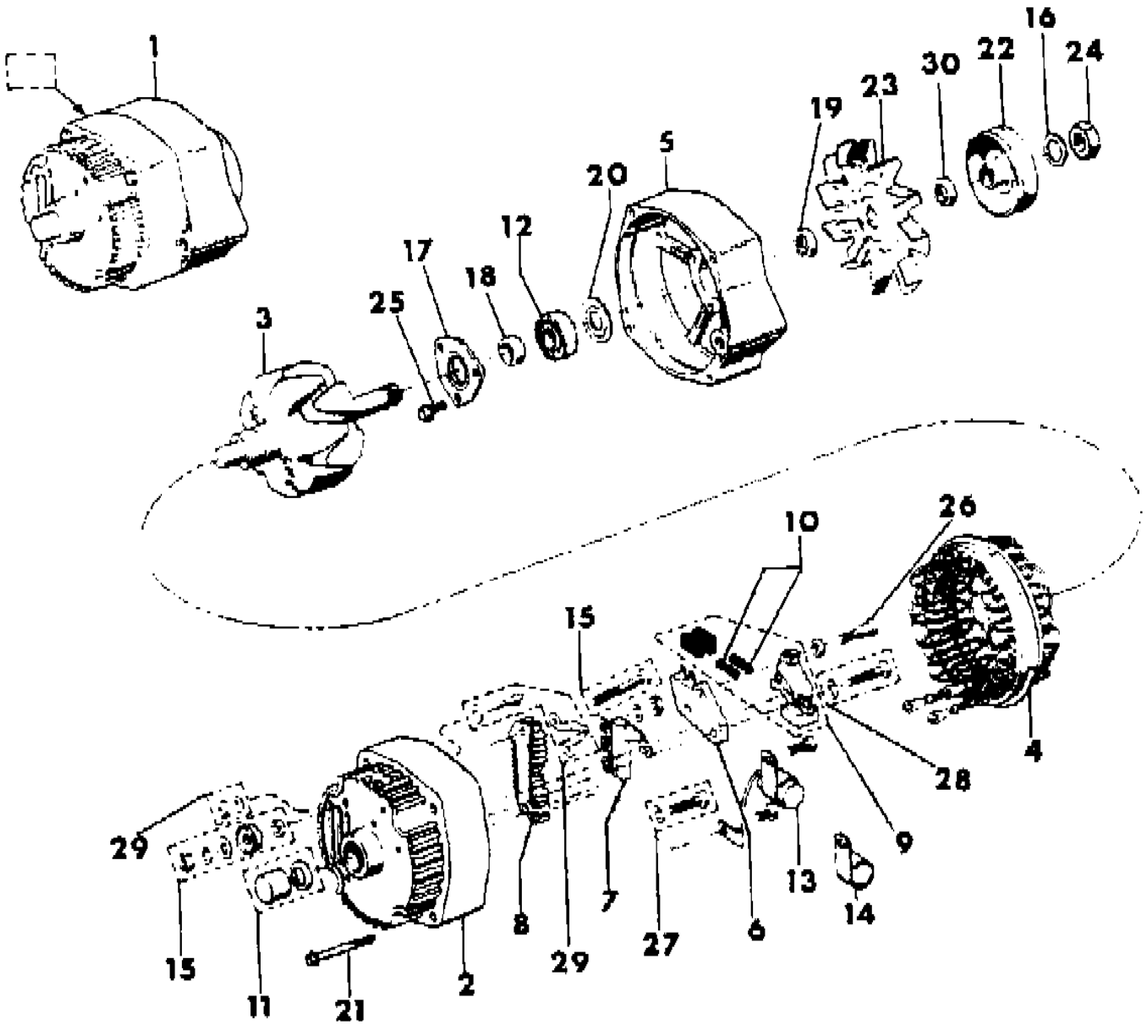

ITEM	PART NUMBER	QTY	BODY	MODEL	DESCRIPTION
23					FAN, Alternator
	J813 3281	1			Tagged 1101087,1101094,1101093, or 1100223
24	J812 5242	1			NUT
25					SCREW
	J812 5243	3			Tagged 1101087,1101094,1101093,1101436, or 1100223
	J813 4668	3			Tagged 1105347
26	J812 5244	2			SCREW
27	J812 5245	1			SCREW
28	J812 3273	1			SCREW
29	J812 3274	1			TERMINAL
30	J813 3433	1			COLLAR

MODEL CODES

16=Cherokee 2 Dr.(1981-83)
17=Cherokee 2 Dr.(1981-83)
73=Cherokee 2WD-2 Dr.(1984-86)
74=Cherokee 2WD-4 Dr.(1984-86)
18=Cherokee 4 Dr.(1981-83)
77=Cherokee 4WD-2 Dr.(1984-86)
78=Cherokee 4WD-4 Dr.(1984-86)
85=CJ-5 (1981-83)
86=CJ-6(1981)
87=CJ-7(1981-86)
88=CJ-8, Scrambler(1981-86)
64=Comanche 2WD-6 Ft. Box(1986)
66=Comanche 2WD-7 Ft. Box(1986)
63=Comanche 4WD-6 Ft. Box(1986)
65=Comanche 4WD-7 Ft. Box(1986)
15=Grand Wagoneer 4 Dr.(1984-86)
25=J-10 Truck 7 Ft. Box(1981-84)
26=J10 Truck 8 Ft. Box(1981-86)
27=J-20 Truck 8 Ft. Box(1981-86)
15=Wagoneer 4 Dr.(1981-83)
75=Wagoneer 4WD-4 Dr.(1984-86)

BODY
CJ=CJ-5, CJ-6, CJ-7, CJ-8, Scrambler(1981-86)
MJ=Comanche Pickup(1986)

STYLES
SJ=Wagoneer(1981-83), Grand Wagoneer(1984-86), Cherokee(1981-83), J-10, J-20(1981-86)
XJ=Wagoneer(1984-86), Cherokee(1984-86)

AR = Use as Required - = Non Illustrated Part P.A.R. = Paint as Required

« RETURN TO GROUP INDEX

ALTERNATOR 81-85 ISUZU DIESEL CJ-5,6,7,8, SCRAMBLER
Figure 8-3600

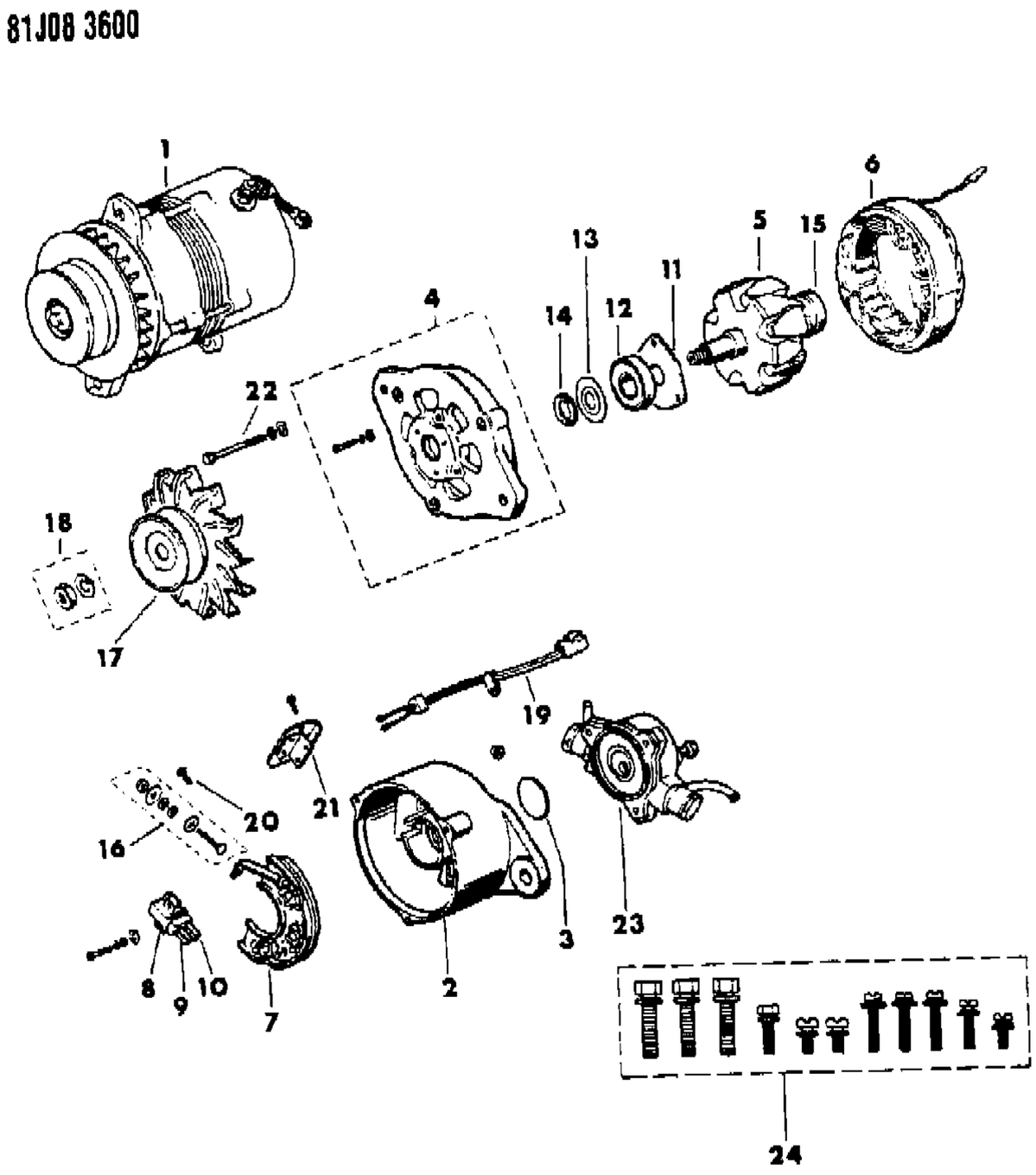

ITEM	PART NUMBER	QTY	BODY	MODEL	DESCRIPTION
1					ALTERNATOR
	J806 0446	1			w/Vacuum Pump
	8350 2191	1			w/o Vacuum Pump
2	J806 0449	1			HOUSING, Alternator Rear
3	J806 0450	1			COVER
4	J806 0448	1			HOUSING, Alternator Front
5	J806 0460	1			ROTOR, Alternator
6	J806 0447	1			STATOR, Alternator
7	J806 0459	1			DIODE
8	J806 0452	1			BRUSH KIT, Alternator ***
9	J806 0453	1			BRUSH
10	J806 0454	1			BRUSH
11	J806 0473	1			RETAINER
12	J806 0001	1			BEARING
13	J806 0474	1			RETAINER, Seal
14	J806 0567	1			SEAL
15	J806 0000	1			BEARING
16	J806 0476	1			TERMINAL
17	J806 0462	1			FAN, Alternator
18	J806 0585	1			NUT
19	J806 0455	1			LEAD ***
20	J806 0475	1			BOLT
21	J806 0451	1			COVER
22	J806 0472	1			BOLT
23	8350 2082	1			PUMP, Vacuum
24	J806 0477	1			BOLT KIT ***

MODEL CODES

16=Cherokee 2 Dr.(1981-83)
17=Cherokee 2 Dr.(1981-83)
73=Cherokee 2WD-2 Dr.(1984-86)
74=Cherokee 2WD-4 Dr.(1984-86)
18=Cherokee 4 Dr.(1981-83)
77=Cherokee 4WD-2 Dr.(1984-86)
78=Cherokee 4WD-4 Dr.(1984-86)
85=CJ-5 (1981-83)
86=CJ-6(1981)
87=CJ-7(1981-86)
88=CJ-8, Scrambler(1981-86)
64=Comanche 2WD-6 Ft. Box(1986)
66=Comanche 2WD-7 Ft. Box(1986)
63=Comanche 4WD-6 Ft. Box(1986)
65=Comanche 4WD-7 Ft. Box(1986)
15=Grand Wagoneer 4 Dr.(1984-86)
25=J-10 Truck 7 Ft. Box(1981-84)
26=J10 Truck 8 Ft. Box(1981-86)
27=J-20 Truck 8 Ft. Box(1981-86)
15=Wagoneer 4 Dr.(1981-83)
75=Wagoneer 4WD-4 Dr.(1984-86)

BODY
CJ=CJ-5, CJ-6, CJ-7, CJ-8, Scrambler(1981-86)
MJ=Comanche Pickup(1986)

STYLES
SJ=Wagoneer(1981-83), Grand Wagoneer(1984-86), Cherokee(1981-83), J-10, J-20(1981-86)
XJ=Wagoneer(1984-86), Cherokee(1984-86)

AR = Use as Required - = Non Illustrated Part P.A.R. = Paint as Required

« RETURN TO GROUP INDEX

ALTERNATOR 1986 RENAULT DIESEL CJ-5,6,7,8, SCRAMBLER
Figure 8-3700

81J08 3700

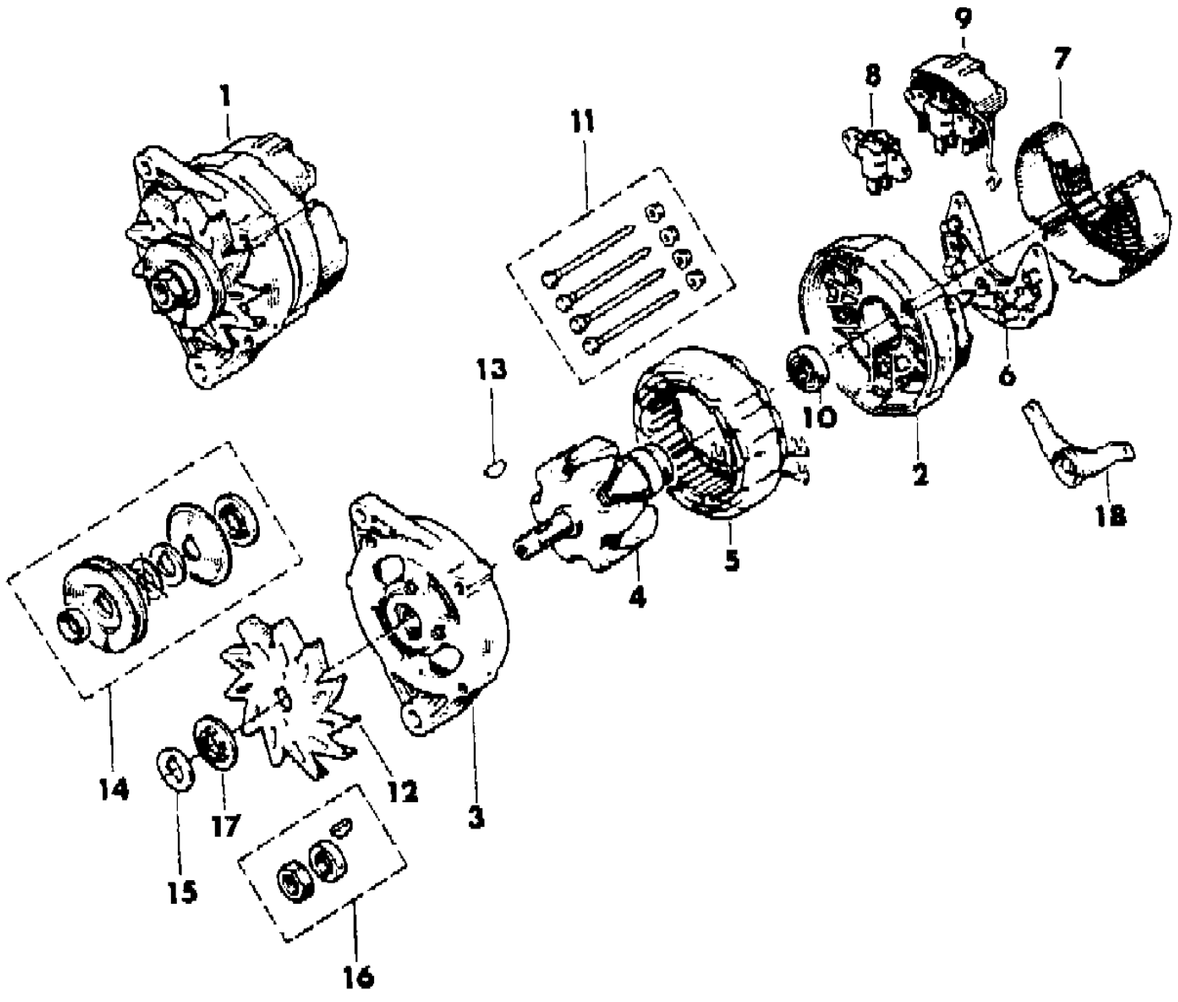

ITEM	PART NUMBER	QTY	BODY	MODEL	DESCRIPTION
1	T070 9420	1			ALTERNATOR
2	T102 6591	1			HOUSING, Alternator Rear
3	T102 6590	1			HOUSING, Alternator Front
4	T102 6588	1			ROTOR, Alternator
5	T102 6589	1			STATOR, Alternator
6	T102 9999	1			RECTIFIER, Diode
7	T102 6595	1			COVER
8	8350 2001	1			HOLDER, Alternator Brush
9	8350 2023	1			REGULATOR, Voltage
10	T569 8900	1			BEARING
11	8350 2008	1			BOLT KIT ***
12	T102 6594	1			FAN, ALternator
13	T351 5400	1			KEY
14	T120 1416	1			PULLEY
15	T102 3644	1			WASHER
16	8350 2001	1			BEARING PACKAGE
17	T102 3642	1			WASHER
18	T102 6596	1			BRACKET

MODEL CODES

16=Cherokee 2 Dr.(1981-83)
17=Cherokee 2 Dr.(1981-83)
73=Cherokee 2WD-2 Dr.(1984-86)
74=Cherokee 2WD-4 Dr.(1984-86)
18=Cherokee 4 Dr.(1981-83)
77=Cherokee 4WD-2 Dr.(1984-86)
78=Cherokee 4WD-4 Dr.(1984-86)
85=CJ-5 (1981-83)
86=CJ-6(1981)
87=CJ-7(1981-86)
88=CJ-8, Scrambler(1981-86)
64=Comanche 2WD-6 Ft. Box(1986)
66=Comanche 2WD-7 Ft. Box(1986)
63=Comanche 4WD-6 Ft. Box(1986)
65=Comanche 4WD-7 Ft. Box(1986)
15=Grand Wagoneer 4 Dr.(1984-86)
25=J-10 Truck 7 Ft. Box(1981-84)
26=J10 Truck 8 Ft. Box(1981-86)
27=J-20 Truck 8 Ft. Box(1981-86)
15=Wagoneer 4 Dr.(1981-83)
75=Wagoneer 4WD-4 Dr.(1984-86)

BODY
CJ=CJ-5, CJ-6, CJ-7, CJ-8, Scrambler(1981-86)
MJ=Comanche Pickup(1986)

STYLES
SJ=Wagoneer(1981-83), Grand Wagoneer(1984-86), Cherokee(1981-83), J-10, J-20(1981-86)
XJ=Wagoneer(1984-86), Cherokee(1984-86)

AR = Use as Required - = Non Illustrated Part P.A.R. = Paint as Required

« RETURN TO GROUP INDEX

ALTERNATOR MOUNTING 2.5L GM FOUR CYLINDER WITHOUT AMERICAN AIR
Figure 8-3800

81J08 3800

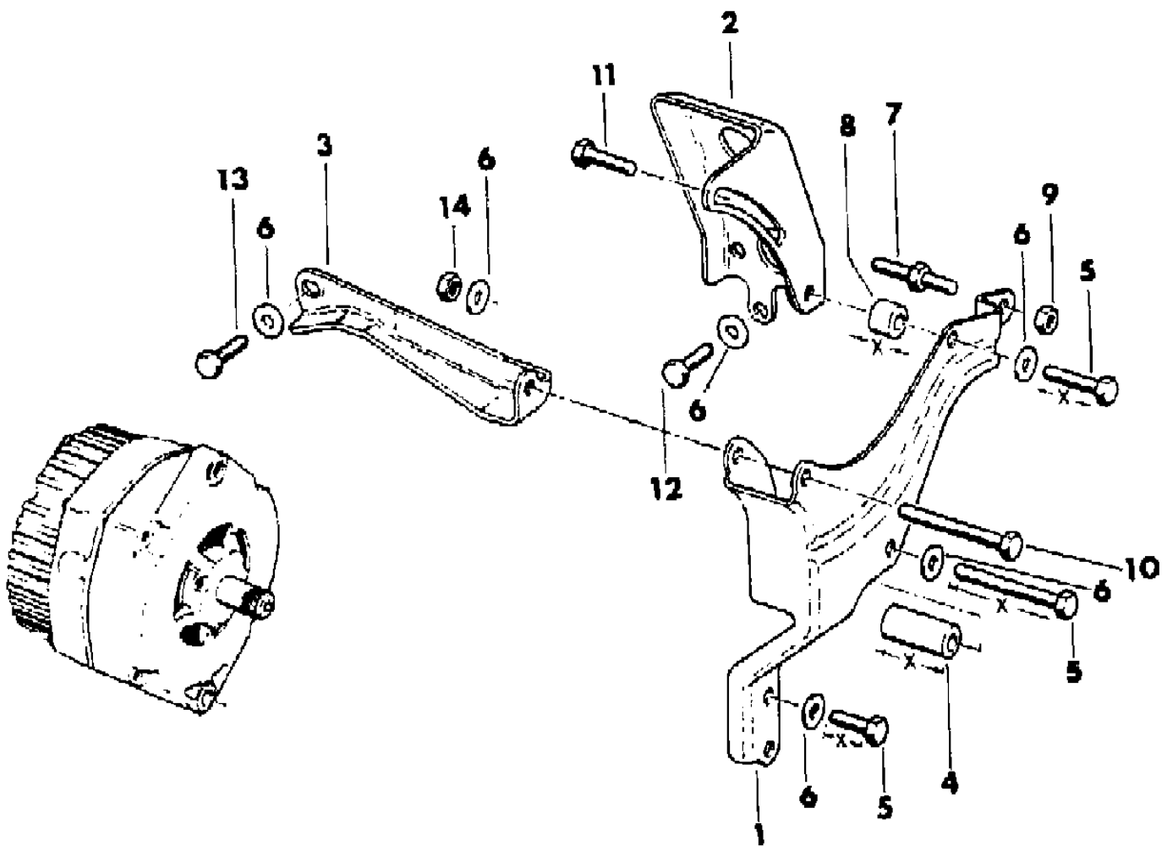

ITEM	PART NUMBER	QTY	BODY	MODEL	DESCRIPTION
1	J323 6701	1			BRACKET
2	J813 2304	1			BRACKET
3	J323 6702	1			BRACE
4	J325 1286	1			SPACER, 48.20mm
5					BOLT
	1150 2685	1			20mm
	1150 0829	1			25mm
	1150 4356	1			40mm
	1150 0832	1			45mm
	1150 4745	1			80mm
6	J420 0093	AR			WASHER
7	J813 2284	2			BOLT, Stud
8	J325 1284	1			SPACER, 16.25mm
9	1150 0424	1			NUT
10	1150 4745	1			BOLT
11	J420 0406	1			BOLT
12	1150 4595	1			BOLT
13	1150 2606	1			BOLT
14					NUT
	1150 0424	1			1981
	1150 1850	1			1982-83

MODEL CODES

16=Cherokee 2 Dr.(1981-83)
17=Cherokee 2 Dr.(1981-83)
73=Cherokee 2WD-2 Dr.(1984-86)
74=Cherokee 2WD-4 Dr.(1984-86)
18=Cherokee 4 Dr.(1981-83)
77=Cherokee 4WD-2 Dr.(1984-86)
78=Cherokee 4WD-4 Dr.(1984-86)
85=CJ-5 (1981-83)
86=CJ-6(1981)
87=CJ-7(1981-86)
88=CJ-8, Scrambler(1981-86)
64=Comanche 2WD-6 Ft. Box(1986)
66=Comanche 2WD-7 Ft. Box(1986)
63=Comanche 4WD-6 Ft. Box(1986)
65=Comanche 4WD-7 Ft. Box(1986)
15=Grand Wagoneer 4 Dr.(1984-86)
25=J-10 Truck 7 Ft. Box(1981-84)
26=J10 Truck 8 Ft. Box(1981-86)
27=J-20 Truck 8 Ft. Box(1981-86)
15=Wagoneer 4 Dr.(1981-83)
75=Wagoneer 4WD-4 Dr.(1984-86)

BODY
CJ=CJ-5, CJ-6, CJ-7, CJ-8, Scrambler(1981-86)
MJ=Comanche Pickup(1986)

STYLES
SJ=Wagoneer(1981-83), Grand Wagoneer(1984-86), Cherokee(1981-83), J-10, J-20(1981-86)
XJ=Wagoneer(1984-86), Cherokee(1984-86)

AR = Use as Required - = Non Illustrated Part P.A.R. = Paint as Required

« RETURN TO GROUP INDEX

ALTERNATOR MOUNTING 2.5L GM FOUR CYLINDER WITH AMERICAN AIR
Figure 8-3900

81J08 3900

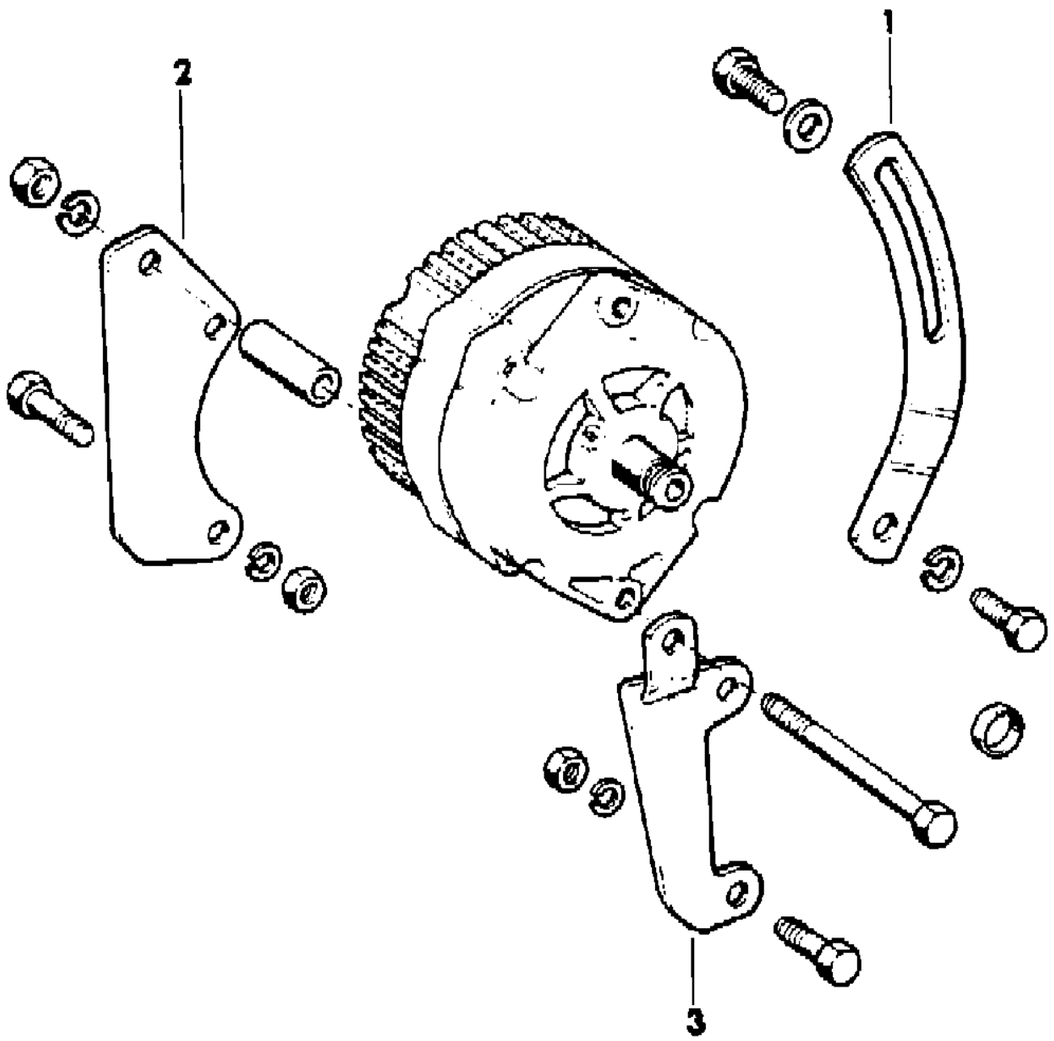

ITEM	PART NUMBER	QTY	BODY	MODEL	DESCRIPTION
1	J813 2876	1			BRACKET, Alternator Adjusting
2	J813 2875	1			BRACKET, Alternator Rear
3	J813 2874	1			BRACKET, Alternator

MODEL CODES

16=Cherokee 2 Dr.(1981-83)	78=Cherokee 4WD-4 Dr.(1984-86)	64=Comanche 2WD-6 Ft. Box(1986)	25=J-10 Truck 7 Ft. Box(1981-84)
17=Cherokee 2 Dr.(1981-83)	85=CJ-5 (1981-83)	66=Comanche 2WD-7 Ft. Box(1986)	26=J10 Truck 8 Ft. Box(1981-86)
73=Cherokee 2WD-2 Dr.(1984-86)	86=CJ-6(1981)	63=Comanche 4WD-6 Ft. Box(1986)	27=J-20 Truck 8 Ft. Box(1981-86)
74=Cherokee 2WD-4 Dr.(1984-86)	87=CJ-7(1981-86)	65=Comanche 4WD-7 Ft. Box(1986)	15=Wagoneer 4 Dr.(1981-83)
18=Cherokee 4 Dr.(1981-83)	88=CJ-8, Scrambler(1981-86)	15=Grand Wagoneer 4 Dr.(1984-86)	75=Wagoneer 4WD-4 Dr.(1984-86)
77=Cherokee 4WD-2 Dr.(1984-86)			

BODY
CJ=CJ-5, CJ-6, CJ-7, CJ-8, Scrambler(1981-86)
MJ=Comanche Pickup(1986)

STYLES
SJ=Wagoneer(1981-83), Grand Wagoneer(1984-86), Cherokee(1981-83), J-10, J-20(1981-86)
XJ=Wagoneer(1984-86), Cherokee(1984-86)

AR = Use as Required - = Non Illustrated Part P.A.R. = Paint as Required

« RETURN TO GROUP INDEX

ALTERNATOR MOUNTING 2.5L AMC FOUR CYLINDER CJ-5,6,7,8, SCRAMBLER
Figure 8-4000

81J08 4000

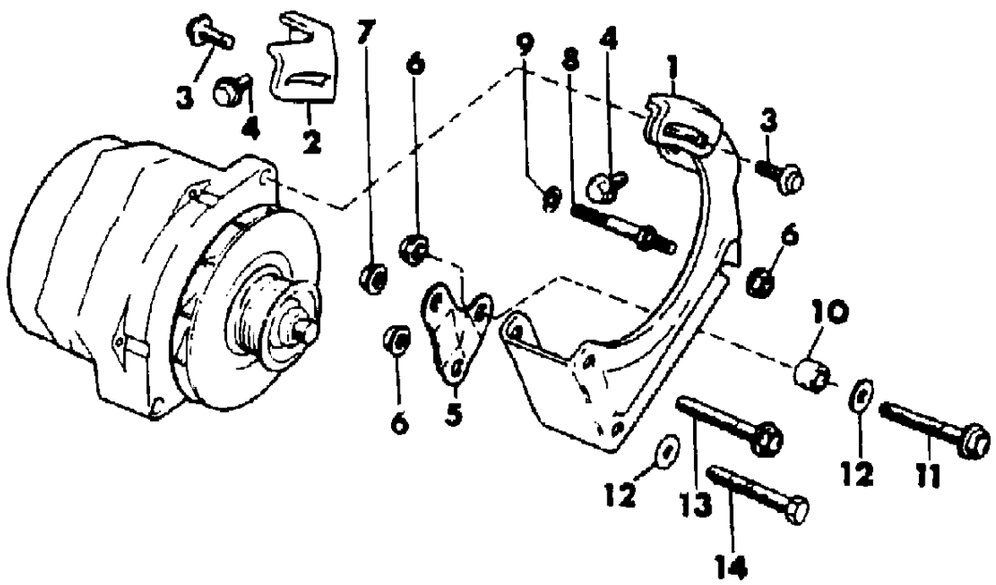

ITEM	PART NUMBER	QTY	BODY	MODEL	DESCRIPTION
1	3300 1658	1			BRACKET, Alternator
2	3300 1574	1			BRACE, Alternator
3	J941 9885	2			BOLT
4	3420 1818	2			BOLT
5	3300 1715	1			BRACKET, Alternator
6	J400 4747	3			NUT
7	1150 1850	1			NUT
8	J400 7154	1			STUD
9	J400 3803	1			WASHER
10	3420 1903	1			SPACER
11	J018 9305	1			BOLT
12	J400 1104	2			WASHER
13	1150 4745	1			BOLT
14	J018 9303	1			BOLT

MODEL CODES

16=Cherokee 2 Dr.(1981-83)
17=Cherokee 2 Dr.(1981-83)
73=Cherokee 2WD-2 Dr.(1984-86)
74=Cherokee 2WD-4 Dr.(1984-86)
18=Cherokee 4 Dr.(1981-83)
77=Cherokee 4WD-2 Dr.(1984-86)
78=Cherokee 4WD-4 Dr.(1984-86)
85=CJ-5 (1981-83)
86=CJ-6(1981)
87=CJ-7(1981-86)
88=CJ-8, Scrambler(1981-86)
64=Comanche 2WD-6 Ft. Box(1986)
66=Comanche 2WD-7 Ft. Box(1986)
63=Comanche 4WD-6 Ft. Box(1986)
65=Comanche 4WD-7 Ft. Box(1986)
15=Grand Wagoneer 4 Dr.(1984-86)
25=J-10 Truck 7 Ft. Box(1981-84)
26=J10 Truck 8 Ft. Box(1981-86)
27=J-20 Truck 8 Ft. Box(1981-86)
15=Wagoneer 4 Dr.(1981-83)
75=Wagoneer 4WD-4 Dr.(1984-86)

BODY
CJ=CJ-5, CJ-6, CJ-7, CJ-8, Scrambler(1981-86)
MJ=Comanche Pickup(1986)

STYLES
SJ=Wagoneer(1981-83), Grand Wagoneer(1984-86), Cherokee(1981-83), J-10, J-20(1981-86)
XJ=Wagoneer(1984-86), Cherokee(1984-86)

AR = Use as Required - = Non Illustrated Part P.A.R. = Paint as Required

« RETURN TO GROUP INDEX

ALTERNATOR MOUNTING 4.2L SIX CYLINDER CJ-5,6,7,8, SCRAMBLER
Figure 8-4100

81J08 4100

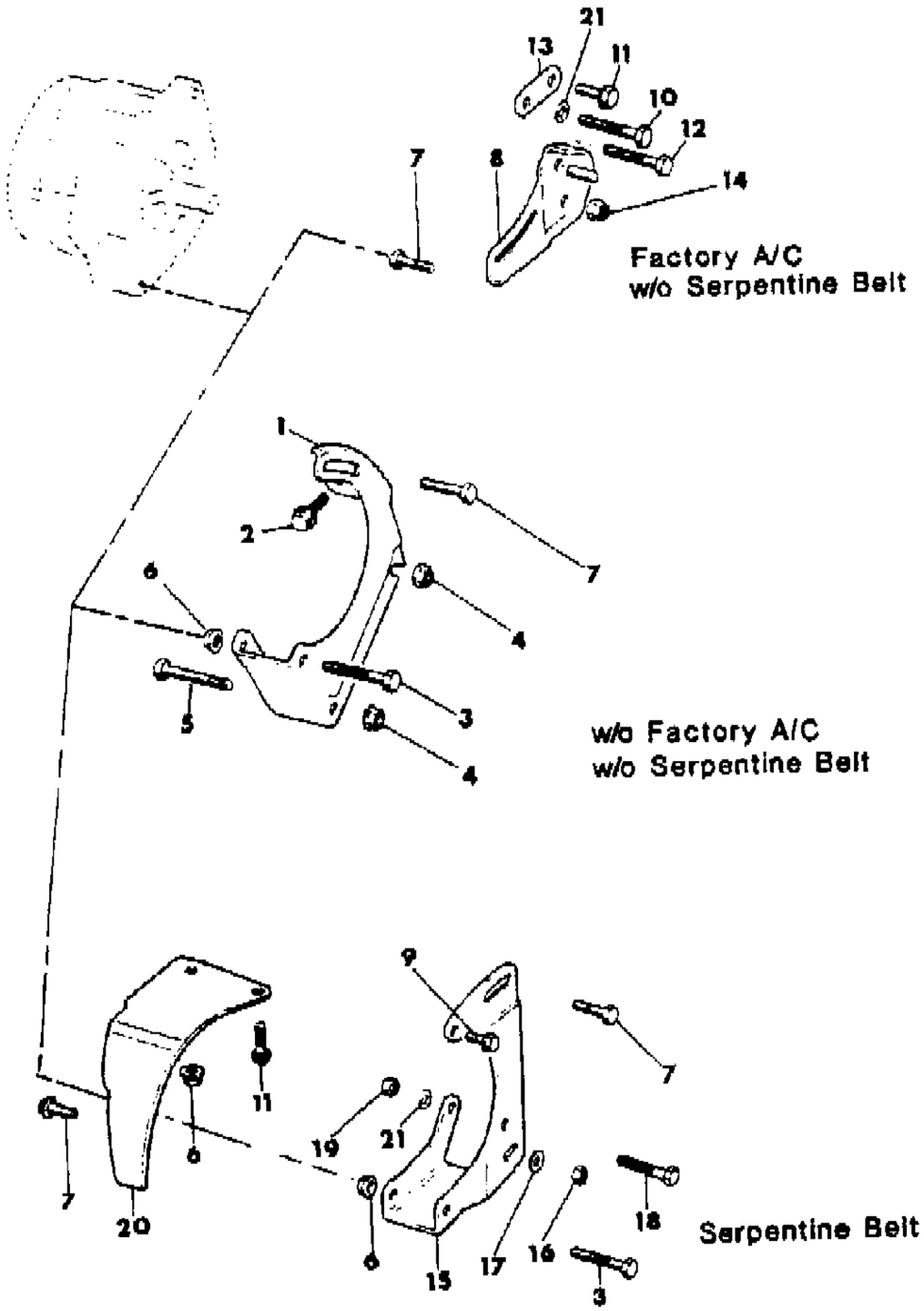

ITEM	PART NUMBER	QTY	BODY	MODEL	DESCRIPTION
1					BRACKET, Alternator
	J322 7417	1			42,56,63 or 78 Amp
	J323 7576	1			70 or 85 Amp
2					SCREW
	J027 4882	1			.62"
	J027 4474	1			1.12"
3	1150 0835	1			BOLT
4	J400 3909	2			NUT
5	J018 0137	1			BOLT
6	1150 1850	1			NUT
7	3420 1818	1			BOLT
8					BRACKET, Alternator
	J323 6310	1			42,56,63 or 78 Amp
	J323 9655	1			70 or 85 Amp
9	J018 0123	1			BOLT
10	J018 9303	1			BOLT
11	J400 6995	1			BOLT
12	J018 0137	1			BOLT
13	J323 0381	1			STRAP
14	J400 3909	1			NUT
15					BRACKET, Alternator
	J322 4477	1			56,63,66 or 78 Amp
	J323 7577	1			70 Amp
16	J941 3534	1			NUT
17	J400 1104	1			WASHER
18	J018 0138	1			BOLT
19	J400 3909	1			NUT
20					BRACE, Alternator
	J323 8456	1			1981-82
	J323 8456	1			1983-86: 56,63,66 or 78 Amp
	J323 7580	1			1983-86: 70 Amp
	J323 8456	1			Japan
21	J400 3803	1			WASHER

MODEL CODES
16=Cherokee 2 Dr.(1981-83)
17=Cherokee 2 Dr.(1981-83)
73=Cherokee 2WD-2 Dr.(1984-86)
74=Cherokee 2WD-4 Dr.(1984-86)
18=Cherokee 4 Dr.(1981-83)
77=Cherokee 4WD-2 Dr.(1984-86)
78=Cherokee 4WD-4 Dr.(1984-86)
85=CJ-5 (1981-83)
86=CJ-6(1981)
87=CJ-7(1981-86)
88=CJ-8, Scrambler(1981-86)
64=Comanche 2WD-6 Ft. Box(1986)
66=Comanche 2WD-7 Ft. Box(1986)
63=Comanche 4WD-6 Ft. Box(1986)
65=Comanche 4WD-7 Ft. Box(1986)
15=Grand Wagoneer 4 Dr.(1984-86)
25=J-10 Truck 7 Ft. Box(1981-84)
26=J10 Truck 8 Ft. Box(1981-86)
27=J-20 Truck 8 Ft. Box(1981-86)
15=Wagoneer 4 Dr.(1981-83)
75=Wagoneer 4WD-4 Dr.(1984-86)

BODY
CJ=CJ-5, CJ-6, CJ-7, CJ-8, Scrambler(1981-86)
MJ=Comanche Pickup(1986)

STYLES
SJ=Wagoneer(1981-83), Grand Wagoneer(1984-86), Cherokee(1981-83), J-10, J-20(1981-86)
XJ=Wagoneer(1984-86), Cherokee(1984-86)

AR = Use as Required - = Non Illustrated Part P.A.R. = Paint as Required

« RETURN TO GROUP INDEX

ALTERNATOR MOUNTING 5.9L EIGHT CYLINDER CJ-5,6,7,8, SCRAMBLER
Figure 8-4200

81J08 4200

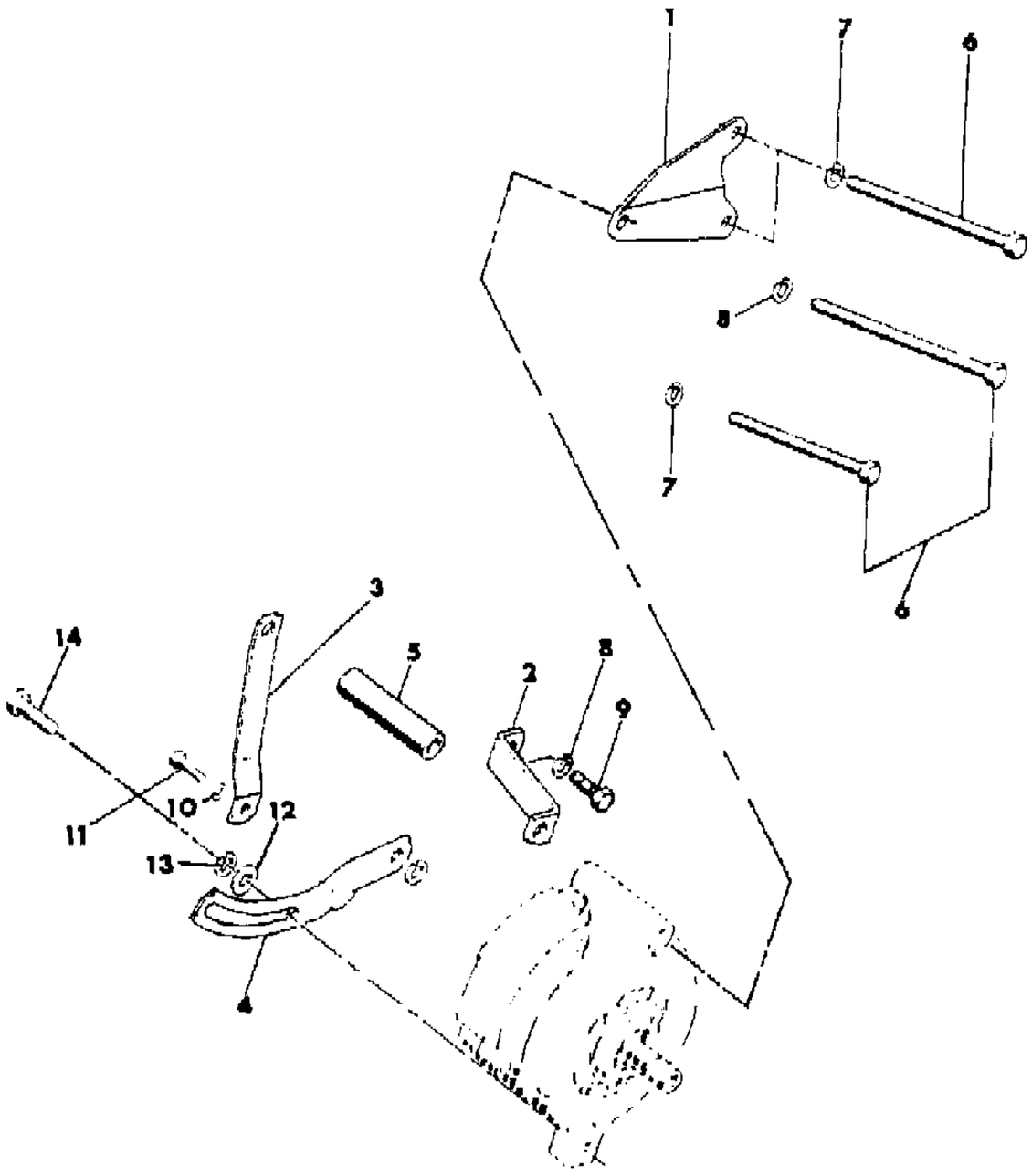

ITEM	PART NUMBER	QTY	BODY	MODEL	DESCRIPTION
1					BRACKET
	J322 7682	1			w/Factory A/C
	J322 7676	1			w/o Factory A/C
2					BRACKET, Alternator
	J535 9301	1			w/Factory A/C
	J535 9302	1			w/o Factory A/C
3					SUPPORT, Alternator
	J535 9300	1			Tagged 1105080, 1105082 or 1101484
	J536 4256	1			Tagged 1105084 or 1105346
4					BRACKET, Adjusting
	J535 7906	1			Tagged 1105080, 1105082 or 1101484
	J536 2172	1			Tagged 1105084, 1105346
5					SPACER
	J400 6186	1			3.44"
	J400 6822	1			3.56"
6					BOLT
	J018 0122	1			1.00"
	S027 4101	1			4.88"
	J019 2406	1			5.25"
	J021 5511	1			5.75"
	J400 6031	1			6.50"
7	J400 3803	1			WASHER
8	J400 4807	1			WASHER
9	J018 0120	1			BOLT
10	1150 0221	1			WASHER
11	1150 1939	1			BOLT
12	J400 1095	1			WASHER
13	J012 0214	1			WASHER
14					BOLT
	J018 0079	1			.31"
	J420 0406	1			8mm
	J420 0419	1			10mm

MODEL CODES

16=Cherokee 2 Dr.(1981-83)
17=Cherokee 2 Dr.(1981-83)
73=Cherokee 2WD-2 Dr.(1984-86)
74=Cherokee 2WD-4 Dr.(1984-86)
18=Cherokee 4 Dr.(1981-83)
77=Cherokee 4WD-2 Dr.(1984-86)
78=Cherokee 4WD-4 Dr.(1984-86)
85=CJ-5 (1981-83)
86=CJ-6(1981)
87=CJ-7(1981-86)
88=CJ-8, Scrambler(1981-86)
64=Comanche 2WD-6 Ft. Box(1986)
66=Comanche 2WD-7 Ft. Box(1986)
63=Comanche 4WD-6 Ft. Box(1986)
65=Comanche 4WD-7 Ft. Box(1986)
15=Grand Wagoneer 4 Dr.(1984-86)
25=J-10 Truck 7 Ft. Box(1981-84)
26=J10 Truck 8 Ft. Box(1981-86)
27=J-20 Truck 8 Ft. Box(1981-86)
15=Wagoneer 4 Dr.(1981-83)
75=Wagoneer 4WD-4 Dr.(1984-86)

BODY
CJ=CJ-5, CJ-6, CJ-7, CJ-8, Scrambler(1981-86)
MJ=Comanche Pickup(1986)

STYLES
SJ=Wagoneer(1981-83), Grand Wagoneer(1984-86), Cherokee(1981-83), J-10, J-20(1981-86)
XJ=Wagoneer(1984-86), Cherokee(1984-86)

AR = Use as Required - = Non Illustrated Part P.A.R. = Paint as Required

« RETURN TO GROUP INDEX

ALTERNATOR MOUNTING 1981-85 ISUZU DIESEL CJ-5,6,7,8, SCRAMBLER
Figure 8-4300

81J08 4300

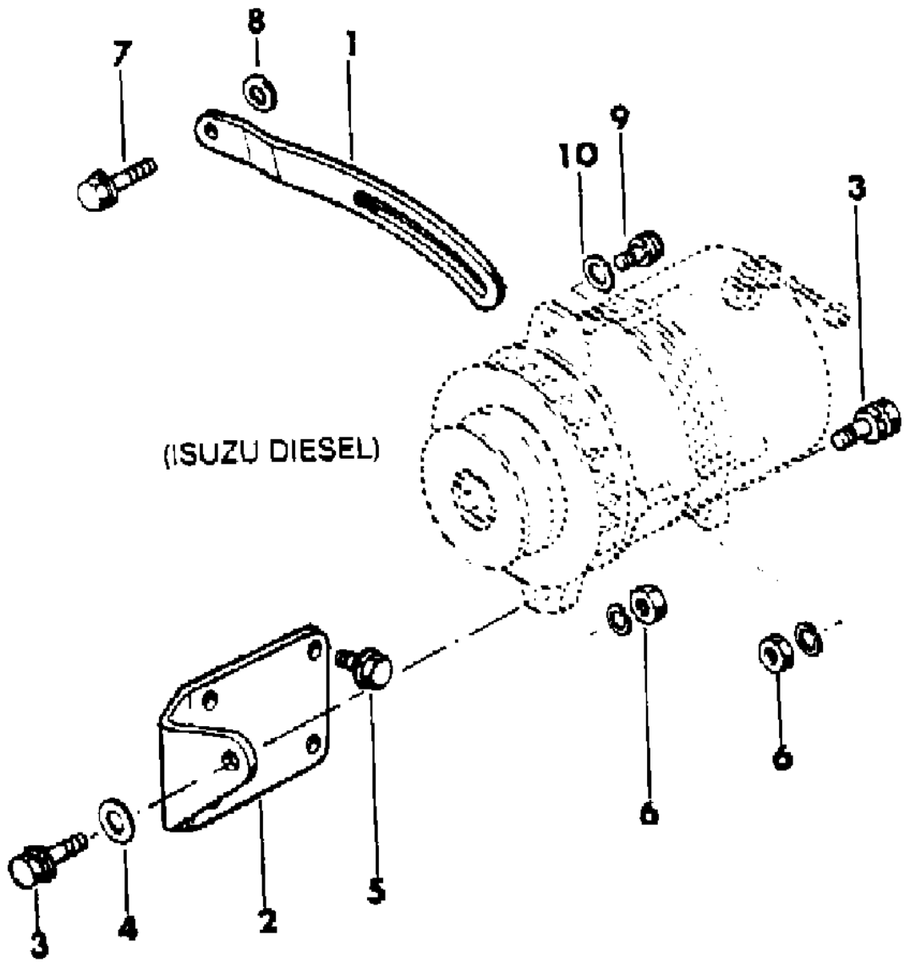

ITEM	PART NUMBER	QTY	BODY	MODEL	DESCRIPTION
1	J806 0291	1			BRACKET
2	J806 0415	1			BRACKET
3	J806 0030	2			BOLT
4	J806 0065	1			WASHER
5	J806 0021	4			BOLT
6	J806 0060	2			NUT
7	J806 0051	1			BOLT
8	J806 0131	1			WASHER
9	J806 0019	1			BOLT
10	J806 0078	1			WASHER

MODEL CODES
16=Cherokee 2 Dr.(1981-83)
17=Cherokee 2 Dr.(1981-83)
73=Cherokee 2WD-2 Dr.(1984-86)
74=Cherokee 2WD-4 Dr.(1984-86)
18=Cherokee 4 Dr.(1981-83)
77=Cherokee 4WD-2 Dr.(1984-86)
78=Cherokee 4WD-4 Dr.(1984-86)
85=CJ-5 (1981-83)
86=CJ-6(1981)
87=CJ-7(1981-86)
88=CJ-8, Scrambler(1981-86)
64=Comanche 2WD-6 Ft. Box(1986)
66=Comanche 2WD-7 Ft. Box(1986)
63=Comanche 4WD-6 Ft. Box(1986)
65=Comanche 4WD-7 Ft. Box(1986)
15=Grand Wagoneer 4 Dr.(1984-86)
25=J-10 Truck 7 Ft. Box(1981-84)
26=J10 Truck 8 Ft. Box(1981-86)
27=J-20 Truck 8 Ft. Box(1981-86)
15=Wagoneer 4 Dr.(1981-83)
75=Wagoneer 4WD-4 Dr.(1984-86)

BODY
CJ=CJ-5, CJ-6, CJ-7, CJ-8, Scrambler(1981-86)
MJ=Comanche Pickup(1986)

STYLES
SJ=Wagoneer(1981-83), Grand Wagoneer(1984-86), Cherokee(1981-83), J-10, J-20(1981-86)
XJ=Wagoneer(1984-86), Cherokee(1984-86)

AR = Use as Required - = Non Illustrated Part P.A.R. = Paint as Required

« RETURN TO GROUP INDEX

ALTERNATOR MOUNTING 1986 ISUZU DIESEL CJ-5,6,7,8, SCRAMBLER
Figure 8-4400

81J08 4400

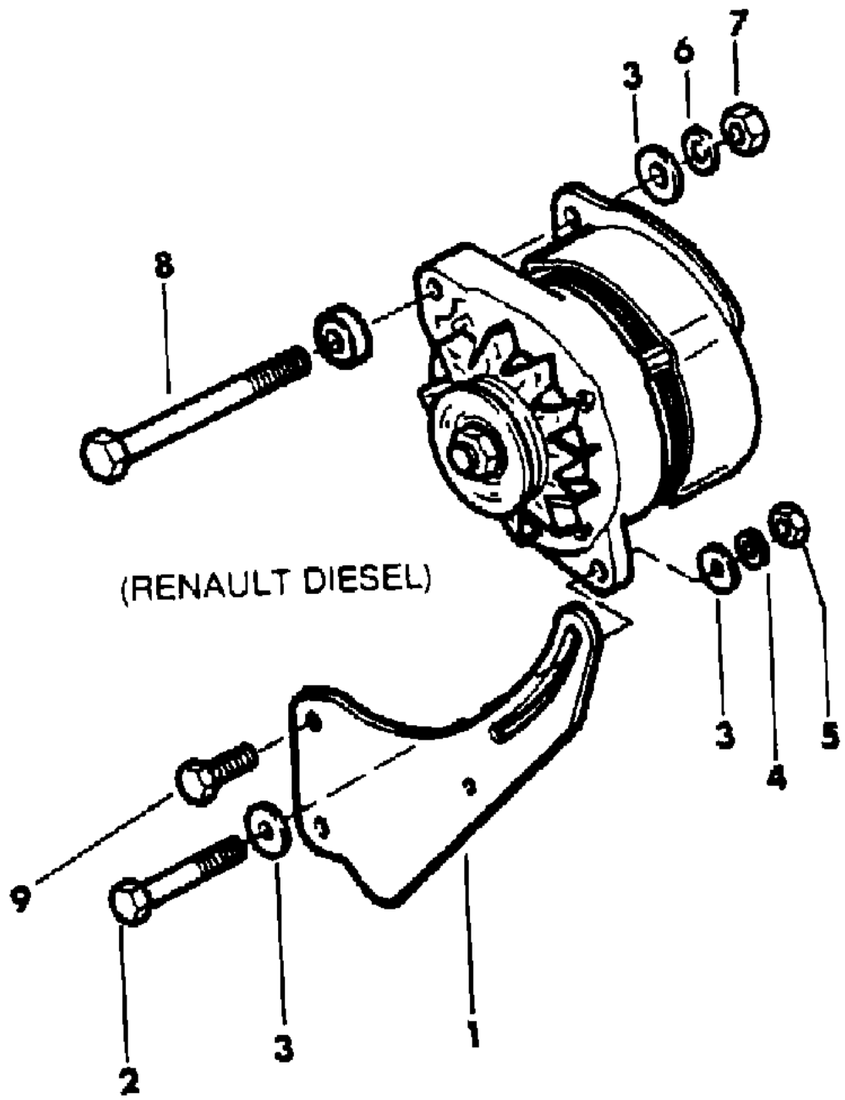

ITEM	PART NUMBER	QTY	BODY	MODEL	DESCRIPTION
1	T069 4002	1			BRACKET
1	T300 1634	1			BOLT
3	T305 3361	3			WASHER
4	T140 2092	1			WASHER
5	T140 5674	1			NUT
6	T140 2094	1			WASHER
7	T140 5676	1			NUT
8	T063 7598	1			BOLT
9	T300 1183	1			BOLT

MODEL CODES

16=Cherokee 2 Dr.(1981-83)
17=Cherokee 2 Dr.(1981-83)
73=Cherokee 2WD-2 Dr.(1984-86)
74=Cherokee 2WD-4 Dr.(1984-86)
18=Cherokee 4 Dr.(1981-83)
77=Cherokee 4WD-2 Dr.(1984-86)
78=Cherokee 4WD-4 Dr.(1984-86)
85=CJ-5 (1981-83)
86=CJ-6(1981)
87=CJ-7(1981-86)
88=CJ-8, Scrambler(1981-86)
64=Comanche 2WD-6 Ft. Box(1986)
66=Comanche 2WD-7 Ft. Box(1986)
63=Comanche 4WD-6 Ft. Box(1986)
65=Comanche 4WD-7 Ft. Box(1986)
15=Grand Wagoneer 4 Dr.(1984-86)
25=J-10 Truck 7 Ft. Box(1981-84)
26=J10 Truck 8 Ft. Box(1981-86)
27=J-20 Truck 8 Ft. Box(1981-86)
15=Wagoneer 4 Dr.(1981-83)
75=Wagoneer 4WD-4 Dr.(1984-86)

BODY
CJ=CJ-5, CJ-6, CJ-7, CJ-8, Scrambler(1981-86)
MJ=Comanche Pickup(1986)

STYLES
SJ=Wagoneer(1981-83), Grand Wagoneer(1984-86), Cherokee(1981-83), J-10, J-20(1981-86)
XJ=Wagoneer(1984-86), Cherokee(1984-86)

AR = Use as Required - = Non Illustrated Part P.A.R. = Paint as Required

« RETURN TO GROUP INDEX

ALTERNATOR 2.5L FOUR AND 2.8L SIX CYLINDER XJ CHEROKEE, XJ WAGONEER, COMANCHE
Figure 8-4500

81J08 4500

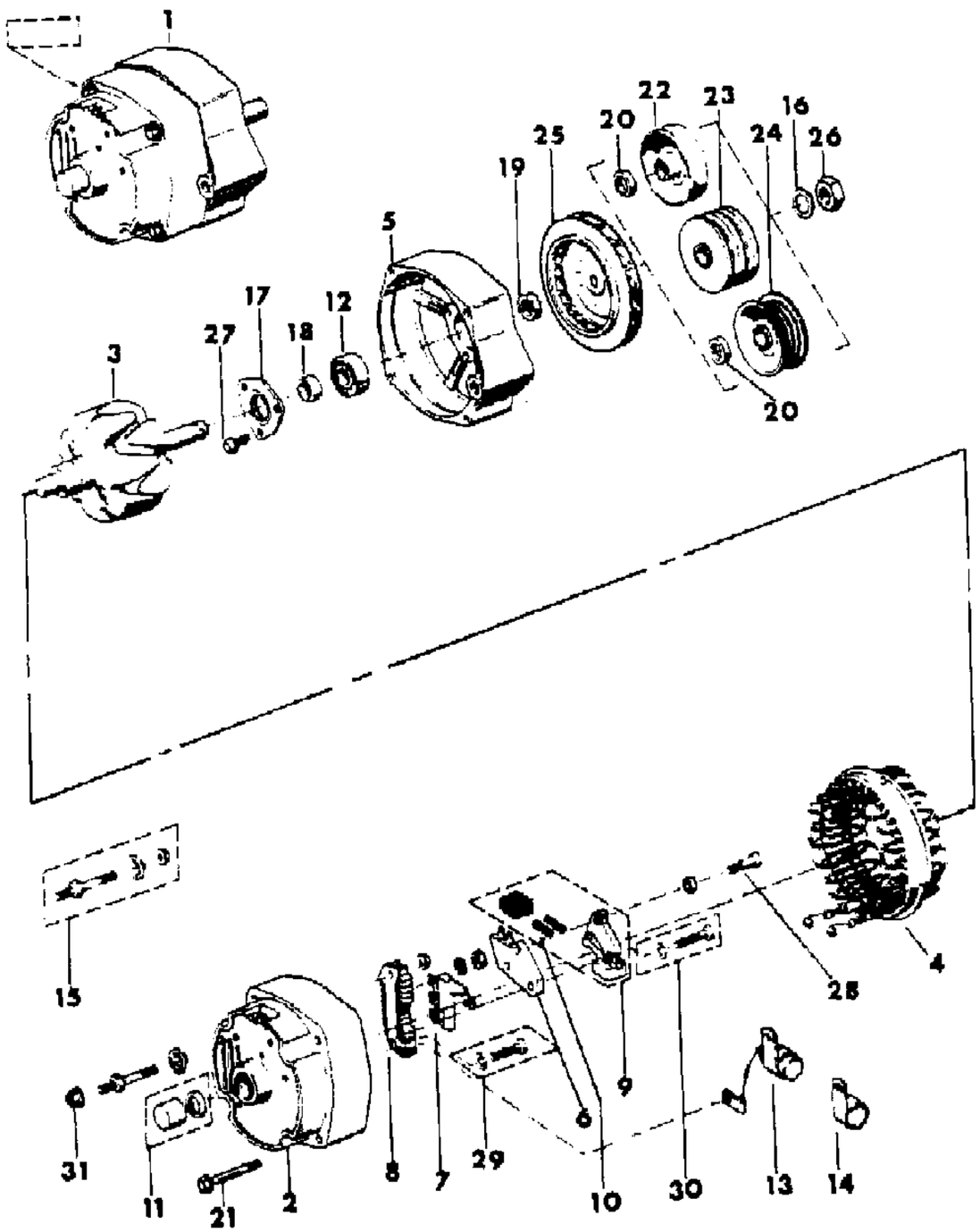

ITEM	PART NUMBER	QTY	BODY	MODEL	DESCRIPTION
1					ALTERNATOR ASSEMBLY, 56,66 or 78 Amp
	JR77 5005	1			Remanufactured
	J813 4664	1			EXPORT
2	J813 4651	1			HOUSING, Rear
3					ROTOR, Alternator
	J813 4645	1			Tagged 1105044,1105045,1105047,1105048,1105058 or 1105059
	J813 4646	1			Tagged 1105046,1105049,1105060, or 1105372
4					STATOR, Alternator
	J813 4648	1			Tagged 1105044,1105047, or 1105058
	J813 4649	1			Tagged 1105045,1105046,1105048,1105049,1105059, 1105060, or 1105372
5	J813 4655	1			HOUSING, Front
6	J812 5176	1			REGULATOR, Voltage
7	J813 3268	1			DIODE TRIO ***
8	J813 4650	1			RECTIFIER, Diode
9	J813 4652	1			HOLDER, Brush
10	J813 4653	2			SPRING
11	J813 4644	1			BEARING
12	J813 4657	1			BEARING
13	J812 5183	1			CAPACITOR, Alternator
14	J812 5184	1			CLAMP
15	J813 3274	1			TERMINAL
16	J813 3280	1			WASHER
17	J813 4658	1			RETAINER
18	J813 3279	1			COLLAR
19	J813 4659	1			COLLAR
20					COLLAR
	J813 3299	1			Four Cylinder
21	J812 5191	4			BOLT
22					PULLEY, Alternator
	J813 2698	1			Four Cylinder w/o Serpentine Belt Drive
23					PULLEY, Alternator
	8350 0433	1			Six Cylinder
24					PULLEY, Alternator
	J813 4194	1			Four Cylinder w/Serpentine Belt Drive
25	J813 4662	1			FAN, Alternator
26	J812 5242	1			NUT
27	J813 4668	3			SCREW

MODEL CODES

16=Cherokee 2 Dr.(1981-83)
17=Cherokee 2 Dr.(1981-83)
73=Cherokee 2WD-2 Dr.(1984-86)
74=Cherokee 2WD-4 Dr.(1984-86)
18=Cherokee 4 Dr.(1981-83)
77=Cherokee 4WD-2 Dr.(1984-86)
78=Cherokee 4WD-4 Dr.(1984-86)
85=CJ-5 (1981-83)
86=CJ-6(1981)
87=CJ-7(1981-86)
88=CJ-8, Scrambler(1981-86)
64=Comanche 2WD-6 Ft. Box(1986)
66=Comanche 2WD-7 Ft. Box(1986)
63=Comanche 4WD-6 Ft. Box(1986)
65=Comanche 4WD-7 Ft. Box(1986)
15=Grand Wagoneer 4 Dr.(1984-86)
25=J-10 Truck 7 Ft. Box(1981-84)
26=J10 Truck 8 Ft. Box(1981-86)
27=J-20 Truck 8 Ft. Box(1981-86)
15=Wagoneer 4 Dr.(1981-83)
75=Wagoneer 4WD-4 Dr.(1984-86)

BODY
CJ=CJ-5, CJ-6, CJ-7, CJ-8, Scrambler(1981-86)
MJ=Comanche Pickup(1986)

STYLES
SJ=Wagoneer(1981-83), Grand Wagoneer(1984-86), Cherokee(1981-83), J-10, J-20(1981-86)
XJ=Wagoneer(1984-86), Cherokee(1984-86)

AR = Use as Required - = Non Illustrated Part P.A.R. = Paint as Required

« RETURN TO GROUP INDEX »

ALTERNATOR 2.5L FOUR AND 2.8L SIX CYLINDER XJ CHEROKEE, XJ WAGONEER, COMANCHE
Figure 8-4500

81J08 4500

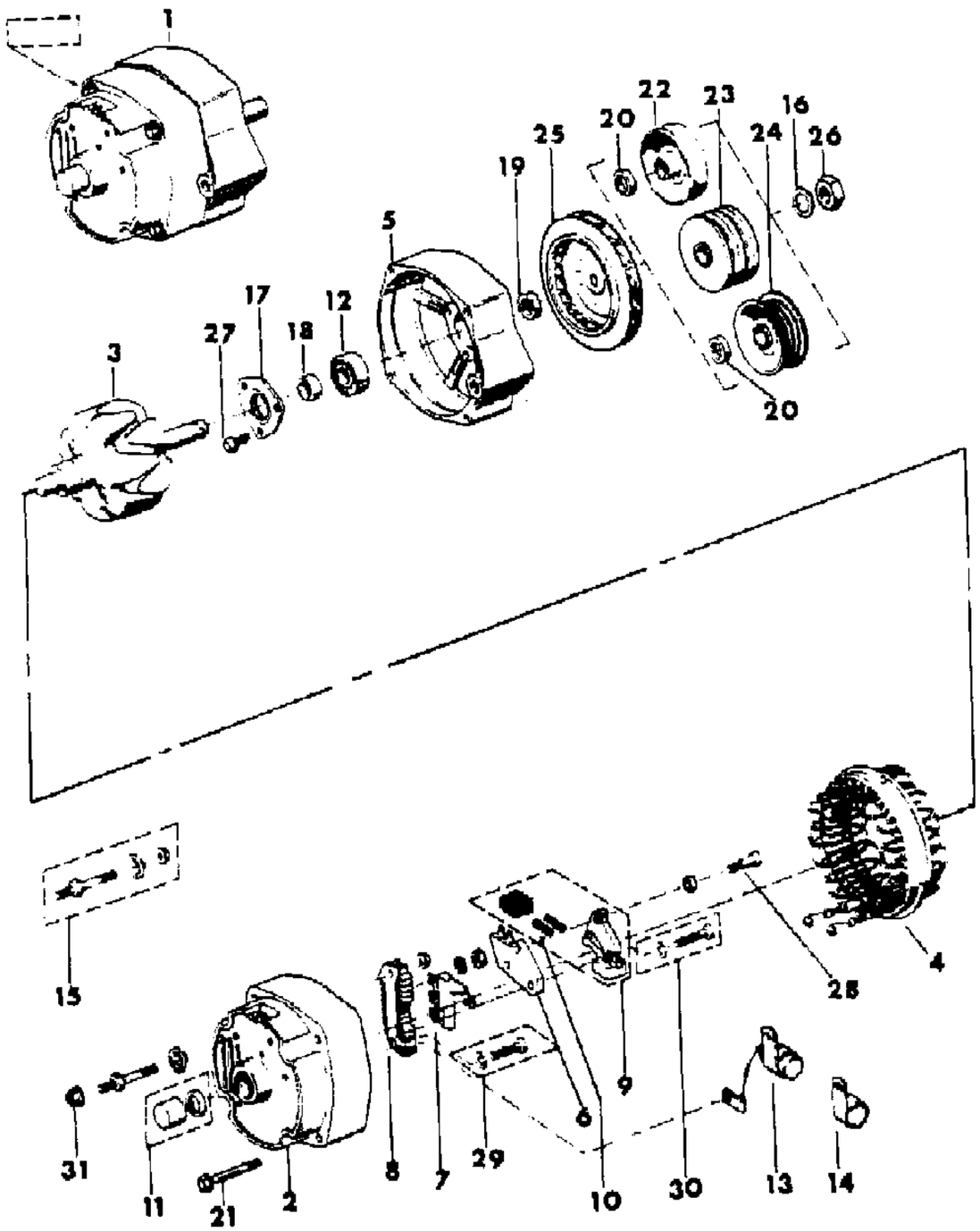

ITEM	PART NUMBER	QTY	BODY	MODEL	DESCRIPTION
28	J812 5244	2			SCREW
29	J813 4669	1			SCREW
30	J813 3273	1			SCREW
31	J420 0453	1			NUT

MODEL CODES

16=Cherokee 2 Dr.(1981-83)
17=Cherokee 2 Dr.(1981-83)
73=Cherokee 2WD-2 Dr.(1984-86)
74=Cherokee 2WD-4 Dr.(1984-86)
18=Cherokee 4 Dr.(1981-83)
77=Cherokee 4WD-2 Dr.(1984-86)
78=Cherokee 4WD-4 Dr.(1984-86)
85=CJ-5 (1981-83)
86=CJ-6(1981)
87=CJ-7(1981-86)
88=CJ-8, Scrambler(1981-86)
64=Comanche 2WD-6 Ft. Box(1986)
66=Comanche 2WD-7 Ft. Box(1986)
63=Comanche 4WD-6 Ft. Box(1986)
65=Comanche 4WD-7 Ft. Box(1986)
15=Grand Wagoneer 4 Dr.(1984-86)
25=J-10 Truck 7 Ft. Box(1981-84)
26=J10 Truck 8 Ft. Box(1981-86)
27=J-20 Truck 8 Ft. Box(1981-86)
15=Wagoneer 4 Dr.(1981-83)
75=Wagoneer 4WD-4 Dr.(1984-86)

BODY
CJ=CJ-5, CJ-6, CJ-7, CJ-8, Scrambler(1981-86)
MJ=Comanche Pickup(1986)

STYLES
SJ=Wagoneer(1981-83), Grand Wagoneer(1984-86), Cherokee(1981-83), J-10, J-20(1981-86)
XJ=Wagoneer(1984-86), Cherokee(1984-86)

AR = Use as Required - = Non Illustrated Part P.A.R. = Paint as Required

« RETURN TO GROUP INDEX

ALTERNATOR--60 AMP 2.1L DIESEL XJ CHEROKEE, XJ WAGONEER, COMANCHE
Figure 8-4600

81J08 4600

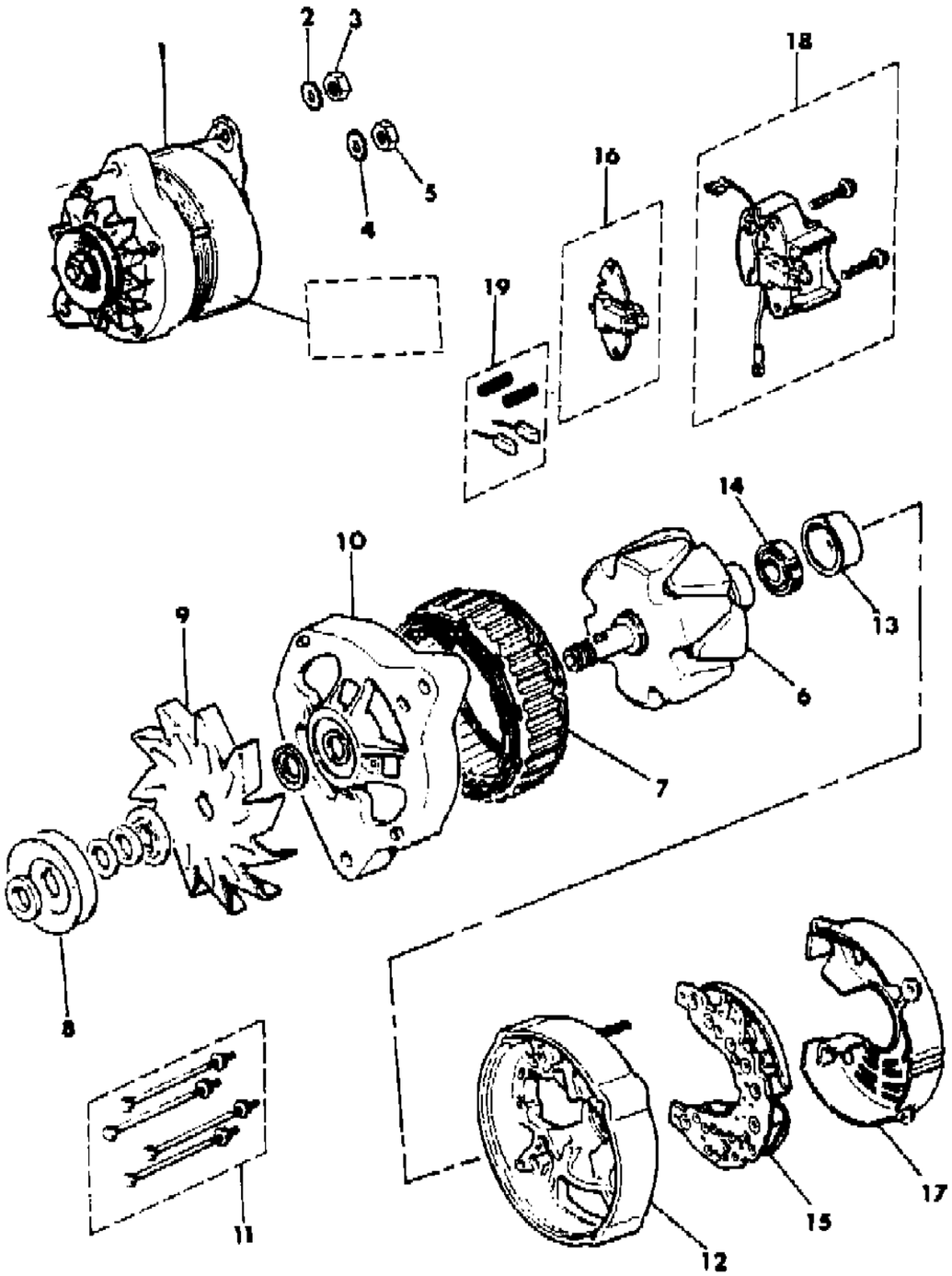

ITEM	PART NUMBER	QTY	BODY	MODEL	DESCRIPTION
1					ALTERNATOR ASSEMBLY
	JR77 5028	1			Remanufactured
					EXPORT
	5300 1762	1			Tagged A13N107
	5300 2267	1			Tagged A13N117
2	J305 6008	1			WASHER
3	3420 1169	1			NUT
4	J305 6005	1			WASHER
5	J303 2006	1			NUT
6	8350 2028	1			ROTOR
7	8350 1991	1			STATOR
8	8350 2017	1			PULLEY
9	8350 1993	1			FAN, Alternator
10	8350 2018	1			HOUSING, Front
11	8350 1995	1			BOLT, Package
12	8350 2019	1			HOUSING, Rear
13	8350 1997	1			CAP
14	8350 1998	1			BEARING
15	8350 2029	1			RECTIFIER
16	8350 2030	1			HOLDER, Brush
17	8350 2002	1			COVER
18					REGULATOR, Voltage
	8350 2003	1			Tagged A13N107
19	8350 2021	1			BRUSH PACKAGE ***

MODEL CODES

16=Cherokee 2 Dr.(1981-83)
17=Cherokee 2 Dr.(1981-83)
73=Cherokee 2WD-2 Dr.(1984-86)
74=Cherokee 2WD-4 Dr.(1984-86)
18=Cherokee 4 Dr.(1981-83)
77=Cherokee 4WD-2 Dr.(1984-86)
78=Cherokee 4WD-4 Dr.(1984-86)
85=CJ-5 (1981-83)
86=CJ-6(1981)
87=CJ-7(1981-86)
88=CJ-8, Scrambler(1981-86)
64=Comanche 2WD-6 Ft. Box(1986)
66=Comanche 2WD-7 Ft. Box(1986)
63=Comanche 4WD-6 Ft. Box(1986)
65=Comanche 4WD-7 Ft. Box(1986)
15=Grand Wagoneer 4 Dr.(1984-86)
25=J-10 Truck 7 Ft. Box(1981-84)
26=J10 Truck 8 Ft. Box(1981-86)
27=J-20 Truck 8 Ft. Box(1981-86)
15=Wagoneer 4 Dr.(1981-83)
75=Wagoneer 4WD-4 Dr.(1984-86)

BODY
CJ=CJ-5, CJ-6, CJ-7, CJ-8, Scrambler(1981-86)
MJ=Comanche Pickup(1986)

STYLES
SJ=Wagoneer(1981-83), Grand Wagoneer(1984-86), Cherokee(1981-83), J-10, J-20(1981-86)
XJ=Wagoneer(1984-86), Cherokee(1984-86)

AR = Use as Required - = Non Illustrated Part P.A.R. = Paint as Required

« RETURN TO GROUP INDEX

ALTERNATOR--70 AMP 2.1L DIESEL XJ CHEROKEE, XJ WAGONEER, COMANCHE
Figure 8-4700

81J08 4700

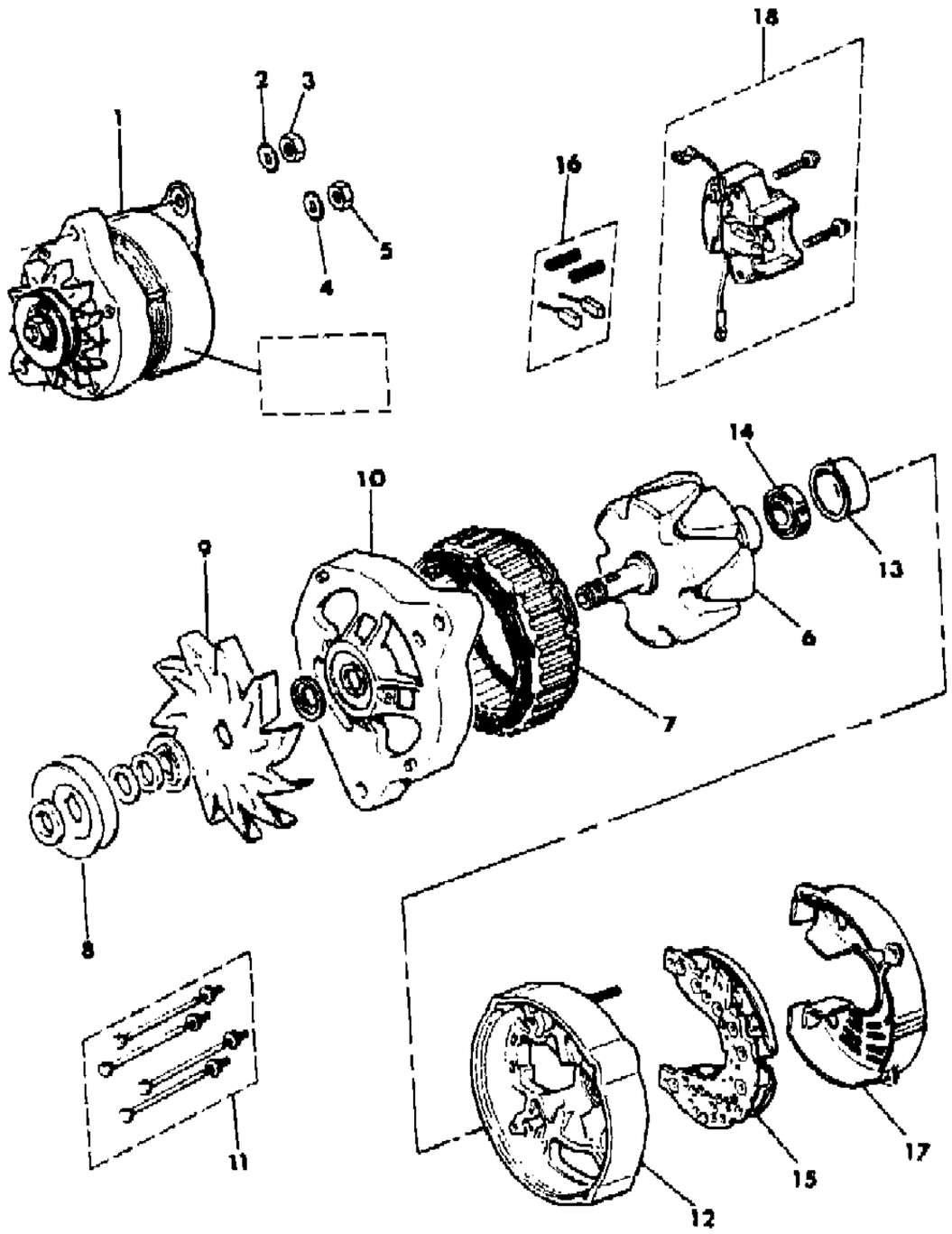

ITEM	PART NUMBER	QTY	BODY	MODEL	DESCRIPTION
1					ALTERNATOR ASSEMBLY
	JR77 5029	1			Remanufactured
	5300 1764	1			EXPORT
2	J305 6008	1			WASHER
3	3420 1169	1			NUT
4	J305 6005	1			WASHER
5	J303 2006	1			NUT
6	8350 2015	1			ROTOR
7	8350 2016	1			STATOR
8	8350 2017	1			PULLEY
9	8350 1993	1			FAN, Alternator
10	8350 2018	1			HOUSING, Front
11	8350 1995	1			BOLT PACKAGE ***
12	8350 2019	1			HOUSING, Rear
13	8350 1997	1			CAP
14	8350 1998	1			BEARING
15	8350 2020	1			RECTIFIER
16	8350 2021	1			BRUSH PACKAGE ***
17	8350 2002	1			COVER
18	8350 2023	1			REGULATOR, Voltage

MODEL CODES

16=Cherokee 2 Dr.(1981-83)
17=Cherokee 2 Dr.(1981-83)
73=Cherokee 2WD-2 Dr.(1984-86)
74=Cherokee 2WD-4 Dr.(1984-86)
18=Cherokee 4 Dr.(1981-83)
77=Cherokee 4WD-2 Dr.(1984-86)
78=Cherokee 4WD-4 Dr.(1984-86)
85=CJ-5 (1981-83)
86=CJ-6(1981)
87=CJ-7(1981-86)
88=CJ-8, Scrambler(1981-86)
64=Comanche 2WD-6 Ft. Box(1986)
66=Comanche 2WD-7 Ft. Box(1986)
63=Comanche 4WD-6 Ft. Box(1986)
65=Comanche 4WD-7 Ft. Box(1986)
15=Grand Wagoneer 4 Dr.(1984-86)
25=J-10 Truck 7 Ft. Box(1981-84)
26=J10 Truck 8 Ft. Box(1981-86)
27=J-20 Truck 8 Ft. Box(1981-86)
15=Wagoneer 4 Dr.(1981-83)
75=Wagoneer 4WD-4 Dr.(1984-86)

BODY

CJ=CJ-5, CJ-6, CJ-7, CJ-8, Scrambler(1981-86)
MJ=Comanche Pickup(1986)

STYLES

SJ=Wagoneer(1981-83), Grand Wagoneer(1984-86), Cherokee(1981-83), J-10, J-20(1981-86)
XJ=Wagoneer(1984-86), Cherokee(1984-86)

AR = Use as Required - = Non Illustrated Part P.A.R. = Paint as Required

« RETURN TO GROUP INDEX

ALTERNATOR MOUNTING FOUR CYLINDER WITHOUT AMERICAN AIR XJ CHEROKEE, XJ WAGONEER, COMANCHE
Figure 8-4800

81J08 4800

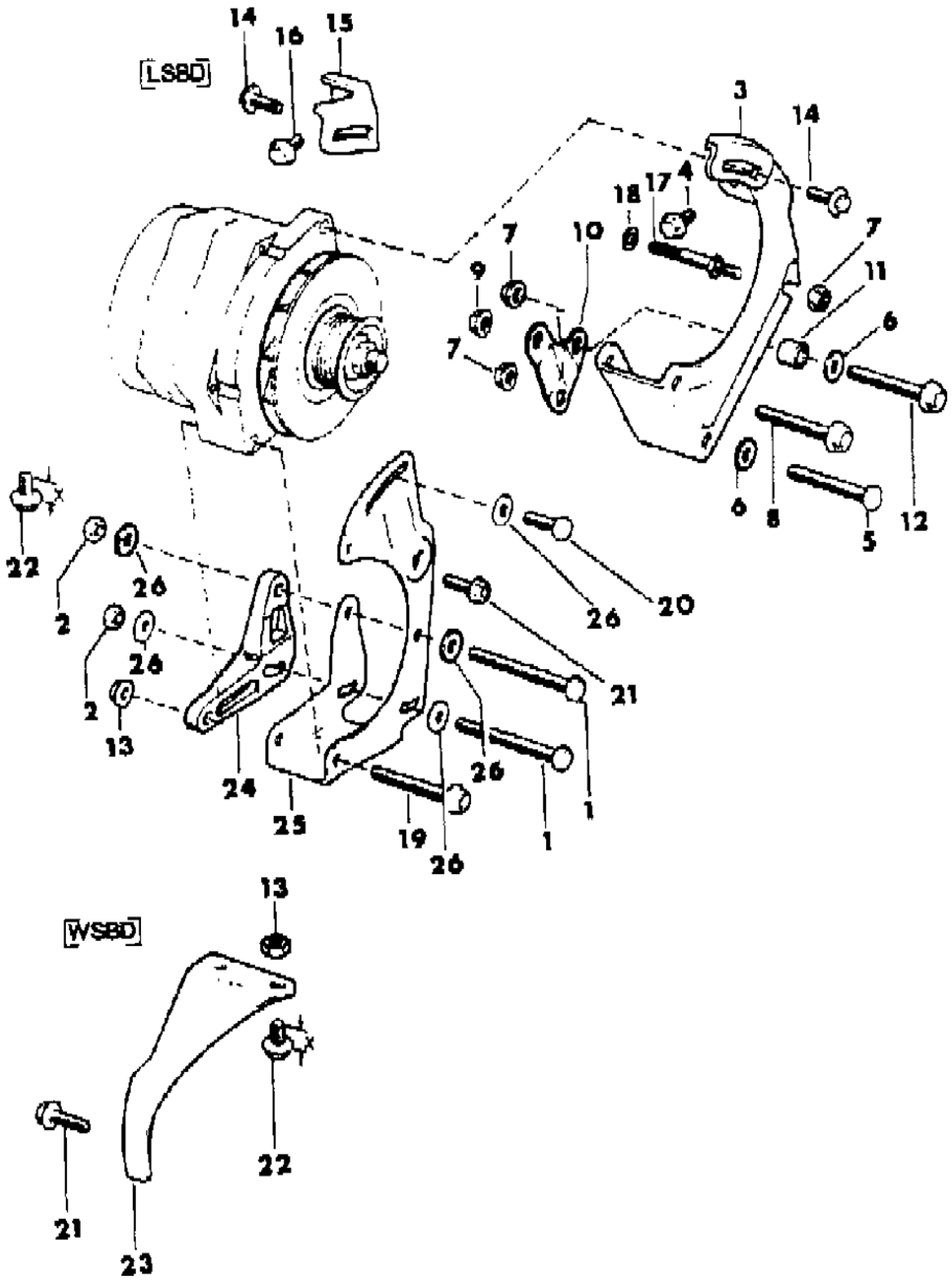

ITEM	PART NUMBER	QTY	BODY	MODEL	DESCRIPTION
1	J045 6958	2			BOLT
2	J400 4747	2			NUT
3	3300 1658	1			BRACKET
4	J941 9885	1			BOLT
5	J018 0137	1			BOLT
6	J400 1140	2			WASHER
7	J400 4747	3			NUT
8	1150 4745	1			BOLT
9	1150 1850	1			NUT
10	3300 1715	1			BRACKET
11	3420 1903	1			SPACER
12	J018 9305	1			BOLT
13	1150 1850	2			NUT
14	3420 1818	2			BOLT
15	3300 1574	1			BRACE
16	J941 9885	1			BOLT
17	J400 7154	1			STUD
18	J400 3803	1			WASHER
19	1150 5025	1			BOLT
20	J400 6995	1			BOLT
21	3420 1818	2			BOLT
22					BOLT
	3420 1868	1			16mm
	3420 1869	1			35mm
23	5300 1118	1			BRACE
24	3300 1724	1			BRACE
25	5300 1117	1			BRACKET
26	J400 1104	5			WASHER

MODEL CODES

16=Cherokee 2 Dr.(1981-83)	78=Cherokee 4WD-4 Dr.(1984-86)	64=Comanche 2WD-6 Ft. Box(1986)	25=J-10 Truck 7 Ft. Box(1981-84)
17=Cherokee 2 Dr.(1981-83)	85=CJ-5 (1981-83)	66=Comanche 2WD-7 Ft. Box(1986)	26=J10 Truck 8 Ft. Box(1981-86)
73=Cherokee 2WD-2 Dr.(1984-86)	86=CJ-6(1981)	63=Comanche 4WD-6 Ft. Box(1986)	27=J-20 Truck 8 Ft. Box(1981-86)
74=Cherokee 2WD-4 Dr.(1984-86)	87=CJ-7(1981-86)	65=Comanche 4WD-7 Ft. Box(1986)	15=Wagoneer 4 Dr.(1981-83)
18=Cherokee 4 Dr.(1981-83)	88=CJ-8, Scrambler(1981-86)	15=Grand Wagoneer 4 Dr.(1984-86)	75=Wagoneer 4WD-4 Dr.(1984-86)
77=Cherokee 4WD-2 Dr.(1984-86)			

BODY
CJ=CJ-5, CJ-6, CJ-7, CJ-8, Scrambler(1981-86)
MJ=Comanche Pickup(1986)

STYLES
SJ=Wagoneer(1981-83), Grand Wagoneer(1984-86), Cherokee(1981-83), J-10, J-20(1981-86)
XJ=Wagoneer(1984-86), Cherokee(1984-86)

AR = Use as Required - = Non Illustrated Part P.A.R. = Paint as Required

« RETURN TO GROUP INDEX

ALTERNATOR MOUNTING FOUR CYLINDER---AMERICAN AIR XJ CHEROKEE, XJ WAGONEER, COMANCHE
Figure 8-4900

81J08 4900

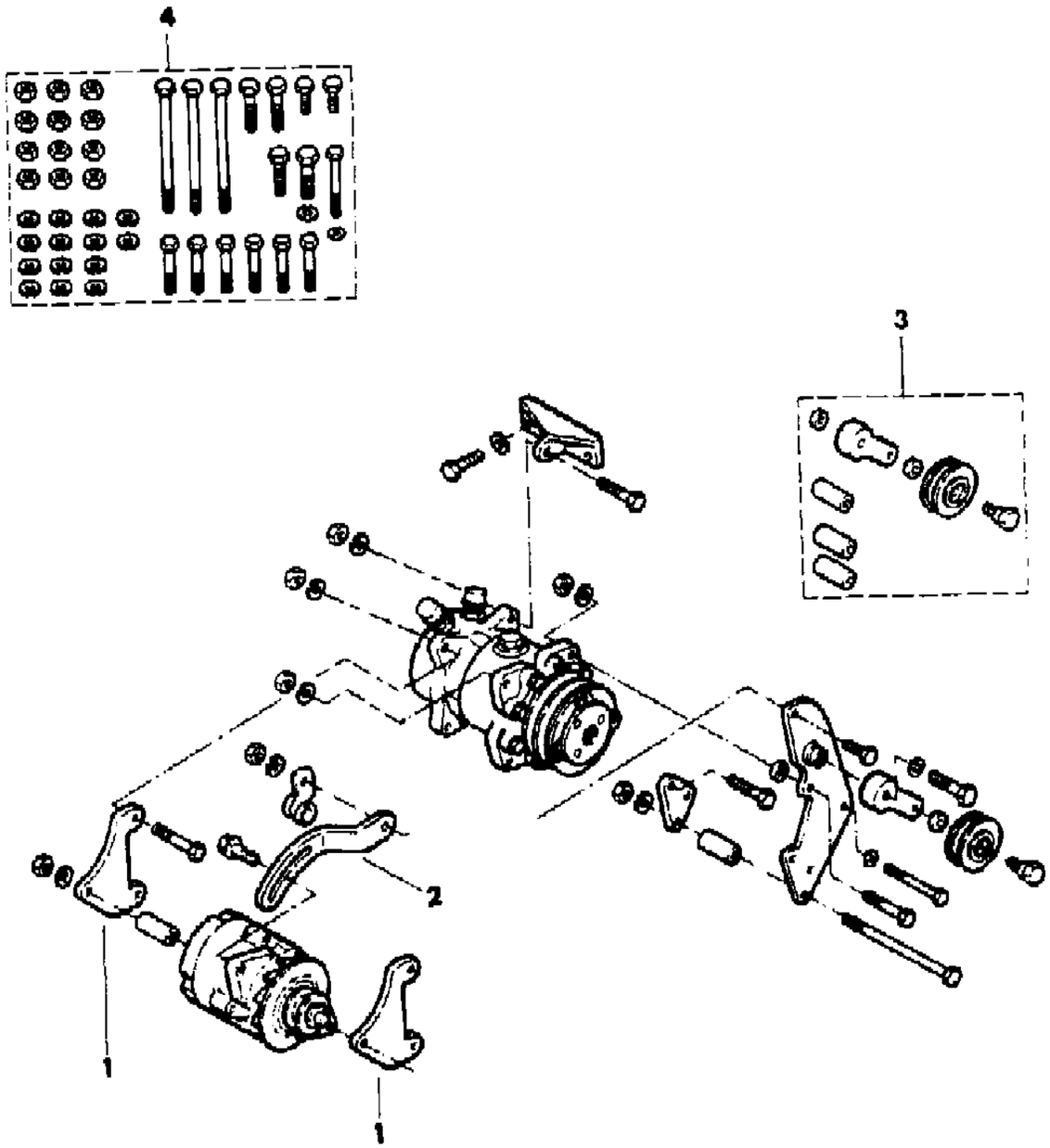

ITEM	PART NUMBER	QTY	BODY	MODEL	DESCRIPTION
1	8350 1920	2			BRACKET, Mounting
2	8350 1921	1			BRACKET, Adjusting
3	8350 1857	1			IDLER PULLEY PACKAGE ***
4	8350 1922	1			BOLT PACKAGE ***

MODEL CODES

16=Cherokee 2 Dr.(1981-83)
17=Cherokee 2 Dr.(1981-83)
73=Cherokee 2WD-2 Dr.(1984-86)
74=Cherokee 2WD-4 Dr.(1984-86)
18=Cherokee 4 Dr.(1981-83)
77=Cherokee 4WD-2 Dr.(1984-86)
78=Cherokee 4WD-4 Dr.(1984-86)
85=CJ-5 (1981-83)
86=CJ-6(1981)
87=CJ-7(1981-86)
88=CJ-8, Scrambler(1981-86)
64=Comanche 2WD-6 Ft. Box(1986)
66=Comanche 2WD-7 Ft. Box(1986)
63=Comanche 4WD-6 Ft. Box(1986)
65=Comanche 4WD-7 Ft. Box(1986)
15=Grand Wagoneer 4 Dr.(1984-86)
25=J-10 Truck 7 Ft. Box(1981-84)
26=J10 Truck 8 Ft. Box(1981-86)
27=J-20 Truck 8 Ft. Box(1981-86)
15=Wagoneer 4 Dr.(1981-83)
75=Wagoneer 4WD-4 Dr.(1984-86)

BODY
CJ=CJ-5, CJ-6, CJ-7, CJ-8, Scrambler(1981-86)
MJ=Comanche Pickup(1986)

STYLES
SJ=Wagoneer(1981-83), Grand Wagoneer(1984-86), Cherokee(1981-83), J-10, J-20(1981-86)
XJ=Wagoneer(1984-86), Cherokee(1984-86)

AR = Use as Required - = Non Illustrated Part P.A.R. = Paint as Required

« RETURN TO GROUP INDEX

ALTERNATOR MOUNTING SIX CYLINDER XJ CHEROKEE, XJ WAGONEER, COMANCHE
Figure 8-5000

81J08 5000

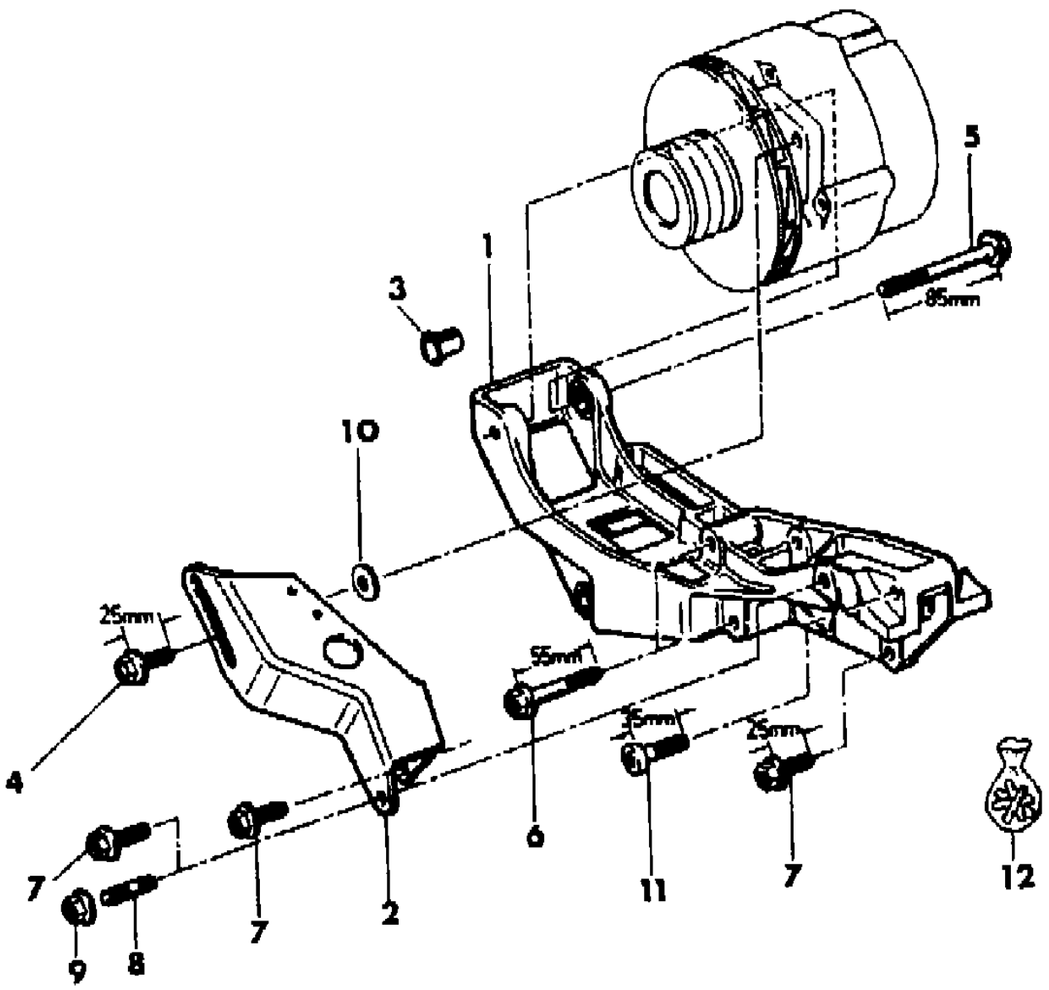

ITEM	PART NUMBER	QTY	BODY	MODEL	DESCRIPTION
1					BRACKET, Pivot
	5300 0546	1			w/Factory A/C
	5300 0546	1			w/American A/C
	5300 0767	1			w/o A/C
2	5300 0549	1			BRACKET, Adjusting
3	5300 0548	2			SPACER
4	3420 1818	1			BOLT
5	S150 5199	1			BOLT
6	3420 2029	2			BOLT
7					BOLT
	1150 1850	2			w/A/C
	1150 2606	3			w/o A/C
8	3420 1567	1			STUD
9	1150 1850	1			NUT
10	J400 6839	1			WASHER
11	J420 0446	1			BOLT
12	8350 2104	1			BOLT PACKAGE ***

MODEL CODES
16=Cherokee 2 Dr.(1981-83)
17=Cherokee 2 Dr.(1981-83)
73=Cherokee 2WD-2 Dr.(1984-86)
74=Cherokee 2WD-4 Dr.(1984-86)
18=Cherokee 4 Dr.(1981-83)
77=Cherokee 4WD-2 Dr.(1984-86)
78=Cherokee 4WD-4 Dr.(1984-86)
85=CJ-5 (1981-83)
86=CJ-6(1981)
87=CJ-7(1981-86)
88=CJ-8, Scrambler(1981-86)
64=Comanche 2WD-6 Ft. Box(1986)
66=Comanche 2WD-7 Ft. Box(1986)
63=Comanche 4WD-6 Ft. Box(1986)
65=Comanche 4WD-7 Ft. Box(1986)
15=Grand Wagoneer 4 Dr.(1984-86)
25=J-10 Truck 7 Ft. Box(1981-84)
26=J10 Truck 8 Ft. Box(1981-86)
27=J-20 Truck 8 Ft. Box(1981-86)
15=Wagoneer 4 Dr.(1981-83)
75=Wagoneer 4WD-4 Dr.(1984-86)

BODY
CJ=CJ-5, CJ-6, CJ-7, CJ-8, Scrambler(1981-86)
MJ=Comanche Pickup(1986)

STYLES
SJ=Wagoneer(1981-83), Grand Wagoneer(1984-86), Cherokee(1981-83), J-10, J-20(1981-86)
XJ=Wagoneer(1984-86), Cherokee(1984-86)

AR = Use as Required - = Non Illustrated Part P.A.R. = Paint as Required

« RETURN TO GROUP INDEX

ALTERNATOR MOUNTING 2.1L DIESEL XJ CHEROKEE, XJ WAGONEER, COMANCHE
Figure 8-5100

81J08 5100

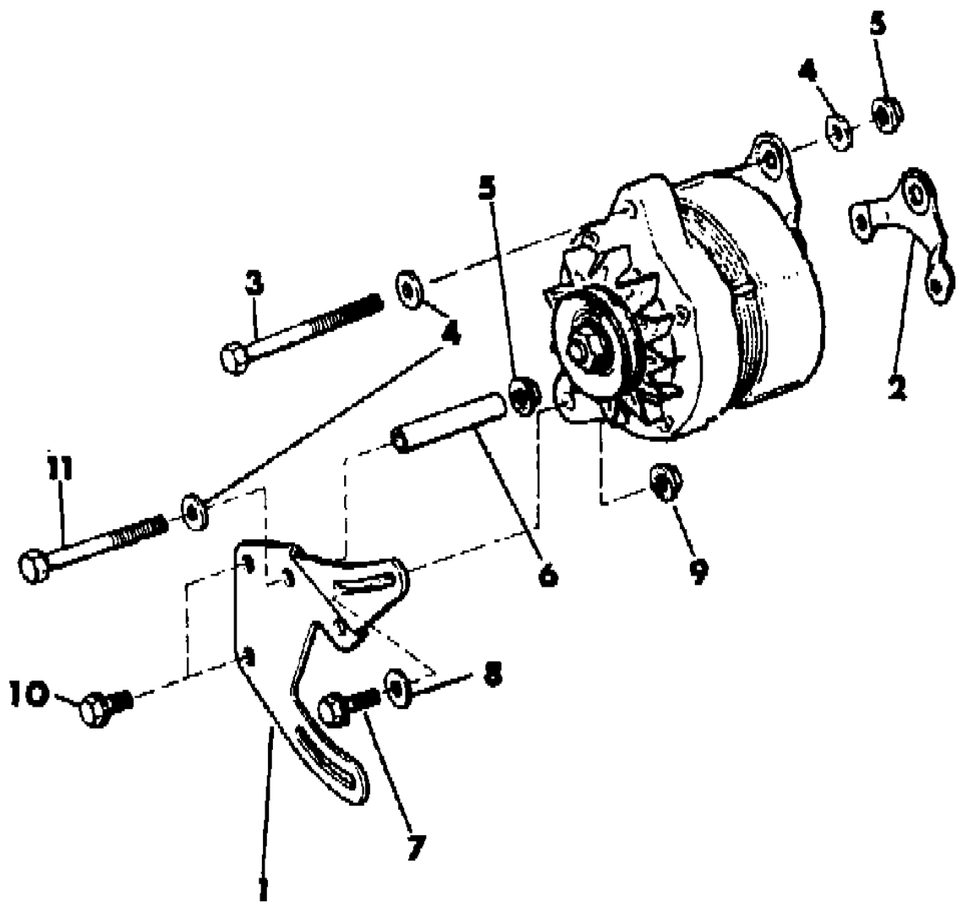

ITEM	PART NUMBER	QTY	BODY	MODEL	DESCRIPTION
1	5300 1768	1			BRACKET, Adjusting
2					BRACKET, Rear
	8350 2003	1			Tagged, A13N107 or A13N117
	8350 2002	1			Tagged, A13N108
3	T063 7598	1			BOLT
4	J400 1104	3			WASHER
5	1150 2812	2			NUT
6	3420 2052	1			SPACER
7	3420 2062	1			BOLT
8	1150 0255	1			WASHER
9	1150 2811	1			NUT
10	3420 2060	2			BOLT
11	T300 1695	1			BOLT

MODEL CODES

16=Cherokee 2 Dr.(1981-83)
17=Cherokee 2 Dr.(1981-83)
73=Cherokee 2WD-2 Dr.(1984-86)
74=Cherokee 2WD-4 Dr.(1984-86)
18=Cherokee 4 Dr.(1981-83)
77=Cherokee 4WD-2 Dr.(1984-86)
78=Cherokee 4WD-4 Dr.(1984-86)
85=CJ-5 (1981-83)
86=CJ-6(1981)
87=CJ-7(1981-86)
88=CJ-8, Scrambler(1981-86)
64=Comanche 2WD-6 Ft. Box(1986)
66=Comanche 2WD-7 Ft. Box(1986)
63=Comanche 4WD-6 Ft. Box(1986)
65=Comanche 4WD-7 Ft. Box(1986)
15=Grand Wagoneer 4 Dr.(1984-86)
25=J-10 Truck 7 Ft. Box(1981-84)
26=J10 Truck 8 Ft. Box(1981-86)
27=J-20 Truck 8 Ft. Box(1981-86)
15=Wagoneer 4 Dr.(1981-83)
75=Wagoneer 4WD-4 Dr.(1984-86)

BODY
CJ=CJ-5, CJ-6, CJ-7, CJ-8, Scrambler(1981-86)
MJ=Comanche Pickup(1986)

STYLES
SJ=Wagoneer(1981-83), Grand Wagoneer(1984-86), Cherokee(1981-83), J-10, J-20(1981-86)
XJ=Wagoneer(1984-86), Cherokee(1984-86)

AR = Use as Required - = Non Illustrated Part P.A.R. = Paint as Required

« RETURN TO GROUP INDEX

ALTERNATOR 42-56-63-78 AMP. SJ CHEROKEE, SJ WAGONEER, J10, J20
Figure 8-5200

81J08 5200

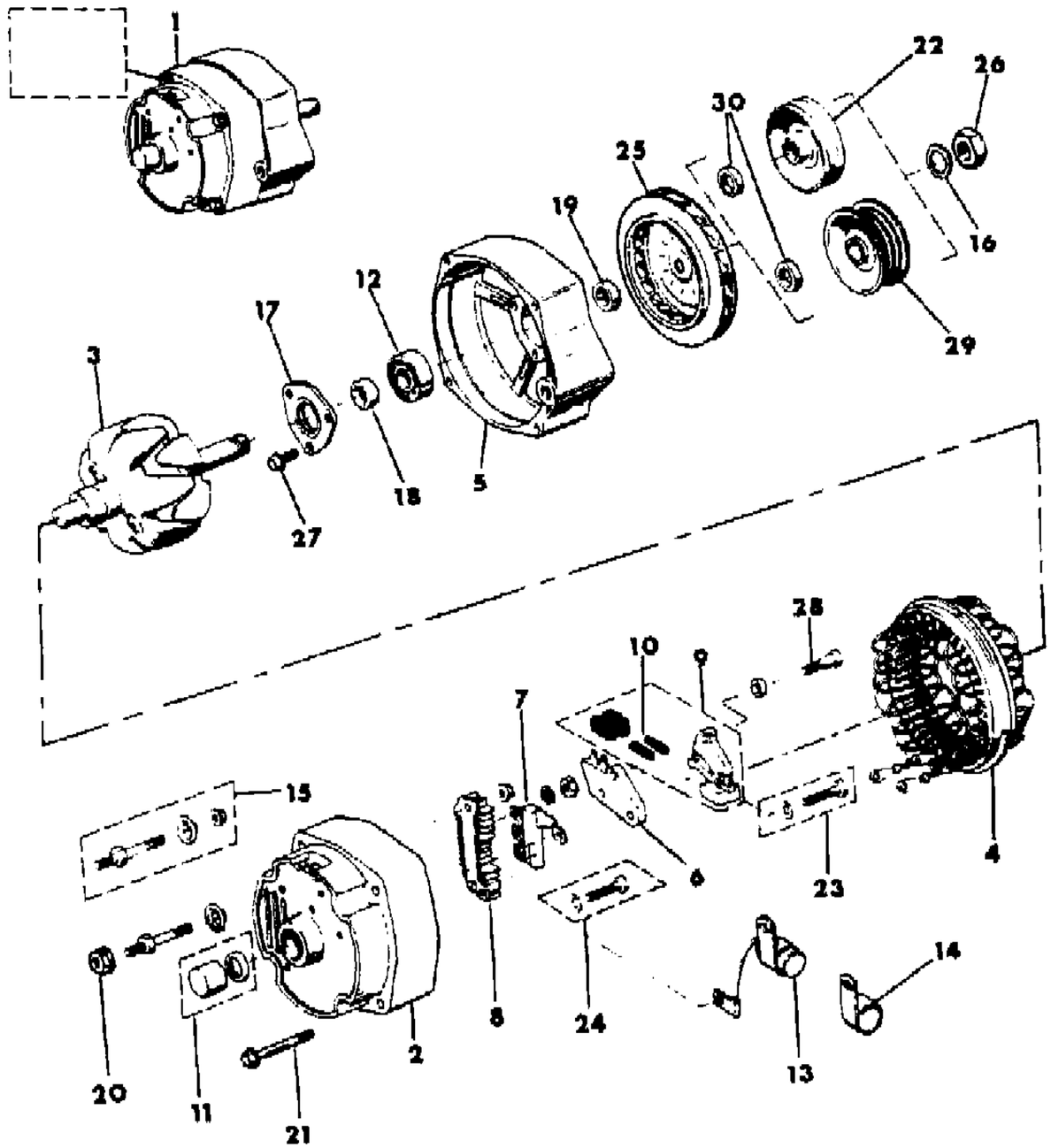

ITEM	PART NUMBER	QTY	BODY	MODEL	DESCRIPTION
1					ALTERNATOR ASSEMBLY
					Remanufactured
	JR77 5004	1			42 Amp
	JR77 5006	1			63 Amp
	JR77 5005	1			56 or 78 Amp
					EXPORT
	J813 4663	1			42 Amp
	J813 1881	1			63 Amp
	J813 4664	1			56 or 78 Amp
2					HOUSING, Rear
	J813 4651	1			Tagged 1105081,1105082,1105083, or 1105084
	J813 2555	1			Tagged 1105079,1105080,100129,1100159,1103155,110 3196, or 1100158
3					ROTOR
	J813 4646	1			Tagged 1105080
	J813 4645	1			Tagged 1105081,1105082,1105083,1105084,1105079,10 0129, 100159,1103155,1103196, or 100158
4					STATOR
	J813 4648	1			Tagged 1105081 or 1105082
	J813 4649	1			Tagged 1105083 or 1105084
	J813 5174	1			Tagged 1105079,1105080,100159, or 1100158
	J812 5196	1			Tagged 1100129,1103155 or 1103196
5					HOUSING, Front
	J813 4655	1			Tagged 1105081,1105082,1105083 or 1105084
	J813 4654	1			Tagged 1105079 or 1105080
	J813 2557	1			Tagged 1100129,100159,1103155,1103196 or 1100158
6	J812 5176	1			REGULATOR, Voltage
7					DIODE TRIO ***
	J813 3268	1			Tagged 1102081,1105082,1105083,11050084,1105079, or 1105080
	J812 5177	1			Tagged 1100129, 100159,1103155,1103196, or 110015 8
8					RECTIFIER
	J813 4650	1			Tagged 1105081,1105082,1105083,1105084,1105079, o r 1105080
	J812 5178	1			Tagged 1100129,1100159,1103155,1103196 or 1100158
9					HOLDER, Brush
	J813 4652	1			Tagged 1105081,1105082,1105083,1105084,1105079 or 1105080
	J812 5179	1			Tagged 1100129,100159,1103155,1103196 or 1100158

MODEL CODES

16=Cherokee 2 Dr.(1981-83)	78=Cherokee 4WD-4 Dr.(1984-86)	64=Comanche 2WD-6 Ft. Box(1986)	25=J-10 Truck 7 Ft. Box(1981-84)
17=Cherokee 2 Dr.(1981-83)	85=CJ-5 (1981-83)	66=Comanche 2WD-7 Ft. Box(1986)	26=J10 Truck 8 Ft. Box(1981-86)
73=Cherokee 2WD-2 Dr.(1984-86)	86=CJ-6(1981)	63=Comanche 4WD-6 Ft. Box(1986)	27=J-20 Truck 8 Ft. Box(1981-86)
74=Cherokee 2WD-4 Dr.(1984-86)	87=CJ-7(1981-86)	65=Comanche 4WD-7 Ft. Box(1986)	15=Wagoneer 4 Dr.(1981-83)
18=Cherokee 4 Dr.(1981-83)	88=CJ-8, Scrambler(1981-86)	15=Grand Wagoneer 4 Dr.(1984-86)	75=Wagoneer 4WD-4 Dr.(1984-86)
77=Cherokee 4WD-2 Dr.(1984-86)			

BODY
CJ=CJ-5, CJ-6, CJ-7, CJ-8, Scrambler(1981-86)
MJ=Comanche Pickup(1986)

STYLES
SJ=Wagoneer(1981-83), Grand Wagoneer(1984-86), Cherokee(1981-83), J-10, J-20(1981-86)
XJ=Wagoneer(1984-86), Cherokee(1984-86)

AR = Use as Required - = Non Illustrated Part P.A.R. = Paint as Required

« RETURN TO GROUP INDEX »

ALTERNATOR 42-56-63-78 AMP. SJ CHEROKEE, SJ WAGONEER, J10, J20
Figure 8-5200

81J08 5200

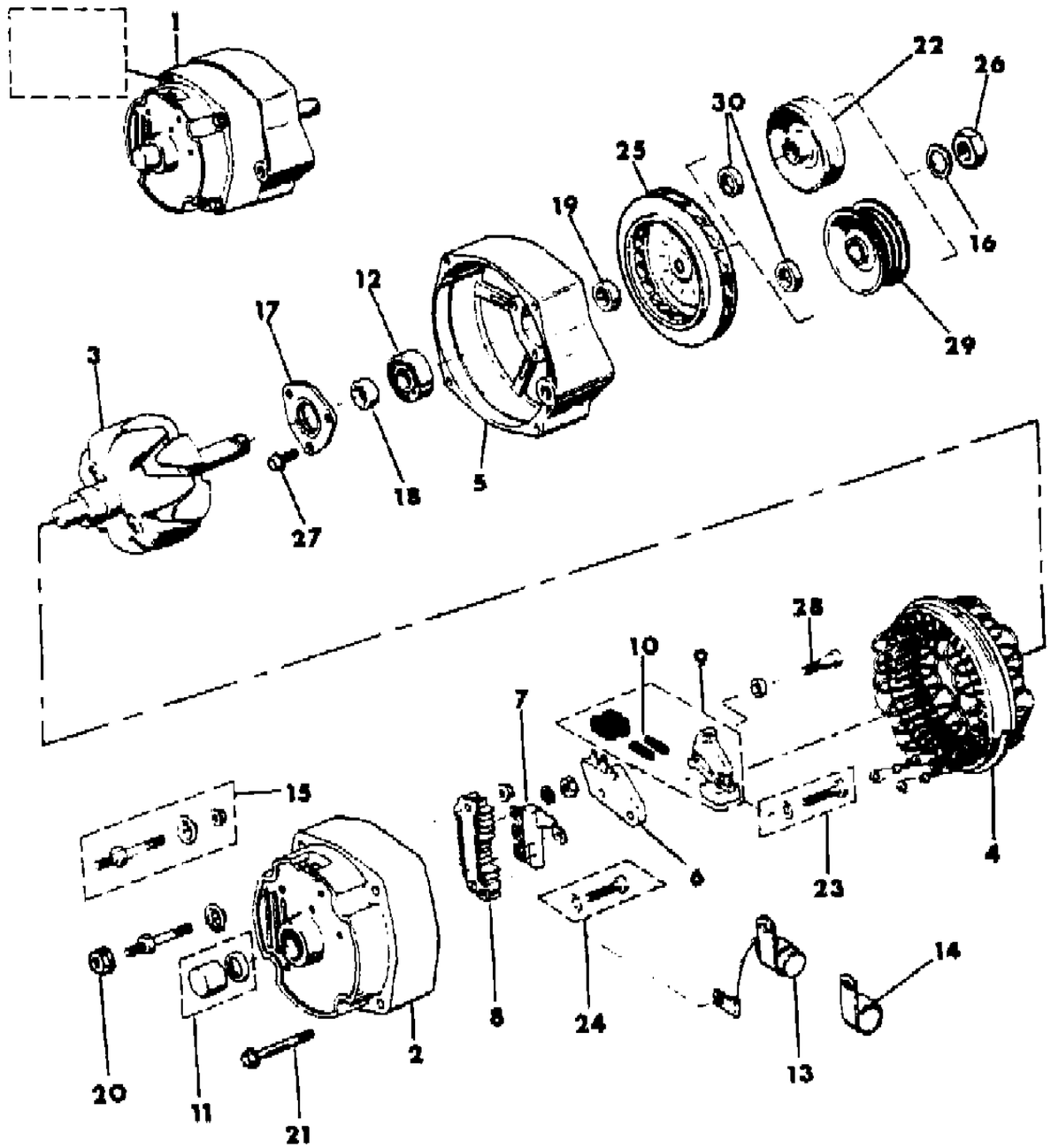

ITEM	PART NUMBER	QTY	BODY	MODEL	DESCRIPTION
10					SPRING
	J813 4653	2			Tagged 1105081,1105082,1105083,1105084 or 1105079
	J813 3272	2			Tagged 1105080
	J812 5180	2			Tagged 100129,1100159,1103155,1103196 or 1100158
11					BEARING
	J813 4644	1			Tagged 1105081,1105082,1105083,1105084,1105079 or 1105080
	J812 5181	1			Tagged 1100129,1100159,1103155,1103196 or 1100158
12					BEARING
	J813 4657	1			Tagged 1105081,1105082,1105083,1105084,1105079 or 1105080
	J812 5182	1			Tagged 1100129,1100159,1103155,1103196 or 1100158
13	J812 5183	1			CAPACITOR
14	J812 5184	1			CLAMP
15					TERMINAL
	J813 3274	1			Tagged 1105081,1105082,1105083,1105084,1105079 or 1105080
	J813 2556	1			Tagged 1100129,1100159,1103155,1103196 or 1100158
16	J813 3280	1			WASHER
17					RETAINER
	J813 4658	1			Tagged 1105081,1105082,1105083,1105084,1105079 or 1105080
	J812 5187	1			Tagged 1100129,1100159,1103155,1103196 or 1100158
18					COLLAR
	J813 3279	1			Tagged 1105081,1105082,1105083,1105084,1105079 or 1105080
	J812 5188	1			Tagged 1100129,1100159,1103155,1103196 or 1100158
19					COLLAR
	J713 4659	1			Tagged 1105081,1105082,1105083 or 1105084
	J813 2696	1			Tagged 1105079,1105080,1100129,1100159,1103155,1103196 or 1100158
20	J420 0453	1			NUT
21	J812 5191	4			BOLT
22	J813 2698	1			PULLEY, V-Belt
23	J813 3273	1			SCREW
24	J813 4669	1			SCREW
25					FAN, Alternator
	J813 4662	1			Tagged 1105081,1105082,1105083 or1105084
	J813 2695	1			Tagged 1105079,1100129 or 1100158

MODEL CODES

16=Cherokee 2 Dr.(1981-83)
17=Cherokee 2 Dr.(1981-83)
73=Cherokee 2WD-2 Dr.(1984-86)
74=Cherokee 2WD-4 Dr.(1984-86)
18=Cherokee 4 Dr.(1981-83)
77=Cherokee 4WD-2 Dr.(1984-86)
78=Cherokee 4WD-4 Dr.(1984-86)
85=CJ-5 (1981-83)
86=CJ-6(1981)
87=CJ-7(1981-86)
88=CJ-8, Scrambler(1981-86)
64=Comanche 2WD-6 Ft. Box(1986)
66=Comanche 2WD-7 Ft. Box(1986)
63=Comanche 4WD-6 Ft. Box(1986)
65=Comanche 4WD-7 Ft. Box(1986)
15=Grand Wagoneer 4 Dr.(1984-86)
25=J-10 Truck 7 Ft. Box(1981-84)
26=J10 Truck 8 Ft. Box(1981-86)
27=J-20 Truck 8 Ft. Box(1981-86)
15=Wagoneer 4 Dr.(1981-83)
75=Wagoneer 4WD-4 Dr.(1984-86)

BODY
CJ=CJ-5, CJ-6, CJ-7, CJ-8, Scrambler(1981-86)
MJ=Comanche Pickup(1986)

STYLES
SJ=Wagoneer(1981-83), Grand Wagoneer(1984-86), Cherokee(1981-83), J-10, J-20(1981-86)
XJ=Wagoneer(1984-86), Cherokee(1984-86)

AR = Use as Required - = Non Illustrated Part P.A.R. = Paint as Required

ALTERNATOR 42-56-63-78 AMP. SJ CHEROKEE, SJ WAGONEER, J10, J20
Figure 8-5200

81J08 5200

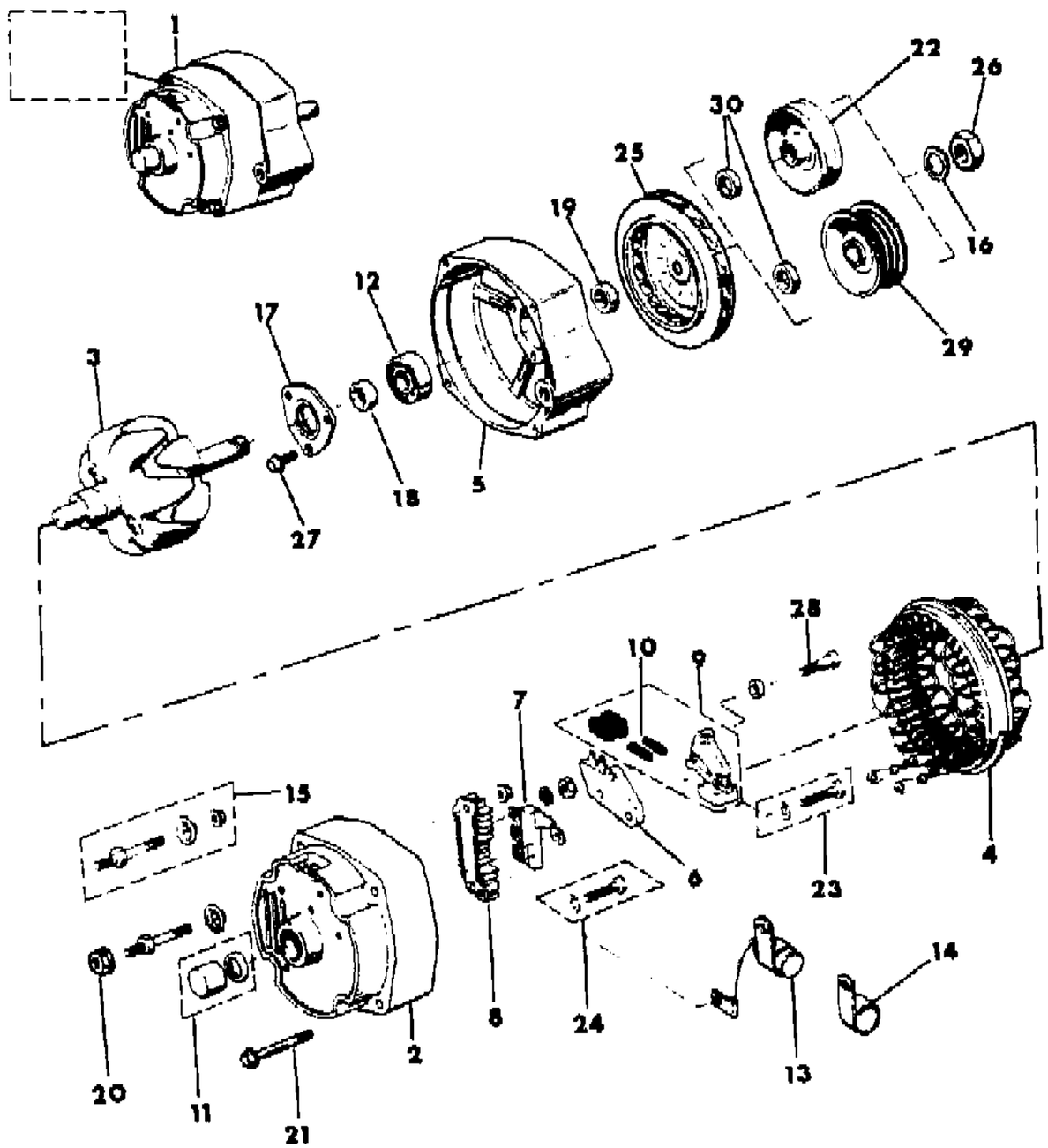

ITEM	PART NUMBER	QTY	BODY	MODEL	DESCRIPTION
	J812 5193	1			Tagged 1105080,1100159 or 1103155
26	J812 5242	1			NUT
27	J813 4668	1			SCREW
28	J812 5244	1			SCREW
29					PULLEY, Serpentine Drive
	J813 4194	1			Tagged 1105081,1105082,1105083 or 1105084
	J812 8522	1			Tagged 1100159 or 1103155
30	J813 3299	1			COLLAR

MODEL CODES

16=Cherokee 2 Dr.(1981-83)
17=Cherokee 2 Dr.(1981-83)
73=Cherokee 2WD-2 Dr.(1984-86)
74=Cherokee 2WD-4 Dr.(1984-86)
18=Cherokee 4 Dr.(1981-83)
77=Cherokee 4WD-2 Dr.(1984-86)
78=Cherokee 4WD-4 Dr.(1984-86)
85=CJ-5 (1981-83)
86=CJ-6(1981)
87=CJ-7(1981-86)
88=CJ-8, Scrambler(1981-86)
64=Comanche 2WD-6 Ft. Box(1986)
66=Comanche 2WD-7 Ft. Box(1986)
63=Comanche 4WD-6 Ft. Box(1986)
65=Comanche 4WD-7 Ft. Box(1986)
15=Grand Wagoneer 4 Dr.(1984-86)
25=J-10 Truck 7 Ft. Box(1981-84)
26=J10 Truck 8 Ft. Box(1981-86)
27=J-20 Truck 8 Ft. Box(1981-86)
15=Wagoneer 4 Dr.(1981-83)
75=Wagoneer 4WD-4 Dr.(1984-86)

BODY
CJ=CJ-5, CJ-6, CJ-7, CJ-8, Scrambler(1981-86)
MJ=Comanche Pickup(1986)

STYLES
SJ=Wagoneer(1981-83), Grand Wagoneer(1984-86), Cherokee(1981-83), J-10, J-20(1981-86)
XJ=Wagoneer(1984-86), Cherokee(1984-86)

AR = Use as Required - = Non Illustrated Part P.A.R. = Paint as Required

« RETURN TO GROUP INDEX

ALTERNATOR 85-94 AMP. SJ CHEROKEE, SJ WAGONEER, J10, J20
Figure 8-5300

81J08 5300

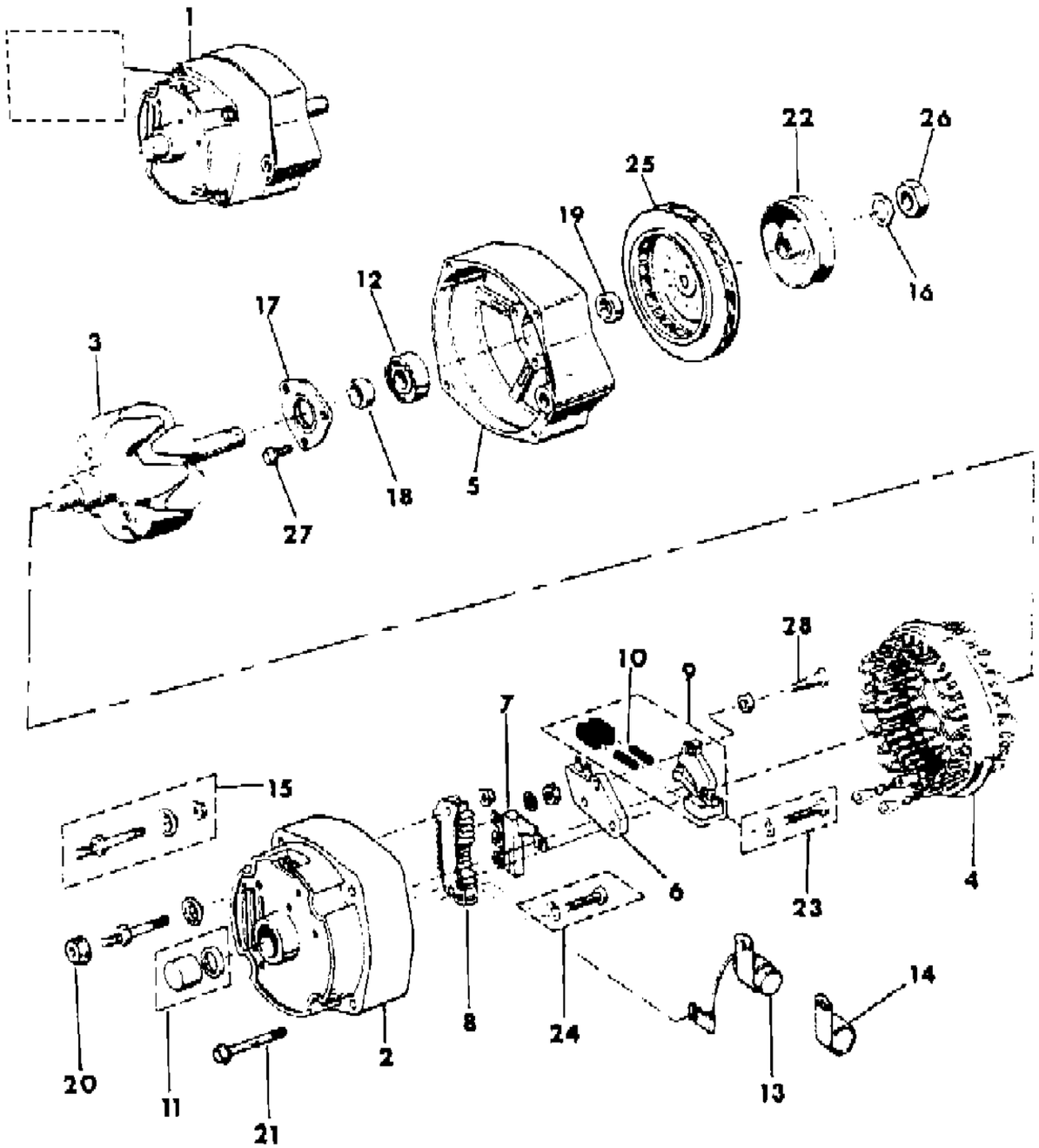

ITEM	PART NUMBER	QTY	BODY	MODEL	DESCRIPTION
1					ALTERNATOR ASSEMBLY
	J813 4666	1			85 Amp
	8350 5104	1			94 Amp
2					HOUSING, Rear
	J813 3266	1			Tagged 1105346
3					ROTOR
	J813 3264	1			Tagged 1101484
	J813 4646	1			Tagged 1105346
4					STATOR
	J813 3265	1			Tagged 1105346
5					HOUSING, Front
	J813 4656	1			Tagged 1105346
6					REGULATOR, Voltage
	J812 5176	1			Tagged 1105346
	8350 5214	1			Tagged 1101484
7	J813 3268	1			DIODE TRIO ***
8					RECTIFIER
	J813 3269	1			Tagged 1105346
	8350 5216	1			Tagged 1101484
9					HOLDER, Brush
	J813 3271	1			Tagged 1105346
	J813 4652	1			Tagged 1101484
10	J813 4653	1			SPRING
11					BEARING
	J813 3267	1			Tagged 1105346
	8350 5217	1			Tagged 1101484
12					BEARING
	J813 4657	1			Tagged 1105346
	8350 5215	1			Tagged 1101484
13	J812 5183	1			CAPACITOR
14	J812 5184	1			CLAMP
15	J813 3274	1			TERMINAL
16	J813 3280	1			WASHER
17	J813 4658	1			RETAINER
18					COLLAR
	J813 4661	1			Tagged 1105346
	J813 3279	1			Tagged 1101484
19					COLLAR
	J813 4660	1			Tagged 1105346

MODEL CODES

16=Cherokee 2 Dr.(1981-83)
17=Cherokee 2 Dr.(1981-83)
73=Cherokee 2WD-2 Dr.(1984-86)
74=Cherokee 2WD-4 Dr.(1984-86)
18=Cherokee 4 Dr.(1981-83)
77=Cherokee 4WD-2 Dr.(1984-86)
78=Cherokee 4WD-4 Dr.(1984-86)
85=CJ-5 (1981-83)
86=CJ-6(1981)
87=CJ-7(1981-86)
88=CJ-8, Scrambler(1981-86)
64=Comanche 2WD-6 Ft. Box(1986)
66=Comanche 2WD-7 Ft. Box(1986)
63=Comanche 4WD-6 Ft. Box(1986)
65=Comanche 4WD-7 Ft. Box(1986)
15=Grand Wagoneer 4 Dr.(1984-86)
25=J-10 Truck 7 Ft. Box(1981-84)
26=J10 Truck 8 Ft. Box(1981-86)
27=J-20 Truck 8 Ft. Box(1981-86)
15=Wagoneer 4 Dr.(1981-83)
75=Wagoneer 4WD-4 Dr.(1984-86)

BODY
CJ=CJ-5, CJ-6, CJ-7, CJ-8, Scrambler(1981-86)
MJ=Comanche Pickup(1986)

STYLES
SJ=Wagoneer(1981-83), Grand Wagoneer(1984-86), Cherokee(1981-83), J-10, J-20(1981-86)
XJ=Wagoneer(1984-86), Cherokee(1984-86)

AR = Use as Required - = Non Illustrated Part P.A.R. = Paint as Required

« RETURN TO GROUP INDEX »

ALTERNATOR 85-94 AMP. SJ CHEROKEE, SJ WAGONEER, J10, J20
Figure 8-5300

81J08 5300

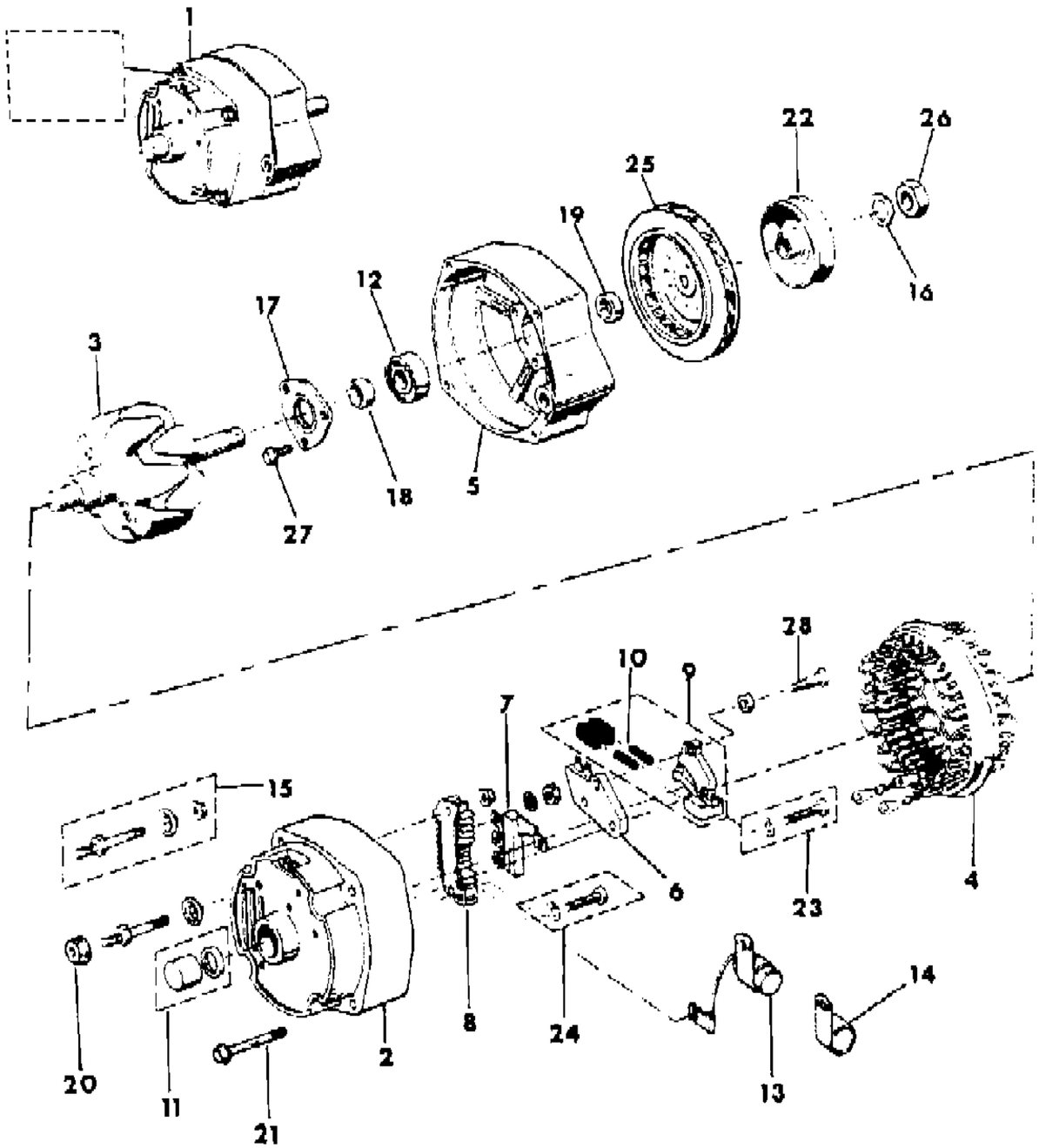

ITEM	PART NUMBER	QTY	BODY	MODEL	DESCRIPTION
	J813 4659	1			Tagged 1101484
20	J420 0453	1			NUT
21	J812 5191	4			BOLT
22	J812 8522	1			PULLEY, V-Belt
23	J813 3273	1			SCREW
24	J813 4669	1			SCREW
25					FAN, Alternator
	J813 3281	1			Tagged 1105346
	J813 4662	1			Tagged 1101484
26	J812 5242	1			NUT
27	J813 4668	3			SCREW
28	J812 5244	2			SCREW

MODEL CODES

16=Cherokee 2 Dr.(1981-83)
17=Cherokee 2 Dr.(1981-83)
73=Cherokee 2WD-2 Dr.(1984-86)
74=Cherokee 2WD-4 Dr.(1984-86)
18=Cherokee 4 Dr.(1981-83)
77=Cherokee 4WD-2 Dr.(1984-86)
78=Cherokee 4WD-4 Dr.(1984-86)
85=CJ-5 (1981-83)
86=CJ-6(1981)
87=CJ-7(1981-86)
88=CJ-8, Scrambler(1981-86)
64=Comanche 2WD-6 Ft. Box(1986)
66=Comanche 2WD-7 Ft. Box(1986)
63=Comanche 4WD-6 Ft. Box(1986)
65=Comanche 4WD-7 Ft. Box(1986)
15=Grand Wagoneer 4 Dr.(1984-86)
25=J-10 Truck 7 Ft. Box(1981-84)
26=J10 Truck 8 Ft. Box(1981-86)
27=J-20 Truck 8 Ft. Box(1981-86)
15=Wagoneer 4 Dr.(1981-83)
75=Wagoneer 4WD-4 Dr.(1984-86)

BODY
CJ=CJ-5, CJ-6, CJ-7, CJ-8, Scrambler(1981-86)
MJ=Comanche Pickup(1986)

STYLES
SJ=Wagoneer(1981-83), Grand Wagoneer(1984-86), Cherokee(1981-83), J-10, J-20(1981-86)
XJ=Wagoneer(1984-86), Cherokee(1984-86)

AR = Use as Required - = Non Illustrated Part P.A.R. = Paint as Required

« RETURN TO GROUP INDEX

ALTERNATOR 70 AMP. SJ CHEROKEE, SJ WAGONEER, J10, J20
Figure 8-5400

81J08 5400

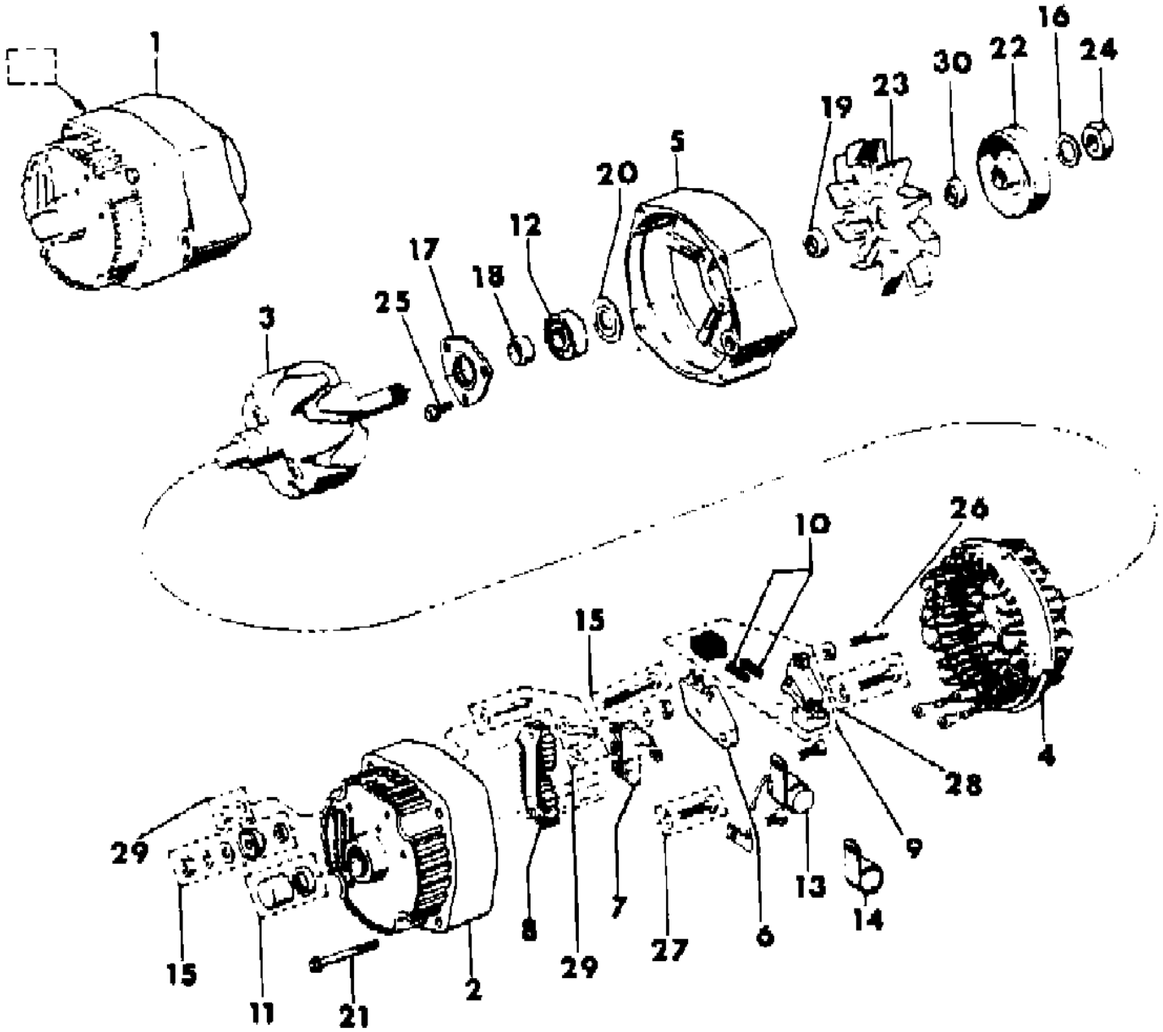

ITEM	PART NUMBER	QTY	BODY	MODEL	DESCRIPTION
1					ALTERNATOR ASSEMBLY
	JR77 5007	1			Remanufactured
	J813 3346	1			EXPORT
2	J813 3266	1			HOUSING, Rear
3	J813 3264	1			ROTOR
4	J813 3265	1			STATOR
5					HOUSING, Front
	J813 4656	1			Tagged 1105347
	J813 3276	1			Tagged 1101087,1101094,1101093,1101436 or 1100223
6	J812 5176	1			REGULATOR, Voltage
7	J813 3268	1			DIODE TRIO ***
8	J813 3269	1			RECTIFIER
9	J813 3271	1			HOLDER, Brush
10	J813 3272	2			SPRING
11	J813 3267	1			BEARING
12					BEARING
	J813 4657	1			Tagged 1105347
	J813 3277	1			Tagged 1101087,1101094,1101093,1101436 or 1100223
13					CAPACITOR
	J812 5183	1			Tagged 1105347
	J813 3275	1			Tagged 1101087,1101094,1101093,1101436 or 1100223
14	J812 5184	1			CLAMP
15	J813 3274	1			TERMINAL
16	J813 3280	1			WASHER
17					RETAINER
	J812 4658	1			Tagged 1105347
	J812 5187	1			Tagged 1101087,1101094,1101093,1101436 or 1100223
18					COLLAR
	J813 4661	1			Tagged 1105347
	J813 3279	1			Tagged 1101087,1101094,1101093,1101436 or 1100223
19					COLLAR
	J813 4660	1			Tagged 1105347
	J813 3278	1			Tagged 1101087,1101094,1101093,1101436 or 1100223
20	J812 5190	1			WASHER
21	J812 5191	4			BOLT
22					PULLEY
	J812 3282	1			Tagged 1101087
	J812 8522	1			Tagged 1101093 or 1101094
	J813 4194	1			Tagged 1100223

MODEL CODES
16=Cherokee 2 Dr.(1981-83)
17=Cherokee 2 Dr.(1981-83)
73=Cherokee 2WD-2 Dr.(1984-86)
74=Cherokee 2WD-4 Dr.(1984-86)
18=Cherokee 4 Dr.(1981-83)
77=Cherokee 4WD-2 Dr.(1984-86)
78=Cherokee 4WD-4 Dr.(1984-86)
85=CJ-5 (1981-83)
86=CJ-6(1981)
87=CJ-7(1981-86)
88=CJ-8, Scrambler(1981-86)
64=Comanche 2WD-6 Ft. Box(1986)
66=Comanche 2WD-7 Ft. Box(1986)
63=Comanche 4WD-6 Ft. Box(1986)
65=Comanche 4WD-7 Ft. Box(1986)
15=Grand Wagoneer 4 Dr.(1984-86)
25=J-10 Truck 7 Ft. Box(1981-84)
26=J10 Truck 8 Ft. Box(1981-86)
27=J-20 Truck 8 Ft. Box(1981-86)
15=Wagoneer 4 Dr.(1981-83)
75=Wagoneer 4WD-4 Dr.(1984-86)

BODY
CJ=CJ-5, CJ-6, CJ-7, CJ-8, Scrambler(1981-86)
MJ=Comanche Pickup(1986)

STYLES
SJ=Wagoneer(1981-83), Grand Wagoneer(1984-86), Cherokee(1981-83), J-10, J-20(1981-86)
XJ=Wagoneer(1984-86), Cherokee(1984-86)

AR = Use as Required - = Non Illustrated Part P.A.R. = Paint as Required

ALTERNATOR 70 AMP. SJ CHEROKEE, SJ WAGONEER, J10, J20
Figure 8-5400

81J08 5400

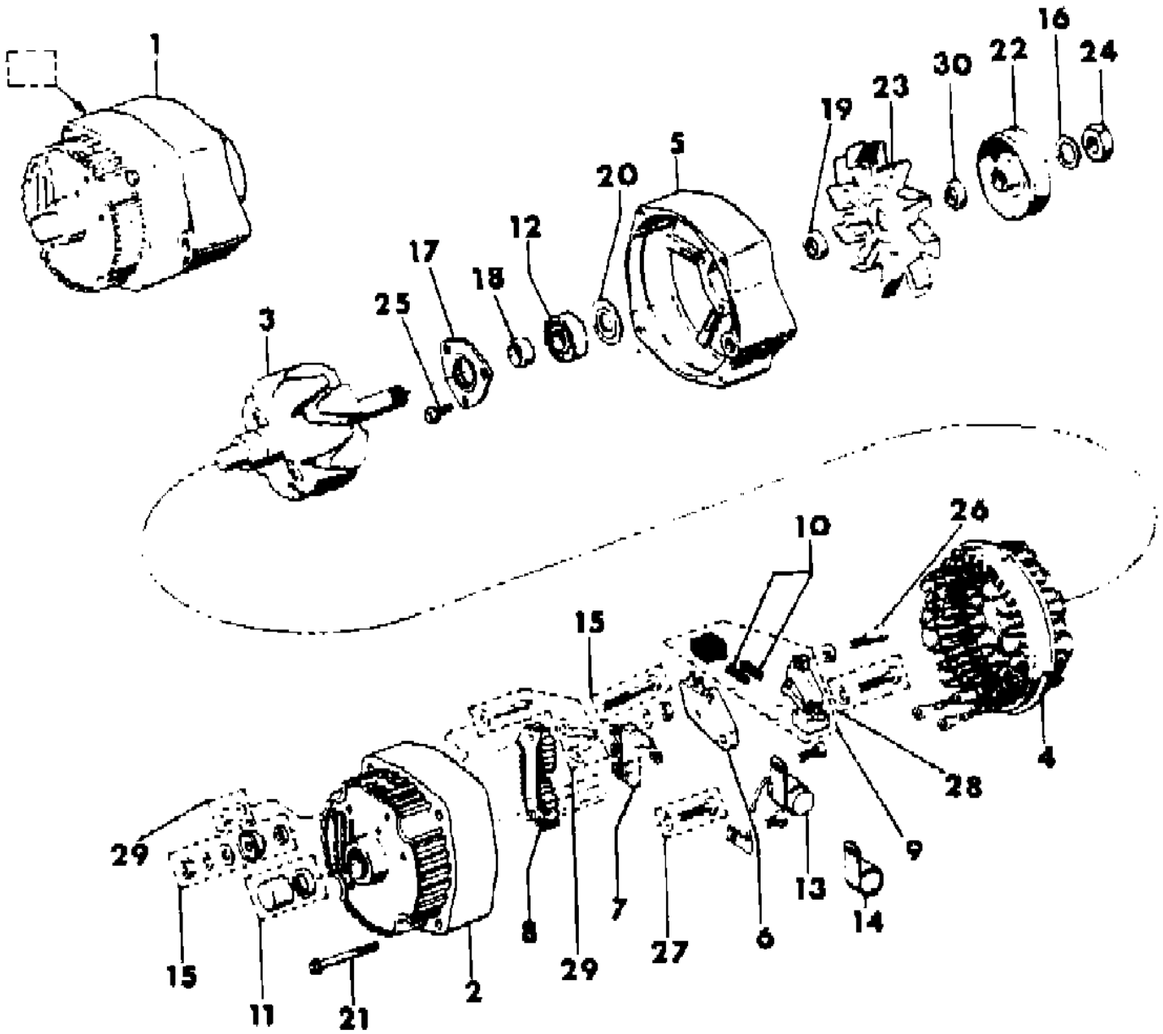

ITEM	PART NUMBER	QTY	BODY	MODEL	DESCRIPTION
23					FAN, ALternator
	J813 3281	1			Tagged 1101087,1101093,1101094 or 1100223
24	J812 5242	1			NUT
25					SCREW
	J813 4668	3			Tagged 1105347
	J812 5243	3			Tagged 1101087,1101093,1101094,1101436 or 1100223
26	J812 5244	2			SCREW
27	J812 5245	1			SCREW
28	J812 3273	1			SCREW
29	J812 3274	1			TERMINAL
30					COLLAR
	J813 3433	1			Tagged 1101093 or 1100223

MODEL CODES

16=Cherokee 2 Dr.(1981-83)
17=Cherokee 2 Dr.(1981-83)
73=Cherokee 2WD-2 Dr.(1984-86)
74=Cherokee 2WD-4 Dr.(1984-86)
18=Cherokee 4 Dr.(1981-83)
77=Cherokee 4WD-2 Dr.(1984-86)
78=Cherokee 4WD-4 Dr.(1984-86)
85=CJ-5 (1981-83)
86=CJ-6(1981)
87=CJ-7(1981-86)
88=CJ-8, Scrambler(1981-86)
64=Comanche 2WD-6 Ft. Box(1986)
66=Comanche 2WD-7 Ft. Box(1986)
63=Comanche 4WD-6 Ft. Box(1986)
65=Comanche 4WD-7 Ft. Box(1986)
15=Grand Wagoneer 4 Dr.(1984-86)
25=J-10 Truck 7 Ft. Box(1981-84)
26=J10 Truck 8 Ft. Box(1981-86)
27=J-20 Truck 8 Ft. Box(1981-86)
15=Wagoneer 4 Dr.(1981-83)
75=Wagoneer 4WD-4 Dr.(1984-86)

BODY
CJ=CJ-5, CJ-6, CJ-7, CJ-8, Scrambler(1981-86)
MJ=Comanche Pickup(1986)

STYLES
SJ=Wagoneer(1981-83), Grand Wagoneer(1984-86), Cherokee(1981-83), J-10, J-20(1981-86)
XJ=Wagoneer(1984-86), Cherokee(1984-86)

AR = Use as Required - = Non Illustrated Part P.A.R. = Paint as Required

« RETURN TO GROUP INDEX

ALTERNATOR 4.2L SIX CYLINDER SJ CHEROKEE, SJ WAGONEER, J10, J20
Figure 8-5500

81J08 5500

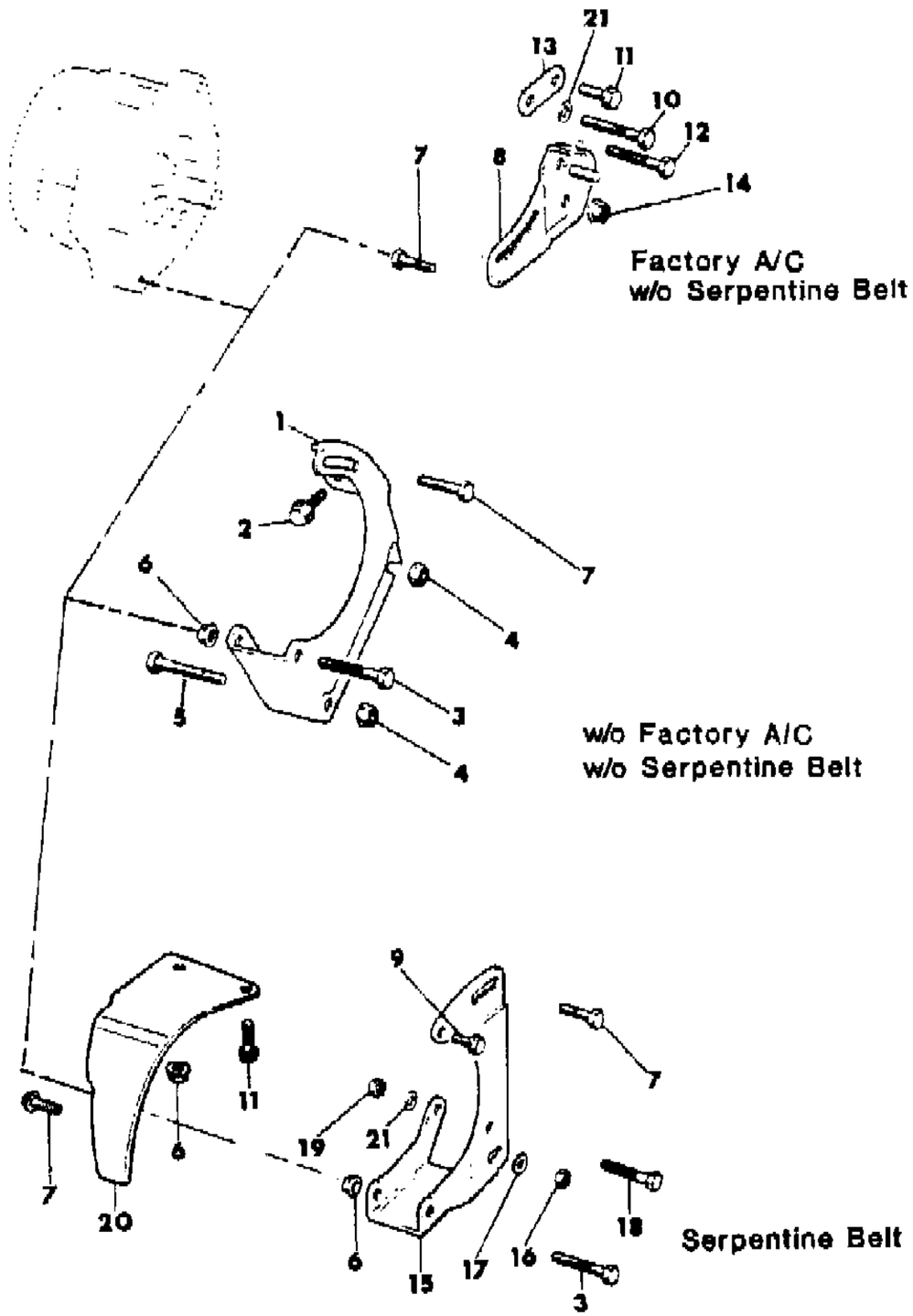

ITEM	PART NUMBER	QTY	BODY	MODEL	DESCRIPTION
1					BRACKET
	J323 7417	1			42,56,63 or 78 Amp
	J323 7576	1			70 or 85 Amp
2					BOLT
	J027 4882	1			.62" Long
	J027 4474	1			1.12" Long
3	1150 0835	1			BOLT
4	J400 3909	2			NUT
5	J018 0137	1			BOLT
6	1150 1850	1			NUT
7	3420 1818	1			BOLT
8					BRACKET
	J323 6310	1			42,56,63 or 78 Amp
	J323 9655	1			70 or 85 Amp
9	J018 0123	1			BOLT
10	J018 9303	1			BOLT
11	J400 6995	1			BOLT
12	J018 0137	1			BOLT
13	J323 0381	1			STRAP
14	J400 3909	1			NUT
15					BRACKET
	J322 4477	1			56,63,66 or 78 Amp
	J323 7577	1			70 Amp
16	J941 3534	1			NUT
17	J400 1104	1			WASHER
18	J018 0138	1			BOLT
19	J400 3909	1			NUT
20					BRACE
	J323 8456	1			1981-82
	J323 8456	1			1983-86: 56,63,66 or 78 Amp
	J323 7580	1			1981-86: 70 Amp
	J323 8456	1			Japan
21	J400 3803	1			WASHER

MODEL CODES

16=Cherokee 2 Dr.(1981-83)	78=Cherokee 4WD-4 Dr.(1984-86)	64=Comanche 2WD-6 Ft. Box(1986)	25=J-10 Truck 7 Ft. Box(1981-84)
17=Cherokee 2 Dr.(1981-83)	85=CJ-5 (1981-83)	66=Comanche 2WD-7 Ft. Box(1986)	26=J10 Truck 8 Ft. Box(1981-86)
73=Cherokee 2WD-2 Dr.(1984-86)	86=CJ-6(1981)	63=Comanche 4WD-6 Ft. Box(1986)	27=J-20 Truck 8 Ft. Box(1981-86)
74=Cherokee 2WD-4 Dr.(1984-86)	87=CJ-7(1981-86)	65=Comanche 4WD-7 Ft. Box(1986)	15=Wagoneer 4 Dr.(1981-83)
18=Cherokee 4 Dr.(1981-83)	88=CJ-8, Scrambler(1981-86)	15=Grand Wagoneer 4 Dr.(1984-86)	75=Wagoneer 4WD-4 Dr.(1984-86)
77=Cherokee 4WD-2 Dr.(1984-86)			

BODY
CJ=CJ-5, CJ-6, CJ-7, CJ-8, Scrambler(1981-86)
MJ=Comanche Pickup(1986)

STYLES
SJ=Wagoneer(1981-83), Grand Wagoneer(1984-86), Cherokee(1981-83), J-10, J-20(1981-86)
XJ=Wagoneer(1984-86), Cherokee(1984-86)

AR = Use as Required - = Non Illustrated Part P.A.R. = Paint as Required

« RETURN TO GROUP INDEX

ALTERNATOR MOUNTING 5.9L EIGHT CYLINDER SJ CHEROKEE, SJ WAGONEER, J10, J20
Figure 8-5600

81J08 5600

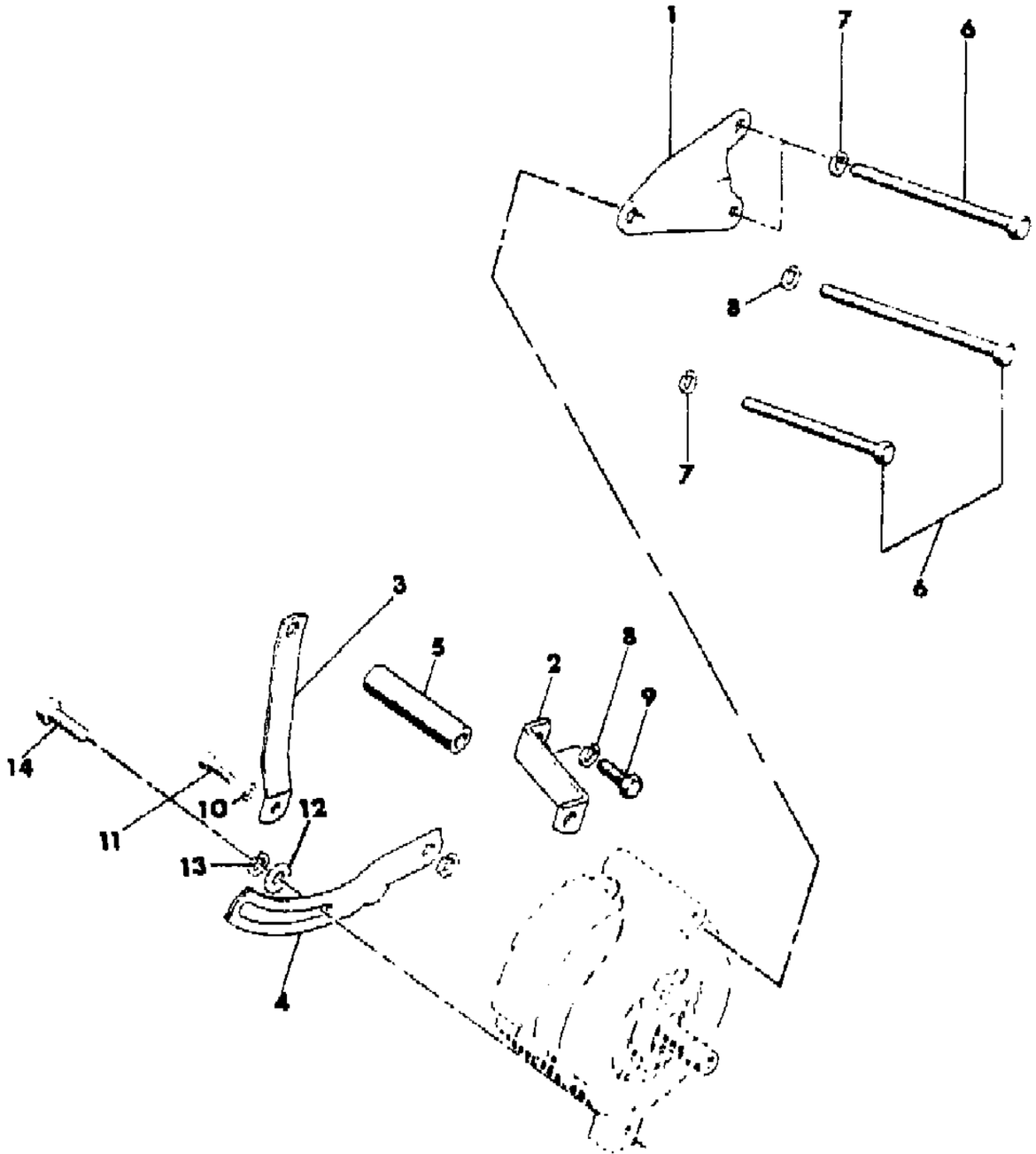

ITEM	PART NUMBER	QTY	BODY	MODEL	DESCRIPTION
1					BRACKET, Front
	J322 7682	1			w/A/C
	J322 7676	1			w/o A/C
2					BRACKET, Rear
	J535 9301	1			w/ A/C
	J535 9302	1			w/o A/C
3					SUPPORT
	J535 9300	1			Tagged 1102080,1105082 or 1101484
	J536 4256	1			Tagged 1105084 or 1105346
4					BRACKET, Adjusting
	J535 7906	1			Tagged 1105080,1105082 or 1101484
	J536 2172	1			Tagged 1105084 or 1105346
5					SPACER
	J400 6186	1			3.44"
	J400 6822	1			3.56"
6					BOLT
	J018 0122	1			1.00"
	S027 4101	1			4.88"
	J019 2406	1			5.25"
	J021 5511	1			5.75"
	J400 6031	1			6.50"
7	J400 3803	1			WASHER
8	J400 4807	1			WASHER
9	J018 0120	1			BOLT
10	1150 0221	1			WASHER
11	1150 1939	1			WASHER
12	J400 1095	1			WASHER
13	J012 0214	1			WASHER
14					BOLT
	J018 0079	1			.31"
	J420 0406	1			8mm
	J420 0419	1			10mm

MODEL CODES

16=Cherokee 2 Dr.(1981-83)
17=Cherokee 2 Dr.(1981-83)
73=Cherokee 2WD-2 Dr.(1984-86)
74=Cherokee 2WD-4 Dr.(1984-86)
18=Cherokee 4 Dr.(1981-83)
77=Cherokee 4WD-2 Dr.(1984-86)
78=Cherokee 4WD-4 Dr.(1984-86)
85=CJ-5 (1981-83)
86=CJ-6(1981)
87=CJ-7(1981-86)
88=CJ-8, Scrambler(1981-86)
64=Comanche 2WD-6 Ft. Box(1986)
66=Comanche 2WD-7 Ft. Box(1986)
63=Comanche 4WD-6 Ft. Box(1986)
65=Comanche 4WD-7 Ft. Box(1986)
15=Grand Wagoneer 4 Dr.(1984-86)
25=J-10 Truck 7 Ft. Box(1981-84)
26=J10 Truck 8 Ft. Box(1981-86)
27=J-20 Truck 8 Ft. Box(1981-86)
15=Wagoneer 4 Dr.(1981-83)
75=Wagoneer 4WD-4 Dr.(1984-86)

BODY
CJ=CJ-5, CJ-6, CJ-7, CJ-8, Scrambler(1981-86)
MJ=Comanche Pickup(1986)

STYLES
SJ=Wagoneer(1981-83), Grand Wagoneer(1984-86), Cherokee(1981-83), J-10, J-20(1981-86)
XJ=Wagoneer(1984-86), Cherokee(1984-86)

AR = Use as Required - = Non Illustrated Part P.A.R. = Paint as Required

« RETURN TO GROUP INDEX

COIL--SPARKPLUGS--WIRES 2.5L GM FOUR CYLINDER
Figure 8-5700

81J08 5700

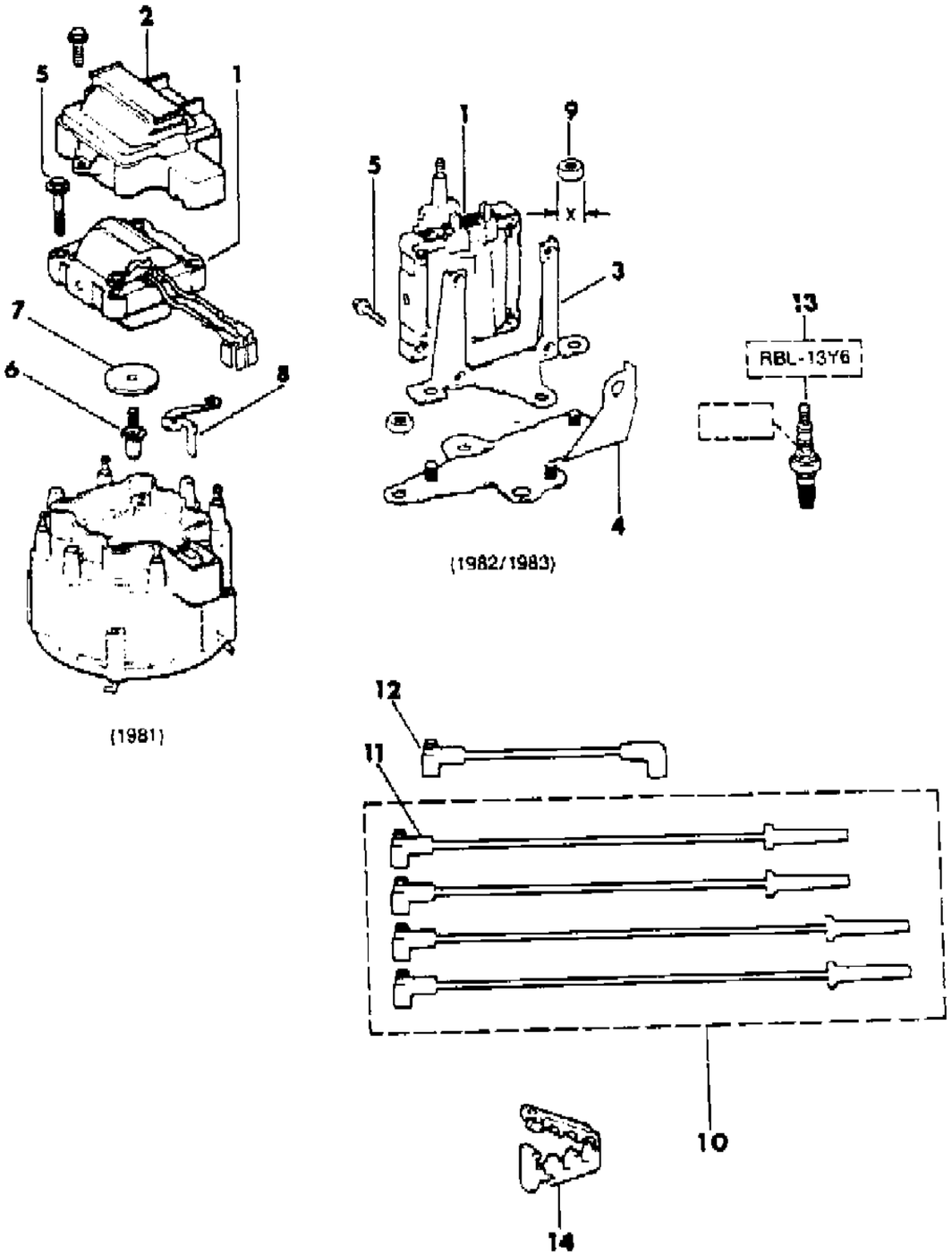

ITEM	PART NUMBER	QTY	BODY	MODEL	DESCRIPTION
1					COIL, Ignition
	J813 1936	1			1981
	J813 4003	1			1982-83
2	J813 1934	1			COVER
3	8350 0385	1			CLAMP
4	J813 4007	1			BRACKET
5					SCREW
	J813 1947	4			1981
	8350 0386	4			1982-83
6	J813 1952	1			BRUSH
7	J813 1954	1			SEAL
8	J813 1944	1			STRAP
9					NUT
	1150 5005	AR			6mm
	1150 1095	AR			8mm
10					WIRE PACKAGE, Ignition ***
	J813 2524	1			1981
	J813 4004	1			1982-83
11					WIRE, Ignition
					1981
	J813 2522	1			#1
	J813 2523	1			#2
	J813 2520	1			#3
	J813 2521	1			#4
12					WIRE, Coil
	J813 4005	1			1982-83
13	J813 2552	4			SPARKPLUG ***
14	J813 2527	4			SEPARATOR, Ignition Wire

MODEL CODES

16=Cherokee 2 Dr.(1981-83)
17=Cherokee 2 Dr.(1981-83)
73=Cherokee 2WD-2 Dr.(1984-86)
74=Cherokee 2WD-4 Dr.(1984-86)
18=Cherokee 4 Dr.(1981-83)
77=Cherokee 4WD-2 Dr.(1984-86)
78=Cherokee 4WD-4 Dr.(1984-86)
85=CJ-5 (1981-83)
86=CJ-6(1981)
87=CJ-7(1981-86)
88=CJ-8, Scrambler(1981-86)
64=Comanche 2WD-6 Ft. Box(1986)
66=Comanche 2WD-7 Ft. Box(1986)
63=Comanche 4WD-6 Ft. Box(1986)
65=Comanche 4WD-7 Ft. Box(1986)
15=Grand Wagoneer 4 Dr.(1984-86)
25=J-10 Truck 7 Ft. Box(1981-84)
26=J10 Truck 8 Ft. Box(1981-86)
27=J-20 Truck 8 Ft. Box(1981-86)
15=Wagoneer 4 Dr.(1981-83)
75=Wagoneer 4WD-4 Dr.(1984-86)

BODY
CJ=CJ-5, CJ-6, CJ-7, CJ-8, Scrambler(1981-86)
MJ=Comanche Pickup(1986)

STYLES
SJ=Wagoneer(1981-83), Grand Wagoneer(1984-86), Cherokee(1981-83), J-10, J-20(1981-86)
XJ=Wagoneer(1984-86), Cherokee(1984-86)

AR = Use as Required - = Non Illustrated Part P.A.R. = Paint as Required

« RETURN TO GROUP INDEX

COIL--SPARKPLUGS--WIRES 2.5L AMC FOUR CYLINDER
Figure 8-5800

81J08 5800

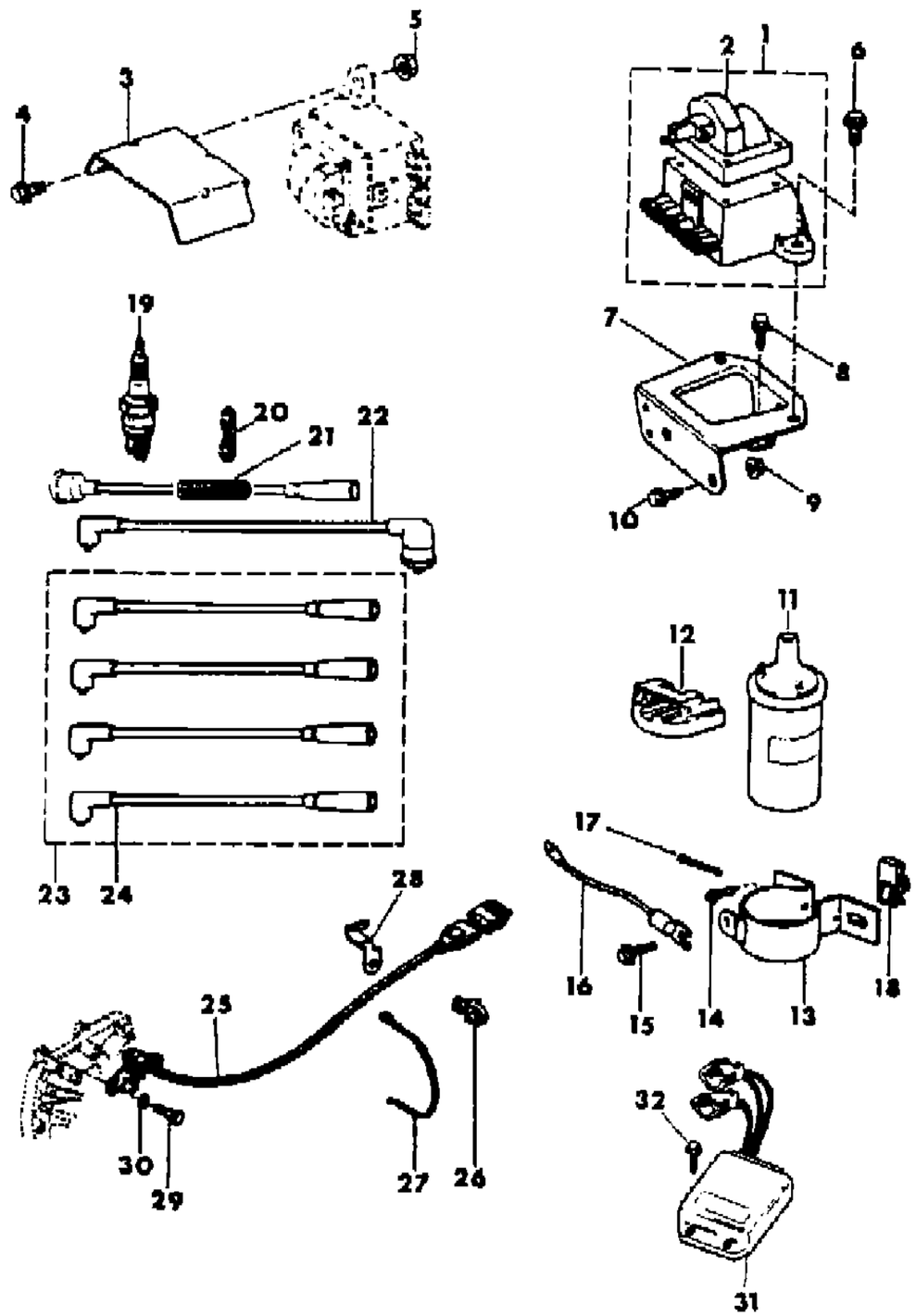

ITEM	PART NUMBER	QTY	BODY	MODEL	DESCRIPTION
1					MODULE, Ignition Coil
	3300 2299	1		XJ,MJ	1986
2					COIL, Ignition
	T103 1135	1		XJ,MJ	1986
3	5600 2673	1			COVER
4	J400 3705	2			BOLT
5	J400 6715	2			NUT
6	J420 0406	2			BOLT
7	5300 2331	1			BRACKET
8	1150 2843	1			BOLT
9	J420 0046	2			NUT
10	1150 4986	2			BOLT
11					COIL, Ignition
	J323 0427	1		CJ	1981-86
	J323 0427	1		XJ,MJ	1984-85
12	J323 0639	1			CONNECTOR
13	J323 0787	1			BRACKET, Coil
14	J400 6985	2			BOLT
15	J940 9106	1			BOLT
16	J322 9510	1			CAPACITOR
17	J999 8329	1			SCREW
18	J400 4208	2			NUT
19					SPARKPLUG ***
	J323 9652	4		CJ	1981-86
	J323 9652	4		XJ,MJ	1984-85
	3300 2750	1		XJ,MJ	1986
20	J324 3095	1			SEPERATOR
21	J324 2860	2			SHIELD
22					WIRE, Coil
	J324 1690	1		CJ	1981-86
	J324 1690	1		XJ,MJ	1984-85
	5300 2157	1		XJ,MJ	1986
23					WIRE PACKAGE, Ignition ***
	8350 0276	1		CJ	1981-86
	8350 0276	1		XJ,MJ	1984-85
	8350 2400	1		XJ,MJ	1986
24	J324 1691	4			WIRE, Ignition
25					SENSOR, Engine Speed
	T134 9559	1		XJ,MJ	

MODEL CODES

16=Cherokee 2 Dr.(1981-83)
17=Cherokee 2 Dr.(1981-83)
73=Cherokee 2WD-2 Dr.(1984-86)
74=Cherokee 2WD-4 Dr.(1984-86)
18=Cherokee 4 Dr.(1981-83)
77=Cherokee 4WD-2 Dr.(1984-86)
78=Cherokee 4WD-4 Dr.(1984-86)
85=CJ-5 (1981-83)
86=CJ-6(1981)
87=CJ-7(1981-86)
88=CJ-8, Scrambler(1981-86)
64=Comanche 2WD-6 Ft. Box(1986)
66=Comanche 2WD-7 Ft. Box(1986)
63=Comanche 4WD-6 Ft. Box(1986)
65=Comanche 4WD-7 Ft. Box(1986)
15=Grand Wagoneer 4 Dr.(1984-86)
25=J-10 Truck 7 Ft. Box(1981-84)
26=J10 Truck 8 Ft. Box(1981-86)
27=J-20 Truck 8 Ft. Box(1981-86)
15=Wagoneer 4 Dr.(1981-83)
75=Wagoneer 4WD-4 Dr.(1984-86)

BODY
CJ=CJ-5, CJ-6, CJ-7, CJ-8, Scrambler(1981-86)
MJ=Comanche Pickup(1986)

STYLES
SJ=Wagoneer(1981-83), Grand Wagoneer(1984-86), Cherokee(1981-83), J-10, J-20(1981-86)
XJ=Wagoneer(1984-86), Cherokee(1984-86)

AR = Use as Required - = Non Illustrated Part P.A.R. = Paint as Required

COIL--SPARKPLUGS--WIRES 2.5L AMC FOUR CYLINDER
Figure 8-5800

81J08 5800

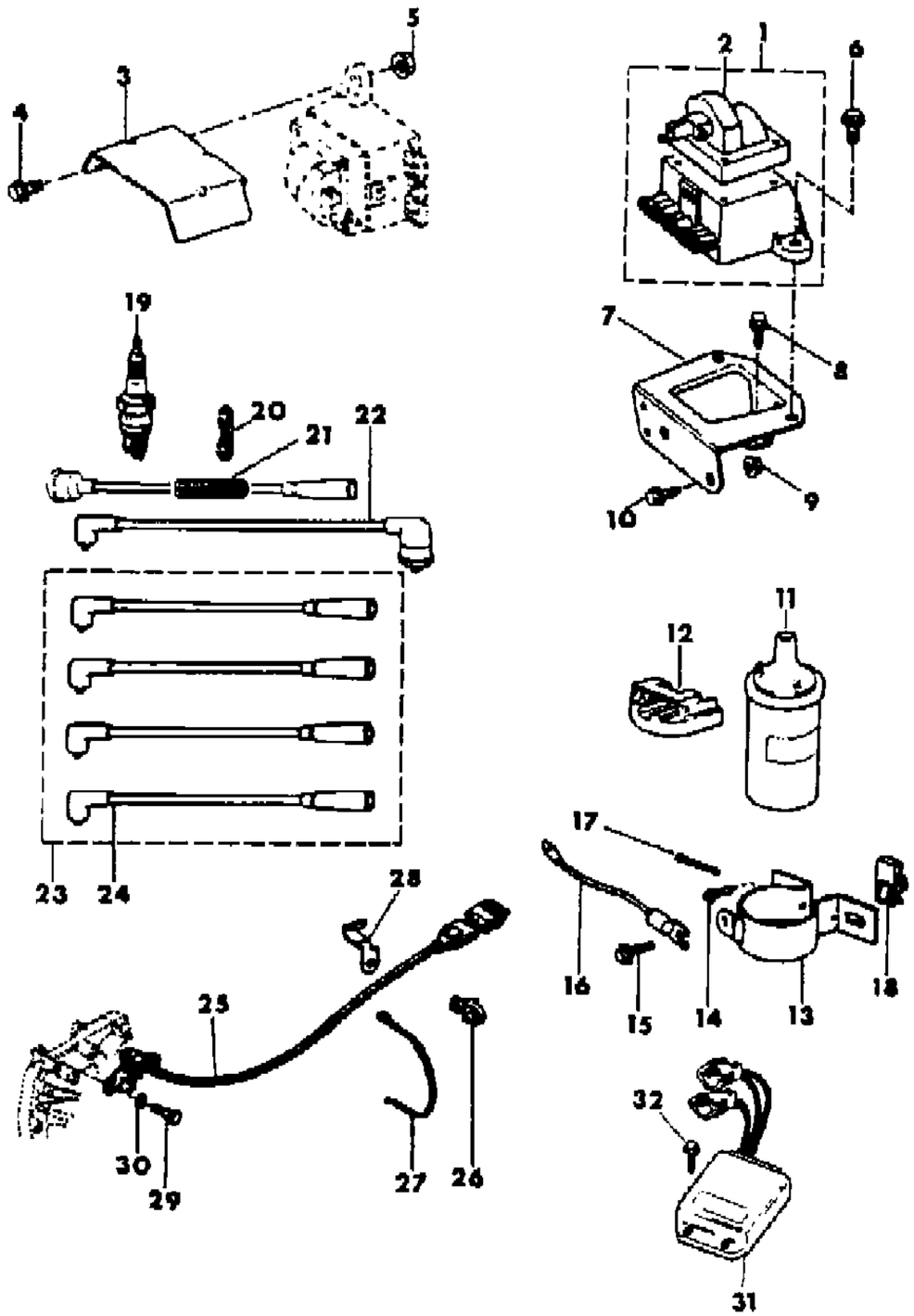

ITEM	PART NUMBER	QTY	BODY	MODEL	DESCRIPTION
	5300 3659	1		XJ,MJ	High Altitude
26	3420 1633	1			CLIP
27	J322 3227	1			STRAP
28	3420 2771	1			CLIP
29	T305 0076	2			BOLT
30	T305 6014	2			WASHER
31					MODULE
	J323 0451	1		CJ	1981-86
	J323 0451	1		XJ,MJ	1984-85
32	J400 5982	2			BOLT

MODEL CODES

16=Cherokee 2 Dr.(1981-83)
17=Cherokee 2 Dr.(1981-83)
73=Cherokee 2WD-2 Dr.(1984-86)
74=Cherokee 2WD-4 Dr.(1984-86)
18=Cherokee 4 Dr.(1981-83)
77=Cherokee 4WD-2 Dr.(1984-86)
78=Cherokee 4WD-4 Dr.(1984-86)
85=CJ-5 (1981-83)
86=CJ-6(1981)
87=CJ-7(1981-86)
88=CJ-8, Scrambler(1981-86)
64=Comanche 2WD-6 Ft. Box(1986)
66=Comanche 2WD-7 Ft. Box(1986)
63=Comanche 4WD-6 Ft. Box(1986)
65=Comanche 4WD-7 Ft. Box(1986)
15=Grand Wagoneer 4 Dr.(1984-86)
25=J-10 Truck 7 Ft. Box(1981-84)
26=J10 Truck 8 Ft. Box(1981-86)
27=J-20 Truck 8 Ft. Box(1981-86)
15=Wagoneer 4 Dr.(1981-83)
75=Wagoneer 4WD-4 Dr.(1984-86)

BODY
CJ=CJ-5, CJ-6, CJ-7, CJ-8, Scrambler(1981-86)
MJ=Comanche Pickup(1986)

STYLES
SJ=Wagoneer(1981-83), Grand Wagoneer(1984-86), Cherokee(1981-83), J-10, J-20(1981-86)
XJ=Wagoneer(1984-86), Cherokee(1984-86)

AR = Use as Required - = Non Illustrated Part P.A.R. = Paint as Required

« RETURN TO GROUP INDEX

COIL--SPARKPLUGS--WIRES 2.8L SIX CYLINDER
Figure 8-5900

81J08 5900

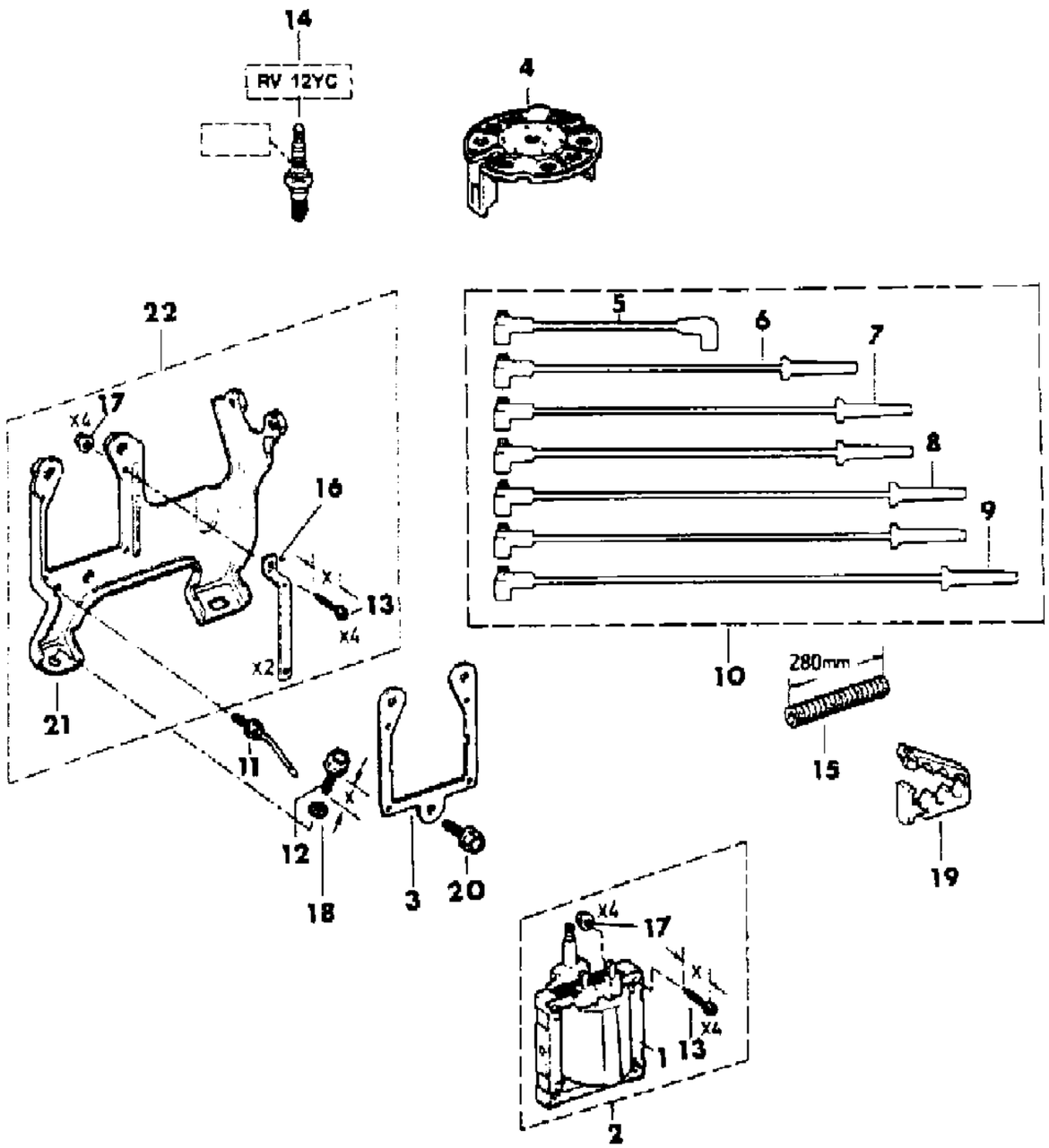

ITEM	PART NUMBER	QTY	BODY	MODEL	DESCRIPTION
1					COIL, Ignition
	J813 4003	1			1984
2					COIL, PACKAGE, Ignition
	8350 1871	1			1985-86
3					BRACKET, Coil
	8350 0938	1			1984
4	8350 0876	1			RETAINER, Plug Wires
5					WIRE, Coil
	8350 0945	1			1984-85
					1986
	8350 0945	1			Engine Serial No. _____T__
	8350 2920	1			Engine Serial No._____U__
6					WIRE, Ignition
	8350 0943	1			1984-85
					1986
	8350 0943	1			Engine Serial No _____T__
	8350 2923	2			Engine Serial No._____U__
7					WIRE, Ignition
	8350 0944	2			1984-85
					1986
	8350 0944	2			Engine Serial No._____T__
	8350 2921	2			Engine Serial No._____U__
8					WIRE, Ignition
	8350 0941	2			1984-85
					1986
	8350 0941	2			Engine Serial No._____T__
	8350 2922	2			Engine Serial No._____U__
9					WIRE, Ignition
	8350 0942	1			1984-85
					1986
	8350 0942	1			Engine Serial No._____T__
10					WIRE SET, Ignition ***
	8350 0946	1			1984-85
					1986
	8350 0946	1			Engine Serial No._____T__
	8350 2919	1			Engine Serial No._____U__
11	8350 0877	1			STUD
12					BOLT
	S150 4595	2			1984

MODEL CODES

16=Cherokee 2 Dr.(1981-83)	78=Cherokee 4WD-4 Dr.(1984-86)	64=Comanche 2WD-6 Ft. Box(1986)	25=J-10 Truck 7 Ft. Box(1981-84)
17=Cherokee 2 Dr.(1981-83)	85=CJ-5 (1981-83)	66=Comanche 2WD-7 Ft. Box(1986)	26=J10 Truck 8 Ft. Box(1981-86)
73=Cherokee 2WD-2 Dr.(1984-86)	86=CJ-6(1981)	63=Comanche 4WD-6 Ft. Box(1986)	27=J-20 Truck 8 Ft. Box(1981-86)
74=Cherokee 2WD-4 Dr.(1984-86)	87=CJ-7(1981-86)	65=Comanche 4WD-7 Ft. Box(1986)	15=Wagoneer 4 Dr.(1981-83)
18=Cherokee 4 Dr.(1981-83)	88=CJ-8, Scrambler(1981-86)	15=Grand Wagoneer 4 Dr.(1984-86)	75=Wagoneer 4WD-4 Dr.(1984-86)
77=Cherokee 4WD-2 Dr.(1984-86)			

BODY
CJ=CJ-5, CJ-6, CJ-7, CJ-8, Scrambler(1981-86)
MJ=Comanche Pickup(1986)

STYLES
SJ=Wagoneer(1981-83), Grand Wagoneer(1984-86), Cherokee(1981-83), J-10, J-20(1981-86)
XJ=Wagoneer(1984-86), Cherokee(1984-86)

AR = Use as Required - = Non Illustrated Part P.A.R. = Paint as Required

COIL--SPARKPLUGS--WIRES 2.8L SIX CYLINDER
Figure 8-5900

81J08 5900

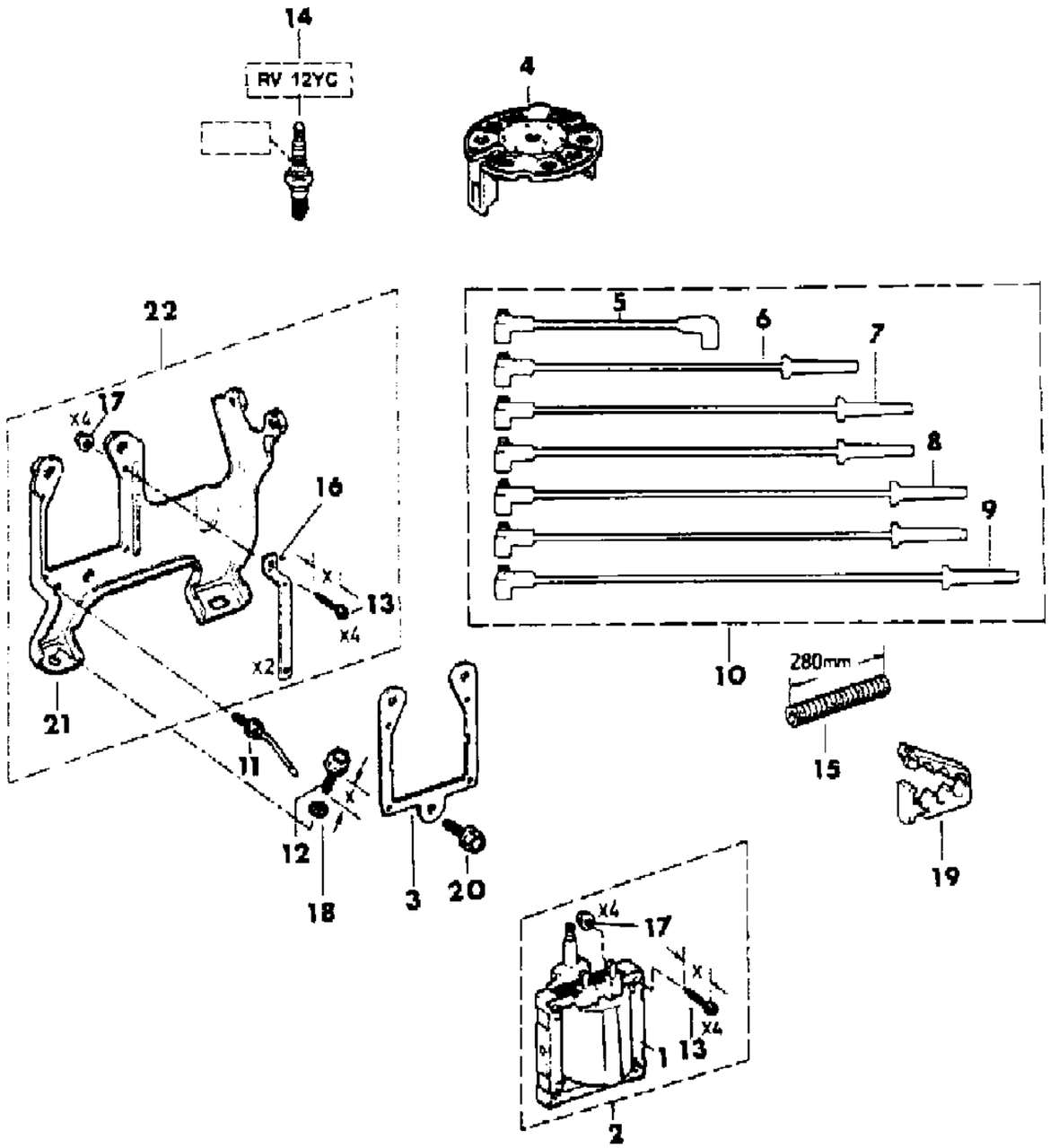

ITEM	PART NUMBER	QTY	BODY	MODEL	DESCRIPTION
	3420 1868	2			1985-86
13					BOLT
	S150 2971	2			13mm
	S150 7041	2			30mm
14	8350 0411	6			SPARKPLUG ***
15	3300 1774	AR			SHIELD, Ignition Wire
16					BRACKET, Coil
	8350 2090	2			1985-86
17					NUT
	3420 1461	4			1985-86
18	J420 0326	2			WASHER
19	8350 2363	AR			SEPERATOR, Ignition Wire
20	S150 2670	3			BOLT
21					BRACKET, Coil
	8350 0940	1			1984
22					BRACKET PACKAGE, Coil ***
	8350 2089	1			1985

MODEL CODES
16=Cherokee 2 Dr.(1981-83)
17=Cherokee 2 Dr.(1981-83)
73=Cherokee 2WD-2 Dr.(1984-86)
74=Cherokee 2WD-4 Dr.(1984-86)
18=Cherokee 4 Dr.(1981-83)
77=Cherokee 4WD-2 Dr.(1984-86)
78=Cherokee 4WD-4 Dr.(1984-86)
85=CJ-5 (1981-83)
86=CJ-6(1981)
87=CJ-7(1981-86)
88=CJ-8, Scrambler(1981-86)
64=Comanche 2WD-6 Ft. Box(1986)
66=Comanche 2WD-7 Ft. Box(1986)
63=Comanche 4WD-6 Ft. Box(1986)
65=Comanche 4WD-7 Ft. Box(1986)
15=Grand Wagoneer 4 Dr.(1984-86)
25=J-10 Truck 7 Ft. Box(1981-84)
26=J10 Truck 8 Ft. Box(1981-86)
27=J-20 Truck 8 Ft. Box(1981-86)
15=Wagoneer 4 Dr.(1981-83)
75=Wagoneer 4WD-4 Dr.(1984-86)

BODY
CJ=CJ-5, CJ-6, CJ-7, CJ-8, Scrambler(1981-86)
MJ=Comanche Pickup(1986)

STYLES
SJ=Wagoneer(1981-83), Grand Wagoneer(1984-86), Cherokee(1981-83), J-10, J-20(1981-86)
XJ=Wagoneer(1984-86), Cherokee(1984-86)

AR = Use as Required - = Non Illustrated Part P.A.R. = Paint as Required

« RETURN TO GROUP INDEX

COIL--SPARKPLUGS--WIRES 4.2L SIX CYLINDER
Figure 8-6000

81J08 6000

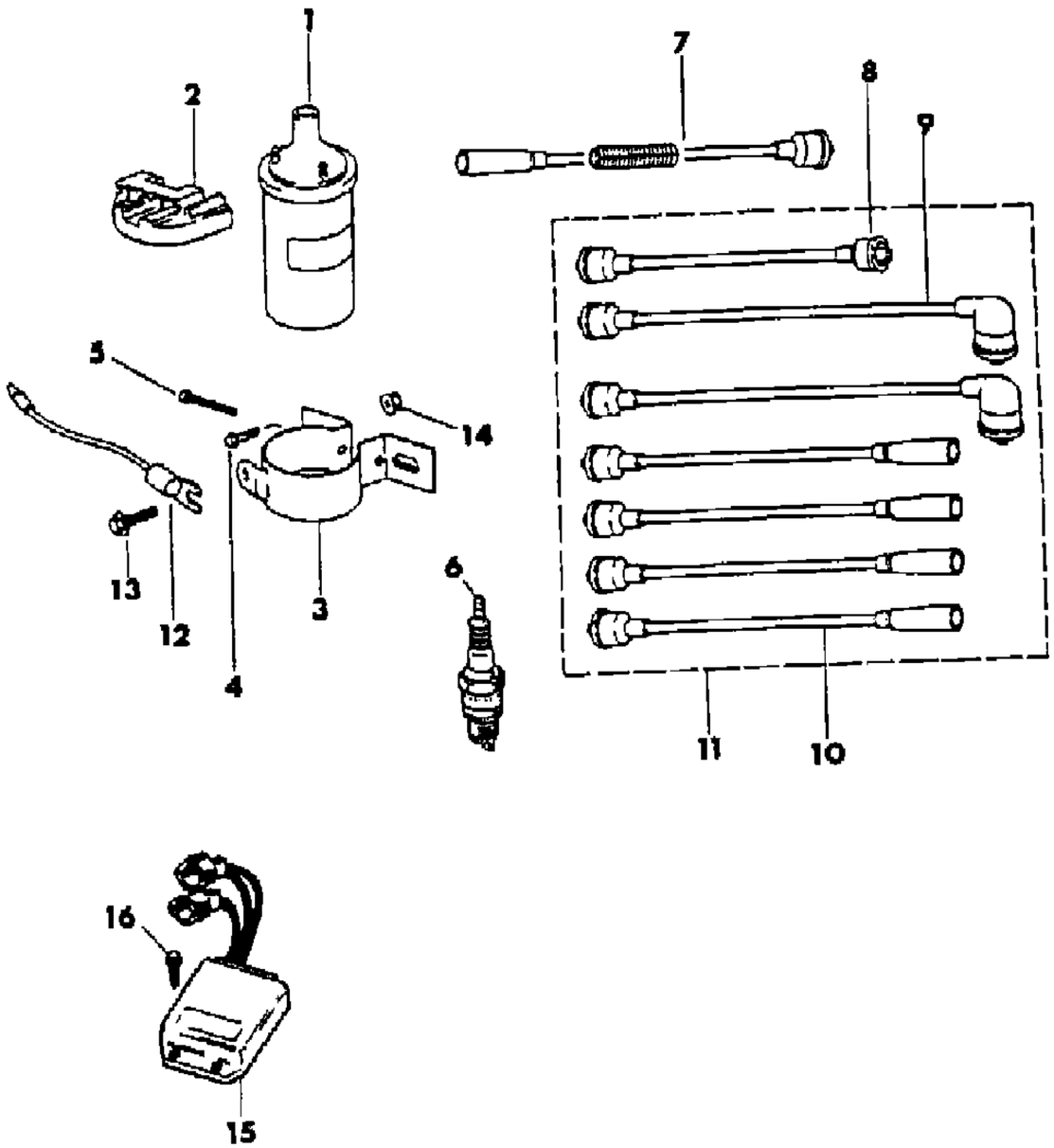

ITEM	PART NUMBER	QTY	BODY	MODEL	DESCRIPTION
1	J323 0427	1			COIL, Ignition
2	J323 0639	1			CONNECTOR
3	J323 0787	1			BRACKET, Coil
4	J400 6708	2			BOLT
5	J813 0952	1			SCREW
6	J323 9652	6			SPARK PLUG
7	J324 2850	1			SHIELD, Ignition Wire
8	J324 1155	1			WIRE, Coil
9	J324 1151	2			WIRE, Ignition
10	J324 1154	4			WIRE, Ignition
11	J813 4371	1			WIRE SET, Ignition ***
12	J322 9510	1			CAPACITOR, Ignition
13	J940 9106	1			SCREW
14		1			NUT
15					MODULE, Ignition
	J323 0451	1			1981
					1982
	J323 0451	1			49 State
	J324 0826	1			Calif.
	J323 0451	1			1983-86
16	J400 5982	3			BOLT

MODEL CODES
16=Cherokee 2 Dr.(1981-83)
17=Cherokee 2 Dr.(1981-83)
73=Cherokee 2WD-2 Dr.(1984-86)
74=Cherokee 2WD-4 Dr.(1984-86)
18=Cherokee 4 Dr.(1981-83)
77=Cherokee 4WD-2 Dr.(1984-86)
78=Cherokee 4WD-4 Dr.(1984-86)
85=CJ-5 (1981-83)
86=CJ-6(1981)
87=CJ-7(1981-86)
88=CJ-8, Scrambler(1981-86)
64=Comanche 2WD-6 Ft. Box(1986)
66=Comanche 2WD-7 Ft. Box(1986)
63=Comanche 4WD-6 Ft. Box(1986)
65=Comanche 4WD-7 Ft. Box(1986)
15=Grand Wagoneer 4 Dr.(1984-86)
25=J-10 Truck 7 Ft. Box(1981-84)
26=J10 Truck 8 Ft. Box(1981-86)
27=J-20 Truck 8 Ft. Box(1981-86)
15=Wagoneer 4 Dr.(1981-83)
75=Wagoneer 4WD-4 Dr.(1984-86)

BODY
CJ=CJ-5, CJ-6, CJ-7, CJ-8, Scrambler(1981-86)
MJ=Comanche Pickup(1986)

STYLES
SJ=Wagoneer(1981-83), Grand Wagoneer(1984-86), Cherokee(1981-83), J-10, J-20(1981-86)
XJ=Wagoneer(1984-86), Cherokee(1984-86)

AR = Use as Required - = Non Illustrated Part P.A.R. = Paint as Required

« RETURN TO GROUP INDEX

COIL--SPARKPLUGS--WIRES 5.9L EIGHT CYLINDER
Figure 8-6100

81J08 6100

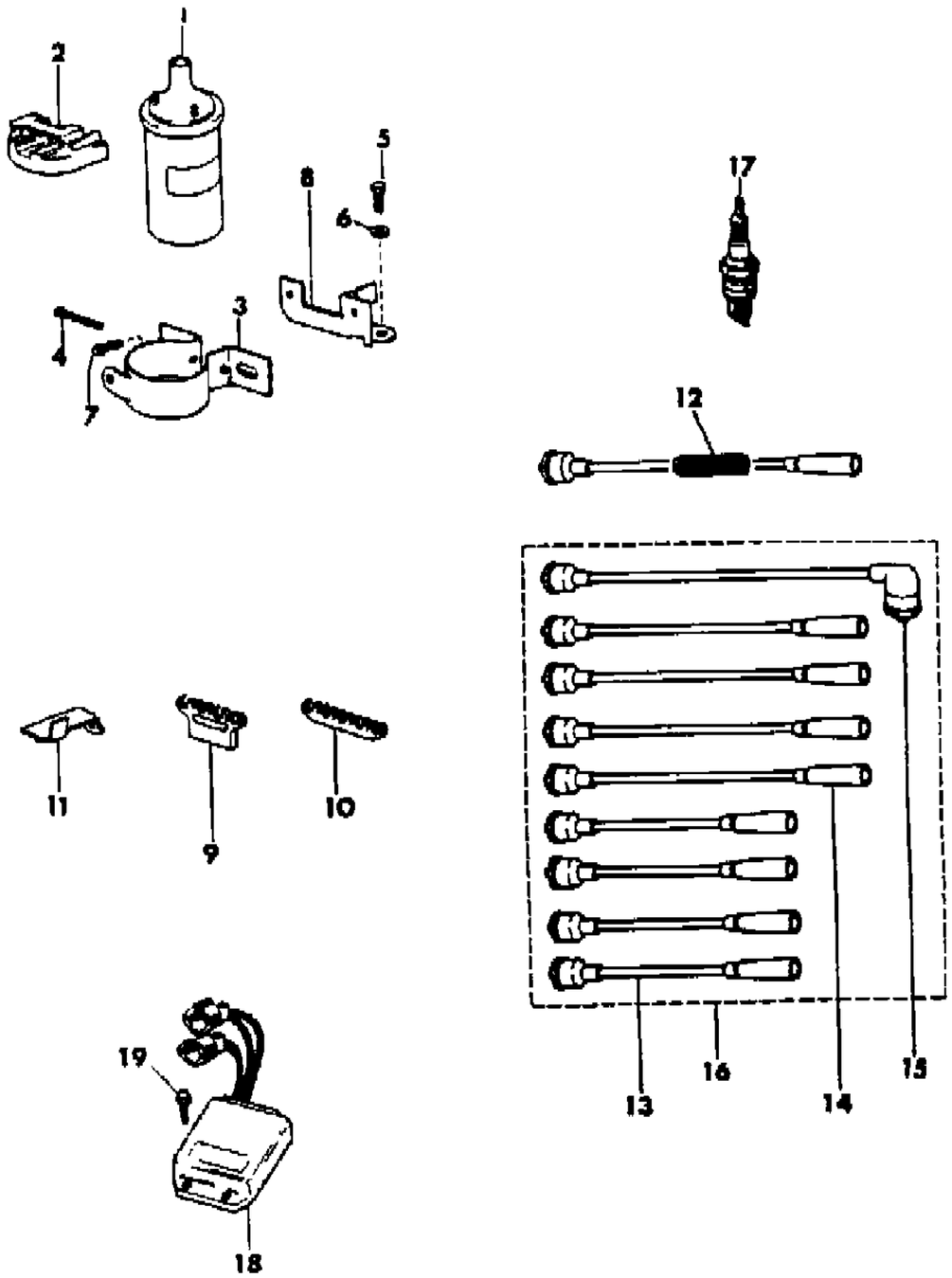

ITEM	PART NUMBER	QTY	BODY	MODEL	DESCRIPTION
1	J323 0427	1			COIL, Ignition
2	J323 0639	1			CONNECTOR
3	J323 0787	1			BRACKET, Coil
4	J813 0952	1			SCREW
5	J942 8638	1			BOLT
6	J400 3808	1			WASHER
7	J027 1444	2			BOLT
8	J322 8268	1			BRACKET
9	J318 0107	3			SEPARATOR
10	J318 6116	1			SEPARATOR
11	J322 6495	1			BRACKET
12	J324 2850	1			SHIELD, Ignition Wire
13	J322 5808	4			WIRE, Ignition
14	J322 5810	4			WIRE, Ignition
15	J323 1901	1			WIRE, Coil
16	J812 9048	1			WIRE SET, Ignition ***
17					SPARKPLUG ***
	J318 9066	8			N-12Y
	J318 9507	8			RN-12Y
	J324 2841	8			RN-12YC
18					MODULE, Ignition
	J323 0451	1			1981
					1982
	J323 0451	1			49 State
	J324 0826	1			Calif.
	J324 0451	1			1983-86

MODEL CODES

16=Cherokee 2 Dr.(1981-83)
17=Cherokee 2 Dr.(1981-83)
73=Cherokee 2WD-2 Dr.(1984-86)
74=Cherokee 2WD-4 Dr.(1984-86)
18=Cherokee 4 Dr.(1981-83)
77=Cherokee 4WD-2 Dr.(1984-86)
78=Cherokee 4WD-4 Dr.(1984-86)
85=CJ-5 (1981-83)
86=CJ-6(1981)
87=CJ-7(1981-86)
88=CJ-8, Scrambler(1981-86)
64=Comanche 2WD-6 Ft. Box(1986)
66=Comanche 2WD-7 Ft. Box(1986)
63=Comanche 4WD-6 Ft. Box(1986)
65=Comanche 4WD-7 Ft. Box(1986)
15=Grand Wagoneer 4 Dr.(1984-86)
25=J-10 Truck 7 Ft. Box(1981-84)
26=J10 Truck 8 Ft. Box(1981-86)
27=J-20 Truck 8 Ft. Box(1981-86)
15=Wagoneer 4 Dr.(1981-83)
75=Wagoneer 4WD-4 Dr.(1984-86)

BODY
CJ=CJ-5, CJ-6, CJ-7, CJ-8, Scrambler(1981-86)
MJ=Comanche Pickup(1986)

STYLES
SJ=Wagoneer(1981-83), Grand Wagoneer(1984-86), Cherokee(1981-83), J-10, J-20(1981-86)
XJ=Wagoneer(1984-86), Cherokee(1984-86)

AR = Use as Required - = Non Illustrated Part P.A.R. = Paint as Required

« RETURN TO GROUP INDEX

GLOWPLUG CONTROL DIESEL CJ-5,6,7,8, SCRAMBLER
Figure 8-6200

81J08 6200

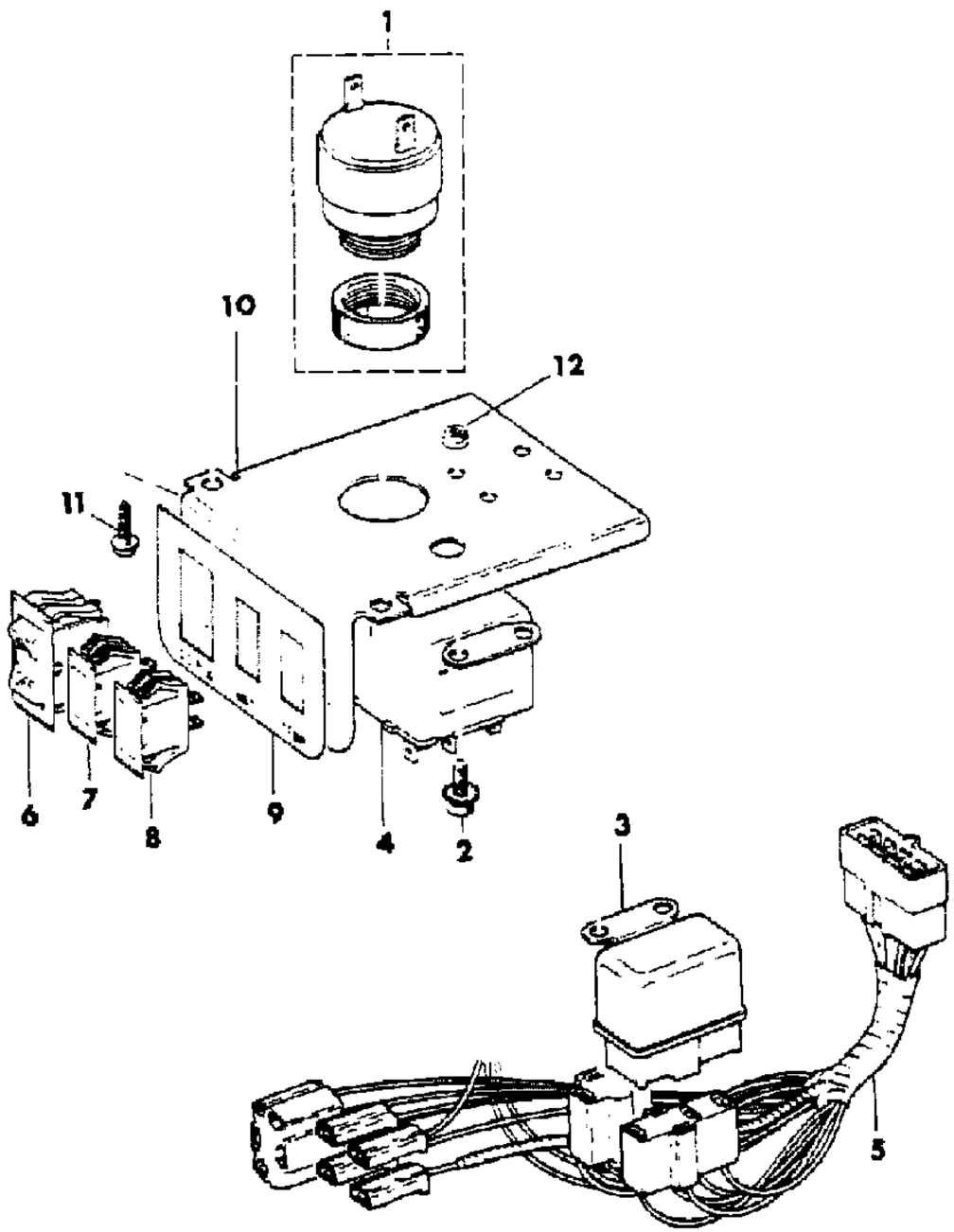

ITEM	PART NUMBER	QTY	BODY	MODEL	DESCRIPTION
1	J575 1952	1			BUZZER
2	J018 8749	4			SCREW
3					RELAY
	J575 2304	1			1981-85: Isuzu
	J575 2417	1			1986: Renault
4					TIMER
	J575 8586	1			1981-85: Isuzu
	J576 4631	1			1986: Renault
5					WIRING, Glow Plug Control
	J813 3786	1			1981-85: Isuzu
6					SWITCH
	J575 2346	1			1981-85: Isuzu
7					LAMP
	J575 2345	1			1981-85: Isuzu, Amber
8					LAMP
	J575 2344	1			1981-85: Isuzu, Red
9					OVERLAY ***
	J575 2380	1			1981-85: Isuzu
10					BRACKET
	J575 2353	1			1981-85: Isuzu
	J576 2521	1			1986: Renault
11	J400 4426	2			SCREW
12	J400 5699	4			NUT

MODEL CODES

16=Cherokee 2 Dr.(1981-83)
17=Cherokee 2 Dr.(1981-83)
73=Cherokee 2WD-2 Dr.(1984-86)
74=Cherokee 2WD-4 Dr.(1984-86)
18=Cherokee 4 Dr.(1981-83)
77=Cherokee 4WD-2 Dr.(1984-86)
78=Cherokee 4WD-4 Dr.(1984-86)
85=CJ-5 (1981-83)
86=CJ-6(1981)
87=CJ-7(1981-86)
88=CJ-8, Scrambler(1981-86)
64=Comanche 2WD-6 Ft. Box(1986)
66=Comanche 2WD-7 Ft. Box(1986)
63=Comanche 4WD-6 Ft. Box(1986)
65=Comanche 4WD-7 Ft. Box(1986)
15=Grand Wagoneer 4 Dr.(1984-86)
25=J-10 Truck 7 Ft. Box(1981-84)
26=J10 Truck 8 Ft. Box(1981-86)
27=J-20 Truck 8 Ft. Box(1981-86)
15=Wagoneer 4 Dr.(1981-83)
75=Wagoneer 4WD-4 Dr.(1984-86)

BODY
CJ=CJ-5, CJ-6, CJ-7, CJ-8, Scrambler(1981-86)
MJ=Comanche Pickup(1986)

STYLES
SJ=Wagoneer(1981-83), Grand Wagoneer(1984-86), Cherokee(1981-83), J-10, J-20(1981-86)
XJ=Wagoneer(1984-86), Cherokee(1984-86)

AR = Use as Required - = Non Illustrated Part P.A.R. = Paint as Required

« RETURN TO GROUP INDEX

HORNS ALL
Figure 8-6300

81J08 6300

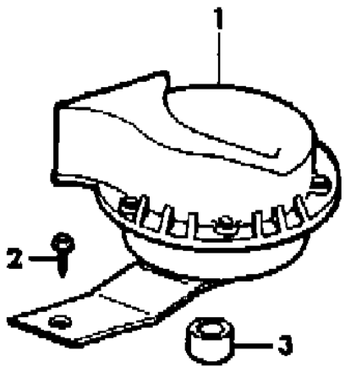

CJ, SCRAMBLER

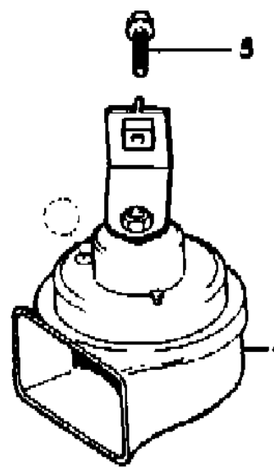

CHEROKEE, WAGONEER, COMANCHE

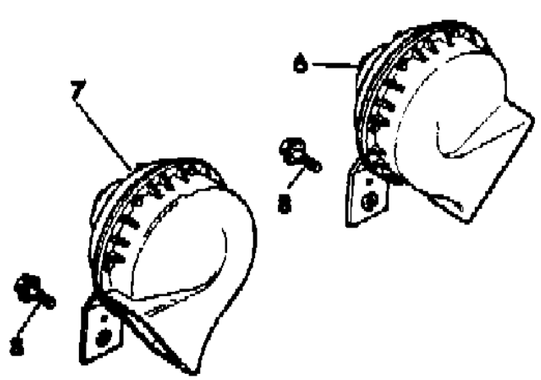

GRAND WAGONEER, J-10, J-20

ITEM	PART NUMBER	QTY	BODY	MODEL	DESCRIPTION
1					HORN
	J546 4492	1		CJ	
					EXPORT
	J547 0001	1		CJ	Hi-Tone
	J547 0002	1		CJ	Lo-Tone
2	J400 4801	1		CJ	BOLT
3	J546 1837	1		CJ	BUMPER
4					HORN
					HI-TONE
	5600 1134	1		XJ,MJ	
	5600 1317	1		XJ,MJ	Economic Commission of Europe
					LO-TONE
	5600 0912	1		XJ,MJ	
	5600 1316	1		XJ,MJ	Economic Commission of Europe
5	3420 1793	2			BOLT
6					HORN, Hi-Tone
	J546 4491	1		SJ	
	J547 0001	1		SJ	EXPORT
7					HORN, LoTone
	J546 4492	1		SJ	
	J547 0002	1		SJ	EXPORT
8	J420 0406	2		SJ	BOLT

MODEL CODES

16=Cherokee 2 Dr.(1981-83)	78=Cherokee 4WD-4 Dr.(1984-86)	64=Comanche 2WD-6 Ft. Box(1986)	25=J-10 Truck 7 Ft. Box(1981-84)
17=Cherokee 2 Dr.(1981-83)	85=CJ-5 (1981-83)	66=Comanche 2WD-7 Ft. Box(1986)	26=J10 Truck 8 Ft. Box(1981-86)
73=Cherokee 2WD-2 Dr.(1984-86)	86=CJ-6(1981)	63=Comanche 4WD-6 Ft. Box(1986)	27=J-20 Truck 8 Ft. Box(1981-86)
74=Cherokee 2WD-4 Dr.(1984-86)	87=CJ-7(1981-86)	65=Comanche 4WD-7 Ft. Box(1986)	15=Wagoneer 4 Dr.(1981-83)
18=Cherokee 4 Dr.(1981-83)	88=CJ-8, Scrambler(1981-86)	15=Grand Wagoneer 4 Dr.(1984-86)	75=Wagoneer 4WD-4 Dr.(1984-86)
77=Cherokee 4WD-2 Dr.(1984-86)			

BODY
CJ=CJ-5, CJ-6, CJ-7, CJ-8, Scrambler(1981-86)
MJ=Comanche Pickup(1986)

STYLES
SJ=Wagoneer(1981-83), Grand Wagoneer(1984-86), Cherokee(1981-83), J-10, J-20(1981-86)
XJ=Wagoneer(1984-86), Cherokee(1984-86)

AR = Use as Required - = Non Illustrated Part P.A.R. = Paint as Required

« RETURN TO GROUP INDEX

LAMPS--FRONT U.S. AND CANADA CJ-5,6,7,8, SCRAMBLER
Figure 8-6400

81J08 6400

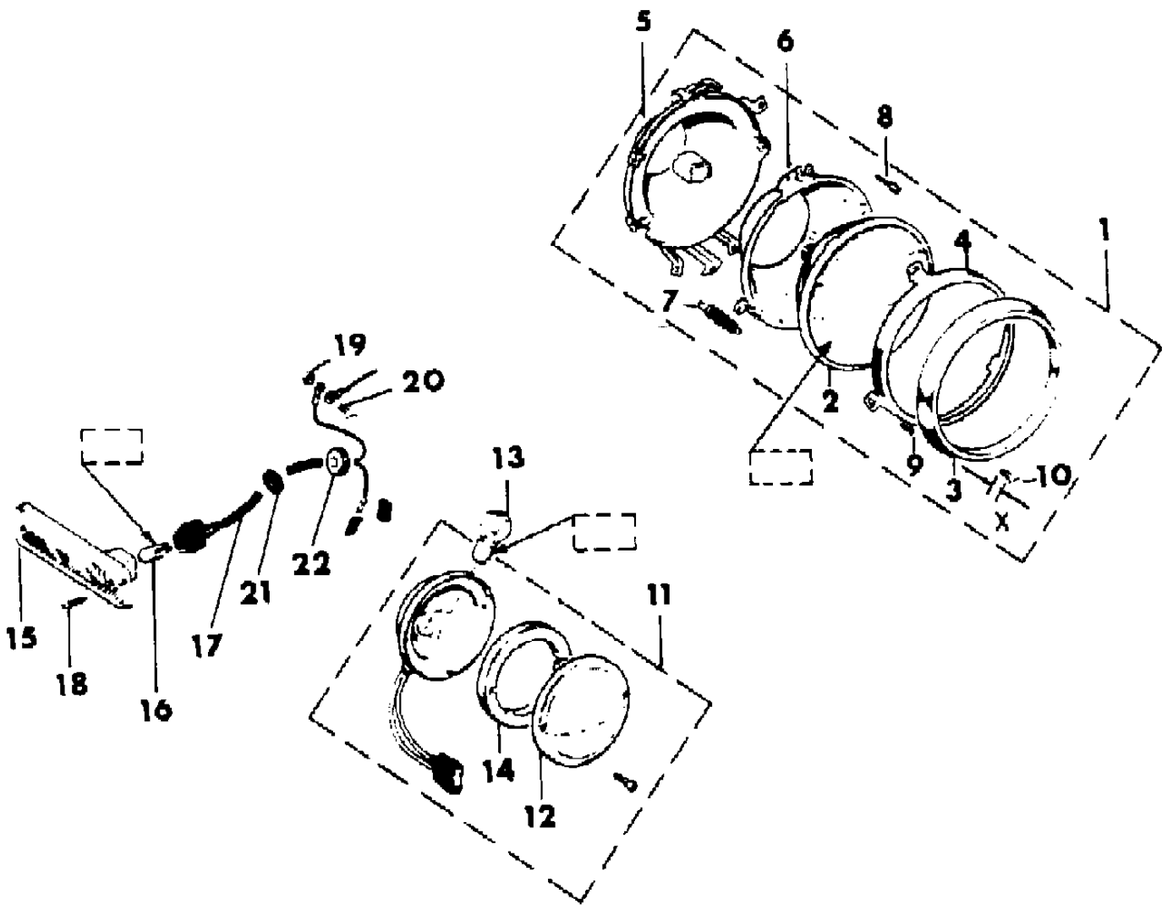

ITEM	PART NUMBER	QTY	BODY	MODEL	DESCRIPTION
1					HEADLAMP ASSEMBLY
	J099 8972	2			"6014"
	J575 6976	2			"H6014"
2					HEADLAMP, Seal Beam
	J812 4687	2			"6014"
	J813 3093	2			"H6014"
3	J546 0087	2			BEZEL
4	J812 8749	2			RING
5	J812 1350	2			HOUSING
6	J812 1351	2			SHELL ***
7	J320 5364	2			SPRING
8	J090 8577	4			SCREW
9	S045 0211	6			SCREW
10					SCREW
	S017 9349	2			.62"
	J400 5821	2			.75"
11	J575 2771	2			LAMP, Park and Turn
12	J812 7449	2			LENS
13	J999 7451	2			BULB, "1157"
14	J812 7448	2			GASKET
15	J099 4020	2			LAMP, Marker
16	J099 4037	2			BULB, "194"
17	J448 9395	2			CABLE
18	J098 5199	4			SCREW
19	J012 0361	2			NUT
20	J045 4783	2			SCREW
21	J092 9814	4			GROMMET
22	J081 9305	2			GROMMET
23	J400 5806	4			SCREW

MODEL CODES
16=Cherokee 2 Dr.(1981-83)
17=Cherokee 2 Dr.(1981-83)
73=Cherokee 2WD-2 Dr.(1984-86)
74=Cherokee 2WD-4 Dr.(1984-86)
18=Cherokee 4 Dr.(1981-83)
77=Cherokee 4WD-2 Dr.(1984-86)
78=Cherokee 4WD-4 Dr.(1984-86)
85=CJ-5 (1981-83)
86=CJ-6(1981)
87=CJ-7(1981-86)
88=CJ-8, Scrambler(1981-86)
64=Comanche 2WD-6 Ft. Box(1986)
66=Comanche 2WD-7 Ft. Box(1986)
63=Comanche 4WD-6 Ft. Box(1986)
65=Comanche 4WD-7 Ft. Box(1986)
15=Grand Wagoneer 4 Dr.(1984-86)
25=J-10 Truck 7 Ft. Box(1981-84)
26=J10 Truck 8 Ft. Box(1981-86)
27=J-20 Truck 8 Ft. Box(1981-86)
15=Wagoneer 4 Dr.(1981-83)
75=Wagoneer 4WD-4 Dr.(1984-86)

BODY
CJ=CJ-5, CJ-6, CJ-7, CJ-8, Scrambler(1981-86)
MJ=Comanche Pickup(1986)

STYLES
SJ=Wagoneer(1981-83), Grand Wagoneer(1984-86), Cherokee(1981-83), J-10, J-20(1981-86)
XJ=Wagoneer(1984-86), Cherokee(1984-86)

AR = Use as Required - = Non Illustrated Part P.A.R. = Paint as Required

« RETURN TO GROUP INDEX

LAMPS--FRONT EXPORT EXCEPT JAPAN CJ-5,6,7,8, SCRAMBLER
Figure 8-6500

81J08 6500

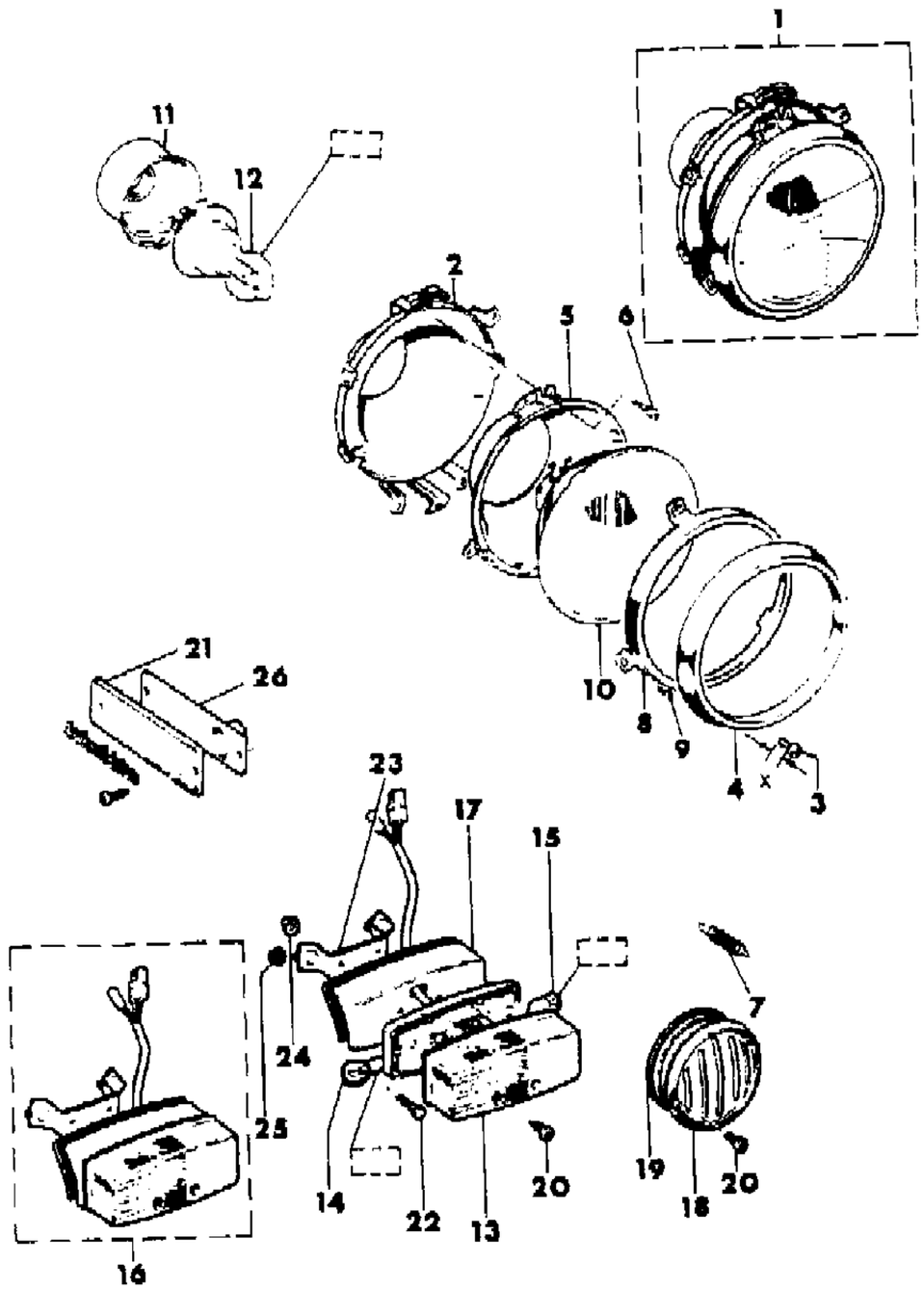

ITEM	PART NUMBER	QTY	BODY	MODEL	DESCRIPTION
1					HEADLAMP ASSEMBLY
	J575 8743	2			Left Hand Drive
	J575 8715	2			Right Hand Drive
	J575 8234	2			France
2	J812 1350	2			HOUSING
3					SCREW
	S017 9349	2			.62"
	J400 5821	2			.75"
4	J546 0087	2			BEZEL
5	J812 1351	2			SHELL ***
6	J090 8577	4			SCREW
7	J320 5364	2			SPRING
8	J812 8749	2			RING
9	S045 0211	6			SCREW
10					HEADLAMP
	J813 3776	2			Left Hand Drive
	J813 3775	2			Right Hand Drive
	J813 3777	2			France
11	J813 3795	2			BOOT
12					BULB
	J813 3772	2			"H4 Clear"
	J813 3336	2			"H4 Amber"
13					LENS, Park and Turn
	J813 3788	1			Right
	J813 3789	1			Left
14	J575 7455	2			BULB, "P25-1"
15	J813 3773	2			BULB, "R19-10"
16					LAMP, Park and Turn
	J575 8802	1			Right
	J575 8803	1			Left
17	J575 8110	2			BASE
18	J575 8358	2			COVER
19	J575 8357	2			GASKET
20	J400 5806	4			SCREW
21	J575 8207	2			BEZEL
22	J400 3924	4			BOLT
23	J575 8199	2			BRACKET
24	J027 1163	4			NUT
25	S027 3801	4			NUT

MODEL CODES
16=Cherokee 2 Dr.(1981-83)
17=Cherokee 2 Dr.(1981-83)
73=Cherokee 2WD-2 Dr.(1984-86)
74=Cherokee 2WD-4 Dr.(1984-86)
18=Cherokee 4 Dr.(1981-83)
77=Cherokee 4WD-2 Dr.(1984-86)
78=Cherokee 4WD-4 Dr.(1984-86)
85=CJ-5 (1981-83)
86=CJ-6(1981)
87=CJ-7(1981-86)
88=CJ-8, Scrambler(1981-86)
64=Comanche 2WD-6 Ft. Box(1986)
66=Comanche 2WD-7 Ft. Box(1986)
63=Comanche 4WD-6 Ft. Box(1986)
65=Comanche 4WD-7 Ft. Box(1986)
15=Grand Wagoneer 4 Dr.(1984-86)
25=J-10 Truck 7 Ft. Box(1981-84)
26=J10 Truck 8 Ft. Box(1981-86)
27=J-20 Truck 8 Ft. Box(1981-86)
15=Wagoneer 4 Dr.(1981-83)
75=Wagoneer 4WD-4 Dr.(1984-86)

BODY
CJ=CJ-5, CJ-6, CJ-7, CJ-8, Scrambler(1981-86)
MJ=Comanche Pickup(1986)

STYLES
SJ=Wagoneer(1981-83), Grand Wagoneer(1984-86), Cherokee(1981-83), J-10, J-20(1981-86)
XJ=Wagoneer(1984-86), Cherokee(1984-86)

AR = Use as Required - = Non Illustrated Part P.A.R. = Paint as Required

81J08 6500

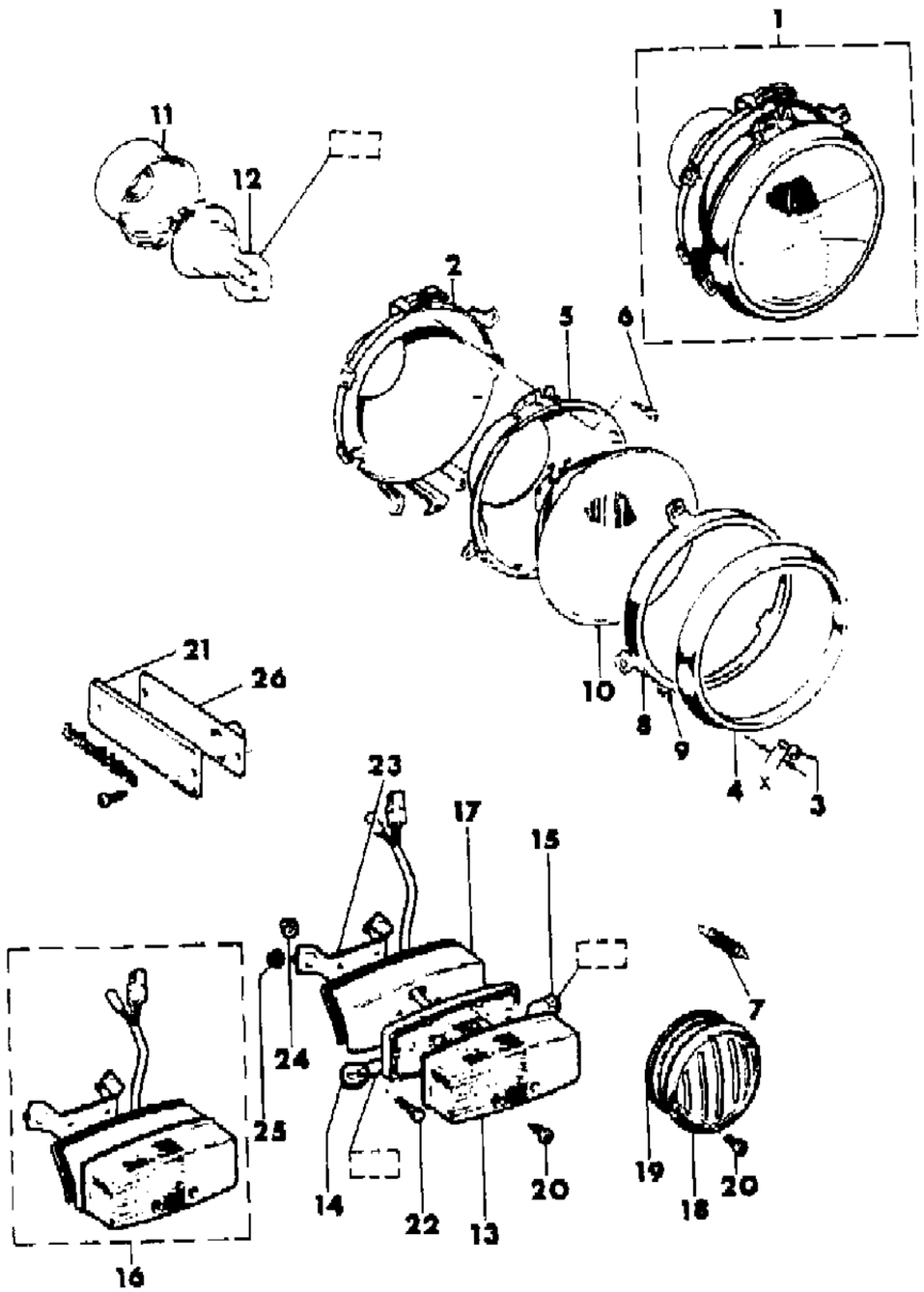

ITEM	PART NUMBER	QTY	BODY	MODEL	DESCRIPTION
26	J575 8206	2			PLATE

MODEL CODES

16=Cherokee 2 Dr.(1981-83)	78=Cherokee 4WD-4 Dr.(1984-86)	64=Comanche 2WD-6 Ft. Box(1986)	25=J-10 Truck 7 Ft. Box(1981-84)
17=Cherokee 2 Dr.(1981-83)	85=CJ-5 (1981-83)	66=Comanche 2WD-7 Ft. Box(1986)	26=J10 Truck 8 Ft. Box(1981-86)
73=Cherokee 2WD-2 Dr.(1984-86)	86=CJ-6(1981)	63=Comanche 4WD-6 Ft. Box(1986)	27=J-20 Truck 8 Ft. Box(1981-86)
74=Cherokee 2WD-4 Dr.(1984-86)	87=CJ-7(1981-86)	65=Comanche 4WD-7 Ft. Box(1986)	15=Wagoneer 4 Dr.(1981-83)
18=Cherokee 4 Dr.(1981-83)	88=CJ-8, Scrambler(1981-86)	15=Grand Wagoneer 4 Dr.(1984-86)	75=Wagoneer 4WD-4 Dr.(1984-86)
77=Cherokee 4WD-2 Dr.(1984-86)			

BODY
CJ=CJ-5, CJ-6, CJ-7, CJ-8, Scrambler(1981-86)
MJ=Comanche Pickup(1986)

STYLES
SJ=Wagoneer(1981-83), Grand Wagoneer(1984-86), Cherokee(1981-83), J-10, J-20(1981-86)
XJ=Wagoneer(1984-86), Cherokee(1984-86)

AR = Use as Required - = Non Illustrated Part P.A.R. = Paint as Required

LAMPS--FRONT JAPAN CJ-5,6,7,8, SCRAMBLER
Figure 8-6600

81J08 6600

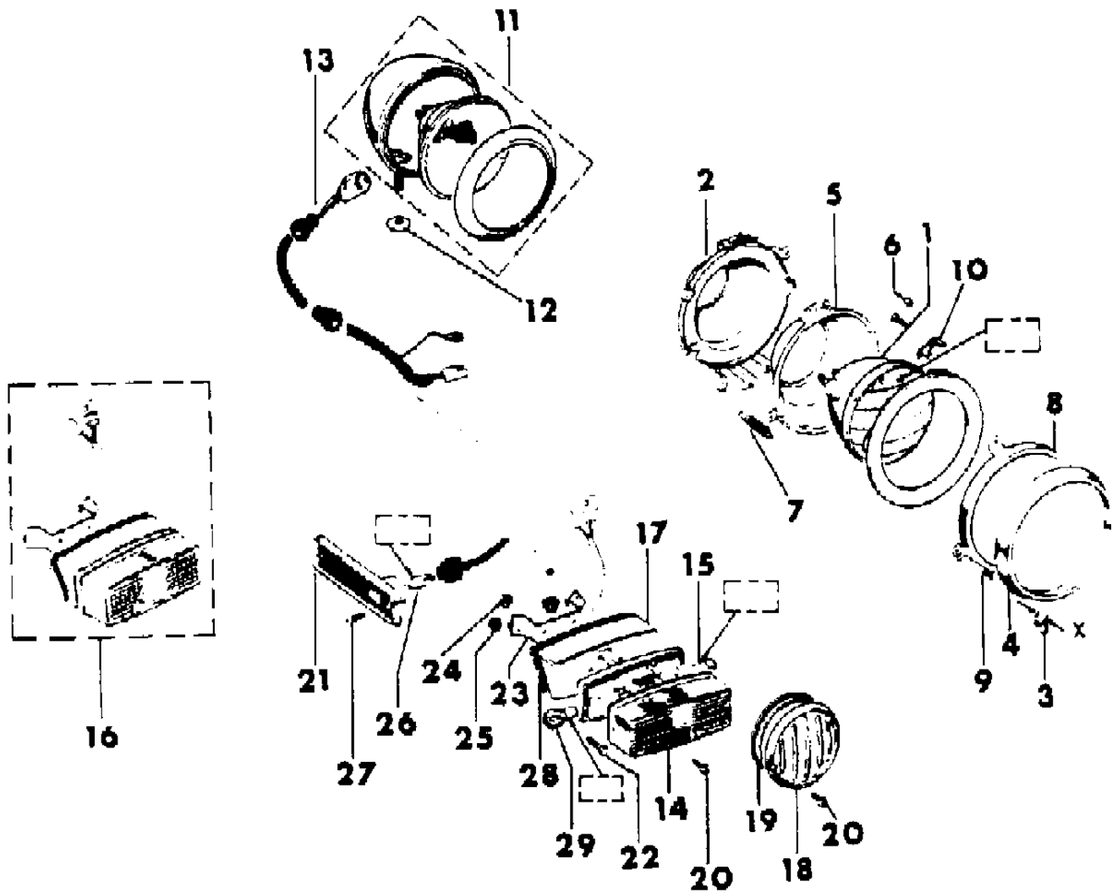

ITEM	PART NUMBER	QTY	BODY	MODEL	DESCRIPTION
1					BULB
	J576 3651	2			"4001"
		2			"4003"
2	J812 1350	2			HOUSING
3					SCREW
	S017 9349	2			.62"
	J400 5821	2			.75"
4	J546 0087	2			BEZEL
5	J812 1351	2			SHELL ***
6	J090 8577	4			SCREW
7	J320 5364	2			SPRING
8	J812 8749	2			RING
9	S045 0211	2			SCREW
10	J576 3655	6			CLIP
11	J576 3663	2			HEADLAMP ASSEMBLY
12	J400 7085	2			WASHER
13	J576 3508	2			WIRING
14					LENS, Park and Turn
	J813 3788	1			Right
	J813 3789	1			Left
15	J813 3773	2			BULB, "R19-10"
16					LAMP, Park and Turn
	J275 8200	1			Right
	J575 8201	1			Left
17					BASE
	J576 3572	1			Right
	J576 3573	1			Left
18	J575 8358	2			COVER
19	J575 8357	2			GASKET
20	J400 5806	4			SCREW
21	J099 4020	2			LAMP, Marker
22	J400 3924	4			BOLT
23	J576 3563	2			BRACKET
24	J027 1163	4			NUT
25	S027 3801	4			NUT
26	J099 4037	2			BULB, "194"
27	J098 5199	4			SCREW
28	J575 8112	2			GASKET
29	J575 7455	2			BULB, "25-1"

MODEL CODES
16=Cherokee 2 Dr.(1981-83)
17=Cherokee 2 Dr.(1981-83)
73=Cherokee 2WD-2 Dr.(1984-86)
74=Cherokee 2WD-4 Dr.(1984-86)
18=Cherokee 4 Dr.(1981-83)
77=Cherokee 4WD-2 Dr.(1984-86)
78=Cherokee 4WD-4 Dr.(1984-86)
85=CJ-5 (1981-83)
86=CJ-6(1981)
87=CJ-7(1981-86)
88=CJ-8, Scrambler(1981-86)
64=Comanche 2WD-6 Ft. Box(1986)
66=Comanche 2WD-7 Ft. Box(1986)
63=Comanche 4WD-6 Ft. Box(1986)
65=Comanche 4WD-7 Ft. Box(1986)
15=Grand Wagoneer 4 Dr.(1984-86)
25=J-10 Truck 7 Ft. Box(1981-84)
26=J10 Truck 8 Ft. Box(1981-86)
27=J-20 Truck 8 Ft. Box(1981-86)
15=Wagoneer 4 Dr.(1981-83)
75=Wagoneer 4WD-4 Dr.(1984-86)

BODY
CJ=CJ-5, CJ-6, CJ-7, CJ-8, Scrambler(1981-86)
MJ=Comanche Pickup(1986)

STYLES
SJ=Wagoneer(1981-83), Grand Wagoneer(1984-86), Cherokee(1981-83), J-10, J-20(1981-86)
XJ=Wagoneer(1984-86), Cherokee(1984-86)

AR = Use as Required - = Non Illustrated Part P.A.R. = Paint as Required

« RETURN TO GROUP INDEX

LAMPS--FRONT FOG CJ-5,6,7,8, SCRAMBLER
Figure 8-6700

81J08 6700

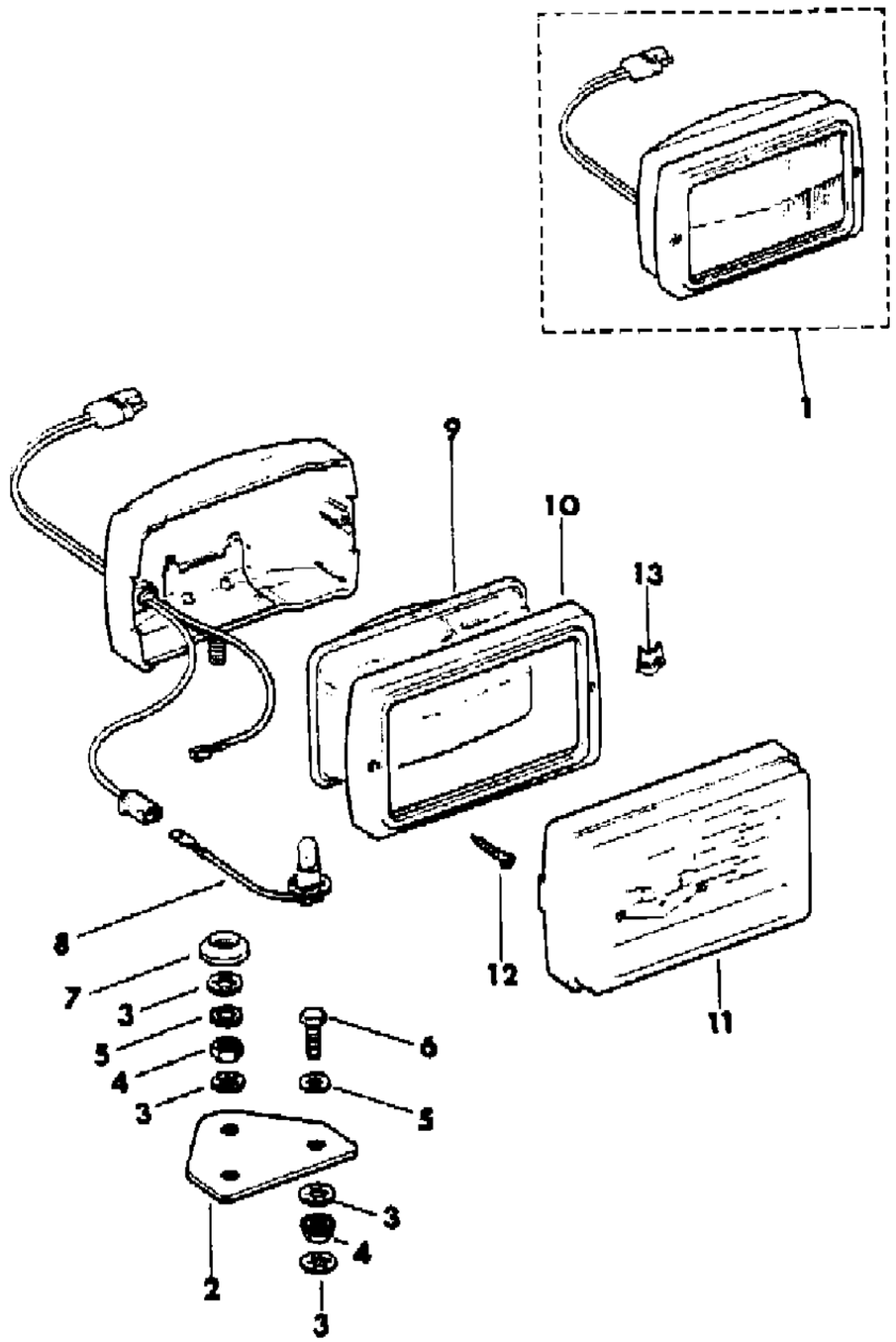

ITEM	PART NUMBER	QTY	BODY	MODEL	DESCRIPTION
1					LAMP, Fog
	J575 6841	2			Clear
	J575 6842	2			Amber
2	J575 6733	2			BRACKET
3	J400 3084	4			RETAINER
4	J027 1190	4			NUT
5	J400 6601	4			WASHER
6	J400 6602	4			BOLT
7	J813 2883	2			BASE
8	J813 3441	2			BLUB, Quartz Halogen ***
9	J813 3440	2			LENS, Fog Lamp
10	J813 3442	2			BEZEL
11					COVER, Fog Lamp
	J575 6840	2			White
	5600 2068	2			Black
12	J400 3924	4			SCREW
13					MEDALLION
	8350 2831	2			Black
	8350 2842	2			Gold

MODEL CODES

16=Cherokee 2 Dr.(1981-83)
17=Cherokee 2 Dr.(1981-83)
73=Cherokee 2WD-2 Dr.(1984-86)
74=Cherokee 2WD-4 Dr.(1984-86)
18=Cherokee 4 Dr.(1981-83)
77=Cherokee 4WD-2 Dr.(1984-86)
78=Cherokee 4WD-4 Dr.(1984-86)
85=CJ-5 (1981-83)
86=CJ-6(1981)
87=CJ-7(1981-86)
88=CJ-8, Scrambler(1981-86)
64=Comanche 2WD-6 Ft. Box(1986)
66=Comanche 2WD-7 Ft. Box(1986)
63=Comanche 4WD-6 Ft. Box(1986)
65=Comanche 4WD-7 Ft. Box(1986)
15=Grand Wagoneer 4 Dr.(1984-86)
25=J-10 Truck 7 Ft. Box(1981-84)
26=J10 Truck 8 Ft. Box(1981-86)
27=J-20 Truck 8 Ft. Box(1981-86)
15=Wagoneer 4 Dr.(1981-83)
75=Wagoneer 4WD-4 Dr.(1984-86)

BODY
CJ=CJ-5, CJ-6, CJ-7, CJ-8, Scrambler(1981-86)
MJ=Comanche Pickup(1986)

STYLES
SJ=Wagoneer(1981-83), Grand Wagoneer(1984-86), Cherokee(1981-83), J-10, J-20(1981-86)
XJ=Wagoneer(1984-86), Cherokee(1984-86)

AR = Use as Required - = Non Illustrated Part P.A.R. = Paint as Required

« RETURN TO GROUP INDEX

LAMP--FRONT BLACKOUT CJ-5,6,7,8, SCRAMBLER
Figure 8-6800

81J08 6800

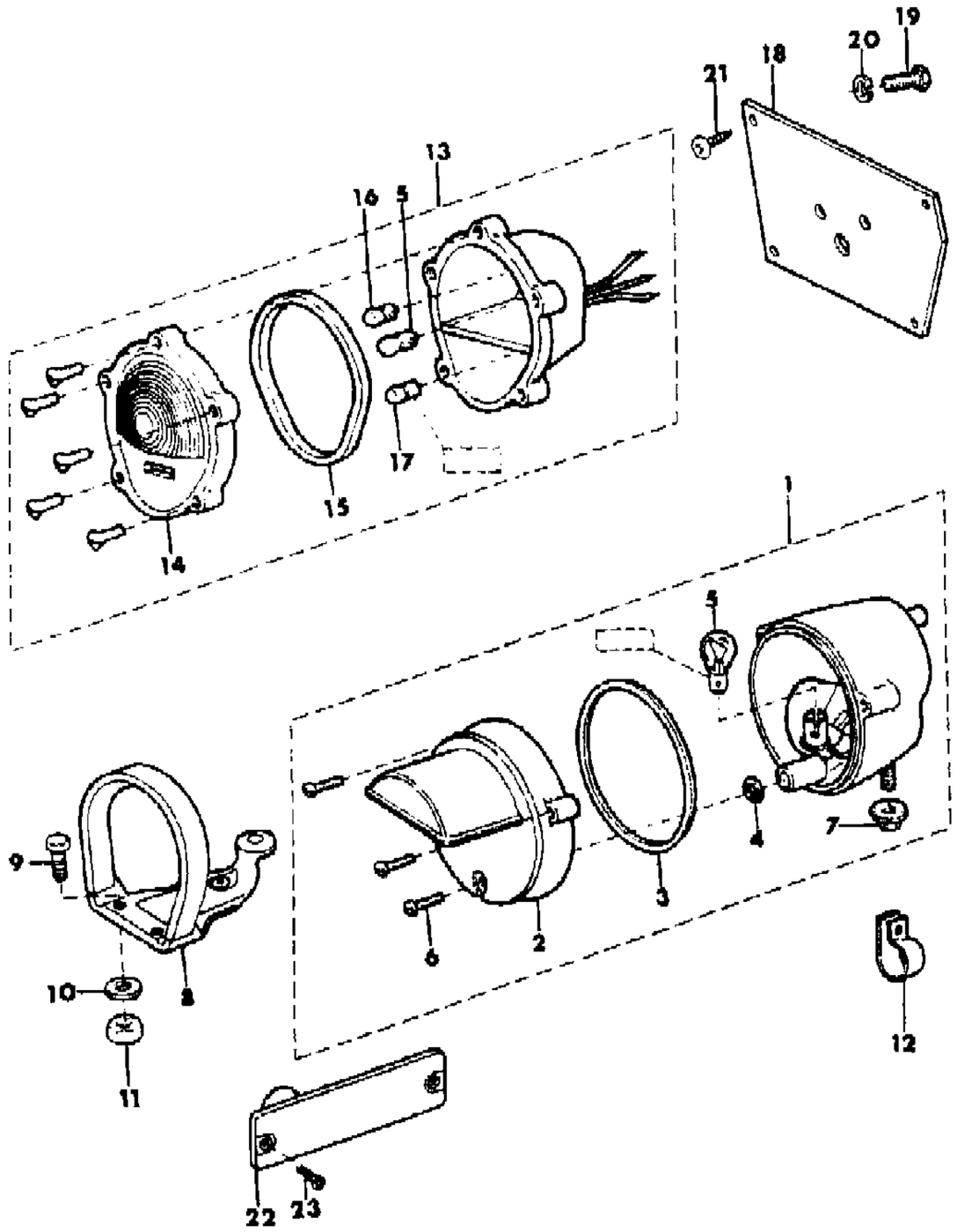

ITEM	PART NUMBER	QTY	BODY	MODEL	DESCRIPTION
1					LAMP, Blackout
	J805 1525	2			Tan
	J805 0378	2			Green
2					DOOR, Blackout Lamp
	J813 4592	2			Tan
	J813 4591	2			Green
3	J813 4593	2			GASKET
4	J813 4594	2			O-Ring ***
5	J320 9543	2			BULB, "1156"
6	J813 4595	3			SCREW
2	J400 4747	2			NUT
8	J805 0377	2			BRACKET
9	S017 9814	3			BOLT
10	J012 0214	3			WASHER
11	J012 0376	3			NUT
12	J012 7879	1			CLIP
13					LAMP, Blackout Park&Turn
	J805 1526	2			Tan
	J805 0374	2			Green
14					COVER, Blackout Park Lamp
	J813 4577	2			Tan
	J813 4576	2			Green
15	J813 4580	2			GASKET
16	J014 2452	2			BULB, "89"
17	J014 2450	2			BULB, "67"
18					BRACKET
	J805 3012	2			Front
	J805 3043	2			Rear
19	J400 5600	4			SCREW
20	J012 0382	4			WASHER
21	J941 6223	8			SCREW
22	J575 8206	2			PLATE
23	J400 2461	4			SCREW

MODEL CODES

16=Cherokee 2 Dr.(1981-83)
17=Cherokee 2 Dr.(1981-83)
73=Cherokee 2WD-2 Dr.(1984-86)
74=Cherokee 2WD-4 Dr.(1984-86)
18=Cherokee 4 Dr.(1981-83)
77=Cherokee 4WD-2 Dr.(1984-86)
78=Cherokee 4WD-4 Dr.(1984-86)
85=CJ-5 (1981-83)
86=CJ-6(1981)
87=CJ-7(1981-86)
88=CJ-8, Scrambler(1981-86)
64=Comanche 2WD-6 Ft. Box(1986)
66=Comanche 2WD-7 Ft. Box(1986)
63=Comanche 4WD-6 Ft. Box(1986)
65=Comanche 4WD-7 Ft. Box(1986)
15=Grand Wagoneer 4 Dr.(1984-86)
25=J-10 Truck 7 Ft. Box(1981-84)
26=J10 Truck 8 Ft. Box(1981-86)
27=J-20 Truck 8 Ft. Box(1981-86)
15=Wagoneer 4 Dr.(1981-83)
75=Wagoneer 4WD-4 Dr.(1984-86)

BODY
CJ=CJ-5, CJ-6, CJ-7, CJ-8, Scrambler(1981-86)
MJ=Comanche Pickup(1986)

STYLES
SJ=Wagoneer(1981-83), Grand Wagoneer(1984-86), Cherokee(1981-83), J-10, J-20(1981-86)
XJ=Wagoneer(1984-86), Cherokee(1984-86)

AR = Use as Required - = Non Illustrated Part P.A.R. = Paint as Required

« RETURN TO GROUP INDEX

LAMP--FRONT U.S. AND CANADA XJ CHEROKEE, XJ WAGONEER, COMANCHE
Figure 8-6900

81J08 6900

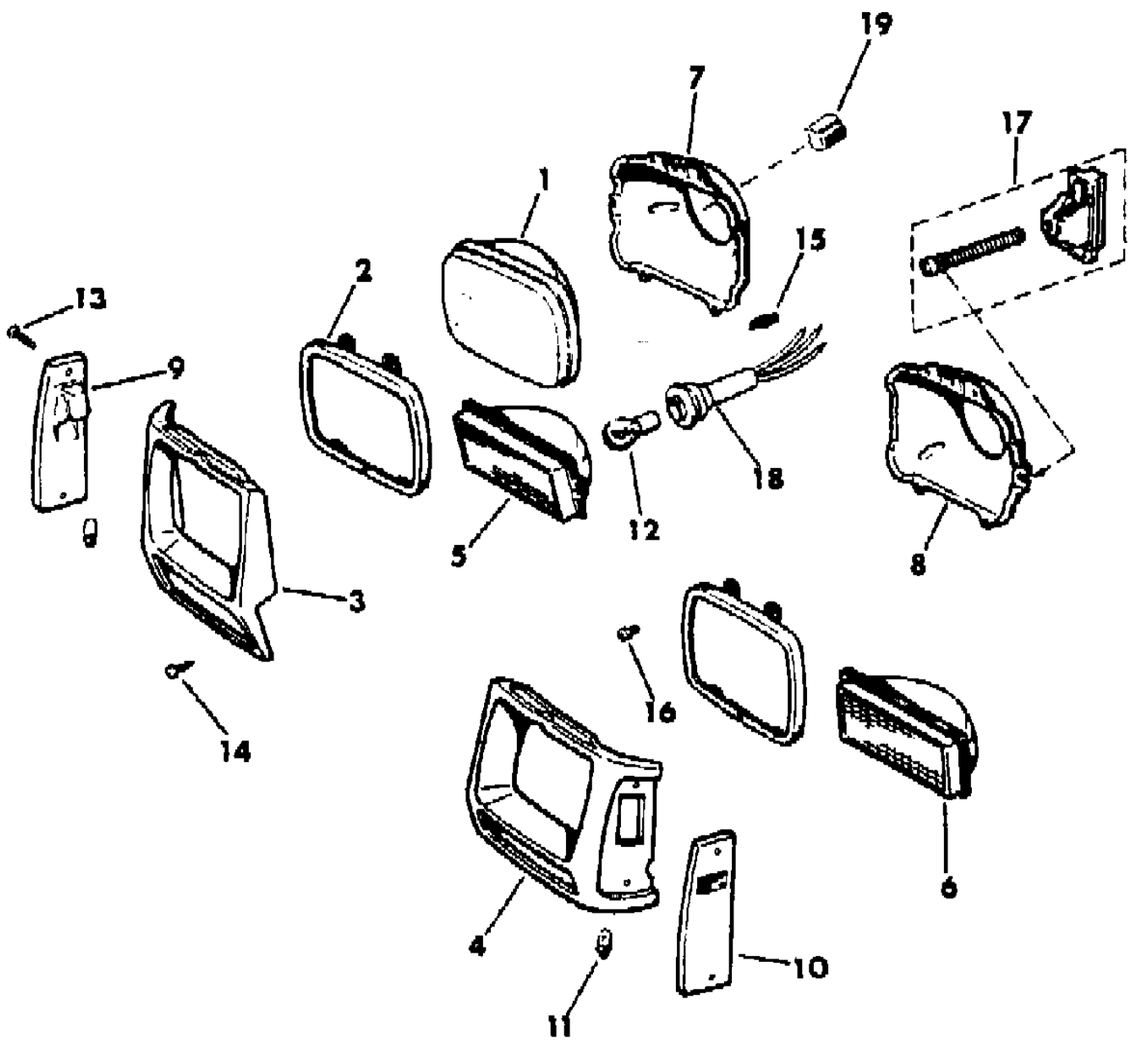

ITEM	PART NUMBER	QTY	BODY	MODEL	DESCRIPTION
1	J813 4319	2			BULB, Sealed Beam "H6054"
2	J373 7572	2			RING, Headlamp
3					BEZEL, Headlamp Right
	5500 0682	1			Grey
	5500 2244	1			Chrome
4					BEZEL, Headlamp Left
	5500 0683	1			Grey
	5500 2245	1			Chrome
5	5600 0098	1			LAMP, Parking Right
6	5600 0099	1			LAMP, Parking Left
7	5600 1278	1			SEAT, Headlamp Right
8	5600 1279	1			SEAT, Headlamp Left
9	5600 0110	1			LAMP, Marker Right
10	5600 0111	1			LAMP, Marker Left
11	J942 1330	2			BULB, "194"
12	J943 8850	2			BULB, "2057NA"
13	3420 1406	4			SCREW
14	3420 1372	4			SCREW
15	J373 7568	4			SPRING
16	3420 1821	4			SCREW
17	3420 1415	4			SCREW, Headlamp Adjusting
18	8350 1000	2			SOCKET, Parking Lamp
19	J099 8475	2			SOCKET, Headlamp

MODEL CODES

16=Cherokee 2 Dr.(1981-83)
17=Cherokee 2 Dr.(1981-83)
73=Cherokee 2WD-2 Dr.(1984-86)
74=Cherokee 2WD-4 Dr.(1984-86)
18=Cherokee 4 Dr.(1981-83)
77=Cherokee 4WD-2 Dr.(1984-86)
78=Cherokee 4WD-4 Dr.(1984-86)
85=CJ-5 (1981-83)
86=CJ-6(1981)
87=CJ-7(1981-86)
88=CJ-8, Scrambler(1981-86)
64=Comanche 2WD-6 Ft. Box(1986)
66=Comanche 2WD-7 Ft. Box(1986)
63=Comanche 4WD-6 Ft. Box(1986)
65=Comanche 4WD-7 Ft. Box(1986)
15=Grand Wagoneer 4 Dr.(1984-86)
25=J-10 Truck 7 Ft. Box(1981-84)
26=J10 Truck 8 Ft. Box(1981-86)
27=J-20 Truck 8 Ft. Box(1981-86)
15=Wagoneer 4 Dr.(1981-83)
75=Wagoneer 4WD-4 Dr.(1984-86)

BODY
CJ=CJ-5, CJ-6, CJ-7, CJ-8, Scrambler(1981-86)
MJ=Comanche Pickup(1986)

STYLES
SJ=Wagoneer(1981-83), Grand Wagoneer(1984-86), Cherokee(1981-83), J-10, J-20(1981-86)
XJ=Wagoneer(1984-86), Cherokee(1984-86)

AR = Use as Required - = Non Illustrated Part P.A.R. = Paint as Required

« RETURN TO GROUP INDEX

LAMPS--FRONT U.S. AND CANADA XJ WAGONEER
Figure 8-7000

81J08 7000

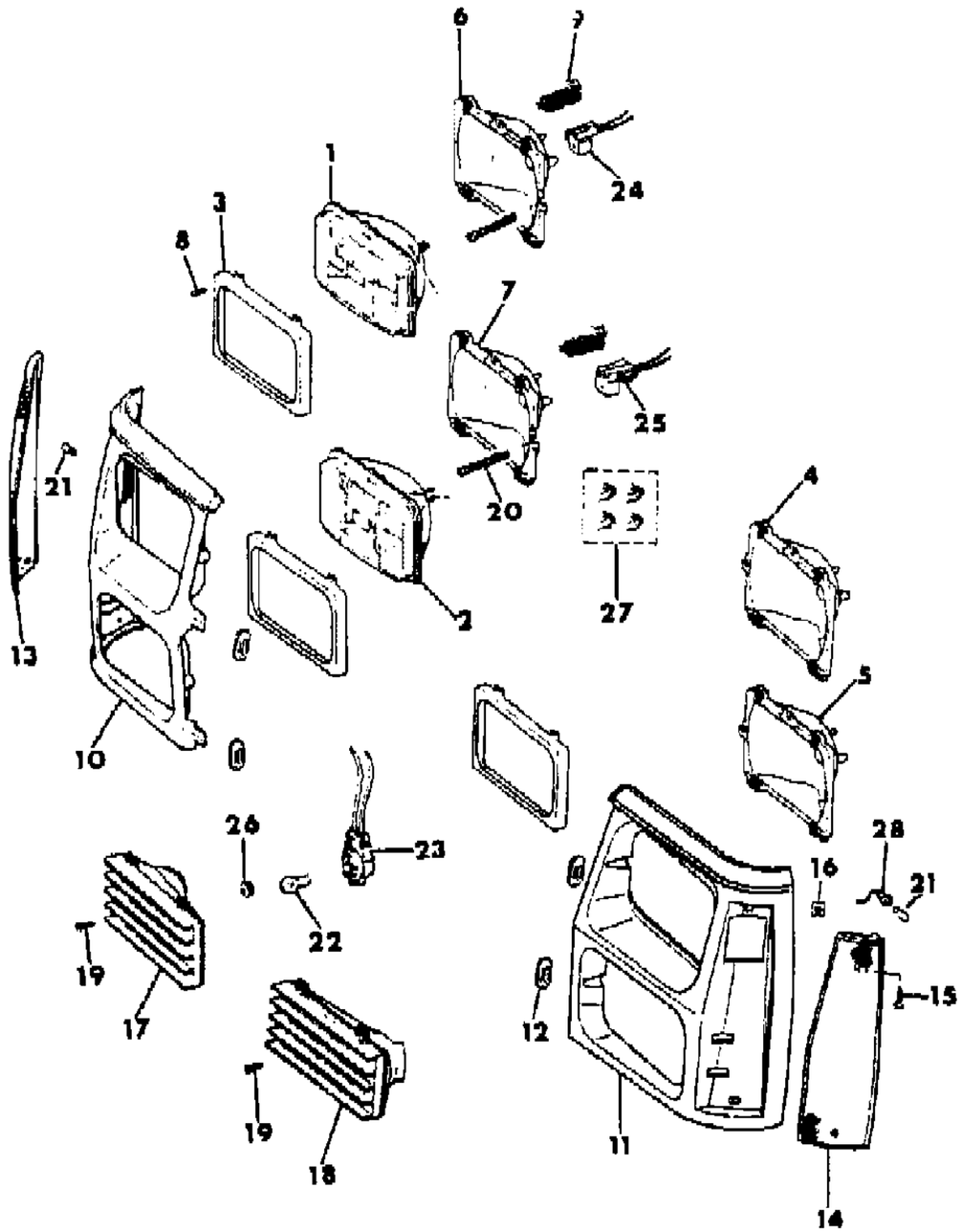

ITEM	PART NUMBER	QTY	BODY	MODEL	DESCRIPTION
1	3600 1059	2			BULB, Sealed Beam "H4703"
2	3600 1058	2			BULB, Sealed Beam "H4710"
3	3600 1060	4			RING, Headlamp
4	3600 1056	1			SEAT, Headlamp Upper Left
5	3600 1052	1			SEAT, Headlamp Lower Left
6	3600 1057	1			SEAT, Headlamp Upper Right
7	3600 1053	1			SEAT, Headlamp Lower Right
8	S650 3553	16			SCREW
9	5600 1892	4			SPRING
10	5500 8046	1			BEZEL, Headlamp Right
11	5500 8047	1			BEZEL, Headlamp Left
12	5500 9573	4			GROMMET
13	5600 1528	1			LAMP, Marker Right
14	5600 1529	1			LAMP, Marker Left
15	3420 1406	4			SCREW
16	3420 1265	4			NUT
17	5600 1530	1			LAMP, Park&Turn Right
18	5600 1531	1			LAMP, Park&Turn Left
19	3420 1426	6			SCREW
20	3420 1415	8			SCREW, Headlamp Adjusting
21	J942 1330	2			BULB, "194"
22	J943 8850	2			BULB, "2057NA"
23	J812 8931	2			SOCKET, Park Lamp
24	8350 2841	2			CONNECTOR, Low Beam
25	8350 2840	2			CONNECTOR, High Beam
26	3420 1263	6			NUT
27	S650 3548	4			NUT
28	J448 9395	1			SOCKET, Marker Lamp

MODEL CODES
16=Cherokee 2 Dr.(1981-83)
17=Cherokee 2 Dr.(1981-83)
73=Cherokee 2WD-2 Dr.(1984-86)
74=Cherokee 2WD-4 Dr.(1984-86)
18=Cherokee 4 Dr.(1981-83)
77=Cherokee 4WD-2 Dr.(1984-86)
78=Cherokee 4WD-4 Dr.(1984-86)
85=CJ-5 (1981-83)
86=CJ-6(1981)
87=CJ-7(1981-86)
88=CJ-8, Scrambler(1981-86)
64=Comanche 2WD-6 Ft. Box(1986)
66=Comanche 2WD-7 Ft. Box(1986)
63=Comanche 4WD-6 Ft. Box(1986)
65=Comanche 4WD-7 Ft. Box(1986)
15=Grand Wagoneer 4 Dr.(1984-86)
25=J-10 Truck 7 Ft. Box(1981-84)
26=J10 Truck 8 Ft. Box(1981-86)
27=J-20 Truck 8 Ft. Box(1981-86)
15=Wagoneer 4 Dr.(1981-83)
75=Wagoneer 4WD-4 Dr.(1984-86)

BODY
CJ=CJ-5, CJ-6, CJ-7, CJ-8, Scrambler(1981-86)
MJ=Comanche Pickup(1986)

STYLES
SJ=Wagoneer(1981-83), Grand Wagoneer(1984-86), Cherokee(1981-83), J-10, J-20(1981-86)
XJ=Wagoneer(1984-86), Cherokee(1984-86)

AR = Use as Required - = Non Illustrated Part P.A.R. = Paint as Required

« RETURN TO GROUP INDEX

LAMPS--FRONT EXPORT XJ CHEROKEE, COMANCHE
Figure 8-7100

81J08 7100

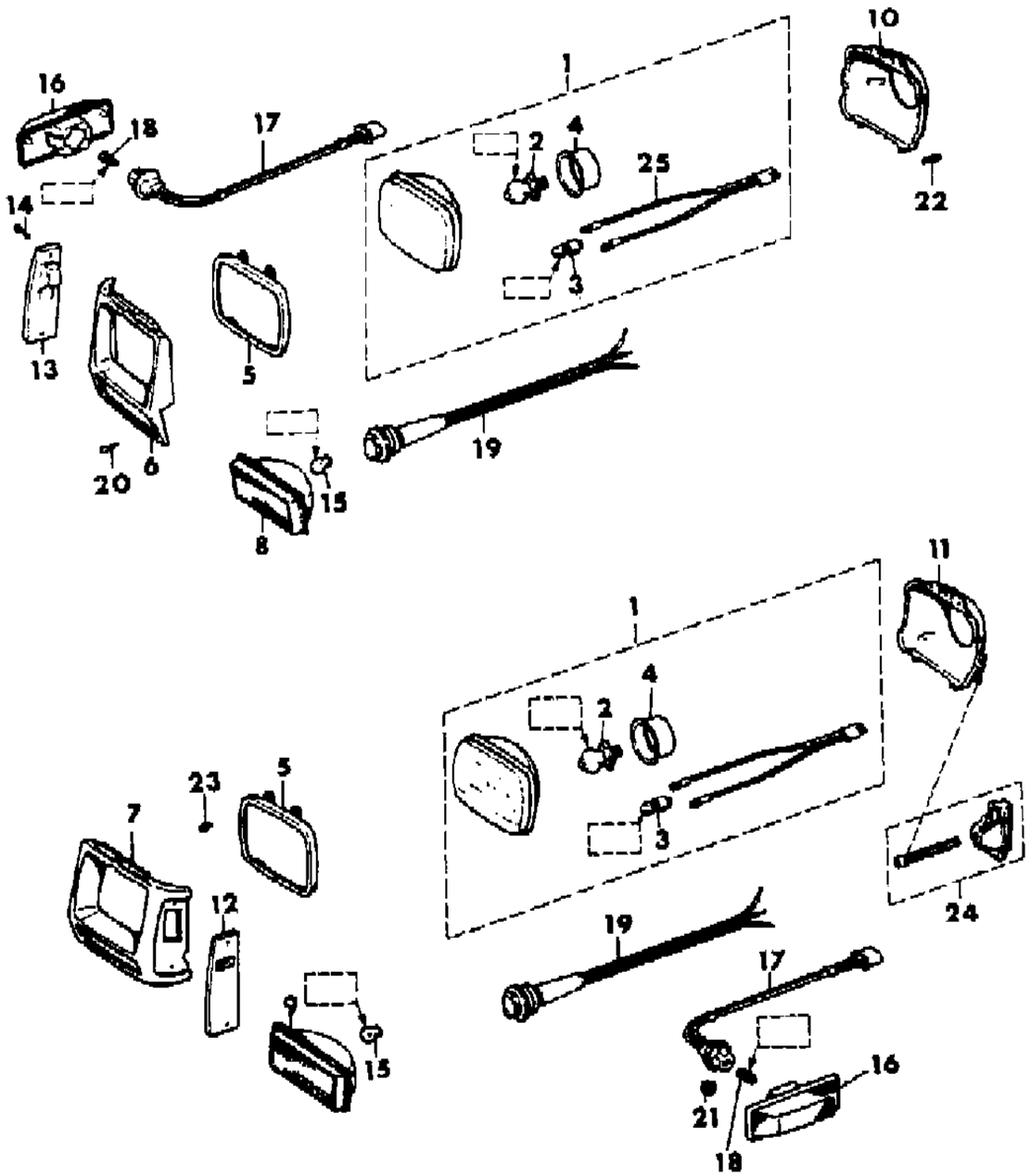

ITEM	PART NUMBER	QTY	BODY	MODEL	DESCRIPTION
1					HEADLAMP ASSEMBLY
	5600 0888	2			Amber
	5600 0887	2			Clear
2					BULB, "H4"
	J324 2784	2			Amber
	J324 2537	2			Clear
3	J324 2539	2			BULB, "T8-4"
4	J813 3795	2			BOOT
5	J373 7572	2			RING, Headlaamp
6					BEZEL, Headlamp Right
	5500 0682	1			Gray
	5500 2244	1			Chrome
7					BEZEL, Headlamp Left
	5500 0683	1			Gray
	5500 2245	1			Chrome
8	5600 0852	1			LAMP, Parking Right
9	5600 0853	1			LAMP, Parking Left
10	J373 7571	1			SEAT, Headlamp Right
11	J373 7570	1			SEAT, Headlamp Left
12	5600 0639	1			COVER, Marker Lamp Left
13	5600 0638	1			COVER, Marker Lamp Right
14	3420 1406	4			SCREW
15	J575 7450	2			BULB, "P25-1"
16	5600 1127	2			LAMP, Turn
17	5600 1433	2			SOCKET
18	J942 1330	2			BULB, "194"
19	8350 1000	2			SOCKET, Park Lamp
20	3420 1372	4			SCREW
21	S027 1482	4			NUT
22	J373 7568	4			SPRING
23	3420 1821	4			SCREW
24	3420 1415	4			SCREW, Headlamp Adjusting
25	J324 2536	2			WIRING, Headlamp

MODEL CODES
16=Cherokee 2 Dr.(1981-83)
17=Cherokee 2 Dr.(1981-83)
73=Cherokee 2WD-2 Dr.(1984-86)
74=Cherokee 2WD-4 Dr.(1984-86)
18=Cherokee 4 Dr.(1981-83)
77=Cherokee 4WD-2 Dr.(1984-86)
78=Cherokee 4WD-4 Dr.(1984-86)
85=CJ-5 (1981-83)
86=CJ-6(1981)
87=CJ-7(1981-86)
88=CJ-8, Scrambler(1981-86)
64=Comanche 2WD-6 Ft. Box(1986)
66=Comanche 2WD-7 Ft. Box(1986)
63=Comanche 4WD-6 Ft. Box(1986)
65=Comanche 4WD-7 Ft. Box(1986)
15=Grand Wagoneer 4 Dr.(1984-86)
25=J-10 Truck 7 Ft. Box(1981-84)
26=J10 Truck 8 Ft. Box(1981-86)
27=J-20 Truck 8 Ft. Box(1981-86)
15=Wagoneer 4 Dr.(1981-83)
75=Wagoneer 4WD-4 Dr.(1984-86)

BODY
CJ=CJ-5, CJ-6, CJ-7, CJ-8, Scrambler(1981-86)
MJ=Comanche Pickup(1986)

STYLES
SJ=Wagoneer(1981-83), Grand Wagoneer(1984-86), Cherokee(1981-83), J-10, J-20(1981-86)
XJ=Wagoneer(1984-86), Cherokee(1984-86)

AR = Use as Required - = Non Illustrated Part P.A.R. = Paint as Required

« RETURN TO GROUP INDEX

LAMPS--FRONT FOG XJ CHEROKEE, XJ WAGONEER, COMANCHE
Figure 8-7200

81J08 7200

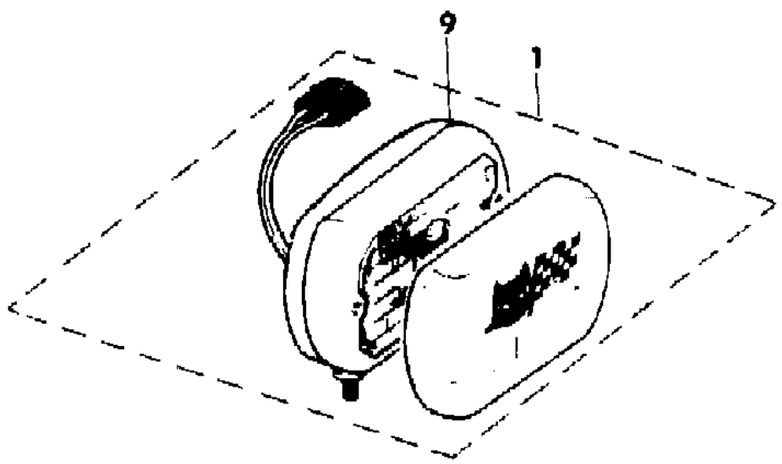

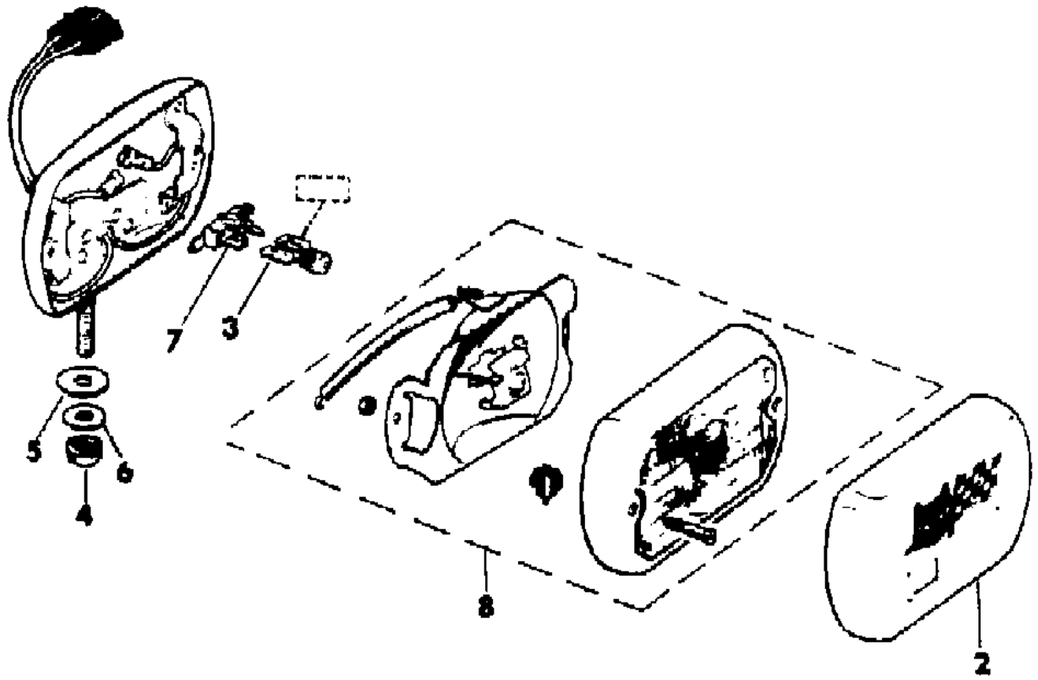

ITEM	PART NUMBER	QTY	BODY	MODEL	DESCRIPTION
1	5600 0478	2			LAMP, Fog
2	J323 7331	2			COVER, Fog Lamp
3	J323 7340	3			BULB, "H-2"
4	1150 1033	2			NUT
5	3420 1447	2			WASHER
6	1150 0273	2			WASHER
7	J812 8699	2			SOCKET
8	J813 2620	2			LENS, Fog Lamp
9	8350 2263	2			LAMP, Fog

MODEL CODES

16=Cherokee 2 Dr.(1981-83)
17=Cherokee 2 Dr.(1981-83)
73=Cherokee 2WD-2 Dr.(1984-86)
74=Cherokee 2WD-4 Dr.(1984-86)
18=Cherokee 4 Dr.(1981-83)
77=Cherokee 4WD-2 Dr.(1984-86)
78=Cherokee 4WD-4 Dr.(1984-86)
85=CJ-5 (1981-83)
86=CJ-6(1981)
87=CJ-7(1981-86)
88=CJ-8, Scrambler(1981-86)
64=Comanche 2WD-6 Ft. Box(1986)
66=Comanche 2WD-7 Ft. Box(1986)
63=Comanche 4WD-6 Ft. Box(1986)
65=Comanche 4WD-7 Ft. Box(1986)
15=Grand Wagoneer 4 Dr.(1984-86)
25=J-10 Truck 7 Ft. Box(1981-84)
26=J10 Truck 8 Ft. Box(1981-86)
27=J-20 Truck 8 Ft. Box(1981-86)
15=Wagoneer 4 Dr.(1981-83)
75=Wagoneer 4WD-4 Dr.(1984-86)

BODY
CJ=CJ-5, CJ-6, CJ-7, CJ-8, Scrambler(1981-86)
MJ=Comanche Pickup(1986)

STYLES
SJ=Wagoneer(1981-83), Grand Wagoneer(1984-86), Cherokee(1981-83), J-10, J-20(1981-86)
XJ=Wagoneer(1984-86), Cherokee(1984-86)

AR = Use as Required - = Non Illustrated Part P.A.R. = Paint as Required

« RETURN TO GROUP INDEX

LAMPS--FRONT U.S. AND CANADA SJ CHEROKEE, SJ WAGONEER, J10, J20
Figure 8-7300

81J087300

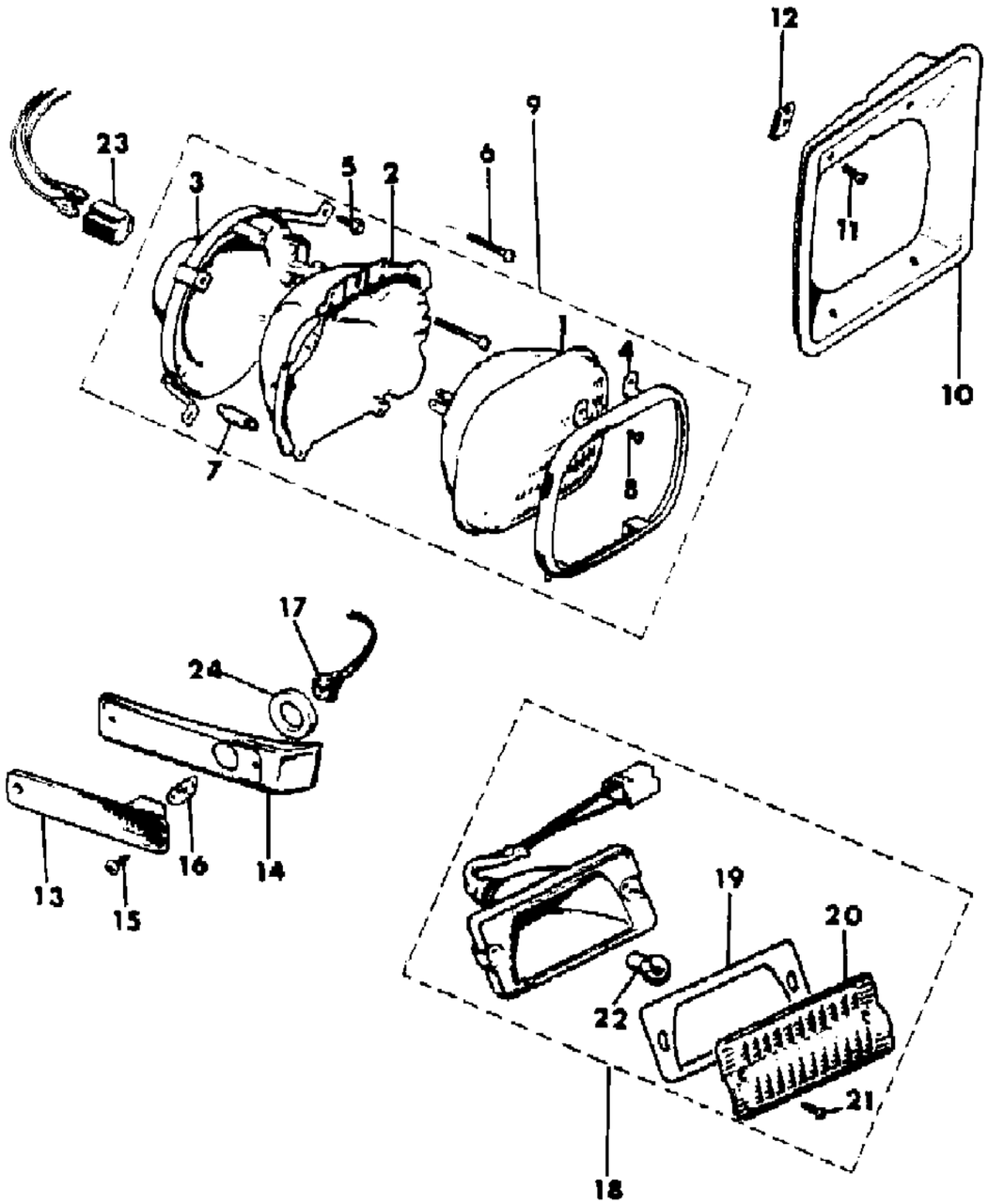

ITEM	PART NUMBER	QTY	BODY	MODEL	DESCRIPTION
1					BULB, Sealed Beam
	J812 8683	2			"6052"
	J813 2905	2			"H6052"
	J813 4319	2			"H6054"
2	J812 9592	2			SEAT, Headlamp
3	J813 0053	2			HOUSING, Headlamp
4	J812 9439	2			RING, Headlamp
5	J942 6241	8			SCREW
6	J812 9405	4			SCREW
7	J320 2756	2			SPRING
8	J320 2761	8			SCREW
9					HAEDLAMP ASSEMBLY ***
	J546 8563	2			"6052"
	J575 2861	2			"H6052"
10					BEZEL, Headlamp
	J575 8702-3	1			Black
	J575 2838-9	1			Gray
					Chrome
	J575 6764-5	1			1981-82
	J576 4142-3	1			1983-86
11					SCREW
	J999 7561	8			.50"
	J096 9718	8			.62"
					.87"
	J400 2902	8			Black
	J400 5906	8			Chrome
12	J400 5843	8			NUT
13	J099 4020	2			LAMP, Marker
14	J546 5790-1	1			BASE, Karker Lamp
15					SCREW
	J098 5199	2			.75"
	J098 5198	2			1.25"
16	J942 1330	2			BULB, "194"
17	J448 9395	2			SOCKET, Marker Lamp
18	J546 0106-7	1			LAMP, Park/Turn
19	J546 0101	2			GASKET
20	J546 0102-3	1			LENS, Park/Turn
21	S942 5249	4			SCREW
22	J320 9544	2			BULB, "1157"

MODEL CODES

16=Cherokee 2 Dr.(1981-83)
17=Cherokee 2 Dr.(1981-83)
73=Cherokee 2WD-2 Dr.(1984-86)
74=Cherokee 2WD-4 Dr.(1984-86)
18=Cherokee 4 Dr.(1981-83)
77=Cherokee 4WD-2 Dr.(1984-86)
78=Cherokee 4WD-4 Dr.(1984-86)
85=CJ-5 (1981-83)
86=CJ-6(1981)
87=CJ-7(1981-86)
88=CJ-8, Scrambler(1981-86)
64=Comanche 2WD-6 Ft. Box(1986)
66=Comanche 2WD-7 Ft. Box(1986)
63=Comanche 4WD-6 Ft. Box(1986)
65=Comanche 4WD-7 Ft. Box(1986)
15=Grand Wagoneer 4 Dr.(1984-86)
25=J-10 Truck 7 Ft. Box(1981-84)
26=J10 Truck 8 Ft. Box(1981-86)
27=J-20 Truck 8 Ft. Box(1981-86)
15=Wagoneer 4 Dr.(1981-83)
75=Wagoneer 4WD-4 Dr.(1984-86)

BODY
CJ=CJ-5, CJ-6, CJ-7, CJ-8, Scrambler(1981-86)
MJ=Comanche Pickup(1986)

STYLES
SJ=Wagoneer(1981-83), Grand Wagoneer(1984-86), Cherokee(1981-83), J-10, J-20(1981-86)
XJ=Wagoneer(1984-86), Cherokee(1984-86)

AR = Use as Required - = Non Illustrated Part P.A.R. = Paint as Required

« RETURN TO GROUP INDEX »

81J087300

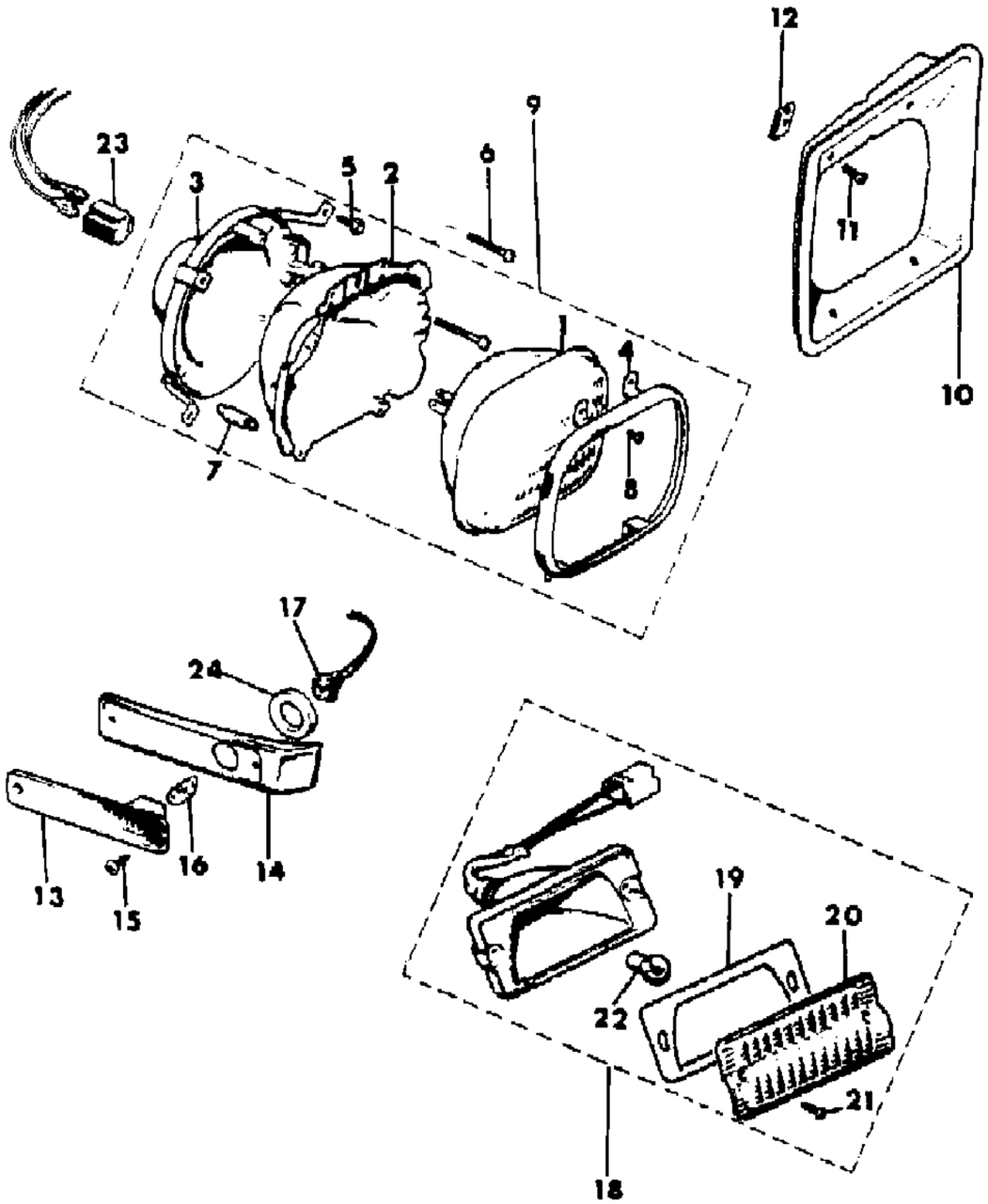

ITEM	PART NUMBER	QTY	BODY	MODEL	DESCRIPTION
23	J099 8475	2			SOCKET, Headlamp
24	5505 2547	2			SEAL

MODEL CODES
16=Cherokee 2 Dr.(1981-83)
17=Cherokee 2 Dr.(1981-83)
73=Cherokee 2WD-2 Dr.(1984-86)
74=Cherokee 2WD-4 Dr.(1984-86)
18=Cherokee 4 Dr.(1981-83)
77=Cherokee 4WD-2 Dr.(1984-86)
78=Cherokee 4WD-4 Dr.(1984-86)
85=CJ-5 (1981-83)
86=CJ-6(1981)
87=CJ-7(1981-86)
88=CJ-8, Scrambler(1981-86)
64=Comanche 2WD-6 Ft. Box(1986)
66=Comanche 2WD-7 Ft. Box(1986)
63=Comanche 4WD-6 Ft. Box(1986)
65=Comanche 4WD-7 Ft. Box(1986)
15=Grand Wagoneer 4 Dr.(1984-86)
25=J-10 Truck 7 Ft. Box(1981-84)
26=J10 Truck 8 Ft. Box(1981-86)
27=J-20 Truck 8 Ft. Box(1981-86)
15=Wagoneer 4 Dr.(1981-83)
75=Wagoneer 4WD-4 Dr.(1984-86)

BODY
CJ=CJ-5, CJ-6, CJ-7, CJ-8, Scrambler(1981-86)
MJ=Comanche Pickup(1986)

STYLES
SJ=Wagoneer(1981-83), Grand Wagoneer(1984-86), Cherokee(1981-83), J-10, J-20(1981-86)
XJ=Wagoneer(1984-86), Cherokee(1984-86)

AR = Use as Required - = Non Illustrated Part P.A.R. = Paint as Required

LAMPS--FRONT EXPORT SJ CHEROKEE, SJ WAGONEER, J10, J20
Figure 8-7400

81J08 7400

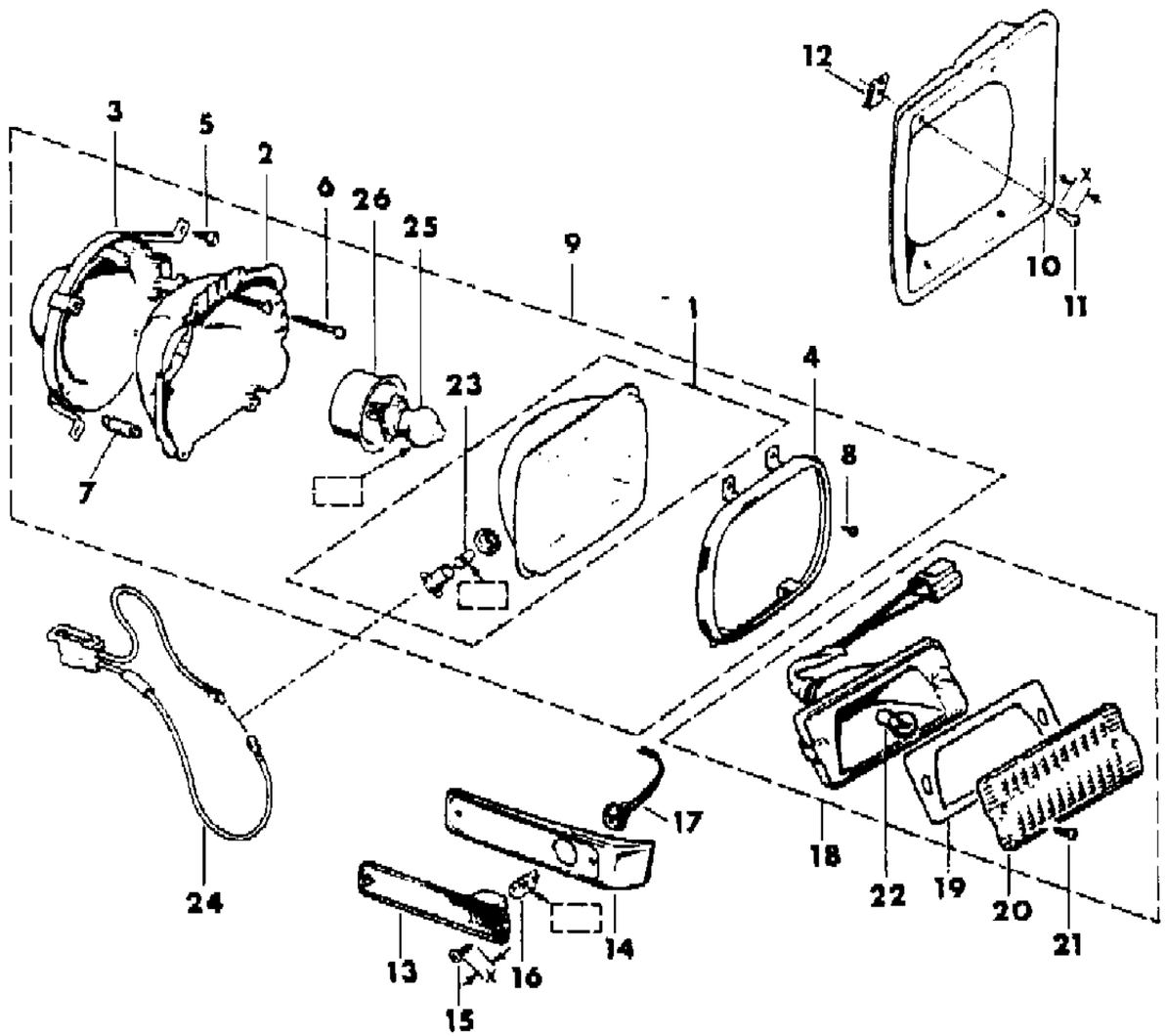

ITEM	PART NUMBER	QTY	BODY	MODEL	DESCRIPTION
1					HEADLAMP, Sealed Beam
					Clear
	J813 3769	2			Left Hand Drive
	J813 3771	2			Right Hand Drive
	J813 3770	2			Amber
2	J812 9592	2			SHELL, Headlamp ***
3	J813 0053	2			HOUSING, Headlamp
4	J812 9439	2			RING
5	J942 6241	8			SCREW
6	J812 9405	4			SCREW
7	J320 2756	2			SPRING
8	J320 2761	8			SCREW
9					HEADLAMP ASSEMBLY
					Clear
	J575 8040	2			Left Hand Drive
	J575 8038	2			Right Hand Drive
	J575 8039	2			Amber
10					BEZEL, Headlamp
	J575 8702-3	1			Black
	J575 2838-9	1			Gray
					Chrome
	J575 6764-5	1			1981-82
	J576 4142-3	1			1983-86
11					SCREW
	J999 7561	6			.50"
	J096 9718	6			.62"
					.87"
	J900 2902	6			Black
	J400 5906	6			Chrome
12	J400 5843	8			NUT
13	J099 4020	2			LAMP, Marker
14	J546 5790-1	1			BASE, Marking Lamp
15					SCREW
	J098 5199	2			.75"
	J098 5198	2			1.25"
16	J942 1330	2			BULB, "194"
17	J448 9395	2			SOCKET
18	J575 2730-1	1			LAMP, Park/Trun
19	J546 0101	2			GASKET

MODEL CODES
16=Cherokee 2 Dr.(1981-83)
17=Cherokee 2 Dr.(1981-83)
73=Cherokee 2WD-2 Dr.(1984-86)
74=Cherokee 2WD-4 Dr.(1984-86)
18=Cherokee 4 Dr.(1981-83)
77=Cherokee 4WD-2 Dr.(1984-86)
78=Cherokee 4WD-4 Dr.(1984-86)
85=CJ-5 (1981-83)
86=CJ-6(1981)
87=CJ-7(1981-86)
88=CJ-8, Scrambler(1981-86)
64=Comanche 2WD-6 Ft. Box(1986)
66=Comanche 2WD-7 Ft. Box(1986)
63=Comanche 4WD-6 Ft. Box(1986)
65=Comanche 4WD-7 Ft. Box(1986)
15=Grand Wagoneer 4 Dr.(1984-86)
25=J-10 Truck 7 Ft. Box(1981-84)
26=J10 Truck 8 Ft. Box(1981-86)
27=J-20 Truck 8 Ft. Box(1981-86)
15=Wagoneer 4 Dr.(1981-83)
75=Wagoneer 4WD-4 Dr.(1984-86)

BODY
CJ=CJ-5, CJ-6, CJ-7, CJ-8, Scrambler(1981-86)
MJ=Comanche Pickup(1986)

STYLES
SJ=Wagoneer(1981-83), Grand Wagoneer(1984-86), Cherokee(1981-83), J-10, J-20(1981-86)
XJ=Wagoneer(1984-86), Cherokee(1984-86)

AR = Use as Required - = Non Illustrated Part P.A.R. = Paint as Required

81J08 7400

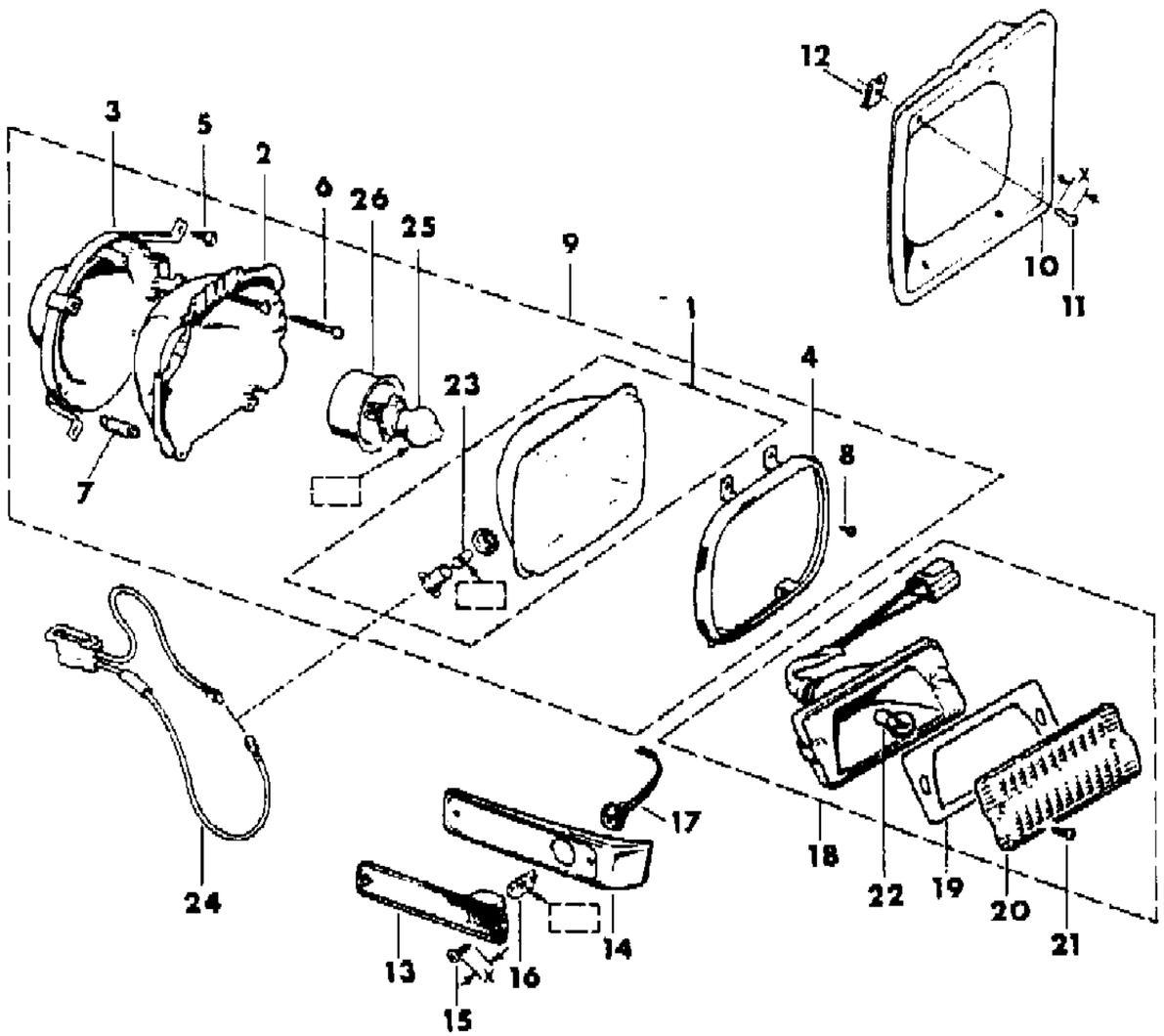

ITEM	PART NUMBER	QTY	BODY	MODEL	DESCRIPTION
20	J546 0102-3	1			LENS
21	S942 5249	4			SCREW
22	J320 9544	2			BULB, "1157"
23	J575 7455	2			BULB, "P25-1"
24	J575 8226	1			HARNESS
25					BULB, "H-4"
	J813 3772	2			Clear
	J813 3336	2			Amber
26	J813 3795	2			BOOT

MODEL CODES
16=Cherokee 2 Dr.(1981-83)
17=Cherokee 2 Dr.(1981-83)
73=Cherokee 2WD-2 Dr.(1984-86)
74=Cherokee 2WD-4 Dr.(1984-86)
18=Cherokee 4 Dr.(1981-83)
77=Cherokee 4WD-2 Dr.(1984-86)
78=Cherokee 4WD-4 Dr.(1984-86)
85=CJ-5 (1981-83)
86=CJ-6(1981)
87=CJ-7(1981-86)
88=CJ-8, Scrambler(1981-86)
64=Comanche 2WD-6 Ft. Box(1986)
66=Comanche 2WD-7 Ft. Box(1986)
63=Comanche 4WD-6 Ft. Box(1986)
65=Comanche 4WD-7 Ft. Box(1986)
15=Grand Wagoneer 4 Dr.(1984-86)
25=J-10 Truck 7 Ft. Box(1981-84)
26=J10 Truck 8 Ft. Box(1981-86)
27=J-20 Truck 8 Ft. Box(1981-86)
15=Wagoneer 4 Dr.(1981-83)
75=Wagoneer 4WD-4 Dr.(1984-86)

BODY
CJ=CJ-5, CJ-6, CJ-7, CJ-8, Scrambler(1981-86)
MJ=Comanche Pickup(1986)

STYLES
SJ=Wagoneer(1981-83), Grand Wagoneer(1984-86), Cherokee(1981-83), J-10, J-20(1981-86)
XJ=Wagoneer(1984-86), Cherokee(1984-86)

AR = Use as Required - = Non Illustrated Part P.A.R. = Paint as Required

LAMPS--FRONT FOG SJ CHEROKEE, SJ WAGONEER, J10, J20
Figure 8-7500

81J08 7500

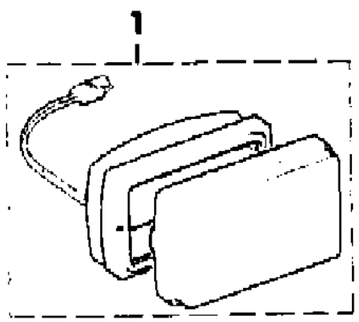

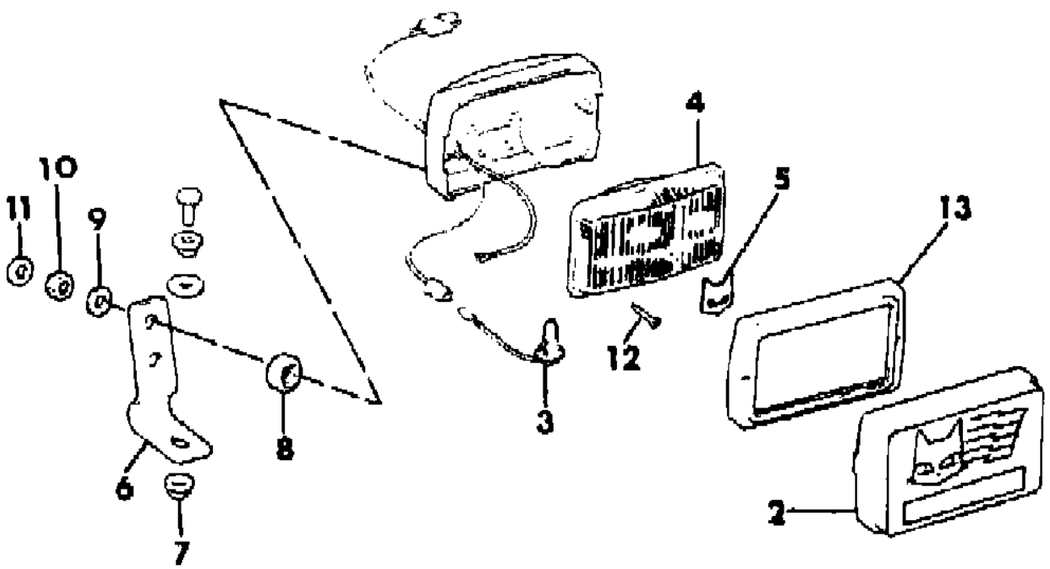

ITEM	PART NUMBER	QTY	BODY	MODEL	DESCRIPTION
1					LAMP, Fog
	J575 6841	2			Clear
	J575 6842	2			Amber
2					COVER, Fog Lamp
	5600 2068	2			Black
	J575 6840	2			White
3	J813 3441	2			BULB, Quartz Halogen
4	J813 3440	2			LENS
5					MEDALLION
	8350 2831	2			Black
	8350 2842	2			Gold
6	J575 8043	2			BRACKET
7	J400 3956	2			NUT
8	J813 2883	2			BASE
9	J013 8485	4			WASHER
10	J027 1190	4			NUT
11	J400 3084	4			RETAINER
12	J400 3924	4			SCREW
13	J813 3442	2			BEZEL

MODEL CODES
16=Cherokee 2 Dr.(1981-83)
17=Cherokee 2 Dr.(1981-83)
73=Cherokee 2WD-2 Dr.(1984-86)
74=Cherokee 2WD-4 Dr.(1984-86)
18=Cherokee 4 Dr.(1981-83)
77=Cherokee 4WD-2 Dr.(1984-86)
78=Cherokee 4WD-4 Dr.(1984-86)
85=CJ-5 (1981-83)
86=CJ-6(1981)
87=CJ-7(1981-86)
88=CJ-8, Scrambler(1981-86)
64=Comanche 2WD-6 Ft. Box(1986)
66=Comanche 2WD-7 Ft. Box(1986)
63=Comanche 4WD-6 Ft. Box(1986)
65=Comanche 4WD-7 Ft. Box(1986)
15=Grand Wagoneer 4 Dr.(1984-86)
25=J-10 Truck 7 Ft. Box(1981-84)
26=J10 Truck 8 Ft. Box(1981-86)
27=J-20 Truck 8 Ft. Box(1981-86)
15=Wagoneer 4 Dr.(1981-83)
75=Wagoneer 4WD-4 Dr.(1984-86)

BODY
CJ=CJ-5, CJ-6, CJ-7, CJ-8, Scrambler(1981-86)
MJ=Comanche Pickup(1986)

STYLES
SJ=Wagoneer(1981-83), Grand Wagoneer(1984-86), Cherokee(1981-83), J-10, J-20(1981-86)
XJ=Wagoneer(1984-86), Cherokee(1984-86)

AR = Use as Required - = Non Illustrated Part P.A.R. = Paint as Required

« RETURN TO GROUP INDEX

LAMPS--REAR U.S. AND CANADA CJ-5,6,7,8, SCRAMBLER
Figure 8-7600

81J08 7600

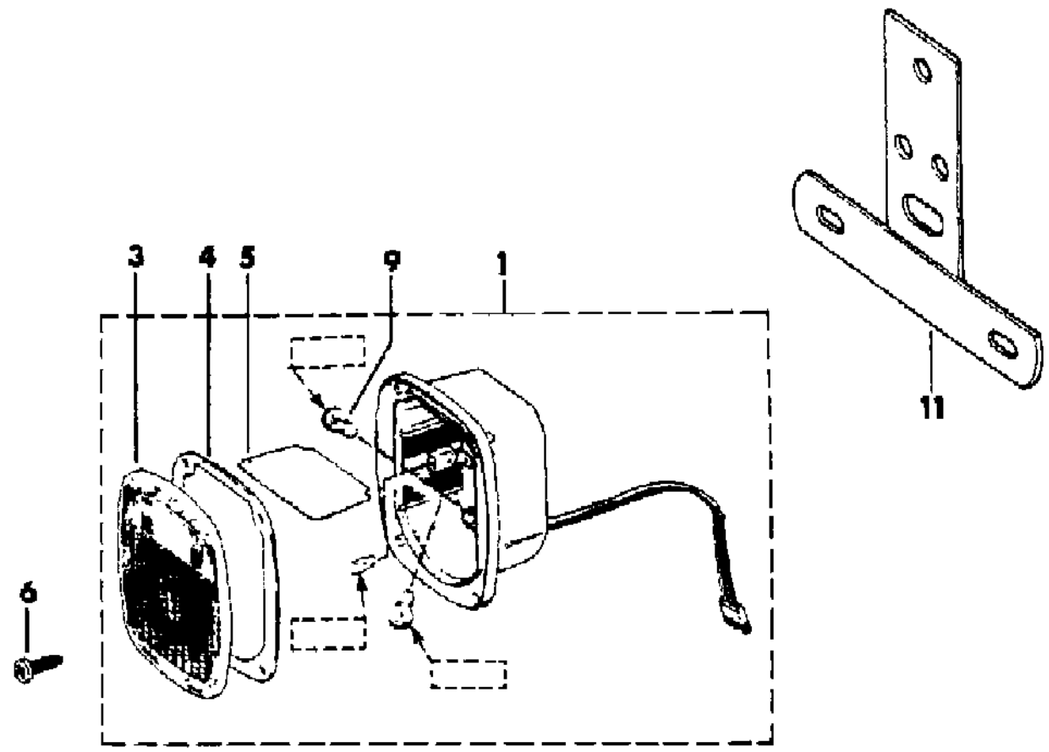

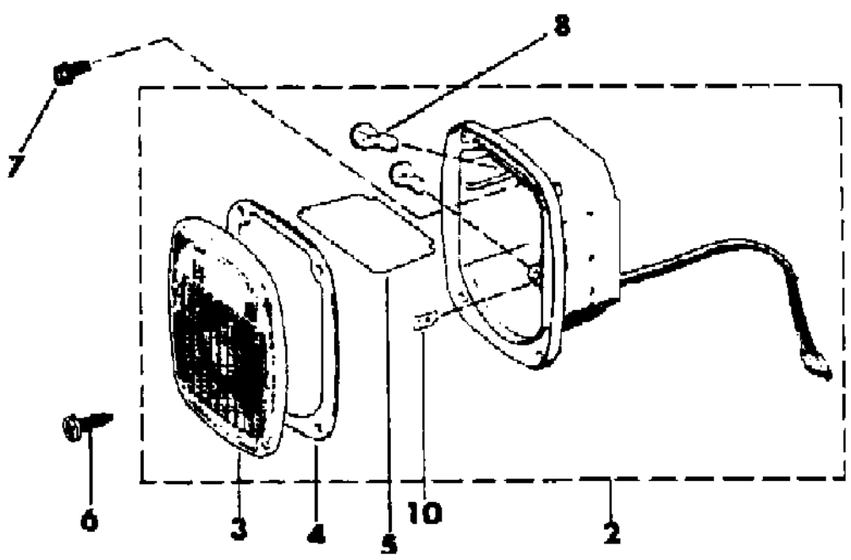

ITEM	PART NUMBER	QTY	BODY	MODEL	DESCRIPTION
1	J575 8255	1			TAILLAMP ASSEMBLY, Left ***
2	J575 8254	1			TAILLAMP ASSEMBLY, Right ***
3	J545 7724	2			LENS
4	J813 8253	2			GASKET
5	J545 7725	2			BAFFLE ***
6	J812 3288	8			SCREW
7	J400 0318	6			SCREW
8	J320 9543	2			BULB, "1156"
9	J320 9544	2			BULB, "1157"
10	J942 1330	2			BULB, "194"
11	J535 3758	1			BRACKET, License

MODEL CODES

16=Cherokee 2 Dr.(1981-83)
17=Cherokee 2 Dr.(1981-83)
73=Cherokee 2WD-2 Dr.(1984-86)
74=Cherokee 2WD-4 Dr.(1984-86)
18=Cherokee 4 Dr.(1981-83)
77=Cherokee 4WD-2 Dr.(1984-86)
78=Cherokee 4WD-4 Dr.(1984-86)
85=CJ-5 (1981-83)
86=CJ-6(1981)
87=CJ-7(1981-86)
88=CJ-8, Scrambler(1981-86)
64=Comanche 2WD-6 Ft. Box(1986)
66=Comanche 2WD-7 Ft. Box(1986)
63=Comanche 4WD-6 Ft. Box(1986)
65=Comanche 4WD-7 Ft. Box(1986)
15=Grand Wagoneer 4 Dr.(1984-86)
25=J-10 Truck 7 Ft. Box(1981-84)
26=J10 Truck 8 Ft. Box(1981-86)
27=J-20 Truck 8 Ft. Box(1981-86)
15=Wagoneer 4 Dr.(1981-83)
75=Wagoneer 4WD-4 Dr.(1984-86)

BODY
CJ=CJ-5, CJ-6, CJ-7, CJ-8, Scrambler(1981-86)
MJ=Comanche Pickup(1986)

STYLES
SJ=Wagoneer(1981-83), Grand Wagoneer(1984-86), Cherokee(1981-83), J-10, J-20(1981-86)
XJ=Wagoneer(1984-86), Cherokee(1984-86)

AR = Use as Required - = Non Illustrated Part P.A.R. = Paint as Required

« RETURN TO GROUP INDEX

LAMPS--REAR U.S. AND CANADA CJ-5,6,7,8, SCRAMBLER
Figure 8-7600

81J08 7700

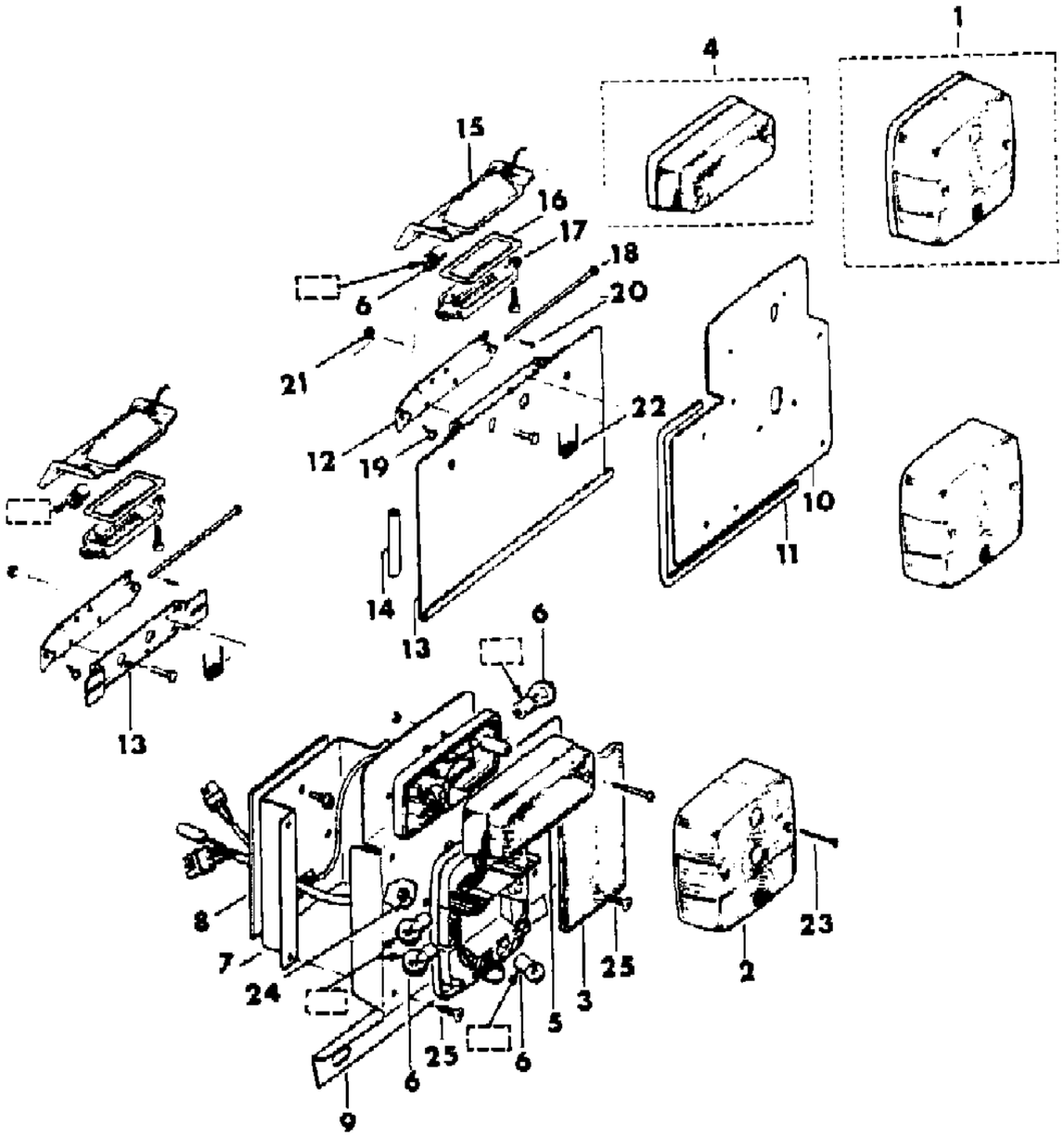

ITEM	PART NUMBER	QTY	BODY	MODEL	DESCRIPTION
1					TAILLAMP ASSEMBLY ***
					1981-83
	J575 8210-1	1			Economic Commission of Europe
	J575 8808	2			Australian Design Rule
	J576 3692	2			Japan
					1984-86
	J576 4204	2			Economic Commission of Europe
	J576 4204	2			Australian Design Rule
	J576 4205	2			Japan
2					LENS, Taillamp
					1981-83
	J813 3790-1	1			Ecomomic Commission of Europe
	J813 3790-1	1			Australian Design Rule
	8350 0289	2			Japan
	8350 1003	2			1984-86
3					REFLECTOR
	J575 8213	2			1981-83
4					LAMP, Back-up
	J575 8212	2			1981-83
5					LENS
5	J813 3787	2			1981-83
6					BULB
	J575 7455	2			"P25-1"
	J575 7450	2			"P25-2"
	J093 8900	2			"1155"
7	J575 8275	2			SUPPORT
8	J575 8499	2			GASKET
9					BRACKET, Left
	J575 8215	1			1981-83
10					BRACKET, Right
	J575 8214	1			1981-83
11	J576 1918	1			COVER
12					BRACKET
	J576 4216	1			Economic Commission of Europe
	J093 1389	1			Australian Design Rule
	J093 1389	1			Japan
13					HINGE
	J575 8832	1			Australian Design Rule
	J536 4381	1			Japan

MODEL CODES

16=Cherokee 2 Dr.(1981-83)	78=Cherokee 4WD-4 Dr.(1984-86)	64=Comanche 2WD-6 Ft. Box(1986)	25=J-10 Truck 7 Ft. Box(1981-84)
17=Cherokee 2 Dr.(1981-83)	85=CJ-5 (1981-83)	66=Comanche 2WD-7 Ft. Box(1986)	26=J10 Truck 8 Ft. Box(1981-86)
73=Cherokee 2WD-2 Dr.(1984-86)	86=CJ-6(1981)	63=Comanche 4WD-6 Ft. Box(1986)	27=J-20 Truck 8 Ft. Box(1981-86)
74=Cherokee 2WD-4 Dr.(1984-86)	87=CJ-7(1981-86)	65=Comanche 4WD-7 Ft. Box(1986)	15=Wagoneer 4 Dr.(1981-83)
18=Cherokee 4 Dr.(1981-83)	88=CJ-8, Scrambler(1981-86)	15=Grand Wagoneer 4 Dr.(1984-86)	75=Wagoneer 4WD-4 Dr.(1984-86)
77=Cherokee 4WD-2 Dr.(1984-86)			

BODY
CJ=CJ-5, CJ-6, CJ-7, CJ-8, Scrambler(1981-86)
MJ=Comanche Pickup(1986)

STYLES
SJ=Wagoneer(1981-83), Grand Wagoneer(1984-86), Cherokee(1981-83), J-10, J-20(1981-86)
XJ=Wagoneer(1984-86), Cherokee(1984-86)

AR = Use as Required - = Non Illustrated Part P.A.R. = Paint as Required

LAMPS--REAR U.S. AND CANADA CJ-5,6,7,8, SCRAMBLER
Figure 8-7600

81J08 7700

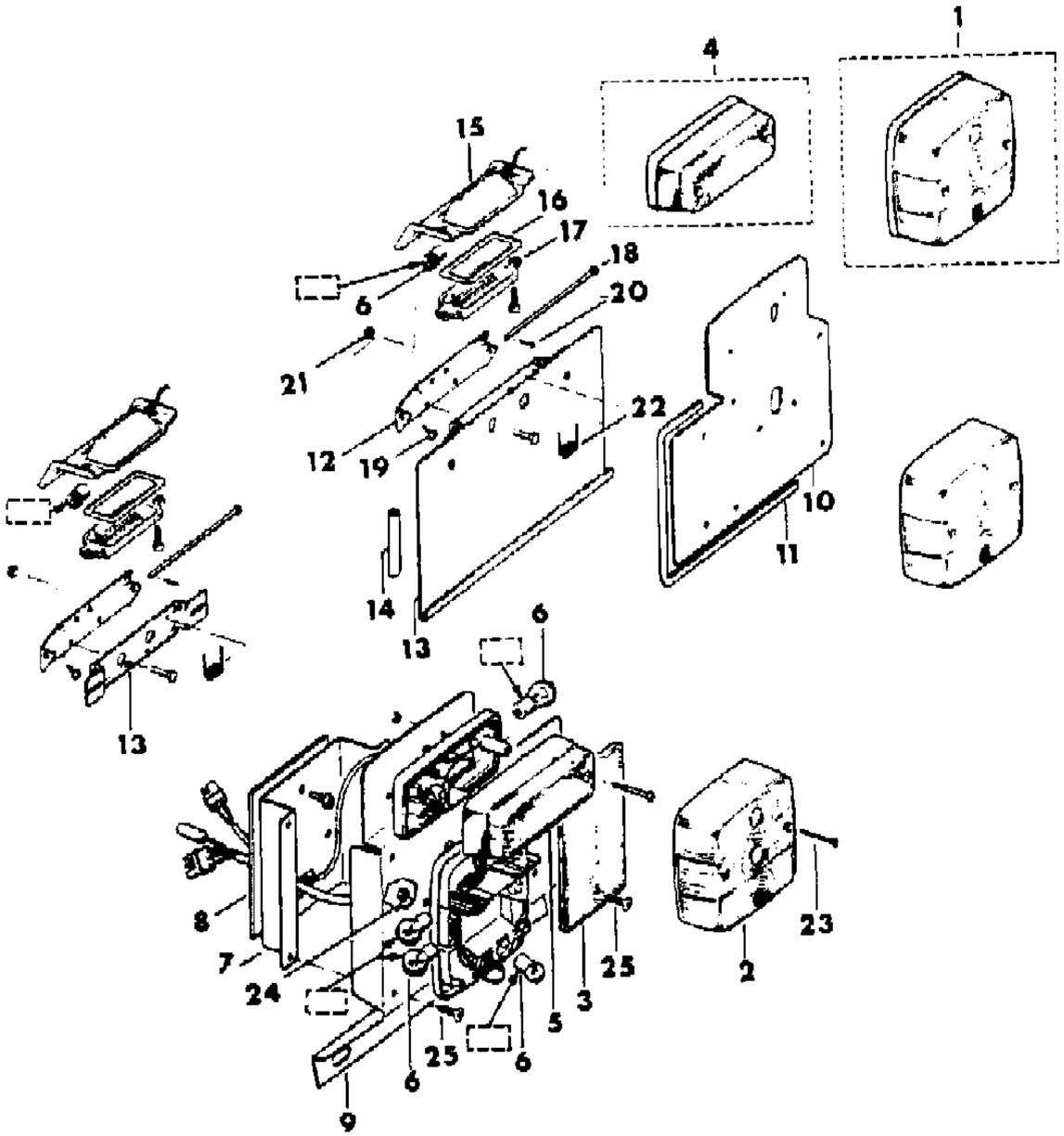

ITEM	PART NUMBER	QTY	BODY	MODEL	DESCRIPTION
14					COVER
	J575 8817	1			Economic Commission of Europe
	J576 1918	1			France
	J575 8837	1			Japan
15					LAMP, License
	J093 0887	1			1981-83
	J576 4222	1			1984-86
16					GASKET
	J093 0890	1			LENS
18	J093 1391	1			PIN
19	J018 7303	3			SCREW
20					PIN
	J400 5791	1			Economic Commission of Europe
	J400 0793	1			Australian Design Rule
	J400 0793	1			Japan
21	J012 0368	2			NUT
22	J093 1392	1			SPRING
23	J400 6352	8			SCREW
24	J420 0132	2			NUT
25	J400 5817	2			SCREW

MODEL CODES

16=Cherokee 2 Dr.(1981-83)
17=Cherokee 2 Dr.(1981-83)
73=Cherokee 2WD-2 Dr.(1984-86)
74=Cherokee 2WD-4 Dr.(1984-86)
18=Cherokee 4 Dr.(1981-83)
77=Cherokee 4WD-2 Dr.(1984-86)
78=Cherokee 4WD-4 Dr.(1984-86)
85=CJ-5 (1981-83)
86=CJ-6(1981)
87=CJ-7(1981-86)
88=CJ-8, Scrambler(1981-86)
64=Comanche 2WD-6 Ft. Box(1986)
66=Comanche 2WD-7 Ft. Box(1986)
63=Comanche 4WD-6 Ft. Box(1986)
65=Comanche 4WD-7 Ft. Box(1986)
15=Grand Wagoneer 4 Dr.(1984-86)
25=J-10 Truck 7 Ft. Box(1981-84)
26=J10 Truck 8 Ft. Box(1981-86)
27=J-20 Truck 8 Ft. Box(1981-86)
15=Wagoneer 4 Dr.(1981-83)
75=Wagoneer 4WD-4 Dr.(1984-86)

BODY
CJ=CJ-5, CJ-6, CJ-7, CJ-8, Scrambler(1981-86)
MJ=Comanche Pickup(1986)

STYLES
SJ=Wagoneer(1981-83), Grand Wagoneer(1984-86), Cherokee(1981-83), J-10, J-20(1981-86)
XJ=Wagoneer(1984-86), Cherokee(1984-86)

AR = Use as Required - = Non Illustrated Part P.A.R. = Paint as Required

« RETURN TO GROUP INDEX

LAMP--REAR FOG EXPORT CJ-5,6,7,8, SCRAMBLER
Figure 8-7800

81J08 7800

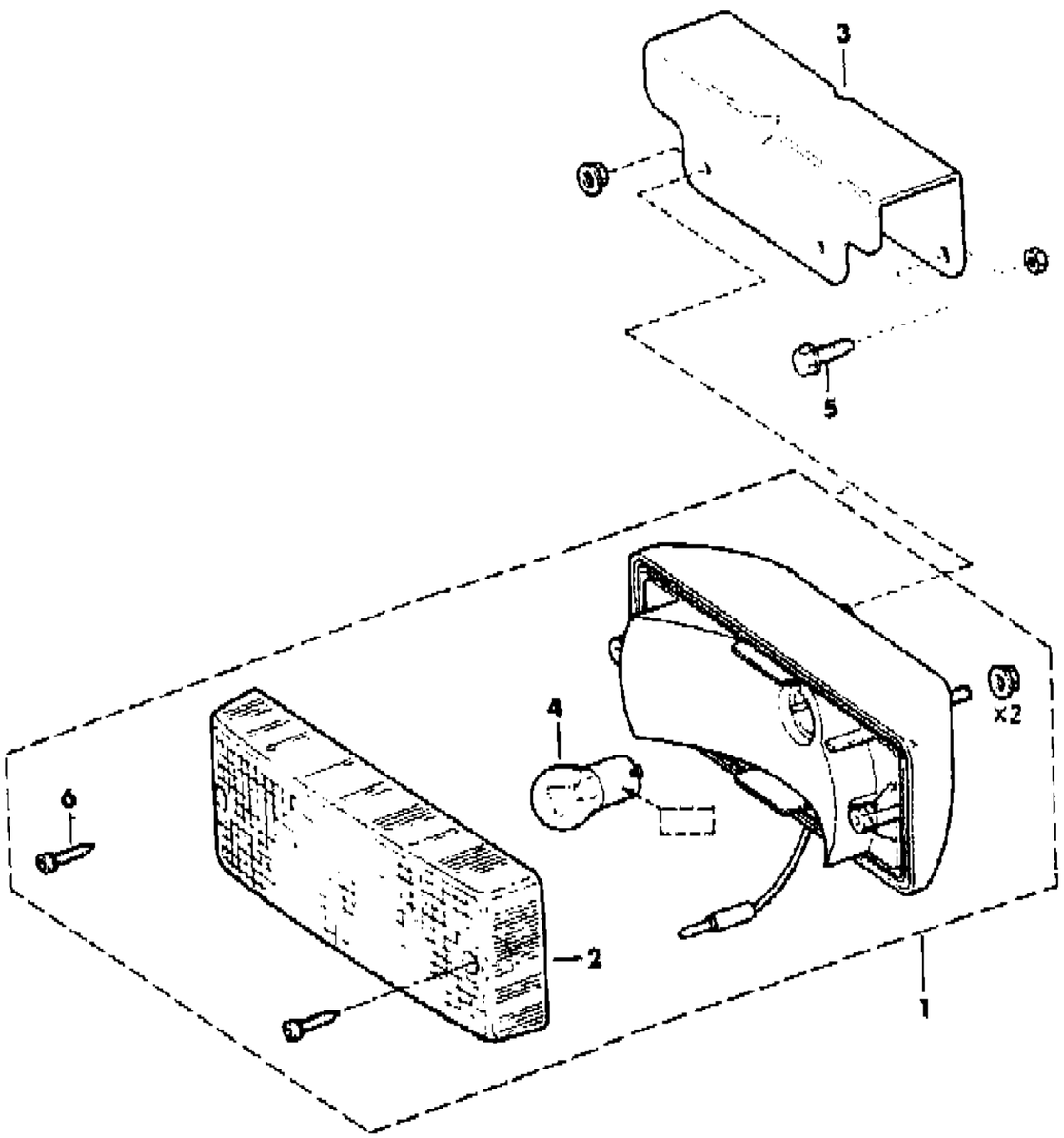

ITEM	PART NUMBER	QTY	BODY	MODEL	DESCRIPTION
1					LAMP ASSEMBLY
	J575 8994	1			1981-83
	J576 4754	1			1984-86
2	J813 4339	1			LENS
3	J575 8984	1			BRACKET
4	J575 7455	1			BULB, "P25-1"
5	T300 1611	2			SCREW
6	J812 3288	2			SCREW

MODEL CODES

16=Cherokee 2 Dr.(1981-83)
17=Cherokee 2 Dr.(1981-83)
73=Cherokee 2WD-2 Dr.(1984-86)
74=Cherokee 2WD-4 Dr.(1984-86)
18=Cherokee 4 Dr.(1981-83)
77=Cherokee 4WD-2 Dr.(1984-86)
78=Cherokee 4WD-4 Dr.(1984-86)
85=CJ-5 (1981-83)
86=CJ-6(1981)
87=CJ-7(1981-86)
88=CJ-8, Scrambler(1981-86)
64=Comanche 2WD-6 Ft. Box(1986)
66=Comanche 2WD-7 Ft. Box(1986)
63=Comanche 4WD-6 Ft. Box(1986)
65=Comanche 4WD-7 Ft. Box(1986)
15=Grand Wagoneer 4 Dr.(1984-86)
25=J-10 Truck 7 Ft. Box(1981-84)
26=J10 Truck 8 Ft. Box(1981-86)
27=J-20 Truck 8 Ft. Box(1981-86)
15=Wagoneer 4 Dr.(1981-83)
75=Wagoneer 4WD-4 Dr.(1984-86)

BODY
CJ=CJ-5, CJ-6, CJ-7, CJ-8, Scrambler(1981-86)
MJ=Comanche Pickup(1986)

STYLES
SJ=Wagoneer(1981-83), Grand Wagoneer(1984-86), Cherokee(1981-83), J-10, J-20(1981-86)
XJ=Wagoneer(1984-86), Cherokee(1984-86)

AR = Use as Required - = Non Illustrated Part P.A.R. = Paint as Required

« RETURN TO GROUP INDEX

LAMP--REAR BLACKOUT EXPORT CJ-5,6,7,8 SCRAMBLER
Figure 8-7900

81J08 7900

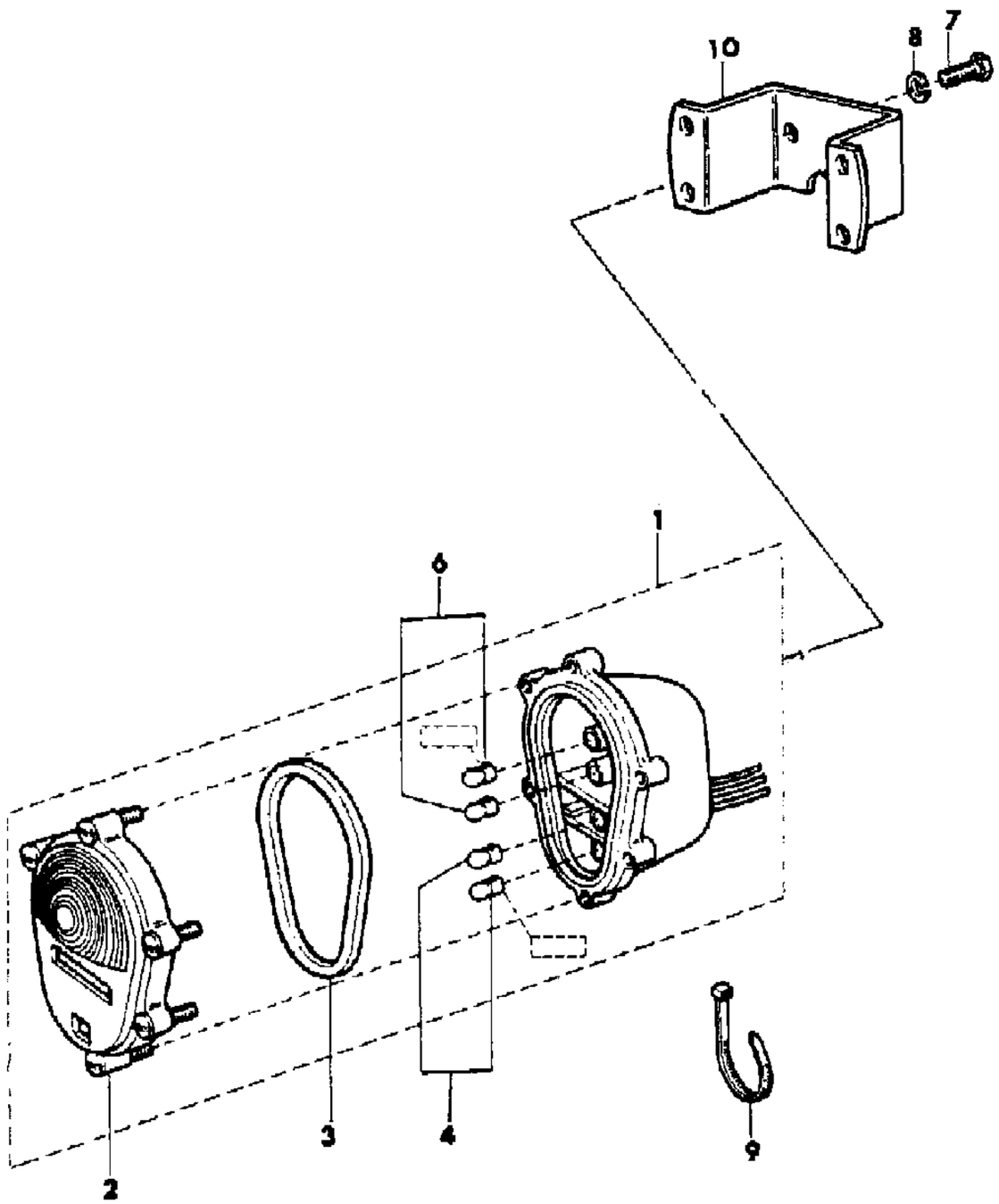

ITEM	PART NUMBER	QTY	BODY	MODEL	DESCRIPTION
1					LAMP ASSEMBLY
	J805 1526	2			Tan
	J805 0374	2			Green
2					COVER
	J813 4577	2			Tan
	J813 4576	2			Green
3	J813 4580	2			GASKET
4	J014 2450	4			BULB, "67"
5	J014 2452	2			BULB, "89"
6	J320 9543	2			BULB, "1156"
7	J018 0120	4			SCREW
8	J012 0382	4			WASHER
9	J322 3227	1			STRAP
10	J805 3043	2			BRACKET

MODEL CODES

16=Cherokee 2 Dr.(1981-83)
17=Cherokee 2 Dr.(1981-83)
73=Cherokee 2WD-2 Dr.(1984-86)
74=Cherokee 2WD-4 Dr.(1984-86)
18=Cherokee 4 Dr.(1981-83)
77=Cherokee 4WD-2 Dr.(1984-86)
78=Cherokee 4WD-4 Dr.(1984-86)
85=CJ-5 (1981-83)
86=CJ-6(1981)
87=CJ-7(1981-86)
88=CJ-8, Scrambler(1981-86)
64=Comanche 2WD-6 Ft. Box(1986)
66=Comanche 2WD-7 Ft. Box(1986)
63=Comanche 4WD-6 Ft. Box(1986)
65=Comanche 4WD-7 Ft. Box(1986)
15=Grand Wagoneer 4 Dr.(1984-86)
25=J-10 Truck 7 Ft. Box(1981-84)
26=J10 Truck 8 Ft. Box(1981-86)
27=J-20 Truck 8 Ft. Box(1981-86)
15=Wagoneer 4 Dr.(1981-83)
75=Wagoneer 4WD-4 Dr.(1984-86)

BODY
CJ=CJ-5, CJ-6, CJ-7, CJ-8, Scrambler(1981-86)
MJ=Comanche Pickup(1986)

STYLES
SJ=Wagoneer(1981-83), Grand Wagoneer(1984-86), Cherokee(1981-83), J-10, J-20(1981-86)
XJ=Wagoneer(1984-86), Cherokee(1984-86)

AR = Use as Required - = Non Illustrated Part P.A.R. = Paint as Required

« RETURN TO GROUP INDEX

LAMPS--REAR CHEROKEE, WAGONEER, COMANCHE
Figure 8-8000

81J08 8000

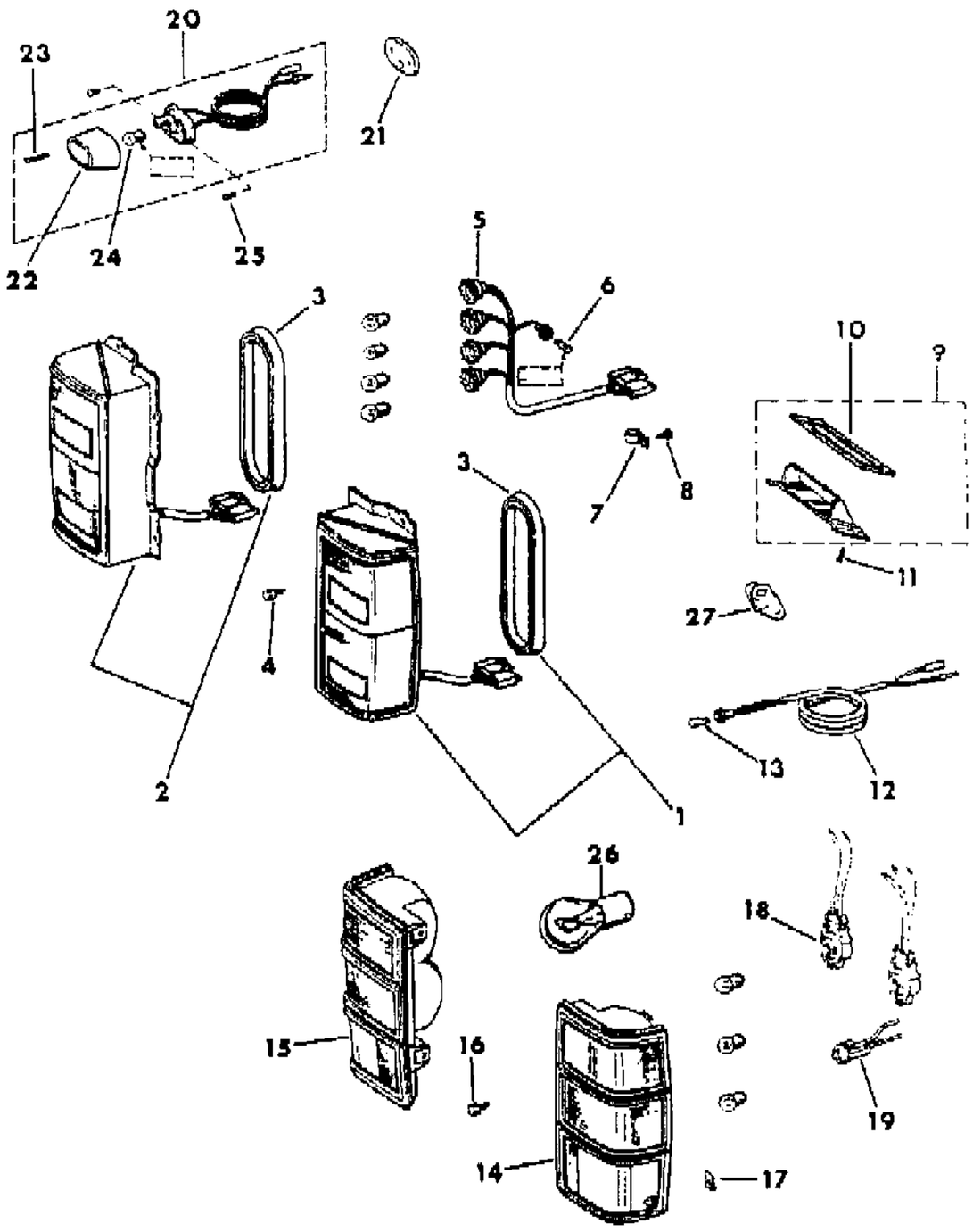

ITEM	PART NUMBER	QTY	BODY	MODEL	DESCRIPTION
1					TAIL LAMP, Right ***
	5600 0116	1	SJ		Red
	5600 0316	1	XJ		Red/Amber, w/Back-Up Lamp
	5600 0644	1			Economic Commission of Europe
2					TAIL LAMP, Left ***
	5600 0117	1	SJ		Red
	5600 0317	1	XJ		Amber
	5600 0645	1			Economic Commission of Europe
3	5600 0131	2			GASKET
4	3420 1706	AR			SCREW
5					WIRING, Tail Lamp
	5600 0628	2			Wagoneer
	5600 0597	1			Cherokee
	5600 0663	2			Economic Commission of Europe
6	J448 9123	2			BULB, "97"
7	J400 0553	2			CLIP
8	1150 2843	2			SCREW
9					LAMP, License
	5600 0409	1			Clear
	5600 0673	1			Black
	5600 0653	1			Economic Commission of Europe
10	5600 0411	1			GASKET
11	3420 1502	2			SCREW
12					WIRING, License Lamp
	5600 0550	1			
	5600 1434	1			Economic Commission of Europe
	5600 0664	1			Japan
13	J448 8426	1			BULB, "168"
14					TAIL LAMP, Right ***
	5600 0848	1	MJ		Red
	5600 1352	1			Black
	5600 1354	1			Bright
15					TAIL LAMP, Left ***
	5600 0849	1	MJ		Red
	5600 1353	1			Black
	5600 1355	1			Bright
16	3420 1426	AR			SCREW
17	3420 1265	AR			NUT
18	J812 8931	AR			SOCKET

MODEL CODES

16=Cherokee 2 Dr.(1981-83)
17=Cherokee 2 Dr.(1981-83)
73=Cherokee 2WD-2 Dr.(1984-86)
74=Cherokee 2WD-4 Dr.(1984-86)
18=Cherokee 4 Dr.(1981-83)
77=Cherokee 4WD-2 Dr.(1984-86)
78=Cherokee 4WD-4 Dr.(1984-86)
85=CJ-5 (1981-83)
86=CJ-6(1981)
87=CJ-7(1981-86)
88=CJ-8, Scrambler(1981-86)
64=Comanche 2WD-6 Ft. Box(1986)
66=Comanche 2WD-7 Ft. Box(1986)
63=Comanche 4WD-6 Ft. Box(1986)
65=Comanche 4WD-7 Ft. Box(1986)
15=Grand Wagoneer 4 Dr.(1984-86)
25=J-10 Truck 7 Ft. Box(1981-84)
26=J10 Truck 8 Ft. Box(1981-86)
27=J-20 Truck 8 Ft. Box(1981-86)
15=Wagoneer 4 Dr.(1981-83)
75=Wagoneer 4WD-4 Dr.(1984-86)

BODY
CJ=CJ-5, CJ-6, CJ-7, CJ-8, Scrambler(1981-86)
MJ=Comanche Pickup(1986)

STYLES
SJ=Wagoneer(1981-83), Grand Wagoneer(1984-86), Cherokee(1981-83), J-10, J-20(1981-86)
XJ=Wagoneer(1984-86), Cherokee(1984-86)

AR = Use as Required - = Non Illustrated Part P.A.R. = Paint as Required

« RETURN TO GROUP INDEX »

LAMPS--REAR CHEROKEE, WAGONEER, COMANCHE
Figure 8-8000

81J08 8000

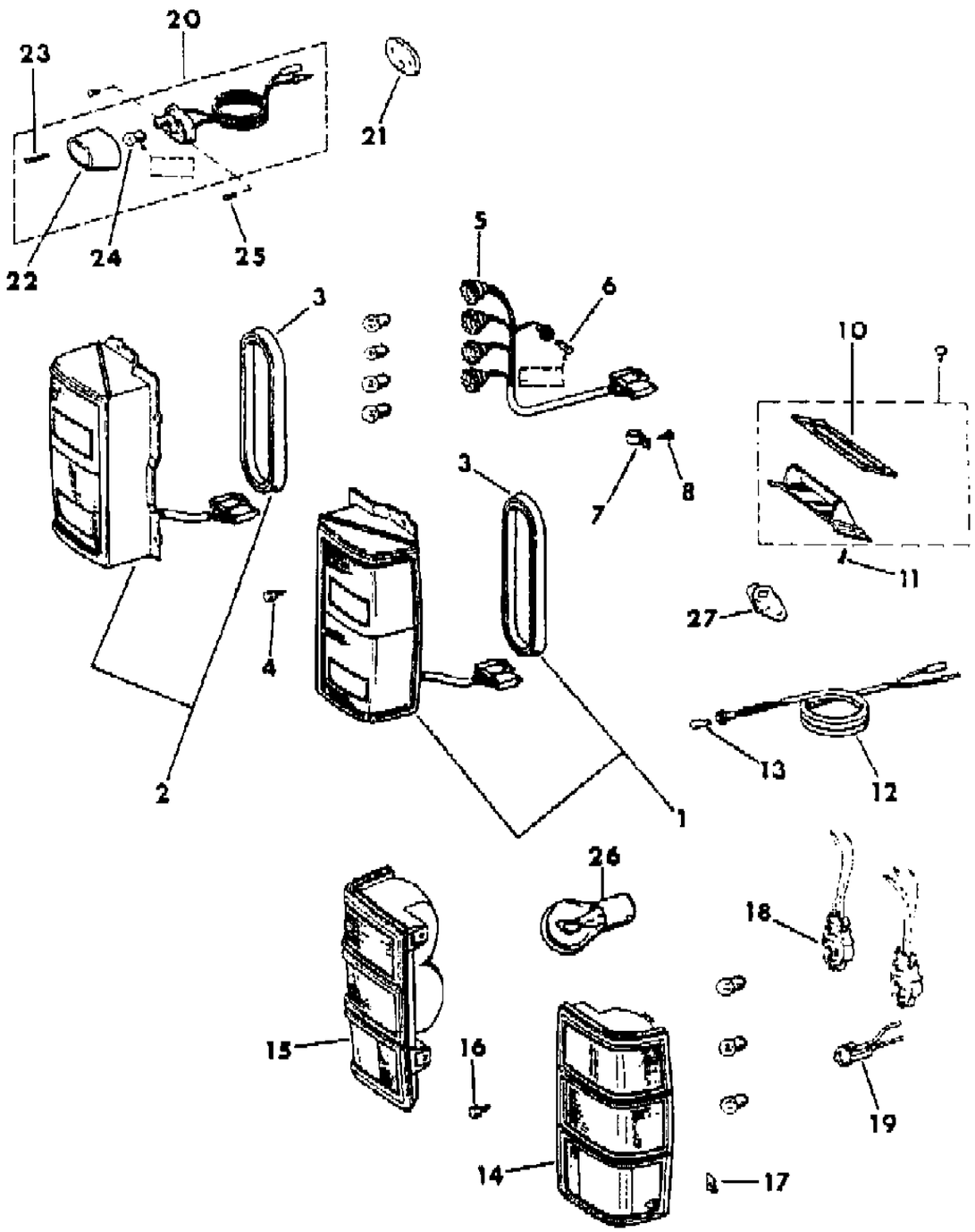

ITEM	PART NUMBER	QTY	BODY	MODEL	DESCRIPTION
19	8350 2744	2			SOCKET
20	5600 0674	1			LAMP, License
21	5600 0675	1			GASKET
22	8350 0452	1			COVER
23	8350 0451	2			SCREW
24	J947 1777	1			BULB, "97"
25					SCREW
	3420 1372	2		XJ	
	3420 1467	2		MJ	
26					BULB
	J947 1777	AR			"97"
	J320 9543	AR			"1156"
	J943 8848	AR			"2057"
	J575 7455	AR			"P25-1"
	J575 7450	AR			"P25-2"

MODEL CODES
16=Cherokee 2 Dr.(1981-83)
17=Cherokee 2 Dr.(1981-83)
73=Cherokee 2WD-2 Dr.(1984-86)
74=Cherokee 2WD-4 Dr.(1984-86)
18=Cherokee 4 Dr.(1981-83)
77=Cherokee 4WD-2 Dr.(1984-86)
78=Cherokee 4WD-4 Dr.(1984-86)
85=CJ-5 (1981-83)
86=CJ-6(1981)
87=CJ-7(1981-86)
88=CJ-8, Scrambler(1981-86)
64=Comanche 2WD-6 Ft. Box(1986)
66=Comanche 2WD-7 Ft. Box(1986)
63=Comanche 4WD-6 Ft. Box(1986)
65=Comanche 4WD-7 Ft. Box(1986)
15=Grand Wagoneer 4 Dr.(1984-86)
25=J-10 Truck 7 Ft. Box(1981-84)
26=J10 Truck 8 Ft. Box(1981-86)
27=J-20 Truck 8 Ft. Box(1981-86)
15=Wagoneer 4 Dr.(1981-83)
75=Wagoneer 4WD-4 Dr.(1984-86)

BODY
CJ=CJ-5, CJ-6, CJ-7, CJ-8, Scrambler(1981-86)
MJ=Comanche Pickup(1986)

STYLES
SJ=Wagoneer(1981-83), Grand Wagoneer(1984-86), Cherokee(1981-83), J-10, J-20(1981-86)
XJ=Wagoneer(1984-86), Cherokee(1984-86)

AR = Use as Required - = Non Illustrated Part P.A.R. = Paint as Required

« RETURN TO GROUP INDEX

LAMPS--REAR CHEROKEE 1981
Figure 8-8100

81J08 8100

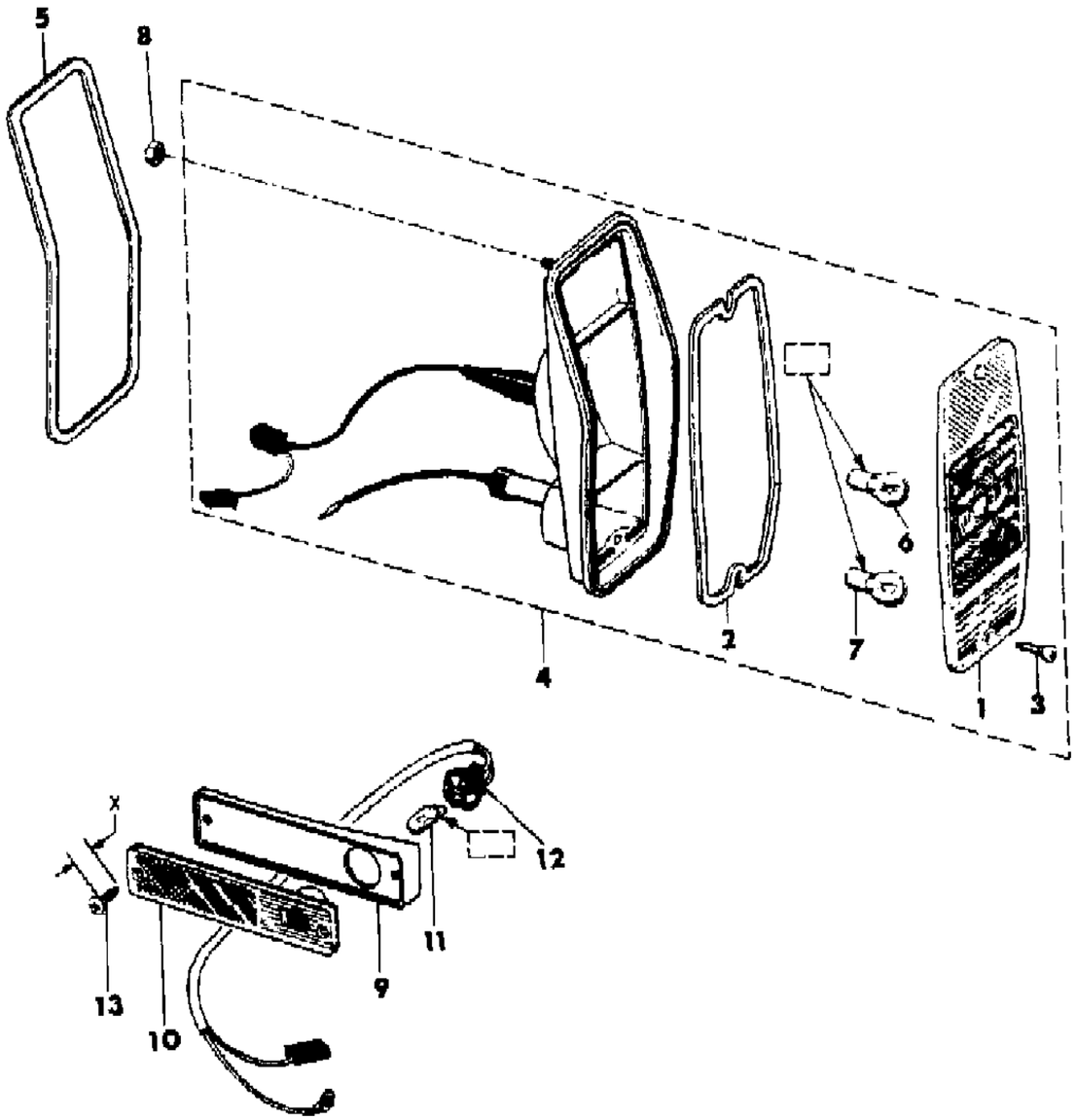

ITEM	PART NUMBER	QTY	BODY	MODEL	DESCRIPTION
1	J812 4341	2			LENS, Tail Lamp
2	J812 4342	2			GASKET
3	J097 9936	4			SCREW
4	J545 1037	2			TAIL LAMP ***
5	J812 4343	2			GASKET
6	J320 9544	2			BULB, "1157"
7	J320 9543	2			BULB, "1156"
8	J027 1172	AR			NUT
9	J098 1720	2			BASE
10	J099 4021	2			LENS
11	J099 4037	2			BULB, "194"
12	J099 4034	2			WIRING
13					SCREW
	J098 5199	AR			.75"
	J098 5198	AR			1.25"

MODEL CODES

16=Cherokee 2 Dr.(1981-83)
17=Cherokee 2 Dr.(1981-83)
73=Cherokee 2WD-2 Dr.(1984-86)
74=Cherokee 2WD-4 Dr.(1984-86)
18=Cherokee 4 Dr.(1981-83)
77=Cherokee 4WD-2 Dr.(1984-86)
78=Cherokee 4WD-4 Dr.(1984-86)
85=CJ-5 (1981-83)
86=CJ-6(1981)
87=CJ-7(1981-86)
88=CJ-8, Scrambler(1981-86)
64=Comanche 2WD-6 Ft. Box(1986)
66=Comanche 2WD-7 Ft. Box(1986)
63=Comanche 4WD-6 Ft. Box(1986)
65=Comanche 4WD-7 Ft. Box(1986)
15=Grand Wagoneer 4 Dr.(1984-86)
25=J-10 Truck 7 Ft. Box(1981-84)
26=J10 Truck 8 Ft. Box(1981-86)
27=J-20 Truck 8 Ft. Box(1981-86)
15=Wagoneer 4 Dr.(1981-83)
75=Wagoneer 4WD-4 Dr.(1984-86)

BODY
CJ=CJ-5, CJ-6, CJ-7, CJ-8, Scrambler(1981-86)
MJ=Comanche Pickup(1986)

STYLES
SJ=Wagoneer(1981-83), Grand Wagoneer(1984-86), Cherokee(1981-83), J-10, J-20(1981-86)
XJ=Wagoneer(1984-86), Cherokee(1984-86)

AR = Use as Required - = Non Illustrated Part P.A.R. = Paint as Required

« RETURN TO GROUP INDEX

LAMPS--REAR SJ WAGONEER 1981-1983 1/2
Figure 8-8200

81J08 8200

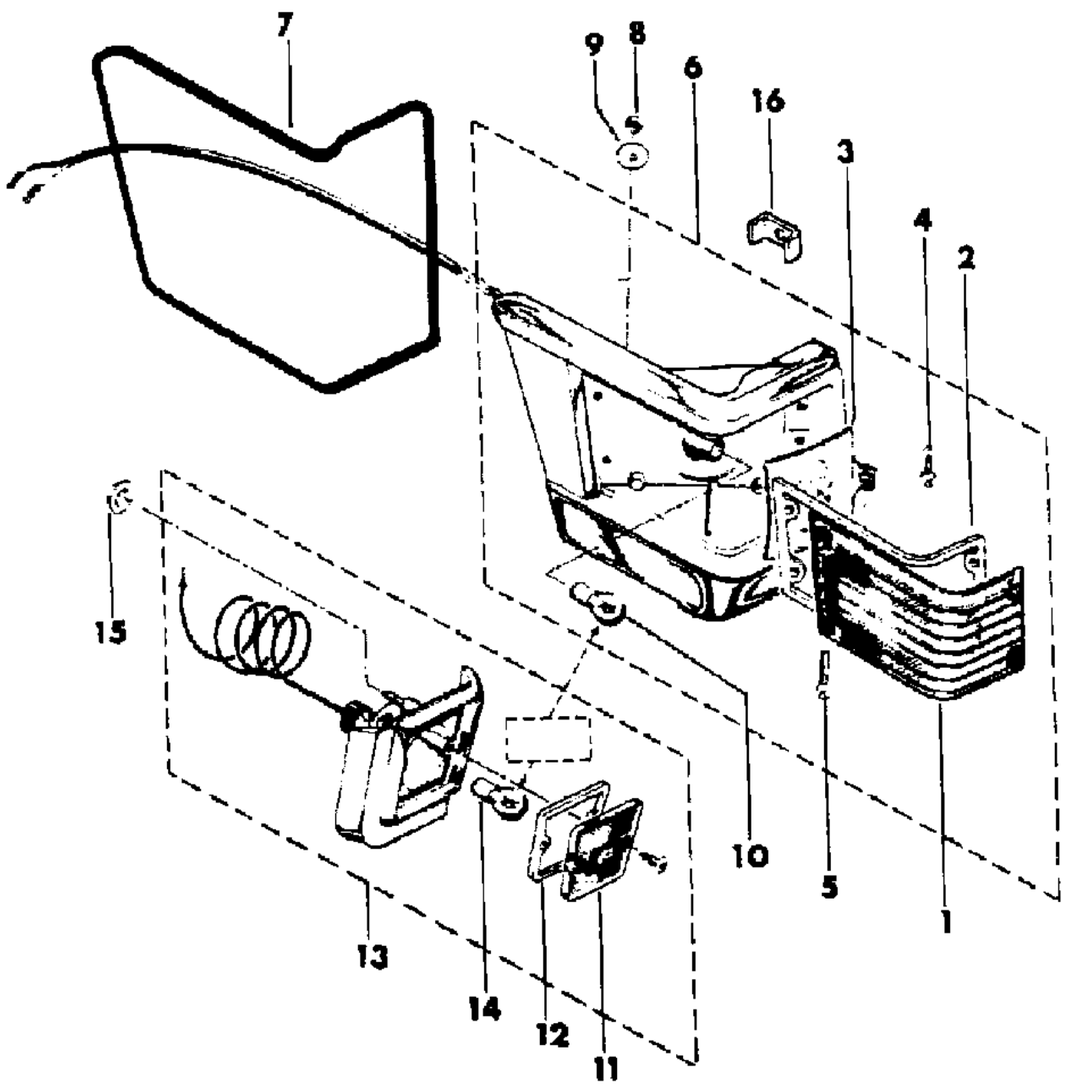

ITEM	PART NUMBER	QTY	BODY	MODEL	DESCRIPTION
1					LENS, Tail Lamp
	J545 9552	1			Right
	J545 9551	1			Left
2					GASKET
	J093 2159	1			Right
	J093 1642	1			Left
3	J545 9550	2			LENS
4	S016 7098	AR			SCREW
5	J999 8217	AR			SCREW
6					TAIL LAMP ***
	J575 0336	1			Right
	J575 0335	1			Left
7					WELT
	J575 0338	1			Right
	J575 0337	1			Left
8	J027 1166	AR			NUT
9	S941 7373	AR			WASHER
10	J320 9544	2			BULB, "1157"
11	J535 0439	1			LENS, Lt.
	J535 0440	1			Rt.
12	J097 9937	1			GASKET
13	J098 8325	1			LAMP, Back-Up
14	J320 9543	2			BULB, "1156"
15	S942 0289	AR			NUT
16	J097 0487	2			SPACER

MODEL CODES

16=Cherokee 2 Dr.(1981-83)
17=Cherokee 2 Dr.(1981-83)
73=Cherokee 2WD-2 Dr.(1984-86)
74=Cherokee 2WD-4 Dr.(1984-86)
18=Cherokee 4 Dr.(1981-83)
77=Cherokee 4WD-2 Dr.(1984-86)
78=Cherokee 4WD-4 Dr.(1984-86)
85=CJ-5 (1981-83)
86=CJ-6(1981)
87=CJ-7(1981-86)
88=CJ-8, Scrambler(1981-86)
64=Comanche 2WD-6 Ft. Box(1986)
66=Comanche 2WD-7 Ft. Box(1986)
63=Comanche 4WD-6 Ft. Box(1986)
65=Comanche 4WD-7 Ft. Box(1986)
15=Grand Wagoneer 4 Dr.(1984-86)
25=J-10 Truck 7 Ft. Box(1981-84)
26=J10 Truck 8 Ft. Box(1981-86)
27=J-20 Truck 8 Ft. Box(1981-86)
15=Wagoneer 4 Dr.(1981-83)
75=Wagoneer 4WD-4 Dr.(1984-86)

BODY
CJ=CJ-5, CJ-6, CJ-7, CJ-8, Scrambler(1981-86)
MJ=Comanche Pickup(1986)

STYLES
SJ=Wagoneer(1981-83), Grand Wagoneer(1984-86), Cherokee(1981-83), J-10, J-20(1981-86)
XJ=Wagoneer(1984-86), Cherokee(1984-86)

AR = Use as Required - = Non Illustrated Part P.A.R. = Paint as Required

« RETURN TO GROUP INDEX

LAMPS--REAR SJ WAGONEER, SJ CHEROKEE 1982-83
Figure 8-8300

81J08 8300

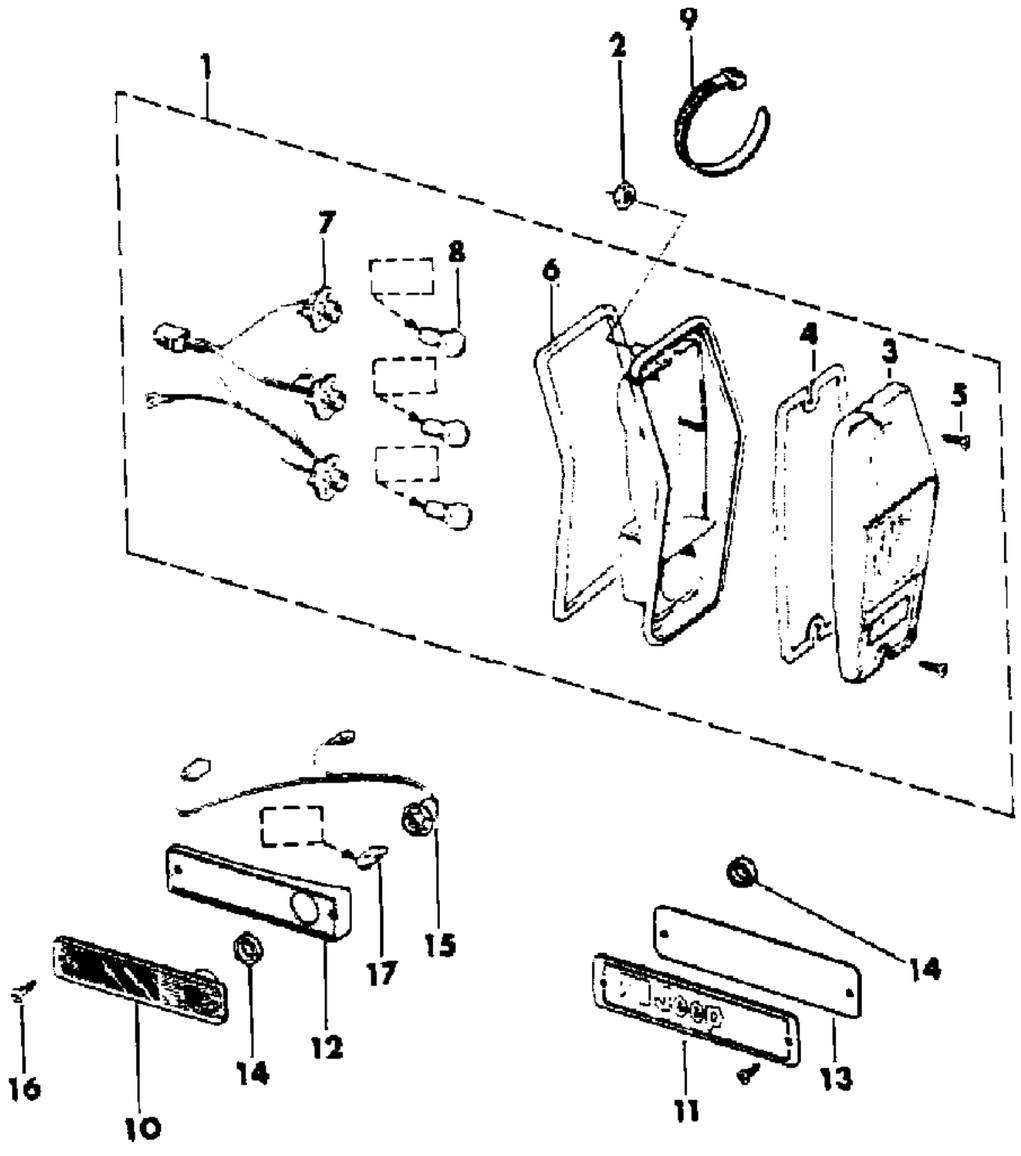

ITEM	PART NUMBER	QTY	BODY	MODEL	DESCRIPTION
1					TAIL LAMP ***
	J576 1508	2			
	J575 2309	2			EXPORT
2	J027 1172	AR			NUT
3					LENS, Tail Lamp
	J813 4111	2			
	J575 2736	2			EXPORT
4	J812 4342	2			GASKET
5	J097 9936	AR			SCREW
6	J812 4343	2			GASKET
7	J575 2600	2			WIRING
8					BULB
	J320 9543	AR			"1156"
	J320 9544	AR			"1157"
	J575 7455	AR			"P25-1"
	J575 7450	AR			"P25-2"
9	J322 3227	1			STRAP
10	J099 4021	2			LAMP, Marker
11	J575 2772	2			NAME PLATE
12					BASE
	J576 4646-7	1		15	
	J098 1720	2		16,17,1	
13	J575 2773	2			PLATE
14	5505 2547	2			SEAL
15	J099 4034	2			WIRING
16	J400 0478	2			SCREW
17	J099 4037	2			BULB, "194"

MODEL CODES

16=Cherokee 2 Dr.(1981-83)
17=Cherokee 2 Dr.(1981-83)
73=Cherokee 2WD-2 Dr.(1984-86)
74=Cherokee 2WD-4 Dr.(1984-86)
18=Cherokee 4 Dr.(1981-83)
77=Cherokee 4WD-2 Dr.(1984-86)
78=Cherokee 4WD-4 Dr.(1984-86)
85=CJ-5 (1981-83)
86=CJ-6(1981)
87=CJ-7(1981-86)
88=CJ-8, Scrambler(1981-86)
64=Comanche 2WD-6 Ft. Box(1986)
66=Comanche 2WD-7 Ft. Box(1986)
63=Comanche 4WD-6 Ft. Box(1986)
65=Comanche 4WD-7 Ft. Box(1986)
15=Grand Wagoneer 4 Dr.(1984-86)
25=J-10 Truck 7 Ft. Box(1981-84)
26=J10 Truck 8 Ft. Box(1981-86)
27=J-20 Truck 8 Ft. Box(1981-86)
15=Wagoneer 4 Dr.(1981-83)
75=Wagoneer 4WD-4 Dr.(1984-86)

BODY

CJ=CJ-5, CJ-6, CJ-7, CJ-8, Scrambler(1981-86)
MJ=Comanche Pickup(1986)

STYLES

SJ=Wagoneer(1981-83), Grand Wagoneer(1984-86), Cherokee(1981-83), J-10, J-20(1981-86)
XJ=Wagoneer(1984-86), Cherokee(1984-86)

AR = Use as Required - = Non Illustrated Part P.A.R. = Paint as Required

« RETURN TO GROUP INDEX

LAMP--REAR TOWNSIDE-J10, J20
Figure 8-8400

81J08 8400

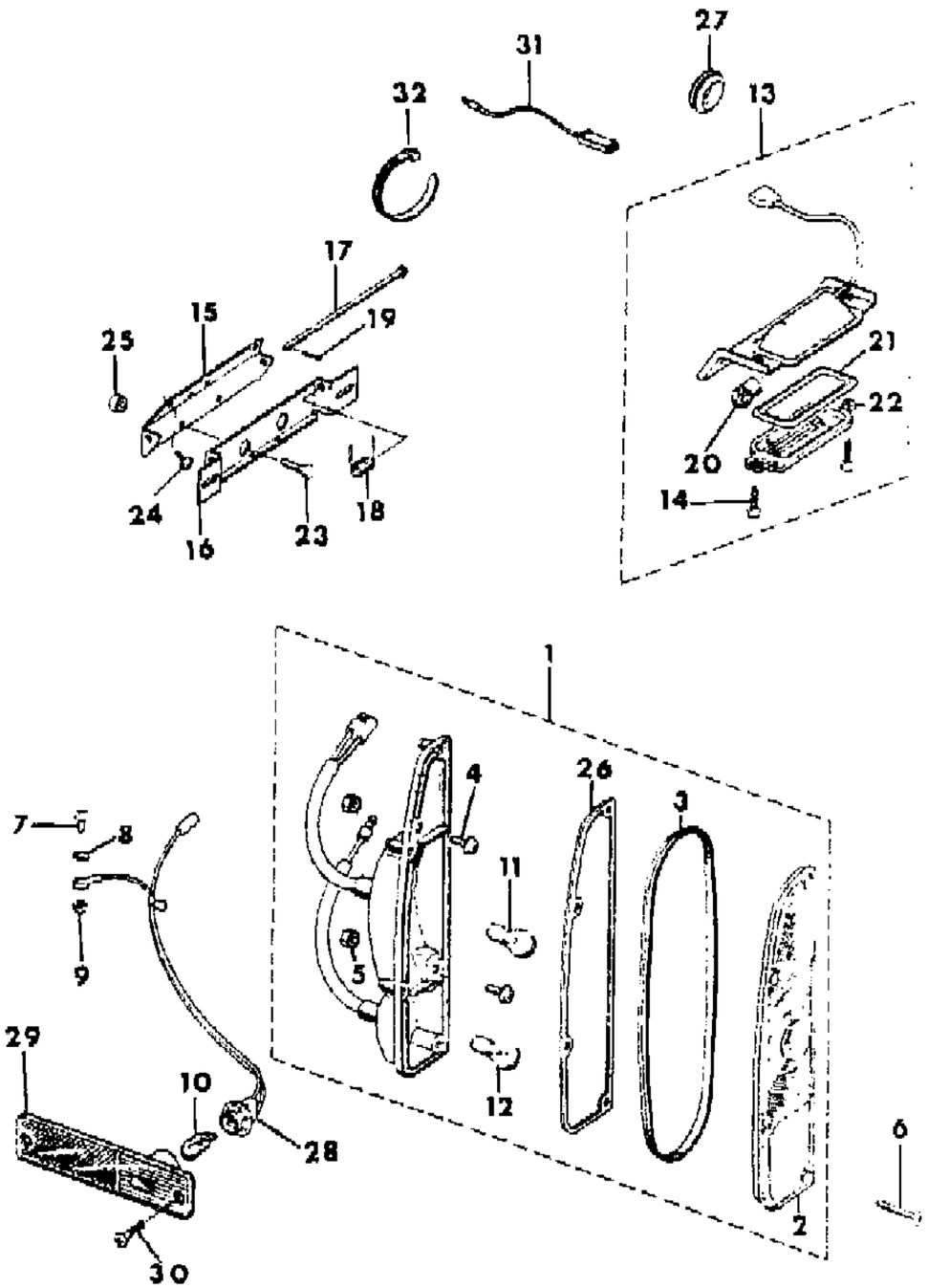

ITEM	PART NUMBER	QTY	BODY	MODEL	DESCRIPTION
1					TAIL LAMP, Assembly ***
	J098 7832	1			Right
	J098 7831	1			Left
2	J812 2678-9	1			LENS, Tail Lamp
3	J545 0274	2			GASKET
4	J019 1985	4			SCREW
5	J027 1172	4			NUT
6	J942 5250	8			SCREW
7	J045 4783	2			SCREW
8	J017 8378	2			WASHER
9	J012 0361	2			NUT
10	J942 1330	2			BULB, "194"
11	J320 9544	2			BULB, "1157"
12	J320 9543	2			BULB, "1156"
13	J093 0887	1			LAMP, License
14	J018 7303	2			SCREW
15	J093 1389	1			BRACKET
16	J093 1390	1			HINGE
17	J093 1391	1			PIN
18	J093 1392	1			SPRING
19	J011 2726	1			PIN
20	J093 8900	1			BULB, "1155"
21	J093 0889	1			GASKET
22	J093 0890	1			LENS
23	J400 4081	2			SCREW
24	J018 7303	2			SCREW
25	J012 0368	2			NUT
26	J812 2676	2			GASKET
27	J012 0408	1			GROMMET
28	J098 9428	1			WIRING
29	J099 4021	2			LAMP, Marker
30	J400 5821	4			SCREW
31	J545 0045	1			WIRE
32	J322 3227	5			STRAP

MODEL CODES

16=Cherokee 2 Dr.(1981-83)
17=Cherokee 2 Dr.(1981-83)
73=Cherokee 2WD-2 Dr.(1984-86)
74=Cherokee 2WD-4 Dr.(1984-86)
18=Cherokee 4 Dr.(1981-83)
77=Cherokee 4WD-2 Dr.(1984-86)
78=Cherokee 4WD-4 Dr.(1984-86)
85=CJ-5 (1981-83)
86=CJ-6(1981)
87=CJ-7(1981-86)
88=CJ-8, Scrambler(1981-86)
64=Comanche 2WD-6 Ft. Box(1986)
66=Comanche 2WD-7 Ft. Box(1986)
63=Comanche 4WD-6 Ft. Box(1986)
65=Comanche 4WD-7 Ft. Box(1986)
15=Grand Wagoneer 4 Dr.(1984-86)
25=J-10 Truck 7 Ft. Box(1981-84)
26=J10 Truck 8 Ft. Box(1981-86)
27=J-20 Truck 8 Ft. Box(1981-86)
15=Wagoneer 4 Dr.(1981-83)
75=Wagoneer 4WD-4 Dr.(1984-86)

BODY
CJ=CJ-5, CJ-6, CJ-7, CJ-8, Scrambler(1981-86)
MJ=Comanche Pickup(1986)

STYLES
SJ=Wagoneer(1981-83), Grand Wagoneer(1984-86), Cherokee(1981-83), J-10, J-20(1981-86)
XJ=Wagoneer(1984-86), Cherokee(1984-86)

AR = Use as Required - = Non Illustrated Part P.A.R. = Paint as Required

« RETURN TO GROUP INDEX

LAMP--REAR SPORTSIDE-J10, J20
Figure 8-8500

81J08 8500

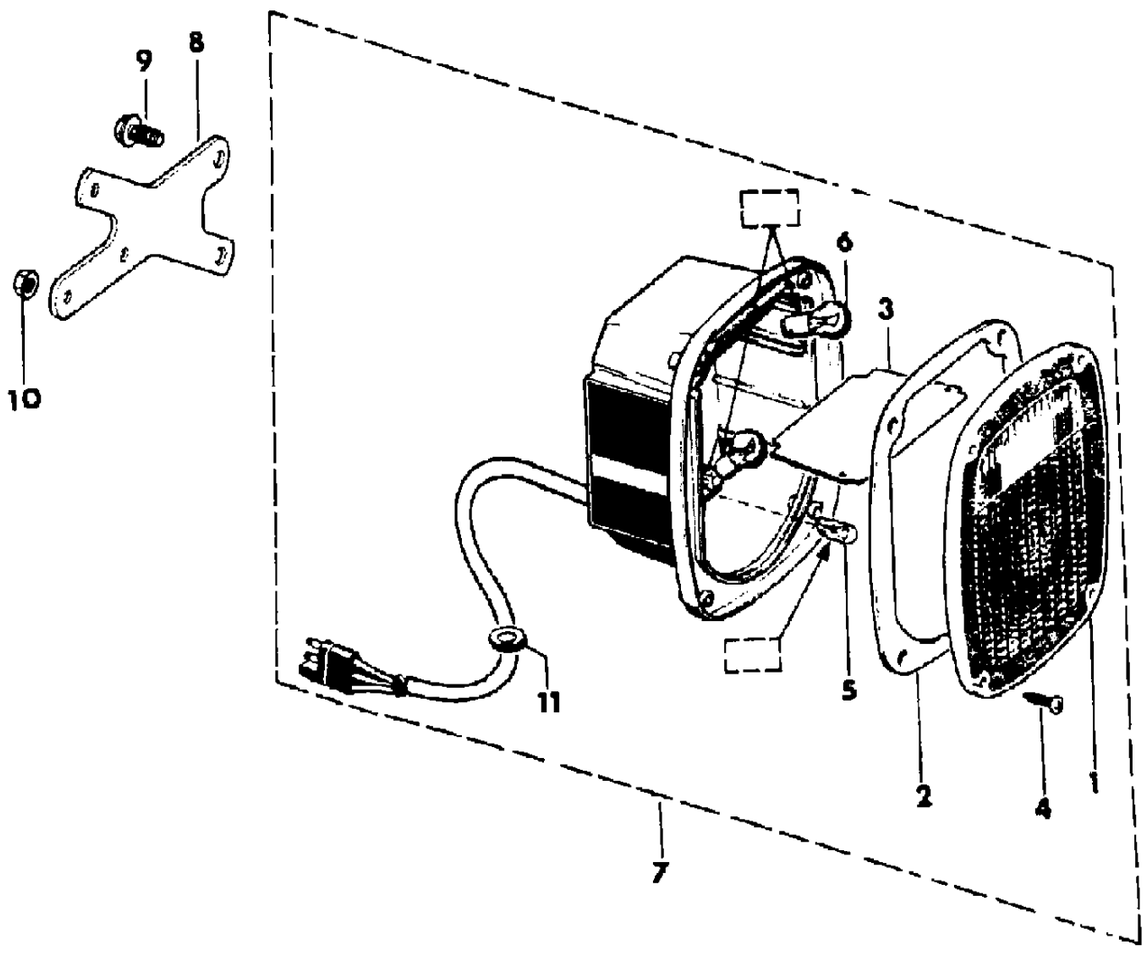

ITEM	PART NUMBER	QTY	BODY	MODEL	DESCRIPTION
1					LENS, Tail Lamp
	J545 7724	2			Sportside
	J812 2928	2			w/o Pickup Box
2					GASKET
	J813 2853	2			Sportside
	J099 8472	2			w/o Pickup Box
3	J545 7725	2			BAFFLE ***
4					SCREW
	J812 3288	8			Sportside
	J999 8349	8			w/o Pickup Box
5	J099 4037	2			BULB, "194"
6					BULB
	J320 9543	2			"1156"
	J320 9544	2			"1157"

MODEL CODES

16=Cherokee 2 Dr.(1981-83)
17=Cherokee 2 Dr.(1981-83)
73=Cherokee 2WD-2 Dr.(1984-86)
74=Cherokee 2WD-4 Dr.(1984-86)
18=Cherokee 4 Dr.(1981-83)
77=Cherokee 4WD-2 Dr.(1984-86)
78=Cherokee 4WD-4 Dr.(1984-86)
85=CJ-5 (1981-83)
86=CJ-6(1981)
87=CJ-7(1981-86)
88=CJ-8, Scrambler(1981-86)
64=Comanche 2WD-6 Ft. Box(1986)
66=Comanche 2WD-7 Ft. Box(1986)
63=Comanche 4WD-6 Ft. Box(1986)
65=Comanche 4WD-7 Ft. Box(1986)
15=Grand Wagoneer 4 Dr.(1984-86)
25=J-10 Truck 7 Ft. Box(1981-84)
26=J10 Truck 8 Ft. Box(1981-86)
27=J-20 Truck 8 Ft. Box(1981-86)
15=Wagoneer 4 Dr.(1981-83)
75=Wagoneer 4WD-4 Dr.(1984-86)

BODY
CJ=CJ-5, CJ-6, CJ-7, CJ-8, Scrambler(1981-86)
MJ=Comanche Pickup(1986)

STYLES
SJ=Wagoneer(1981-83), Grand Wagoneer(1984-86), Cherokee(1981-83), J-10, J-20(1981-86)
XJ=Wagoneer(1984-86), Cherokee(1984-86)

AR = Use as Required - = Non Illustrated Part P.A.R. = Paint as Required

« RETURN TO GROUP INDEX

LAMP--LICENSE SJ CHEROKEE, SJ WAGONEER
Figure 8-8600

81J08 8600

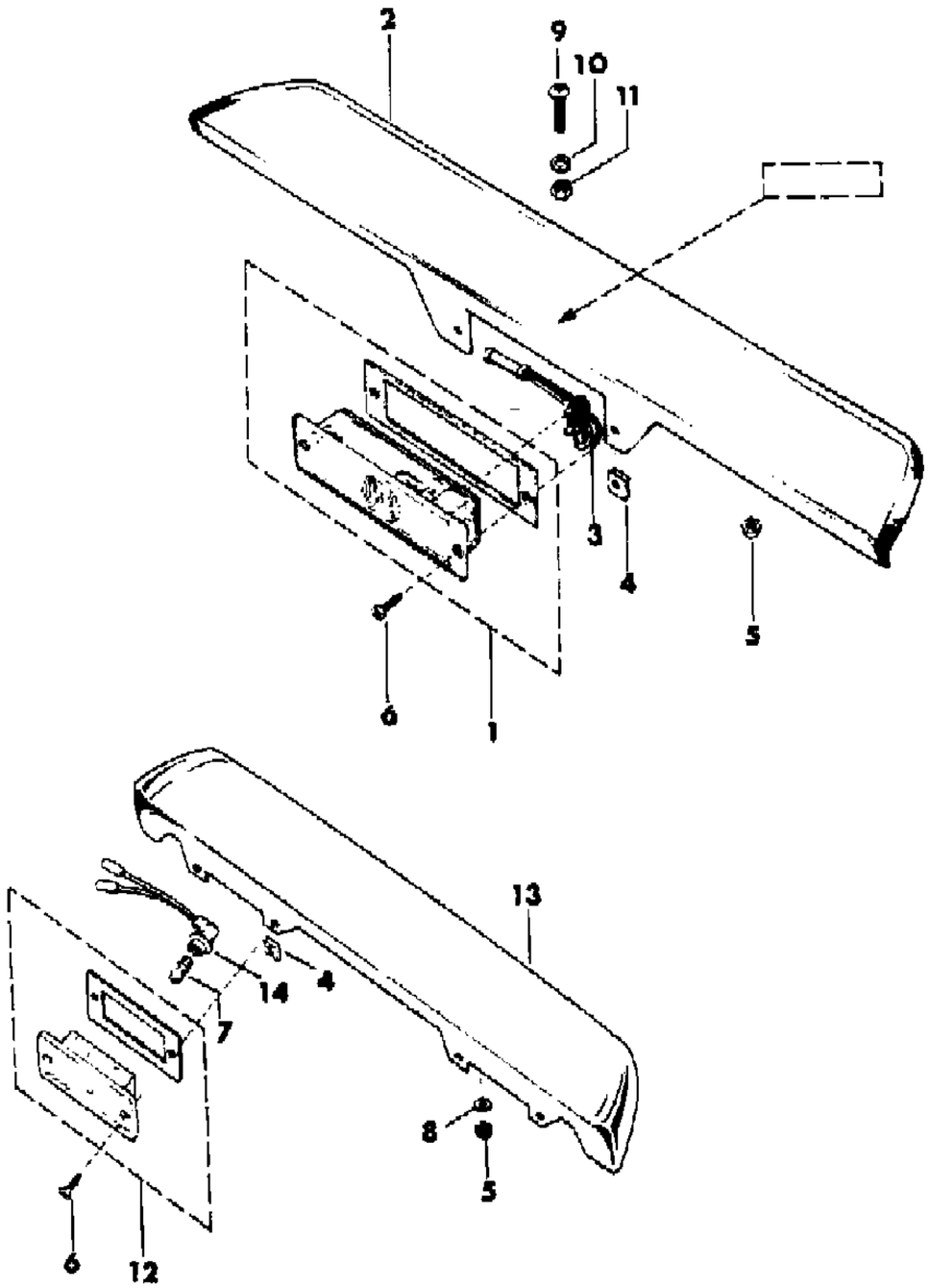

ITEM	PART NUMBER	QTY	BODY	MODEL	DESCRIPTION
1	J367 0544	1			LAMP, License
2					HOUSING
	J545 1033	1			"Wagoneer"
	5501 3579	1			"Jeep"
	J545 1469	1			"Cherokee"
3	J812 5407	1			WIRE
4	J044 5466	2			NUT
5	J027 1166	4			NUT
6	J016 1798	2			SCREW
7	J813 3752	1			BULB, EXPORT
8	J400 6456	4			SPACER
9	J045 4783	1			SCREW
10	J017 8378	1			WASHER
11	J012 0361	1			NUT
12	J575 8230	2			LAMP, License, EXPORT
13	J575 2807	1			HOUSING, EXPORT
14	J813 3799	1			SOCKET, EXPORT

MODEL CODES

16=Cherokee 2 Dr.(1981-83)
17=Cherokee 2 Dr.(1981-83)
73=Cherokee 2WD-2 Dr.(1984-86)
74=Cherokee 2WD-4 Dr.(1984-86)
18=Cherokee 4 Dr.(1981-83)
77=Cherokee 4WD-2 Dr.(1984-86)
78=Cherokee 4WD-4 Dr.(1984-86)
85=CJ-5 (1981-83)
86=CJ-6(1981)
87=CJ-7(1981-86)
88=CJ-8, Scrambler(1981-86)
64=Comanche 2WD-6 Ft. Box(1986)
66=Comanche 2WD-7 Ft. Box(1986)
63=Comanche 4WD-6 Ft. Box(1986)
65=Comanche 4WD-7 Ft. Box(1986)
15=Grand Wagoneer 4 Dr.(1984-86)
25=J-10 Truck 7 Ft. Box(1981-84)
26=J10 Truck 8 Ft. Box(1981-86)
27=J-20 Truck 8 Ft. Box(1981-86)
15=Wagoneer 4 Dr.(1981-83)
75=Wagoneer 4WD-4 Dr.(1984-86)

BODY
CJ=CJ-5, CJ-6, CJ-7, CJ-8, Scrambler(1981-86)
MJ=Comanche Pickup(1986)

STYLES
SJ=Wagoneer(1981-83), Grand Wagoneer(1984-86), Cherokee(1981-83), J-10, J-20(1981-86)
XJ=Wagoneer(1984-86), Cherokee(1984-86)

AR = Use as Required - = Non Illustrated Part P.A.R. = Paint as Required

« RETURN TO GROUP INDEX

LAMP--INTERIOR AND UNDERHOOD CJ-5,6,7,8 SCRAMBLER
Figure 8-8700

81J08 8700

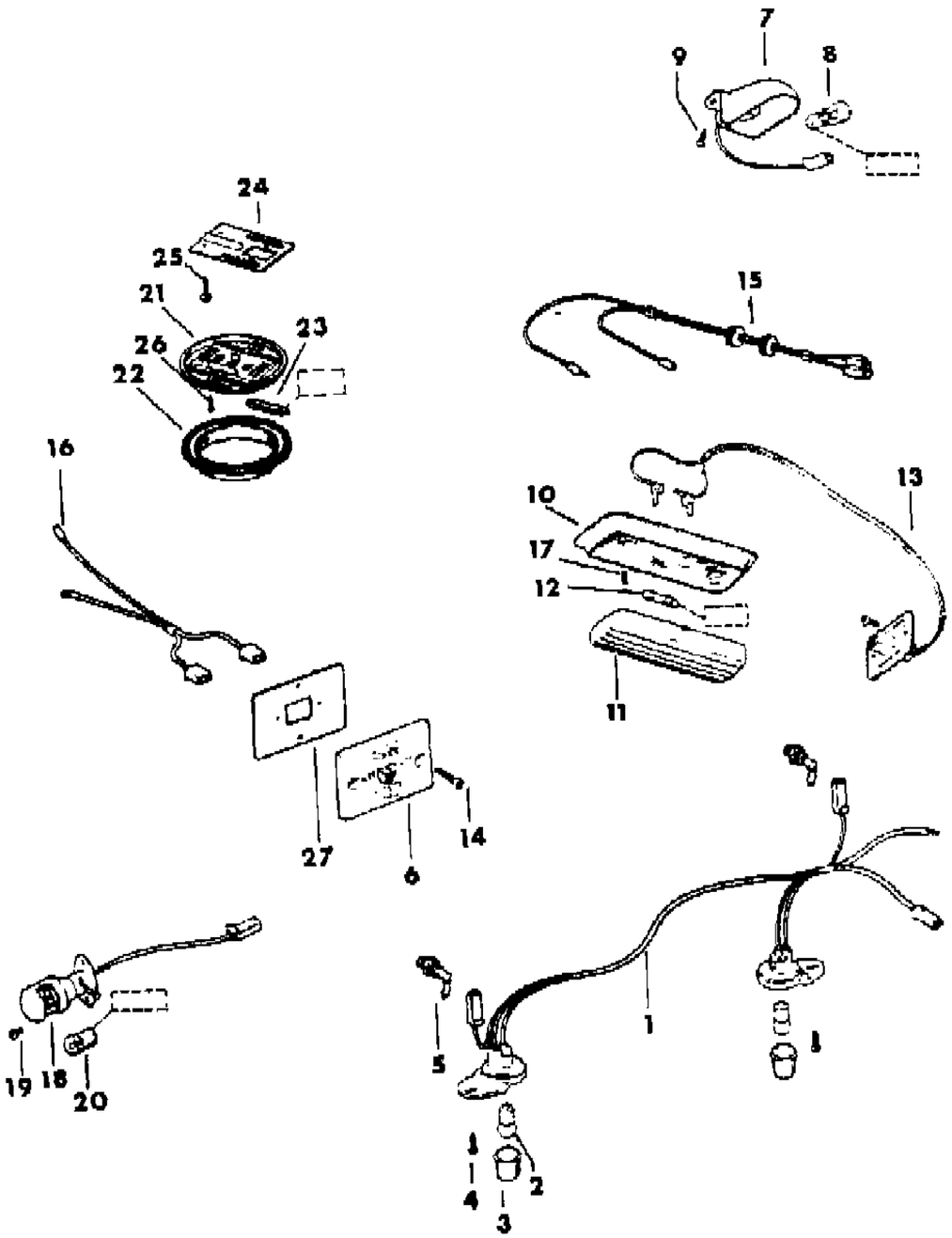

ITEM	PART NUMBER	QTY	BODY	MODEL	DESCRIPTION
1					LAMP, Courtesy
	J575 8897	1			With Door Switches
	J545 0122	1			Without Door Switches
2	J014 2452				BULB, "89"
3	J545 0116	2			LENS
4	J400 2457	2			SCREW
5	J576 1248	1			SWITCH, Dome Lamp
6	J545 1489	1			SWITCH, Dome Lamp
7	J324 0729	1			LAMP, Underhood
8	J812 5442	1			BULB, "105"
9	3420 1691	2			SCREW
10	J095 9999	1			BASE
11	J095 9978	1			LENS
12	J096 0531	1			BULB, "212"
13					WIRING
	J575 2053	1			
	J805 3212	1			FRONT, EXPORT
	J805 3213	1			REAR, EXPORT
14	J448 9487	4			SCREW
15	J805 3211	1			WIRING, Dome Lamp
16	J805 3214	1			WIRING, Switch
17	S016 1812	2			SCREW
18	J599 5493	1			LAMP, Map
19	J942 0688	2			SCREW
20	J014 2450	1			BULB, "67"
21	J575 1234	1			BASE
22	J368 9643	2			LENS
23	J400 3086	2			BULB, "561"
24	J805 2259	2			PLATE
25	J400 7487	4			SCREW
26	3420 1468	4			SCREW
27	J805 2466	1			PLATE

MODEL CODES

16=Cherokee 2 Dr.(1981-83)
17=Cherokee 2 Dr.(1981-83)
73=Cherokee 2WD-2 Dr.(1984-86)
74=Cherokee 2WD-4 Dr.(1984-86)
18=Cherokee 4 Dr.(1981-83)
77=Cherokee 4WD-2 Dr.(1984-86)
78=Cherokee 4WD-4 Dr.(1984-86)
85=CJ-5 (1981-83)
86=CJ-6(1981)
87=CJ-7(1981-86)
88=CJ-8, Scrambler(1981-86)
64=Comanche 2WD-6 Ft. Box(1986)
66=Comanche 2WD-7 Ft. Box(1986)
63=Comanche 4WD-6 Ft. Box(1986)
65=Comanche 4WD-7 Ft. Box(1986)
15=Grand Wagoneer 4 Dr.(1984-86)
25=J-10 Truck 7 Ft. Box(1981-84)
26=J10 Truck 8 Ft. Box(1981-86)
27=J-20 Truck 8 Ft. Box(1981-86)
15=Wagoneer 4 Dr.(1981-83)
75=Wagoneer 4WD-4 Dr.(1984-86)

BODY
CJ=CJ-5, CJ-6, CJ-7, CJ-8, Scrambler(1981-86)
MJ=Comanche Pickup(1986)

STYLES
SJ=Wagoneer(1981-83), Grand Wagoneer(1984-86), Cherokee(1981-83), J-10, J-20(1981-86)
XJ=Wagoneer(1984-86), Cherokee(1984-86)

AR = Use as Required - = Non Illustrated Part P.A.R. = Paint as Required

« RETURN TO GROUP INDEX

LAMP--INTERIOR EXPORT WORLD CAB
Figure 8-8800

81J08 8800

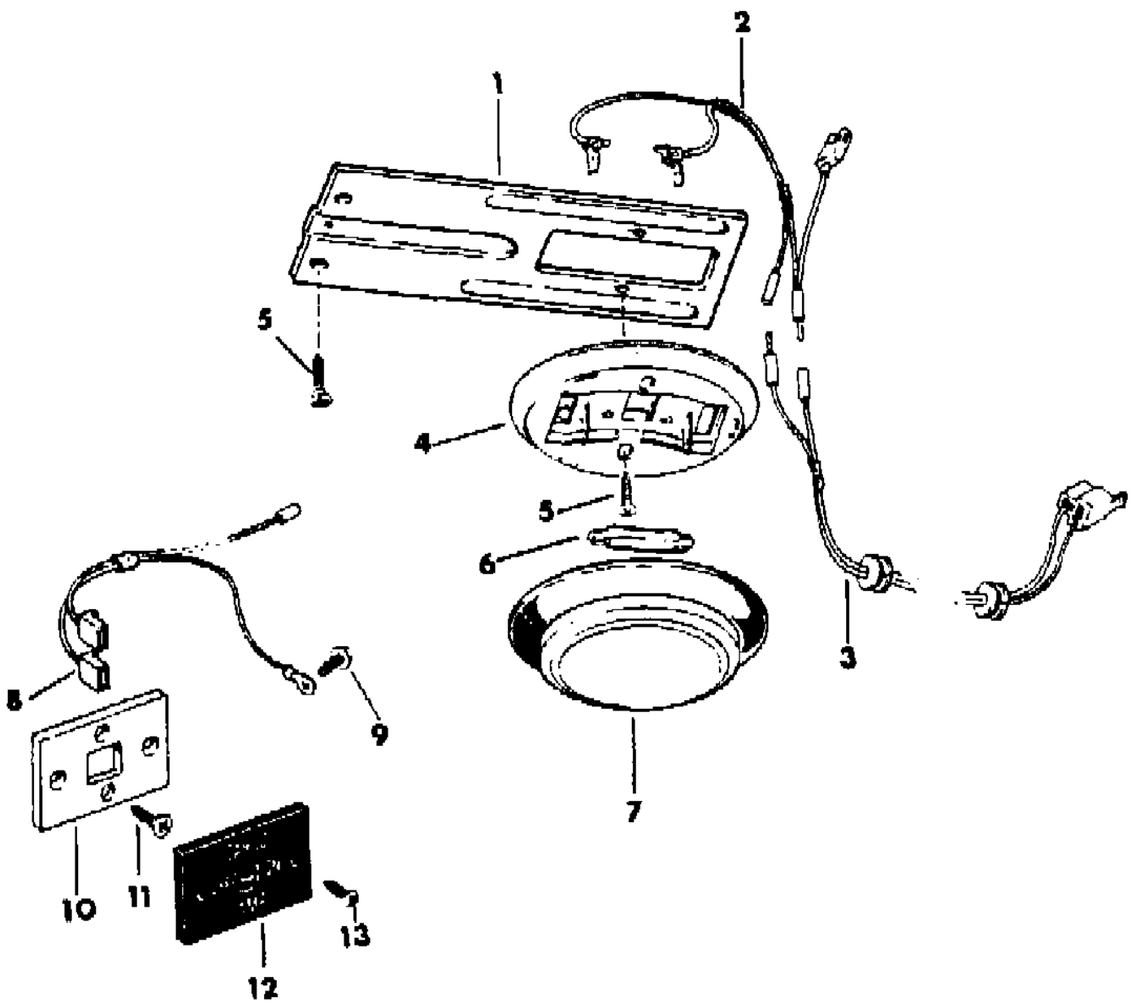

ITEM	PART NUMBER	QTY	BODY	MODEL	DESCRIPTION
1	J805 2259	1			PLATE
2					WIRING, Dome Lamp
	J805 3212	1			Front
	J805 3213	1			Rear
3	J805 3211	1			HOUSING
4	J575 1234	1			HOUSING
5	J448 9487	AR			SCREW
6	J400 3086	1			BULB, "561"
7	J368 9643	1			LENS
8	J805 3214	1			WIRING
9	J942 6241	1			SCREW
10	J805 2466	1			BRACKET
11	J942 6506	4			SCREW
12	J545 1489	1			SWITCH
13	J941 4712	2			SCREW

MODEL CODES
16=Cherokee 2 Dr.(1981-83)
17=Cherokee 2 Dr.(1981-83)
73=Cherokee 2WD-2 Dr.(1984-86)
74=Cherokee 2WD-4 Dr.(1984-86)
18=Cherokee 4 Dr.(1981-83)
77=Cherokee 4WD-2 Dr.(1984-86)
78=Cherokee 4WD-4 Dr.(1984-86)
85=CJ-5 (1981-83)
86=CJ-6(1981)
87=CJ-7(1981-86)
88=CJ-8, Scrambler(1981-86)
64=Comanche 2WD-6 Ft. Box(1986)
66=Comanche 2WD-7 Ft. Box(1986)
63=Comanche 4WD-6 Ft. Box(1986)
65=Comanche 4WD-7 Ft. Box(1986)
15=Grand Wagoneer 4 Dr.(1984-86)
25=J-10 Truck 7 Ft. Box(1981-84)
26=J10 Truck 8 Ft. Box(1981-86)
27=J-20 Truck 8 Ft. Box(1981-86)
15=Wagoneer 4 Dr.(1981-83)
75=Wagoneer 4WD-4 Dr.(1984-86)

BODY
CJ=CJ-5, CJ-6, CJ-7, CJ-8, Scrambler(1981-86)
MJ=Comanche Pickup(1986)

STYLES
SJ=Wagoneer(1981-83), Grand Wagoneer(1984-86), Cherokee(1981-83), J-10, J-20(1981-86)
XJ=Wagoneer(1984-86), Cherokee(1984-86)

AR = Use as Required - = Non Illustrated Part P.A.R. = Paint as Required

« RETURN TO GROUP INDEX

LAMP--INTERIOR AND UNDERHOOD XJ CHEROKEE, XJ WAGONEER, COMANCHE
Figure 8-8900

81J08 8900

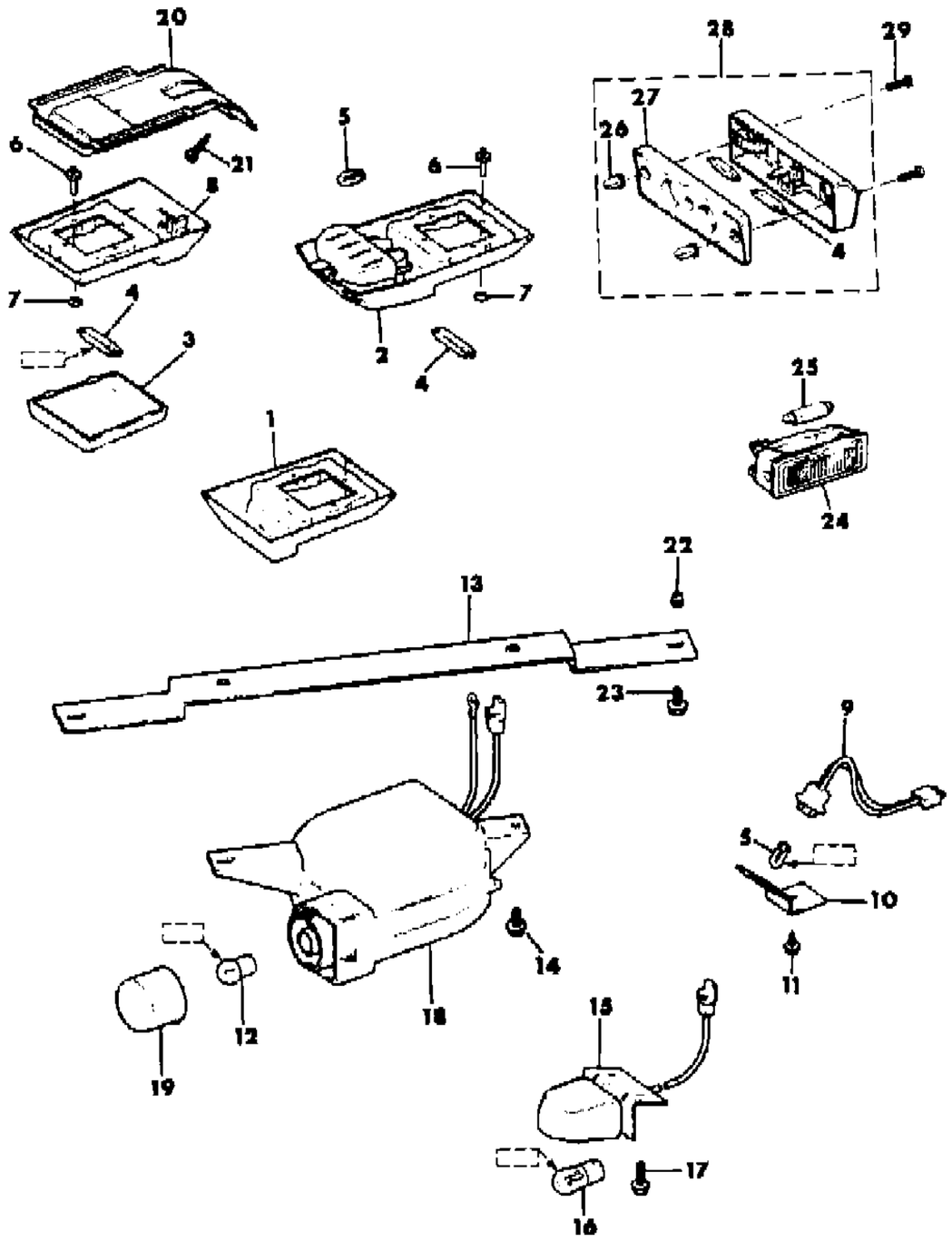

ITEM	PART NUMBER	QTY	BODY	MODEL	DESCRIPTION
1	5600 1224	1	XJ		LAMP, Dome P.A.R.
2	5600 1225	1	XJ		LAMP, Dome/Reading P.A.R.
3	5600 0191	1	XJ		LENS, Dome Lamp
4	J400 3086	1	XJ		BULB, "561"
5	J943 6750	1	XJ		BULB, "906"
6	3420 1533	2	XJ		STUD
7	J400 0459	2	XJ		NUT
8	5600 1226	1	XJ		LAMP, Cargo
9	5600 0678	2			LAMP, Courtesy
10	5500 2905	2			BRACKET
11	1150 2843	2			SCREW
12	J014 2453	1			BULB, "90"
13	5600 0719	1			BRACKET
14	1150 2453	2			SCREW
15	J324 0729	1			LAMP, Underhood
16	J812 5442	1			BULB, "105"
17	3420 1691	2			SCREW
18	5600 0718	1			LAMP, Underhood
19	8350 0907	1			LENS
20	5500 2812	1	XJ		BRACKET
21	1150 1011	2	XJ		SCREW
22	3420 1595	2			NUT
23	1150 2453	2			BOLT
24	T134 9760	2	MJ		LAMP, Dome
25	T309 7183	2	MJ		BULB, "C11-7W"
26	3420 1977	2	MJ		NUT
27	5600 1240	1	MJ		GASKET
28	5600 0846	1	MJ		LAMP, Cargo Box
29	S150 2900	2	MJ		SCREW

MODEL CODES

16=Cherokee 2 Dr.(1981-83)
17=Cherokee 2 Dr.(1981-83)
73=Cherokee 2WD-2 Dr.(1984-86)
74=Cherokee 2WD-4 Dr.(1984-86)
18=Cherokee 4 Dr.(1981-83)
77=Cherokee 4WD-2 Dr.(1984-86)
78=Cherokee 4WD-4 Dr.(1984-86)
85=CJ-5 (1981-83)
86=CJ-6(1981)
87=CJ-7(1981-86)
88=CJ-8, Scrambler(1981-86)
64=Comanche 2WD-6 Ft. Box(1986)
66=Comanche 2WD-7 Ft. Box(1986)
63=Comanche 4WD-6 Ft. Box(1986)
65=Comanche 4WD-7 Ft. Box(1986)
15=Grand Wagoneer 4 Dr.(1984-86)
25=J-10 Truck 7 Ft. Box(1981-84)
26=J10 Truck 8 Ft. Box(1981-86)
27=J-20 Truck 8 Ft. Box(1981-86)
15=Wagoneer 4 Dr.(1981-83)
75=Wagoneer 4WD-4 Dr.(1984-86)

BODY
CJ=CJ-5, CJ-6, CJ-7, CJ-8, Scrambler(1981-86)
MJ=Comanche Pickup(1986)

STYLES
SJ=Wagoneer(1981-83), Grand Wagoneer(1984-86), Cherokee(1981-83), J-10, J-20(1981-86)
XJ=Wagoneer(1984-86), Cherokee(1984-86)

AR = Use as Required - = Non Illustrated Part P.A.R. = Paint as Required

« RETURN TO GROUP INDEX

LAMP--INTERIOR AND UNDERHOOD SJ CHEROKEE, SJ WAGONEER, J10, J20
Figure 8-9000

81J08 9000

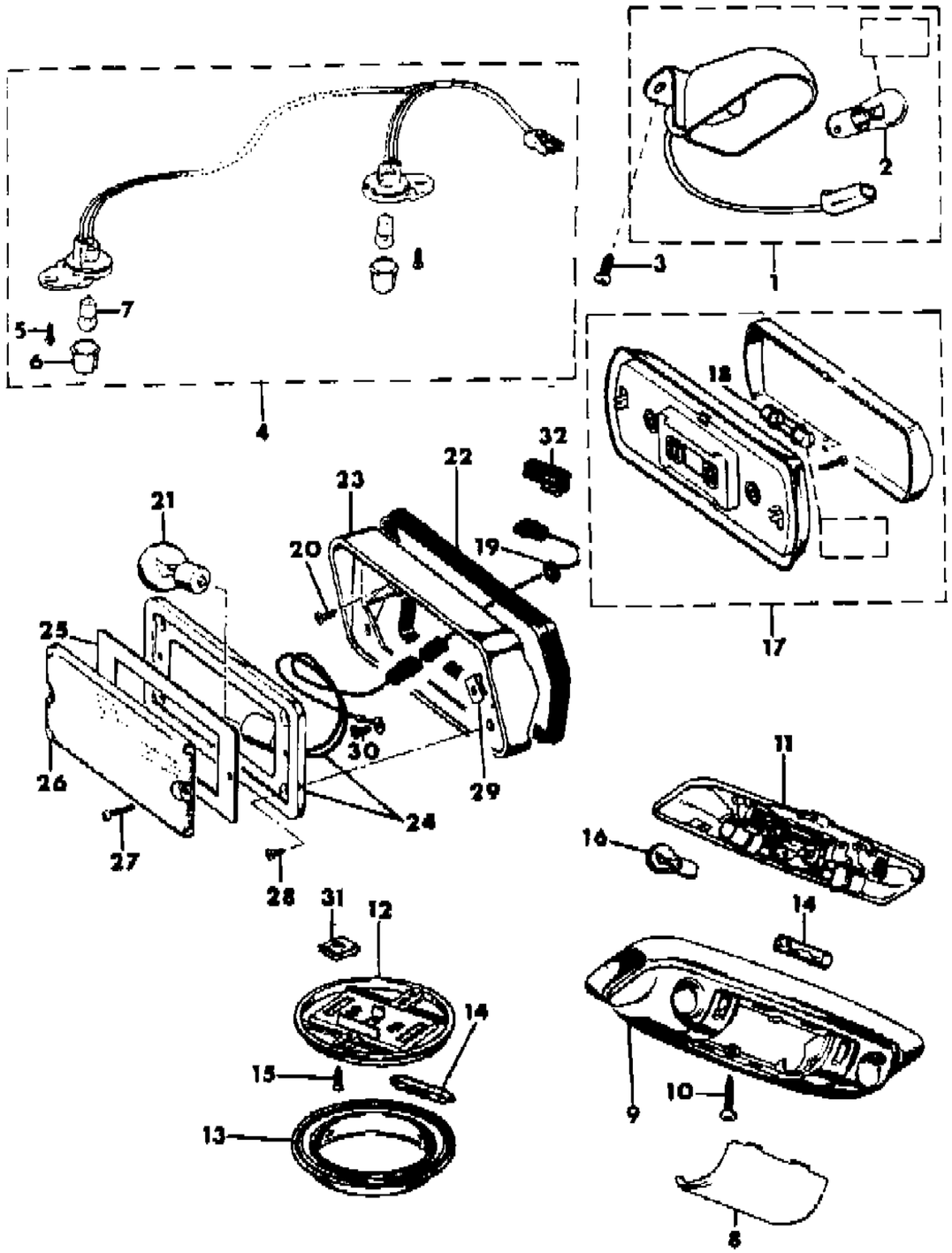

ITEM	PART NUMBER	QTY	BODY	MODEL	DESCRIPTION
1	J324 0729	1			LAMP, Underhood
2	J812 5442	1			BULB, "105"
3	J942 1073	2			SCREW
4	J575 7079	1			LAMP, Courtesy
5	J941 7282	2			SCREW
6	J545 0116	2			LENS
7	J014 2452	2			BULB, "89"
8	J323 4114	1		15,16,1	LENS
9	J323 6152	1		15,16,1	HOUSING
10	J942 2397	2		15,16,1	SCREW
11	J323 6151	1		15,16,1	BASE
12	J575 1234	2		15,16,1	BASE
13	J368 9643	2		15,16,1	LENS
14	J400 3086	1		15,16,1	BULB, "561"
15	J812 0056	2		15,16,1	SCREW
16	S045 5136	1		15,16,1	BULB, "1004"
17	J095 6436	1		25,26,2	LAMP, Dome
18	J096 0531	1		25,26,2	BULB, "212"
19	J093 3348	1		25,26,2	GROMMET
20	J941 4721	2		25,26,2	SCREW
21	J320 9543	1		25,26,2	BULB, "1156"
22	J545 1488	1		25,26,2	SEAL
23	J545 1487	1		25,26,2	BEZEL
24	J545 2057	1		25,26,2	BASE
25	J545 2305	1		25,26,2	GASKET
26	J545 2306	1		25,26,2	LENS
27	J016 4401	2		25,26,2	SCREW
28	J448 8697	4		25,26,2	SCREW
29	J400 3841	2		25,26,2	NUT
30	J941 4721	4		25,26,2	SCREW
31	J096 1852	2		15,16,1	NUT
32	J575 0947	1		25,26,2	CONNECTOR

MODEL CODES
16=Cherokee 2 Dr.(1981-83)
17=Cherokee 2 Dr.(1981-83)
73=Cherokee 2WD-2 Dr.(1984-86)
74=Cherokee 2WD-4 Dr.(1984-86)
18=Cherokee 4 Dr.(1981-83)
77=Cherokee 4WD-2 Dr.(1984-86)
78=Cherokee 4WD-4 Dr.(1984-86)
85=CJ-5 (1981-83)
86=CJ-6(1981)
87=CJ-7(1981-86)
88=CJ-8, Scrambler(1981-86)
64=Comanche 2WD-6 Ft. Box(1986)
66=Comanche 2WD-7 Ft. Box(1986)
63=Comanche 4WD-6 Ft. Box(1986)
65=Comanche 4WD-7 Ft. Box(1986)
15=Grand Wagoneer 4 Dr.(1984-86)
25=J-10 Truck 7 Ft. Box(1981-84)
26=J10 Truck 8 Ft. Box(1981-86)
27=J-20 Truck 8 Ft. Box(1981-86)
15=Wagoneer 4 Dr.(1981-83)
75=Wagoneer 4WD-4 Dr.(1984-86)

BODY
CJ=CJ-5, CJ-6, CJ-7, CJ-8, Scrambler(1981-86)
MJ=Comanche Pickup(1986)

STYLES
SJ=Wagoneer(1981-83), Grand Wagoneer(1984-86), Cherokee(1981-83), J-10, J-20(1981-86)
XJ=Wagoneer(1984-86), Cherokee(1984-86)

AR = Use as Required - = Non Illustrated Part P.A.R. = Paint as Required

« RETURN TO GROUP INDEX

POWER SUPPLY 24 VOLT, EXPORT CJ-5,6,7,8 SCRAMBLER
Figure 8-9100

81J08 9100

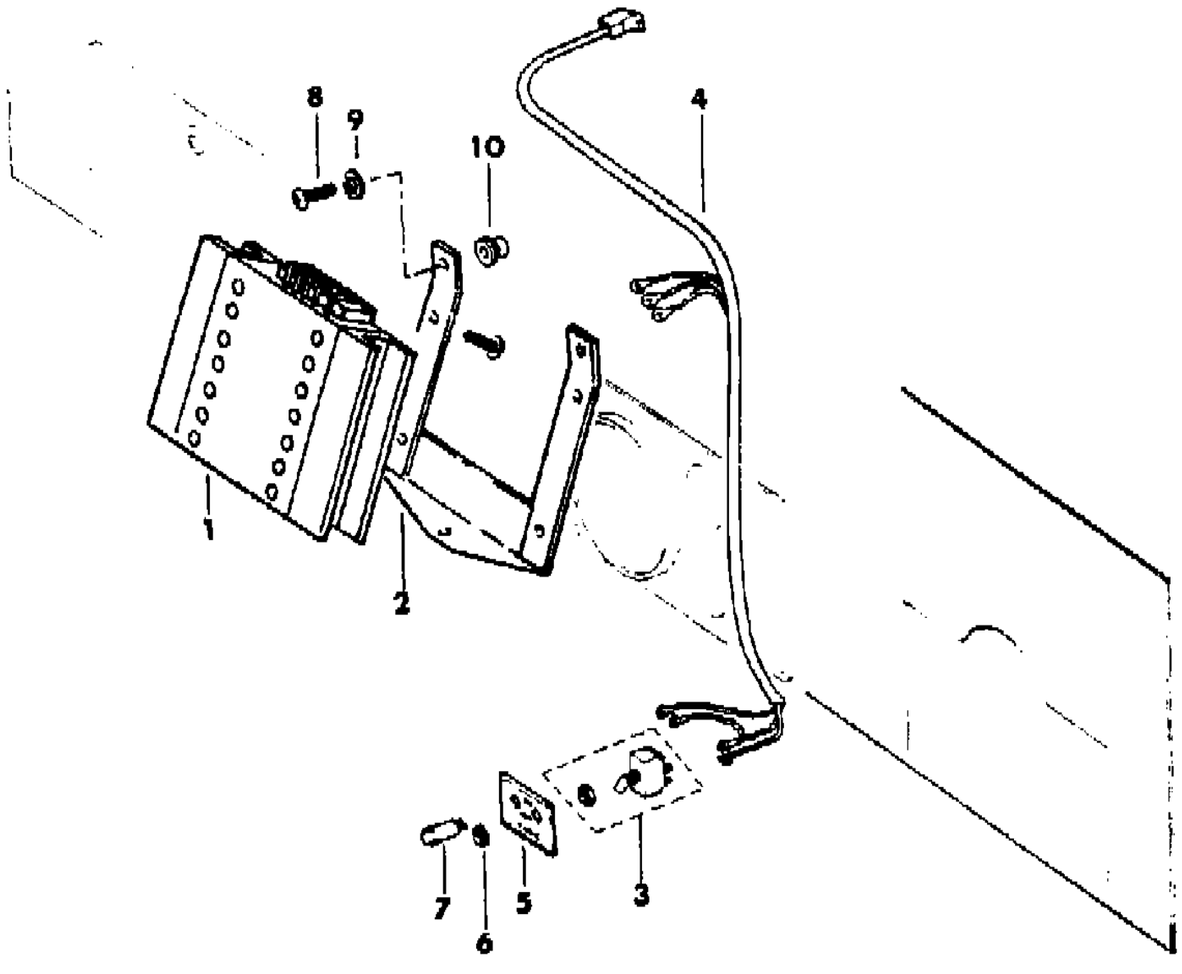

ITEM	PART NUMBER	QTY	BODY	MODEL	DESCRIPTION
1	J805 1281	1			INVERTER
2	J805 1458	1			BRACKET
3	J599 2314	1			SWITCH
4	J805 3124	1			WIRING
5	J805 1280	1			NAMEPLATE ***
6	J365 7913	1			NUT
7	J599 2312	1			LAMP
8	J400 4167	3			SCREW
9	J017 8378	3			WASHER
10	J400 5237	3			NUT, Well

MODEL CODES

16=Cherokee 2 Dr.(1981-83)
17=Cherokee 2 Dr.(1981-83)
73=Cherokee 2WD-2 Dr.(1984-86)
74=Cherokee 2WD-4 Dr.(1984-86)
18=Cherokee 4 Dr.(1981-83)
77=Cherokee 4WD-2 Dr.(1984-86)
78=Cherokee 4WD-4 Dr.(1984-86)
85=CJ-5 (1981-83)
86=CJ-6(1981)
87=CJ-7(1981-86)
88=CJ-8, Scrambler(1981-86)
64=Comanche 2WD-6 Ft. Box(1986)
66=Comanche 2WD-7 Ft. Box(1986)
63=Comanche 4WD-6 Ft. Box(1986)
65=Comanche 4WD-7 Ft. Box(1986)
15=Grand Wagoneer 4 Dr.(1984-86)
25=J-10 Truck 7 Ft. Box(1981-84)
26=J10 Truck 8 Ft. Box(1981-86)
27=J-20 Truck 8 Ft. Box(1981-86)
15=Wagoneer 4 Dr.(1981-83)
75=Wagoneer 4WD-4 Dr.(1984-86)

BODY
CJ=CJ-5, CJ-6, CJ-7, CJ-8, Scrambler(1981-86)
MJ=Comanche Pickup(1986)

STYLES
SJ=Wagoneer(1981-83), Grand Wagoneer(1984-86), Cherokee(1981-83), J-10, J-20(1981-86)
XJ=Wagoneer(1984-86), Cherokee(1984-86)

AR = Use as Required - = Non Illustrated Part P.A.R. = Paint as Required

« RETURN TO GROUP INDEX

WIRING--ENGINE AND BODY CJ-5,6,7,8 SCRAMBLER
Figure 8-9200

81J08 9200

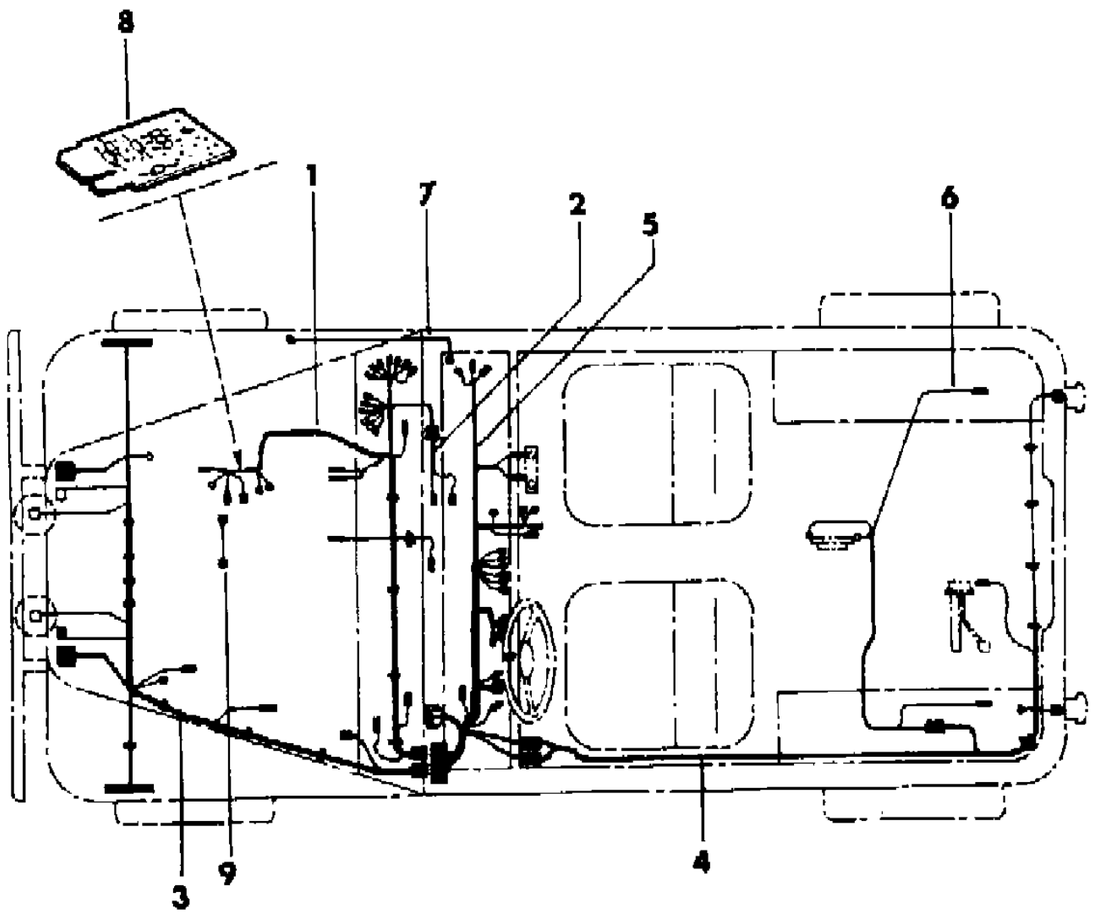

ITEM	PART NUMBER	QTY	BODY	MODEL	DESCRIPTION
1					WIRING, Engine Compartment
					FOUR Cylinder
	J575 8597	1			1981: Man. Trans.
	J575 7084	1			1981: Auto. Trans.
	J576 1212	1			1982
	J576 2688	1			1983: GM
	J576 4180	1			1983-86: AMC
	J575 8598	1			1981:EXPORT, Right Hand Drive
	J576 4774	1			1984-86:Non-Registered Market, Left Hand Drive
	J576 4250	1			1984-86:Non-Registered Market, Right Hand Drive
	J575 7086	1			Diesel, Left Hand Drive
	J575 7087	1			Diesel, Right Hand Drive
					SIX Cylinder
					1981
	J575 7082	1			49 State
	J575 8732	1			Calif.
					1982
	J576 1216	1			49 State
	J576 1211	1			Calif.
	J576 2678	1			1983-86
	J575 8582	1			1981-82:EXPORT, Left Hand Drive
	J575 8583	1			1981:EXPORT, Right Hand Drive
	J576 1215	1			1982-83:EXPORT, Right Hand Drive
	J576 1211	1			1982: Japan
	J576 2678	1			1983-86: Japan
	J576 2692	1			1983-86:Economic Commission of Europe, Australian Design Rule, Non Registered Markets
2					WIRING, Transmission
					GM Four Cylinder
	J576 4203	1			Man. Trans.
	J575 8252	1			Auto. Tran.
					AMC Four Cylinder
	J575 2274	1			Tremec Four Speed Man. Trans.
	J575 1748	1			Warner Four Speed Man. Trans.
	J575 2274	1			Five Speed Man. Trans.
	J575 8252	1			Auto. Trans.
					Six Cylinder
	J575 2274	1			Tremec Four Speed Man. Trans.
	J575 1748	1			Warner Four Speed Man. Trans.

MODEL CODES

16=Cherokee 2 Dr.(1981-83)	78=Cherokee 4WD-4 Dr.(1984-86)	64=Comanche 2WD-6 Ft. Box(1986)	25=J-10 Truck 7 Ft. Box(1981-84)
17=Cherokee 2 Dr.(1981-83)	85=CJ-5 (1981-83)	66=Comanche 2WD-7 Ft. Box(1986)	26=J10 Truck 8 Ft. Box(1981-86)
73=Cherokee 2WD-2 Dr.(1984-86)	86=CJ-6(1981)	63=Comanche 4WD-6 Ft. Box(1986)	27=J-20 Truck 8 Ft. Box(1981-86)
74=Cherokee 2WD-4 Dr.(1984-86)	87=CJ-7(1981-86)	65=Comanche 4WD-7 Ft. Box(1986)	15=Wagoneer 4 Dr.(1981-83)
18=Cherokee 4 Dr.(1981-83)	88=CJ-8, Scrambler(1981-86)	15=Grand Wagoneer 4 Dr.(1984-86)	75=Wagoneer 4WD-4 Dr.(1984-86)
77=Cherokee 4WD-2 Dr.(1984-86)			

BODY
CJ=CJ-5, CJ-6, CJ-7, CJ-8, Scrambler(1981-86)
MJ=Comanche Pickup(1986)

STYLES
SJ=Wagoneer(1981-83), Grand Wagoneer(1984-86), Cherokee(1981-83), J-10, J-20(1981-86)
XJ=Wagoneer(1984-86), Cherokee(1984-86)

AR = Use as Required - = Non Illustrated Part P.A.R. = Paint as Required

WIRING--ENGINE AND BODY CJ-5,6,7,8 SCRAMBLER
Figure 8-9200

81J08 9200

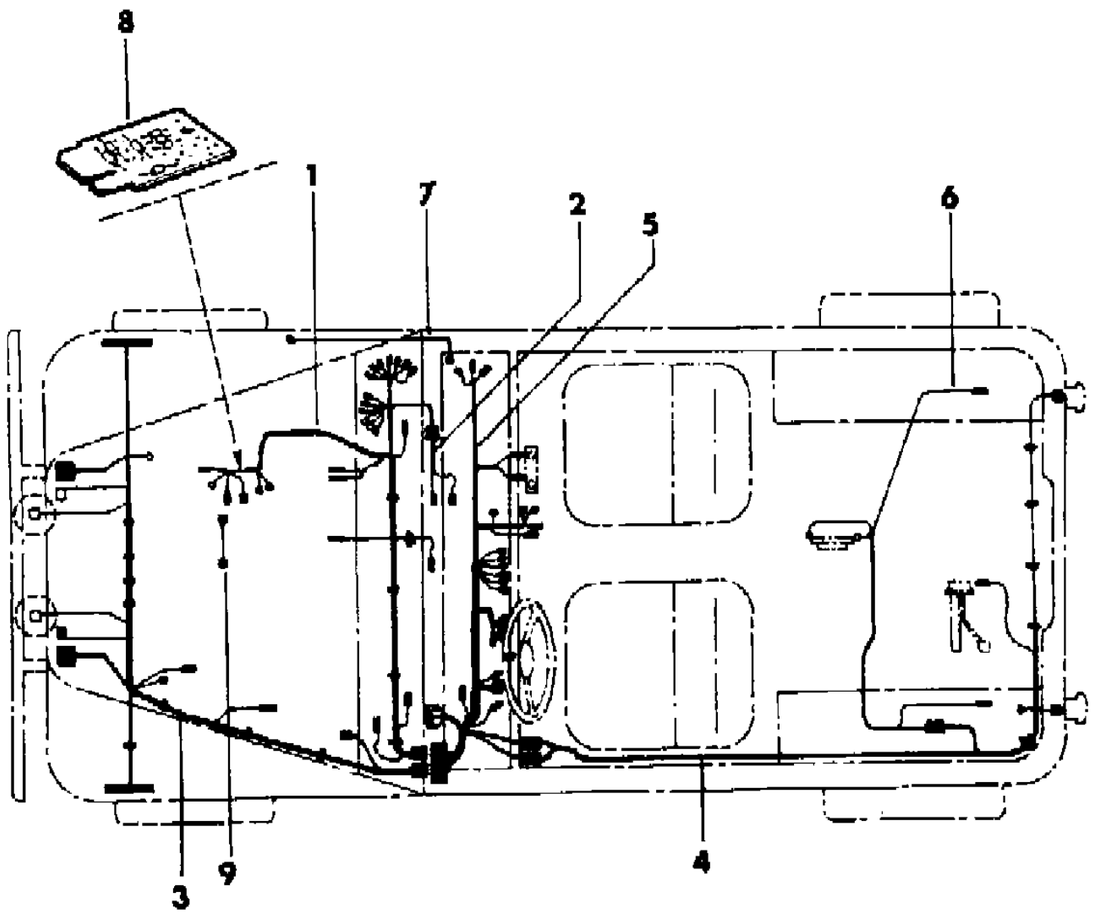

ITEM	PART NUMBER	QTY	BODY	MODEL	DESCRIPTION
	J575 2274	1			Five Speed Man. Trans.
	J575 8582	1			Auto. Trans.
3					WIRING, Front End Lighting
					1981
	J575 7461	1			w/Fog Lamps
	J575 8137	1			w/o Fog Lamps
	J576 1360	1			1982-86
					1981-86:Economic Commission of EUROPE, Australian Design Rule
	J575 8220	1			Left Hand Drive
					Right Hand Drive
	J575 8828	1			Four Cylinder
	J575 8827	1			Six Cylinder
					1981:Non-Registered Markets, Right Hand Drive
	J575 8292	1			Four Cylinder
	J575 7462	1			Six Cylinder
					1982-86:Non-Registered Markets, Right Hand Drive
	J576 1363	1			Four Cylinder
	J576 1361	1			Six Cylinder
	J576 3575	1			1982-86:Japan
	J805 3000	1			1981-86:EXPORT, Severe Use
4					WIRING, Body
	J575 8105	1	85		1981-83
	J575 8106	1	86,87		1981-86
	J575 7457	1	88		1981-86
					Economic Commission of EUROPE, Australian Design Rule
	J575 8830	1	87		1981
	J575 8829	1	88		1981
	J576 1355	1	87		1982-83
	J576 1356	1	88		1982-83
	J576 4217	1	87		1984-86
	J576 4218	1	88		1984-86
					Japan
	J576 2520	1	87		1982-83
	J576 4217	1	87		1984-86
	J576 4218	1	88		1984-86
					EXPORT, Severe Use
	J805 3009	1	87		
	J805 3015	1	88		

MODEL CODES

16=Cherokee 2 Dr.(1981-83)
17=Cherokee 2 Dr.(1981-83)
73=Cherokee 2WD-2 Dr.(1984-86)
74=Cherokee 2WD-4 Dr.(1984-86)
18=Cherokee 4 Dr.(1981-83)
77=Cherokee 4WD-2 Dr.(1984-86)
78=Cherokee 4WD-4 Dr.(1984-86)
85=CJ-5 (1981-83)
86=CJ-6(1981)
87=CJ-7(1981-86)
88=CJ-8, Scrambler(1981-86)
64=Comanche 2WD-6 Ft. Box(1986)
66=Comanche 2WD-7 Ft. Box(1986)
63=Comanche 4WD-6 Ft. Box(1986)
65=Comanche 4WD-7 Ft. Box(1986)
15=Grand Wagoneer 4 Dr.(1984-86)
25=J-10 Truck 7 Ft. Box(1981-84)
26=J10 Truck 8 Ft. Box(1981-86)
27=J-20 Truck 8 Ft. Box(1981-86)
15=Wagoneer 4 Dr.(1981-83)
75=Wagoneer 4WD-4 Dr.(1984-86)

BODY
CJ=CJ-5, CJ-6, CJ-7, CJ-8, Scrambler(1981-86)
MJ=Comanche Pickup(1986)

STYLES
SJ=Wagoneer(1981-83), Grand Wagoneer(1984-86), Cherokee(1981-83), J-10, J-20(1981-86)
XJ=Wagoneer(1984-86), Cherokee(1984-86)

AR = Use as Required - = Non Illustrated Part P.A.R. = Paint as Required

WIRING--ENGINE AND BODY CJ-5,6,7,8 SCRAMBLER
Figure 8-9200

81J08 9200

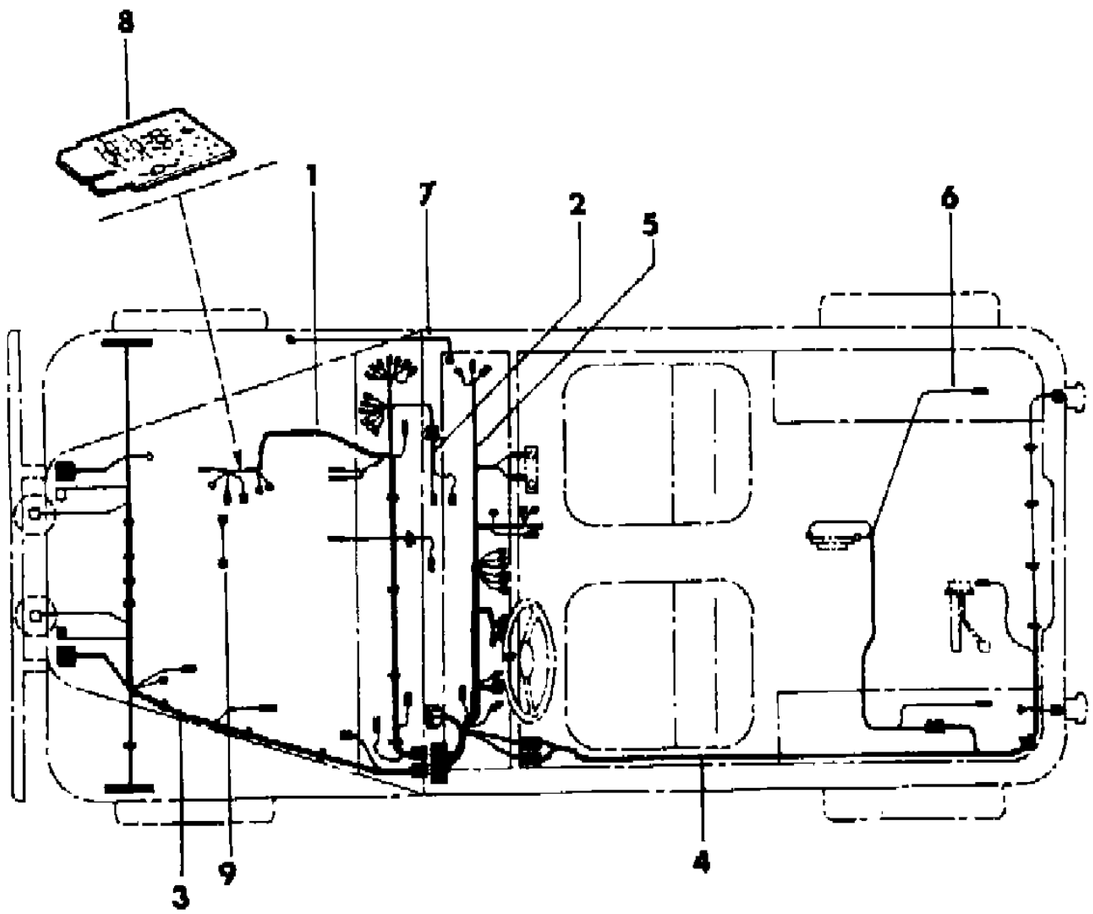

ITEM	PART NUMBER	QTY	BODY	MODEL	DESCRIPTION
5					WIRING, Instr. Panel
					1981
	J575 8872	1			w/Fog Lamps
	J575 7087	1			w/o Fog lamps
	J576 2606	1			1982
	J576 3685	1			1983-86
					Economic Commission of EUROPE, Australian Design Rule, Right Hand Drive
	J575 8826	1			1981-82
	J576 2549	1			1983-85
					Economic Commission of EUROPE, Left Hand Drive
	J576 3701	1			1983-85
					Australian Design Rule, Left Hand Drive
	J576 1210	1			1982-85
					Non-Registered Markets, Right Hand Drive
	J575 7079	1			1981-82
	J576 2548	1			1983-85
					Japan
	J576 2571	1			1982
	J576 3700	1			1983-85
					Economic Commission of Europe, Left Hand Drive, Diesel
	J575 8776	1			1981
	J576 4639	1			1982-85
					Non-Registered Markets, Left Hand Drive, Diesel
	J575 8844	1			1982-83
					Economic Commission of Europe, Australian Design Rule, Right Hand Drive, Diesel
	J575 8825	1			1981
	J575 8826	1			1982-85
					Non-Registered Markets, Right Hand Drive, Diesel
	J575 7080	1			1981-85
	J805 3064	1			1982-85 Severe Use
	5603 2503	1			1986 EXPORT
6		1			WIRING, Dome Lamp
	J575 2053				Upper
	J813 3653				Lower
7	J094 3089	1			CABLE, Starter
8	J324 0744	1			DIODE, Six Cylinder
9	J575 8282	1			WIRING, Alternator, Six Cylinder

MODEL CODES

16=Cherokee 2 Dr.(1981-83)	78=Cherokee 4WD-4 Dr.(1984-86)	64=Comanche 2WD-6 Ft. Box(1986)	25=J-10 Truck 7 Ft. Box(1981-84)
17=Cherokee 2 Dr.(1981-83)	85=CJ-5 (1981-83)	66=Comanche 2WD-7 Ft. Box(1986)	26=J10 Truck 8 Ft. Box(1981-86)
73=Cherokee 2WD-2 Dr.(1984-86)	86=CJ-6(1981)	63=Comanche 4WD-6 Ft. Box(1986)	27=J-20 Truck 8 Ft. Box(1981-86)
74=Cherokee 2WD-4 Dr.(1984-86)	87=CJ-7(1981-86)	65=Comanche 4WD-7 Ft. Box(1986)	15=Wagoneer 4 Dr.(1981-83)
18=Cherokee 4 Dr.(1981-83)	88=CJ-8, Scrambler(1981-86)	15=Grand Wagoneer 4 Dr.(1984-86)	75=Wagoneer 4WD-4 Dr.(1984-86)
77=Cherokee 4WD-2 Dr.(1984-86)			

BODY
CJ=CJ-5, CJ-6, CJ-7, CJ-8, Scrambler(1981-86)
MJ=Comanche Pickup(1986)

STYLES
SJ=Wagoneer(1981-83), Grand Wagoneer(1984-86), Cherokee(1981-83), J-10, J-20(1981-86)
XJ=Wagoneer(1984-86), Cherokee(1984-86)

AR = Use as Required - = Non Illustrated Part P.A.R. = Paint as Required

WIRING--ENGINE AND BODY CJ-5,6,7,8 SCRAMBLER
Figure 8-9200

81J08 9200

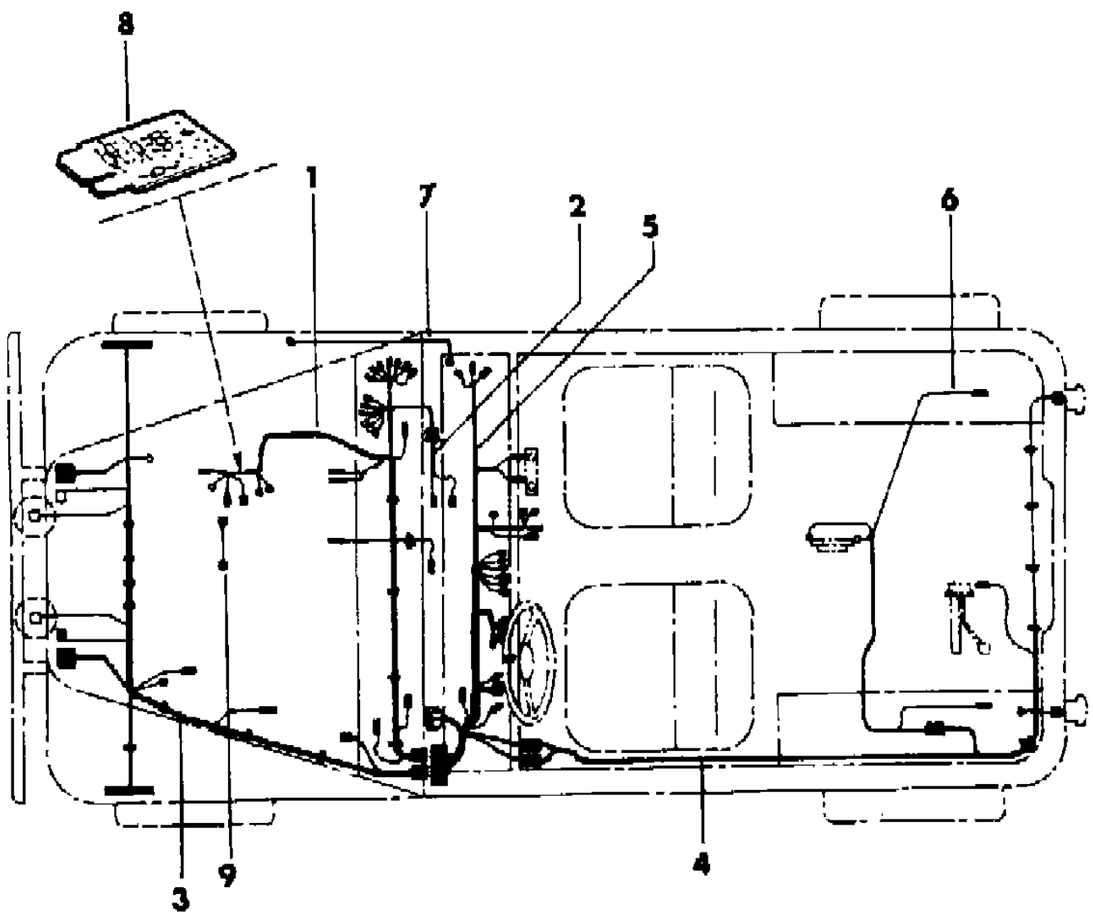

ITEM	PART NUMBER	QTY	BODY	MODEL	DESCRIPTION
-					WIRING, Emission Control
	J575 7089				81---80-Four-Calif.
	J576 1208				82---FOUR (Calif.)
	J324 0748				82/83---(Six-Japan)
	J576 3682				83/---(Four-GM-Calif.)
	J576 4088				83/---80 (Four-GM-Exc. Calif.)
	J576 4179				83/---80 (FOUR-AMC)
	J576 2679				83---SIX
	J576 2679				83---80 (Six-Japan)
	J576 4233				84/---SIX
	J576 4233				84/SIX (Japan)
	J576 4788				84/ 87-88 (Four)

MODEL CODES

16=Cherokee 2 Dr.(1981-83)
17=Cherokee 2 Dr.(1981-83)
73=Cherokee 2WD-2 Dr.(1984-86)
74=Cherokee 2WD-4 Dr.(1984-86)
18=Cherokee 4 Dr.(1981-83)
77=Cherokee 4WD-2 Dr.(1984-86)
78=Cherokee 4WD-4 Dr.(1984-86)
85=CJ-5 (1981-83)
86=CJ-6(1981)
87=CJ-7(1981-86)
88=CJ-8, Scrambler(1981-86)
64=Comanche 2WD-6 Ft. Box(1986)
66=Comanche 2WD-7 Ft. Box(1986)
63=Comanche 4WD-6 Ft. Box(1986)
65=Comanche 4WD-7 Ft. Box(1986)
15=Grand Wagoneer 4 Dr.(1984-86)
25=J-10 Truck 7 Ft. Box(1981-84)
26=J10 Truck 8 Ft. Box(1981-86)
27=J-20 Truck 8 Ft. Box(1981-86)
15=Wagoneer 4 Dr.(1981-83)
75=Wagoneer 4WD-4 Dr.(1984-86)

BODY
CJ=CJ-5, CJ-6, CJ-7, CJ-8, Scrambler(1981-86)
MJ=Comanche Pickup(1986)

STYLES
SJ=Wagoneer(1981-83), Grand Wagoneer(1984-86), Cherokee(1981-83), J-10, J-20(1981-86)
XJ=Wagoneer(1984-86), Cherokee(1984-86)

AR = Use as Required - = Non Illustrated Part P.A.R. = Paint as Required

WIRING--COMPARTMENT XJ CHEROKEE, XJ WAGONEER 1984
Figure 8-9300

81J08 9300

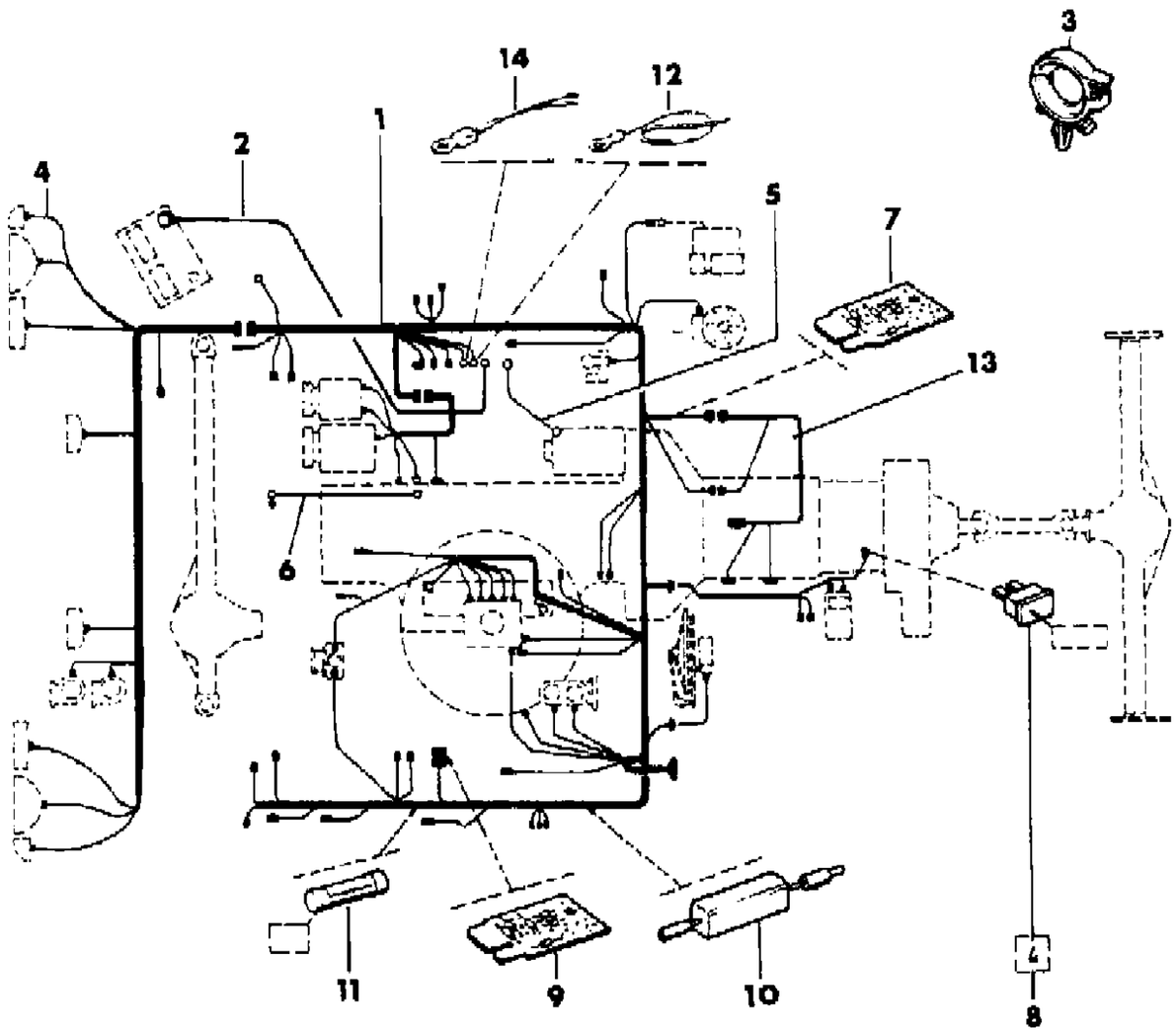

ITEM	PART NUMBER	QTY	BODY	MODEL	DESCRIPTION
1					WIRING, Engine
	5600 1148	1			Four Cylinder
					Six Cylinder
	5600 1199	1			49 State, Canada
	5600 1668	1			California
2					WIRING, Alternator
	5600 1126	1			Four Cylinder
	5600 0760	1			Six Cylinder
	5600 1370	1			Diesel
3	J417 5403	AR			CLIP
4	5600 0737	1			WIRING, Front Lights
5	5600 0301	1			WIRING, Starter
6					WIRING, Ground
	5600 0761	1			Four Cylinder
	J324 0726	1			Six Cylinder
7	3300 1376	1			DIODE, Emission Lamp, California
8	J323 1212	1			FUSE, 4 AMP
9	J324 0744	1			DIODE, Idle, Four Cylinder
10	3600 0597	1			DIODE, Idle, Six Cylinder
11					FUSE
	8350 100	1			1 AMP
	3600 1416	1			2 AMP
12	J813 3785	1			FUSIBLE LINK
13					WIRING, Transmission
	5600 1174	1			Four Speed Man. Trans., 8953001547 or8953002269
	5600 1178	1			Four Speed Man. Trans. 8953001565 or895300264
	5600 1173	1			Five Speed Man. Trans. 8953001551 or8953002270
	5600 1179	1			Five Speed Man. Trans. 8953001566 or8953002265
14	J813 4201	2			FUSIBLE LINK

MODEL CODES
16=Cherokee 2 Dr.(1981-83)
17=Cherokee 2 Dr.(1981-83)
73=Cherokee 2WD-2 Dr.(1984-86)
74=Cherokee 2WD-4 Dr.(1984-86)
18=Cherokee 4 Dr.(1981-83)
77=Cherokee 4WD-2 Dr.(1984-86)
78=Cherokee 4WD-4 Dr.(1984-86)
85=CJ-5 (1981-83)
86=CJ-6(1981)
87=CJ-7(1981-86)
88=CJ-8, Scrambler(1981-86)
64=Comanche 2WD-6 Ft. Box(1986)
66=Comanche 2WD-7 Ft. Box(1986)
63=Comanche 4WD-6 Ft. Box(1986)
65=Comanche 4WD-7 Ft. Box(1986)
15=Grand Wagoneer 4 Dr.(1984-86)
25=J-10 Truck 7 Ft. Box(1981-84)
26=J10 Truck 8 Ft. Box(1981-86)
27=J-20 Truck 8 Ft. Box(1981-86)
15=Wagoneer 4 Dr.(1981-83)
75=Wagoneer 4WD-4 Dr.(1984-86)

BODY
CJ=CJ-5, CJ-6, CJ-7, CJ-8, Scrambler(1981-86)
MJ=Comanche Pickup(1986)

STYLES
SJ=Wagoneer(1981-83), Grand Wagoneer(1984-86), Cherokee(1981-83), J-10, J-20(1981-86)
XJ=Wagoneer(1984-86), Cherokee(1984-86)

AR = Use as Required - = Non Illustrated Part P.A.R. = Paint as Required

« RETURN TO GROUP INDEX

WIRING--ENGINE COMPARTMENT XJ CHEROKEE, XJ WAGONEER 1985
Figure 8-9400

81J08 9400

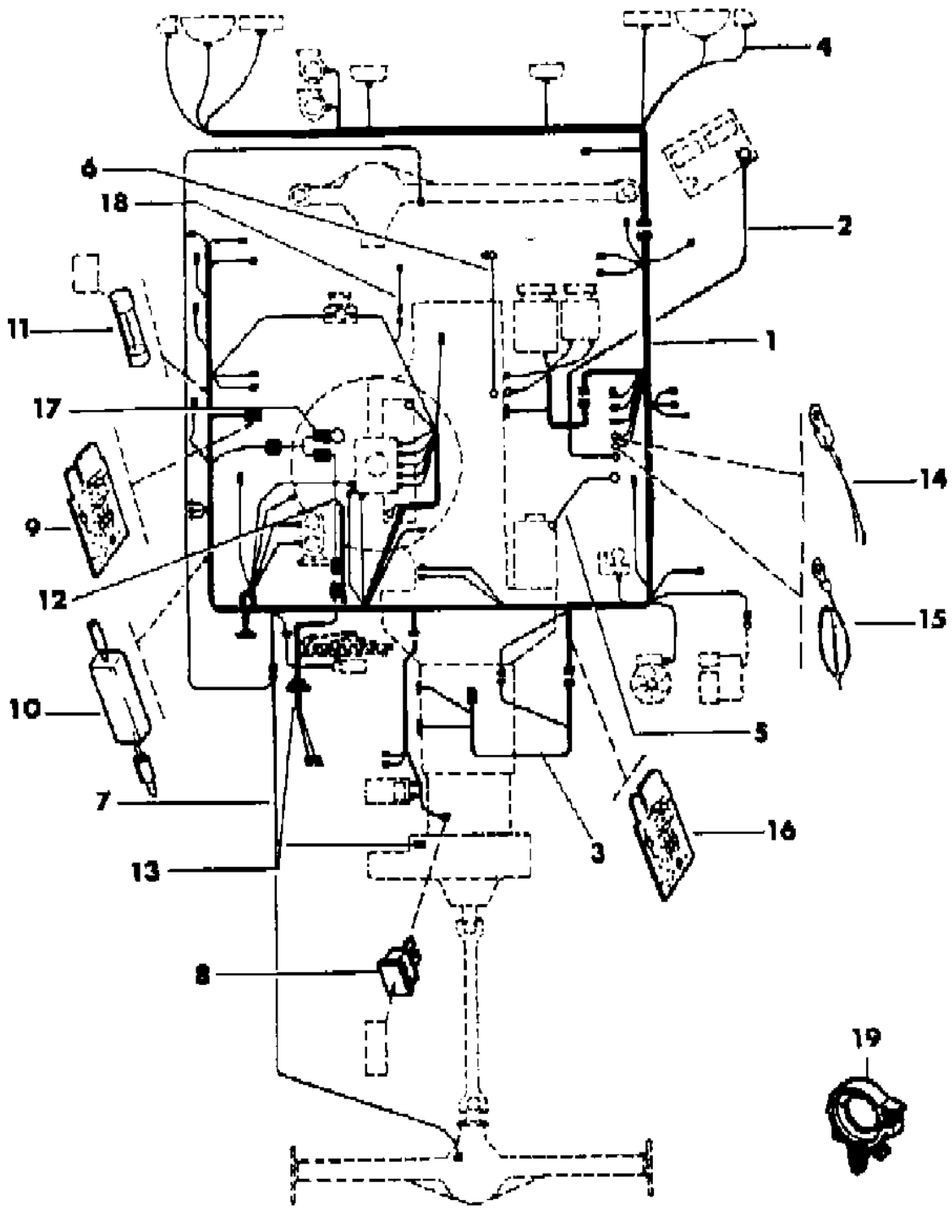

ITEM	PART NUMBER	QTY	BODY	MODEL	DESCRIPTION
1					WIRING, Engine
					Four Cylinder
	5600 1536	1			w/System Sentry
					w/o System Sentry
	5600 1537	1			
	5600 1063	1			Non-Registered Markets
					Six Cylinder
					w/Man. Trans.
	5600 1648	1			w/System Sentry, 49 State, Canada
	5600 1750	1			w/System Sentry, Calif.
	5600 1649	1			w/o System Sentry, 49 State, Canada
	5600 1749	1			w/o System Sentry, Calif.
					w/Auto. Trans.
	5600 1648	1			w/System Sentry, 49 State, Canada
	5600 1668	1			w/System Sentry, Calif. w/Microprocessor893300201 9
	5600 1906	1			w/System Sentry, Calif. w/Microprocessor895300265 5
	5600 1649	1			w/o System Sentry, 49 State, Canada
	5600 1667	1			w/o System Sentry, Calif. w/Microprocessor 8933002019
	5600 1905	1			w/o System Sentry, Calif. w/Microprocessor 8953002019
	5600 0666	1			Economic Commission of Europe
	5600 1584	1			Diesel
2					WIRING, Alternator
	5600 1126	1			Four Cylinder
3					WIRING, Transmission
					Four Cylinder w/Man. Trans.
					With Transmission No. 8953001547, 8953001551, 8953002269 or 8953002270
	5600 1542	1			With System Sentry
	5600 1541	1			Without System Sentry
					With Transmission No. 8953001565, 8953001566, 8953002264 or 8953002265
	5600 1544	1			With System Sentry
	5600 1545	1			Without Systen Sentry
					Four Cylinder w/Automatic Transmission
					With Transmission No. 8953001547, 8953001551, 8953002269 or 8953002270
	5600 1542	1			With System Sentry
	5600 1541	1			Without System Sentry

MODEL CODES

16=Cherokee 2 Dr.(1981-83)
17=Cherokee 2 Dr.(1981-83)
73=Cherokee 2WD-2 Dr.(1984-86)
74=Cherokee 2WD-4 Dr.(1984-86)
18=Cherokee 4 Dr.(1981-83)
77=Cherokee 4WD-2 Dr.(1984-86)
78=Cherokee 4WD-4 Dr.(1984-86)
85=CJ-5 (1981-83)
86=CJ-6(1981)
87=CJ-7(1981-86)
88=CJ-8, Scrambler(1981-86)
64=Comanche 2WD-6 Ft. Box(1986)
66=Comanche 2WD-7 Ft. Box(1986)
63=Comanche 4WD-6 Ft. Box(1986)
65=Comanche 4WD-7 Ft. Box(1986)
15=Grand Wagoneer 4 Dr.(1984-86)
25=J-10 Truck 7 Ft. Box(1981-84)
26=J10 Truck 8 Ft. Box(1981-86)
27=J-20 Truck 8 Ft. Box(1981-86)
15=Wagoneer 4 Dr.(1981-83)
75=Wagoneer 4WD-4 Dr.(1984-86)

BODY
CJ=CJ-5, CJ-6, CJ-7, CJ-8, Scrambler(1981-86)
MJ=Comanche Pickup(1986)

STYLES
SJ=Wagoneer(1981-83), Grand Wagoneer(1984-86), Cherokee(1981-83), J-10, J-20(1981-86)
XJ=Wagoneer(1984-86), Cherokee(1984-86)

AR = Use as Required - = Non Illustrated Part P.A.R. = Paint as Required

81J08 9400

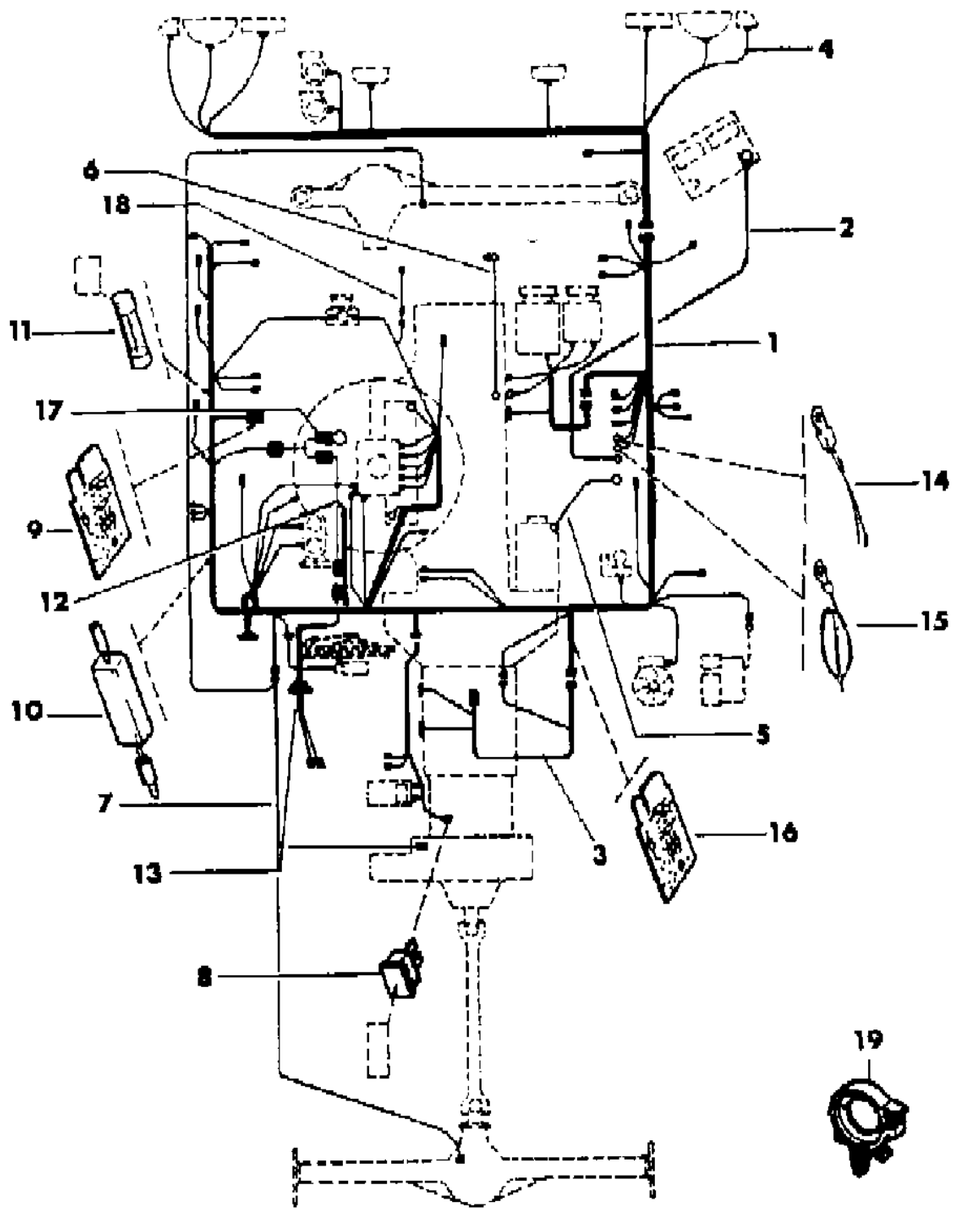

ITEM	PART NUMBER	QTY	BODY	MODEL	DESCRIPTION
					With Transmission No. 8953001565, 8953001566, 8953002264
					or 8953002265
	5600 1544	1			With System Sentry
	5600 1545	1			Without System Sentry
					Four Cylinder With Automatic Transmission
					With Air Conditioning
	5600 1539	1			With System Sentry
	5600 1243	1			Without System Sentry
					Without Air Conditioning
	5600 1538	1			With System Sentry
	5600 1243	1			Without System Sentry
					Six Cylinder With Manual Transmission
					With Transmission No. 8953001547, 8953001566, 8953002264
					or 8953002270
	5600 1543	1			With System Sentry
	5600 1540	1			Without System Sentry
					With Transmission No. 8953001565, 8953001566, 8953002264
					or 8953002270
	5600 1547	1			With System Sentry
	5600 1546	1			Without System Sentry
					Six Cylinder w/Automatic Transmission
	5600 1539	1			With System Sentry
	5600 1243	1			Without System Sentry
					Diesel w/Manual Transmission
	5600 1751	1			With Transmission No. 8953001565, 8953001566, 8953002264
					or 8953002265
	5600 1753	1			With Transmission No. 8953001565, 8953001566, 8953002264
					or 8953002265
	5600 1539	1			Diesel With Automatic Transmission
4					WIRING, Front Lights
	5600 0831	1			
	5600 1064	1			Economic Commission of Europe
5	5600 0301	1			WIRING, Starter
6					WIRING, Ground
	5600 0761	1			Four Cylinder
	J324 0726	1			Six Cylinder
	5600 0786	1			Diesel
7	5600 0672	1			WIRING, Axle
8	J323 1212	1			FUSE, 4 AMP

MODEL CODES
16=Cherokee 2 Dr.(1981-83)
17=Cherokee 2 Dr.(1981-83)
73=Cherokee 2WD-2 Dr.(1984-86)
74=Cherokee 2WD-4 Dr.(1984-86)
18=Cherokee 4 Dr.(1981-83)
77=Cherokee 4WD-2 Dr.(1984-86)
78=Cherokee 4WD-4 Dr.(1984-86)
85=CJ-5 (1981-83)
86=CJ-6(1981)
87=CJ-7(1981-86)
88=CJ-8, Scrambler(1981-86)
64=Comanche 2WD-6 Ft. Box(1986)
66=Comanche 2WD-7 Ft. Box(1986)
63=Comanche 4WD-6 Ft. Box(1986)
65=Comanche 4WD-7 Ft. Box(1986)
15=Grand Wagoneer 4 Dr.(1984-86)
25=J-10 Truck 7 Ft. Box(1981-84)
26=J10 Truck 8 Ft. Box(1981-86)
27=J-20 Truck 8 Ft. Box(1981-86)
15=Wagoneer 4 Dr.(1981-83)
75=Wagoneer 4WD-4 Dr.(1984-86)

BODY
CJ=CJ-5, CJ-6, CJ-7, CJ-8, Scrambler(1981-86)
MJ=Comanche Pickup(1986)

STYLES
SJ=Wagoneer(1981-83), Grand Wagoneer(1984-86), Cherokee(1981-83), J-10, J-20(1981-86)
XJ=Wagoneer(1984-86), Cherokee(1984-86)

AR = Use as Required - = Non Illustrated Part P.A.R. = Paint as Required

81J08 9400

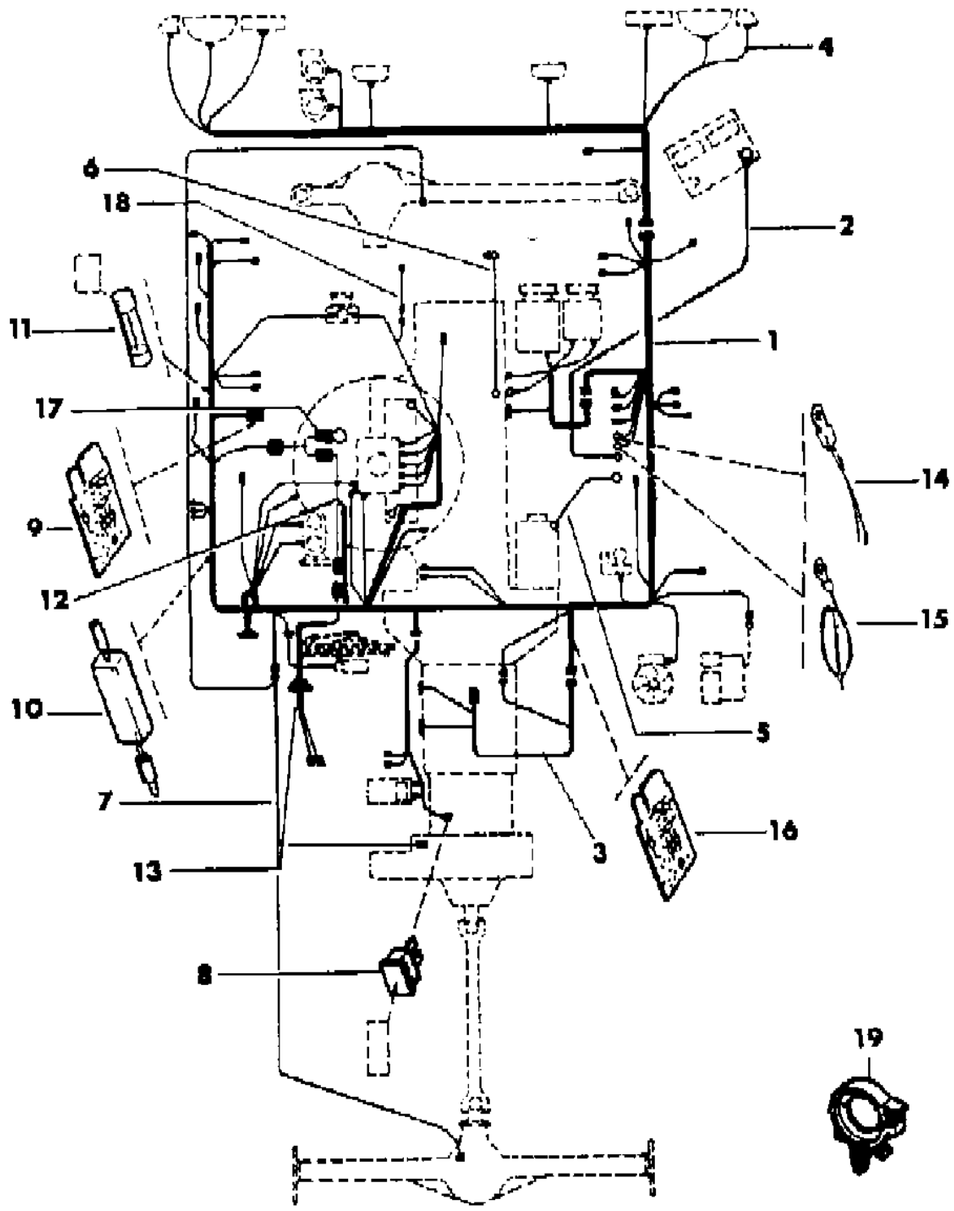

ITEM	PART NUMBER	QTY	BODY	MODEL	DESCRIPTION
9					DIODE, Idle Speedup
	J324 0744	1			Four Cylinder
10					DIODE, Idle Speedup
	3600 0597	1			Six Cylinder
11					FUSE
	8350 1100	1			1 AMP
	3600 1416	1			2 AMP
12					WIRING, Wide Open Throttle
	5600 1582	1			Diesel With Automatic Transmission
13					WIRING, Wide Open Throttle
	5600 1585	1			Diesel With Automatic Transmission
14	J813 4201	2			FUSIBLE LINK
15	J813 3785	1			FUSIBLE LINK
16	3300 1376	1			DIODE, Emission Lamp
17					WIRE, Wide Open Throttle
	5600 1586	1			Diesel With Automatic Transmission
18					WIRE, Diesel Control
	5600 1345	1			Fuel Shutoff
	5600 1740	1			Transmission Ground
19	J417 5403	AR			CLIP

MODEL CODES

16=Cherokee 2 Dr.(1981-83)
17=Cherokee 2 Dr.(1981-83)
73=Cherokee 2WD-2 Dr.(1984-86)
74=Cherokee 2WD-4 Dr.(1984-86)
18=Cherokee 4 Dr.(1981-83)
77=Cherokee 4WD-2 Dr.(1984-86)
78=Cherokee 4WD-4 Dr.(1984-86)
85=CJ-5 (1981-83)
86=CJ-6(1981)
87=CJ-7(1981-86)
88=CJ-8, Scrambler(1981-86)
64=Comanche 2WD-6 Ft. Box(1986)
66=Comanche 2WD-7 Ft. Box(1986)
63=Comanche 4WD-6 Ft. Box(1986)
65=Comanche 4WD-7 Ft. Box(1986)
15=Grand Wagoneer 4 Dr.(1984-86)
25=J-10 Truck 7 Ft. Box(1981-84)
26=J10 Truck 8 Ft. Box(1981-86)
27=J-20 Truck 8 Ft. Box(1981-86)
15=Wagoneer 4 Dr.(1981-83)
75=Wagoneer 4WD-4 Dr.(1984-86)

BODY
CJ=CJ-5, CJ-6, CJ-7, CJ-8, Scrambler(1981-86)
MJ=Comanche Pickup(1986)

STYLES
SJ=Wagoneer(1981-83), Grand Wagoneer(1984-86), Cherokee(1981-83), J-10, J-20(1981-86)
XJ=Wagoneer(1984-86), Cherokee(1984-86)

AR = Use as Required - = Non Illustrated Part P.A.R. = Paint as Required

WIRING--ENGINE COMPARTMENT XJ CHEROKEE, XJ WAGONEER, COMANCHE 1986
Figure 8-9500

81J08 9500

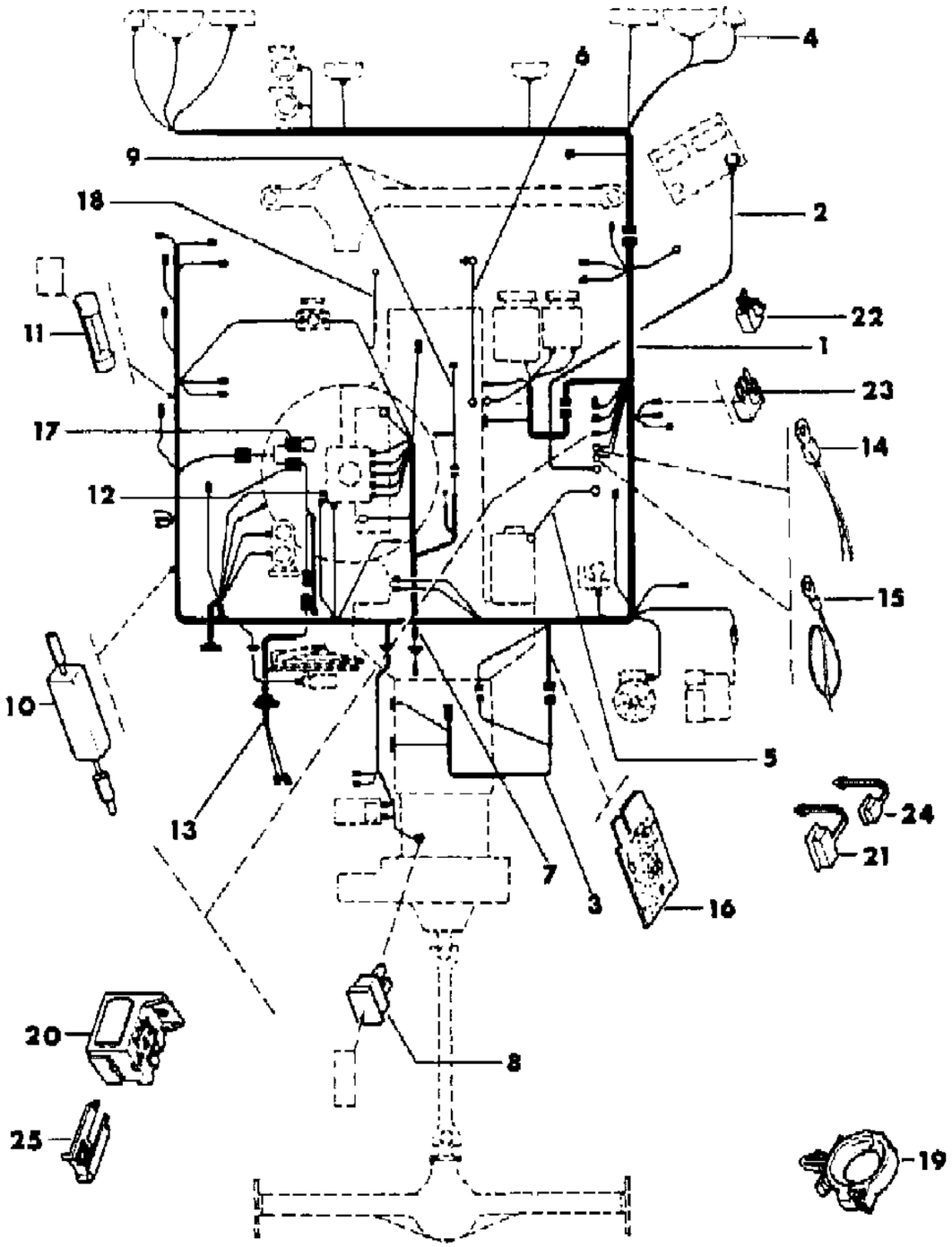

ITEM	PART NUMBER	QTY	BODY	MODEL	DESCRIPTION
1					HARNESS, Engine
					Four Cylinder Injected
	5600 2150	1			w/A/C
	5600 2149	1			w/o A/C
	5600 2151	1			Four Cylinder Carbureted
					Six Cylinder
	5600 2152	1			49 State, Canada
	5600 2153	1			Calif.
	5600 2002	1			Diesel
2					WIRING, Alternator
					Four Cylinder
	5600 2098	1			Injected
	5600 1126	1			Carbureted
3					WIRING, Transmission
					Two Wheel Drive, Man. Tran.
	5600 2041	1			Four Cylinder
	5600 1753	1			Six Cylinder
	5600 2038	1			Two Wheel Drive, Auto. Trans.
					Four Wheel Drive, Man. Trans.
	5600 2041	1			Four Cylinder
	5600 1753	1			Six Cylinder
					Four Wheel Drive, Auto. Trans.
	5600 2038	1			w/AM207 Transfer Case
					w/AM228 Transfer Case
	5600 2154	1			Four Cylinder Injected
	5600 2155	1			Four Cylinder Carbureted
	5600 2155	1			Six Cylinder
4					WIRING, Front Lights
	5600 0831	1			Cherokee/Comanche
	5600 1673	1			Wagoneer
	5600 1064	1			Economic Commission of Europe
5					WIRING, Starter
	5600 0301	1			Four Cylinder
6					WIRING, Ground
	5600 0761	1			Four Cylinder
	J324 0726	1			Six Cylinder
	5600 0786	1			Diesel
7					WIRING, Electronic Engine Control
	5600 2099	1			Four Cylinder Injected

MODEL CODES

16=Cherokee 2 Dr.(1981-83)	78=Cherokee 4WD-4 Dr.(1984-86)	64=Comanche 2WD-6 Ft. Box(1986)	25=J-10 Truck 7 Ft. Box(1981-84)
17=Cherokee 2 Dr.(1981-83)	85=CJ-5 (1981-83)	66=Comanche 2WD-7 Ft. Box(1986)	26=J10 Truck 8 Ft. Box(1981-86)
73=Cherokee 2WD-2 Dr.(1984-86)	86=CJ-6(1981)	63=Comanche 4WD-6 Ft. Box(1986)	27=J-20 Truck 8 Ft. Box(1981-86)
74=Cherokee 2WD-4 Dr.(1984-86)	87=CJ-7(1981-86)	65=Comanche 4WD-7 Ft. Box(1986)	15=Wagoneer 4 Dr.(1981-83)
18=Cherokee 4 Dr.(1981-83)	88=CJ-8, Scrambler(1981-86)	15=Grand Wagoneer 4 Dr.(1984-86)	75=Wagoneer 4WD-4 Dr.(1984-86)
77=Cherokee 4WD-2 Dr.(1984-86)			

BODY
CJ=CJ-5, CJ-6, CJ-7, CJ-8, Scrambler(1981-86)
MJ=Comanche Pickup(1986)

STYLES
SJ=Wagoneer(1981-83), Grand Wagoneer(1984-86), Cherokee(1981-83), J-10, J-20(1981-86)
XJ=Wagoneer(1984-86), Cherokee(1984-86)

AR = Use as Required - = Non Illustrated Part P.A.R. = Paint as Required

WIRING--ENGINE COMPARTMENT XJ CHEROKEE, XJ WAGONEER, COMANCHE 1986
Figure 8-9500

81J08 9500

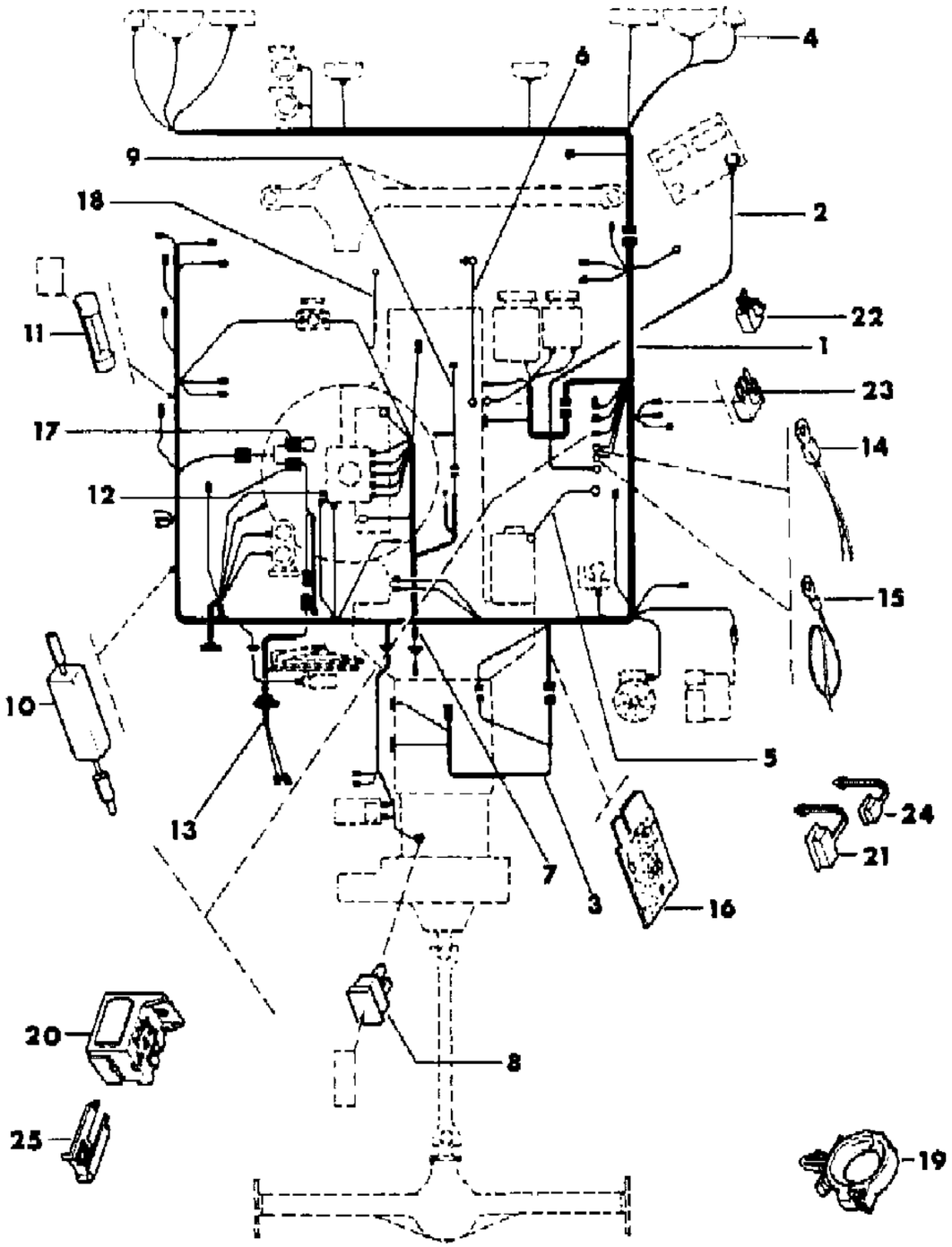

ITEM	PART NUMBER	QTY	BODY	MODEL	DESCRIPTION
8	J323 1212	1			FUSE, 4 AMP
9					WIRING, Idle Speedup
	5600 2101	1			Four Cylinder Injected
	5600 2100	1			Four Cylinder Carbureted
	5600 2100	1			Six Cylinder
10					DIODE, Idle Speedup
	3600 0597	1			Six Cylinder
11					FUSE
	8350 1100	1			1 AMP
	3600 1416	1			2 AMP
	J323 1215	1			10 AMP
12	5600 1582	1			WIRING, Diesel Wide Open Throttle
13	5600 1585	1			WIRING, Diesel Wide Open Throttle, Under Dash
14	J813 4201	2			FUSIBLE LINK, 18 Gauge
15	J813 3785	1			FUSIBLE LINK, 14 Gauge
16					DIODE, Emission Lamp
	3300 1376	1			Calif.
	S204 0820	1			"E" Cell Timer
17					WIRE, Compressor Jumper
	5600 1586	1			Diesel
18					WIRE, Diesel Control
	5600 1345	1			Fuel Shut-off
	5600 1740	1			Transmission Ground
19	J417 5403	AR			CLIP
20	J417 9106	2			CONNECTOR
21	J416 0818	1			COVER, 15 Hole
22	3600 1676	1			DIODE MODULE, Six Cylinder ***
23	5600 1916	1			DIODE MODULE, Four Cylinder ***
24	J416 0718	1			COVER, 6 Hole
25	3417 5430	1			RETAINER

MODEL CODES

16=Cherokee 2 Dr.(1981-83)
17=Cherokee 2 Dr.(1981-83)
73=Cherokee 2WD-2 Dr.(1984-86)
74=Cherokee 2WD-4 Dr.(1984-86)
18=Cherokee 4 Dr.(1981-83)
77=Cherokee 4WD-2 Dr.(1984-86)
78=Cherokee 4WD-4 Dr.(1984-86)
85=CJ-5 (1981-83)
86=CJ-6(1981)
87=CJ-7(1981-86)
88=CJ-8, Scrambler(1981-86)
64=Comanche 2WD-6 Ft. Box(1986)
66=Comanche 2WD-7 Ft. Box(1986)
63=Comanche 4WD-6 Ft. Box(1986)
65=Comanche 4WD-7 Ft. Box(1986)
15=Grand Wagoneer 4 Dr.(1984-86)
25=J-10 Truck 7 Ft. Box(1981-84)
26=J10 Truck 8 Ft. Box(1981-86)
27=J-20 Truck 8 Ft. Box(1981-86)
15=Wagoneer 4 Dr.(1981-83)
75=Wagoneer 4WD-4 Dr.(1984-86)

BODY
CJ=CJ-5, CJ-6, CJ-7, CJ-8, Scrambler(1981-86)
MJ=Comanche Pickup(1986)

STYLES
SJ=Wagoneer(1981-83), Grand Wagoneer(1984-86), Cherokee(1981-83), J-10, J-20(1981-86)
XJ=Wagoneer(1984-86), Cherokee(1984-86)

AR = Use as Required - = Non Illustrated Part P.A.R. = Paint as Required

« RETURN TO GROUP INDEX

WIRING--INSTRUMENT PANEL XJ CHEROKEE, XJ WAGONEER, COMANCHE
Figure 8-9600

81J08 9600

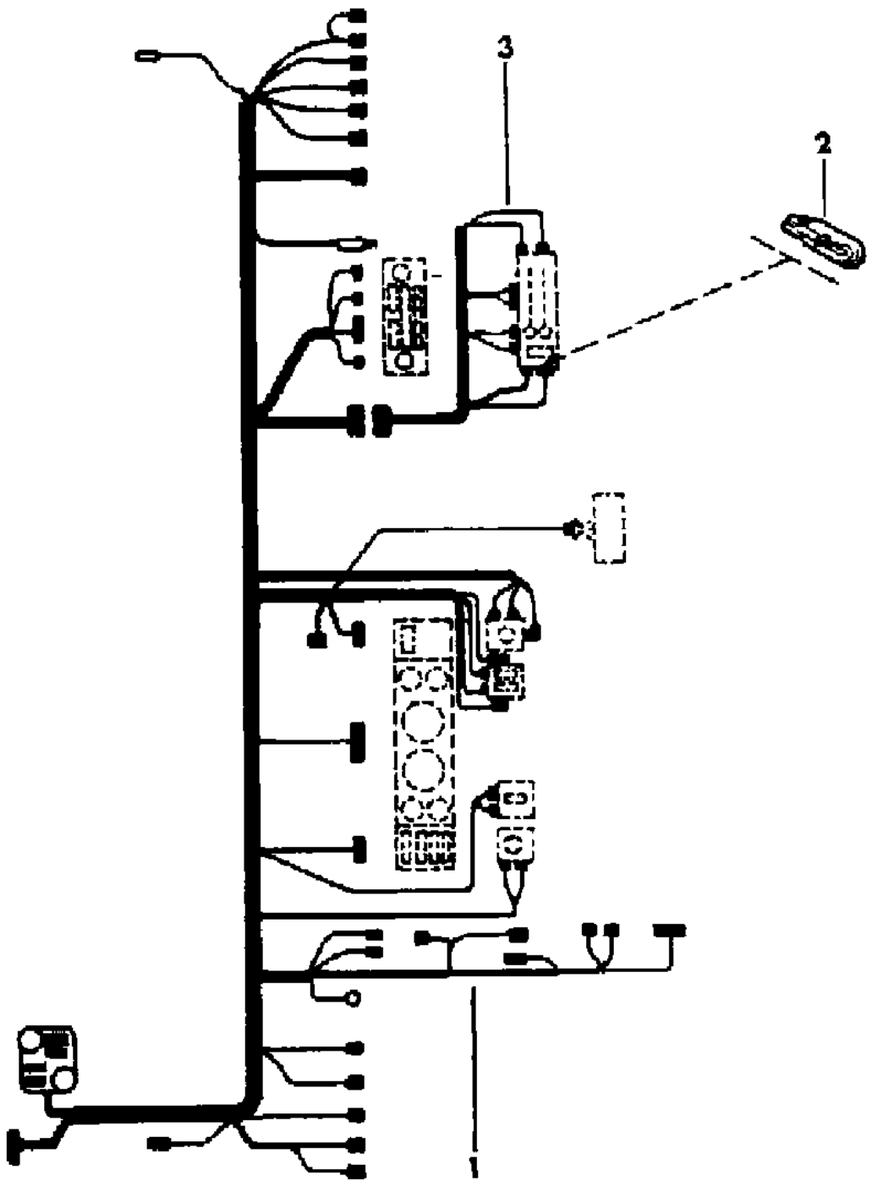

ITEM	PART NUMBER	QTY	BODY	MODEL	DESCRIPTION
1					WIRING, Instrument Panel
					1984
					w/A/C
	5600 1166	1			w/Headlight Delay
	5600 1168	1			w/o Headlight Delay
	5600 1167	1			w/A/C
					1985
	5600 1362	1			w/Headlight Delay
					w/o Headlight Delay
	5600 1363	1			w/Fog Lamps
	5600 1364	1			w/o Fog Lamps
	5600 1438	1			Economic Commission of Europe
	5600 1437	1			Diesel
					1986
					Four or Six Cylinder
	5600 1678	1	XJ		
	5600 2107	1	MJ		
					Diesel
	5600 1679	1	XJ		
	5600 2108	1	MJ		
	5601 680	1	XJ		Economic Commission of Europe
2					WIRING, Heater
					Four or Six Cylinder
					w/A/C
	5600 1169	1			1984-85
	5600 1847	1			1986
					w/o A/C
	5600 1170	1			1984-85
	5600 1846	1			1986
	5600 1847	1			w/American Air
	5600 0614	1			1984-85: EXPORT
					Diesel
					w/A/C
	5600 1334	1			1985
	5600 1849	1			1986
					w/o A/C
	5600 1361	1			1985
	5600 1848	1			1986
3	J812 5723	2			BULB,"74"

MODEL CODES

16=Cherokee 2 Dr.(1981-83)	78=Cherokee 4WD-4 Dr.(1984-86)	64=Comanche 2WD-6 Ft. Box(1986)	25=J-10 Truck 7 Ft. Box(1981-84)
17=Cherokee 2 Dr.(1981-83)	85=CJ-5 (1981-83)	66=Comanche 2WD-7 Ft. Box(1986)	26=J10 Truck 8 Ft. Box(1981-86)
73=Cherokee 2WD-2 Dr.(1984-86)	86=CJ-6(1981)	63=Comanche 4WD-6 Ft. Box(1986)	27=J-20 Truck 8 Ft. Box(1981-86)
74=Cherokee 2WD-4 Dr.(1984-86)	87=CJ-7(1981-86)	65=Comanche 4WD-7 Ft. Box(1986)	15=Wagoneer 4 Dr.(1981-83)
18=Cherokee 4 Dr.(1981-83)	88=CJ-8, Scrambler(1981-86)	15=Grand Wagoneer 4 Dr.(1984-86)	75=Wagoneer 4WD-4 Dr.(1984-86)
77=Cherokee 4WD-2 Dr.(1984-86)			

BODY
CJ=CJ-5, CJ-6, CJ-7, CJ-8, Scrambler(1981-86)
MJ=Comanche Pickup(1986)

STYLES
SJ=Wagoneer(1981-83), Grand Wagoneer(1984-86), Cherokee(1981-83), J-10, J-20(1981-86)
XJ=Wagoneer(1984-86), Cherokee(1984-86)

AR = Use as Required - = Non Illustrated Part P.A.R. = Paint as Required

« RETURN TO GROUP INDEX

81J08 9700

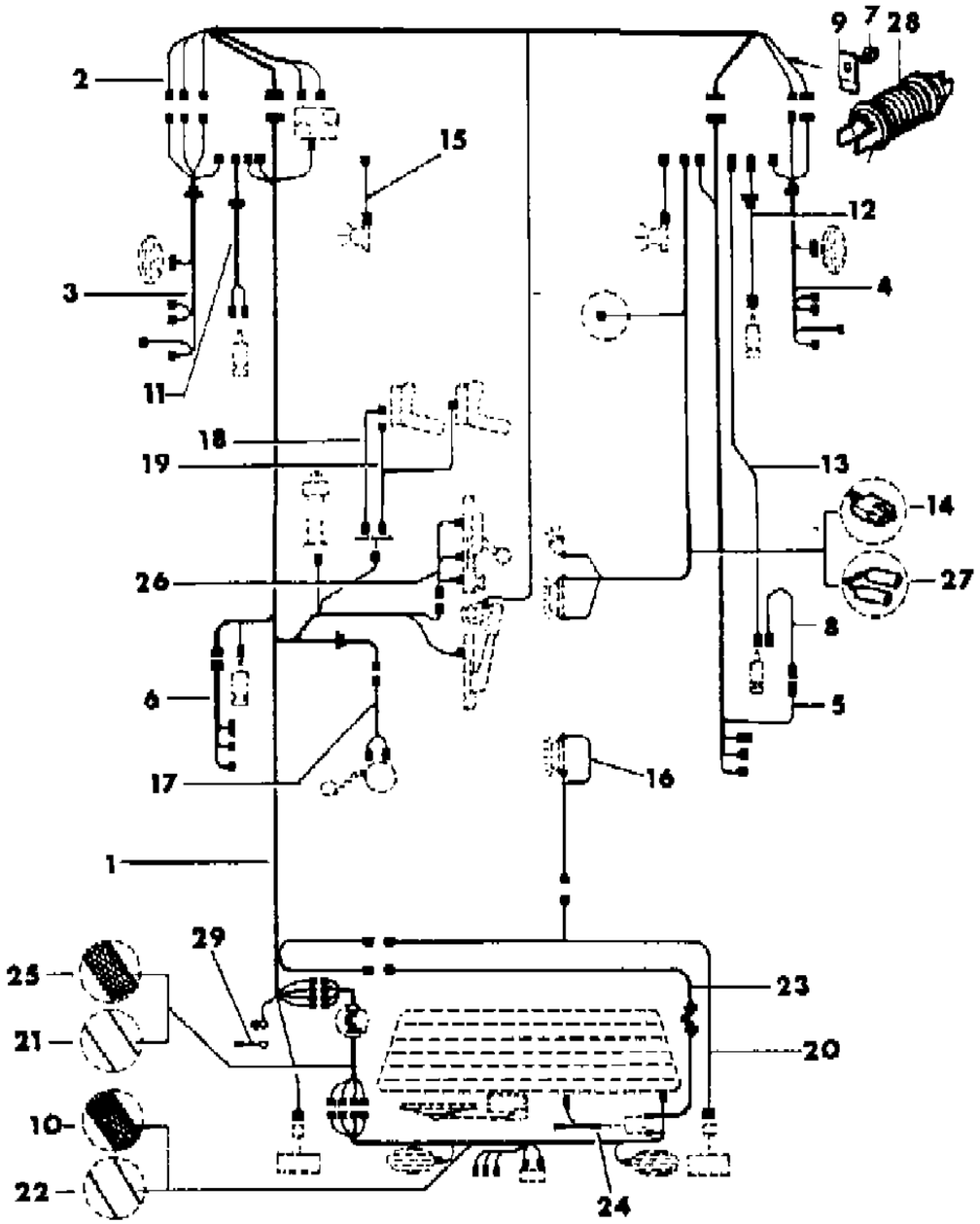

ITEM	PART NUMBER	QTY	BODY	MODEL	DESCRIPTION
1					WIRING, Body
	5600 1400	1			w/Trailer Tow Package
	5600 1161	1			w/o Trailer Tow Package
2					WIRING, Front Cross
					w/Keyless Entry System
	5600 1365	1			w/Electric Mirror
	5600 1366	1			w/o Electric Mirror
					w/o Keyless Entry System
	5600 1157	1			w/Electric Mirror
					w/o Electric Mirror
	5600 1164	1			w/Electric Windows
	5600 1165	1			w/o Electric Windows
3					WIRING, Door
					w/Electric Windows
	5600 1158	1		73,77	
	5600 1156	1		74,75,7	
	5600 0444	1			w/o Electric Windows
4					WIRING, Door
	5600 0656	1			w/Electric Windows
	5600 0444	1			w/o Electric Windows
5					WIRING, Door
	5600 0773	1			w/Electric Windows
	5600 0775	1			w/o Electric Windows
6					WIRING, Door
	5600 0772	1			w/Electric Windows
	5600 0774	1			w/o Electric Windows
7	3420 1489	8			SCREW
8	5600 0621	1			WIRING, Courtesy Lamp
9	J090 8834	8			CLAMP
10					WIRING, Lift Door (Refer to I.S. Note 23, M.R. 244))
	5600 1297	1			
	5600 1300	1			
11	5600 0613	1			WIRING, Dome Lamp
12	5600 0612	1			WIRING, Dome Lamp
13	5600 0776	1			WIRING, Dome Lamp
14	5600 0858	1			WIRING, Dome Lamp
15	5600 0678	1			WIRING, Courtesy Lamp
16	5600 0596	1			WIRING, Dome Lamp
17	5600 0762	1			WIRING, Fuel Tank

MODEL CODES

16=Cherokee 2 Dr.(1981-83)	78=Cherokee 4WD-4 Dr.(1984-86)	64=Comanche 2WD-6 Ft. Box(1986)	25=J-10 Truck 7 Ft. Box(1981-84)
17=Cherokee 2 Dr.(1981-83)	85=CJ-5 (1981-83)	66=Comanche 2WD-7 Ft. Box(1986)	26=J10 Truck 8 Ft. Box(1981-86)
73=Cherokee 2WD-2 Dr.(1984-86)	86=CJ-6(1981)	63=Comanche 4WD-6 Ft. Box(1986)	27=J-20 Truck 8 Ft. Box(1981-86)
74=Cherokee 2WD-4 Dr.(1984-86)	87=CJ-7(1981-86)	65=Comanche 4WD-7 Ft. Box(1986)	15=Wagoneer 4 Dr.(1981-83)
18=Cherokee 4 Dr.(1981-83)	88=CJ-8, Scrambler(1981-86)	15=Grand Wagoneer 4 Dr.(1984-86)	75=Wagoneer 4WD-4 Dr.(1984-86)
77=Cherokee 4WD-2 Dr.(1984-86)			

BODY
CJ=CJ-5, CJ-6, CJ-7, CJ-8, Scrambler(1981-86)
MJ=Comanche Pickup(1986)

STYLES
SJ=Wagoneer(1981-83), Grand Wagoneer(1984-86), Cherokee(1981-83), J-10, J-20(1981-86)
XJ=Wagoneer(1984-86), Cherokee(1984-86)

AR = Use as Required - = Non Illustrated Part P.A.R. = Paint as Required

81J08 9700

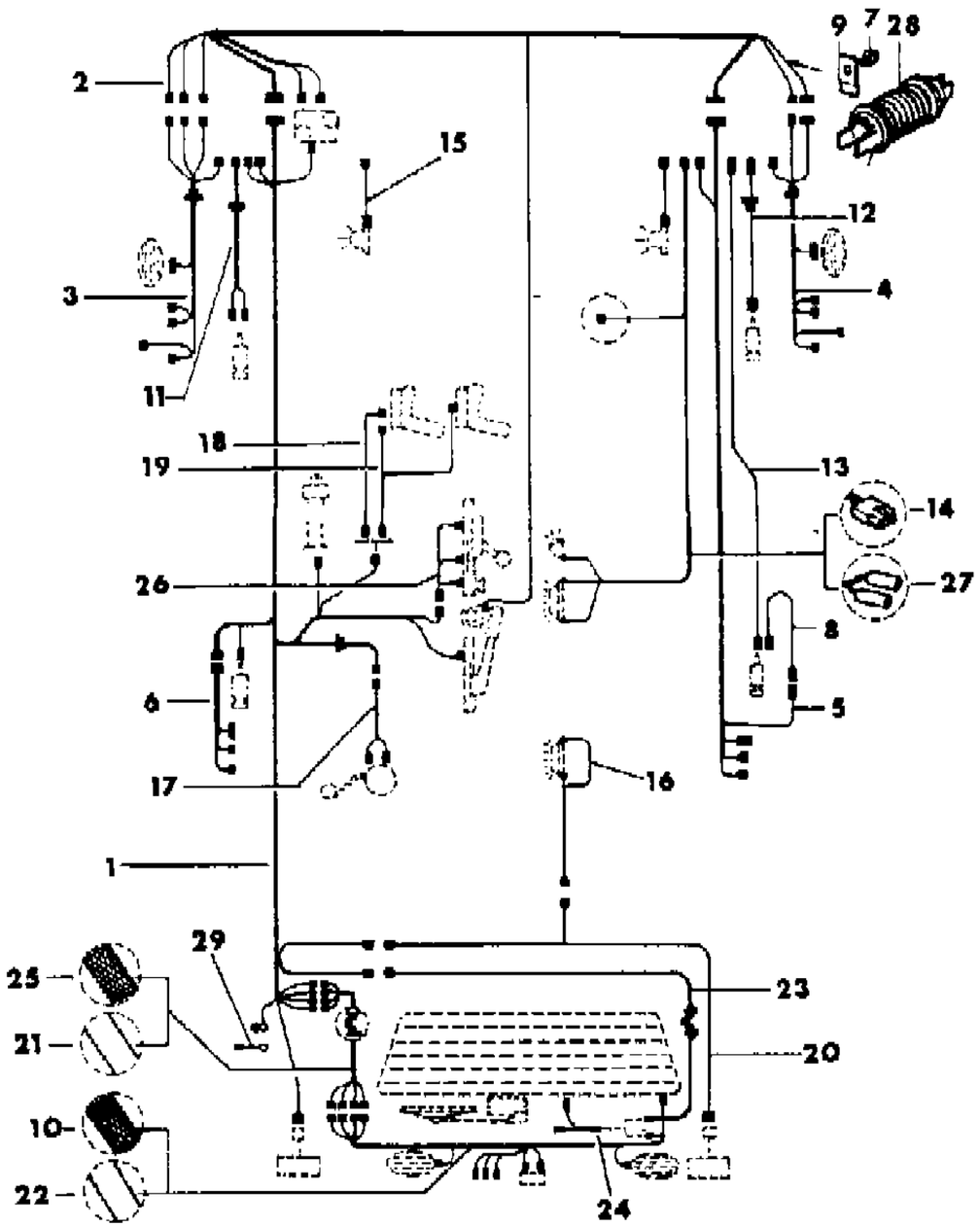

ITEM	PART NUMBER	QTY	BODY	MODEL	DESCRIPTION
18	5600 0667	1			WIRING, Seat
19	5600 0668	1			WIRING, Seat
20	5600 0438	1			WIRING, Body
21					WIRING, Lift Door
	5600 0894	1			w/Electric Door Locks
	5600 1211	1			w/o Electric Door Locks
22					WIRING, Lift Door
	5600 0893	1			w/Electric Door Locks
	5600 0891	1			w/o Electric Door Locks
23	5600 0898	1			WIRING, Wiper
24	5600 0897	1			WIRING, Wiper
25					WIRING, Lift Door
	5600 1300	1			w/Electric Door Locks
	5600 1299	1			w/o Electric Door Locks
26	5600 0756	1			WIRING, Console
27	5600 1234	1			WIRING, Dome Lamp
28	5500 1138	4			TUBE, Protector
29	8310 0013	1			WIRE, Wiper Ground

MODEL CODES

16=Cherokee 2 Dr.(1981-83)
17=Cherokee 2 Dr.(1981-83)
73=Cherokee 2WD-2 Dr.(1984-86)
74=Cherokee 2WD-4 Dr.(1984-86)
18=Cherokee 4 Dr.(1981-83)
77=Cherokee 4WD-2 Dr.(1984-86)
78=Cherokee 4WD-4 Dr.(1984-86)
85=CJ-5 (1981-83)
86=CJ-6(1981)
87=CJ-7(1981-86)
88=CJ-8, Scrambler(1981-86)
64=Comanche 2WD-6 Ft. Box(1986)
66=Comanche 2WD-7 Ft. Box(1986)
63=Comanche 4WD-6 Ft. Box(1986)
65=Comanche 4WD-7 Ft. Box(1986)
15=Grand Wagoneer 4 Dr.(1984-86)
25=J-10 Truck 7 Ft. Box(1981-84)
26=J10 Truck 8 Ft. Box(1981-86)
27=J-20 Truck 8 Ft. Box(1981-86)
15=Wagoneer 4 Dr.(1981-83)
75=Wagoneer 4WD-4 Dr.(1984-86)

BODY
CJ=CJ-5, CJ-6, CJ-7, CJ-8, Scrambler(1981-86)
MJ=Comanche Pickup(1986)

STYLES
SJ=Wagoneer(1981-83), Grand Wagoneer(1984-86), Cherokee(1981-83), J-10, J-20(1981-86)
XJ=Wagoneer(1984-86), Cherokee(1984-86)

AR = Use as Required - = Non Illustrated Part P.A.R. = Paint as Required

WIRING--BODY XJ CHEROKEE, XJ WAGONEER 1986
Figure 8-9800

81J08 9800

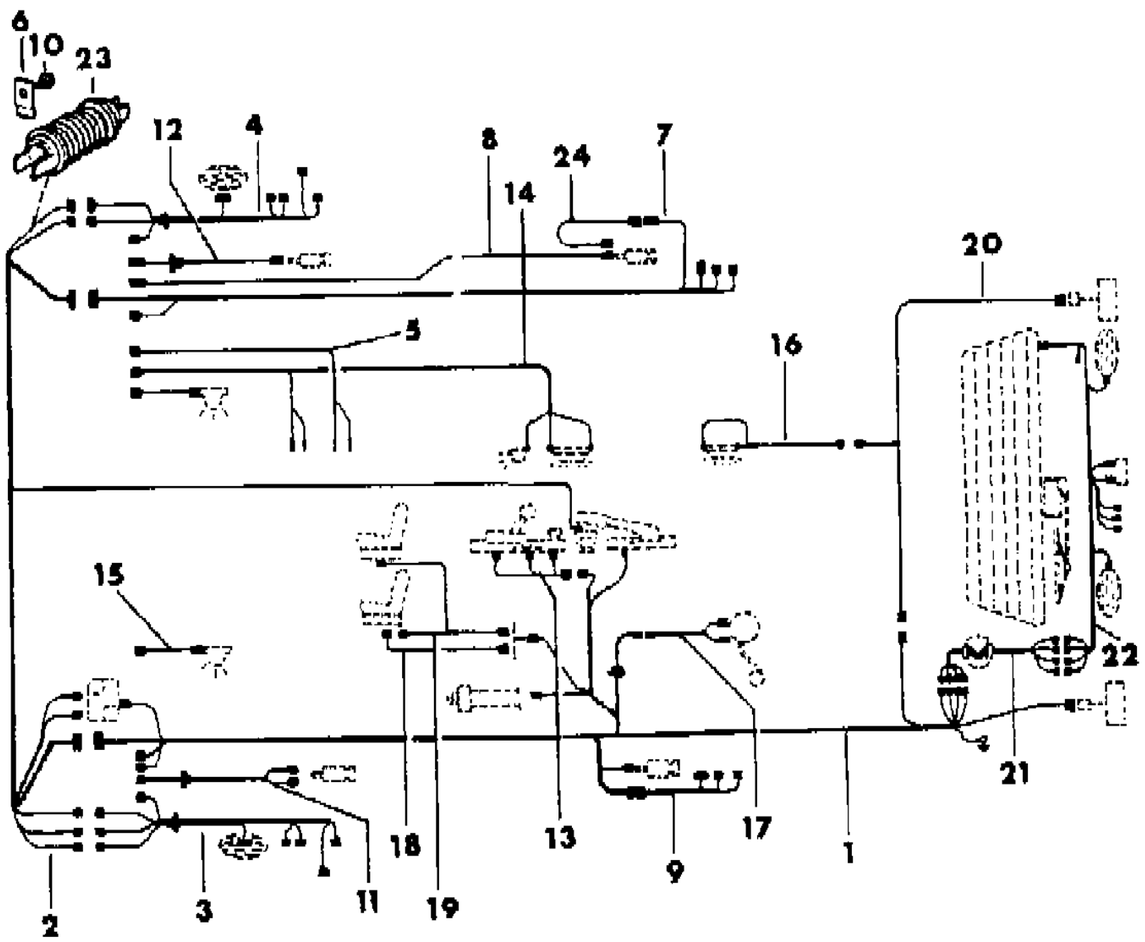

ITEM	PART NUMBER	QTY	BODY	MODEL	DESCRIPTION
1	5600 1686	1			WIRING, Body
2					WIRING, Front Cross
	5600 1746	1			w/Electric Windows
					w/o Electric Windows
	5600 1858	1			w/Keyless Entry
	5600 1851	1			w/o Keyless Entry
3					WIRING, Door
	5600 1856	1			w/Electric Windows
	5600 1850	1			w/o Electric Windows
4					WIRING, Door
	5600 1857	1			w/Electric Windows
	5600 1850	1			w/o Electric Windows
5	5600 2092	1			WIRING, Lighted Vanity
6	J090 8834	8			CLAMP
7					WIRING, Door
	5600 2106	1			w/Electric Windows
	5600 2105	1			w/o Electric Windows
8	5600 0621	2			WIRING, Courtesy Lamp
9	5600 0772	1			WIRING, Door
10	3420 1489	8			SCREW
11	5600 0613	1			WIRING, Dome Lamp
12	5600 0612	1			WIRING, Dome Lamp
13	5600 2396	1			WIRING, Console
14	5600 2094	1			WIRING, Dome Lamp
15	5600 0678	1			WIRING, Courtesy Lamp
16	5600 0596	1			WIRING, Dome Lamp
17					WIRING, Fuel Tank
	5600 1859	1			Four Cylinder Injected
	5600 0762	1			Four Cylinder Carbureted
	5600 1860	1			Six Cylinder
	5600 1860	1			Diesel
18	5600 1229	1			WIRING, Seat
19	5600 1230	1			WIRING, Seat
20	5600 0438	1			WIRING, Body
21	5600 1900	1			WIRING, Lift Door
22	5600 1898	1			WIRING, Lift Door
23	5500 1138	4			TUBE, Protector
24	5600 2318	1			WIRING, Rear Door Switch

MODEL CODES
16=Cherokee 2 Dr.(1981-83)
17=Cherokee 2 Dr.(1981-83)
73=Cherokee 2WD-2 Dr.(1984-86)
74=Cherokee 2WD-4 Dr.(1984-86)
18=Cherokee 4 Dr.(1981-83)
77=Cherokee 4WD-2 Dr.(1984-86)
78=Cherokee 4WD-4 Dr.(1984-86)
85=CJ-5 (1981-83)
86=CJ-6(1981)
87=CJ-7(1981-86)
88=CJ-8, Scrambler(1981-86)
64=Comanche 2WD-6 Ft. Box(1986)
66=Comanche 2WD-7 Ft. Box(1986)
63=Comanche 4WD-6 Ft. Box(1986)
65=Comanche 4WD-7 Ft. Box(1986)
15=Grand Wagoneer 4 Dr.(1984-86)
25=J-10 Truck 7 Ft. Box(1981-84)
26=J10 Truck 8 Ft. Box(1981-86)
27=J-20 Truck 8 Ft. Box(1981-86)
15=Wagoneer 4 Dr.(1981-83)
75=Wagoneer 4WD-4 Dr.(1984-86)

BODY
CJ=CJ-5, CJ-6, CJ-7, CJ-8, Scrambler(1981-86)
MJ=Comanche Pickup(1986)

STYLES
SJ=Wagoneer(1981-83), Grand Wagoneer(1984-86), Cherokee(1981-83), J-10, J-20(1981-86)
XJ=Wagoneer(1984-86), Cherokee(1984-86)

AR = Use as Required - = Non Illustrated Part P.A.R. = Paint as Required

« RETURN TO GROUP INDEX

WIRING--BODY COMANCHE 1986
Figure 8-9900

81J08 9900

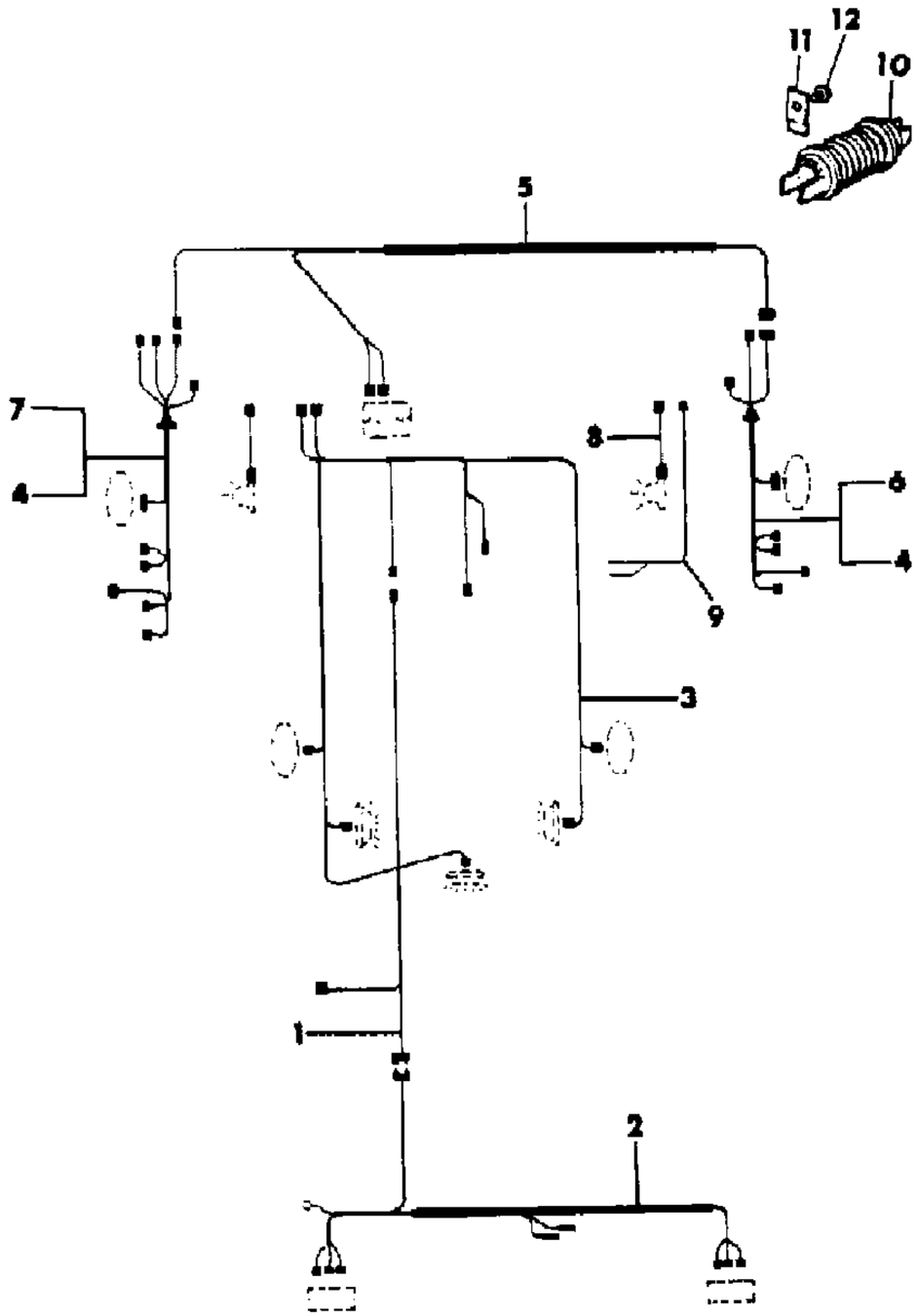

ITEM	PART NUMBER	QTY	BODY	MODEL	DESCRIPTION
1	5600 2109	1			WIRING, Underbody
2	5600 0847	1			WIRING, Rear Light
3	5600 2110	1			WIRING, Cab
4					WIRING, Front Cross
	5600 1683	1			w/Electric Window
	5600 1851	1			w/o Electric Window
5					WIRING, Door
	5600 1856	1			w/Electric Window
	5600 1850	1			w/o Electric Window
6					WIRING, Door
	5600 1857	1			w/Electric Window
	5600 1850	1			w/o Electric Window
7	3420 1489	2			SCREW
8	J090 8834	2			CLAMP
9	5600 0678	2			WIRING, Courtesy Lamp
10	5600 2092	1			WIRING, Lighted Vanity
11	5500 1138	2			TUBE, Protector

MODEL CODES

16=Cherokee 2 Dr.(1981-83)
17=Cherokee 2 Dr.(1981-83)
73=Cherokee 2WD-2 Dr.(1984-86)
74=Cherokee 2WD-4 Dr.(1984-86)
18=Cherokee 4 Dr.(1981-83)
77=Cherokee 4WD-2 Dr.(1984-86)
78=Cherokee 4WD-4 Dr.(1984-86)
85=CJ-5 (1981-83)
86=CJ-6(1981)
87=CJ-7(1981-86)
88=CJ-8, Scrambler(1981-86)
64=Comanche 2WD-6 Ft. Box(1986)
66=Comanche 2WD-7 Ft. Box(1986)
63=Comanche 4WD-6 Ft. Box(1986)
65=Comanche 4WD-7 Ft. Box(1986)
15=Grand Wagoneer 4 Dr.(1984-86)
25=J-10 Truck 7 Ft. Box(1981-84)
26=J10 Truck 8 Ft. Box(1981-86)
27=J-20 Truck 8 Ft. Box(1981-86)
15=Wagoneer 4 Dr.(1981-83)
75=Wagoneer 4WD-4 Dr.(1984-86)

BODY
CJ=CJ-5, CJ-6, CJ-7, CJ-8, Scrambler(1981-86)
MJ=Comanche Pickup(1986)

STYLES
SJ=Wagoneer(1981-83), Grand Wagoneer(1984-86), Cherokee(1981-83), J-10, J-20(1981-86)
XJ=Wagoneer(1984-86), Cherokee(1984-86)

AR = Use as Required - = Non Illustrated Part P.A.R. = Paint as Required

« RETURN TO GROUP INDEX

WIRING--ENGINE COMPARTMENT SJ CHEROKEE, SJ WAGONEER, J10, J20
Figure 8-1000

81J08 10000

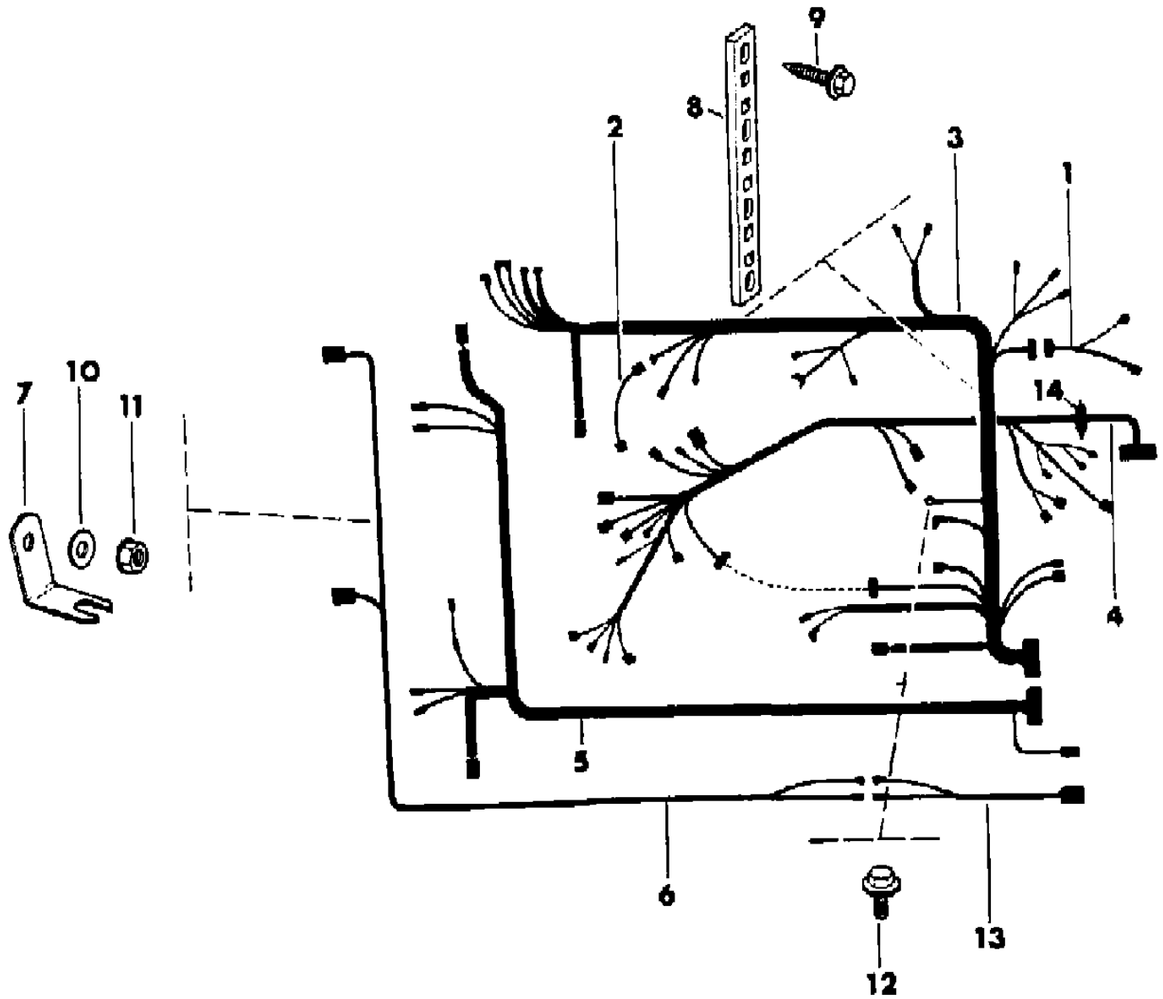

ITEM	PART NUMBER	QTY	BODY	MODEL	DESCRIPTION
1					WIRING, Transmission
					1981-85
	J575 8251	1			w/AM219 or AM229 Transfer Case
	J576 2381	1			w/AM208 Transfer Case
					1986
	5600 2030	1			w/AM228 Transfer Case
	5600 2230	1			w/AM208 Transfer Case
2					WIRING, Alternator
	J576 8282	1			Six Cylinder
3					WIRING, Engine
					Six Cylinder
					1981
	J575 8011	1			49 State
	J575 8733	1			Calif.
	J576 1225	1			1982
	J576 2689	1			1983
	J576 4148	1			1984-85
	5600 1712	1			1986
					Economic Commission of Europe
	J575 8584	1			1981-82
	J576 2691	1			1983
					Australian Design Rule
	J575 8584	1			1981-82
	J576 2691	1			1983
					Canada
	J575 8584	1			1981-82
					Non-Registered Markets
	J575 8676	1			1981-82
	J576 2691	1			1983
					Right Hand Drive
	J805 1413	1			1982-83
					EXPORT
	J576 4149	1			1984-86
					Eight Cylinder
	J575 8012	1			1981-82
	J575 4037	1			1983
	J576 5312	1			1984-85
	5600 1713	1			1986
	J805 0650	1			Right Hand Drive

MODEL CODES

16=Cherokee 2 Dr.(1981-83)
17=Cherokee 2 Dr.(1981-83)
73=Cherokee 2WD-2 Dr.(1984-86)
74=Cherokee 2WD-4 Dr.(1984-86)
18=Cherokee 4 Dr.(1981-83)
77=Cherokee 4WD-2 Dr.(1984-86)
78=Cherokee 4WD-4 Dr.(1984-86)
85=CJ-5 (1981-83)
86=CJ-6(1981)
87=CJ-7(1981-86)
88=CJ-8, Scrambler(1981-86)
64=Comanche 2WD-6 Ft. Box(1986)
66=Comanche 2WD-7 Ft. Box(1986)
63=Comanche 4WD-6 Ft. Box(1986)
65=Comanche 4WD-7 Ft. Box(1986)
15=Grand Wagoneer 4 Dr.(1984-86)
25=J-10 Truck 7 Ft. Box(1981-84)
26=J10 Truck 8 Ft. Box(1981-86)
27=J-20 Truck 8 Ft. Box(1981-86)
15=Wagoneer 4 Dr.(1981-83)
75=Wagoneer 4WD-4 Dr.(1984-86)

BODY
CJ=CJ-5, CJ-6, CJ-7, CJ-8, Scrambler(1981-86)
MJ=Comanche Pickup(1986)

STYLES
SJ=Wagoneer(1981-83), Grand Wagoneer(1984-86), Cherokee(1981-83), J-10, J-20(1981-86)
XJ=Wagoneer(1984-86), Cherokee(1984-86)

AR = Use as Required - = Non Illustrated Part P.A.R. = Paint as Required

WIRING--ENGINE COMPARTMENT SJ CHEROKEE, SJ WAGONEER, J10, J20
Figure 8-1000

81J08 10000

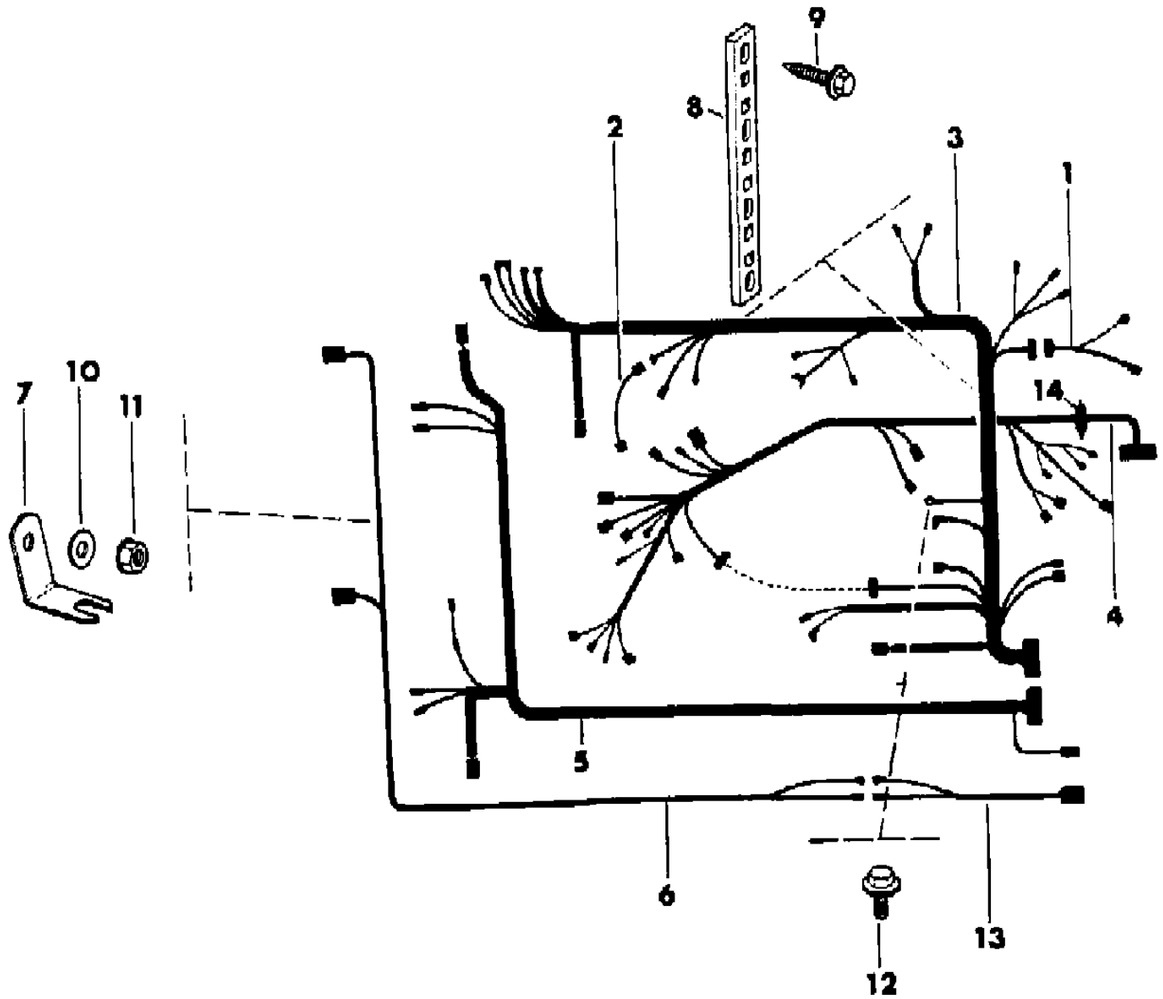

ITEM	PART NUMBER	QTY	BODY	MODEL	DESCRIPTION
4					WIRING, Emission
					Six Cylinder
	J576 2679	1			1983
	J576 4233	1			1984-86
5					WIRING, Headlamp
					1981
	J575 8874	1			w/Fog Lights
	J575 8585	1			w/o Fog Lights
	J576 1232	1			1982-85
	5600 1709	1			1986
					Economic Commission of Europe
	J575 8223	1			1981
	J536 3712	1			1982-85
	J805 1262	1			Right Hand Drive
6					WIRING, Fog Lamp
	J575 6769	1			w/o Relay
	J575 8253	1			w/Relay
7	J575 2416	1			SUPPORT
8	J536 1473	1			PLATE
9	J942 1073	4			SCREW
10	J012 0391	1			WASHER
11	J420 0325	1			NUT
12	J400 4652	1			SCREW, Ground
13					WIRING, Fog Lamp
	J575 6145	1			w/o Relay
	J576 1763	1			w/Relay

MODEL CODES

16=Cherokee 2 Dr.(1981-83)	78=Cherokee 4WD-4 Dr.(1984-86)	64=Comanche 2WD-6 Ft. Box(1986)	25=J-10 Truck 7 Ft. Box(1981-84)
17=Cherokee 2 Dr.(1981-83)	85=CJ-5 (1981-83)	66=Comanche 2WD-7 Ft. Box(1986)	26=J10 Truck 8 Ft. Box(1981-86)
73=Cherokee 2WD-2 Dr.(1984-86)	86=CJ-6(1981)	63=Comanche 4WD-6 Ft. Box(1986)	27=J-20 Truck 8 Ft. Box(1981-86)
74=Cherokee 2WD-4 Dr.(1984-86)	87=CJ-7(1981-86)	65=Comanche 4WD-7 Ft. Box(1986)	15=Wagoneer 4 Dr.(1981-83)
18=Cherokee 4 Dr.(1981-83)	88=CJ-8, Scrambler(1981-86)	15=Grand Wagoneer 4 Dr.(1984-86)	75=Wagoneer 4WD-4 Dr.(1984-86)
77=Cherokee 4WD-2 Dr.(1984-86)			

BODY
CJ=CJ-5, CJ-6, CJ-7, CJ-8, Scrambler(1981-86)
MJ=Comanche Pickup(1986)

STYLES
SJ=Wagoneer(1981-83), Grand Wagoneer(1984-86), Cherokee(1981-83), J-10, J-20(1981-86)
XJ=Wagoneer(1984-86), Cherokee(1984-86)

AR = Use as Required - = Non Illustrated Part P.A.R. = Paint as Required

WIRING--INSTRUMENT PANEL SJ CHEROKEE, SJ WAGONEER, J10, J20
Figure 8-1010

81J08 10100

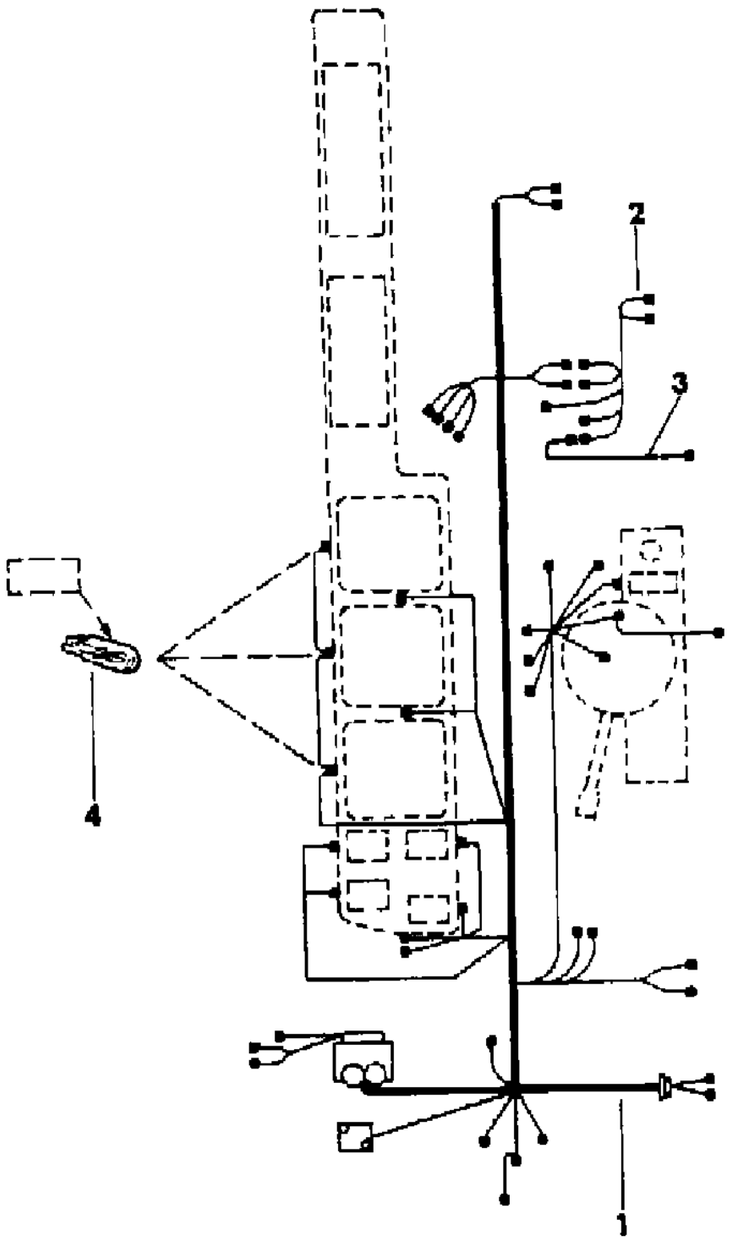

ITEM	PART NUMBER	QTY	BODY	MODEL	DESCRIPTION
1					WIRING, Instrument Panel
					1981
	J575 8876	1		15,16,1	w/Fog Lights
	J575 7096	1		15,16,1	w/o Fog Lights
	J575 8875	1		25,26,2	
					1982
	J576 1227	1			w/Electric Windows
	J576 1226	1			w/o Electric Windows
					1983
	J576 3683	1			w/Electric Windows
	J576 3684	1			w/o Electric Windows
					1984-85
	J576 4237	1			w/Electric Windows
	J576 4235	1			w/Electric Windows
					1986
	5600 1706	1		15	
	5600 1707	1		26,27	
					Economic Commission of Europe
	J575 8877	1			1981
	J576 1228	1			1982
	J576 3703	1			1983
	J576 4236	1			1984-86
	J805 1264	1			Right Hand Drive
2					WIRING, Heater
					w/Factory A/C
	J546 9891	1			1981-82
	J576 3561	1			1983-85
	5600 2024	1			1986
					w/American A/C
	J812 1886	1			1981-82
	8351 0199	1			1983-85
					w/o A/C
	J546 9891	1			1981-82
	J576 3561	1			1983-85
	5600 2023	1			1986
3	5600 2712	1			WIRING, Emission Timer
4	J941 7561	3			BULB, 161

MODEL CODES

16=Cherokee 2 Dr.(1981-83)
17=Cherokee 2 Dr.(1981-83)
73=Cherokee 2WD-2 Dr.(1984-86)
74=Cherokee 2WD-4 Dr.(1984-86)
18=Cherokee 4 Dr.(1981-83)
77=Cherokee 4WD-2 Dr.(1984-86)
78=Cherokee 4WD-4 Dr.(1984-86)
85=CJ-5 (1981-83)
86=CJ-6(1981)
87=CJ-7(1981-86)
88=CJ-8, Scrambler(1981-86)
64=Comanche 2WD-6 Ft. Box(1986)
66=Comanche 2WD-7 Ft. Box(1986)
63=Comanche 4WD-6 Ft. Box(1986)
65=Comanche 4WD-7 Ft. Box(1986)
15=Grand Wagoneer 4 Dr.(1984-86)
25=J-10 Truck 7 Ft. Box(1981-84)
26=J10 Truck 8 Ft. Box(1981-86)
27=J-20 Truck 8 Ft. Box(1981-86)
15=Wagoneer 4 Dr.(1981-83)
75=Wagoneer 4WD-4 Dr.(1984-86)

BODY

CJ=CJ-5, CJ-6, CJ-7, CJ-8, Scrambler(1981-86)
MJ=Comanche Pickup(1986)

STYLES

SJ=Wagoneer(1981-83), Grand Wagoneer(1984-86), Cherokee(1981-83), J-10, J-20(1981-86)
XJ=Wagoneer(1984-86), Cherokee(1984-86)

AR = Use as Required - = Non Illustrated Part P.A.R. = Paint as Required

« RETURN TO GROUP INDEX

WIRING--BODY SJ CHEROKEE, SJ WAGONEER
Figure 8-1020

81J08 10200

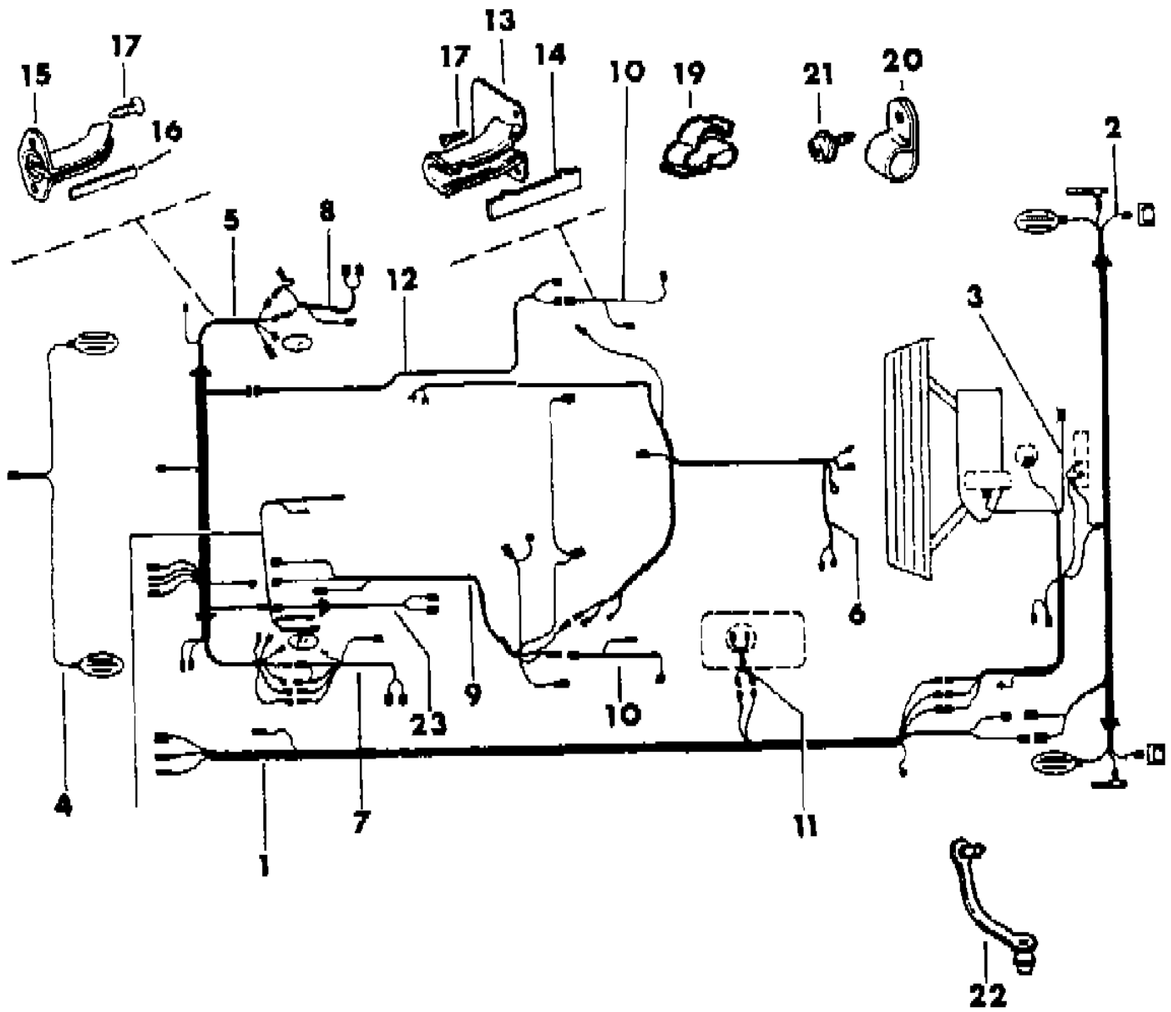

ITEM	PART NUMBER	QTY	BODY	MODEL	DESCRIPTION
1					WIRING, Body
	J575 8378	1			1981
	J576 1223	1			1982-85
	5600 2021	1			1986
	J536 3712	1			Economic Commission of Europe
	J805 1579	1			Right Hand Drive
	J575 8379	1			EXPORT
2					WIRING, Rear Cross
	J575 1958	1			1981
	J576 1221	1			1982-85
	5600 2032	1			1986
	J575 2765	1			EXPORT
3					WIRING, Tailgate
	J575 2858	1			1981
	J576 1229	1			1982-86
	J575 1230	1			Economic Commission of Europe
	J575 2767	1			EXPORT
4					WIRING, Speaker
	J575 1953	1			1981-85
	5600 2029	1			1986
	J575 7404	1			w/Power Amplifier Switch No. 3236136
	J575 8895	1			w/Power Amplifier Switch No. 3239758
5					WIRING, Front Cross
					w/Electric Windows
	J575 8006	1			1981
	J576 1346	1			1982-83
	J576 4660	1			1984-85
	5600 2027	1			1986
					w/o Electric Windows
	J575 8007	1			1981
	J576 1351	1			1982-83
	J576 4659	1			1984-85
	5600 2028	1			1986
6					WIRING, Dome Lamp
	J575 8655				Round Lamp
	J575 7098	1			Rectangular Lamp
7					WIRING, Door
					w/Electric Windows
					1981

MODEL CODES

16=Cherokee 2 Dr.(1981-83)	78=Cherokee 4WD-4 Dr.(1984-86)	64=Comanche 2WD-6 Ft. Box(1986)	25=J-10 Truck 7 Ft. Box(1981-84)
17=Cherokee 2 Dr.(1981-83)	85=CJ-5 (1981-83)	66=Comanche 2WD-7 Ft. Box(1986)	26=J10 Truck 8 Ft. Box(1981-86)
73=Cherokee 2WD-2 Dr.(1984-86)	86=CJ-6(1981)	63=Comanche 4WD-6 Ft. Box(1986)	27=J-20 Truck 8 Ft. Box(1981-86)
74=Cherokee 2WD-4 Dr.(1984-86)	87=CJ-7(1981-86)	65=Comanche 4WD-7 Ft. Box(1986)	15=Wagoneer 4 Dr.(1981-83)
18=Cherokee 4 Dr.(1981-83)	88=CJ-8, Scrambler(1981-86)	15=Grand Wagoneer 4 Dr.(1984-86)	75=Wagoneer 4WD-4 Dr.(1984-86)
77=Cherokee 4WD-2 Dr.(1984-86)			

BODY
CJ=CJ-5, CJ-6, CJ-7, CJ-8, Scrambler(1981-86)
MJ=Comanche Pickup(1986)

STYLES
SJ=Wagoneer(1981-83), Grand Wagoneer(1984-86), Cherokee(1981-83), J-10, J-20(1981-86)
XJ=Wagoneer(1984-86), Cherokee(1984-86)

AR = Use as Required - = Non Illustrated Part P.A.R. = Paint as Required

81J08 10200

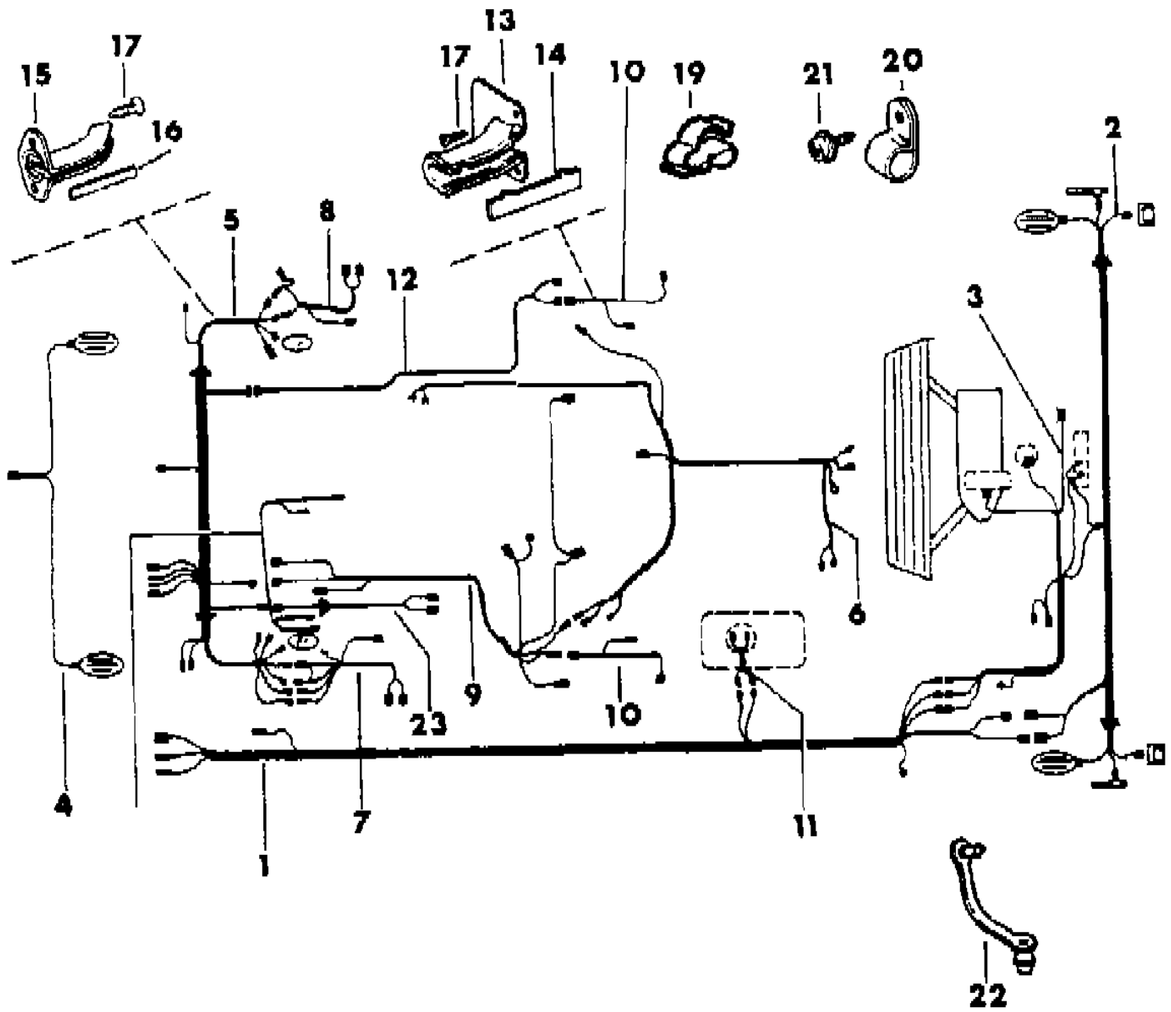

ITEM	PART NUMBER	QTY	BODY	MODEL	DESCRIPTION
	J575 1773	1		15,18	
	J575 1769	1		16,17	
					1982-86
	J575 1347	1		15,18	
	J575 1350	1		16,17	
					w/o Electric Windows
	J575 1802	1			1981
	J576 1352	1			1982-86
8					WIRING, Door
					w/Electric Windows
	J575 1772	1			1981
	J576 1348	1			1982-86
					w/o Electric Windows
	J575 1803	1			1981
	J576 1353	1			1982-86
9					WIRING, Seat Belt
	J575 8008	1			w/Electric Windows
	J575 8009	1			w/o Electric Windows
10					WIRING, Door
					w/Electric Windows
	J575 1771	2			1981
	J576 1349	2			1982-86
	J575 8062	2			w/o Electric Windows
11	J575 2302	1			WIRING, Fuel Tank
12	J575 8063	1			WIRING, Door
13					RETAINER
	J575 0359	2			1981-83
	J576 2322	2			1984-86
14					CAP
	J575 0358	2			1981-83
	J576 2321	2			1984-86
15					RETAINER
	J575 0365	2			1981
	J575 6873	2			1982-86
16					CAP
	J575 0364	2			1981
	J575 6933	2			1982-86
17	J812 0054	AR			SCREW
18	J576 4658	1			WIRING, Courtesy Lamp

MODEL CODES
16=Cherokee 2 Dr.(1981-83)
17=Cherokee 2 Dr.(1981-83)
73=Cherokee 2WD-2 Dr.(1984-86)
74=Cherokee 2WD-4 Dr.(1984-86)
18=Cherokee 4 Dr.(1981-83)
77=Cherokee 4WD-2 Dr.(1984-86)
78=Cherokee 4WD-4 Dr.(1984-86)
85=CJ-5 (1981-83)
86=CJ-6(1981)
87=CJ-7(1981-86)
88=CJ-8, Scrambler(1981-86)
64=Comanche 2WD-6 Ft. Box(1986)
66=Comanche 2WD-7 Ft. Box(1986)
63=Comanche 4WD-6 Ft. Box(1986)
65=Comanche 4WD-7 Ft. Box(1986)
15=Grand Wagoneer 4 Dr.(1984-86)
25=J-10 Truck 7 Ft. Box(1981-84)
26=J10 Truck 8 Ft. Box(1981-86)
27=J-20 Truck 8 Ft. Box(1981-86)
15=Wagoneer 4 Dr.(1981-83)
75=Wagoneer 4WD-4 Dr.(1984-86)

BODY
CJ=CJ-5, CJ-6, CJ-7, CJ-8, Scrambler(1981-86)
MJ=Comanche Pickup(1986)

STYLES
SJ=Wagoneer(1981-83), Grand Wagoneer(1984-86), Cherokee(1981-83), J-10, J-20(1981-86)
XJ=Wagoneer(1984-86), Cherokee(1984-86)

AR = Use as Required - = Non Illustrated Part P.A.R. = Paint as Required

81J08 10200

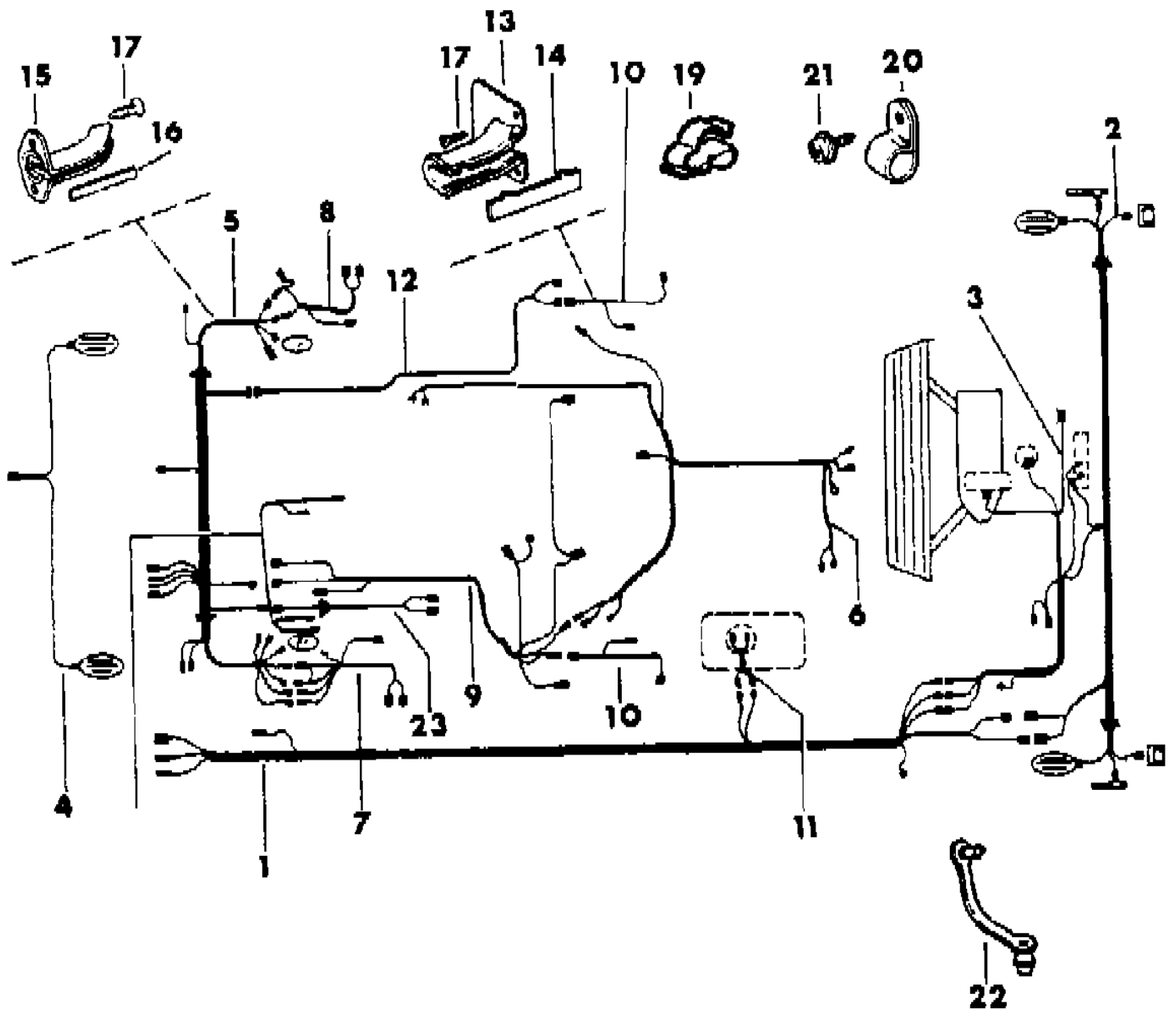

ITEM	PART NUMBER	QTY	BODY	MODEL	DESCRIPTION
19	3420 2362	4			CLIP
20	3420 1904	3			CLIP
21	J097 4764	3			SCREW
22	J400 1712	3			CLIP
23					WIRING, Door Switch
	J545 6014	1		15,18	
	J545 6013	1		16,17	
	J545 6013	1		25,26,2	

MODEL CODES

16=Cherokee 2 Dr.(1981-83)
17=Cherokee 2 Dr.(1981-83)
73=Cherokee 2WD-2 Dr.(1984-86)
74=Cherokee 2WD-4 Dr.(1984-86)
18=Cherokee 4 Dr.(1981-83)
77=Cherokee 4WD-2 Dr.(1984-86)
78=Cherokee 4WD-4 Dr.(1984-86)
85=CJ-5 (1981-83)
86=CJ-6(1981)
87=CJ-7(1981-86)
88=CJ-8, Scrambler(1981-86)
64=Comanche 2WD-6 Ft. Box(1986)
66=Comanche 2WD-7 Ft. Box(1986)
63=Comanche 4WD-6 Ft. Box(1986)
65=Comanche 4WD-7 Ft. Box(1986)
15=Grand Wagoneer 4 Dr.(1984-86)
25=J-10 Truck 7 Ft. Box(1981-84)
26=J10 Truck 8 Ft. Box(1981-86)
27=J-20 Truck 8 Ft. Box(1981-86)
15=Wagoneer 4 Dr.(1981-83)
75=Wagoneer 4WD-4 Dr.(1984-86)

BODY
CJ=CJ-5, CJ-6, CJ-7, CJ-8, Scrambler(1981-86)
MJ=Comanche Pickup(1986)

STYLES
SJ=Wagoneer(1981-83), Grand Wagoneer(1984-86), Cherokee(1981-83), J-10, J-20(1981-86)
XJ=Wagoneer(1984-86), Cherokee(1984-86)

AR = Use as Required - = Non Illustrated Part P.A.R. = Paint as Required

WIRING--BODY J10, J20
Figure 8-1030

81J08 10300

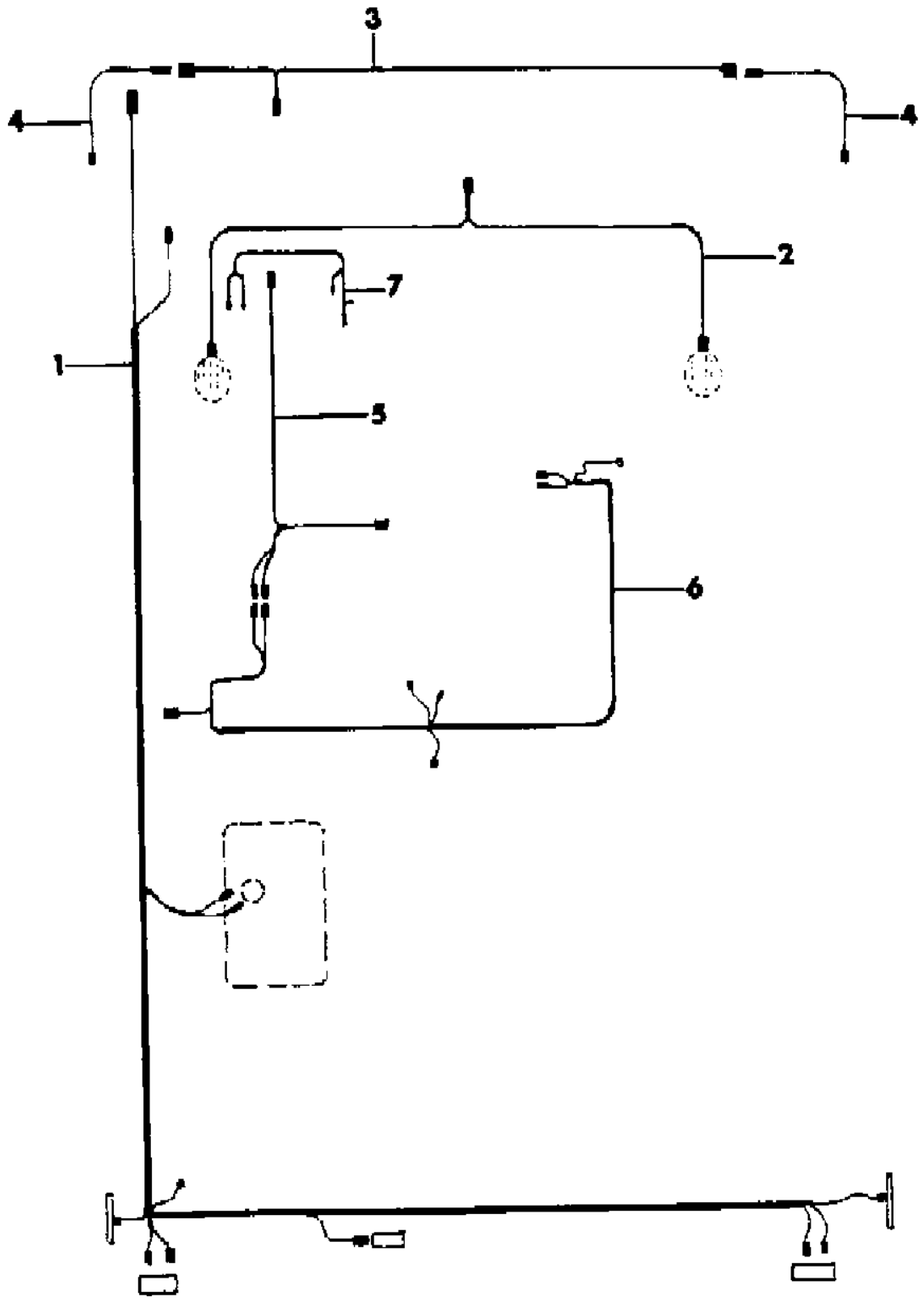

ITEM	PART NUMBER	QTY	BODY	MODEL	DESCRIPTION
1					WIRING, Body
					1981-85
	J575 8381	1			Sportside
	J575 8380	1			Townside
	5600 2022	1			1986
2					WIRING, Speaker
	J575 1953	1			1981-85
	5600 2029	1			1986
	J575 1956	1			w/Power Amplifier Switch No. 3236136
	J575 8894	1			w/Power Amplifier Switch No. 3239758
3	J545 0120	1			WIRING, Door Switch
4	J545 6013	1			WIRING, Door Switch
5					WIRING, Seat Belt
	J575 8009	1			1981-85
	J575 8010	1			1986
6					WIRING, Dome Lamp
	J575 7092	1			Round Lamp
	J575 8227	1			Retangular Lamp
7	J576 4658	1			WIRING, Courtesy Lamp

MODEL CODES

16=Cherokee 2 Dr.(1981-83)	78=Cherokee 4WD-4 Dr.(1984-86)	64=Comanche 2WD-6 Ft. Box(1986)	25=J-10 Truck 7 Ft. Box(1981-84)
17=Cherokee 2 Dr.(1981-83)	85=CJ-5 (1981-83)	66=Comanche 2WD-7 Ft. Box(1986)	26=J10 Truck 8 Ft. Box(1981-86)
73=Cherokee 2WD-2 Dr.(1984-86)	86=CJ-6(1981)	63=Comanche 4WD-6 Ft. Box(1986)	27=J-20 Truck 8 Ft. Box(1981-86)
74=Cherokee 2WD-4 Dr.(1984-86)	87=CJ-7(1981-86)	65=Comanche 4WD-7 Ft. Box(1986)	15=Wagoneer 4 Dr.(1981-83)
18=Cherokee 4 Dr.(1981-83)	88=CJ-8, Scrambler(1981-86)	15=Grand Wagoneer 4 Dr.(1984-86)	75=Wagoneer 4WD-4 Dr.(1984-86)
77=Cherokee 4WD-2 Dr.(1984-86)			

BODY
CJ=CJ-5, CJ-6, CJ-7, CJ-8, Scrambler(1981-86)
MJ=Comanche Pickup(1986)

STYLES
SJ=Wagoneer(1981-83), Grand Wagoneer(1984-86), Cherokee(1981-83), J-10, J-20(1981-86)
XJ=Wagoneer(1984-86), Cherokee(1984-86)

AR = Use as Required - = Non Illustrated Part P.A.R. = Paint as Required

« RETURN TO GROUP INDEX

SYSTEM SENTRY XJ CHEROKEE, XJ WAGONEER 1985
Figure 8-1040

81J08 10400

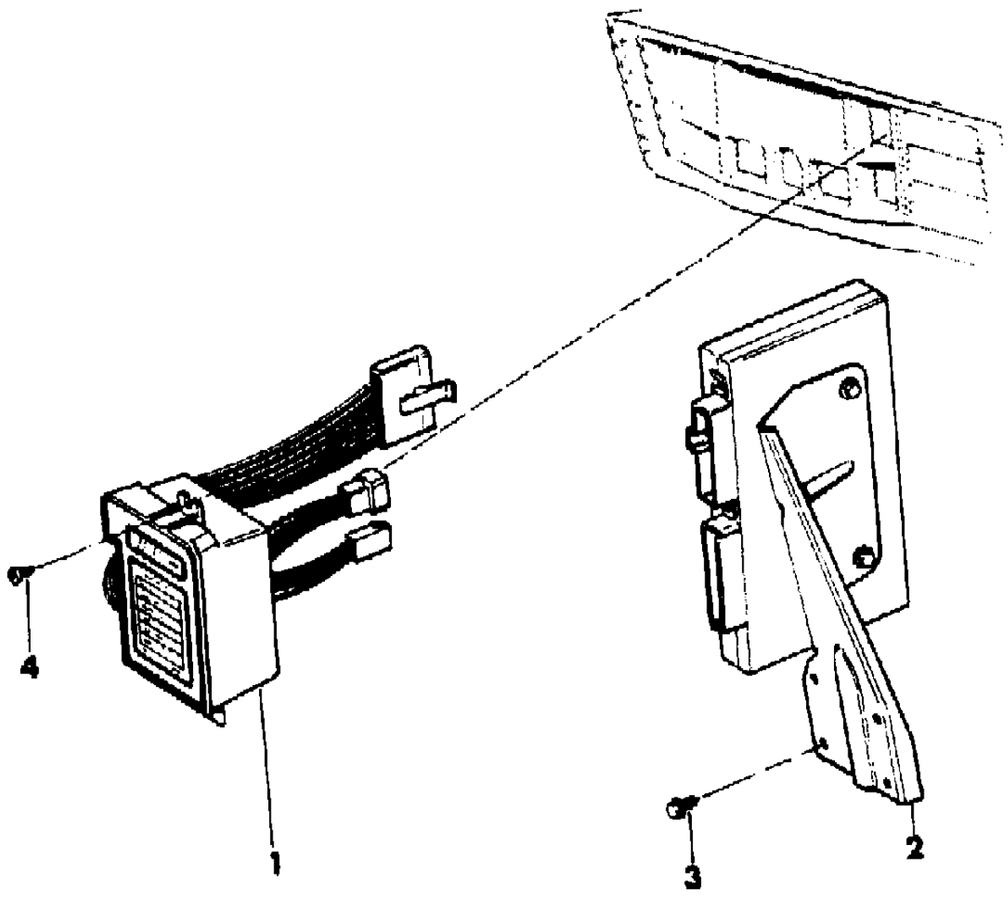

ITEM	PART NUMBER	QTY	BODY	MODEL	DESCRIPTION
1	5600 0392	1			MODULE, System Sentry
2	5600 0716	1			MODULE, System Sentry
3	3420 1489	4			SCREW
4	1150 0055	1			SCREW

MODEL CODES

16=Cherokee 2 Dr.(1981-83)
17=Cherokee 2 Dr.(1981-83)
73=Cherokee 2WD-2 Dr.(1984-86)
74=Cherokee 2WD-4 Dr.(1984-86)
18=Cherokee 4 Dr.(1981-83)
77=Cherokee 4WD-2 Dr.(1984-86)
78=Cherokee 4WD-4 Dr.(1984-86)
85=CJ-5 (1981-83)
86=CJ-6(1981)
87=CJ-7(1981-86)
88=CJ-8, Scrambler(1981-86)
64=Comanche 2WD-6 Ft. Box(1986)
66=Comanche 2WD-7 Ft. Box(1986)
63=Comanche 4WD-6 Ft. Box(1986)
65=Comanche 4WD-7 Ft. Box(1986)
15=Grand Wagoneer 4 Dr.(1984-86)
25=J-10 Truck 7 Ft. Box(1981-84)
26=J10 Truck 8 Ft. Box(1981-86)
27=J-20 Truck 8 Ft. Box(1981-86)
15=Wagoneer 4 Dr.(1981-83)
75=Wagoneer 4WD-4 Dr.(1984-86)

BODY
CJ=CJ-5, CJ-6, CJ-7, CJ-8, Scrambler(1981-86)
MJ=Comanche Pickup(1986)

STYLES
SJ=Wagoneer(1981-83), Grand Wagoneer(1984-86), Cherokee(1981-83), J-10, J-20(1981-86)
XJ=Wagoneer(1984-86), Cherokee(1984-86)

AR = Use as Required - = Non Illustrated Part P.A.R. = Paint as Required

« RETURN TO GROUP INDEX

ILLUSTRATION NOT AVAILABLE AT TIME OF PUBLICATION

GROUP 8A - ELECTRICAL - INSTRUMENT PANEL AND CONSOLES

ILLUSTRATION TITLE	GROUP-FIG. NO.
CJ-5,6,7,8 SCRAMBLER	
INSTRUMENT PANEL PAD AND BEZELS CJ-5,6,7,8, SCRAMBLER	Fig. 8A-100
INSTRUMENT PANEL SWITCHES CJ-5,6,7,8 SCRAMBLER	Fig. 8A-200
FUSE PANEL PANEL CJ-5,6,7,8 SCRAMBLER	Fig. 8A-300
INSTRUMENT PANEL CLUSTER CJ-5,6,7,8 SCRAMBLER	Fig. 8A-400
INSTRUMENT PANEL TACHOMETER, CLOCK AND GAUGES CJ-5,6,7,8 SCRAMBLER	Fig. 8A-500
ANTENNA, SPEAKERS AND RADIO KNOBS CJ-5,6,7,8 SCRAMBLER	Fig. 8A-600
CONSOLE, FLOOR CJ-5,6,7,8 SCRAMBLER	Fig. 8A-700
CLIPS CJ-5,6,7,8 SCRAMBLER	Fig. 8A-800
RELAYS CJ-5,6,7,8 SCRAMBLER	Fig. 8A-900
CONNECTORS CJ-5,6,7,8 SCRAMBLER	Fig. 8A-1000
XJ CHEROKEE, XJ WAGONEER, COMANCHE	
INSTRUMENT PANEL PANEL AND BEZELS XJ CHEROKEE, XJ WAGONEER, COMANCHE	Fig. 8A-1100
INSTRUMENT PANEL SWITCHES AND CIGAR LIGHTER XJ CHEROKEE, XJ WAGONEER, COMANCHE	Fig. 8A-1200
INSTRUMENT PANEL, WITH GUAGES WITHOUT TACHOMETER TYPE 1 XJ CHEROKEE, XJ WAGONEER, COMANCHE	Fig. 8A-1300
INSTRUMENT PANEL, WITH GAUGES WITHOUT TACHOMETER TYPE 2 XJ CHEROKEE, XJ WAGONEER, COMANCHE	Fig. 8A-1400
INSTRUMENT CLUSTER WITH WARNING LAMPS TYPE 1 XJ CHEROKEE, XJ WAGONEER, COMANCHE	Fig. 8A-1500
INSTRUMENT CLUSTER WITH WARNING LAMPS TYPE 2 XJ CHEROKEE, XJ WAGONEER, COMANCHE	Fig. 8A-1600
INSTRUMENT CLUSTER WITH GAUGES, TACHOMETER TYPE 1, EXCEPT LIMITED XJ CHEROKEE, XJ WAGONEER, COMANCHE	Fig. 8A-1700
INSTRUMENT CLUSTER WITH GAUGES, TACHOMETER TYPE 2 XJ CHEROKEE, XJ WAGONEER, COMANCHE	Fig. 8A-1800
INSTRUMENT CLUSTER WITH GAUGES, TACHOMETER, LIMITED XJ CHEROKEE	Fig. 8A-1900
FUSE PANEL XJ CHEROKEE, XJ WAGONEER, COMANCHE	Fig. 8A-2000
SPEAKERS AND RADIO KNOBS TWO SPEAKER SYSTEM XJ CHEROKEE, XJ WAGONEER, COMANCHE	Fig. 8A-2100
SPEAKERS AND RADIO KNOBS FOUR OR SIX SPEAKER SYSTEMS XJ CHEROKEE, XJ WAGONEER, COMANCHE	Fig. 8A-2200
ANTENNA XJ CHEROKEE, XJ WAGONEER, COMANCHE	Fig. 8A-2300
SHIFT BEZELS XJ CHEROKEE, XJ WAGONEER, COMANCHE	Fig. 8A-2400
CONSOLE XJ CHEROKEE, XJ WAGONEER, COMANCHE	Fig. 8A-2500
SJ CHEROKEE, SJ WAGONEER, J10, J20	
INSTRUMENT PANEL, 1981-85 PAD AND BEZELS SJ CHEROKEE, SJ WAGONEER, J10, J20	Fig. 8A-2600
INSTRUMENT PANEL, 1986 PAD AND BEZELS SJ WAGONEER, J10, J20	Fig. 8A-2700
INSTRUMENT PANEL, 1981-85 SWITCHES SJ CHEROKEE, SJ WAGONEER, J10, J20	Fig. 8A-2800

ILLUSTRATION TITLE **GROUP-FIG. NO.**

SJ CHEROKEE, SJ WAGONEER, J10, J20 (Continued)

INSTRUMENT PANEL, 1981-85 SWITCHES SJ CHEROKEE, SJ WAGONEER, J10, J20 . . . . . Fig. 8A-2800
INSTRUMENT PANEL, 1986 SWITCHES SJ WAGONEER, J10, J20 . . . . . Fig. 8A-2900
FUSE PANEL SJ CHEROKEE, SJ WAGONEER, J10, J20 . . . . . Fig. 8A-3000
INSTRUMENT CLUSTER, 1981-85 SJ CHEROKEE, SJ WAGONEER, J10, J20 . . . . . Fig. 8A-3100
INSTRUMENT CLUSTER, 1986 SJ WAGONEER, J10, J20 . . . . . Fig. 8A-3200
SPEAKER AND RADIO KNOBS SJ CHEROKEE, SJ WAGONEER, J10, J20 . . . . . Fig. 8A-3300
POWER AMPLIFIER AND FADER CONTROL FOUR SPEAKER SYSTEM SJ CHEROKEE, SJ WAGONEER, J10, J20 . . . . . Fig. 8A-3400
ANTENNA SJ CHEROKEE, SJ WAGONEER, J10, J20 . . . . . Fig. 8A-3500
SWITCHES SJ CHEROKEE, SJ WAGONEER, J10, J20 . . . . . Fig. 8A-3600

INSTRUMENT PANEL PAD AND BEZELS CJ-5,6,7,8, SCRAMBLER
Figure 8A-100

81J 082 100

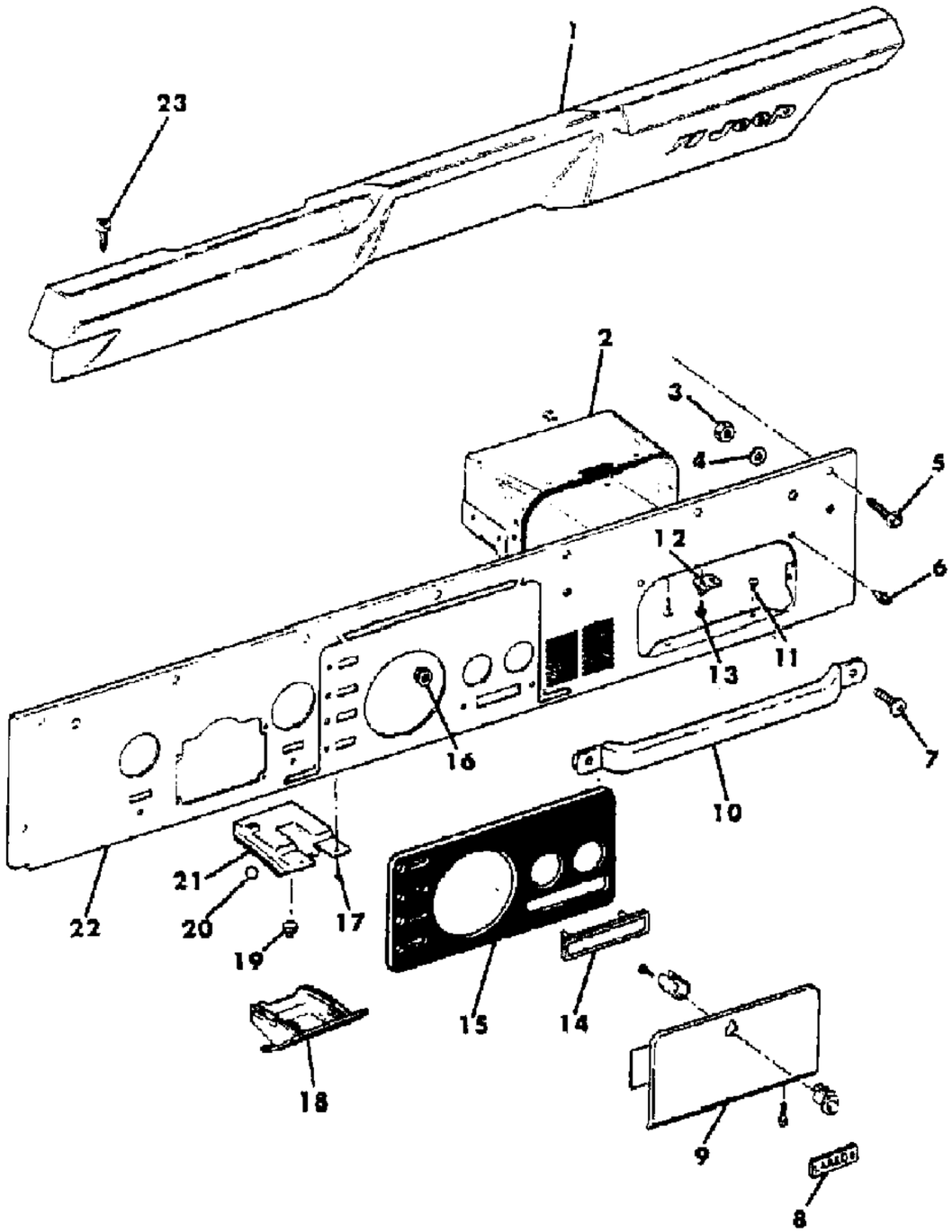

ITEM	PART NUMBER	QTY	BODY	MODEL	DESCRIPTION
1					PAD, Instrument Panel
	J576 0456	1			Without Movable Vent Window
	J576 0458	1			With Movable Vent Window
2	J575 2279	1			HOUSING, Glove Box
3	J027 1190	2			NUT
4	J066 4607	2			WASHER
5	J400 4991	12			SCREW
6	J066 4836	2			BUMPER
7	S045 1976	2			BOLT
8					NAMEPLATE
	J575 0835	1			Laredo
	J576 3560	1			30th Anniversary
9					DOOR, Glove Box
	J097 0053	1			With Latching Glove Box
	J576 4164	1			With Locking Glove Box
10					HANDLE, Assist
	J576 1402	1			Slate Blue
					Laredo
	J575 1221	1			Black
	J576 5358	1			Honey
	J575 5278	1			Nutmeg
	J068 9311				Without Laredo
11	J941 7333	2			SCREW
12					STRIKER, Glove Box Lock
	J095 7276	1			1981
	J576 1367	1			1982-83
	J576 1531	1			1983-86
13	J400 5520	2			SCREW
14	J546 2707	1			COVER
15					OVERLAY ***
	J546 2709	1			
	J575 5366	1			Right Hand Drive
16	J320 9575	2			NUT
17	J400 4426	2			SCREW
18					ASH TRAY
	J575 6763	1			Without Factory Installed Air Conditioning
	J364 9527	1			With Factory Installed Air Conditioning
19	J400 0081	1			PLUG
20					BALL

MODEL CODES

16=Cherokee 2 Dr.(1981-83)
17=Cherokee 2 Dr.(1981-83)
73=Cherokee 2WD-2 Dr.(1984-86)
74=Cherokee 2WD-4 Dr.(1984-86)
18=Cherokee 4 Dr.(1981-83)
77=Cherokee 4WD-2 Dr.(1984-86)
78=Cherokee 4WD-4 Dr.(1984-86)
85=CJ-5 (1981-83)
86=CJ-6(1981)
87=CJ-7(1981-86)
88=CJ-8, Scrambler(1981-86)
64=Comanche 2WD-6 Ft. Box(1986)
66=Comanche 2WD-7 Ft. Box(1986)
63=Comanche 4WD-6 Ft. Box(1986)
65=Comanche 4WD-7 Ft. Box(1986)
15=Grand Wagoneer 4 Dr.(1984-86)
25=J-10 Truck 7 Ft. Box(1981-84)
26=J10 Truck 8 Ft. Box(1981-86)
27=J-20 Truck 8 Ft. Box(1981-86)
15=Wagoneer 4 Dr.(1981-83)
75=Wagoneer 4WD-4 Dr.(1984-86)

BODY
CJ=CJ-5, CJ-6, CJ-7, CJ-8, Scrambler(1981-86)
MJ=Comanche Pickup(1986)

STYLES
SJ=Wagoneer(1981-83), Grand Wagoneer(1984-86), Cherokee(1981-83), J-10, J-20(1981-86)
XJ=Wagoneer(1984-86), Cherokee(1984-86)

AR = Use as Required - = Non Illustrated Part P.A.R. = Paint as Required

INSTRUMENT PANEL PAD AND BEZELS CJ-5,6,7,8, SCRAMBLER
Figure 8A-100

81J 082 100

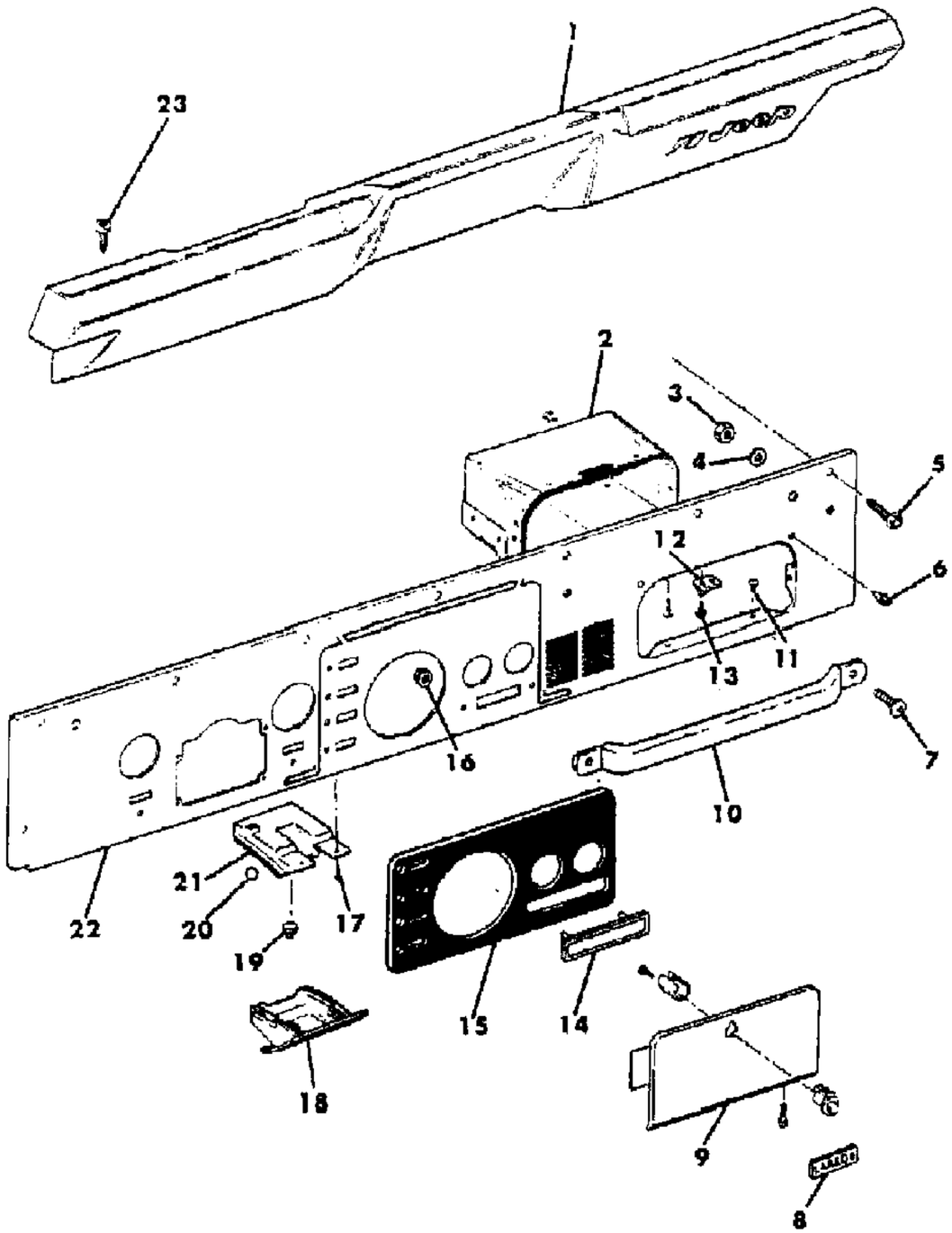

ITEM	PART NUMBER	QTY	BODY	MODEL	DESCRIPTION
	S014 7488	4			Without Factory Installed Air Conditioning
21	J363 1437	1			RETAINER
22					PANEL, Instrument
					With Movable Vent
	J575 2643	1			1981-83: Modification Required
	J575 2639	1			1981-83: Right Hand Drive
					Without Movable Vent
	J576 3630	1			1983-86
	J576 3677	1			1983-86: Right Hand Drive
23	J097 4764	8			SCREW

MODEL CODES
16=Cherokee 2 Dr.(1981-83)
17=Cherokee 2 Dr.(1981-83)
73=Cherokee 2WD-2 Dr.(1984-86)
74=Cherokee 2WD-4 Dr.(1984-86)
18=Cherokee 4 Dr.(1981-83)
77=Cherokee 4WD-2 Dr.(1984-86)
78=Cherokee 4WD-4 Dr.(1984-86)
85=CJ-5 (1981-83)
86=CJ-6(1981)
87=CJ-7(1981-86)
88=CJ-8, Scrambler(1981-86)
64=Comanche 2WD-6 Ft. Box(1986)
66=Comanche 2WD-7 Ft. Box(1986)
63=Comanche 4WD-6 Ft. Box(1986)
65=Comanche 4WD-7 Ft. Box(1986)
15=Grand Wagoneer 4 Dr.(1984-86)
25=J-10 Truck 7 Ft. Box(1981-84)
26=J10 Truck 8 Ft. Box(1981-86)
27=J-20 Truck 8 Ft. Box(1981-86)
15=Wagoneer 4 Dr.(1981-83)
75=Wagoneer 4WD-4 Dr.(1984-86)

BODY
CJ=CJ-5, CJ-6, CJ-7, CJ-8, Scrambler(1981-86)
MJ=Comanche Pickup(1986)

STYLES
SJ=Wagoneer(1981-83), Grand Wagoneer(1984-86), Cherokee(1981-83), J-10, J-20(1981-86)
XJ=Wagoneer(1984-86), Cherokee(1984-86)

AR = Use as Required - = Non Illustrated Part P.A.R. = Paint as Required

« RETURN TO GROUP INDEX

INSTRUMENT PANEL SWITCHES CJ-5,6,7,8 SCRAMBLER
Figure 8A-200

81J 082 200

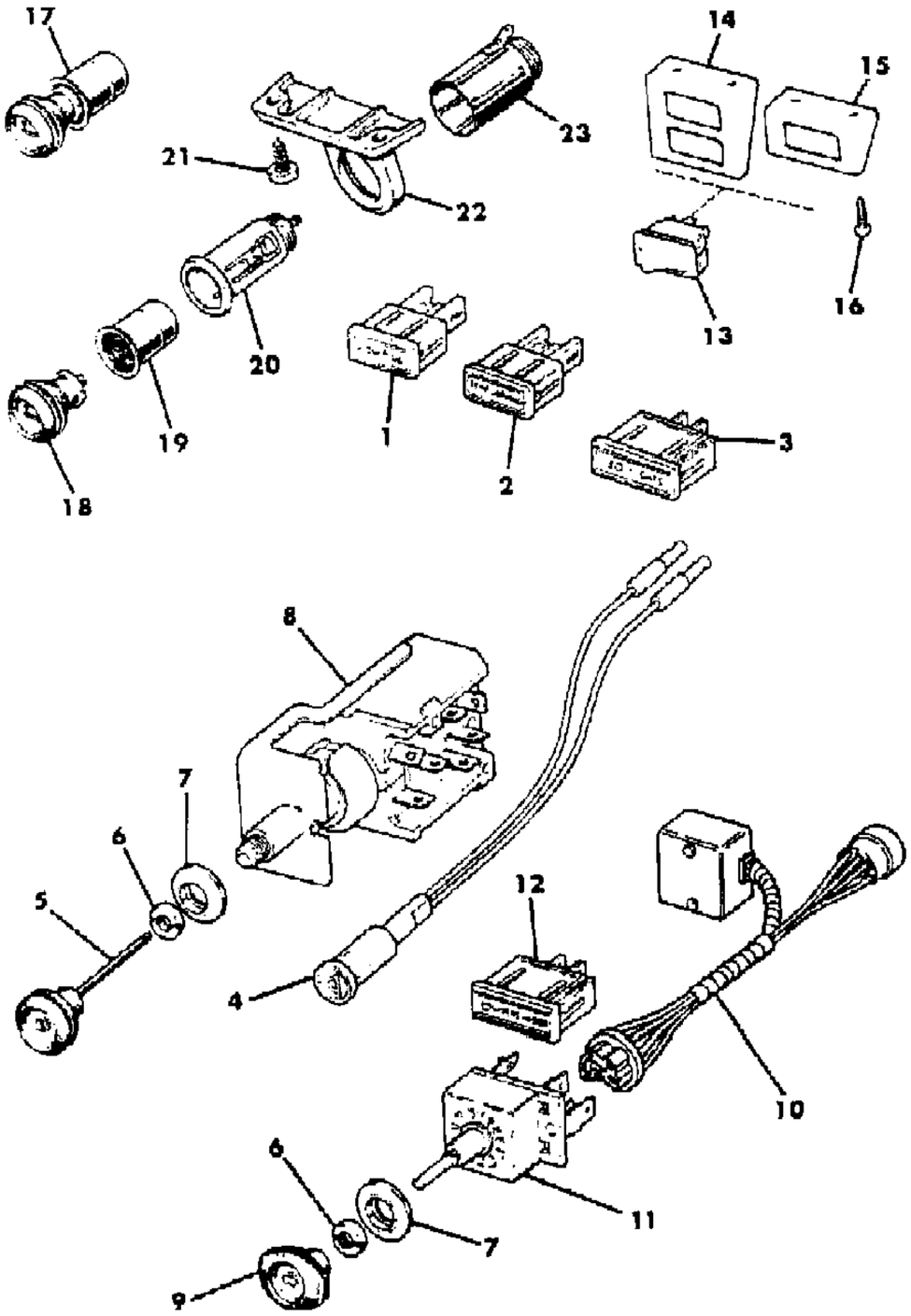

ITEM	PART NUMBER	QTY	BODY	MODEL	DESCRIPTION
1	J576 2406	1			LAMP, Glow Plug
2					LAMP
	J575 2016	1			Temperature
	J576 2405	1			Temperature, EXPORT
3					LAMP
	J575 2813	1			Lights
	J575 2815	1			Air
	J575 2817	1			Defroster
	J575 2818	1			Fan
	J575 1788	1			Emission Maintenence
	J575 1789	1			Carburetor Check
	J575 2250	1			Park Brake, EXPORT
	J575 2669	1			Exhaust Indicator, Japan
	J576 4769	1			Up-Shift
4	J575 7483	1			LAMP, Hazard Warning
5	J575 2810	1			KNOB
6	J400 0056	1			NUT
7	J098 7911	1			BEZEL
8	J575 1098	1			SWITCH
9					KNOB
	J576 4185	1			Right Hand Drive
	J545 9189	1			Left Hand Drive
10	J372 8007	1			GOVERNOR ***
11					SWITCH
					Without Intermittent Wipers
	J546 0089	1			1981-82
	J575 8687	1			1983-86
	J575 8904	1			With Intermittent Wipers, 1983-86
12	J575 2814	1			LAMP, Wiper Washer
13					SWITCH, Fog Lamp
	J575 6866	1			Front
	J576 1909	1			Rear
14	J576 1911	1			BRACKET
15	J575 6867	1			BRACKET
16					SCREW
	J812 0052	2			Without Factory AirConditioning
	J400 6630	2			With Factory Air Conditioning
17	J545 9235	1			LIGHTER, Cigar ***
18	J545 7866	1			KNOB

MODEL CODES

16=Cherokee 2 Dr.(1981-83)	78=Cherokee 4WD-4 Dr.(1984-86)	64=Comanche 2WD-6 Ft. Box(1986)	25=J-10 Truck 7 Ft. Box(1981-84)
17=Cherokee 2 Dr.(1981-83)	85=CJ-5 (1981-83)	66=Comanche 2WD-7 Ft. Box(1986)	26=J10 Truck 8 Ft. Box(1981-86)
73=Cherokee 2WD-2 Dr.(1984-86)	86=CJ-6(1981)	63=Comanche 4WD-6 Ft. Box(1986)	27=J-20 Truck 8 Ft. Box(1981-86)
74=Cherokee 2WD-4 Dr.(1984-86)	87=CJ-7(1981-86)	65=Comanche 4WD-7 Ft. Box(1986)	15=Wagoneer 4 Dr.(1981-83)
18=Cherokee 4 Dr.(1981-83)	88=CJ-8, Scrambler(1981-86)	15=Grand Wagoneer 4 Dr.(1984-86)	75=Wagoneer 4WD-4 Dr.(1984-86)
77=Cherokee 4WD-2 Dr.(1984-86)			

BODY
CJ=CJ-5, CJ-6, CJ-7, CJ-8, Scrambler(1981-86)
MJ=Comanche Pickup(1986)

STYLES
SJ=Wagoneer(1981-83), Grand Wagoneer(1984-86), Cherokee(1981-83), J-10, J-20(1981-86)
XJ=Wagoneer(1984-86), Cherokee(1984-86)

AR = Use as Required - = Non Illustrated Part P.A.R. = Paint as Required

INSTRUMENT PANEL SWITCHES CJ-5,6,7,8 SCRAMBLER
Figure 8A-200

81J 082 200

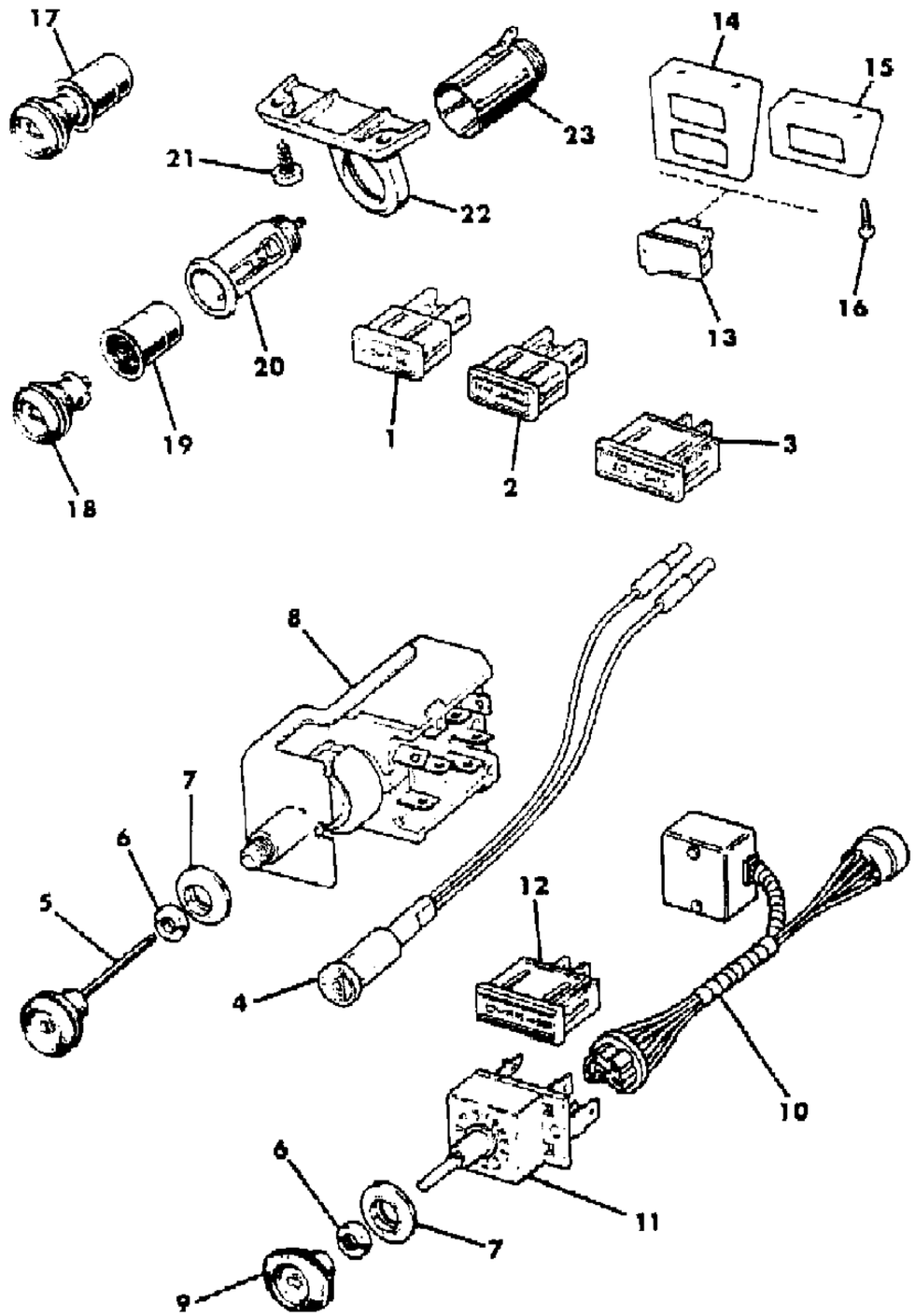

ITEM	PART NUMBER	QTY	BODY	MODEL	DESCRIPTION
19	J098 9665	1			ELEMENT
20	J545 9220	1			BASE
21	J400 4426	2			SCREW
22	J545 9213	1			BRACKET
23	J357 6049	1			HOUSING

MODEL CODES

16=Cherokee 2 Dr.(1981-83)
17=Cherokee 2 Dr.(1981-83)
73=Cherokee 2WD-2 Dr.(1984-86)
74=Cherokee 2WD-4 Dr.(1984-86)
18=Cherokee 4 Dr.(1981-83)
77=Cherokee 4WD-2 Dr.(1984-86)
78=Cherokee 4WD-4 Dr.(1984-86)
85=CJ-5 (1981-83)
86=CJ-6(1981)
87=CJ-7(1981-86)
88=CJ-8, Scrambler(1981-86)
64=Comanche 2WD-6 Ft. Box(1986)
66=Comanche 2WD-7 Ft. Box(1986)
63=Comanche 4WD-6 Ft. Box(1986)
65=Comanche 4WD-7 Ft. Box(1986)
15=Grand Wagoneer 4 Dr.(1984-86)
25=J-10 Truck 7 Ft. Box(1981-84)
26=J10 Truck 8 Ft. Box(1981-86)
27=J-20 Truck 8 Ft. Box(1981-86)
15=Wagoneer 4 Dr.(1981-83)
75=Wagoneer 4WD-4 Dr.(1984-86)

BODY
CJ=CJ-5, CJ-6, CJ-7, CJ-8, Scrambler(1981-86)
MJ=Comanche Pickup(1986)

STYLES
SJ=Wagoneer(1981-83), Grand Wagoneer(1984-86), Cherokee(1981-83), J-10, J-20(1981-86)
XJ=Wagoneer(1984-86), Cherokee(1984-86)

AR = Use as Required - = Non Illustrated Part P.A.R. = Paint as Required

« RETURN TO GROUP INDEX

FUSE PANEL PANEL CJ-5,6,7,8 SCRAMBLER
Figure 8A-300

81J 082 300

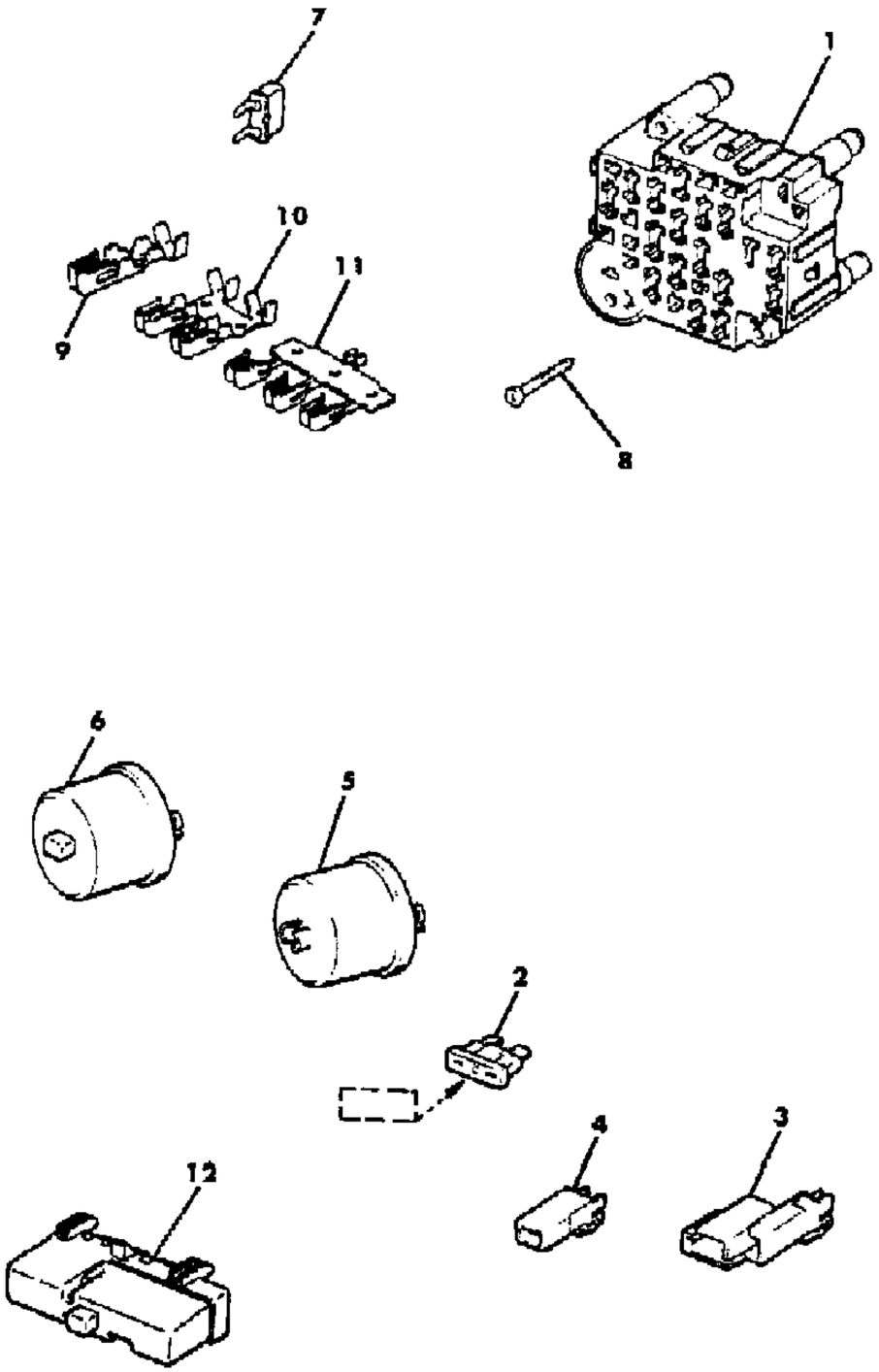

ITEM	PART NUMBER	QTY	BODY	MODEL	DESCRIPTION
1	J575 0329	1			PANEL, Fuse
2					FUSE
	J323 1211	1			3 Amp.
	J323 1215	1			5 Amp.
	J323 1216	1			15 Amp.
	J323 1217	1			20 Amp.
	J323 1218	1			25 Amp.
3					CONNECTOR
	J323 1881	1			Brown
	J417 9632	1			Natural
	J323 1882	1			Red
	J323 3016	1			Black
4					CONNECTOR
	J323 1235	1			Black
	J323 1239	1			Brown
	J323 1236	1			Green
	J323 1237	1			Natural
	J323 1234	1			Orange
	J323 1233	1			Red
5	J545 2266	1			FLASHER, Hazard
6					FLASHER, Turn Signal
	J321 2068	1			
	J575 8791	1			EXPORT
7	J575 1196	1			BREAKER, Wiper Circuit
8	3420 1598	2			SCREW
9	J323 1223	AR			TERMINAL
10	J323 1224	AR			TERMINAL
11	J323 1225	AR			TERMINAL
12	J322 9545	1			BUZZER, Headlamp/Seatbelt

MODEL CODES

16=Cherokee 2 Dr.(1981-83)	78=Cherokee 4WD-4 Dr.(1984-86)	64=Comanche 2WD-6 Ft. Box(1986)	25=J-10 Truck 7 Ft. Box(1981-84)
17=Cherokee 2 Dr.(1981-83)	85=CJ-5 (1981-83)	66=Comanche 2WD-7 Ft. Box(1986)	26=J10 Truck 8 Ft. Box(1981-86)
73=Cherokee 2WD-2 Dr.(1984-86)	86=CJ-6(1981)	63=Comanche 4WD-6 Ft. Box(1986)	27=J-20 Truck 8 Ft. Box(1981-86)
74=Cherokee 2WD-4 Dr.(1984-86)	87=CJ-7(1981-86)	65=Comanche 4WD-7 Ft. Box(1986)	15=Wagoneer 4 Dr.(1981-83)
18=Cherokee 4 Dr.(1981-83)	88=CJ-8, Scrambler(1981-86)	15=Grand Wagoneer 4 Dr.(1984-86)	75=Wagoneer 4WD-4 Dr.(1984-86)
77=Cherokee 4WD-2 Dr.(1984-86)			

BODY
CJ=CJ-5, CJ-6, CJ-7, CJ-8, Scrambler(1981-86)
MJ=Comanche Pickup(1986)

STYLES
SJ=Wagoneer(1981-83), Grand Wagoneer(1984-86), Cherokee(1981-83), J-10, J-20(1981-86)
XJ=Wagoneer(1984-86), Cherokee(1984-86)

AR = Use as Required - = Non Illustrated Part P.A.R. = Paint as Required

« RETURN TO GROUP INDEX

INSTRUMENT PANEL CLUSTER CJ-5,6,7,8 SCRAMBLER
Figure 8A-400

81J 082 400

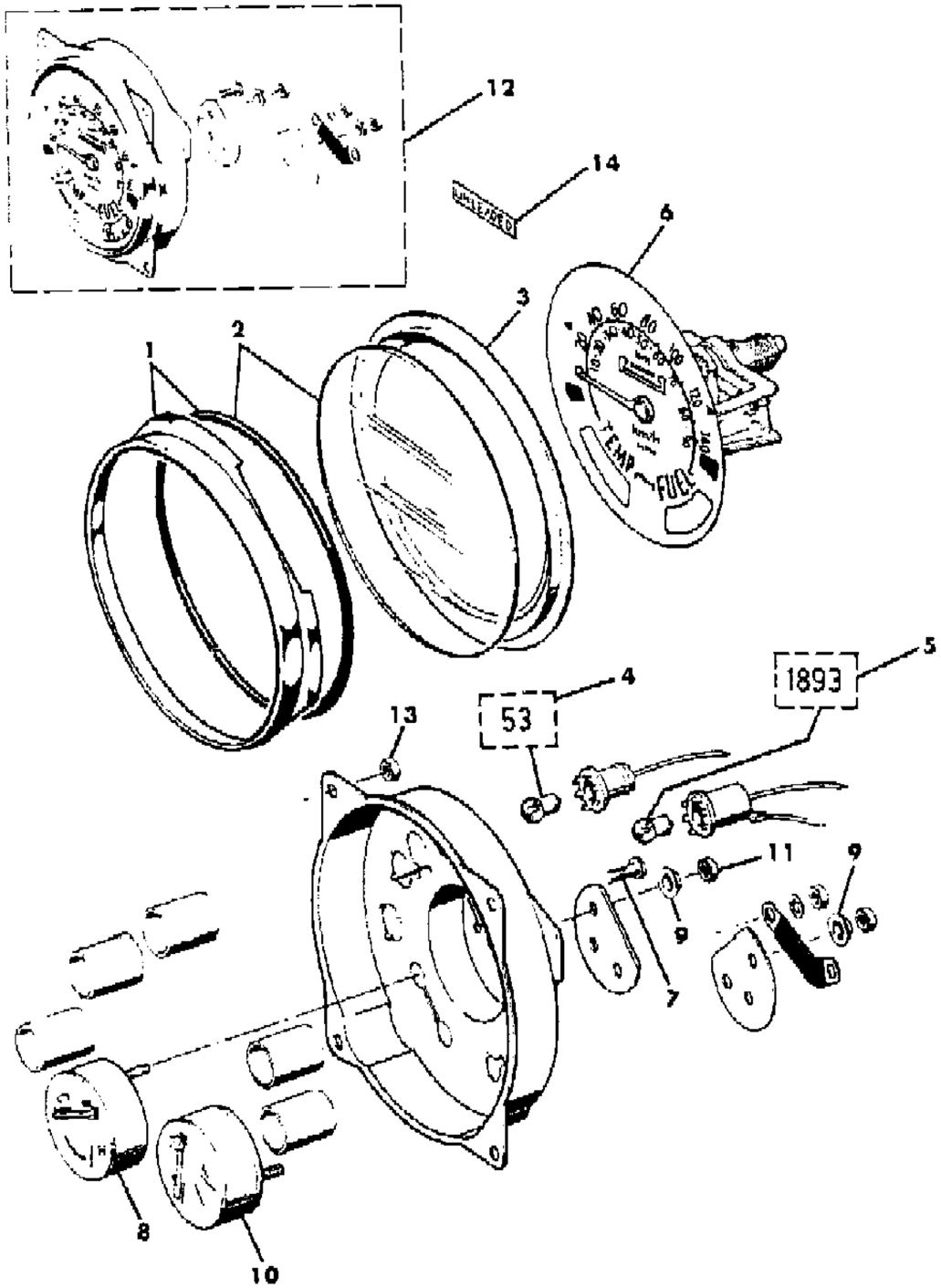

ITEM	PART NUMBER	QTY	BODY	MODEL	DESCRIPTION
1	J812 3058	1			BEZEL
2	J091 3387	1			LENS
3	J091 3388	1			RETAINER
4	J013 1282	AR			BULB #53 ***
5	J345 1933	AR			BULB #1893 ***
6					SPEEDOMETER, Miles
	J813 3350	1			1981, 85 Mph.
	J813 4184	1			1982-86, 85 Mph.
	J813 1752	1			1981, 90 Mph., EXPORT
	J813 4185	1			1982-86, 85 Mph., EXPORT
					SPEEDOMETER, Kilometers
	J813 1784	1			1981
	J813 4186	1			1982-86
	J813 4584	1			1982-86, Japan
7	J080 3366	2			SCREW
8	J812 6920	1			GAUGE, Temperature
9	J320 8221	2			NUT
10	J812 6919	1			GAUGE, Fuel
11	J014 4562	2			NUT
12					CLUSTER, Miles
	J575 1184	1			1981-83
	J576 1110	1			1984-86, Unleaded Fuel
	J576 1111	1			1984-86, Leaded Fuel
					CLUSTER, Kilometers
	J575 2379	1			1981-83
	J576 2566	1			1982-85, Japan
	J576 1112	1			1984-86
13	J027 1166	4			NUT
14	J546 1055	1			DECAL

MODEL CODES

16=Cherokee 2 Dr.(1981-83)
17=Cherokee 2 Dr.(1981-83)
73=Cherokee 2WD-2 Dr.(1984-86)
74=Cherokee 2WD-4 Dr.(1984-86)
18=Cherokee 4 Dr.(1981-83)
77=Cherokee 4WD-2 Dr.(1984-86)
78=Cherokee 4WD-4 Dr.(1984-86)
85=CJ-5 (1981-83)
86=CJ-6(1981)
87=CJ-7(1981-86)
88=CJ-8, Scrambler(1981-86)
64=Comanche 2WD-6 Ft. Box(1986)
66=Comanche 2WD-7 Ft. Box(1986)
63=Comanche 4WD-6 Ft. Box(1986)
65=Comanche 4WD-7 Ft. Box(1986)
15=Grand Wagoneer 4 Dr.(1984-86)
25=J-10 Truck 7 Ft. Box(1981-84)
26=J10 Truck 8 Ft. Box(1981-86)
27=J-20 Truck 8 Ft. Box(1981-86)
15=Wagoneer 4 Dr.(1981-83)
75=Wagoneer 4WD-4 Dr.(1984-86)

BODY
CJ=CJ-5, CJ-6, CJ-7, CJ-8, Scrambler(1981-86)
MJ=Comanche Pickup(1986)

STYLES
SJ=Wagoneer(1981-83), Grand Wagoneer(1984-86), Cherokee(1981-83), J-10, J-20(1981-86)
XJ=Wagoneer(1984-86), Cherokee(1984-86)

AR = Use as Required - = Non Illustrated Part P.A.R. = Paint as Required

« RETURN TO GROUP INDEX

INSTRUMENT PANEL TACHOMETER, CLOCK AND GAUGES CJ-5,6,7,8 SCRAMBLER
Figure 8A-500

81J 082 500

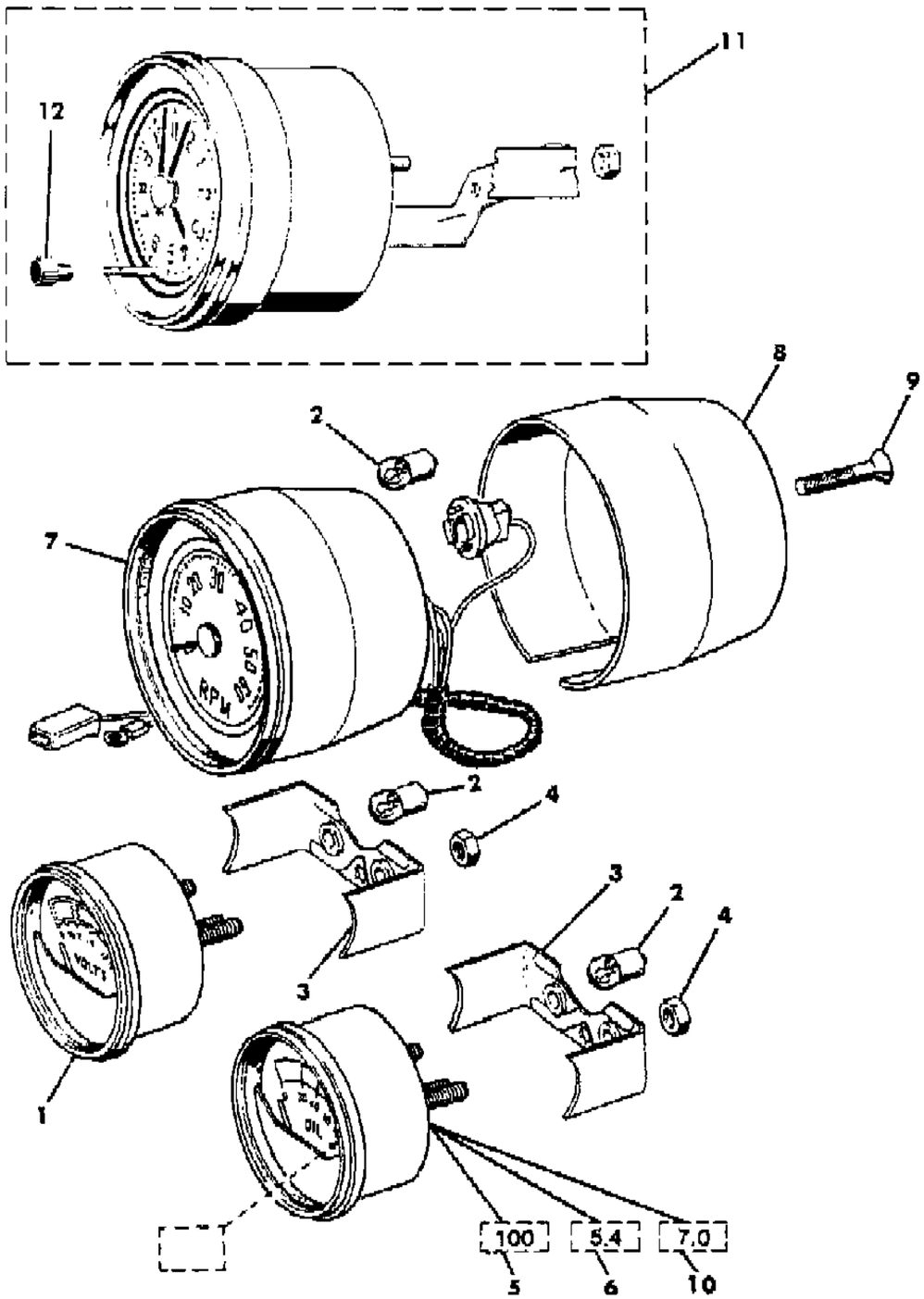

ITEM	PART NUMBER	QTY	BODY	MODEL	DESCRIPTION
1	J575 0278	1			VOLTMETER ***
2					BULB
	J131 1282	AR			#53
	J093 6653	AR			#158
	J045 4626	AR			#1816
3	J535 3932	2			BRACKET
4	J027 1169	4			NUT
5					GAUGE, Oil (0-100 lb.)
	J575 0279	1			Gas Engine
	J575 2366	1			Diesel Engine
6	J576 4215	1			GAUGE, Oil (0-5.4 Bars)
7					TACHOMETER
	J575 8492	1			Four Cylinder
	J545 9418	1			Six Cylinder
	J545 9419	1			Eight Cylinder
	J576 1307	1			EXPORT
8	J545 9383	1			CUP ***
9	S016 3613	1			SCREW
10	J576 4214	1			GAUGE, Oil (0-7.0 Bars)
11	J576 1330	1			CLOCK
12	J812 8711	1			KNOB

MODEL CODES

16=Cherokee 2 Dr.(1981-83)
17=Cherokee 2 Dr.(1981-83)
73=Cherokee 2WD-2 Dr.(1984-86)
74=Cherokee 2WD-4 Dr.(1984-86)
18=Cherokee 4 Dr.(1981-83)
77=Cherokee 4WD-2 Dr.(1984-86)
78=Cherokee 4WD-4 Dr.(1984-86)
85=CJ-5 (1981-83)
86=CJ-6(1981)
87=CJ-7(1981-86)
88=CJ-8, Scrambler(1981-86)
64=Comanche 2WD-6 Ft. Box(1986)
66=Comanche 2WD-7 Ft. Box(1986)
63=Comanche 4WD-6 Ft. Box(1986)
65=Comanche 4WD-7 Ft. Box(1986)
15=Grand Wagoneer 4 Dr.(1984-86)
25=J-10 Truck 7 Ft. Box(1981-84)
26=J10 Truck 8 Ft. Box(1981-86)
27=J-20 Truck 8 Ft. Box(1981-86)
15=Wagoneer 4 Dr.(1981-83)
75=Wagoneer 4WD-4 Dr.(1984-86)

BODY
CJ=CJ-5, CJ-6, CJ-7, CJ-8, Scrambler(1981-86)
MJ=Comanche Pickup(1986)

STYLES
SJ=Wagoneer(1981-83), Grand Wagoneer(1984-86), Cherokee(1981-83), J-10, J-20(1981-86)
XJ=Wagoneer(1984-86), Cherokee(1984-86)

AR = Use as Required - = Non Illustrated Part P.A.R. = Paint as Required

« RETURN TO GROUP INDEX

ANTENNA, SPEAKERS AND RADIO KNOBS CJ-5,6,7,8 SCRAMBLER
Figure 8A-600

81J 082 600

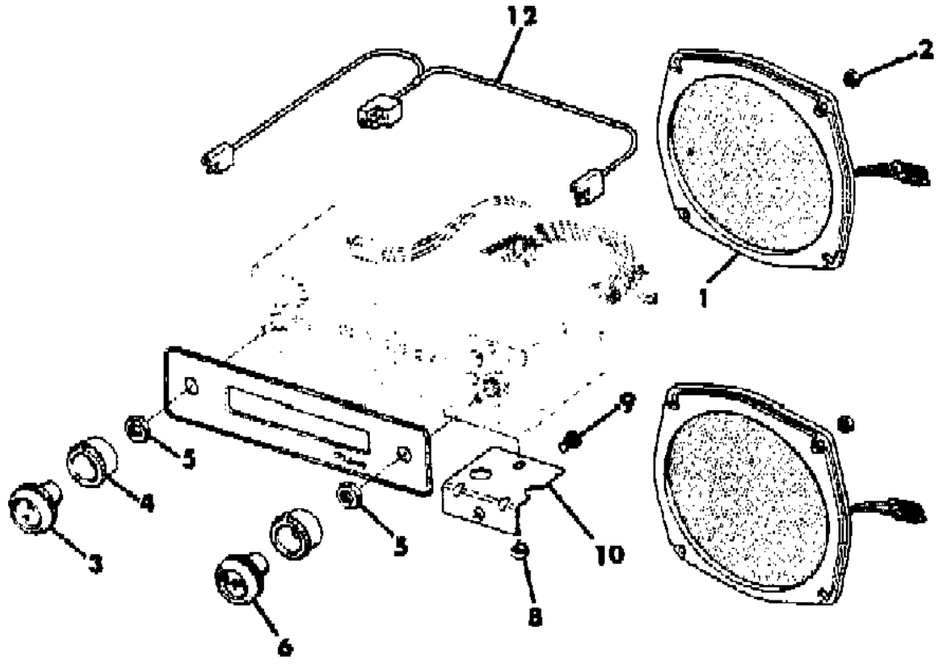

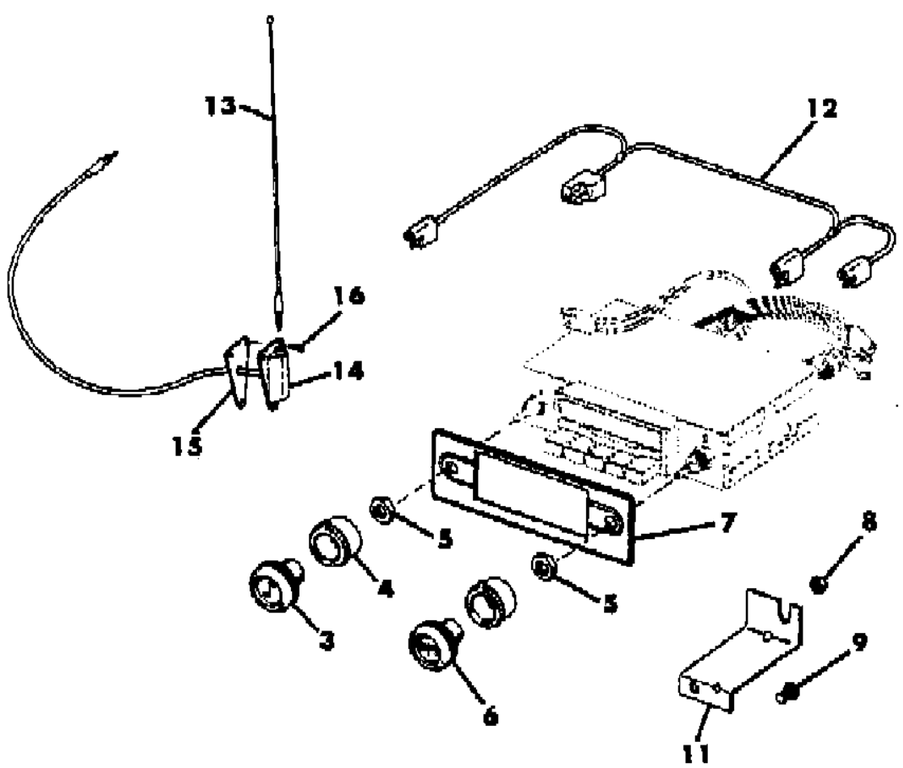

ITEM	PART NUMBER	QTY	BODY	MODEL	DESCRIPTION
1					SPEAKER
	J575 8333	1			Am Radio
	J576 2589	2			Am/Fm Radio
2	J027 1163	8			NUT
3					KNOB, Volume
	J545 9112	1			Am Radio
	J576 2663	1			Am/Fm Radio
4	J576 2664	2			KNOB, Tone
5					NUT
	J400 0099	2			Am Radio
	J420 0331	2			Am/Fm Radio
6					KNOB, Tuning
	J545 9113	1			Am Radio
	J576 2663	1			Am/Fm Radio
7	J576 2662	1			BEZEL
8					NUT
	J027 1166	1			NUT
	J027 1172	1			Am/Fm Radio
9					SCREW
	J016 4487	1			Am Radio
	S150 3056	1			Am/Fm Radio
10	J546 2706	1			BRACKET
11	J576 3676	1			BRACKET
12					HARNESS, Speaker
	J575 2946	1			Am Radio
	J576 2660	1			Am/Fm Radio
13	J899 3415	1			ANTENNA
14	J812 7842	1			BASE, with cable
15	J097 5528	1			PAD, Antenna
16	J400 2807	3			SCREW

MODEL CODES

16=Cherokee 2 Dr.(1981-83)
17=Cherokee 2 Dr.(1981-83)
73=Cherokee 2WD-2 Dr.(1984-86)
74=Cherokee 2WD-4 Dr.(1984-86)
18=Cherokee 4 Dr.(1981-83)
77=Cherokee 4WD-2 Dr.(1984-86)
78=Cherokee 4WD-4 Dr.(1984-86)
85=CJ-5 (1981-83)
86=CJ-6(1981)
87=CJ-7(1981-86)
88=CJ-8, Scrambler(1981-86)
64=Comanche 2WD-6 Ft. Box(1986)
66=Comanche 2WD-7 Ft. Box(1986)
63=Comanche 4WD-6 Ft. Box(1986)
65=Comanche 4WD-7 Ft. Box(1986)
15=Grand Wagoneer 4 Dr.(1984-86)
25=J-10 Truck 7 Ft. Box(1981-84)
26=J10 Truck 8 Ft. Box(1981-86)
27=J-20 Truck 8 Ft. Box(1981-86)
15=Wagoneer 4 Dr.(1981-83)
75=Wagoneer 4WD-4 Dr.(1984-86)

BODY
CJ=CJ-5, CJ-6, CJ-7, CJ-8, Scrambler(1981-86)
MJ=Comanche Pickup(1986)

STYLES
SJ=Wagoneer(1981-83), Grand Wagoneer(1984-86), Cherokee(1981-83), J-10, J-20(1981-86)
XJ=Wagoneer(1984-86), Cherokee(1984-86)

AR = Use as Required - = Non Illustrated Part P.A.R. = Paint as Required

« RETURN TO GROUP INDEX

CONSOLE, FLOOR CJ-5,6,7,8 SCRAMBLER
Figure 8A-700

81J 082 700

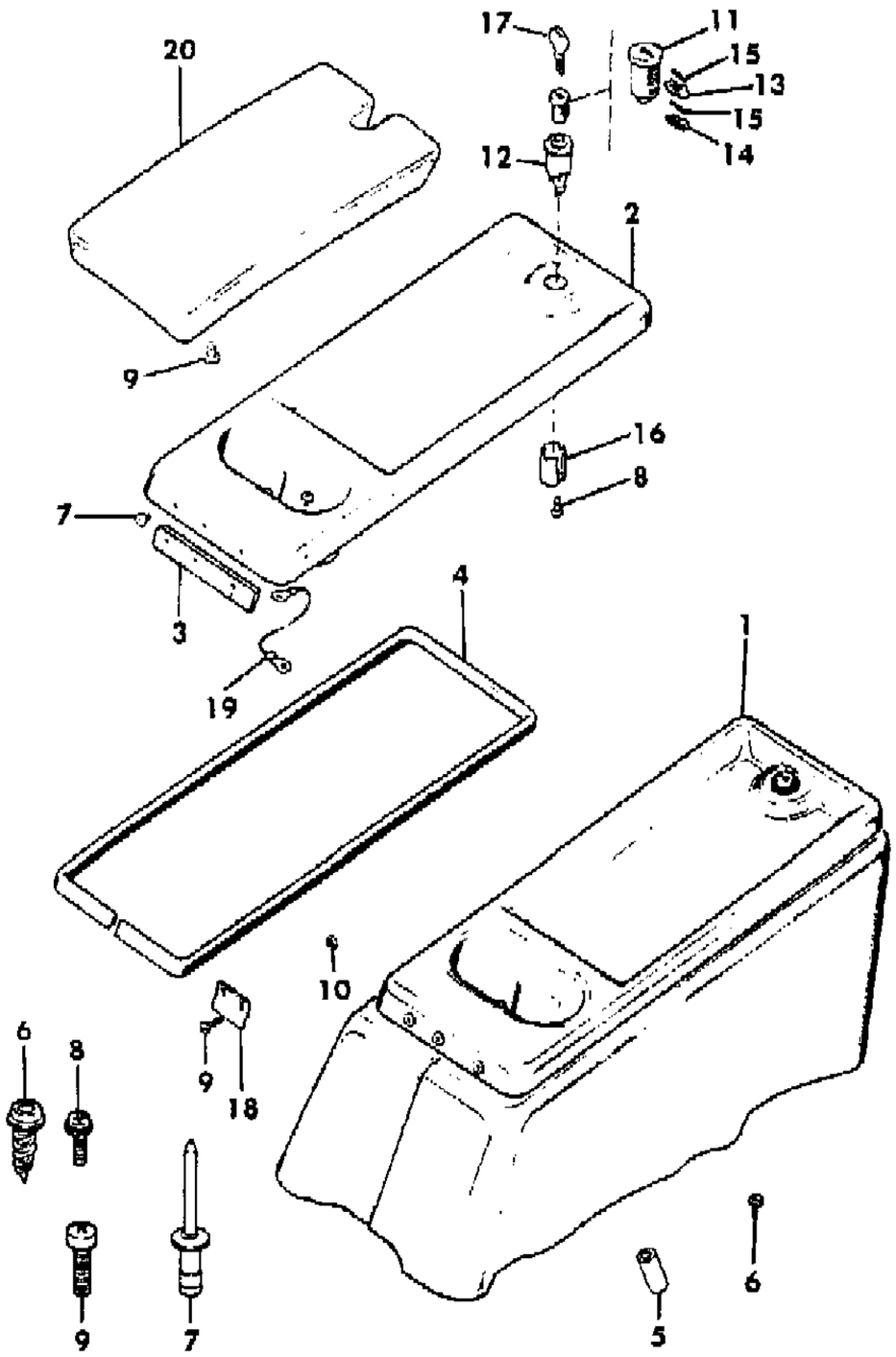

ITEM	PART NUMBER	QTY	BODY	MODEL	DESCRIPTION
1	J899 7174	1			CONSOLE
2	J546 1604	1			DOOR, Console
3	J546 1605	1			HINGE, Door
4	J546 1606	1			SEAL, Door
5	J546 1607	1			SEAL, Drain
6	J400 2359	4			SCREW
7	J400 5300	6			RIVET
8	J045 0649	1			SCREW
9	J015 9920	4			SCREW
10	J027 1166	2			NUT
11	J448 7663	1			CYLINDER, Lock
12	J448 4698	1			CASE
13					TUMBLER, Cylinder ***
	J812 2876	AR			"1"
	J812 2877	AR			"2"
	J812 2878	AR			"3"
	J812 2879	AR			"4"
	J812 2880	AR			"5"
14	J812 2875	1			RETAINER, Tumbler
15	J812 2881	5			SPRING
16	J546 3621	1			RETAINER, Lock
17	J364 1913	1			KEY
	J813 2541	1			STRIKER
19	J374 1968	1			CABLE, Door
20					COVER, Armrest
	J575 4516	1			Black
	J575 5959	1			Nutmeg

MODEL CODES

16=Cherokee 2 Dr.(1981-83)
17=Cherokee 2 Dr.(1981-83)
73=Cherokee 2WD-2 Dr.(1984-86)
74=Cherokee 2WD-4 Dr.(1984-86)
18=Cherokee 4 Dr.(1981-83)
77=Cherokee 4WD-2 Dr.(1984-86)
78=Cherokee 4WD-4 Dr.(1984-86)
85=CJ-5 (1981-83)
86=CJ-6(1981)
87=CJ-7(1981-86)
88=CJ-8, Scrambler(1981-86)
64=Comanche 2WD-6 Ft. Box(1986)
66=Comanche 2WD-7 Ft. Box(1986)
63=Comanche 4WD-6 Ft. Box(1986)
65=Comanche 4WD-7 Ft. Box(1986)
15=Grand Wagoneer 4 Dr.(1984-86)
25=J-10 Truck 7 Ft. Box(1981-84)
26=J10 Truck 8 Ft. Box(1981-86)
27=J-20 Truck 8 Ft. Box(1981-86)
15=Wagoneer 4 Dr.(1981-83)
75=Wagoneer 4WD-4 Dr.(1984-86)

BODY
CJ=CJ-5, CJ-6, CJ-7, CJ-8, Scrambler(1981-86)
MJ=Comanche Pickup(1986)

STYLES
SJ=Wagoneer(1981-83), Grand Wagoneer(1984-86), Cherokee(1981-83), J-10, J-20(1981-86)
XJ=Wagoneer(1984-86), Cherokee(1984-86)

AR = Use as Required - = Non Illustrated Part P.A.R. = Paint as Required

« RETURN TO GROUP INDEX

CLIPS CJ-5,6,7,8 SCRAMBLER
Figure 8A-800

81J 082 800

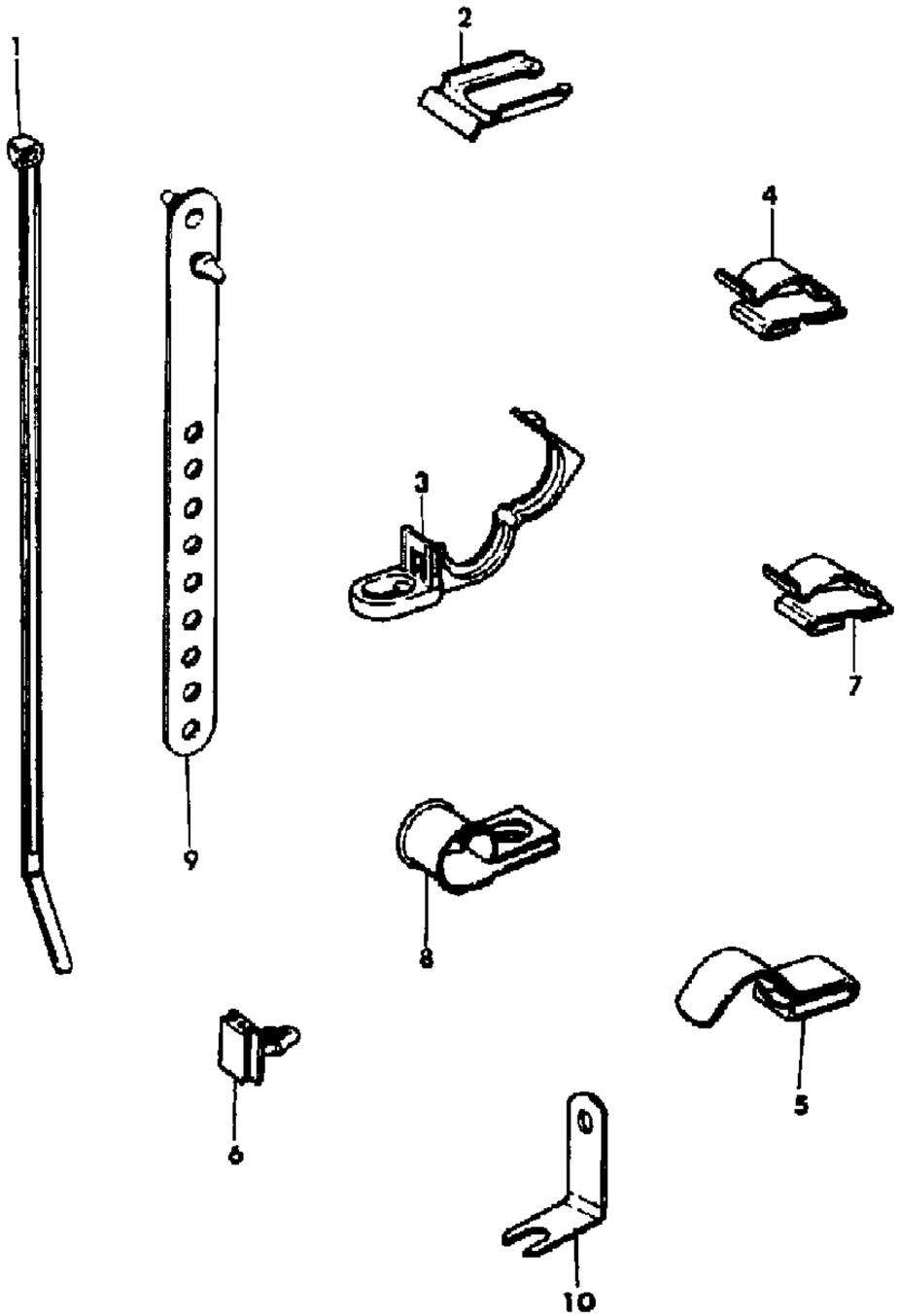

ITEM	PART NUMBER	QTY	BODY	MODEL	DESCRIPTION
1	J322 3227	AR			STRAP
2	J321 7581	AR			CLIP
3	J545 9095	AR			CLIP
4	3420 2362	AR			CLIP, .40"
5	J545 4903	AR			CLIP
6	J417 9831	AR			CLIP
7	J094 5201	AR			CLIP, .50"
8	J014 0780	AR			CLIP
9	J092 6878	AR			STRAP
10	J575 2416	AR			SUPPORT, Harness

MODEL CODES
16=Cherokee 2 Dr.(1981-83)
17=Cherokee 2 Dr.(1981-83)
73=Cherokee 2WD-2 Dr.(1984-86)
74=Cherokee 2WD-4 Dr.(1984-86)
18=Cherokee 4 Dr.(1981-83)
77=Cherokee 4WD-2 Dr.(1984-86)
78=Cherokee 4WD-4 Dr.(1984-86)
85=CJ-5 (1981-83)
86=CJ-6(1981)
87=CJ-7(1981-86)
88=CJ-8, Scrambler(1981-86)
64=Comanche 2WD-6 Ft. Box(1986)
66=Comanche 2WD-7 Ft. Box(1986)
63=Comanche 4WD-6 Ft. Box(1986)
65=Comanche 4WD-7 Ft. Box(1986)
15=Grand Wagoneer 4 Dr.(1984-86)
25=J-10 Truck 7 Ft. Box(1981-84)
26=J10 Truck 8 Ft. Box(1981-86)
27=J-20 Truck 8 Ft. Box(1981-86)
15=Wagoneer 4 Dr.(1981-83)
75=Wagoneer 4WD-4 Dr.(1984-86)

BODY
CJ=CJ-5, CJ-6, CJ-7, CJ-8, Scrambler(1981-86)
MJ=Comanche Pickup(1986)

STYLES
SJ=Wagoneer(1981-83), Grand Wagoneer(1984-86), Cherokee(1981-83), J-10, J-20(1981-86)
XJ=Wagoneer(1984-86), Cherokee(1984-86)

AR = Use as Required - = Non Illustrated Part P.A.R. = Paint as Required

« RETURN TO GROUP INDEX

RELAYS CJ-5,6,7,8 SCRAMBLER
Figure 8A-900

81J 082 900

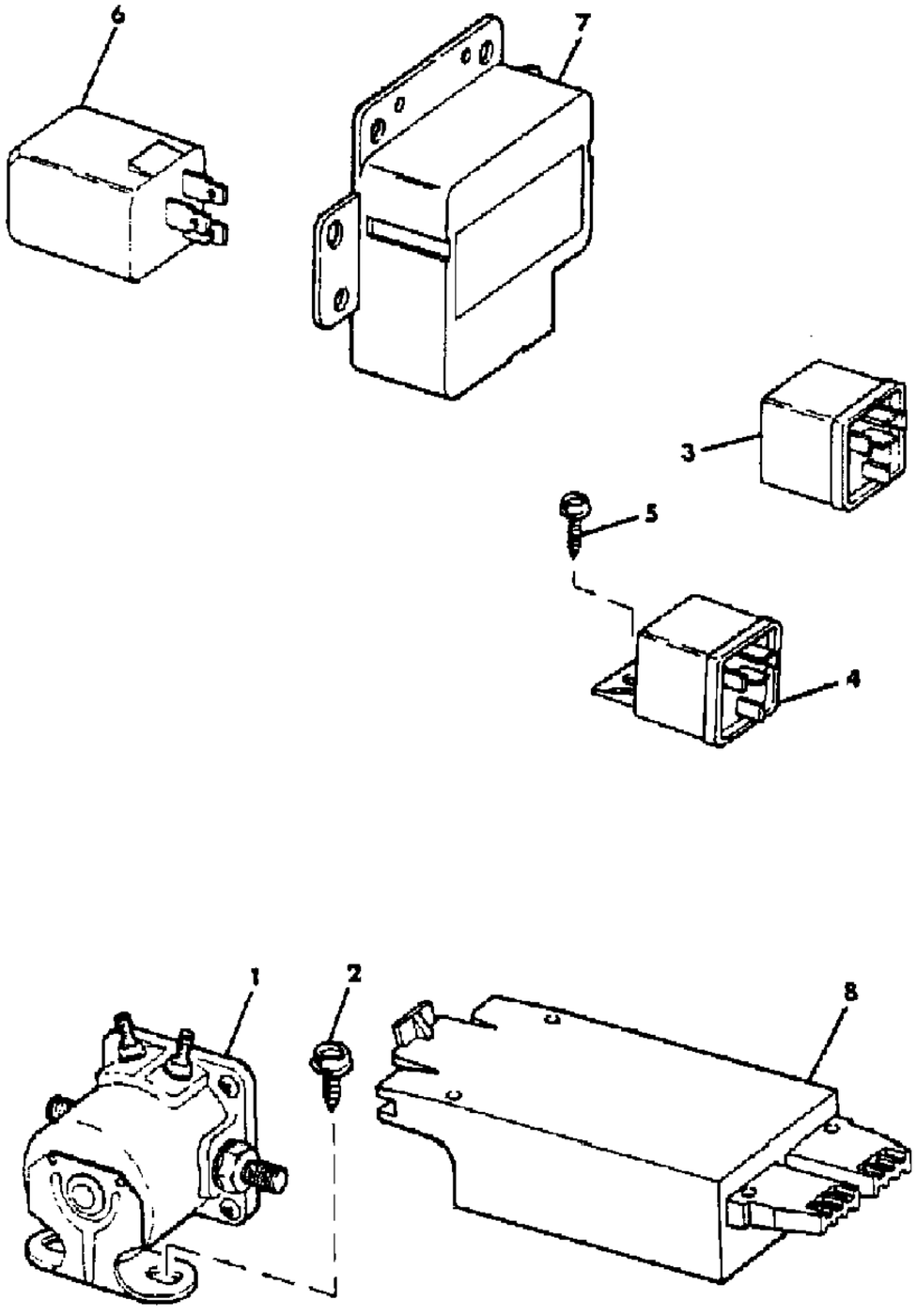

ITEM	PART NUMBER	QTY	BODY	MODEL	DESCRIPTION
1					RELAY, Starter
	J575 8600	1			1981-83, GM Four Cylinder
	J323 5898	1			1983-85, AMC Four Cylinder
	J323 0406	1			1981-83, Six Cylinder, With Manual Transmission
	J323 5898	1			1984-86, Six Cylinder, With Manual Transmission
	J575 2125	1			1981-86, Six Cylinder, With Auto Transmission
	J806 0445	1			1981-85 Diesel
2	J812 0054	2			SCREW
3					RELAY, Manifold Heater
	3300 1779	1			1984-86 Four Cylinder
	J323 9095	1			1981-86 Six Cylinder
4					RELAY, Fog Lamp
	J322 5922	1			1981
	3300 1776	1			1982-83
	5600 2958	1			1984-86
5	1150 2843	1			SCREW
6	J576 4039	1			RELAY, Horn
7	J323 5649	1			TIMER, Emissions ***
8	J372 8007	1			GOVERNOR, Intermittent Wipers ***

MODEL CODES

16=Cherokee 2 Dr.(1981-83)
17=Cherokee 2 Dr.(1981-83)
73=Cherokee 2WD-2 Dr.(1984-86)
74=Cherokee 2WD-4 Dr.(1984-86)
18=Cherokee 4 Dr.(1981-83)
77=Cherokee 4WD-2 Dr.(1984-86)
78=Cherokee 4WD-4 Dr.(1984-86)
85=CJ-5 (1981-83)
86=CJ-6(1981)
87=CJ-7(1981-86)
88=CJ-8, Scrambler(1981-86)
64=Comanche 2WD-6 Ft. Box(1986)
66=Comanche 2WD-7 Ft. Box(1986)
63=Comanche 4WD-6 Ft. Box(1986)
65=Comanche 4WD-7 Ft. Box(1986)
15=Grand Wagoneer 4 Dr.(1984-86)
25=J-10 Truck 7 Ft. Box(1981-84)
26=J10 Truck 8 Ft. Box(1981-86)
27=J-20 Truck 8 Ft. Box(1981-86)
15=Wagoneer 4 Dr.(1981-83)
75=Wagoneer 4WD-4 Dr.(1984-86)

BODY
CJ=CJ-5, CJ-6, CJ-7, CJ-8, Scrambler(1981-86)
MJ=Comanche Pickup(1986)

STYLES
SJ=Wagoneer(1981-83), Grand Wagoneer(1984-86), Cherokee(1981-83), J-10, J-20(1981-86)
XJ=Wagoneer(1984-86), Cherokee(1984-86)

AR = Use as Required - = Non Illustrated Part P.A.R. = Paint as Required

« RETURN TO GROUP INDEX

CONNECTORS CJ-5,6,7,8 SCRAMBLER
Figure 8A-1000

81J 082 1000

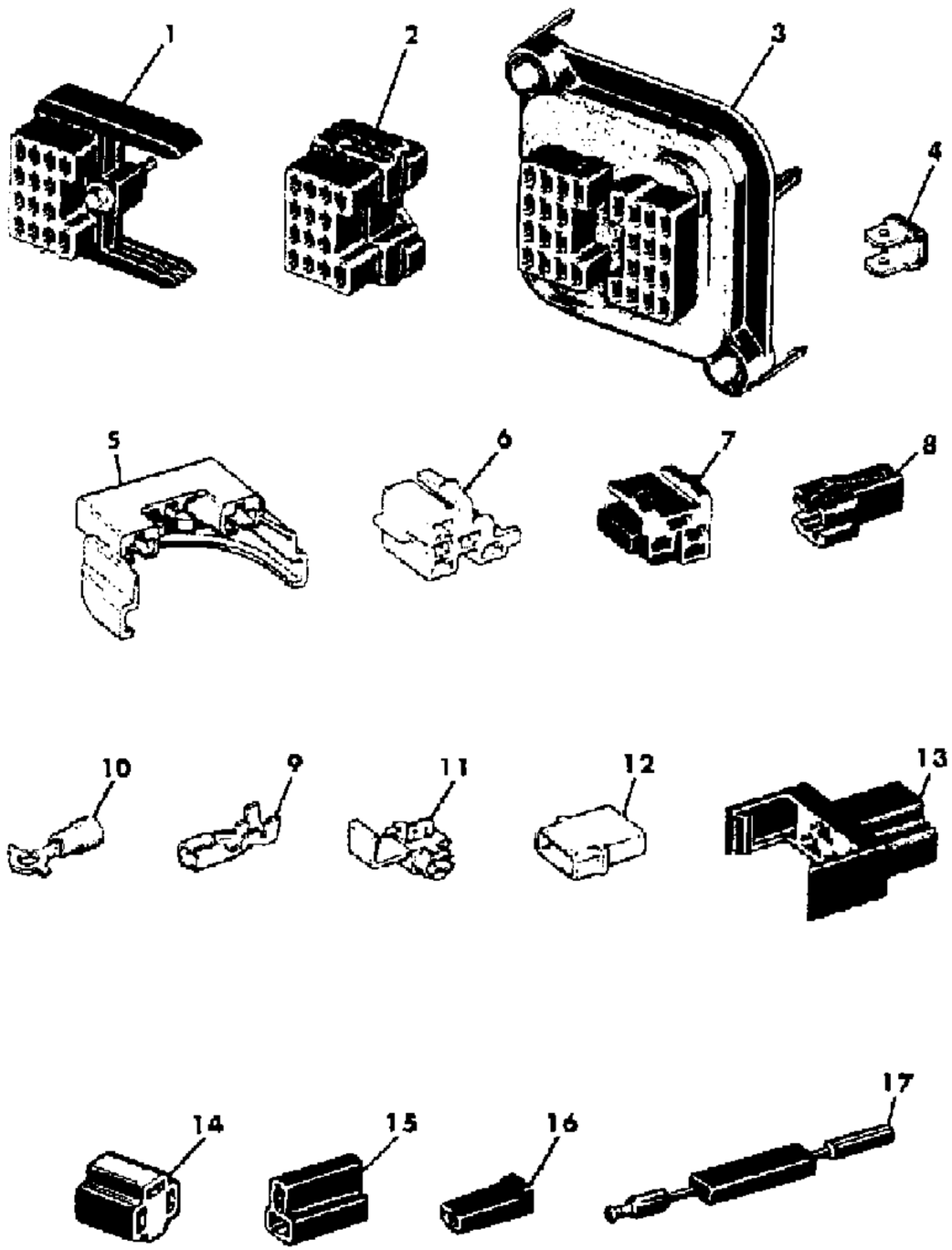

ITEM	PART NUMBER	QTY	BODY	MODEL	DESCRIPTION
1	J417 9421	1			CONNECTOR, Bulkhead
2	J417 9420	1			CONNECTOR, Bulkhead
3	J319 7995	1			CONNECTOR
4	J318 6890	AR			TERMINAL, Jumper
5	J323 0639	1			CONNECTOR
6	J448 8006	AR			CONNECTOR, Switch
7	J448 8007	AR			CONNECTOR, Switch
8	J575 0947	AR			CONNECTOR
9	J092 5062	AR			TERMINAL
10	J099 1641	AR			TERMINAL
11	J318 6888	AR			CONNECTOR, Splice
12	J319 8786	AR			INSULATOR
13	J417 7111	AR			CONNECTOR
14	J099 8475	AR			CONNECTOR
15	J093 2369	AR			CONNECTOR
16	J093 2370	AR			CONNECTOR
17	3600 0597	AR			DIODE

MODEL CODES

16=Cherokee 2 Dr.(1981-83)
17=Cherokee 2 Dr.(1981-83)
73=Cherokee 2WD-2 Dr.(1984-86)
74=Cherokee 2WD-4 Dr.(1984-86)
18=Cherokee 4 Dr.(1981-83)
77=Cherokee 4WD-2 Dr.(1984-86)
78=Cherokee 4WD-4 Dr.(1984-86)
85=CJ-5 (1981-83)
86=CJ-6(1981)
87=CJ-7(1981-86)
88=CJ-8, Scrambler(1981-86)
64=Comanche 2WD-6 Ft. Box(1986)
66=Comanche 2WD-7 Ft. Box(1986)
63=Comanche 4WD-6 Ft. Box(1986)
65=Comanche 4WD-7 Ft. Box(1986)
15=Grand Wagoneer 4 Dr.(1984-86)
25=J-10 Truck 7 Ft. Box(1981-84)
26=J10 Truck 8 Ft. Box(1981-86)
27=J-20 Truck 8 Ft. Box(1981-86)
15=Wagoneer 4 Dr.(1981-83)
75=Wagoneer 4WD-4 Dr.(1984-86)

BODY
CJ=CJ-5, CJ-6, CJ-7, CJ-8, Scrambler(1981-86)
MJ=Comanche Pickup(1986)

STYLES
SJ=Wagoneer(1981-83), Grand Wagoneer(1984-86), Cherokee(1981-83), J-10, J-20(1981-86)
XJ=Wagoneer(1984-86), Cherokee(1984-86)

AR = Use as Required - = Non Illustrated Part P.A.R. = Paint as Required

« RETURN TO GROUP INDEX

INSTRUMENT PANEL PANEL AND BEZELS XJ CHEROKEE, XJ WAGONEER, COMANCHE
Figure 8A-1100

81J 082 1100

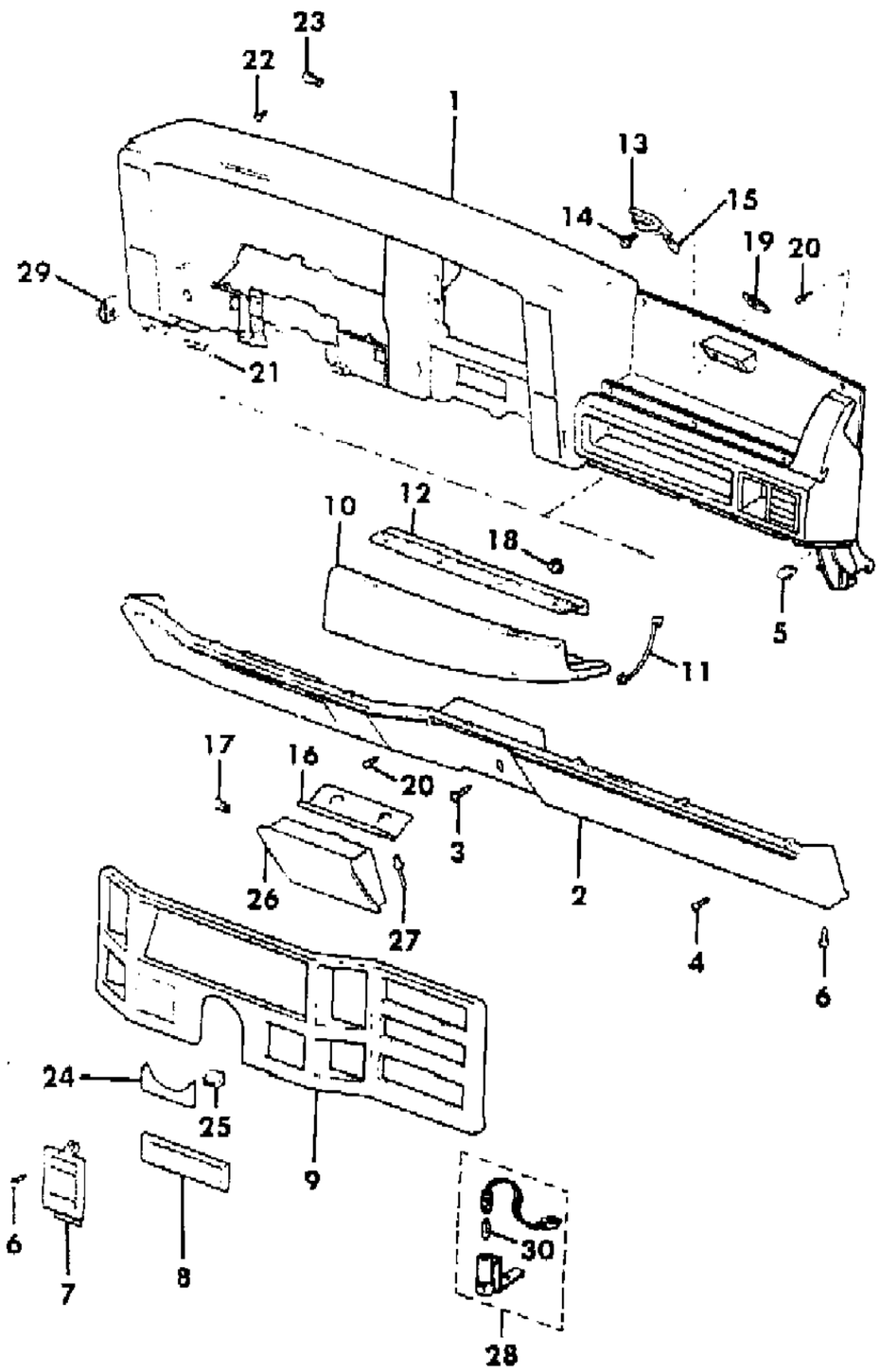

ITEM	PART NUMBER	QTY	BODY	MODEL	DESCRIPTION
1	8350 0406	1			PANEI, Instrument ***
2					PANEL, Lower
	5500 0922	1			1984-85
	5501 0925	1			1986
3	3420 1314	1			SCREW
4	1150 0055	7			SCREW
5	J044 5446	2			NUT
6	3420 1474	2			SCREW
7	5500 0652	1			COVER, Clock Opening
8	5500 2063	1			COVER, Radio Opening
9					BEZEL, Cluster
	5500 5107	1			1984-86 Almond/Chrome
	5500 2240	1			1984-85 Black
	5500 5659	1			1986 Black
	5500 3508	1			1984-85 Black/Chrome
	5500 5660	1			1986 Black/Chrome
	5500 7964	1			1984-86 Med.Blue/Chrome
	5500 5106	1			1984-85 Slate Blue/Chrome
	5500 5108	1			1984-85 Garnet/Chrome
	5500 5662	1			1986 Garnet/Chrome
	5500 6639	1			1984-86 Honey/Chrome
	5500 5109	1			1984-85 Nutmeg
	8350 1390	1			1984-86 Silver
	8351 0173	1			1984-86 Woodgrain
	5505 2626	1			1986 Silver/Black
10	5500 0969	1			DOOR, Glovebox
11	5500 0344	1			CABLE, Door
12	5500 0340	1			HINGE, Glovebox
13	5500 1086	1			STRIKER, With Lamp
14	1150 1012	2			SCREW
15	J942 1330	1			BULB #194 ***
16	5500 0359	1			RETAINER, Ash Receiver
17	3420 1650	2			CLIP
18	1150 2722	3			NUT
19	3420 1820	3			NUT
20	J400 0093	4			BUMPER, Door
21	3420 1540	2			SCREW
22	1150 3059	4			SCREW
23	3420 1519	2			NUT

MODEL CODES

16=Cherokee 2 Dr.(1981-83)
17=Cherokee 2 Dr.(1981-83)
73=Cherokee 2WD-2 Dr.(1984-86)
74=Cherokee 2WD-4 Dr.(1984-86)
18=Cherokee 4 Dr.(1981-83)
77=Cherokee 4WD-2 Dr.(1984-86)
78=Cherokee 4WD-4 Dr.(1984-86)
85=CJ-5 (1981-83)
86=CJ-6(1981)
87=CJ-7(1981-86)
88=CJ-8, Scrambler(1981-86)
64=Comanche 2WD-6 Ft. Box(1986)
66=Comanche 2WD-7 Ft. Box(1986)
63=Comanche 4WD-6 Ft. Box(1986)
65=Comanche 4WD-7 Ft. Box(1986)
15=Grand Wagoneer 4 Dr.(1984-86)
25=J-10 Truck 7 Ft. Box(1981-84)
26=J10 Truck 8 Ft. Box(1981-86)
27=J-20 Truck 8 Ft. Box(1981-86)
15=Wagoneer 4 Dr.(1981-83)
75=Wagoneer 4WD-4 Dr.(1984-86)

BODY
CJ=CJ-5, CJ-6, CJ-7, CJ-8, Scrambler(1981-86)
MJ=Comanche Pickup(1986)

STYLES
SJ=Wagoneer(1981-83), Grand Wagoneer(1984-86), Cherokee(1981-83), J-10, J-20(1981-86)
XJ=Wagoneer(1984-86), Cherokee(1984-86)

AR = Use as Required - = Non Illustrated Part P.A.R. = Paint as Required

« RETURN TO GROUP INDEX »

INSTRUMENT PANEL PANEL AND BEZELS XJ CHEROKEE, XJ WAGONEER, COMANCHE
Figure 8A-1100

81J 082 1100

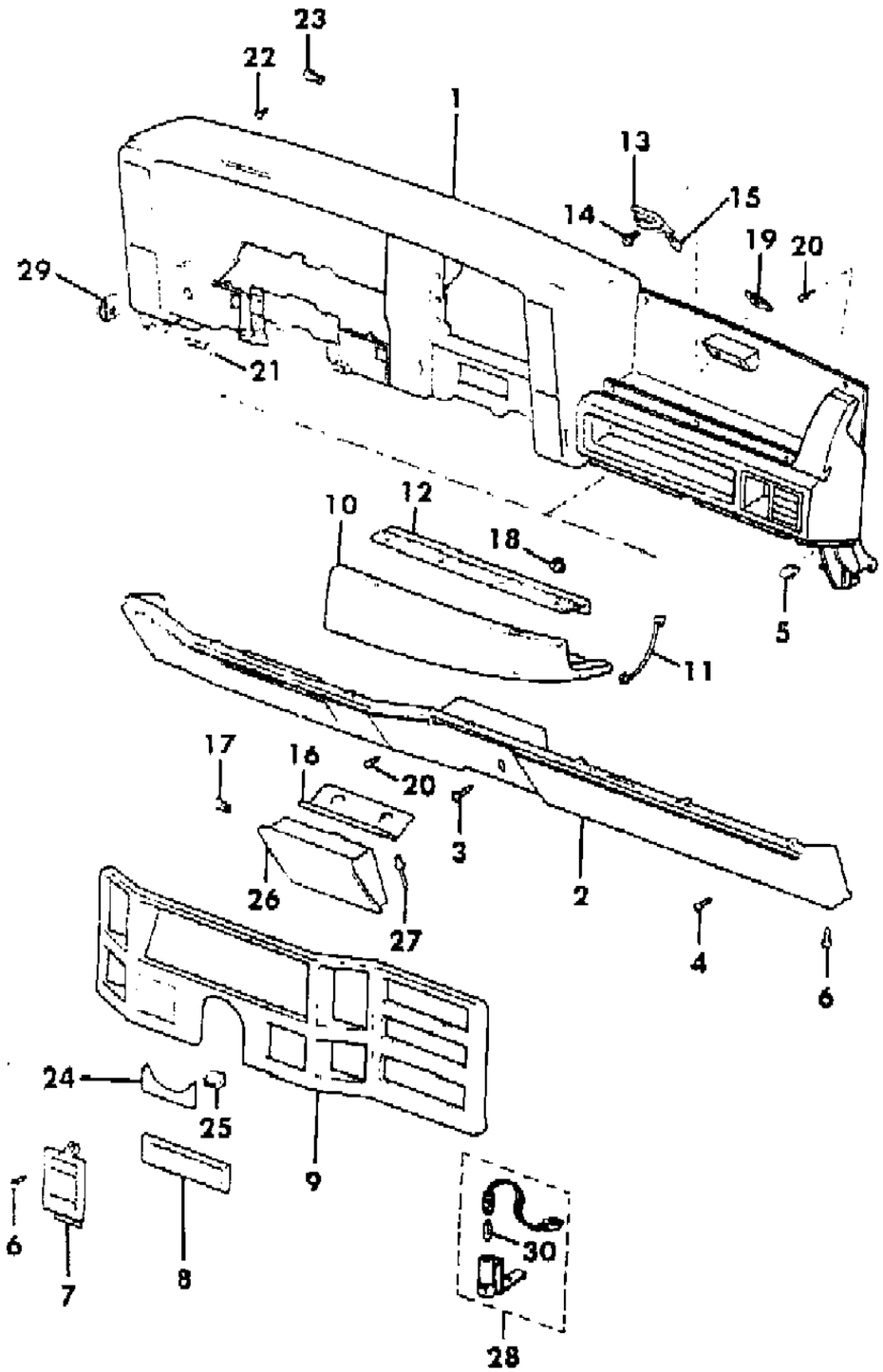

ITEM	PART NUMBER	QTY	BODY	MODEL	DESCRIPTION
24					FILLER, Steering Column
	5500 3101	1			Limited
	5500 3102	1			Laredo
	5500 3103	1			Execpt Limited or Laredo
25	3420 1497	8			CLIP
26	5500 0954	1			RECEIVER, Ash
27	3420 1197	2			RIVET
28	5600 0138	1			LAMP, Ash Receiver
29	1150 0656	4			NUT
30	J019 3065	1			BULB #216 ***

MODEL CODES

16=Cherokee 2 Dr.(1981-83)
17=Cherokee 2 Dr.(1981-83)
73=Cherokee 2WD-2 Dr.(1984-86)
74=Cherokee 2WD-4 Dr.(1984-86)
18=Cherokee 4 Dr.(1981-83)
77=Cherokee 4WD-2 Dr.(1984-86)
78=Cherokee 4WD-4 Dr.(1984-86)
85=CJ-5 (1981-83)
86=CJ-6(1981)
87=CJ-7(1981-86)
88=CJ-8, Scrambler(1981-86)
64=Comanche 2WD-6 Ft. Box(1986)
66=Comanche 2WD-7 Ft. Box(1986)
63=Comanche 4WD-6 Ft. Box(1986)
65=Comanche 4WD-7 Ft. Box(1986)
15=Grand Wagoneer 4 Dr.(1984-86)
25=J-10 Truck 7 Ft. Box(1981-84)
26=J10 Truck 8 Ft. Box(1981-86)
27=J-20 Truck 8 Ft. Box(1981-86)
15=Wagoneer 4 Dr.(1981-83)
75=Wagoneer 4WD-4 Dr.(1984-86)

BODY
CJ=CJ-5, CJ-6, CJ-7, CJ-8, Scrambler(1981-86)
MJ=Comanche Pickup(1986)

STYLES
SJ=Wagoneer(1981-83), Grand Wagoneer(1984-86), Cherokee(1981-83), J-10, J-20(1981-86)
XJ=Wagoneer(1984-86), Cherokee(1984-86)

AR = Use as Required - = Non Illustrated Part P.A.R. = Paint as Required

INSTRUMENT PANEL SWITCHES AND CIGAR LIGHTER XJ CHEROKEE, XJ WAGONEER, COMANCHE
Figure 8A-1200

81J 082 1200

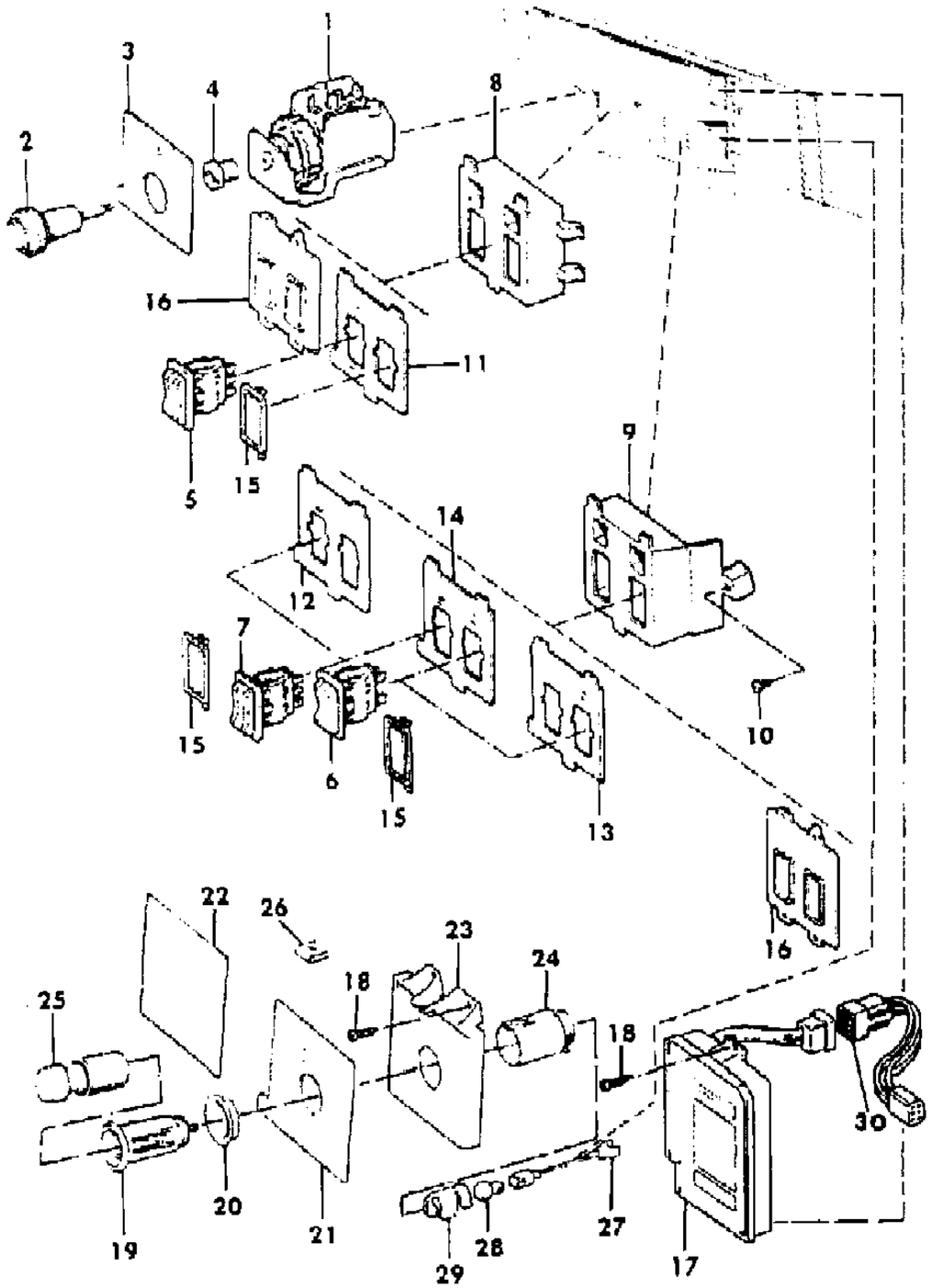

ITEM	PART NUMBER	QTY	BODY	MODEL	DESCRIPTION
1	5600 1197	1			SWITCH, Headlamp
2	5600 0022	1			KNOB, Headlamp
3	5600 0492	1			COVER, Headlamp Switch
4	J364 6513	1			NUT
5	5600 0025	AR			SWITCH, Foglamp/Cargolamp/Transmission Comfort
6	5600 0029	1			SWITCH, Rear Wiper
7	5600 0030	1			SWITCH, Defogger
8	5500 1893	1			HOUSING, Switch, Left
9	5500 1892	1			HOUSING, Switch, Right
10	1150 1012	2			SCREW
11					LENS, Lamp Identification
	5500 2939	1			Fog, U.S., Canada
	5500 4220	1			Fog, Rear, EXPORT
	5500 4221	1			Fog, Front/Rear, EXPORT
	5600 1581	1	MJ		Fog/Cargo
12	5500 2941	1			LENS, Deffoger
13					LENS
	5500 2942	1			Wiper
	5600 2131	1			Wiper/Transmission Comfort
14	5600 0499	1			LENS, Wiper/Deffoger
15	5500 3005	2			PLATE, Switch Filler
16	5600 0493	AR			COVER, Rocker Switch Opening
17	5600 0061	1			CLOCK
18	1150 0055	4			SCREW
19	J345 3270	1			HOUSING, Lighter
20	3500 1906	1			RING, Illumination
21	5600 0490	1			COVER, Lighter
22	5600 0058	1			COVER, Lighter
23	5500 2664	1			BRACKET, Lighter
24	3600 0242	1			CLAMP, Lighter
25	5600 0501	1			LIGHTER, Cigar ***
26	J400 4227	2			NUT
27	3600 0279	1			SOCKET, Bulb
28	J013 1282	1			BULB #53 ***
29	5600 1194	1			SHIELD, Bulb
30	8350 3369	1			HARNESS, Clock Adapter

MODEL CODES

16=Cherokee 2 Dr.(1981-83)
17=Cherokee 2 Dr.(1981-83)
73=Cherokee 2WD-2 Dr.(1984-86)
74=Cherokee 2WD-4 Dr.(1984-86)
18=Cherokee 4 Dr.(1981-83)
77=Cherokee 4WD-2 Dr.(1984-86)
78=Cherokee 4WD-4 Dr.(1984-86)
85=CJ-5 (1981-83)
86=CJ-6(1981)
87=CJ-7(1981-86)
88=CJ-8, Scrambler(1981-86)
64=Comanche 2WD-6 Ft. Box(1986)
66=Comanche 2WD-7 Ft. Box(1986)
63=Comanche 4WD-6 Ft. Box(1986)
65=Comanche 4WD-7 Ft. Box(1986)
15=Grand Wagoneer 4 Dr.(1984-86)
25=J-10 Truck 7 Ft. Box(1981-84)
26=J10 Truck 8 Ft. Box(1981-86)
27=J-20 Truck 8 Ft. Box(1981-86)
15=Wagoneer 4 Dr.(1981-83)
75=Wagoneer 4WD-4 Dr.(1984-86)

BODY
CJ=CJ-5, CJ-6, CJ-7, CJ-8, Scrambler(1981-86)
MJ=Comanche Pickup(1986)

STYLES
SJ=Wagoneer(1981-83), Grand Wagoneer(1984-86), Cherokee(1981-83), J-10, J-20(1981-86)
XJ=Wagoneer(1984-86), Cherokee(1984-86)

AR = Use as Required - = Non Illustrated Part P.A.R. = Paint as Required

« RETURN TO GROUP INDEX

INSTRUMENT PANEL, WITH GUAGES WITHOUT TACHOMETER TYPE 1 XJ CHEROKEE, XJ WAGONEER, COMANCHE
Figure 8A-1300

81J 082 1300

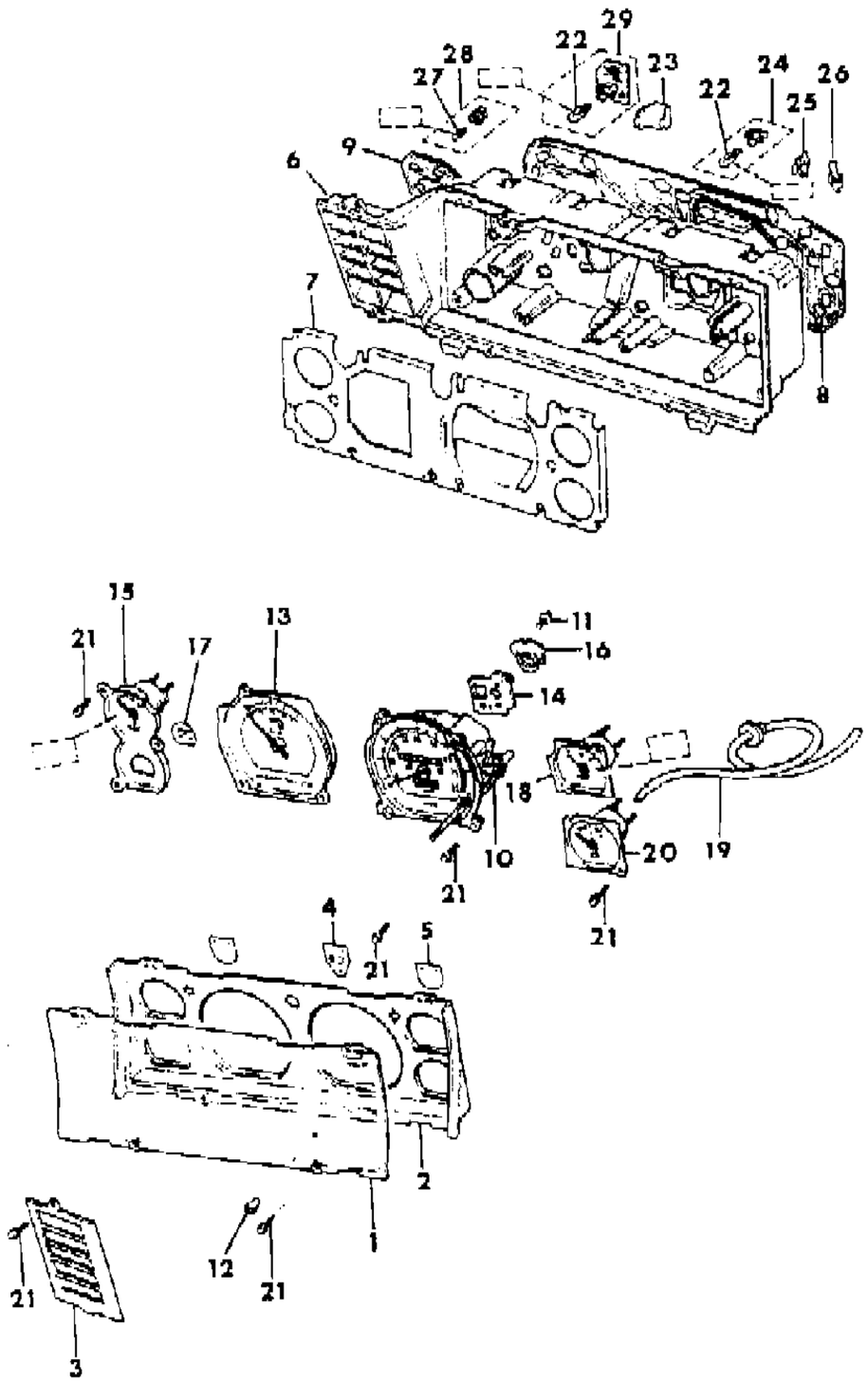

ITEM	PART NUMBER	QTY	BODY	MODEL	DESCRIPTION
1	8350 0292	1			LENS, Cluster
2					BEZEL, Cluster
	8350 0290	1			Gas
	8350 1551	1			Diesel
3					FILTER, Warning Lamp
					Gas
	8350 0490	1			1984
	8350 1568	1			1985-86, U.S.
	8350 1569	1			1985-86, Canada, EXPORT
	8350 1556	1			Diesel
4	8351 0021	1			FILTER, Headlamp Beam Lamp
5	8351 0020	1			FILTER, Turn Signal Lamp
6					HOUSING, Cluster
	8350 0281	1			Gas
	8350 1539	1			Diesel
7	8351 0022	1			FILTER, Cluster
8					CONDUCTOR, Printed Circuit ***
	8350 0320	1			Gas
	8350 1562	1			Diesel
9					CONDUCTOR, Printed Circuit ***
	8350 2278	1			Gas
	8350 0321	1			Diesel
10					SPEEDOMETER
	8350 0294	1			Miles
	8350 0297	1			Kilometers
11	8350 2026	1			SCREW
12	8350 0295	1			KNOB, Odometer
13					GAUGE, Fuel
					Gas
	8350 0298	1			U.S., Canada
	8350 0305	1			Non-Regulated Markets
	8350 1563	1			Diesel
14	8350 2025	1			GASKET
15					GAUGE, Temperature
					U.S.
	8350 0311	1			Gas
	8350 1560	1			Diesel
	8351 0184	1			Canada
16	8350 2024	1			RETAINER, Speedometer Cable

MODEL CODES

16=Cherokee 2 Dr.(1981-83)	78=Cherokee 4WD-4 Dr.(1984-86)	64=Comanche 2WD-6 Ft. Box(1986)	25=J-10 Truck 7 Ft. Box(1981-84)
17=Cherokee 2 Dr.(1981-83)	85=CJ-5 (1981-83)	66=Comanche 2WD-7 Ft. Box(1986)	26=J10 Truck 8 Ft. Box(1981-86)
73=Cherokee 2WD-2 Dr.(1984-86)	86=CJ-6(1981)	63=Comanche 4WD-6 Ft. Box(1986)	27=J-20 Truck 8 Ft. Box(1981-86)
74=Cherokee 2WD-4 Dr.(1984-86)	87=CJ-7(1981-86)	65=Comanche 4WD-7 Ft. Box(1986)	15=Wagoneer 4 Dr.(1981-83)
18=Cherokee 4 Dr.(1981-83)	88=CJ-8, Scrambler(1981-86)	15=Grand Wagoneer 4 Dr.(1984-86)	75=Wagoneer 4WD-4 Dr.(1984-86)
77=Cherokee 4WD-2 Dr.(1984-86)			

BODY
CJ=CJ-5, CJ-6, CJ-7, CJ-8, Scrambler(1981-86)
MJ=Comanche Pickup(1986)

STYLES
SJ=Wagoneer(1981-83), Grand Wagoneer(1984-86), Cherokee(1981-83), J-10, J-20(1981-86)
XJ=Wagoneer(1984-86), Cherokee(1984-86)

AR = Use as Required - = Non Illustrated Part P.A.R. = Paint as Required

INSTRUMENT PANEL, WITH GUAGES WITHOUT TACHOMETER TYPE 1 XJ CHEROKEE, XJ WAGONEER, COMANCHE
Figure 8A-1300

81J 082 1300

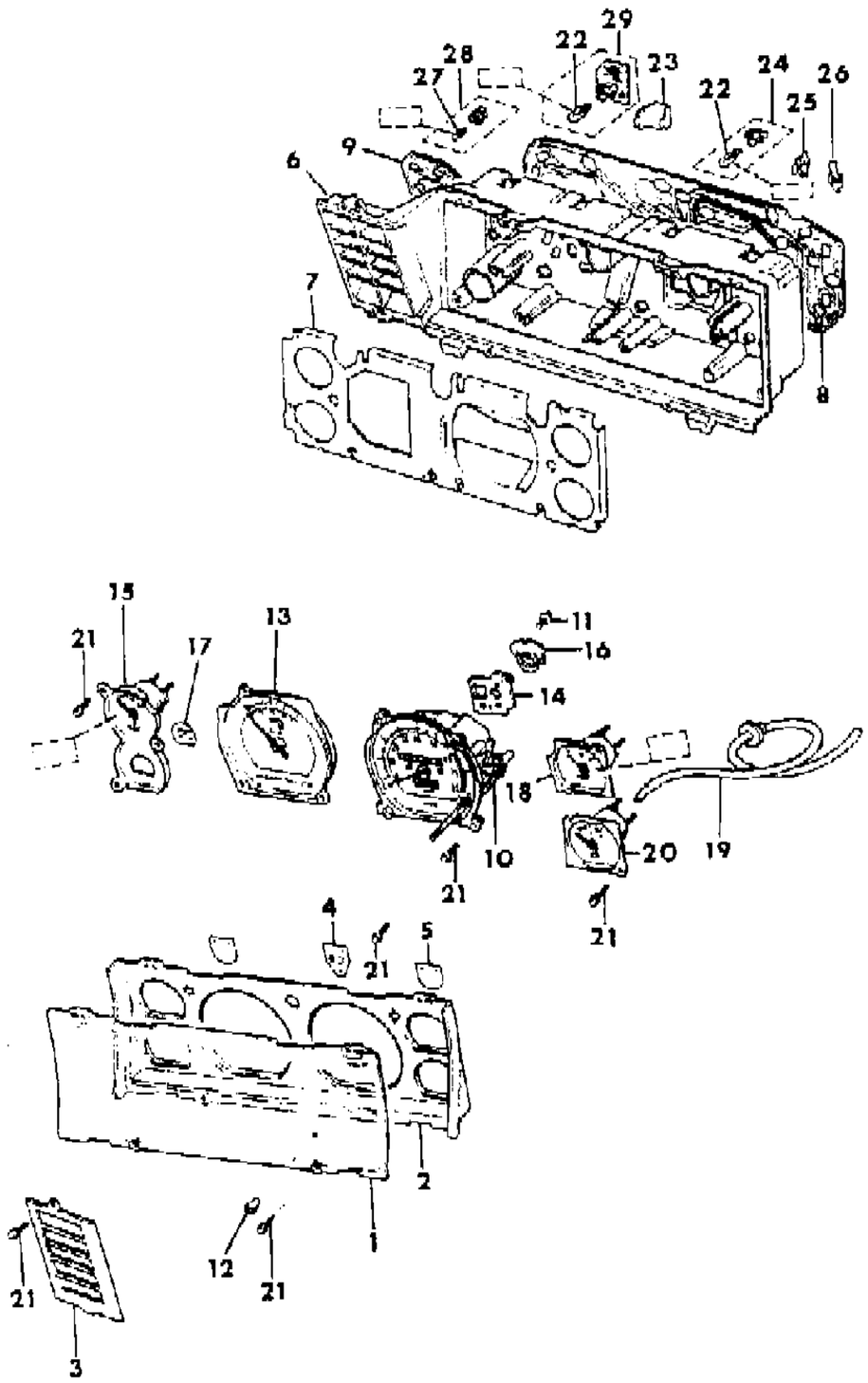

ITEM	PART NUMBER	QTY	BODY	MODEL	DESCRIPTION
17	8351 0030	1			FILTER, Low Fuel Warning Lamp
18					GAUGE, Oil
					Gas
	8350 0307	1			U.S.
	8351 0024	1			Canada
	8350 1565	1			Diesel
19	5600 1448	1			HOSE, Turbo Boost Gauge
20	8350 0318	1			VOLTMETER ***
	8350 1555	1			GAUGE, Turbo Boost
21	8351 0025	AR			SCREW
22					BULB
	J941 7561	AR			#161
	J448 8426	AR			#168
	J448 8025	AR			#194
23	5600 0627	1			SHIELD, Cluster
24					SOCKET
	8351 0037	AR			Black
	8351 0036	AR			Blue
	8350 0324	AR			Grey
25	8351 0026	AR			CLIP
26	8351 0027	AR			CLIP
27	J812 5723	AR			BULB
28					SOCKET
	8350 0325	AR			1984
	5600 1787	AR			1985-86
29	5600 0012	1			MODULE, Low Fuel Warning

MODEL CODES

16=Cherokee 2 Dr.(1981-83)
17=Cherokee 2 Dr.(1981-83)
73=Cherokee 2WD-2 Dr.(1984-86)
74=Cherokee 2WD-4 Dr.(1984-86)
18=Cherokee 4 Dr.(1981-83)
77=Cherokee 4WD-2 Dr.(1984-86)
78=Cherokee 4WD-4 Dr.(1984-86)
85=CJ-5 (1981-83)
86=CJ-6(1981)
87=CJ-7(1981-86)
88=CJ-8, Scrambler(1981-86)
64=Comanche 2WD-6 Ft. Box(1986)
66=Comanche 2WD-7 Ft. Box(1986)
63=Comanche 4WD-6 Ft. Box(1986)
65=Comanche 4WD-7 Ft. Box(1986)
15=Grand Wagoneer 4 Dr.(1984-86)
25=J-10 Truck 7 Ft. Box(1981-84)
26=J10 Truck 8 Ft. Box(1981-86)
27=J-20 Truck 8 Ft. Box(1981-86)
15=Wagoneer 4 Dr.(1981-83)
75=Wagoneer 4WD-4 Dr.(1984-86)

BODY
CJ=CJ-5, CJ-6, CJ-7, CJ-8, Scrambler(1981-86)
MJ=Comanche Pickup(1986)

STYLES
SJ=Wagoneer(1981-83), Grand Wagoneer(1984-86), Cherokee(1981-83), J-10, J-20(1981-86)
XJ=Wagoneer(1984-86), Cherokee(1984-86)

AR = Use as Required - = Non Illustrated Part P.A.R. = Paint as Required

« RETURN TO GROUP INDEX

INSTRUMENT PANEL, WITH GAUGES WITHOUT TACHOMETER TYPE 2 XJ CHEROKEE, XJ WAGONEER, COMANCHE
Figure 8A-1400

81J 082 1400

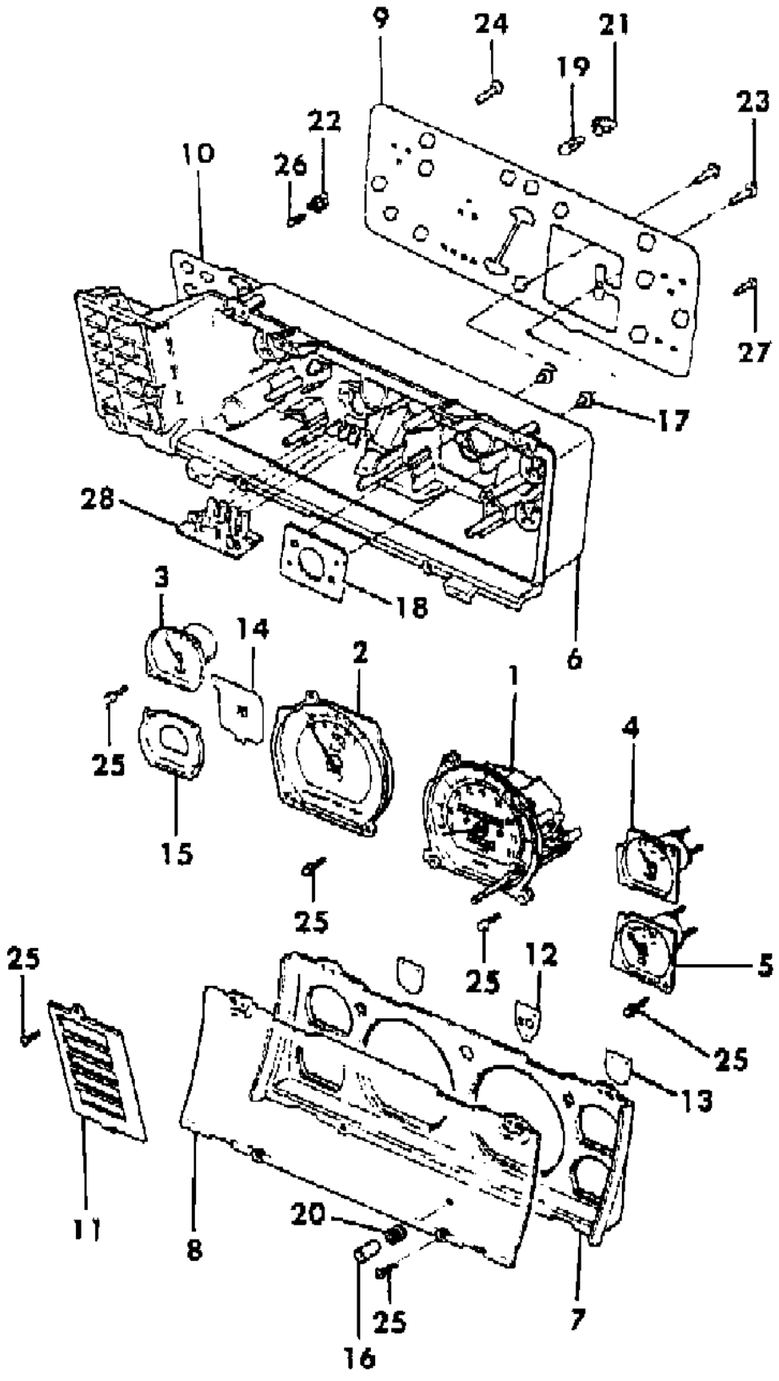

ITEM	PART NUMBER	QTY	BODY	MODEL	DESCRIPTION
1					SPEEDOMETER
	8350 4224	1			Miles
	8350 0225	1			Kilometers
2	8350 4234	1			GAUGE, Fuel
3					GAUGE, Temperature
	8350 4239	1			U.S.
	8350 4240	1			Canada, EXPORT
4					GAUGE, Oil
	8350 4243	1			U.S.
	8350 4244	1			Canada, EXPORT
5	8350 4247	1			VOLTMETER ***
6	8350 4251	1			HOUSING, Cluster
7	8350 4238	1			BEZEL, Cluster
8	8350 4255	1			LENS, Cluster
9	8350 4258	1			CONDUCTOR, Printed Circuit ***
10	8350 4262	1			CONDUCTOR, Printed Circuit ***
11					FILTER, Warning Lamp
	8350 4264	1			U.S.
	8350 4265	1			Canada/EXPORT
12	8350 4267	1			FILTER, Headlamp Beam Lamp
13	8350 4269	2			FILTER, Turn Signal Lamp
14	8350 4270	1			FILTER, Low Fuel Warning Lamp
15	8350 4282	1			BEZEL, Low Fuel Warning
16	8350 4273	1			KNOB, Odometer
17	8350 4274	1			BUSHING, Speedometer
18	8350 4275	1			GASKET
19	J448 8025	AR			BULB
20	8350 4276	1			GROMMET
21	J369 7186	AR			SOCKET
22	5600 1787	AR			SOCKET
23	8350 4277	4			SCREW
24	8350 4278	AR			SCREW
25	S016 1860	AR			SCREW
26	J812 5723	AR			BULB #74 ***
27	8350 4279	AR			SCREW
28	8350 4281	1			MODULE, Low Fuel Warning Lamp

MODEL CODES

16=Cherokee 2 Dr.(1981-83)
17=Cherokee 2 Dr.(1981-83)
73=Cherokee 2WD-2 Dr.(1984-86)
74=Cherokee 2WD-4 Dr.(1984-86)
18=Cherokee 4 Dr.(1981-83)
77=Cherokee 4WD-2 Dr.(1984-86)
78=Cherokee 4WD-4 Dr.(1984-86)
85=CJ-5 (1981-83)
86=CJ-6(1981)
87=CJ-7(1981-86)
88=CJ-8, Scrambler(1981-86)
64=Comanche 2WD-6 Ft. Box(1986)
66=Comanche 2WD-7 Ft. Box(1986)
63=Comanche 4WD-6 Ft. Box(1986)
65=Comanche 4WD-7 Ft. Box(1986)
15=Grand Wagoneer 4 Dr.(1984-86)
25=J-10 Truck 7 Ft. Box(1981-84)
26=J10 Truck 8 Ft. Box(1981-86)
27=J-20 Truck 8 Ft. Box(1981-86)
15=Wagoneer 4 Dr.(1981-83)
75=Wagoneer 4WD-4 Dr.(1984-86)

BODY
CJ=CJ-5, CJ-6, CJ-7, CJ-8, Scrambler(1981-86)
MJ=Comanche Pickup(1986)

STYLES
SJ=Wagoneer(1981-83), Grand Wagoneer(1984-86), Cherokee(1981-83), J-10, J-20(1981-86)
XJ=Wagoneer(1984-86), Cherokee(1984-86)

AR = Use as Required - = Non Illustrated Part P.A.R. = Paint as Required

« RETURN TO GROUP INDEX

INSTRUMENT CLUSTER WITH WARNING LAMPS TYPE 1 XJ CHEROKEE, XJ WAGONEER, COMANCHE
Figure 8A-1500

81J 082 1500

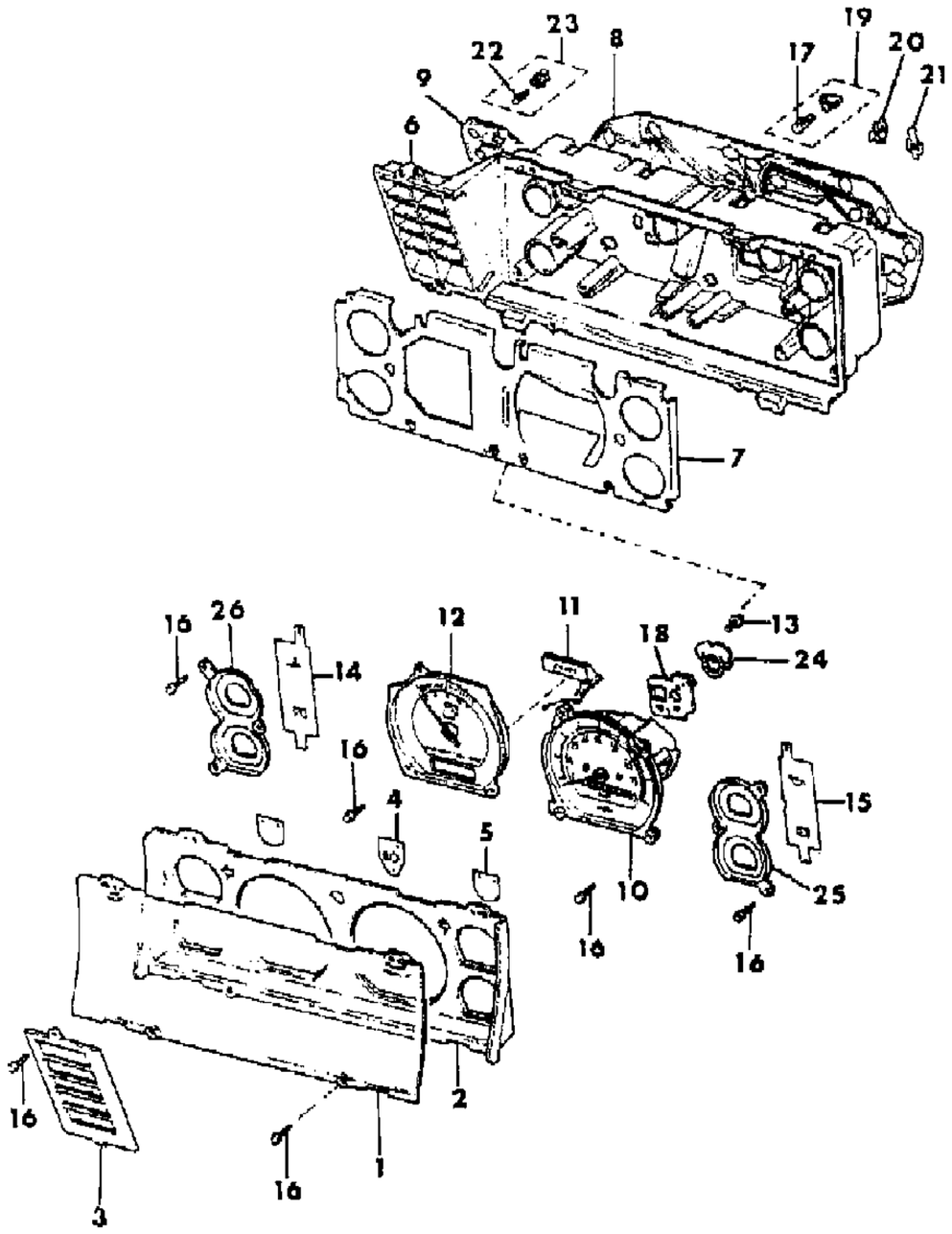

ITEM	PART NUMBER	QTY	BODY	MODEL	DESCRIPTION
1	8350 0291	1			LENS, Cluster
2	8350 0290	1			BEZEL, Cluster
3					FILTER, Warning Lamp
	8350 0490	1			1984
	8350 1568	1			1985-86 U.S.
	8350 1569	1			1985-86 Canada, EXPORT
4	8351 0021	1			FILTER, High Beam
5	8351 0020	2			FILTER, Turn Signal Lamp
6					HOUSING, Cluster
	8350 0283	1			With Floor Shift
	8350 3544	1			With Column Shift
7	8351 0022	1			FILTER, Cluster
8	8350 0319	1			CONDUCTOR, Printed Circuit ***
9	8350 0321	1			CONDUCTOR, Printed Circuit ***
10					SPEEDOMETER
	8350 0293	1			Miles
	8350 0296	1			Kilometers
11	8350 3545	1			DIAL, Shift ***
12					GAUGE, Fuel
					With Floor Shift
	8350 0298	1			U.S., Canada
	8350 0305	1			Non-Regulated Markets
					With Column Shift
	8350 3466	1			U.S., Canada
	8350 3467	1			Non-Regulated Markets
13	8350 2026	1			SCREW
14	8351 0028	1			FILTER, Temp./Low Fuel Lamps
15	8351 0029	1			FILTER, Oil/Voltage Lamps
16	8351 0025	AR			SCREW
17					BULB
	J941 7561	AR			#161
	J448 8426	AR			#168
	J448 8025	AR			#194
18	8350 2025	1			GASKET
19	8350 0324	AR			SOCKET
20	8351 0026	AR			CLIP
21	8351 0027	1			CLIP
22	J812 5723	AR			BULB #74
23					SOCKET

MODEL CODES

16=Cherokee 2 Dr.(1981-83)	78=Cherokee 4WD-4 Dr.(1984-86)	64=Comanche 2WD-6 Ft. Box(1986)	25=J-10 Truck 7 Ft. Box(1981-84)
17=Cherokee 2 Dr.(1981-83)	85=CJ-5 (1981-83)	66=Comanche 2WD-7 Ft. Box(1986)	26=J10 Truck 8 Ft. Box(1981-86)
73=Cherokee 2WD-2 Dr.(1984-86)	86=CJ-6(1981)	63=Comanche 4WD-6 Ft. Box(1986)	27=J-20 Truck 8 Ft. Box(1981-86)
74=Cherokee 2WD-4 Dr.(1984-86)	87=CJ-7(1981-86)	65=Comanche 4WD-7 Ft. Box(1986)	15=Wagoneer 4 Dr.(1981-83)
18=Cherokee 4 Dr.(1981-83)	88=CJ-8, Scrambler(1981-86)	15=Grand Wagoneer 4 Dr.(1984-86)	75=Wagoneer 4WD-4 Dr.(1984-86)
77=Cherokee 4WD-2 Dr.(1984-86)			

BODY
CJ=CJ-5, CJ-6, CJ-7, CJ-8, Scrambler(1981-86)
MJ=Comanche Pickup(1986)

STYLES
SJ=Wagoneer(1981-83), Grand Wagoneer(1984-86), Cherokee(1981-83), J-10, J-20(1981-86)
XJ=Wagoneer(1984-86), Cherokee(1984-86)

AR = Use as Required - = Non Illustrated Part P.A.R. = Paint as Required

« RETURN TO GROUP INDEX »

INSTRUMENT CLUSTER WITH WARNING LAMPS TYPE 1 XJ CHEROKEE, XJ WAGONEER, COMANCHE
Figure 8A-1500

81J 082 1500

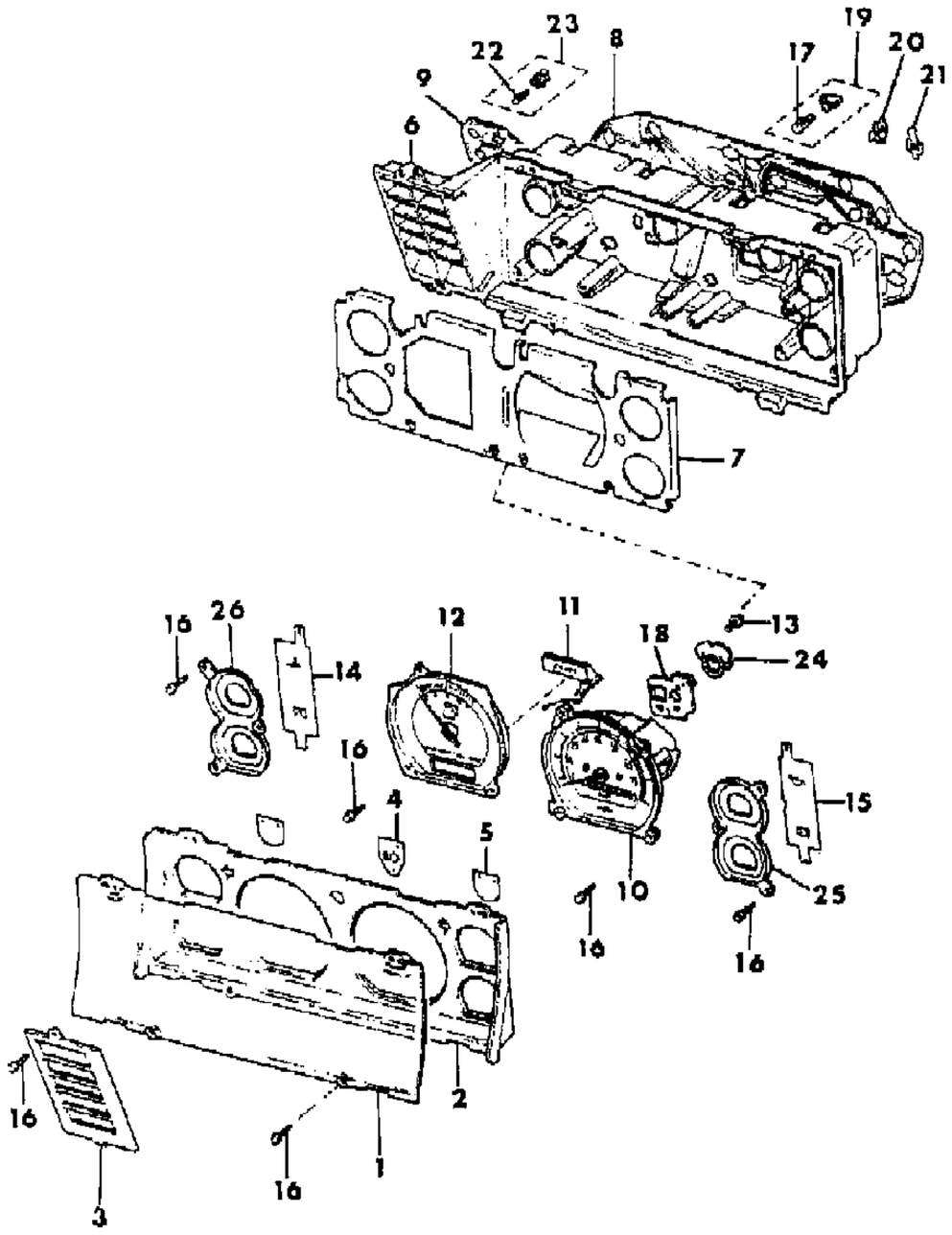

ITEM	PART NUMBER	QTY	BODY	MODEL	DESCRIPTION
	8350 0325	AR			1984
	5600 1787	AR			1985-86
24	8350 2024	1			RETAINER, Speedometer Cable
25	8350 1593	1			BEZEL, Cluster
26	8350 1592	1			BEZEL, Cluster

MODEL CODES

16=Cherokee 2 Dr.(1981-83)
17=Cherokee 2 Dr.(1981-83)
73=Cherokee 2WD-2 Dr.(1984-86)
74=Cherokee 2WD-4 Dr.(1984-86)
18=Cherokee 4 Dr.(1981-83)
77=Cherokee 4WD-2 Dr.(1984-86)
78=Cherokee 4WD-4 Dr.(1984-86)
85=CJ-5 (1981-83)
86=CJ-6(1981)
87=CJ-7(1981-86)
88=CJ-8, Scrambler(1981-86)
64=Comanche 2WD-6 Ft. Box(1986)
66=Comanche 2WD-7 Ft. Box(1986)
63=Comanche 4WD-6 Ft. Box(1986)
65=Comanche 4WD-7 Ft. Box(1986)
15=Grand Wagoneer 4 Dr.(1984-86)
25=J-10 Truck 7 Ft. Box(1981-84)
26=J10 Truck 8 Ft. Box(1981-86)
27=J-20 Truck 8 Ft. Box(1981-86)
15=Wagoneer 4 Dr.(1981-83)
75=Wagoneer 4WD-4 Dr.(1984-86)

BODY
CJ=CJ-5, CJ-6, CJ-7, CJ-8, Scrambler(1981-86)
MJ=Comanche Pickup(1986)

STYLES
SJ=Wagoneer(1981-83), Grand Wagoneer(1984-86), Cherokee(1981-83), J-10, J-20(1981-86)
XJ=Wagoneer(1984-86), Cherokee(1984-86)

AR = Use as Required - = Non Illustrated Part P.A.R. = Paint as Required

INSTRUMENT CLUSTER WITH WARNING LAMPS TYPE 2 XJ CHEROKEE, XJ WAGONEER, COMANCHE
Figure 8A-1600

81J 082 1600

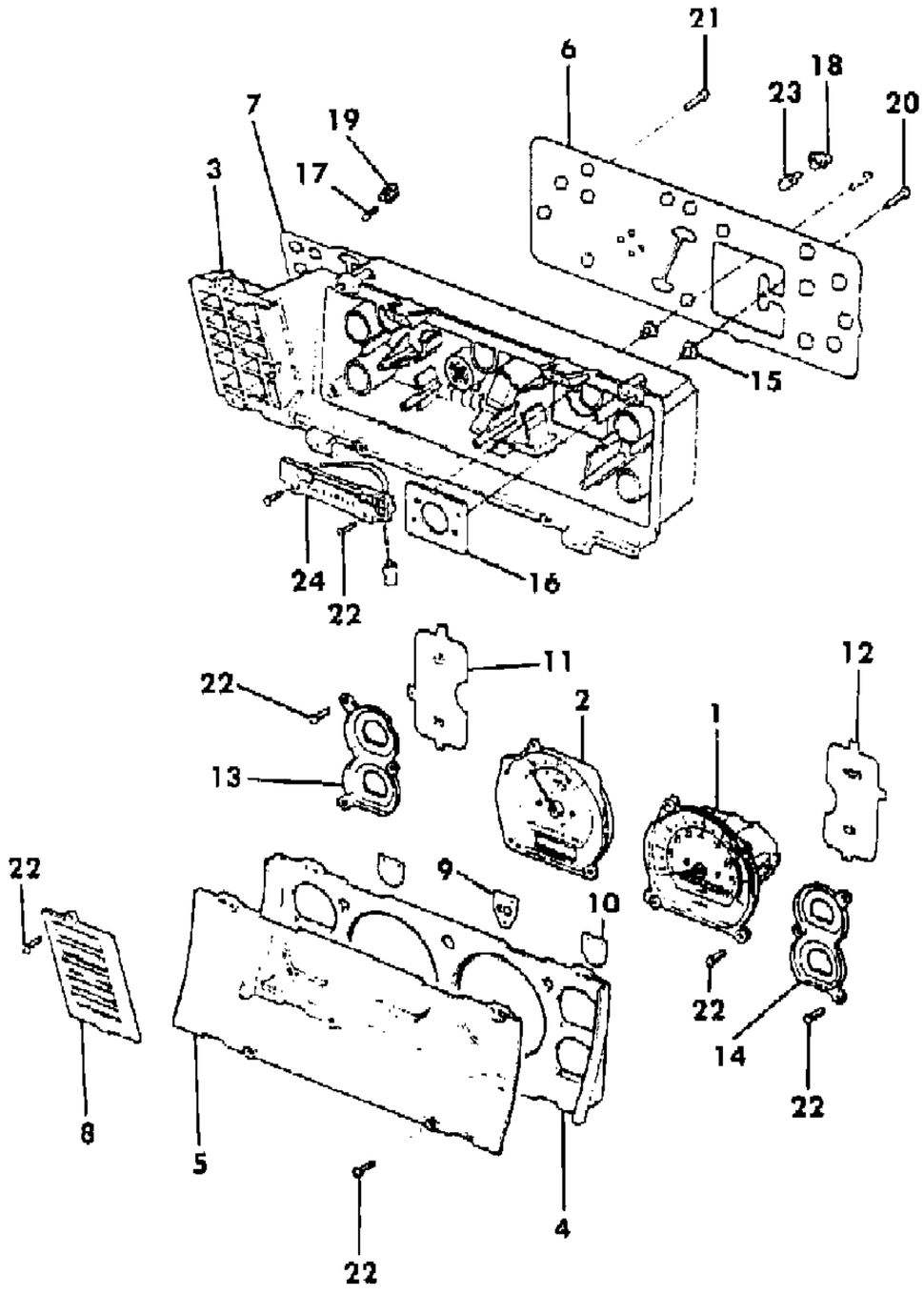

ITEM	PART NUMBER	QTY	BODY	MODEL	DESCRIPTION
1					SPEEDOMETER
	8350 4226	1			Miles
	8350 4227	1			Kilometers
2					GAUGE, Fuel
					With Floor Shift
	8350 4234	1			U.S., Canada
	8350 4393	1			Non-Regulated Markets
					With Column Shift
	8350 4236	1			U.S., Canada
	8350 4237	1			Non-Regulated Markets
3					HOUSING, Cluster
	8350 4252	1			With Floor Shift
	8350 4253	1			With Column Shift
4	8350 4238	1			BEZEL, Cluster
5	8350 4256	1			LENS, Cluster
6					CONDUCTOR, Printed Circuit ***
	8350 4259	1			With Floor Shift
	8350 4260	1			With Column Shift
7	8350 4263	1			CONDUCTOR, Printed Circuit ***
8					FILTER, Warning Lamp
	8350 4264	1			U.S.
	8350 4265	1			Canada, Non-Regulated Markets
9	8350 4267	1			FILTER, High Beam
10	8350 4269	2			FILTER, Turn Signal Lamp
11	8350 4271	1			FILTER
12	8350 4272	1			FILTER, Cluster
13	8350 4284	1			BEZEL, Temperature
14	8350 4285	1			BEZEL, Cluster
15	8350 4274	2			BUSHING
16	8350 4275	1			GASKET
17	J812 5723	AR			BULB #74 ***
18	J448 8025	AR			SOCKET
19	5600 1787	AR			SOCKET
20	8350 4277	AR			SCREW
21	8350 4278	AR			SCREW
22	S016 1860	AR			SCREW
23	J448 8025	AR			BULB #194 ***
24	8350 4235	1			DIAL, Shift ***

MODEL CODES

16=Cherokee 2 Dr.(1981-83)
17=Cherokee 2 Dr.(1981-83)
73=Cherokee 2WD-2 Dr.(1984-86)
74=Cherokee 2WD-4 Dr.(1984-86)
18=Cherokee 4 Dr.(1981-83)
77=Cherokee 4WD-2 Dr.(1984-86)
78=Cherokee 4WD-4 Dr.(1984-86)
85=CJ-5 (1981-83)
86=CJ-6(1981)
87=CJ-7(1981-86)
88=CJ-8, Scrambler(1981-86)
64=Comanche 2WD-6 Ft. Box(1986)
66=Comanche 2WD-7 Ft. Box(1986)
63=Comanche 4WD-6 Ft. Box(1986)
65=Comanche 4WD-7 Ft. Box(1986)
15=Grand Wagoneer 4 Dr.(1984-86)
25=J-10 Truck 7 Ft. Box(1981-84)
26=J10 Truck 8 Ft. Box(1981-86)
27=J-20 Truck 8 Ft. Box(1981-86)
15=Wagoneer 4 Dr.(1981-83)
75=Wagoneer 4WD-4 Dr.(1984-86)

BODY
CJ=CJ-5, CJ-6, CJ-7, CJ-8, Scrambler(1981-86)
MJ=Comanche Pickup(1986)

STYLES
SJ=Wagoneer(1981-83), Grand Wagoneer(1984-86), Cherokee(1981-83), J-10, J-20(1981-86)
XJ=Wagoneer(1984-86), Cherokee(1984-86)

AR = Use as Required - = Non Illustrated Part P.A.R. = Paint as Required

« RETURN TO GROUP INDEX

INSTRUMENT CLUSTER WITH GAUGES, TACHOMETER TYPE 1, EXCEPT LIMITED XJ CHEROKEE, XJ WAGONEER, COMANCHE
Figure 8A-1700

81J 082 1700

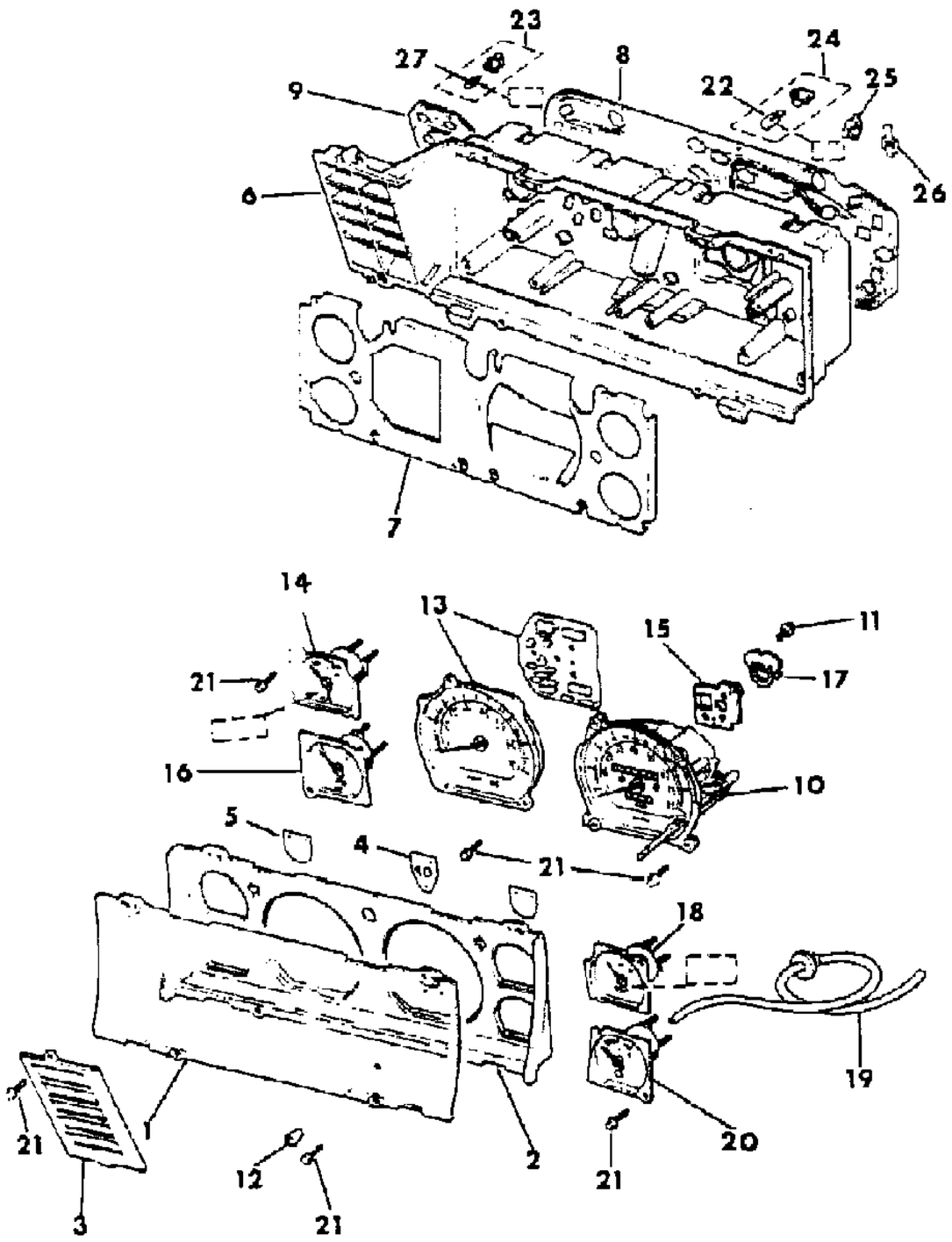

ITEM	PART NUMBER	QTY	BODY	MODEL	DESCRIPTION
1	8350 0292	1			LENS, Cluster
2					BEZEL, Cluster
	8350 0290	1			Gas
	8350 1551	1			Diesel
3					FILTER, Warning Lamps
					Gas
	8350 0490	1			1984
	8350 1568	1			1985-86. U.S.
	8350 1569	1			1985-86, Canada
					Diesel
	8350 1556	1			U.S.
	8350 1557	1			Canada, EXPORT
4	8351 0021	1			FILTER, High Beam Lamp
5	8351 0020	2			FILTER, Turn Signal Lamp
6					HOUSING, Cluster
	8350 0282	1			Gas
	8350 1554	1			Diesel
7	8350 1022	1			FILTER, Cluster
8					CONDUCTOR, Printed Circuit ***
	8350 0328	1			Gas
	8350 1561	1			Diesel
9					CONDUCTOR, Printed Circuit ***
	8350 2278	1			Gas
	8350 0321	1			Diesel
10					SPEEDOMETER
	8350 0294	1			Miles
	8350 0297	1			Kilometers
11	8350 2026	1			SCREW
12	8350 0295	1			KNOB, Odometer
13					TACHOMETER
					Gas
	8350 0308	1			Four Cylinder
	8350 0309	1			Six Cylinder
	8350 1567	1			Diesel
14					GAUGE, Temperature
					Gas
	8350 0310	1			U.S.
	8351 0023	1			Canada
					Diesel

MODEL CODES
16=Cherokee 2 Dr.(1981-83)
17=Cherokee 2 Dr.(1981-83)
73=Cherokee 2WD-2 Dr.(1984-86)
74=Cherokee 2WD-4 Dr.(1984-86)
18=Cherokee 4 Dr.(1981-83)
77=Cherokee 4WD-2 Dr.(1984-86)
78=Cherokee 4WD-4 Dr.(1984-86)
85=CJ-5 (1981-83)
86=CJ-6(1981)
87=CJ-7(1981-86)
88=CJ-8, Scrambler(1981-86)
64=Comanche 2WD-6 Ft. Box(1986)
66=Comanche 2WD-7 Ft. Box(1986)
63=Comanche 4WD-6 Ft. Box(1986)
65=Comanche 4WD-7 Ft. Box(1986)
15=Grand Wagoneer 4 Dr.(1984-86)
25=J-10 Truck 7 Ft. Box(1981-84)
26=J10 Truck 8 Ft. Box(1981-86)
27=J-20 Truck 8 Ft. Box(1981-86)
15=Wagoneer 4 Dr.(1981-83)
75=Wagoneer 4WD-4 Dr.(1984-86)

BODY
CJ=CJ-5, CJ-6, CJ-7, CJ-8, Scrambler(1981-86)
MJ=Comanche Pickup(1986)

STYLES
SJ=Wagoneer(1981-83), Grand Wagoneer(1984-86), Cherokee(1981-83), J-10, J-20(1981-86)
XJ=Wagoneer(1984-86), Cherokee(1984-86)

AR = Use as Required - = Non Illustrated Part P.A.R. = Paint as Required

« RETURN TO GROUP INDEX »

INSTRUMENT CLUSTER WITH GAUGES, TACHOMETER TYPE 1, EXCEPT LIMITED XJ CHEROKEE, XJ WAGONEER, COMANCHE
Figure 8A-1700

81J 082 1700

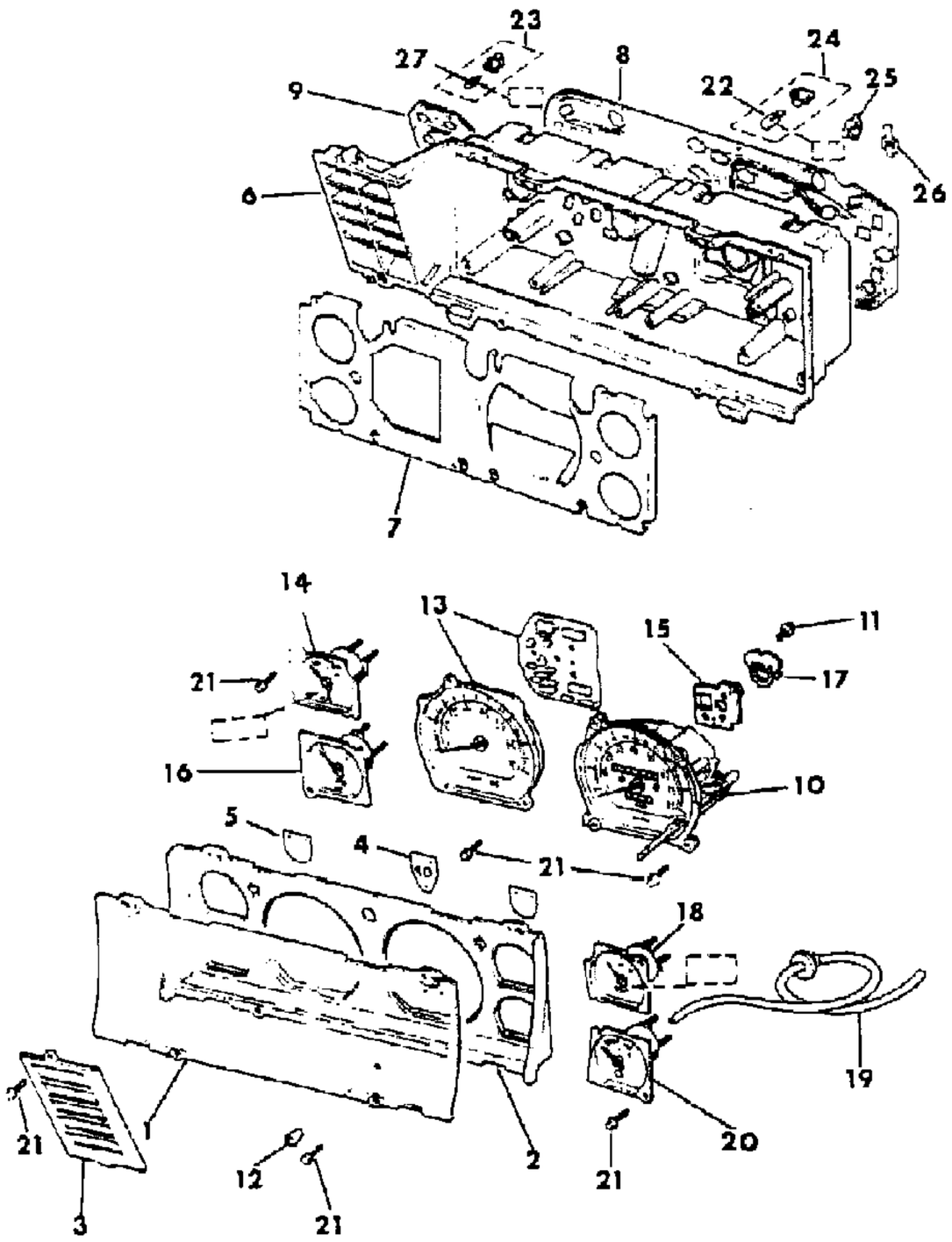

ITEM	PART NUMBER	QTY	BODY	MODEL	DESCRIPTION
	8350 1559	1			U.S.
	8350 1558	1			Canada, EXPORT
15	8350 2025	1			GASKET
16					GAUGE, Fuel
					Gas
	8350 0302	1			U.S., Canada, Economic Commission of Europe
	8350 0306	1			Non-Regulated Markets
	8350 1564	1			Diesel
17	8350 2024	1			RETAINER, Speedometer Cable
18					GAUGE, Oil
					Gas
	8350 0307	1			U.S.
	8351 0024	1			Canada
					Diesel
	8350 1565	1			U.S.
	8350 1566	1			Canada, EXPORT
19	5600 1448	1			HOSE, Turbo Boost Gauge
20	8350 0318	1			VOLTMETER ***
	8350 1555	1			GAUGE, Turbo Boost
21	8351 0025	AR			SCREW
22					BULB
	J941 7561	AR			#161
	J448 8426	AR			#168
	J448 8025	AR			#194
23					SOCKET
	8350 0325	AR			1984
	5600 1787	AR			1985-86
24	8350 0324	AR			SOCKET
25	8351 0026	AR			CLIP
26	8351 0027	1			CLIP
27	J812 5723	AR			BULB #74 ***

MODEL CODES
16=Cherokee 2 Dr.(1981-83)
17=Cherokee 2 Dr.(1981-83)
73=Cherokee 2WD-2 Dr.(1984-86)
74=Cherokee 2WD-4 Dr.(1984-86)
18=Cherokee 4 Dr.(1981-83)
77=Cherokee 4WD-2 Dr.(1984-86)
78=Cherokee 4WD-4 Dr.(1984-86)
85=CJ-5 (1981-83)
86=CJ-6(1981)
87=CJ-7(1981-86)
88=CJ-8, Scrambler(1981-86)
64=Comanche 2WD-6 Ft. Box(1986)
66=Comanche 2WD-7 Ft. Box(1986)
63=Comanche 4WD-6 Ft. Box(1986)
65=Comanche 4WD-7 Ft. Box(1986)
15=Grand Wagoneer 4 Dr.(1984-86)
25=J-10 Truck 7 Ft. Box(1981-84)
26=J10 Truck 8 Ft. Box(1981-86)
27=J-20 Truck 8 Ft. Box(1981-86)
15=Wagoneer 4 Dr.(1981-83)
75=Wagoneer 4WD-4 Dr.(1984-86)

BODY
CJ=CJ-5, CJ-6, CJ-7, CJ-8, Scrambler(1981-86)
MJ=Comanche Pickup(1986)

STYLES
SJ=Wagoneer(1981-83), Grand Wagoneer(1984-86), Cherokee(1981-83), J-10, J-20(1981-86)
XJ=Wagoneer(1984-86), Cherokee(1984-86)

AR = Use as Required - = Non Illustrated Part P.A.R. = Paint as Required

« RETURN TO GROUP INDEX

INSTRUMENT CLUSTER WITH GAUGES, TACHOMETER TYPE 2 XJ CHEROKEE, XJ WAGONEER, COMANCHE
Figure 8A-1800

81J 082 1800

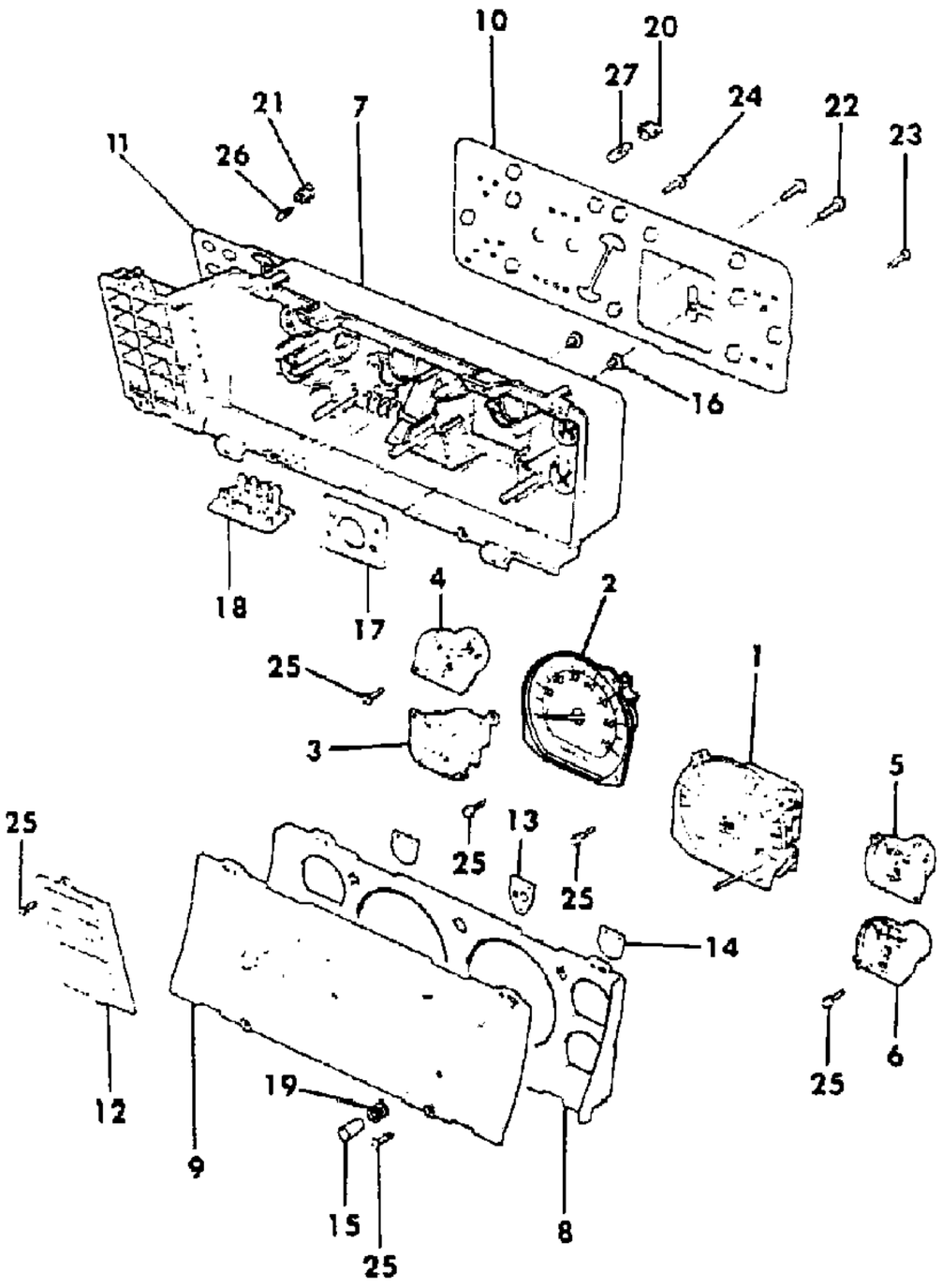

ITEM	PART NUMBER	QTY	BODY	MODEL	DESCRIPTION
1					SPEEDOMETER
	8350 4224	1			Miles
	8350 4225	1			Kilometers
2					TACHOMETER
					Gas
	8350 4229	1			Four Cylinder
	8350 4228	1			Six Cylinder
	8350 4230	1			Diesel
3					GAUGE, Fuel
					Gas
	8350 4231	1			U.S., Canada
	8350 4232	1			Non-Regulated Markets
	8350 4233	1			Diesel
4					GAUGE, Temperature
					Gas
	8350 4239	1			U.S.
	8350 4240	1			Canada, EXPORT
					Diesel
	8350 4241	1			U.S.
	8350 4242	1			Canada, EXPORT
5					GAUGE, Oil
					Gas
	8350 4243	1			U.S.
	8350 4244	1			Canada, EXPORT
					Diesel
	8350 4245	1			U.S.
	8350 4246	1			Canada, EXPORT
6	8350 4247	1			VOLTMETER ***
	8350 4248	1			GAUGE, Turbo Boost
7					HOUSING, Cluster
	8350 4249	1			Gas
	8350 4254	1			Diesel
8	8350 4238	1			BEZEL, Cluster
9	8350 4255	1			LENS, Cluster
10					CONDUCTOR, Printed Circuit ***
	8350 4257	1			Gas
	8350 4261	1			Diesel
11					CONDUCTOR, Printed Circuit ***
	8350 4262	1			Gas

MODEL CODES

16=Cherokee 2 Dr.(1981-83)
17=Cherokee 2 Dr.(1981-83)
73=Cherokee 2WD-2 Dr.(1984-86)
74=Cherokee 2WD-4 Dr.(1984-86)
18=Cherokee 4 Dr.(1981-83)
77=Cherokee 4WD-2 Dr.(1984-86)
78=Cherokee 4WD-4 Dr.(1984-86)
85=CJ-5 (1981-83)
86=CJ-6(1981)
87=CJ-7(1981-86)
88=CJ-8, Scrambler(1981-86)
64=Comanche 2WD-6 Ft. Box(1986)
66=Comanche 2WD-7 Ft. Box(1986)
63=Comanche 4WD-6 Ft. Box(1986)
65=Comanche 4WD-7 Ft. Box(1986)
15=Grand Wagoneer 4 Dr.(1984-86)
25=J-10 Truck 7 Ft. Box(1981-84)
26=J10 Truck 8 Ft. Box(1981-86)
27=J-20 Truck 8 Ft. Box(1981-86)
15=Wagoneer 4 Dr.(1981-83)
75=Wagoneer 4WD-4 Dr.(1984-86)

BODY
CJ=CJ-5, CJ-6, CJ-7, CJ-8, Scrambler(1981-86)
MJ=Comanche Pickup(1986)

STYLES
SJ=Wagoneer(1981-83), Grand Wagoneer(1984-86), Cherokee(1981-83), J-10, J-20(1981-86)
XJ=Wagoneer(1984-86), Cherokee(1984-86)

AR = Use as Required - = Non Illustrated Part P.A.R. = Paint as Required

« RETURN TO GROUP INDEX »

INSTRUMENT CLUSTER WITH GAUGES, TACHOMETER TYPE 2 XJ CHEROKEE, XJ WAGONEER, COMANCHE
Figure 8A-1800

81J 082 1800

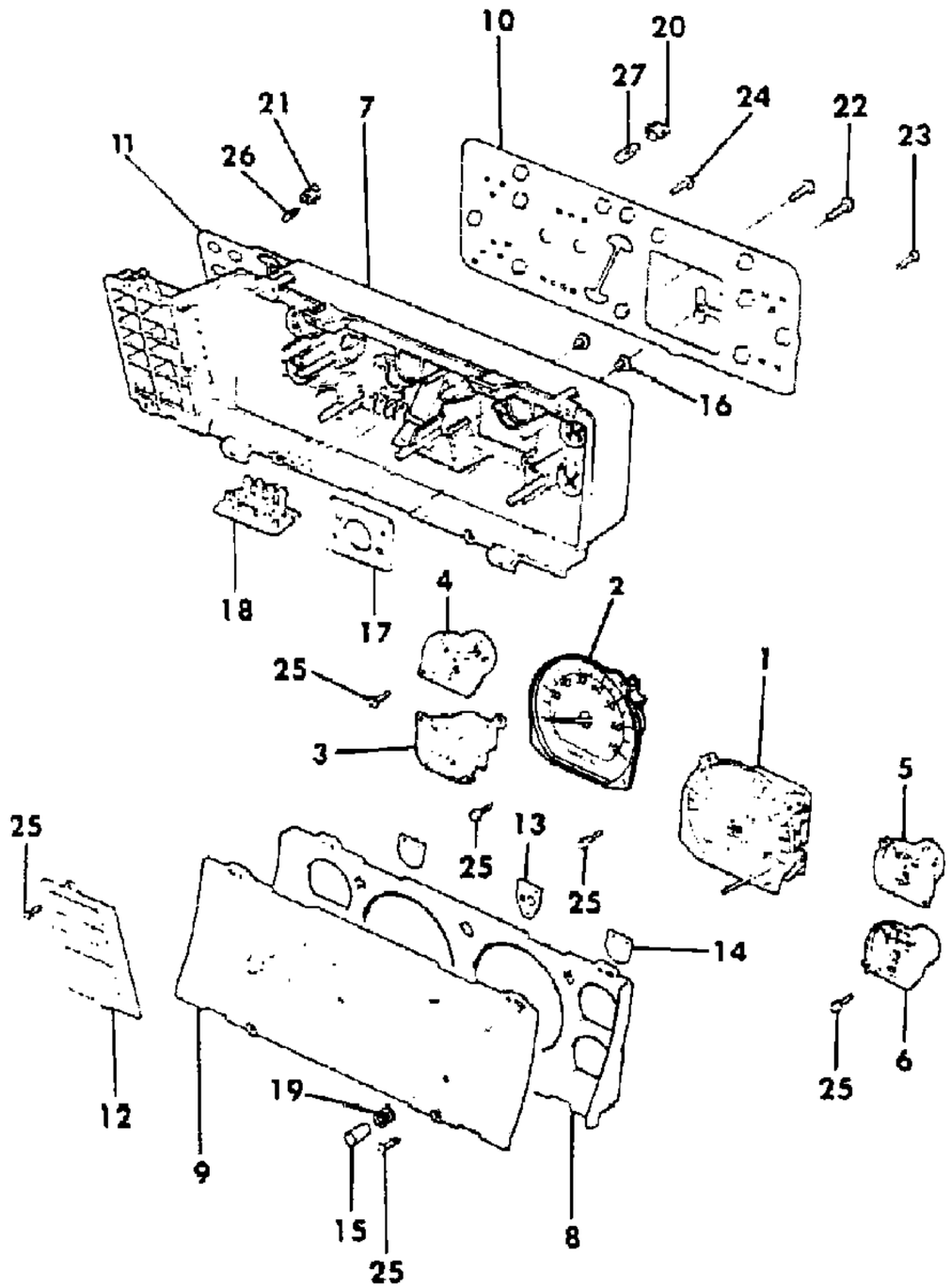

ITEM	PART NUMBER	QTY	BODY	MODEL	DESCRIPTION
	8350 4263	1			Diesel
12					FILTER, Warning Lamp
					Gas
	8350 4264	1			U.S.
	8350 4265	1			Canada, EXPORT
					Diesel
	8350 4266	1			U.S.
	8350 4268	1			Canada, EXPORT
13	8350 4267	1			FILTER, High Beam Lamp
14	8350 4269	1			FILTER, Turn Signal Lamp
15	8350 4273	1			KNOB, Odometer
16	8350 4274	1			BUSHING, Speedometer
17	8350 4275	1			GASKET
18	8350 4280	1			MODULE, Low Fuel Warning Lamp
19	8350 4276	1			GROMMET
20	J369 7186	AR			SOCKET
21	5600 1787	AR			SOCKET
22	8350 4277	4			SCREW
23	8350 4278	AR			SCREW
24	8350 4279	AR			SCREW
25	S016 1860	AR			SCREW
26	J812 5723	AR			BULB #74
27	J448 8025	AR			BULB #194 ***

MODEL CODES

16=Cherokee 2 Dr.(1981-83)
17=Cherokee 2 Dr.(1981-83)
73=Cherokee 2WD-2 Dr.(1984-86)
74=Cherokee 2WD-4 Dr.(1984-86)
18=Cherokee 4 Dr.(1981-83)
77=Cherokee 4WD-2 Dr.(1984-86)
78=Cherokee 4WD-4 Dr.(1984-86)
85=CJ-5 (1981-83)
86=CJ-6(1981)
87=CJ-7(1981-86)
88=CJ-8, Scrambler(1981-86)
64=Comanche 2WD-6 Ft. Box(1986)
66=Comanche 2WD-7 Ft. Box(1986)
63=Comanche 4WD-6 Ft. Box(1986)
65=Comanche 4WD-7 Ft. Box(1986)
15=Grand Wagoneer 4 Dr.(1984-86)
25=J-10 Truck 7 Ft. Box(1981-84)
26=J10 Truck 8 Ft. Box(1981-86)
27=J-20 Truck 8 Ft. Box(1981-86)
15=Wagoneer 4 Dr.(1981-83)
75=Wagoneer 4WD-4 Dr.(1984-86)

BODY
CJ=CJ-5, CJ-6, CJ-7, CJ-8, Scrambler(1981-86)
MJ=Comanche Pickup(1986)

STYLES
SJ=Wagoneer(1981-83), Grand Wagoneer(1984-86), Cherokee(1981-83), J-10, J-20(1981-86)
XJ=Wagoneer(1984-86), Cherokee(1984-86)

AR = Use as Required - = Non Illustrated Part P.A.R. = Paint as Required

« RETURN TO GROUP INDEX

INSTRUMENT CLUSTER WITH GAUGES, TACHOMETER, LIMITED XJ CHEROKEE
Figure 8A-1900

81J 082 1900

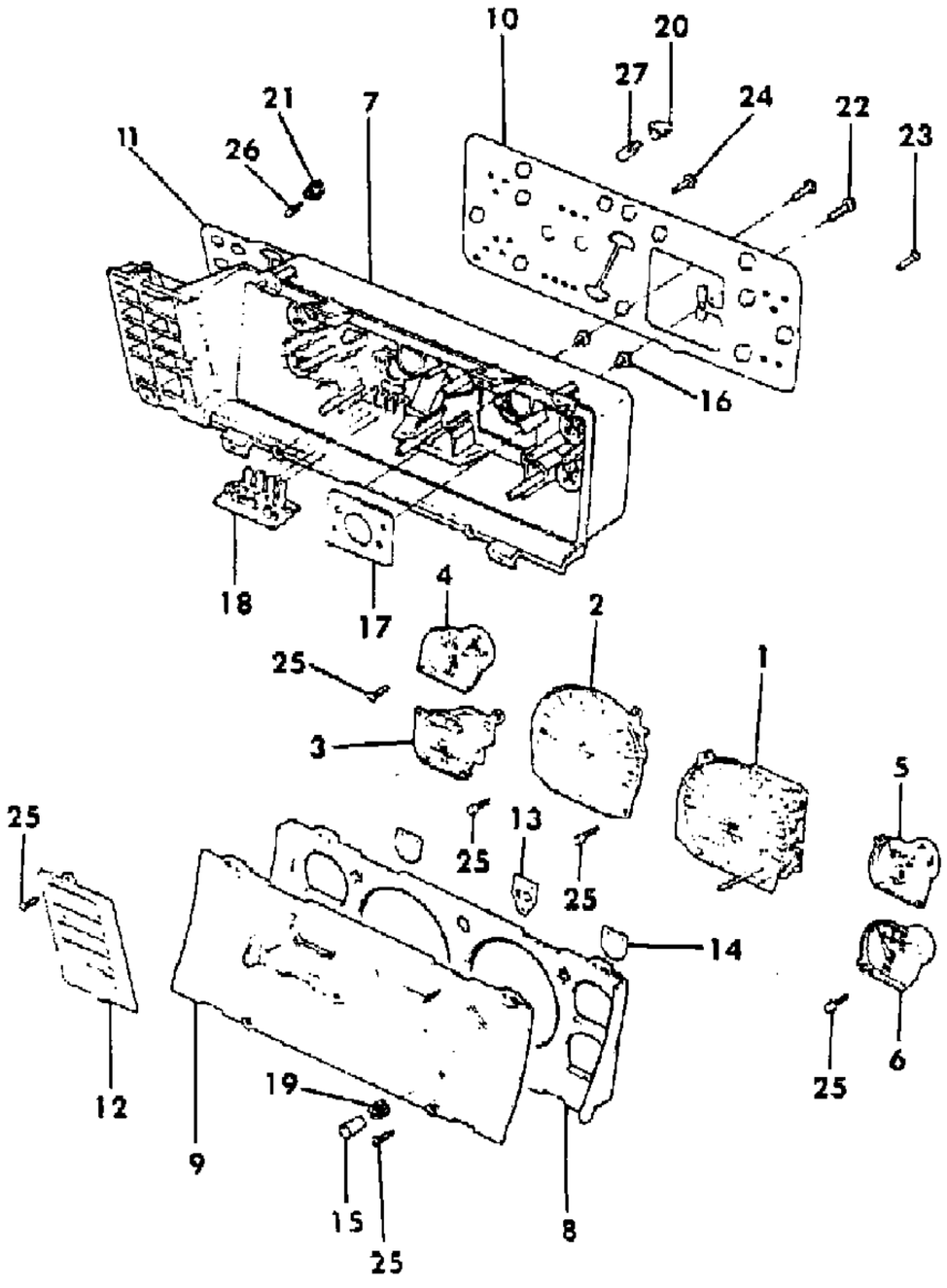

ITEM	PART NUMBER	QTY	BODY	MODEL	DESCRIPTION
1					SPEEDOMETER
	8350 4456	1			Miles
	8350 4457	1			Kilometers
2	8350 4458	1			TACHOMETER
3					GAUGE, Fuel
	8350 4459	1			U.S.
	8350 4460	1			Canada
4					GAUGE, Temperature
	8350 4461	1			U.S.
	8350 4462	1			Canada
5					GAUGE, Oil
	8350 4463	1			U.S.
	8350 4464	1			Canada
6	8350 4465	1			VOLTMETER ***
7	8350 4249	1			HOUSING, Cluster
8	8350 4466	1			BEZEL, Cluster
9	8350 4255	1			LENS, Cluster
10	8350 4257	1			CONDUCTOR, Printed Circuit ***
11	8350 4262	1			CONDUCTOR, Printed Circuit ***
12					FILTER, Warning Lamp
	8350 4264	1			U.S.
	8350 4265	1			Canada
13	8350 4267	1			FILTER, High Beam Lamp
14	8350 4269	2			FILTER, Turn Signal Lamp
15	8350 4273	1			KNOB, Odometer
16	8350 4274	1			BUSHING, Speedometer
17	8350 4275	1			GASKET
18	8350 4280	1			MODULE, Low Fuel Warning Lamp
19	8350 4276	1			GROMMET
20	J369 7186	AR			SOCKET
21	5600 1787	AR			SOCKET
22	8350 4277	AR			SCREW
23	8350 4278	AR			SCREW
24	8350 4279	AR			SCREW
25	S016 1860	AR			SCREW
26	J812 5723	AR			BULB #74 ***
27	J448 8025	AR			BULB #194 ***

MODEL CODES

16=Cherokee 2 Dr.(1981-83)
17=Cherokee 2 Dr.(1981-83)
73=Cherokee 2WD-2 Dr.(1984-86)
74=Cherokee 2WD-4 Dr.(1984-86)
18=Cherokee 4 Dr.(1981-83)
77=Cherokee 4WD-2 Dr.(1984-86)
78=Cherokee 4WD-4 Dr.(1984-86)
85=CJ-5 (1981-83)
86=CJ-6(1981)
87=CJ-7(1981-86)
88=CJ-8, Scrambler(1981-86)
64=Comanche 2WD-6 Ft. Box(1986)
66=Comanche 2WD-7 Ft. Box(1986)
63=Comanche 4WD-6 Ft. Box(1986)
65=Comanche 4WD-7 Ft. Box(1986)
15=Grand Wagoneer 4 Dr.(1984-86)
25=J-10 Truck 7 Ft. Box(1981-84)
26=J10 Truck 8 Ft. Box(1981-86)
27=J-20 Truck 8 Ft. Box(1981-86)
15=Wagoneer 4 Dr.(1981-83)
75=Wagoneer 4WD-4 Dr.(1984-86)

BODY
CJ=CJ-5, CJ-6, CJ-7, CJ-8, Scrambler(1981-86)
MJ=Comanche Pickup(1986)

STYLES
SJ=Wagoneer(1981-83), Grand Wagoneer(1984-86), Cherokee(1981-83), J-10, J-20(1981-86)
XJ=Wagoneer(1984-86), Cherokee(1984-86)

AR = Use as Required - = Non Illustrated Part P.A.R. = Paint as Required

« RETURN TO GROUP INDEX

FUSE PANEL XJ CHEROKEE, XJ WAGONEER, COMANCHE
Figure 8A-2000

81J 082 2000

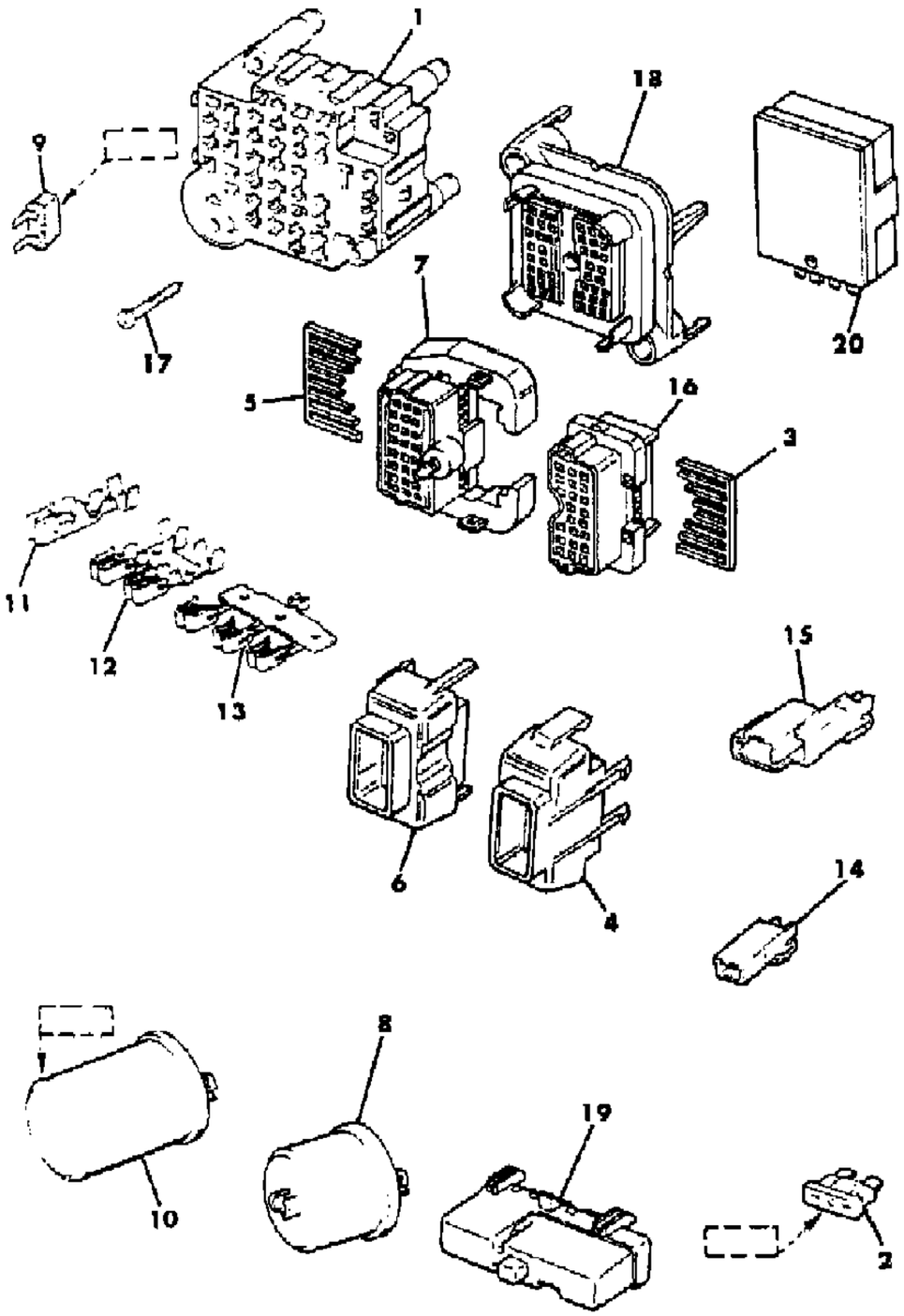

ITEM	PART NUMBER	QTY	BODY	MODEL	DESCRIPTION
1	J417 9458	1			PANEL, Fuse
2					FUSE
	J323 1213	AR			5 Amp.
	J323 1214	AR			7.5 Amp.
	J323 1215	AR			10 Amp.
	J323 1216	AR			15 Amp.
	J323 1217	AR			20 Amp.
	J323 1218	AR			25 Amp.
3	3417 5324	1			RETAINER
4	3417 5326	1			COVER
5	3417 5323	1			RETAINER
6	3417 5325	1			COVER
7					CONNECTOR, Bulkhead
	J417 9421	1			1984-85
	3417 8230	1			1986
8	J321 7282	1			FLASHER, Hazard
9					BREAKER, Circuit
	5600 1110	1			5.5 Amp.
	J323 4524	1			30 Amp.
10					FLASHER, T/Signal
	J321 2068	1			#224
	J321 2067	1			#232
	5600 0903	1			#550
	J545 2266	1			#552
11	J323 1223	5			TERMINAL
12	J323 1224	3			TERMINAL
13	J323 1225	1			TERMINAL
14					CONNECTOR
	J417 9537	AR			Red
	J417 9530	AR			Orange
	J417 9531	AR			Black
	J417 9532	AR			Green
	J417 9533	AR			Beige
	J417 9534	AR			Blue
	J417 9535	AR			Brown
15					CONNECTOR
	J417 9540	AR			Brown
	J417 9542	AR			Green
	J417 9630	AR			Black

MODEL CODES
16=Cherokee 2 Dr.(1981-83)
17=Cherokee 2 Dr.(1981-83)
73=Cherokee 2WD-2 Dr.(1984-86)
74=Cherokee 2WD-4 Dr.(1984-86)
18=Cherokee 4 Dr.(1981-83)
77=Cherokee 4WD-2 Dr.(1984-86)
78=Cherokee 4WD-4 Dr.(1984-86)
85=CJ-5 (1981-83)
86=CJ-6(1981)
87=CJ-7(1981-86)
88=CJ-8, Scrambler(1981-86)
64=Comanche 2WD-6 Ft. Box(1986)
66=Comanche 2WD-7 Ft. Box(1986)
63=Comanche 4WD-6 Ft. Box(1986)
65=Comanche 4WD-7 Ft. Box(1986)
15=Grand Wagoneer 4 Dr.(1984-86)
25=J-10 Truck 7 Ft. Box(1981-84)
26=J10 Truck 8 Ft. Box(1981-86)
27=J-20 Truck 8 Ft. Box(1981-86)
15=Wagoneer 4 Dr.(1981-83)
75=Wagoneer 4WD-4 Dr.(1984-86)

BODY
CJ=CJ-5, CJ-6, CJ-7, CJ-8, Scrambler(1981-86)
MJ=Comanche Pickup(1986)

STYLES
SJ=Wagoneer(1981-83), Grand Wagoneer(1984-86), Cherokee(1981-83), J-10, J-20(1981-86)
XJ=Wagoneer(1984-86), Cherokee(1984-86)

AR = Use as Required - = Non Illustrated Part P.A.R. = Paint as Required

« RETURN TO GROUP INDEX »

FUSE PANEL XJ CHEROKEE, XJ WAGONEER, COMANCHE
Figure 8A-2000

81J 082 2000

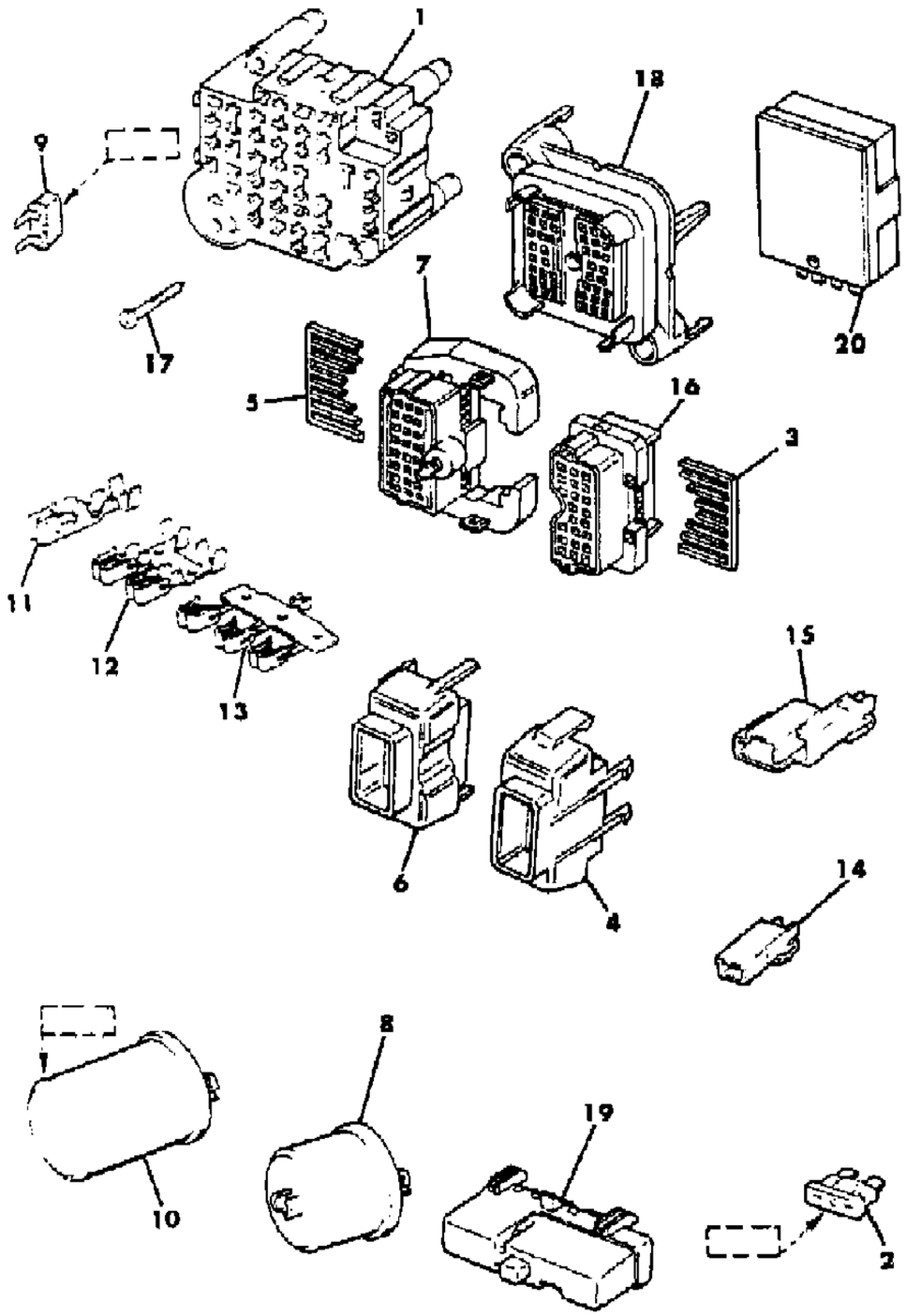

ITEM	PART NUMBER	QTY	BODY	MODEL	DESCRIPTION
16	J417 9420	1			CONNECTOR, Bulkhead
	J323 4524	1			BREAKER, Circuit
17					SCREW
	3420 1256	2			1984-85
	3420 1598	2			1986
18					CONNECTOR, Bulkhead
	J417 8280	1			1984-85
	3417 8240	1			1986
19					BUZZER
	J323 1209	1			Seat Belt
					Head Lamp
	5600 1076	1			Blue
	5600 1077	1			Black
20					CHIME, Warning ***
	3600 0562	1			1984-85
	5600 1347	1			1986

MODEL CODES

16=Cherokee 2 Dr.(1981-83)
17=Cherokee 2 Dr.(1981-83)
73=Cherokee 2WD-2 Dr.(1984-86)
74=Cherokee 2WD-4 Dr.(1984-86)
18=Cherokee 4 Dr.(1981-83)
77=Cherokee 4WD-2 Dr.(1984-86)
78=Cherokee 4WD-4 Dr.(1984-86)
85=CJ-5 (1981-83)
86=CJ-6(1981)
87=CJ-7(1981-86)
88=CJ-8, Scrambler(1981-86)
64=Comanche 2WD-6 Ft. Box(1986)
66=Comanche 2WD-7 Ft. Box(1986)
63=Comanche 4WD-6 Ft. Box(1986)
65=Comanche 4WD-7 Ft. Box(1986)
15=Grand Wagoneer 4 Dr.(1984-86)
25=J-10 Truck 7 Ft. Box(1981-84)
26=J10 Truck 8 Ft. Box(1981-86)
27=J-20 Truck 8 Ft. Box(1981-86)
15=Wagoneer 4 Dr.(1981-83)
75=Wagoneer 4WD-4 Dr.(1984-86)

BODY
CJ=CJ-5, CJ-6, CJ-7, CJ-8, Scrambler(1981-86)
MJ=Comanche Pickup(1986)

STYLES
SJ=Wagoneer(1981-83), Grand Wagoneer(1984-86), Cherokee(1981-83), J-10, J-20(1981-86)
XJ=Wagoneer(1984-86), Cherokee(1984-86)

AR = Use as Required - = Non Illustrated Part P.A.R. = Paint as Required

« RETURN TO GROUP INDEX

SPEAKERS AND RADIO KNOBS TWO SPEAKER SYSTEM XJ CHEROKEE, XJ WAGONEER, COMANCHE
Figure 8A-2100

81J 082 2100

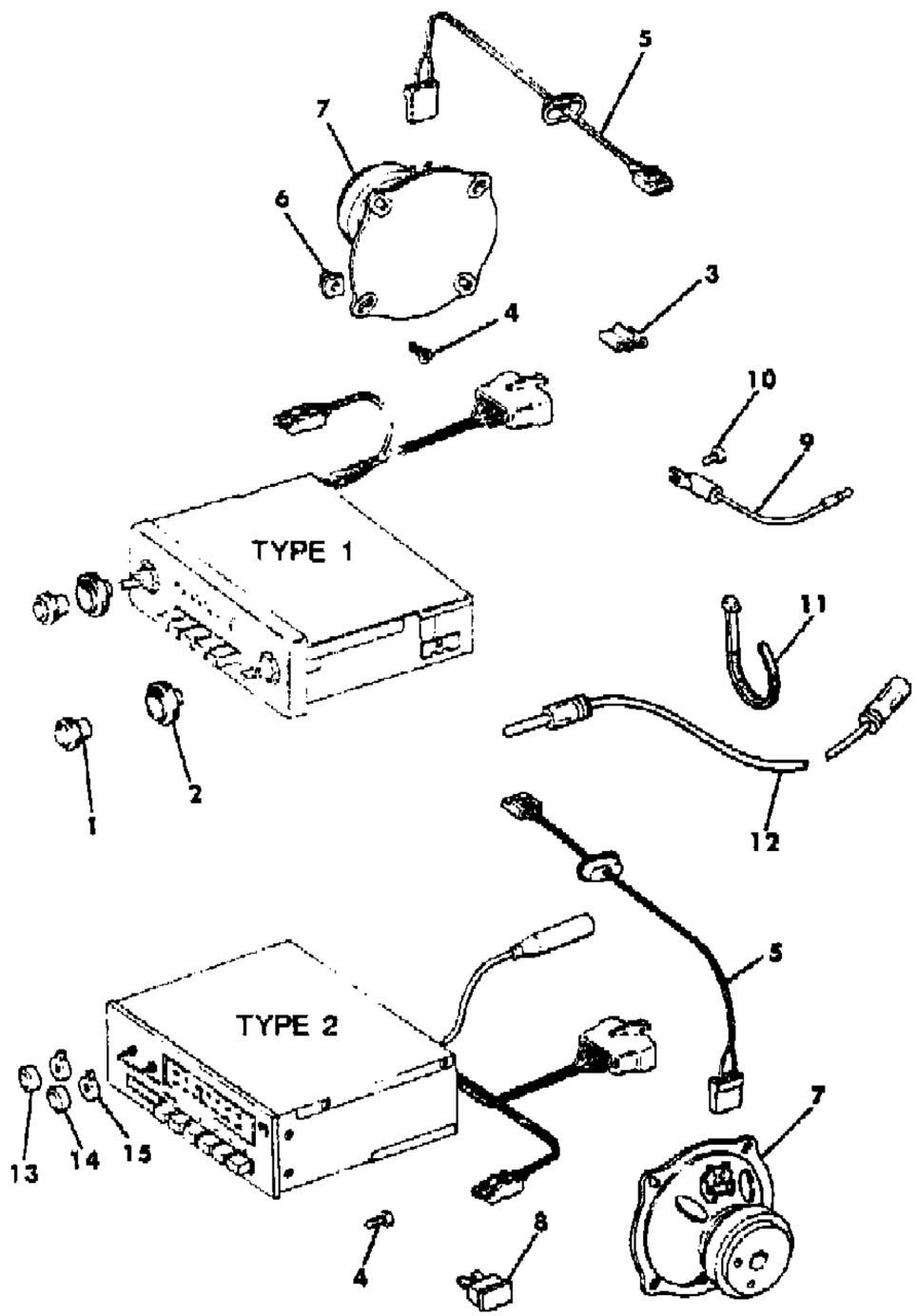

ITEM	PART NUMBER	QTY	BODY	MODEL	DESCRIPTION
1	5500 0670	2			KNOB, Primary
2	5500 0674	2			KNOB, Secondary
3	J400 5963	1			CLIP
4	1150 1011	AR			SCREW
5					HARNESS, Speaker
	5600 0444	2			1984-85
	5600 1850	2			1986
6	J400 5242	AR			NUT
7					SPEAKER, Door
	J323 8399	2			Type 1
					Type 2
	5600 1285	2			1985
	5600 1880	2			1986
8	J323 1213	1			FUSE
9	J322 9510	1			CAPACITOR, Ignition
10	1150 2453	1			SCREW
11	J322 3227	1			STRAP
12	5600 0527	1			CABLE, Antenna
13	8350 1413	1			KNOB, Volume
14	8350 1416	1			KNOB, Tuning
15	8350 1414	2			KNOB, Secondary

MODEL CODES

16=Cherokee 2 Dr.(1981-83)
17=Cherokee 2 Dr.(1981-83)
73=Cherokee 2WD-2 Dr.(1984-86)
74=Cherokee 2WD-4 Dr.(1984-86)
18=Cherokee 4 Dr.(1981-83)
77=Cherokee 4WD-2 Dr.(1984-86)
78=Cherokee 4WD-4 Dr.(1984-86)
85=CJ-5 (1981-83)
86=CJ-6(1981)
87=CJ-7(1981-86)
88=CJ-8, Scrambler(1981-86)
64=Comanche 2WD-6 Ft. Box(1986)
66=Comanche 2WD-7 Ft. Box(1986)
63=Comanche 4WD-6 Ft. Box(1986)
65=Comanche 4WD-7 Ft. Box(1986)
15=Grand Wagoneer 4 Dr.(1984-86)
25=J-10 Truck 7 Ft. Box(1981-84)
26=J10 Truck 8 Ft. Box(1981-86)
27=J-20 Truck 8 Ft. Box(1981-86)
15=Wagoneer 4 Dr.(1981-83)
75=Wagoneer 4WD-4 Dr.(1984-86)

BODY
CJ=CJ-5, CJ-6, CJ-7, CJ-8, Scrambler(1981-86)
MJ=Comanche Pickup(1986)

STYLES
SJ=Wagoneer(1981-83), Grand Wagoneer(1984-86), Cherokee(1981-83), J-10, J-20(1981-86)
XJ=Wagoneer(1984-86), Cherokee(1984-86)

AR = Use as Required - = Non Illustrated Part P.A.R. = Paint as Required

« RETURN TO GROUP INDEX

SPEAKERS AND RADIO KNOBS FOUR OR SIX SPEAKER SYSTEMS XJ CHEROKEE, XJ WAGONEER, COMANCHE
Figure 8A-2200

81J 082 2200

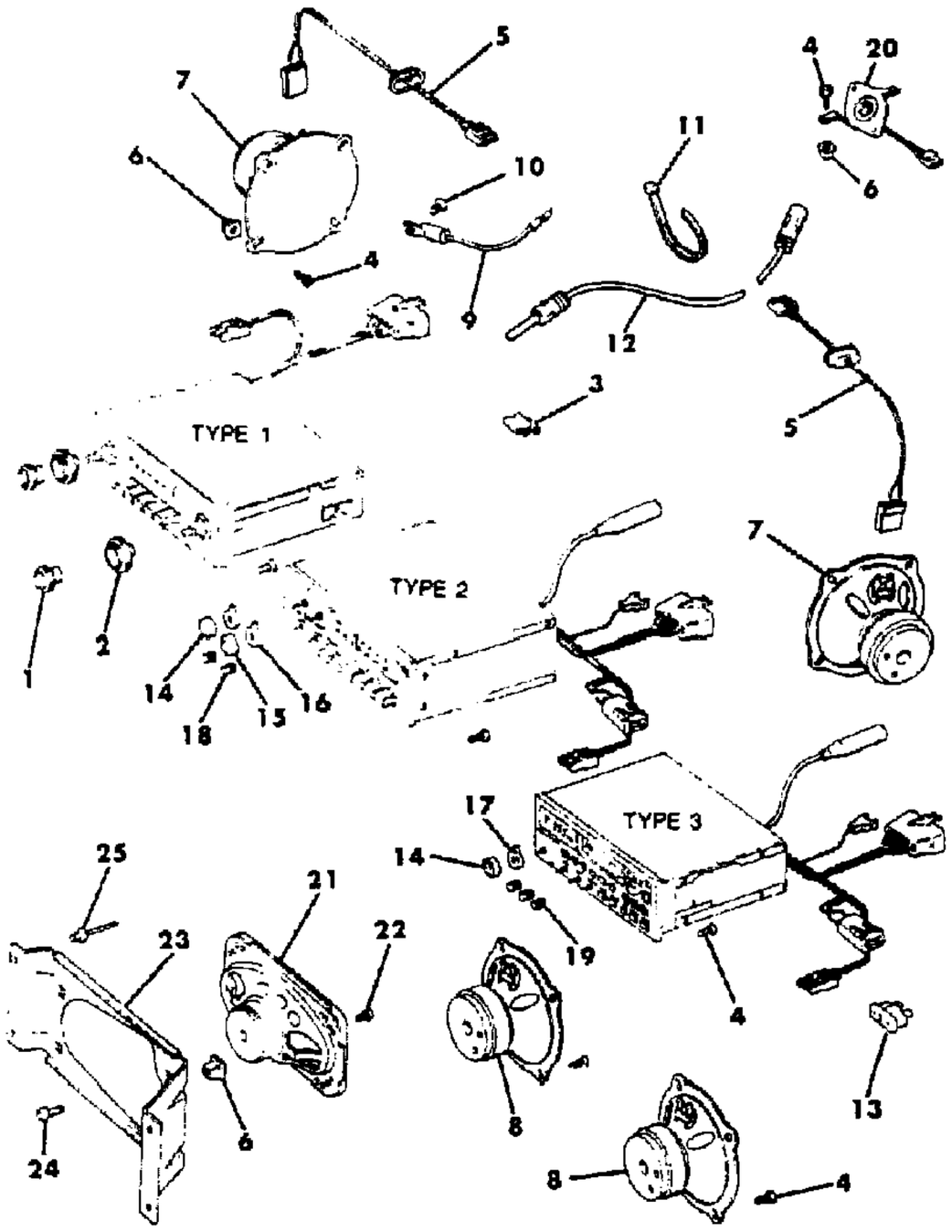

ITEM	PART NUMBER	QTY	BODY	MODEL	DESCRIPTION
1	5500 0670	2			KNOB, Primary
2	5500 0674	2			KNOB, Secondary
3	J400 5963	1			CLIP
4	1150 1011	AR			SCREW
5					HARNESS, Speaker
	5600 0444	2			1984-85
	5600 1850	2			1986
6	J400 5242	AR			NUT
7					SPEAKER, Door
	J323 6137	2			Type 1 1984-85
	5600 1285	2			Type 2 1984-85 ‘
	5600 1880	2			Type 2 1986
	J323 6137	2			Type 3 1984-85
	3600 1124	2			Type 3 1986
8					SPEAKER, Rear
	J323 6137	2			Type 1 1984-85
	5600 1285	2			Type 2 1984-85
	5600 1880	2			Type 2 1986
	J323 6137	1			Type 3 1984-85
	3600 1125	2			Type 3 1986
9	J322 9510	1			CAPACITOR, Ignition
10	1150 2453	1			SCREW
11	J322 3227	1			STRAP
12	5600 0527	1			CABLE, Antenna
13					FUSE
	J323 1211	1			3 Amp.
	J323 1213	1			5 Amp.
14					KNOB, Volume
	8350 1171	1			1984
	8350 1413	1			1985-86
15	8350 1416	1			KNOB, Tuning
16	8350 1414	2			KNOB, Secondary
17					KNOB, Secondary
	8350 1172	1			1984
	8350 1414	1			1985-86
18	8350 1415	2			KNOB, Balance
19	8350 1173	3			KNOB, Balance, 1984
20					SPEAKER, Instrument panel
	3600 1123	1			Right

MODEL CODES

16=Cherokee 2 Dr.(1981-83)
17=Cherokee 2 Dr.(1981-83)
73=Cherokee 2WD-2 Dr.(1984-86)
74=Cherokee 2WD-4 Dr.(1984-86)
18=Cherokee 4 Dr.(1981-83)
77=Cherokee 4WD-2 Dr.(1984-86)
78=Cherokee 4WD-4 Dr.(1984-86)
85=CJ-5 (1981-83)
86=CJ-6(1981)
87=CJ-7(1981-86)
88=CJ-8, Scrambler(1981-86)
64=Comanche 2WD-6 Ft. Box(1986)
66=Comanche 2WD-7 Ft. Box(1986)
63=Comanche 4WD-6 Ft. Box(1986)
65=Comanche 4WD-7 Ft. Box(1986)
15=Grand Wagoneer 4 Dr.(1984-86)
25=J-10 Truck 7 Ft. Box(1981-84)
26=J10 Truck 8 Ft. Box(1981-86)
27=J-20 Truck 8 Ft. Box(1981-86)
15=Wagoneer 4 Dr.(1981-83)
75=Wagoneer 4WD-4 Dr.(1984-86)

BODY
CJ=CJ-5, CJ-6, CJ-7, CJ-8, Scrambler(1981-86)
MJ=Comanche Pickup(1986)

STYLES
SJ=Wagoneer(1981-83), Grand Wagoneer(1984-86), Cherokee(1981-83), J-10, J-20(1981-86)
XJ=Wagoneer(1984-86), Cherokee(1984-86)

AR = Use as Required - = Non Illustrated Part P.A.R. = Paint as Required

« RETURN TO GROUP INDEX »

81J 082 2200

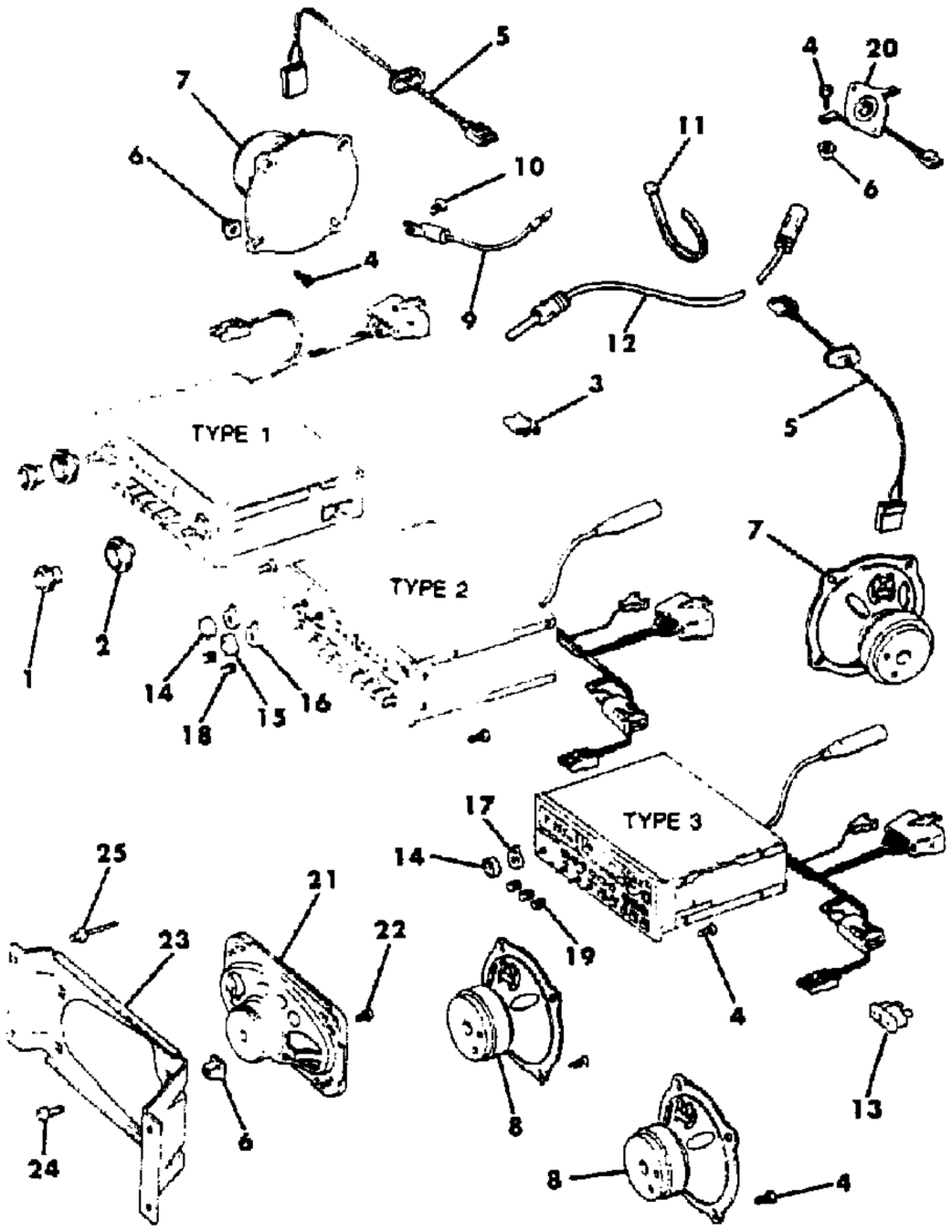

ITEM	PART NUMBER	QTY	BODY	MODEL	DESCRIPTION
	5600 2013	1			Left
21	5600 1878	2			SPEAKER, Rear
22	3420 1264	AR			SCREW
23	5500 6736	2			BRACKET, Speaker
24	1150 1012	AR			SCREW
25	3420 1792	AR			RIVET

MODEL CODES
16=Cherokee 2 Dr.(1981-83)
17=Cherokee 2 Dr.(1981-83)
73=Cherokee 2WD-2 Dr.(1984-86)
74=Cherokee 2WD-4 Dr.(1984-86)
18=Cherokee 4 Dr.(1981-83)
77=Cherokee 4WD-2 Dr.(1984-86)
78=Cherokee 4WD-4 Dr.(1984-86)
85=CJ-5 (1981-83)
86=CJ-6(1981)
87=CJ-7(1981-86)
88=CJ-8, Scrambler(1981-86)
64=Comanche 2WD-6 Ft. Box(1986)
66=Comanche 2WD-7 Ft. Box(1986)
63=Comanche 4WD-6 Ft. Box(1986)
65=Comanche 4WD-7 Ft. Box(1986)
15=Grand Wagoneer 4 Dr.(1984-86)
25=J-10 Truck 7 Ft. Box(1981-84)
26=J10 Truck 8 Ft. Box(1981-86)
27=J-20 Truck 8 Ft. Box(1981-86)
15=Wagoneer 4 Dr.(1981-83)
75=Wagoneer 4WD-4 Dr.(1984-86)

BODY
CJ=CJ-5, CJ-6, CJ-7, CJ-8, Scrambler(1981-86)
MJ=Comanche Pickup(1986)

STYLES
SJ=Wagoneer(1981-83), Grand Wagoneer(1984-86), Cherokee(1981-83), J-10, J-20(1981-86)
XJ=Wagoneer(1984-86), Cherokee(1984-86)

AR = Use as Required - = Non Illustrated Part P.A.R. = Paint as Required

ANTENNA XJ CHEROKEE, XJ WAGONEER, COMANCHE
Figure 8A-2300

81J 082 2300

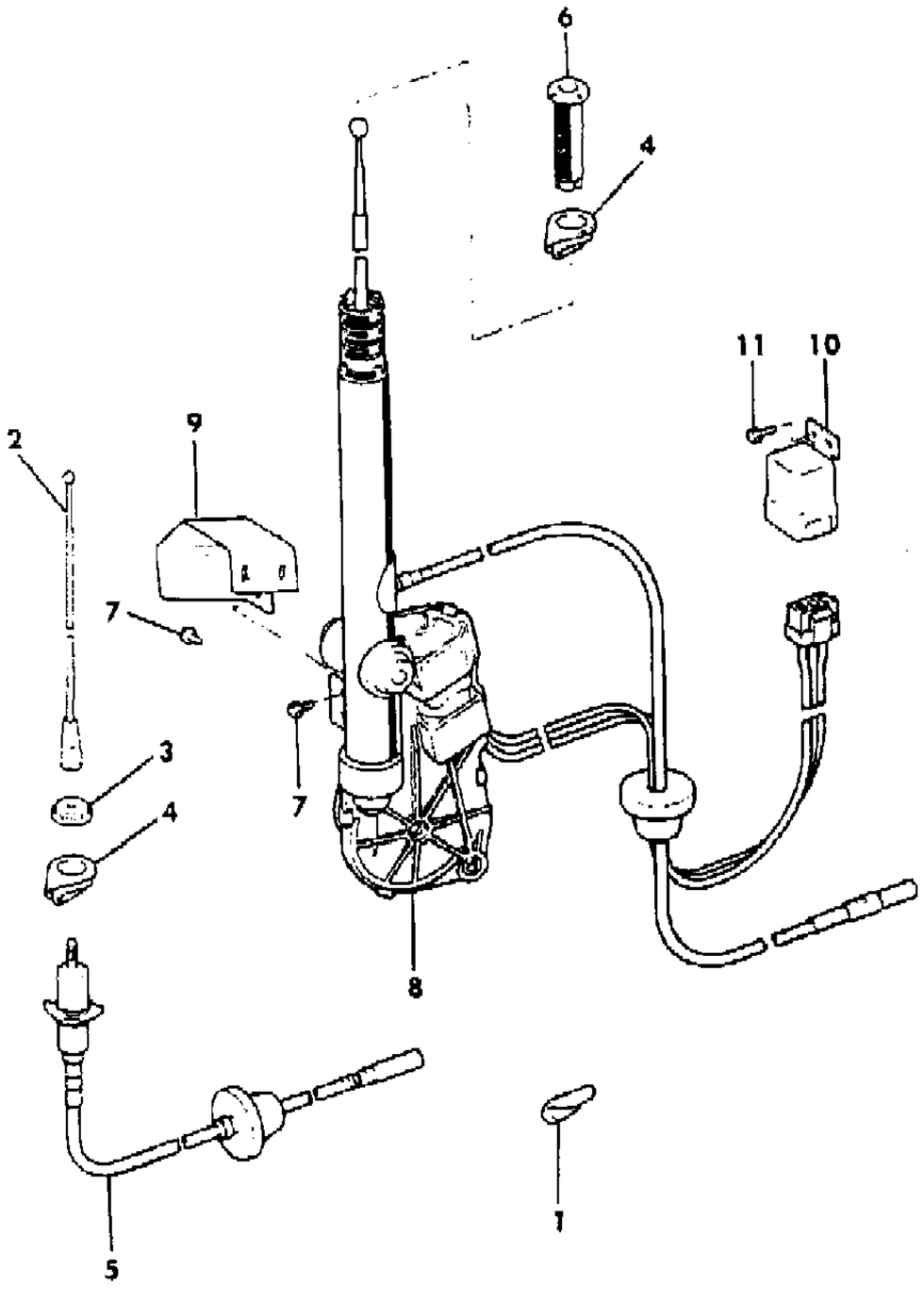

ITEM	PART NUMBER	QTY	BODY	MODEL	DESCRIPTION
1	5600 1184	1			COVER, Hole
2	5600 0508	1			ANTENNA
3	5600 0506	1			NUT
4	5600 1183	1			PAD, Antenna
5	5600 0282	1			BASE, With Cable
6	5600 0552	1			ESCUTCHEON
7	3420 1522	4			SCREW
8	5600 0551	1			ANTENNA, Power
9	5600 0553	1			BRACKET
10	5600 0836	1			RELAY, Power Antenna
11	3420 1418	2			SCREW

MODEL CODES

16=Cherokee 2 Dr.(1981-83)
17=Cherokee 2 Dr.(1981-83)
73=Cherokee 2WD-2 Dr.(1984-86)
74=Cherokee 2WD-4 Dr.(1984-86)
18=Cherokee 4 Dr.(1981-83)
77=Cherokee 4WD-2 Dr.(1984-86)
78=Cherokee 4WD-4 Dr.(1984-86)
85=CJ-5 (1981-83)
86=CJ-6(1981)
87=CJ-7(1981-86)
88=CJ-8, Scrambler(1981-86)
64=Comanche 2WD-6 Ft. Box(1986)
66=Comanche 2WD-7 Ft. Box(1986)
63=Comanche 4WD-6 Ft. Box(1986)
65=Comanche 4WD-7 Ft. Box(1986)
15=Grand Wagoneer 4 Dr.(1984-86)
25=J-10 Truck 7 Ft. Box(1981-84)
26=J10 Truck 8 Ft. Box(1981-86)
27=J-20 Truck 8 Ft. Box(1981-86)
15=Wagoneer 4 Dr.(1981-83)
75=Wagoneer 4WD-4 Dr.(1984-86)

BODY
CJ=CJ-5, CJ-6, CJ-7, CJ-8, Scrambler(1981-86)
MJ=Comanche Pickup(1986)

STYLES
SJ=Wagoneer(1981-83), Grand Wagoneer(1984-86), Cherokee(1981-83), J-10, J-20(1981-86)
XJ=Wagoneer(1984-86), Cherokee(1984-86)

AR = Use as Required - = Non Illustrated Part P.A.R. = Paint as Required

« RETURN TO GROUP INDEX

SHIFT BEZELS XJ CHEROKEE, XJ WAGONEER, COMANCHE
Figure 8A-2400

81J 082 2400

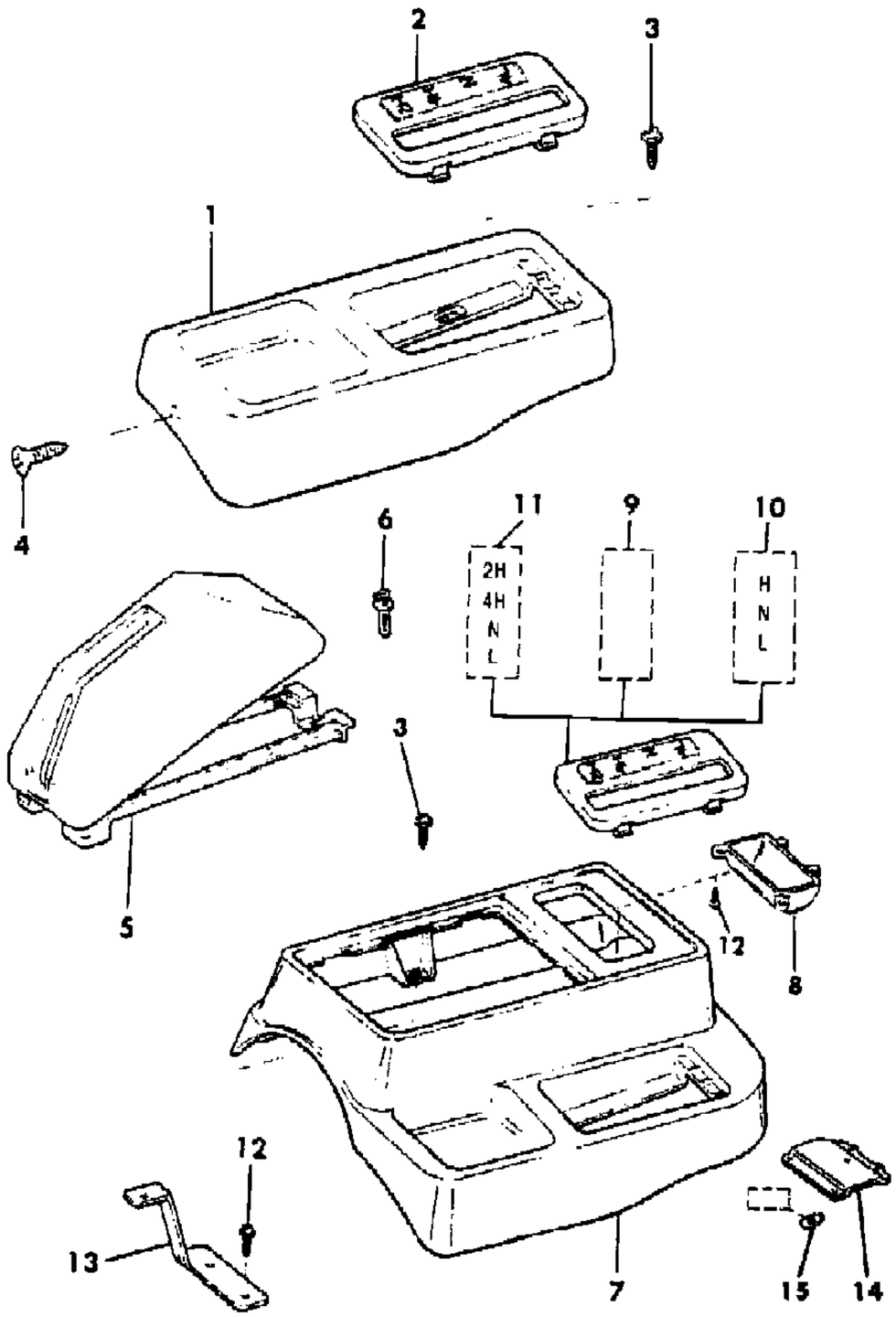

ITEM	PART NUMBER	QTY	BODY	MODEL	DESCRIPTION
1	5500 8549	1			BEZEL, Shift
2	5500 5175	1			BEZEL, Transfer Case
3	3420 1314	AR			SCREW
4	3420 1719	1			SCREW
5	5500 3264	1			COVER, Parking Brake
6	3420 1353	3			RIVET, 1984-85
	J400 7056	3			SCREW, 1986
7	5500 2392	1			BEZEL, Shift
8	5500 3281	1			CUP, Coin Retainer ***
9	5500 8061	1			COVER, 2 WD
10					BEZEL, Transfer Case, 4WD Selec-Trac
	5500 5176	1			1984-85
	5500 7395	1			1986
11	5500 5175	1			BEZEL, Transfer Case, 4WD Command-Trac
12	1150 2843	AR			SCREW
13	5300 0812	1			BRACKET
14	5300 0643	1			BEZEL, 4WD Selec-Trac
15	S943 7448	1			BULB #658 ***

MODEL CODES

16=Cherokee 2 Dr.(1981-83)
17=Cherokee 2 Dr.(1981-83)
73=Cherokee 2WD-2 Dr.(1984-86)
74=Cherokee 2WD-4 Dr.(1984-86)
18=Cherokee 4 Dr.(1981-83)
77=Cherokee 4WD-2 Dr.(1984-86)
78=Cherokee 4WD-4 Dr.(1984-86)
85=CJ-5 (1981-83)
86=CJ-6(1981)
87=CJ-7(1981-86)
88=CJ-8, Scrambler(1981-86)
64=Comanche 2WD-6 Ft. Box(1986)
66=Comanche 2WD-7 Ft. Box(1986)
63=Comanche 4WD-6 Ft. Box(1986)
65=Comanche 4WD-7 Ft. Box(1986)
15=Grand Wagoneer 4 Dr.(1984-86)
25=J-10 Truck 7 Ft. Box(1981-84)
26=J10 Truck 8 Ft. Box(1981-86)
27=J-20 Truck 8 Ft. Box(1981-86)
15=Wagoneer 4 Dr.(1981-83)
75=Wagoneer 4WD-4 Dr.(1984-86)

BODY

CJ=CJ-5, CJ-6, CJ-7, CJ-8, Scrambler(1981-86)
MJ=Comanche Pickup(1986)

STYLES

SJ=Wagoneer(1981-83), Grand Wagoneer(1984-86), Cherokee(1981-83), J-10, J-20(1981-86)
XJ=Wagoneer(1984-86), Cherokee(1984-86)

AR = Use as Required - = Non Illustrated Part P.A.R. = Paint as Required

« RETURN TO GROUP INDEX

CONSOLE XJ CHEROKEE, XJ WAGONEER, COMANCHE
Figure 8A-2500

81J 082 2500

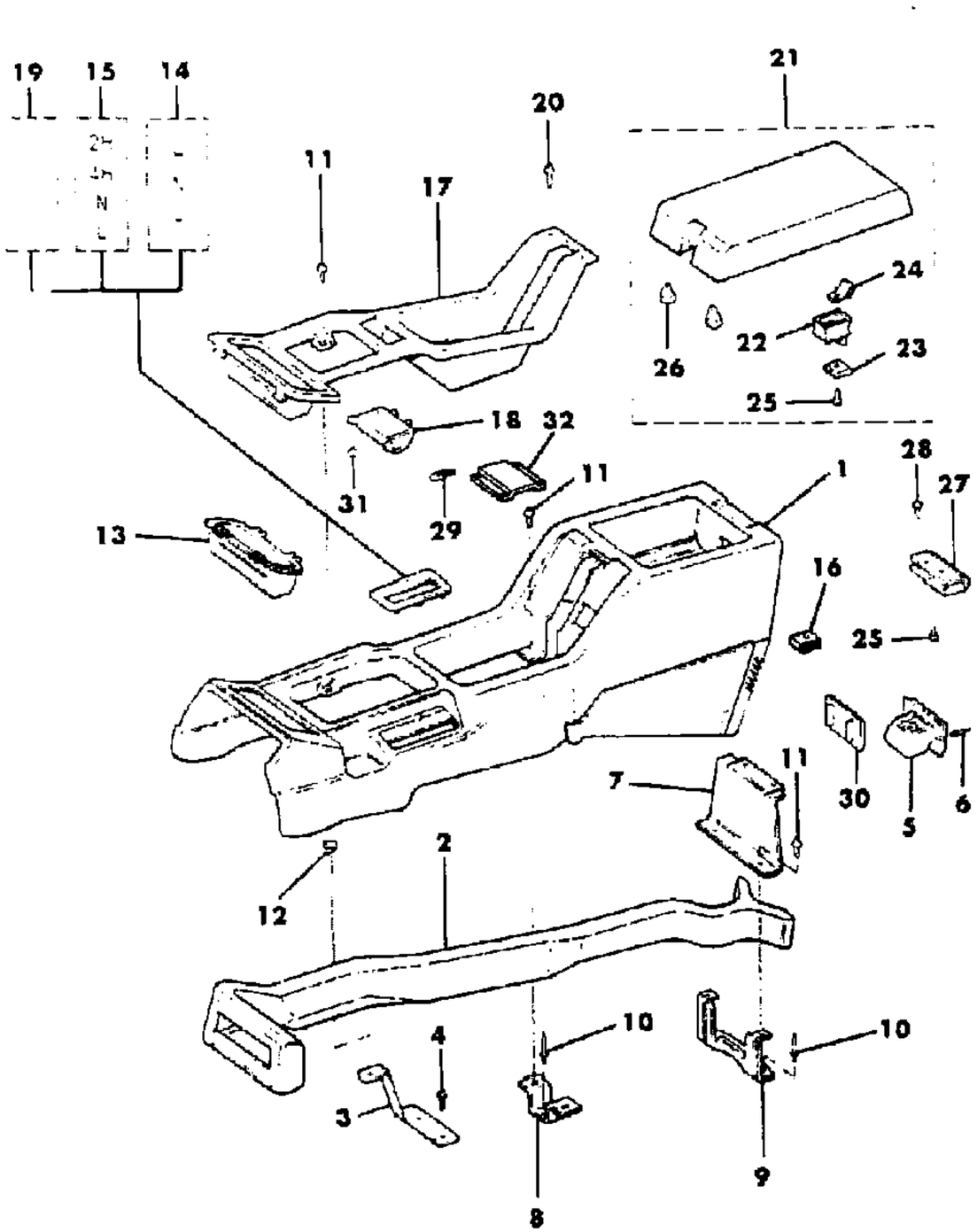

ITEM	PART NUMBER	QTY	BODY	MODEL	DESCRIPTION
1					BASE, Console
	8350 1153	1	XJ		
	8350 2357	1	MJ		
2	5500 1303	1			DUCT, Heater
3	5300 0812	1			BRACKET
4	1150 2843	2			SCREW
5	5500 2759	1			RECEIVER, Ash
6	3420 1197	2			RIVET
7	5500 1294	1			REINFORCEMENT
8	5500 1307	1			BRACKET
9	5500 1308	1			BRACKET
10	J400 4707	4			RIVET
11					SCREW
	3420 1440	AR	XJ		
	J400 3663	AR	MJ		
12	3420 1509	2			CLIP
13	5500 1391	1			BOX, Storage
14					BEZEL, Transfer Case, 4WD Selec-Trac
	5500 5176	1			1984-85
	5500 7395	1			1986
15	5500 5175	1			BEZEL, Transfer Case, 4WD Command-Trac
16	J400 0383	1			NUT
17					COVER, Shift
	5500 1319	1	XJ		
	5500 8218	1	MJ		
18	5500 3281	1			CUP, Coin Retainer ***
19	5500 8061	1			COVER, 2WD
20	3420 1286	2			SCREW
21					COVER, Storage
	5500 1362	1	XJ		
	5500 8162	1	MJ		
22	5500 1299	1			LATCH, Storage Compartment
23	5500 1300	1			RETAINER, Latch
24	5500 1301	1			SPRING, Latch
25	3420 1510	AR			SCREW
26	3420 1902	2			BUMPER, Cover
27	5500 1302	1			HINGE, Cover
28	1150 1011	3			SCREW
29	S943 7448	3			BULB #658 ***

MODEL CODES
16=Cherokee 2 Dr.(1981-83)
17=Cherokee 2 Dr.(1981-83)
73=Cherokee 2WD-2 Dr.(1984-86)
74=Cherokee 2WD-4 Dr.(1984-86)
18=Cherokee 4 Dr.(1981-83)
77=Cherokee 4WD-2 Dr.(1984-86)
78=Cherokee 4WD-4 Dr.(1984-86)
85=CJ-5 (1981-83)
86=CJ-6(1981)
87=CJ-7(1981-86)
88=CJ-8, Scrambler(1981-86)
64=Comanche 2WD-6 Ft. Box(1986)
66=Comanche 2WD-7 Ft. Box(1986)
63=Comanche 4WD-6 Ft. Box(1986)
65=Comanche 4WD-7 Ft. Box(1986)
15=Grand Wagoneer 4 Dr.(1984-86)
25=J-10 Truck 7 Ft. Box(1981-84)
26=J10 Truck 8 Ft. Box(1981-86)
27=J-20 Truck 8 Ft. Box(1981-86)
15=Wagoneer 4 Dr.(1981-83)
75=Wagoneer 4WD-4 Dr.(1984-86)

BODY
CJ=CJ-5, CJ-6, CJ-7, CJ-8, Scrambler(1981-86)
MJ=Comanche Pickup(1986)

STYLES
SJ=Wagoneer(1981-83), Grand Wagoneer(1984-86), Cherokee(1981-83), J-10, J-20(1981-86)
XJ=Wagoneer(1984-86), Cherokee(1984-86)

AR = Use as Required - = Non Illustrated Part P.A.R. = Paint as Required

« RETURN TO GROUP INDEX »

CONSOLE XJ CHEROKEE, XJ WAGONEER, COMANCHE
Figure 8A-2500

81J 082 2500

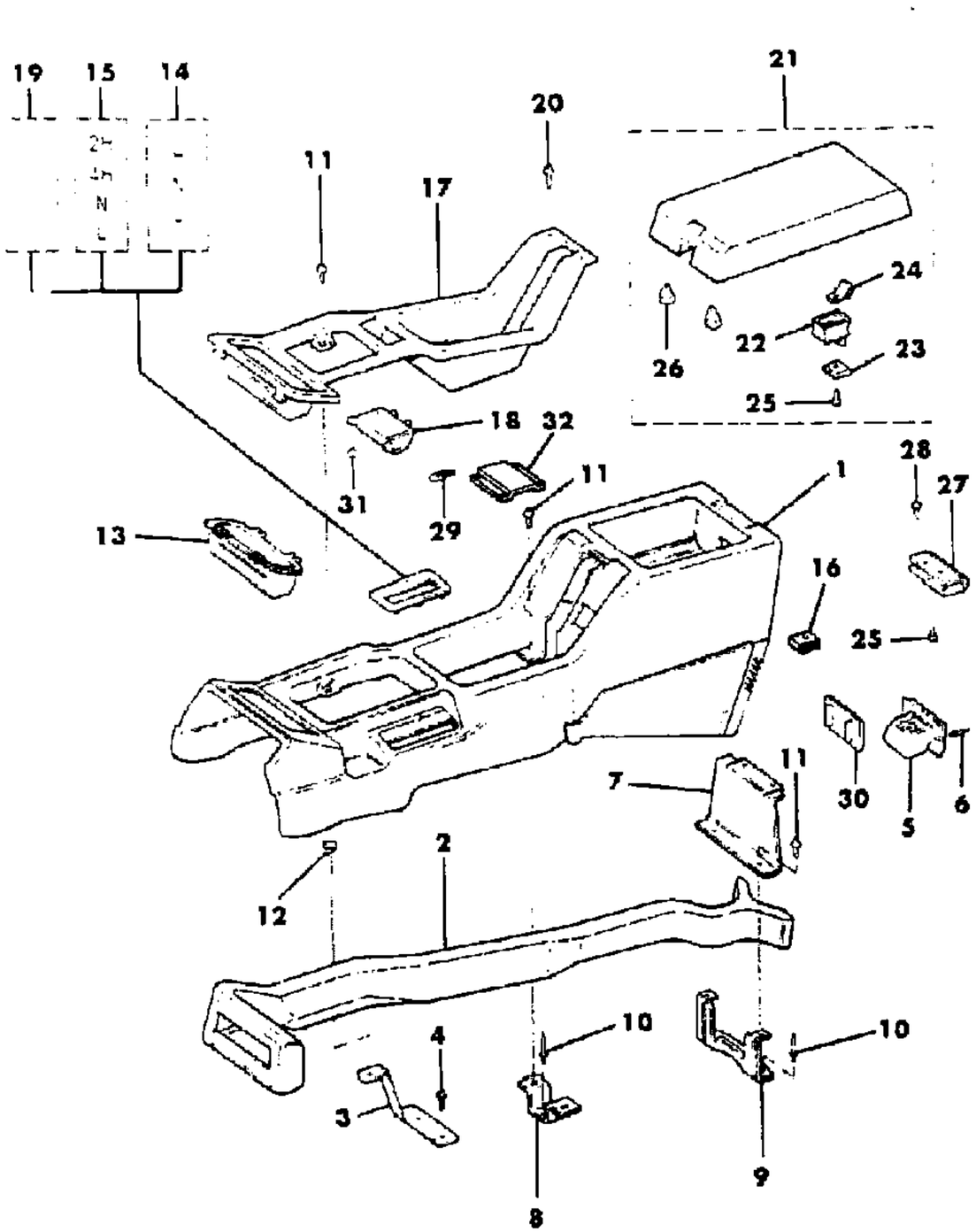

ITEM	PART NUMBER	QTY	BODY	MODEL	DESCRIPTION
30	5500 8219	1			COVER
31					SCREW
	3420 1298	4			1984-85
	1150 2843	4	XJ		1986
	3420 1298	4	MJ		1986
32					BEZEL, 4WD Selec-Trac
	5300 1616	1			1984
	5300 1995	1			1985-86

MODEL CODES

16=Cherokee 2 Dr.(1981-83)
17=Cherokee 2 Dr.(1981-83)
73=Cherokee 2WD-2 Dr.(1984-86)
74=Cherokee 2WD-4 Dr.(1984-86)
18=Cherokee 4 Dr.(1981-83)
77=Cherokee 4WD-2 Dr.(1984-86)
78=Cherokee 4WD-4 Dr.(1984-86)
85=CJ-5 (1981-83)
86=CJ-6(1981)
87=CJ-7(1981-86)
88=CJ-8, Scrambler(1981-86)
64=Comanche 2WD-6 Ft. Box(1986)
66=Comanche 2WD-7 Ft. Box(1986)
63=Comanche 4WD-6 Ft. Box(1986)
65=Comanche 4WD-7 Ft. Box(1986)
15=Grand Wagoneer 4 Dr.(1984-86)
25=J-10 Truck 7 Ft. Box(1981-84)
26=J10 Truck 8 Ft. Box(1981-86)
27=J-20 Truck 8 Ft. Box(1981-86)
15=Wagoneer 4 Dr.(1981-83)
75=Wagoneer 4WD-4 Dr.(1984-86)

BODY
CJ=CJ-5, CJ-6, CJ-7, CJ-8, Scrambler(1981-86)
MJ=Comanche Pickup(1986)

STYLES
SJ=Wagoneer(1981-83), Grand Wagoneer(1984-86), Cherokee(1981-83), J-10, J-20(1981-86)
XJ=Wagoneer(1984-86), Cherokee(1984-86)

AR = Use as Required - = Non Illustrated Part P.A.R. = Paint as Required

« RETURN TO GROUP INDEX

INSTRUMENT PANEL, 1981-85 PAD AND BEZELS SJ CHEROKEE, SJ WAGONEER, J10, J20
Figure 8A-2600

81J 082 2600

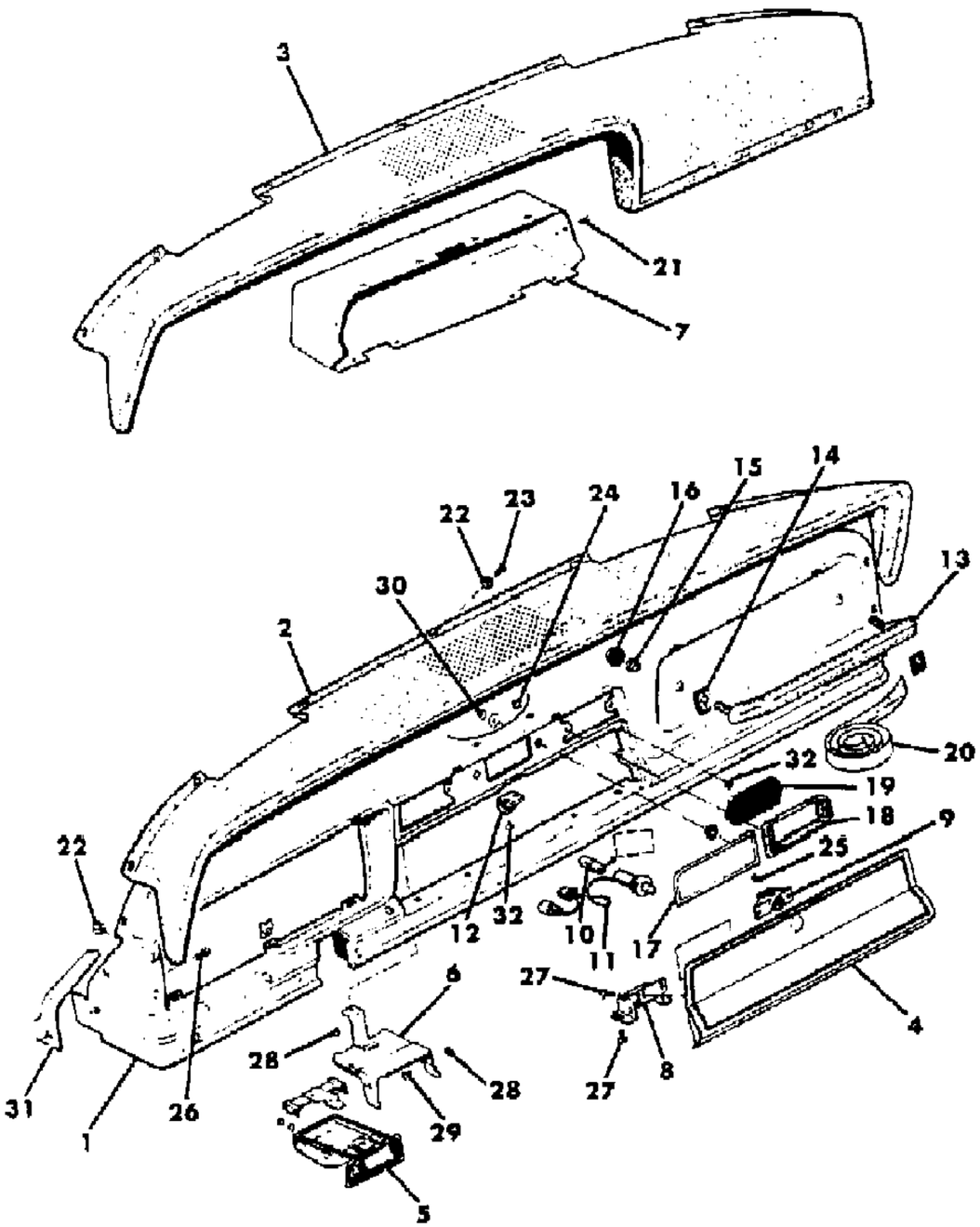

ITEM	PART NUMBER	QTY	BODY	MODEL	DESCRIPTION
1	J576 1104	1			PANEL, Instrument
2	J545 6450	1			PAD, 1981-83
3	J575 5950	1			PAD, 1984-85
4					DOOR, Glovebox
	J095 8628	1			1981
	J576 1528	1			1982-85
5	J098 7855	1			RECEIVER, Ash
6	J098 9425	1			RETAINER
7	J545 9886	1			HOUSING, Glovebox
8	J095 9599	2			HINGE, Glovebox
9	J363 2495	1			HOUSING, Glovebox Lock
10	J345 1933	1			BULB #1893 ***
11	J576 3518	1			SWITCH, Glovebox Lamp
12					STRIKER, Glovebox Lock
	J546 9465	1			1981
	J576 1531	1			1982-85
13					HANDLE, Assist
	J546 8609	1			Black
	J546 8610	1			Blue
	J575 8914	1			Slate Blue
	J575 5300	1			Brown
	J575 5301	1			Nutmeg
14	J546 9110	2			ESCUTCHEON
15	J546 5767	2			SPACER
16	J400 4587	2			NUT
17	J546 4250	1			COVER, Radio
18	J098 9277	1			BEZEL
19	J098 7852	1			COVER, Clock
20	J575 6560-1	1			OVERLAY, Woodgrain ***
21	S016 3210	AR			SCREW
22	J027 1163	AR			NUT
23	J096 0601	AR			RETAINER
24	J942 0287	2			NUT
25	J448 9486	2			SCREW
26	J812 3059	AR			SCREW
27	J015 9920	4			SCREW
28	J027 1166	2			NUT
29	S016 3098	2			SCREW
30	J320 9575	2			NUT

MODEL CODES
16=Cherokee 2 Dr.(1981-83)
17=Cherokee 2 Dr.(1981-83)
73=Cherokee 2WD-2 Dr.(1984-86)
74=Cherokee 2WD-4 Dr.(1984-86)
18=Cherokee 4 Dr.(1981-83)
77=Cherokee 4WD-2 Dr.(1984-86)
78=Cherokee 4WD-4 Dr.(1984-86)
85=CJ-5 (1981-83)
86=CJ-6(1981)
87=CJ-7(1981-86)
88=CJ-8, Scrambler(1981-86)
64=Comanche 2WD-6 Ft. Box(1986)
66=Comanche 2WD-7 Ft. Box(1986)
63=Comanche 4WD-6 Ft. Box(1986)
65=Comanche 4WD-7 Ft. Box(1986)
15=Grand Wagoneer 4 Dr.(1984-86)
25=J-10 Truck 7 Ft. Box(1981-84)
26=J10 Truck 8 Ft. Box(1981-86)
27=J-20 Truck 8 Ft. Box(1981-86)
15=Wagoneer 4 Dr.(1981-83)
75=Wagoneer 4WD-4 Dr.(1984-86)

BODY
CJ=CJ-5, CJ-6, CJ-7, CJ-8, Scrambler(1981-86)
MJ=Comanche Pickup(1986)

STYLES
SJ=Wagoneer(1981-83), Grand Wagoneer(1984-86), Cherokee(1981-83), J-10, J-20(1981-86)
XJ=Wagoneer(1984-86), Cherokee(1984-86)

AR = Use as Required - = Non Illustrated Part P.A.R. = Paint as Required

« RETURN TO GROUP INDEX »

INSTRUMENT PANEL, 1981-85 PAD AND BEZELS SJ CHEROKEE, SJ WAGONEER, J10, J20
Figure 8A-2600

81J 082 2600

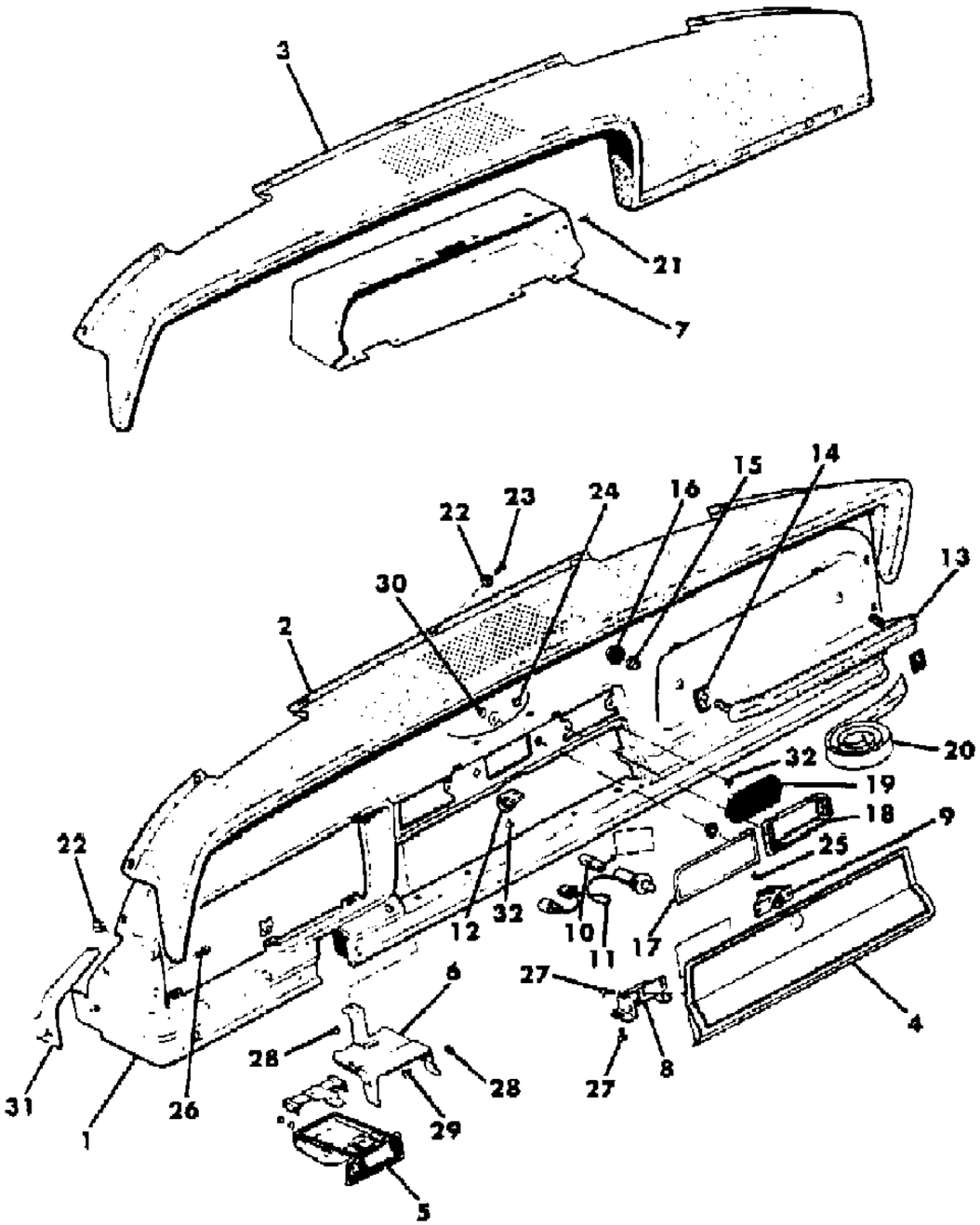

ITEM	PART NUMBER	QTY	BODY	MODEL	DESCRIPTION
31	J545 7194	2			INSERT
32	J095 7274	2			BUMPER

MODEL CODES

16=Cherokee 2 Dr.(1981-83)	78=Cherokee 4WD-4 Dr.(1984-86)	64=Comanche 2WD-6 Ft. Box(1986)	25=J-10 Truck 7 Ft. Box(1981-84)
17=Cherokee 2 Dr.(1981-83)	85=CJ-5 (1981-83)	66=Comanche 2WD-7 Ft. Box(1986)	26=J10 Truck 8 Ft. Box(1981-86)
73=Cherokee 2WD-2 Dr.(1984-86)	86=CJ-6(1981)	63=Comanche 4WD-6 Ft. Box(1986)	27=J-20 Truck 8 Ft. Box(1981-86)
74=Cherokee 2WD-4 Dr.(1984-86)	87=CJ-7(1981-86)	65=Comanche 4WD-7 Ft. Box(1986)	15=Wagoneer 4 Dr.(1981-83)
18=Cherokee 4 Dr.(1981-83)	88=CJ-8, Scrambler(1981-86)	15=Grand Wagoneer 4 Dr.(1984-86)	75=Wagoneer 4WD-4 Dr.(1984-86)
77=Cherokee 4WD-2 Dr.(1984-86)			

BODY
CJ=CJ-5, CJ-6, CJ-7, CJ-8, Scrambler(1981-86)
MJ=Comanche Pickup(1986)

STYLES
SJ=Wagoneer(1981-83), Grand Wagoneer(1984-86), Cherokee(1981-83), J-10, J-20(1981-86)
XJ=Wagoneer(1984-86), Cherokee(1984-86)

AR = Use as Required - = Non Illustrated Part P.A.R. = Paint as Required

« RETURN TO GROUP INDEX

INSTRUMENT PANEL, 1986 PAD AND BEZELS SJ WAGONEER, J10, J20
Figure 8A-2700

81J 082 2700

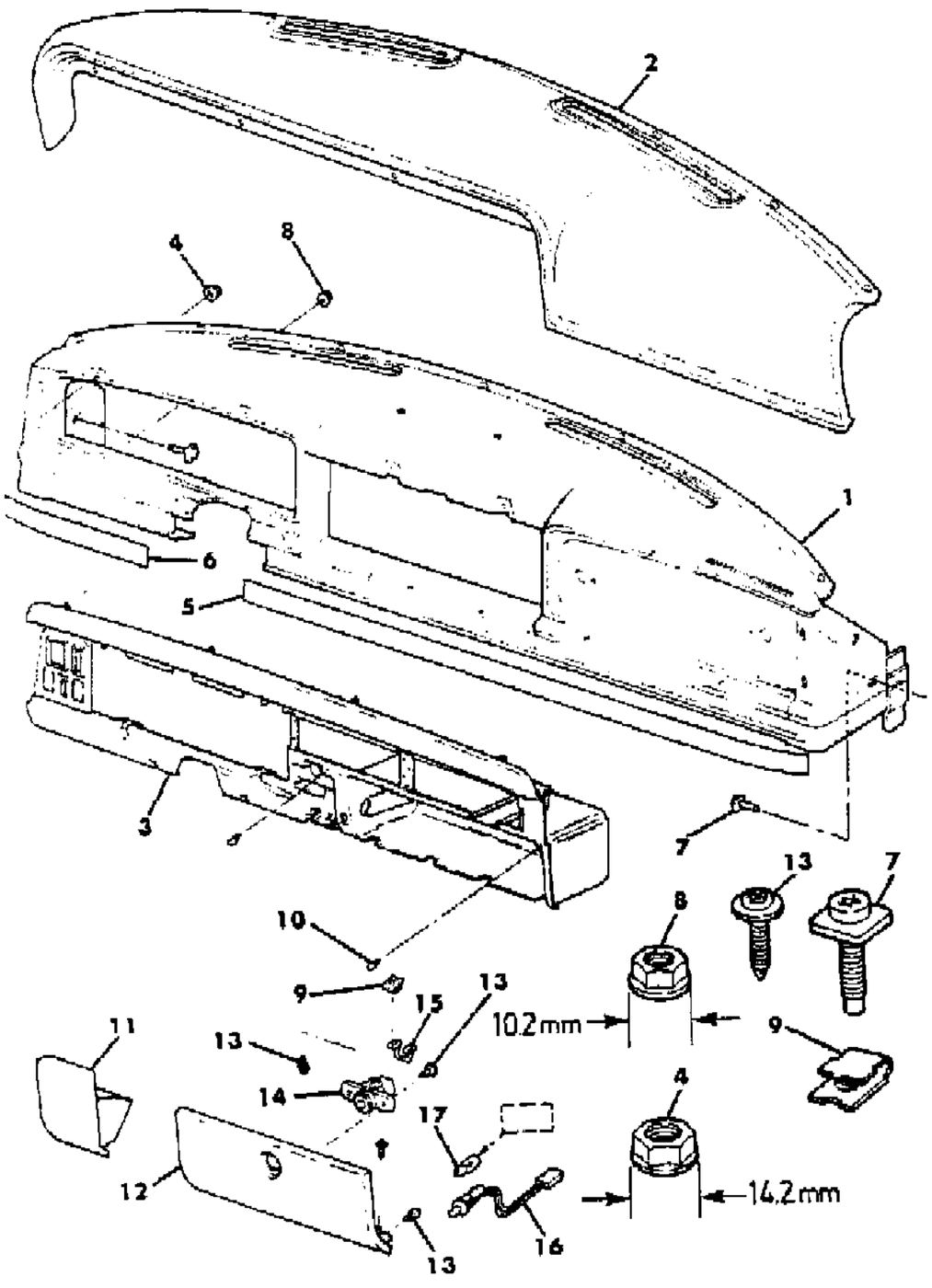

ITEM	PART NUMBER	QTY	BODY	MODEL	DESCRIPTION
1	5500 9585	1			PANEL, Instrument
2	5500 7705	1			PAD
3	5500 9743	1			BEZEL
4	1150 3745	4			NUT
5					APPLIQUE
	5501 0052	1		15	
	5501 3098	1		26,27	
6					APPLIQUE
	5501 0053	1		15	
	5501 3099	1		26,27	
7	J400 5885	2			SCREW
8	3420 1461	3			NUT
9	3420 1820	2			NUT
10	J400 0093	4			BUMPER
11	5500 7695	1			RECEIVER, Ash
12	5500 7696	1			DOOR, Glovebox
13	J400 3671	AR			SCREW
14	J363 2495	1			HOUSING, Glovebox Lock
15	J363 2496	1			STRIKER, Glovebox Lock
16	3600 1627	1			SWITCH, Glovebox Lamp
17	J345 1933	1			BULB, #1893

MODEL CODES
16=Cherokee 2 Dr.(1981-83)
17=Cherokee 2 Dr.(1981-83)
73=Cherokee 2WD-2 Dr.(1984-86)
74=Cherokee 2WD-4 Dr.(1984-86)
18=Cherokee 4 Dr.(1981-83)
77=Cherokee 4WD-2 Dr.(1984-86)
78=Cherokee 4WD-4 Dr.(1984-86)
85=CJ-5 (1981-83)
86=CJ-6(1981)
87=CJ-7(1981-86)
88=CJ-8, Scrambler(1981-86)
64=Comanche 2WD-6 Ft. Box(1986)
66=Comanche 2WD-7 Ft. Box(1986)
63=Comanche 4WD-6 Ft. Box(1986)
65=Comanche 4WD-7 Ft. Box(1986)
15=Grand Wagoneer 4 Dr.(1984-86)
25=J-10 Truck 7 Ft. Box(1981-84)
26=J10 Truck 8 Ft. Box(1981-86)
27=J-20 Truck 8 Ft. Box(1981-86)
15=Wagoneer 4 Dr.(1981-83)
75=Wagoneer 4WD-4 Dr.(1984-86)

BODY
CJ=CJ-5, CJ-6, CJ-7, CJ-8, Scrambler(1981-86)
MJ=Comanche Pickup(1986)

STYLES
SJ=Wagoneer(1981-83), Grand Wagoneer(1984-86), Cherokee(1981-83), J-10, J-20(1981-86)
XJ=Wagoneer(1984-86), Cherokee(1984-86)

AR = Use as Required - = Non Illustrated Part P.A.R. = Paint as Required

« RETURN TO GROUP INDEX

INSTRUMENT PANEL, 1981-85 SWITCHES SJ CHEROKEE, SJ WAGONEER, J10, J20
Figure 8A-2800

81J 082 2800

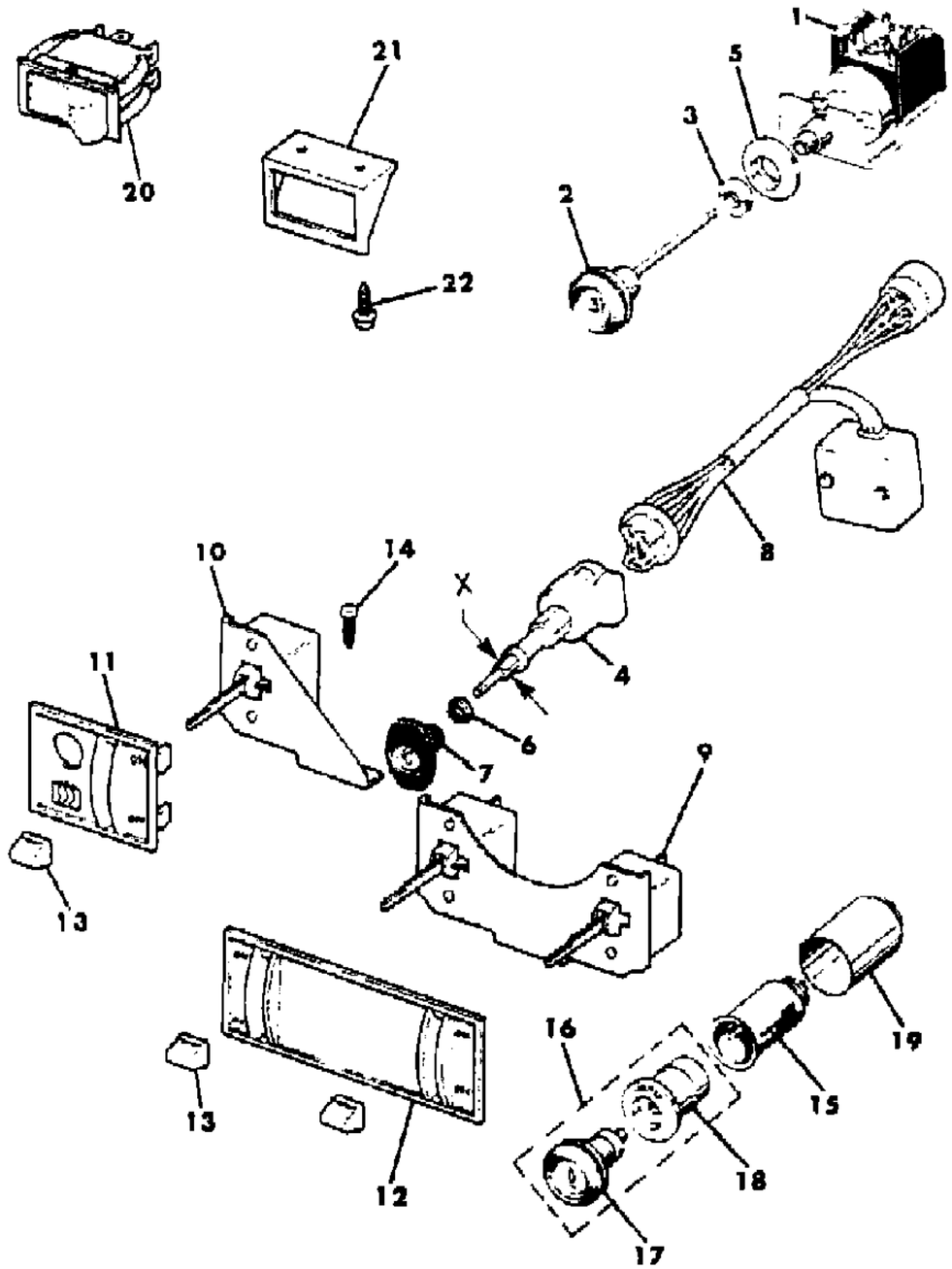

ITEM	PART NUMBER	QTY	BODY	MODEL	DESCRIPTION
1	J575 1098	1			SWITCH, Head Lamp
2	J575 2810	1			KNOB, Headlamp Switch
	J545 7882	1			EXPORT, Right Hand Drive
3	J400 0056	1			NUT
4					SWITCH, Wiper
					Without Intermittent Wipers
	J575 0036	1			1/2"-20
	J575 8687	1			3/8"-24
					With Intermittent Wipers
	J575 0035	1			1/2"-20
	J575 8689	1			3/8"-24
5	J098 7911	1			BEZEL
6					NUT
	J400 5614	1			1/2"-20
	J400 056	1			3/8"-24
7	J545 9189	1			KNOB
	J546 1524	1			EXPORT
8	J371 4496	1			GOVERNOR, Intermittent Wiper ***
9	J546 5054	1			SWITCH, Tailgate Glass
10	J546 5057	1			SWITCH, Defogger
11	J575 2832	1			BEZEL
12	J575 2831	1			BEZEL
13	J360 1632	AR			KNOB
14	J097 4538	1			SCREW
15	J545 9220	1			BASE
16	J545 9235	1			LIGHTER, Cigar ***
17	J545 7866	1			KNOB
18	J098 9665	1			ELEMENT
19	J357 6049	1			HOUSING
20	J575 6866	1			SWITCH, Foglamp
21	J575 6867	1			BRACKET
22					SCREW
	J812 0052	2			Without Factory Air Conditioning
	J400 6630	2			With Factory Air Conditioning

MODEL CODES

16=Cherokee 2 Dr.(1981-83)
17=Cherokee 2 Dr.(1981-83)
73=Cherokee 2WD-2 Dr.(1984-86)
74=Cherokee 2WD-4 Dr.(1984-86)
18=Cherokee 4 Dr.(1981-83)
77=Cherokee 4WD-2 Dr.(1984-86)
78=Cherokee 4WD-4 Dr.(1984-86)
85=CJ-5 (1981-83)
86=CJ-6(1981)
87=CJ-7(1981-86)
88=CJ-8, Scrambler(1981-86)
64=Comanche 2WD-6 Ft. Box(1986)
66=Comanche 2WD-7 Ft. Box(1986)
63=Comanche 4WD-6 Ft. Box(1986)
65=Comanche 4WD-7 Ft. Box(1986)
15=Grand Wagoneer 4 Dr.(1984-86)
25=J-10 Truck 7 Ft. Box(1981-84)
26=J10 Truck 8 Ft. Box(1981-86)
27=J-20 Truck 8 Ft. Box(1981-86)
15=Wagoneer 4 Dr.(1981-83)
75=Wagoneer 4WD-4 Dr.(1984-86)

BODY
CJ=CJ-5, CJ-6, CJ-7, CJ-8, Scrambler(1981-86)
MJ=Comanche Pickup(1986)

STYLES
SJ=Wagoneer(1981-83), Grand Wagoneer(1984-86), Cherokee(1981-83), J-10, J-20(1981-86)
XJ=Wagoneer(1984-86), Cherokee(1984-86)

AR = Use as Required - = Non Illustrated Part P.A.R. = Paint as Required

« RETURN TO GROUP INDEX

INSTRUMENT PANEL, 1986 SWITCHES SJ WAGONEER, J10, J20
Figure 8A-2900

81J 082 2900

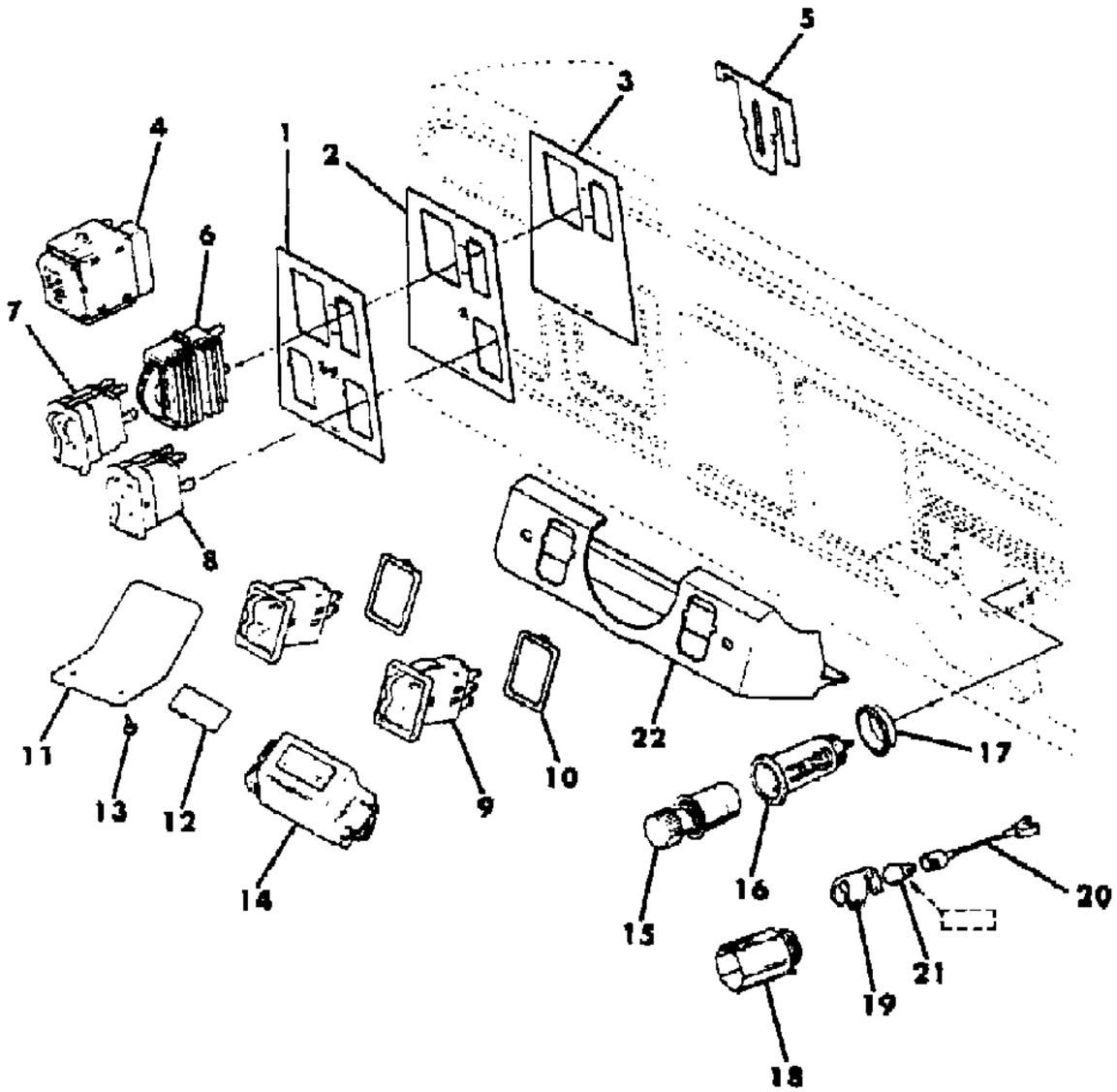

ITEM	PART NUMBER	QTY	BODY	MODEL	DESCRIPTION
1	5500 7691	1			LENS, Head Lamp Identification
2	5500 9227	1			LENS, Head Lamp Identification
3	5500 9108	1			LENS, Head Lamp Identification
4	5600 1861	1			SWITCH, Head Lamp
5	5600 2010	1			RETAINER
6	5600 1863	1			RHEOSTAT
7	5600 0030	1			SWITCH, Defogger
8	5600 1526	1			SWITCH, Window
9	5600 0025	1			SWITCH, Fog Lamp
10	5500 3005	1			COVER, Switch Opening
11	5600 2081	1			BRACKET
12	J368 9091	1			FASTENER
13	J942 1073	2			SCREW
14	5600 2692	1			GOVERNOR, Intermittent Wiper ***
15	3600 0280	1			LIGHTER, Cigar ***
16	J345 3270	1			HOUSING, Lighter
17	3500 1906	1			RING, Illumination
18	3600 0242	1			CLAMP, Lighter
19	3600 0268	1			SHIELD, Bulb
20	3600 0279	1			SOCKET
21	J013 1282	1			BULB #53 ***
22	5500 9633	1			COVER

MODEL CODES

16=Cherokee 2 Dr.(1981-83)
17=Cherokee 2 Dr.(1981-83)
73=Cherokee 2WD-2 Dr.(1984-86)
74=Cherokee 2WD-4 Dr.(1984-86)
18=Cherokee 4 Dr.(1981-83)
77=Cherokee 4WD-2 Dr.(1984-86)
78=Cherokee 4WD-4 Dr.(1984-86)
85=CJ-5 (1981-83)
86=CJ-6(1981)
87=CJ-7(1981-86)
88=CJ-8, Scrambler(1981-86)
64=Comanche 2WD-6 Ft. Box(1986)
66=Comanche 2WD-7 Ft. Box(1986)
63=Comanche 4WD-6 Ft. Box(1986)
65=Comanche 4WD-7 Ft. Box(1986)
15=Grand Wagoneer 4 Dr.(1984-86)
25=J-10 Truck 7 Ft. Box(1981-84)
26=J10 Truck 8 Ft. Box(1981-86)
27=J-20 Truck 8 Ft. Box(1981-86)
15=Wagoneer 4 Dr.(1981-83)
75=Wagoneer 4WD-4 Dr.(1984-86)

BODY

CJ=CJ-5, CJ-6, CJ-7, CJ-8, Scrambler(1981-86)
MJ=Comanche Pickup(1986)

STYLES

SJ=Wagoneer(1981-83), Grand Wagoneer(1984-86), Cherokee(1981-83), J-10, J-20(1981-86)
XJ=Wagoneer(1984-86), Cherokee(1984-86)

AR = Use as Required - = Non Illustrated Part P.A.R. = Paint as Required

« RETURN TO GROUP INDEX

FUSE PANEL SJ CHEROKEE, SJ WAGONEER, J10, J20
Figure 8A-3000

81J 082 3000

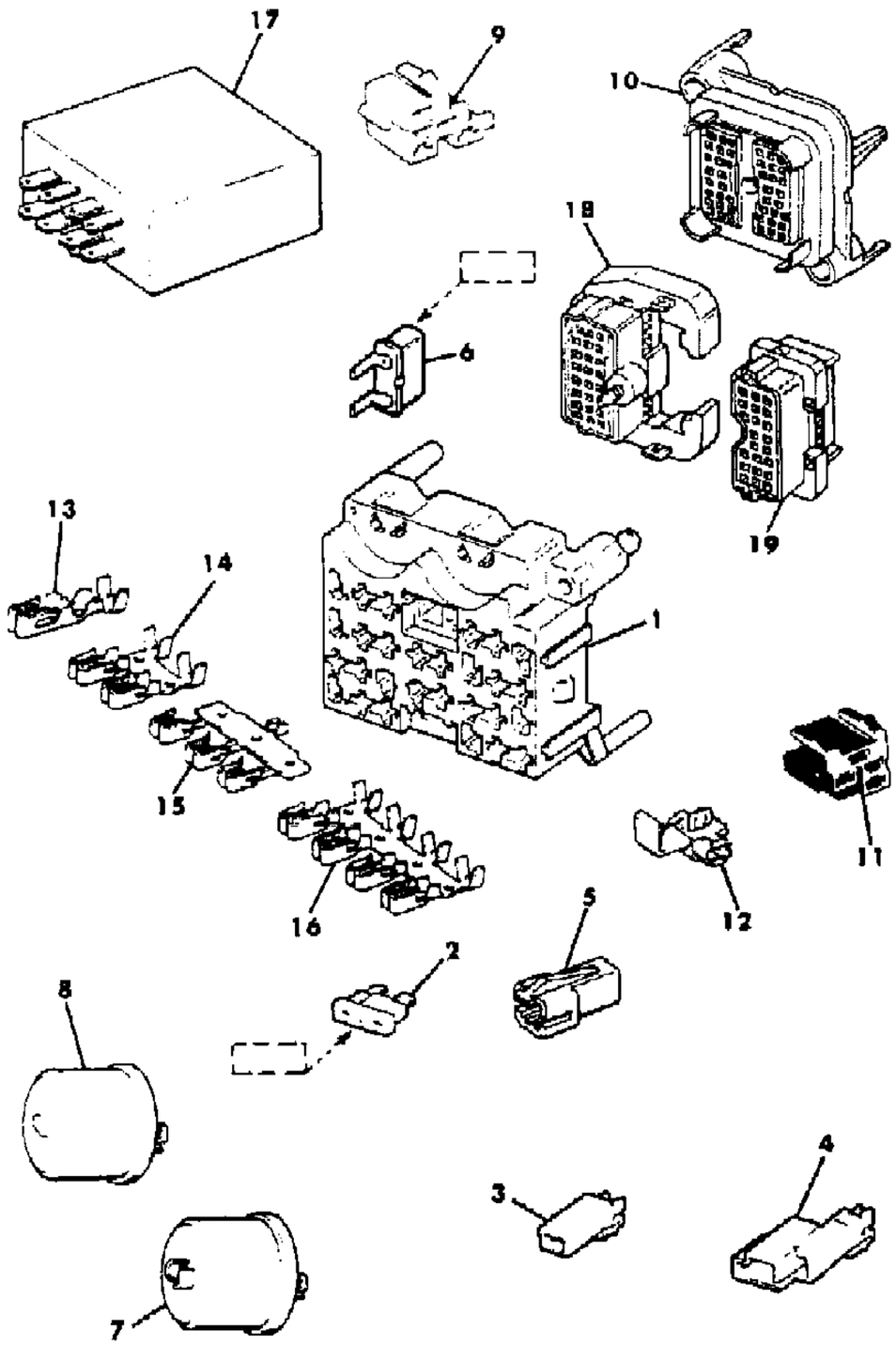

ITEM	PART NUMBER	QTY	BODY	MODEL	DESCRIPTION
1	J575 0329	1			PANEL, Fuse
2					FUSE
	J323 1211	AR			3 Amp.
	J323 1215	AR			10 Amp.
	J323 1216	AR			15 Amp.
	J323 1217	AR			20 Amp.
	J323 1218	AR			25 Amp.
3					CONNECTOR
	J323 1235	AR			Black
	J323 1238	AR			Blue
	J323 1239	AR			Brown
	J323 1236	AR			Green
	J323 1237	AR			Natural
	J323 1234	AR			Orange
	J323 1233	AR			Red
4					CONNECTOR
	J323 1881	AR			Brown
	J417 9632	AR			Natural
	J323 1882	AR			Red
5	J575 0947	AR			CONNECTOR
6	J323 4524	1			BREAKER, Circuit
7	J545 2266	1			FLASHER, Hazard
8					FLASHER, Turn Signal
	J321 2068	1			Without Trailer Tow
	J322 6900	1			With Trailer Tow
9	J448 8006	AR			CONNECTOR
10	J417 8280	AR			CONNECTOR, Bulkhead
11	J448 8007	AR			CONNECTOR
12	J318 6888	AR			CONNECTOR, Splice
13	J323 1223	AR			TERMINAL
14	J323 1224	AR			TERMINAL
15	J323 1225	AR			TERMINAL
16	J413 6912	AR			TERMINAL
17	5600 0562	1			CHIME, Warning ***
18	J417 9420	1			CONNECTOR, Bulkhead
19	J417 9421	1			CONNECTOR, Bulkhead

MODEL CODES

16=Cherokee 2 Dr.(1981-83)
17=Cherokee 2 Dr.(1981-83)
73=Cherokee 2WD-2 Dr.(1984-86)
74=Cherokee 2WD-4 Dr.(1984-86)
18=Cherokee 4 Dr.(1981-83)
77=Cherokee 4WD-2 Dr.(1984-86)
78=Cherokee 4WD-4 Dr.(1984-86)
85=CJ-5 (1981-83)
86=CJ-6(1981)
87=CJ-7(1981-86)
88=CJ-8, Scrambler(1981-86)
64=Comanche 2WD-6 Ft. Box(1986)
66=Comanche 2WD-7 Ft. Box(1986)
63=Comanche 4WD-6 Ft. Box(1986)
65=Comanche 4WD-7 Ft. Box(1986)
15=Grand Wagoneer 4 Dr.(1984-86)
25=J-10 Truck 7 Ft. Box(1981-84)
26=J10 Truck 8 Ft. Box(1981-86)
27=J-20 Truck 8 Ft. Box(1981-86)
15=Wagoneer 4 Dr.(1981-83)
75=Wagoneer 4WD-4 Dr.(1984-86)

BODY
CJ=CJ-5, CJ-6, CJ-7, CJ-8, Scrambler(1981-86)
MJ=Comanche Pickup(1986)

STYLES
SJ=Wagoneer(1981-83), Grand Wagoneer(1984-86), Cherokee(1981-83), J-10, J-20(1981-86)
XJ=Wagoneer(1984-86), Cherokee(1984-86)

AR = Use as Required - = Non Illustrated Part P.A.R. = Paint as Required

« RETURN TO GROUP INDEX

INSTRUMENT CLUSTER, 1981-85 SJ CHEROKEE, SJ WAGONEER, J10, J20
Figure 8A-3100

81J 082 3100

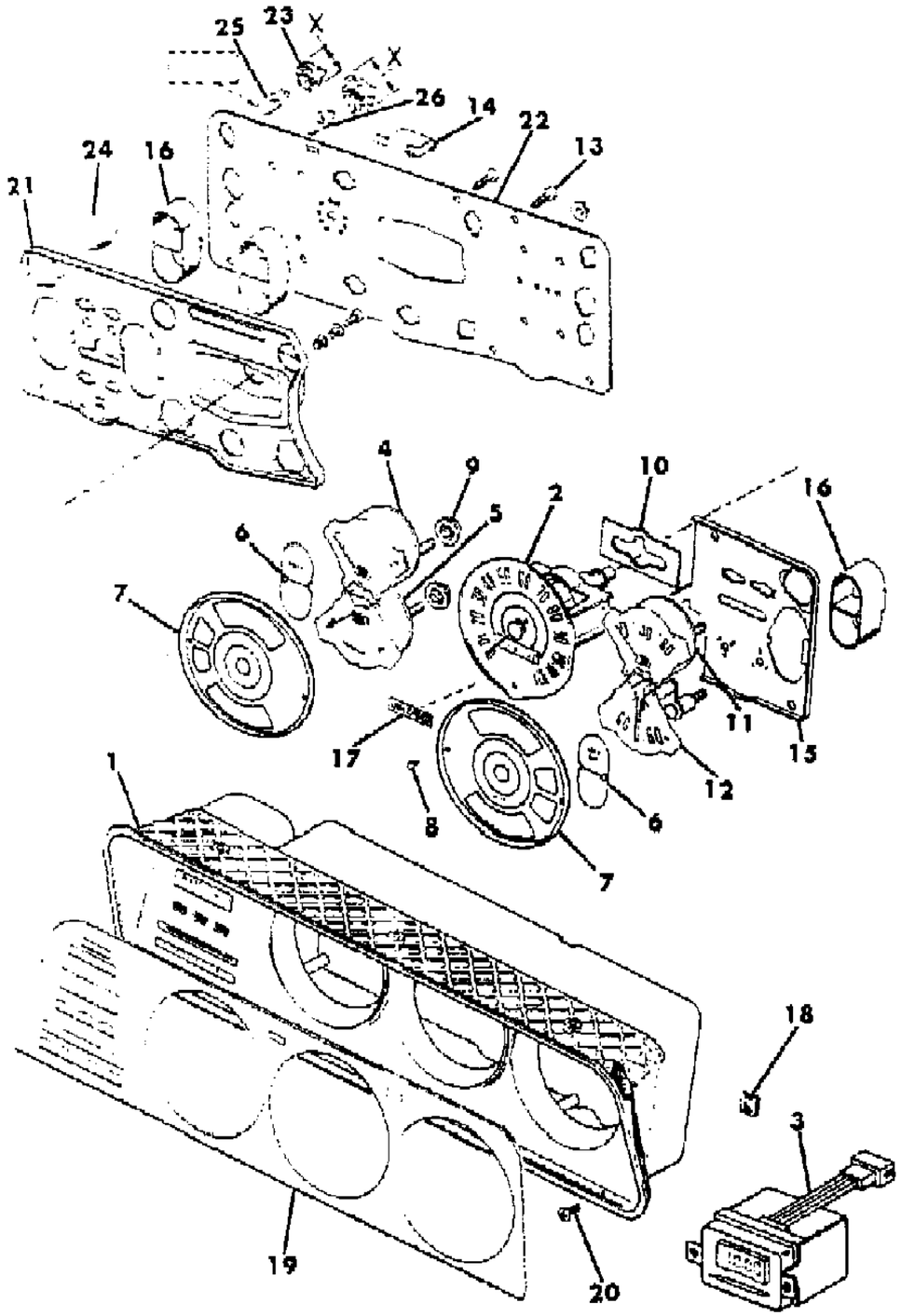

ITEM	PART NUMBER	QTY	BODY	MODEL	DESCRIPTION
1	J575 6755	1			BEZEL, Cluster
2					SPEEDOMETER
	J813 1749	1			1981, 85 Mph.
	J813 4124	1			1982-84, 85 Mph.
	8350 1427	1			1985, 100 Mph.
	J813 1751	1			1981, EXPORT, 100 Mph.
	J813 4126	1			1982-85, EXPORT, 100 Mph.
	J813 0355	1			1981, Kilometers
	J813 4125	1			1982-84, Kilometers
	8350 1438	1			1985, Kilometers
3	J575 1038	1			CLOCK
4					GAUGE, Fuel
	J812 6927	1			1981-84
	8350 1434	1			1985
5					GAUGE, Temperature
	J812 6928	1			1981-84
	8350 1428	1			1985
6					LENS
	J813 4419	1			Brake
	J813 1748	1			4 WD
7					BEZEL
					Oil/Amp.
	J813 4297	1			1981-84
	8350 1440	1			1985
					Fuel/Temp.
	J813 4296	1			1981-84
	8350 1439	1			1985
8	J320 6024	1			SCREW
9	J320 8221	AR			NUT
10	J320 8225	1			GASKET
11					GAUGE, Oil
	J812 6929	1			1981-84
	8350 1435	1			1985
12					GAUGE, Ammeter
	J812 6926	1			1981-84
	8350 1436	1			1985
13	J400 2657	AR			SCREW
14	J353 0506	1			SUPPRESSOR
15	J812 2478	1			PLATE

MODEL CODES

16=Cherokee 2 Dr.(1981-83)	78=Cherokee 4WD-4 Dr.(1984-86)	64=Comanche 2WD-6 Ft. Box(1986)	25=J-10 Truck 7 Ft. Box(1981-84)
17=Cherokee 2 Dr.(1981-83)	85=CJ-5 (1981-83)	66=Comanche 2WD-7 Ft. Box(1986)	26=J10 Truck 8 Ft. Box(1981-86)
73=Cherokee 2WD-2 Dr.(1984-86)	86=CJ-6(1981)	63=Comanche 4WD-6 Ft. Box(1986)	27=J-20 Truck 8 Ft. Box(1981-86)
74=Cherokee 2WD-4 Dr.(1984-86)	87=CJ-7(1981-86)	65=Comanche 4WD-7 Ft. Box(1986)	15=Wagoneer 4 Dr.(1981-83)
18=Cherokee 4 Dr.(1981-83)	88=CJ-8, Scrambler(1981-86)	15=Grand Wagoneer 4 Dr.(1984-86)	75=Wagoneer 4WD-4 Dr.(1984-86)
77=Cherokee 4WD-2 Dr.(1984-86)			

BODY
CJ=CJ-5, CJ-6, CJ-7, CJ-8, Scrambler(1981-86)
MJ=Comanche Pickup(1986)

STYLES
SJ=Wagoneer(1981-83), Grand Wagoneer(1984-86), Cherokee(1981-83), J-10, J-20(1981-86)
XJ=Wagoneer(1984-86), Cherokee(1984-86)

AR = Use as Required - = Non Illustrated Part P.A.R. = Paint as Required

« RETURN TO GROUP INDEX »

INSTRUMENT CLUSTER, 1981-85 SJ CHEROKEE, SJ WAGONEER, J10, J20
Figure 8A-3100

81J 082 3100

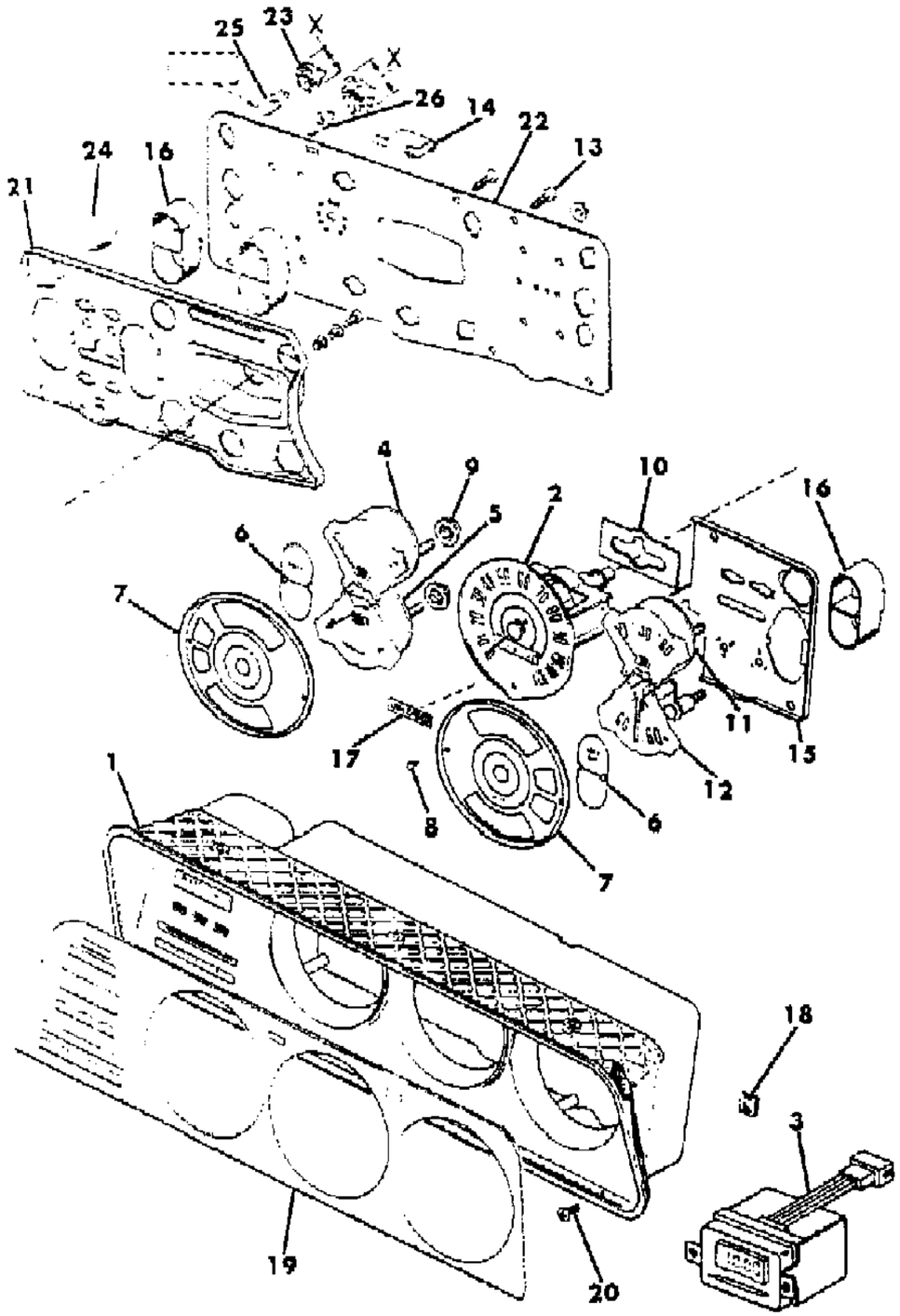

ITEM	PART NUMBER	QTY	BODY	MODEL	DESCRIPTION
16	J448 7986	1			HOUSING, Warning Lamp
17	J546 1055	1			LABEL, Unleaded Fuel
18	S044 5388	AR			NUT
19					OVERLAY ***
	J575 8231	1			Engine Turned
	J575 2857	1			Woodgrain
20	J400 2657	AR			SCREW
21	J812 6932	1			CASE
22					PRINTED CIRCUIT ***
	J812 6935	1			1981-83
	8350 2520	1			1984-85
23	J448 7985	1			SOCKET
24	J812 6930	1			FILTER
25					BULB
	J013 1282	AR			#53
	J093 6653	AR			#158
	J045 4626	AR			#1816
	J575 6859	AR			#756
26	J812 2474	1			SOCKET

MODEL CODES

16=Cherokee 2 Dr.(1981-83)
17=Cherokee 2 Dr.(1981-83)
73=Cherokee 2WD-2 Dr.(1984-86)
74=Cherokee 2WD-4 Dr.(1984-86)
18=Cherokee 4 Dr.(1981-83)
77=Cherokee 4WD-2 Dr.(1984-86)
78=Cherokee 4WD-4 Dr.(1984-86)
85=CJ-5 (1981-83)
86=CJ-6(1981)
87=CJ-7(1981-86)
88=CJ-8, Scrambler(1981-86)
64=Comanche 2WD-6 Ft. Box(1986)
66=Comanche 2WD-7 Ft. Box(1986)
63=Comanche 4WD-6 Ft. Box(1986)
65=Comanche 4WD-7 Ft. Box(1986)
15=Grand Wagoneer 4 Dr.(1984-86)
25=J-10 Truck 7 Ft. Box(1981-84)
26=J10 Truck 8 Ft. Box(1981-86)
27=J-20 Truck 8 Ft. Box(1981-86)
15=Wagoneer 4 Dr.(1981-83)
75=Wagoneer 4WD-4 Dr.(1984-86)

BODY
CJ=CJ-5, CJ-6, CJ-7, CJ-8, Scrambler(1981-86)
MJ=Comanche Pickup(1986)

STYLES
SJ=Wagoneer(1981-83), Grand Wagoneer(1984-86), Cherokee(1981-83), J-10, J-20(1981-86)
XJ=Wagoneer(1984-86), Cherokee(1984-86)

AR = Use as Required - = Non Illustrated Part P.A.R. = Paint as Required

« RETURN TO GROUP INDEX

INSTRUMENT CLUSTER, 1986 SJ WAGONEER, J10, J20
Figure 8A-3200

81J 082 3200

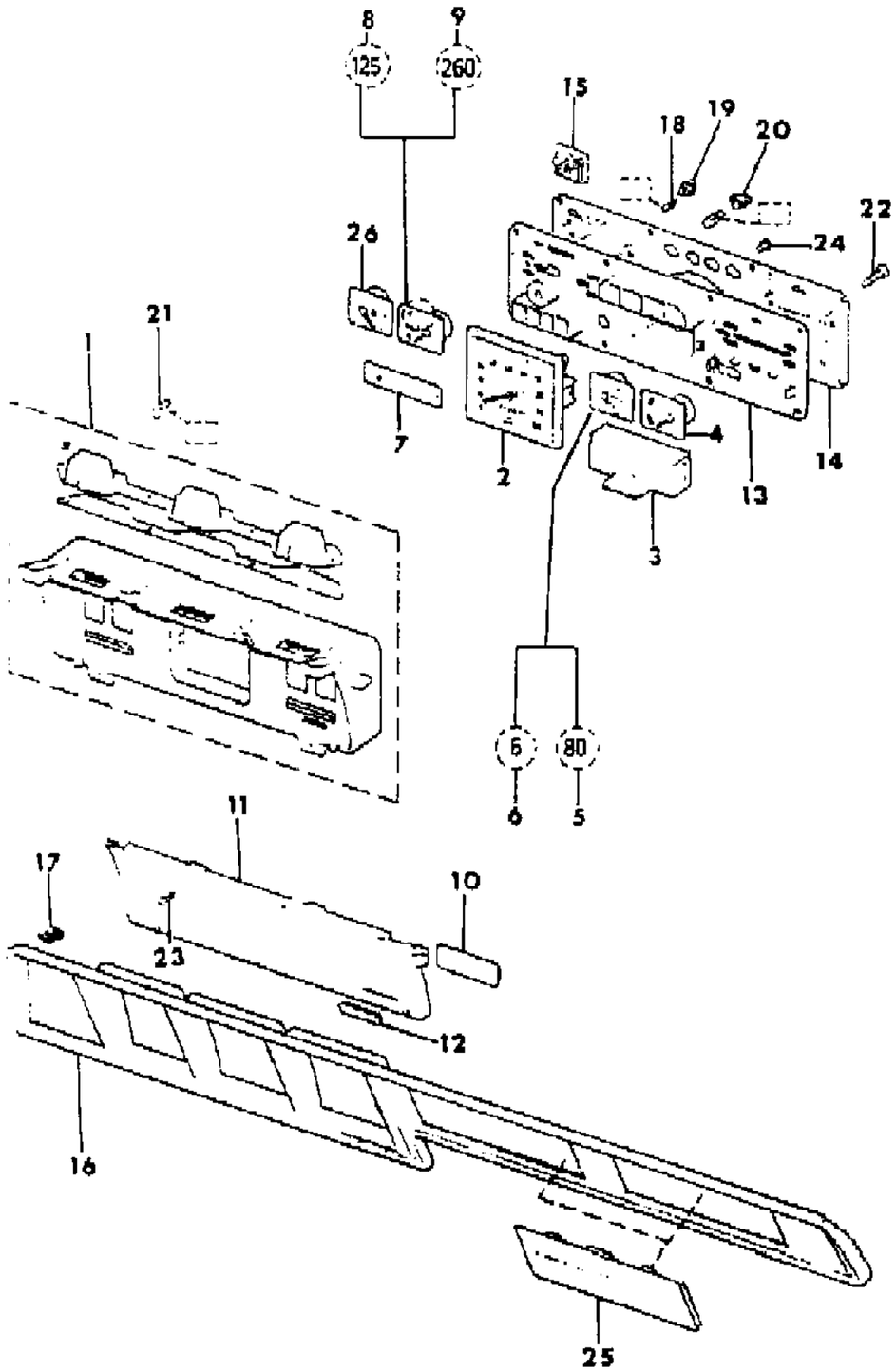

ITEM	PART NUMBER	QTY	BODY	MODEL	DESCRIPTION
1					BEZEL, Cluster
	8350 2539	1			U.S.
	8350 2539	1			Canada
2					SPEEDOMETER
	8350 2521	1			Miles
	8350 2530	1			Kilometers
3	8350 2523	1			CLOCK
4	8350 2525	1			VOLTMETER ***
5	8350 2528	1			GAUGE, Oil
6	8350 2532	1			GAUGE, Oil
7					FILTER, Warning Lamp
	8350 2541	1			U.S.
	8350 2533	1			Canada, EXPORT
8	8350 2531	1			GAUGE, Temperature
9	8350 2527	1			GAUGE, Temperature
10	8350 2536	1			COVER, Clock
11	8350 2529	1			LENS, Cluster
12	8350 2537	1			COVER, Clock
13	8350 2540	1			HOUSING, Cluster
14	8350 2522	1			PRINTED CIRCUIT ***
15	8350 2524	1			MODULE, Low Fuel Warning Lamp
16	5500 7690	1			OVERLAY ***
17	3420 2502	AR			CLIP, Retaining
18	J812 5723	AR			BULB #74 ***
19	3600 0091	AR			SOCKET
20	J369 7186	AR			SOCKET
21	J942 1330	AR			BULB #194 ***
22	J400 2657	AR			SCREW
23	J812 8911	AR			SCREW
24	J080 3366	2			SCREW
25	5500 9106	2			COVER
26	8350 2526	1			GAUGE, Fuel

MODEL CODES

16=Cherokee 2 Dr.(1981-83)
17=Cherokee 2 Dr.(1981-83)
73=Cherokee 2WD-2 Dr.(1984-86)
74=Cherokee 2WD-4 Dr.(1984-86)
18=Cherokee 4 Dr.(1981-83)
77=Cherokee 4WD-2 Dr.(1984-86)
78=Cherokee 4WD-4 Dr.(1984-86)
85=CJ-5 (1981-83)
86=CJ-6(1981)
87=CJ-7(1981-86)
88=CJ-8, Scrambler(1981-86)
64=Comanche 2WD-6 Ft. Box(1986)
66=Comanche 2WD-7 Ft. Box(1986)
63=Comanche 4WD-6 Ft. Box(1986)
65=Comanche 4WD-7 Ft. Box(1986)
15=Grand Wagoneer 4 Dr.(1984-86)
25=J-10 Truck 7 Ft. Box(1981-84)
26=J10 Truck 8 Ft. Box(1981-86)
27=J-20 Truck 8 Ft. Box(1981-86)
15=Wagoneer 4 Dr.(1981-83)
75=Wagoneer 4WD-4 Dr.(1984-86)

BODY
CJ=CJ-5, CJ-6, CJ-7, CJ-8, Scrambler(1981-86)
MJ=Comanche Pickup(1986)

STYLES
SJ=Wagoneer(1981-83), Grand Wagoneer(1984-86), Cherokee(1981-83), J-10, J-20(1981-86)
XJ=Wagoneer(1984-86), Cherokee(1984-86)

AR = Use as Required - = Non Illustrated Part P.A.R. = Paint as Required

« RETURN TO GROUP INDEX

SPEAKER AND RADIO KNOBS SJ CHEROKEE, SJ WAGONEER, J10, J20
Figure 8A-3300

81J 082 3300

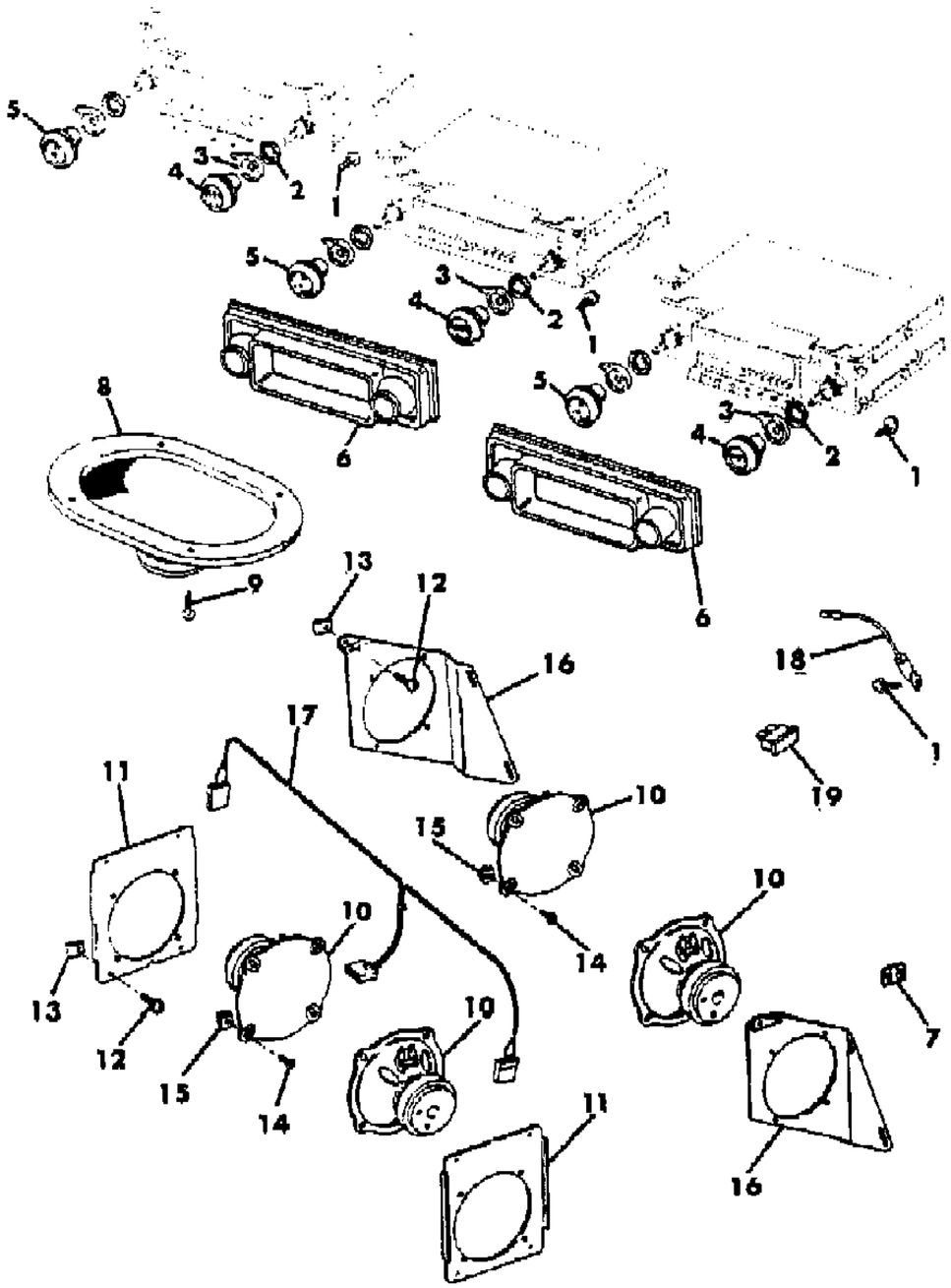

ITEM	PART NUMBER	QTY	BODY	MODEL	DESCRIPTION
1	J940 9106	1			SCREW
2	J400 6185	2			NUT
3	J546 2730	2			KNOB, Secondary
4					KNOB, Tuning
	J323 3033	1			1/2" Long
	J545 9113	1			1" Long
5					KNOB, Volume
	J323 3033	1			1/2" Long
	J545 9112	1			1" Long
6					BEZEL, Trim
	J546 4541	1			Type 2
					Type 3
	J576 1734	1			Black
	J576 1737	1			Blue
	J576 1736	1			Brown
	J576 5340	1			Garnet
	J576 5338	1			Honey
	J576 1735	1			Nutmeg
7	J353 0506	1			SUPPRESSOR, Noise
8	J545 5262	1			SPEAKER
9	J098 4326	AR			SCREW
10					SPEAKER
	J575 6851	AR			1981-85, With Power Amp., Etr Radio
	J576 2589	1			1981-85, Without Power Amp., Etr Radio
	3600 1125	AR			1986, With Stereo/Etr Radio
	5600 1879	AR			1986, With Am Radio
11	J545 6511	2			BRACKET, Speaker
12	J045 7002	AR			SCREW
13	J943 1530	AR			NUT
14	1150 1011	AR			SCREW
15	3420 1263	AR			NUT
16					BRACKET, Speaker
	J545 6150	1			Right
	J545 6149	1			Left
17					HARNESS, Speaker
	J575 1953	1			1981-85
	5600 2029	1			1986
18	J322 9510	1			CAPACITOR, Ignition
19	J323 1213	1			FUSE

MODEL CODES

16=Cherokee 2 Dr.(1981-83)
17=Cherokee 2 Dr.(1981-83)
73=Cherokee 2WD-2 Dr.(1984-86)
74=Cherokee 2WD-4 Dr.(1984-86)
18=Cherokee 4 Dr.(1981-83)
77=Cherokee 4WD-2 Dr.(1984-86)
78=Cherokee 4WD-4 Dr.(1984-86)
85=CJ-5 (1981-83)
86=CJ-6(1981)
87=CJ-7(1981-86)
88=CJ-8, Scrambler(1981-86)
64=Comanche 2WD-6 Ft. Box(1986)
66=Comanche 2WD-7 Ft. Box(1986)
63=Comanche 4WD-6 Ft. Box(1986)
65=Comanche 4WD-7 Ft. Box(1986)
15=Grand Wagoneer 4 Dr.(1984-86)
25=J-10 Truck 7 Ft. Box(1981-84)
26=J10 Truck 8 Ft. Box(1981-86)
27=J-20 Truck 8 Ft. Box(1981-86)
15=Wagoneer 4 Dr.(1981-83)
75=Wagoneer 4WD-4 Dr.(1984-86)

BODY
CJ=CJ-5, CJ-6, CJ-7, CJ-8, Scrambler(1981-86)
MJ=Comanche Pickup(1986)

STYLES
SJ=Wagoneer(1981-83), Grand Wagoneer(1984-86), Cherokee(1981-83), J-10, J-20(1981-86)
XJ=Wagoneer(1984-86), Cherokee(1984-86)

AR = Use as Required - = Non Illustrated Part P.A.R. = Paint as Required

« RETURN TO GROUP INDEX

POWER AMPLIFIER AND FADER CONTROL FOUR SPEAKER SYSTEM SJ CHEROKEE, SJ WAGONEER, J10, J20
Figure 8A-3400

81J 082 3400

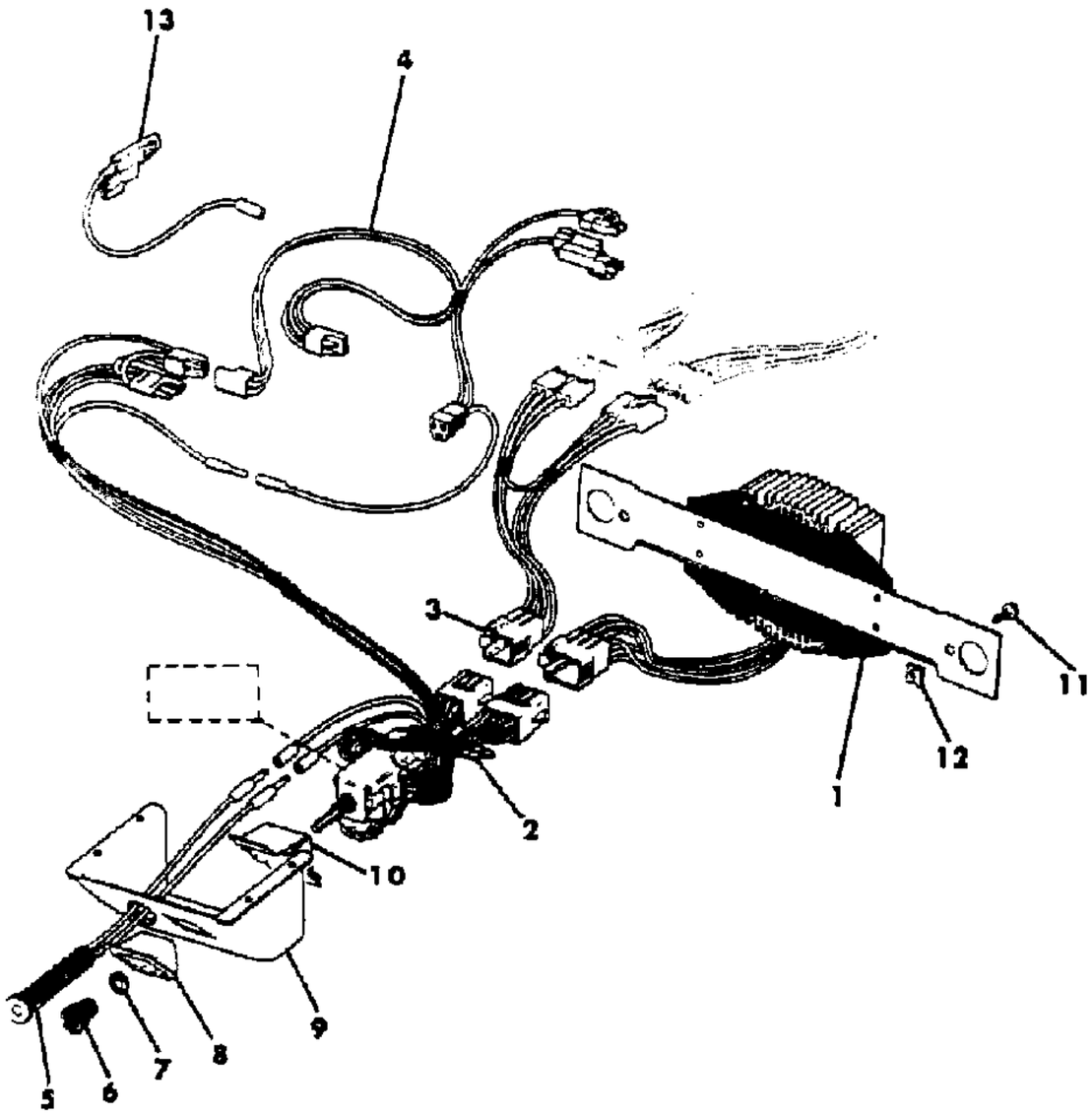

ITEM	PART NUMBER	QTY	BODY	MODEL	DESCRIPTION
1	J575 2574	1			AMPLIFIER, Power
2					SWITCH, Amplifier
	J323 6136	1			"3236136"
	J323 9758	1			"3239785"
3					HARNESS, Jumper
					Wagon
	J575 2563	1		15,16,1	With 3236136 Switch
	J575 8895	1		15,16,1	With 3239758 Switch
					Truck
	J575 6195	1		25,26,2	With 3236136 Switch
	J575 8894	1		25,26,2	With 3239758 Switch
4	J546 9897	1			HARNESS
5	J575 2538	1			LAMP, Power Amp. Indicator
6	J373 5335	1			KNOB
7	J400 6716	1			NUT
8					ESCUTCHEON
	J373 5768	1			Black
	J373 5769	1			Blue
	J374 1967	1			Blue
	J373 6240	1			Brown
	J373 6241	1			Nutmeg
9	J575 2469	1			HOUSING
10	J373 5333	1			RETAINER
11	J015 9920	2			SCREW
12	J027 1166	2			NUT
13	J575 2582	1			WIRE

MODEL CODES

16=Cherokee 2 Dr.(1981-83)
17=Cherokee 2 Dr.(1981-83)
73=Cherokee 2WD-2 Dr.(1984-86)
74=Cherokee 2WD-4 Dr.(1984-86)
18=Cherokee 4 Dr.(1981-83)
77=Cherokee 4WD-2 Dr.(1984-86)
78=Cherokee 4WD-4 Dr.(1984-86)
85=CJ-5 (1981-83)
86=CJ-6(1981)
87=CJ-7(1981-86)
88=CJ-8, Scrambler(1981-86)
64=Comanche 2WD-6 Ft. Box(1986)
66=Comanche 2WD-7 Ft. Box(1986)
63=Comanche 4WD-6 Ft. Box(1986)
65=Comanche 4WD-7 Ft. Box(1986)
15=Grand Wagoneer 4 Dr.(1984-86)
25=J-10 Truck 7 Ft. Box(1981-84)
26=J10 Truck 8 Ft. Box(1981-86)
27=J-20 Truck 8 Ft. Box(1981-86)
15=Wagoneer 4 Dr.(1981-83)
75=Wagoneer 4WD-4 Dr.(1984-86)

BODY
CJ=CJ-5, CJ-6, CJ-7, CJ-8, Scrambler(1981-86)
MJ=Comanche Pickup(1986)

STYLES
SJ=Wagoneer(1981-83), Grand Wagoneer(1984-86), Cherokee(1981-83), J-10, J-20(1981-86)
XJ=Wagoneer(1984-86), Cherokee(1984-86)

AR = Use as Required - = Non Illustrated Part P.A.R. = Paint as Required

« RETURN TO GROUP INDEX

ANTENNA SJ CHEROKEE, SJ WAGONEER, J10, J20
Figure 8A-3500

81J 082 3500

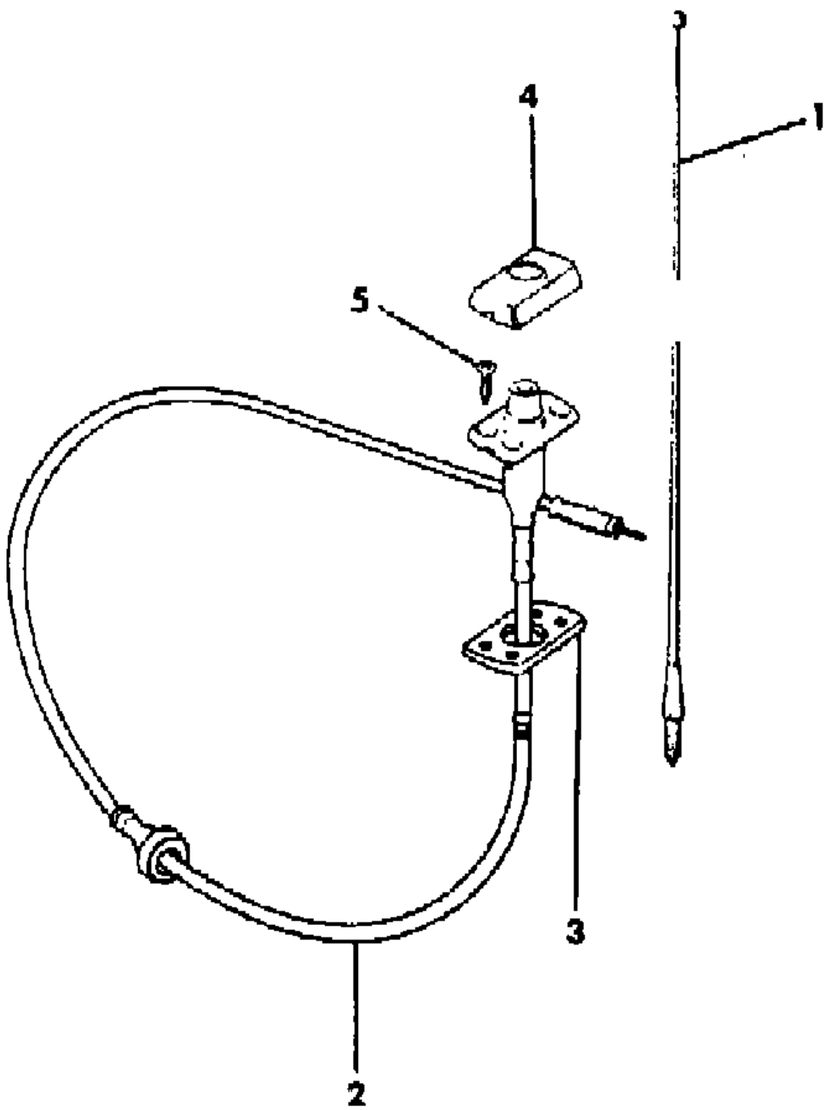

ITEM	PART NUMBER	QTY	BODY	MODEL	DESCRIPTION
1					ANTENNA
	J899 3415	1			Without CB Radio
	J899 3543	1			With CB Radio
2					BASE, With Cable
	J812 5404	1			Without CB Radio
	J812 8859	1			With CB Radio
3	J367 8887	1			PAD, Antenna
4	J367 8889	1			CAP, Antenna
5	J400 1477	AR			SCREW

MODEL CODES

16=Cherokee 2 Dr.(1981-83)
17=Cherokee 2 Dr.(1981-83)
73=Cherokee 2WD-2 Dr.(1984-86)
74=Cherokee 2WD-4 Dr.(1984-86)
18=Cherokee 4 Dr.(1981-83)
77=Cherokee 4WD-2 Dr.(1984-86)
78=Cherokee 4WD-4 Dr.(1984-86)
85=CJ-5 (1981-83)
86=CJ-6(1981)
87=CJ-7(1981-86)
88=CJ-8, Scrambler(1981-86)
64=Comanche 2WD-6 Ft. Box(1986)
66=Comanche 2WD-7 Ft. Box(1986)
63=Comanche 4WD-6 Ft. Box(1986)
65=Comanche 4WD-7 Ft. Box(1986)
15=Grand Wagoneer 4 Dr.(1984-86)
25=J-10 Truck 7 Ft. Box(1981-84)
26=J10 Truck 8 Ft. Box(1981-86)
27=J-20 Truck 8 Ft. Box(1981-86)
15=Wagoneer 4 Dr.(1981-83)
75=Wagoneer 4WD-4 Dr.(1984-86)

BODY
CJ=CJ-5, CJ-6, CJ-7, CJ-8, Scrambler(1981-86)
MJ=Comanche Pickup(1986)

STYLES
SJ=Wagoneer(1981-83), Grand Wagoneer(1984-86), Cherokee(1981-83), J-10, J-20(1981-86)
XJ=Wagoneer(1984-86), Cherokee(1984-86)

AR = Use as Required - = Non Illustrated Part P.A.R. = Paint as Required

« RETURN TO GROUP INDEX

SWITCHES SJ CHEROKEE, SJ WAGONEER, J10, J20
Figure 8A-3600

81J 082 3600

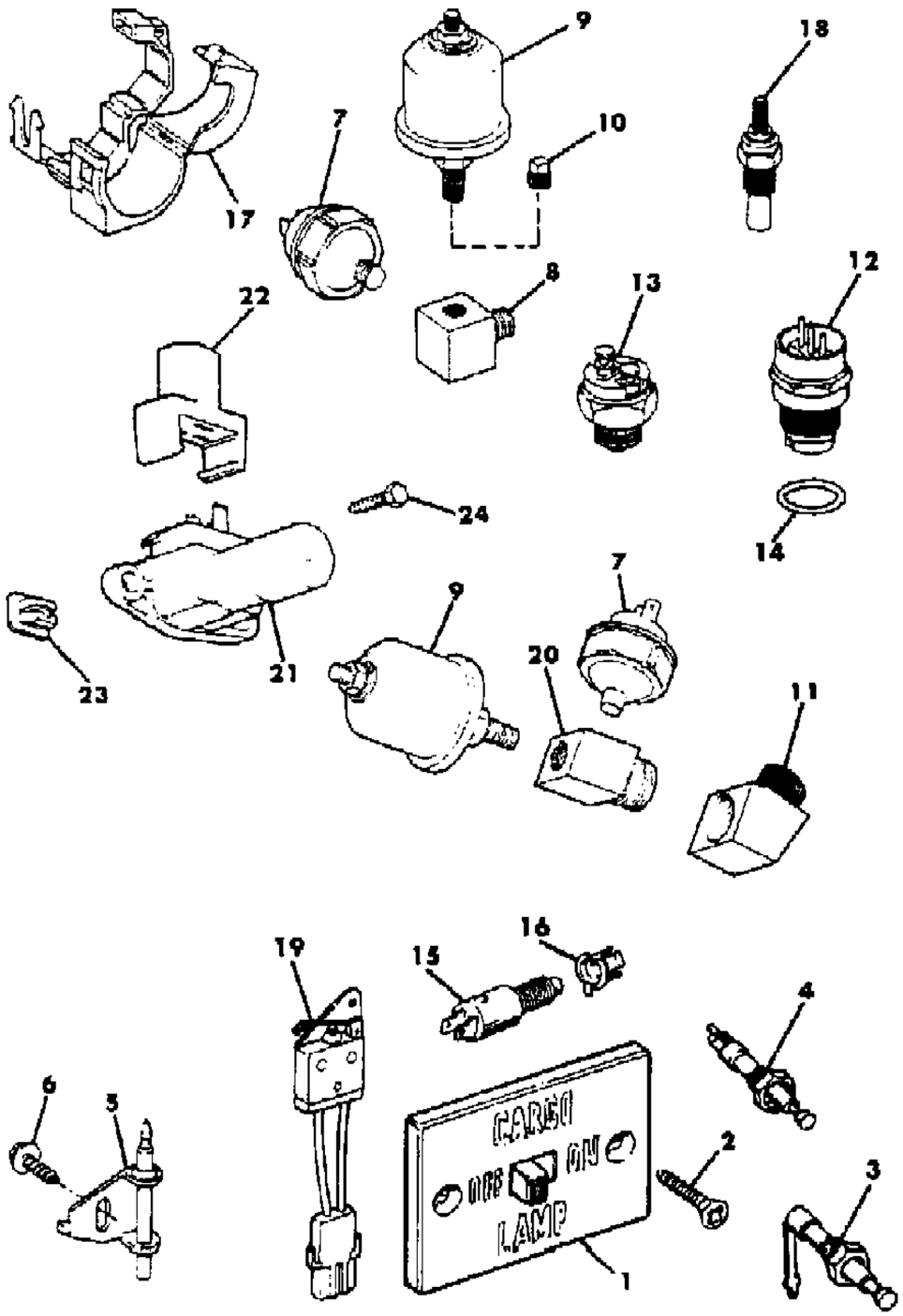

ITEM	PART NUMBER	QTY	BODY	MODEL	DESCRIPTION
1	J545 1489	1			SWITCH, Dome Lamp
2					SCREW
	J400 2657	2		15,16,1	
	J400 4955	2		25,26,2	
3	J576 1248	3			SWITCH, Dome Lamp
4	J576 4249	1			SWITCH, Dome Lamp
5	J323 2194	1			SWITCH, Park Brake Warning Lamp
6	J942 1073	1			SCREW
7					SWITCH, Oil Pressure
	J323 1347	1			1981, Three Terminal
	J575 8695	1			1981-86, Two Terminal
8	J400 6600	1			FITTING ***
9					SENDER, Oil Pressure ***
	J321 2004	1			1981-85
	5300 0834	1			1986
10	J010 3877	1			PLUG
11	J400 5879	1			FITTING ***
12	J323 2844	1			SWITCH, Neutral Safety
13	J575 1207	1			SWITCH, Back-Up Lamp
14	J812 1142	1			GASKET
15	J535 2620	1			SWITCH, Brake Lamp
16	J535 2622	1			RETAINER
17	J417 5241	1			CONNECTOR
18					SENSOR, Coolant Temp.
	J317 7594	1			1981-85
	J324 2662	1			1986
19	5600 2652	1			SWITCH, Rear Wiper, Washer, Safety
20	J400 5881	1			FITTING ***
21	J546 1816	1			SWITCH
22	J417 7111	1			CONNECTOR
23	J098 5640	1			NUT
24	S941 5260	1			SCREW

MODEL CODES

16=Cherokee 2 Dr.(1981-83)
17=Cherokee 2 Dr.(1981-83)
73=Cherokee 2WD-2 Dr.(1984-86)
74=Cherokee 2WD-4 Dr.(1984-86)
18=Cherokee 4 Dr.(1981-83)
77=Cherokee 4WD-2 Dr.(1984-86)
78=Cherokee 4WD-4 Dr.(1984-86)
85=CJ-5 (1981-83)
86=CJ-6(1981)
87=CJ-7(1981-86)
88=CJ-8, Scrambler(1981-86)
64=Comanche 2WD-6 Ft. Box(1986)
66=Comanche 2WD-7 Ft. Box(1986)
63=Comanche 4WD-6 Ft. Box(1986)
65=Comanche 4WD-7 Ft. Box(1986)
15=Grand Wagoneer 4 Dr.(1984-86)
25=J-10 Truck 7 Ft. Box(1981-84)
26=J10 Truck 8 Ft. Box(1981-86)
27=J-20 Truck 8 Ft. Box(1981-86)
15=Wagoneer 4 Dr.(1981-83)
75=Wagoneer 4WD-4 Dr.(1984-86)

BODY
CJ=CJ-5, CJ-6, CJ-7, CJ-8, Scrambler(1981-86)
MJ=Comanche Pickup(1986)

STYLES
SJ=Wagoneer(1981-83), Grand Wagoneer(1984-86), Cherokee(1981-83), J-10, J-20(1981-86)
XJ=Wagoneer(1984-86), Cherokee(1984-86)

AR = Use as Required - = Non Illustrated Part P.A.R. = Paint as Required

« RETURN TO GROUP INDEX

ILLUSTRATION NOT AVAILABLE AT TIME OF PUBLICATION

GROUP 9A - ENGINE, 4 CYLINDER

ILLUSTRATION TITLE	GROUP-FIG. NO.
CJ FOUR CYLINDER ENGINES	
ENGINE, FOUR CYLINDER CJ-5,6,7,8, SCRAMBLER	Fig. 9A-100
BLOCK, ENGINE 1981-85 ISUZU DIESEL, EXPORT CJ-5,6,7,8	Fig. 9A-200
GASKET SET 1981-85 ISUZU DIESEL, EXPORT CJ-5,6,7,8	Fig. 9A-300
CYLINDER HEAD 1981-85 ISUZU DIESEL, EXPORT CJ-5,6,7,8	Fig. 9A-400
CRANKSHAFT, FLYWHEEL AND PISTON 1981-85 ISUZU DIESEL, EXPORT CJ-5,6,7,8	Fig. 9A-500
CAMSHAFT AND VALVES 1981-85 ISUZU DIESEL, EXPORT CJ-5,6,7,8	Fig. 9A-600
ENGINE OILING 1981-85 ISUZU DIESEL, EXPORT CJ-5,6,7,8	Fig. 9A-700
MANIFOLD, INTAKE AND EXHAUST 1981-85 ISUZU DIESEL, EXPORT CJ-5,6,7,8	Fig. 9A-800
OIL COOLER AND FILTER 1981-85 ISUZU DIESEL, EXPORT CJ-5,6,7,8	Fig. 9A-900
ENGINE MOUNTING 1981-85 ISUZU DIESEL, EXPORT CJ-5,6,7,8	Fig. 9A-1000
BLOCK, ENGINE 1986 RENAULT DIESEL, EXPORT CJ-7,8	Fig. 9A-1100
GASKET SET 1986 RENAULT DIESEL, EXPORT CJ-7,8	Fig. 9A-1200
CYLINDER HEAD 1986 RENAULT DIESEL, EXPORT CJ-7,8	Fig. 9A-1300
CRANKSHAFT, FLYWHEEL AND PISTON 1986 RENAULT DIESEL, EXPORT CJ-7,8	Fig. 9A-1400
CAMSHAFT AND VALVES 1986 RENAULT DIESEL, EXPORT CJ-7,8	Fig. 9A-1500
TIMING COVER AND INTERMEDIATE SHAFT 1986 RENAULT DIESEL, EXPORT CJ-7,8	Fig. 9A-1600
ENGINE OILING 1986 RENAULT DIESEL, EXPORT CJ-7,8	Fig. 9A-1700
MANIFOLD, INTAKE AND EXHAUST 1986 RENAULT DIESEL, EXPORT CJ-7,8	Fig. 9A-1800
ENGINE BREATHER SYSTEM 1986 RENAULT DIESEL, EXPORT CJ-7,8	Fig. 9A-1900
ENGINE MOUNTING 1986 RENAULT DIESEL, EXPORT CJ-7,8	Fig. 9A-2000
BLOCK, ENGINE 1981-83 GM FOUR CYLINDER CJ-5,6,7,8, SCRAMBLER	Fig. 9A-2100
GASKET SET 1981-83 GM FOUR CYLINDER CJ-5,6,7,8, SCRAMBLER	Fig. 9A-2200
CYLINDER HEAD 1981-83 GM FOUR CYLINDER CJ-5,6,7,8, SCRAMBLER	Fig. 9A-2300
CRANKSHAFT, FLYWHEEL AND PISTON 1981-83 GM FOUR CYLINDER CJ-5,6,7,8, SCRAMBLER	Fig. 9A-2400
CAMSHAFT AND VALVES 1981-83 GM FOUR CYLINDER CJ-5,6,7,8, SCRAMBLER	Fig. 9A-2500
ENGINE OILING 1981-83 GM FOUR CYLINDER CJ-5,6,7,8, SCRAMBLER	Fig. 9A-2600
MANIFOLD, INTAKE AND EXHAUST 1981-83 GM FOUR CYLINDER CJ-5,6,7,8, SCRAMBLER	Fig. 9A-2700
ENGINE MOUNTING 1981-83 GM FOUR CYLINDER CJ-5,6,7,8, SCRAMBLER	Fig. 9A-2800
BLOCK, ENGINE 1983-86 AMC FOUR CYLINDER CJ-7,8, SCRAMBLER	Fig. 9A-2900
GASKET SET 1983-86 AMC FOUR CYLINDER CJ-7,8, SCRAMBLER	Fig. 9A-3000
CYLINDER HEAD 1983-86 AMC FOUR CYLINDER CJ-7,8, SCRAMBLER	Fig. 9A-3100
CRANKSHAFT, FLYWHEEL AND PISTON 1983-86 AMC FOUR CYLINDER CJ-7,8, SCRAMBLER	Fig. 9A-3200
CAMSHAFT AND VALVES 1983-86 AMC FOUR CYLINDER CJ-7,8, SCRAMBLER	Fig. 9A-3300
TIMING COVER 1983-86 AMC FOUR CYLINDER CJ-7,8, SCRAMBLER	Fig. 9A-3400
ENGINE OILING 1983-86 AMC FOUR CYLINDER CJ-7,8, SCRAMBLER	Fig. 9A-3500
MANIFOLD, INTAKE AND EXHAUST 1983-86 AMC FOUR CYLINDER CJ-7,8, SCRAMBLER	Fig. 9A-3600

GROUP 9A - ENGINE, 4 CYLINDER

ILLUSTRATION TITLE	GROUP-FIG. NO.
CJ FOUR CYLINDER ENGINES (Continued)	
MANIFOLD, INTAKE AND EXHAUST 1983-86 AMC FOUR CYLINDER CJ-7,8, SCRAMBLER	Fig. 9A-3600
ENGINE MOUNTING 1983-86 AMC FOUR CYLINDER CJ-7,8, SCRAMBLER	Fig. 9A-3700
XJ FOUR CYLINDER ENGINES	
ENGINE, FOUR CYLINDER XJ CHEROKEE, WAGONEER COMANCHE	Fig. 9A-3800
BLOCK, ENGINE 1985-86 RENAULT DIESEL XJ CHEROKEE, XJ WAGONEER, COMANCHE	Fig. 9A-3900
GASKET SET 1985-86 RENAULT DIESEL XJ CHEROKEE, XJ WAGONEER, COMANCHE	Fig. 9A-4000
CYLINDER HEAD 1985-86 RENAULT DIESEL XJ CHEROKEE, XJ WAGONEER, COMANCHE	Fig. 9A-4100
CRANKSHAFT, FLYWHEEL, AND PISTON 1985-86 RENAULT DIESEL XJ CHEROKEE, XJ WAGONEER, COMANCHE	Fig. 9A-4200
CAMSHAFT AND VALVES, AND PISTON 1985-86 RENAULT DIESEL XJ CHEROKEE, XJ WAGONEER, COMANCHE	Fig. 9A-4300
TIMING COVER AND INTERMEDIATE SHAFT 1985-86 RENAULT DIESEL XJ CHEROKEE, XJ WAGONEER, COMANCHE	Fig. 9A-4400
ENGINE OILING 1985-86 RENAULT DIESEL XJ CHEROKEE, XJ WAGONEER, COMANCHE	Fig. 9A-4500
MANIFOLD, INTAKE AND EXHAUST 1985-86 RENAULT DIESEL XJ CHEROKEE, XJ WAGONEER, COMANCHE	Fig. 9A-4600
SEPARATOR, OIL 1985-86 RENAULT DIESEL XJ CHEROKEE, XJ WAGONEER, COMANCHE	Fig. 9A-4700
OIL COOLER AND FILTER 1985-86 RENAULT DIESEL XJ CHEROKEE, XJ WAGONEER, COMANCHE	Fig. 9A-4800
ENGINE MOUNTING 1985-86 RENAULT DIESEL XJ CHEROKEE, XJ WAGONEER, COMANCHE	Fig. 9A-4900
BLOCK, ENGINE 1984-86 FOUR CYLINDER GAS XJ CHEROKEE, XJ WAGONEER, COMANCHE	Fig. 9A-5000
GASKET SET 1984-86 FOUR CYLINDER GAS XJ CHEROKEE, XJ WAGONEER, COMANCHE	Fig. 9A-5100
CYLINDER HEAD 1984-86 FOUR CYLINDER GAS XJ CHEROKEE, XJ WAGONEER, COMANCHE	Fig. 9A-5200
CRANKSHAFT, FLYWHEEL AND PISTON 1984-86 FOUR CYLINDER GAS XJ CHEROKEE, XJ WAGONEER, COMANCHE	Fig. 9A-5300
CAMSHAFT AND VALVES 1984-86 FOUR CYLINDER GAS XJ CHEROKEE, XJ WAGONEER, COMANCHE	Fig. 9A-5400
TIMING COVER 1984-86 FOUR CYLINDER GAS XJ CHEROKEE, XJ WAGONEER, COMANCHE	Fig. 9A-5500
ENGINE OILING 1984-86 FOUR CYLINDER GAS XJ CHEROKEE, XJ WAGONEER, COMANCHE	Fig. 9A-5600
MANIFOLD, INTAKE AND EXHAUST, CARBURATED 1984-86 FOUR CYLINDER GAS XJ CHEROKEE, XJ WAGONEER, COMANCHE	Fig. 9A-5700
MANIFOLD, INTAKE AND EXHAUST, INJECTED 1984-86 FOUR CYLINDER GAS XJ CHEROKEE, XJ WAGONEER, COMANCHE	Fig. 9A-5800
ENGINE MOUNTING 1984-86 FOUR CYLINDER GAS XJ CHEROKEE, XJ WAGONEER, COMANCHE	Fig. 9A-5900

ENGINE, FOUR CYLINDER CJ-5,6,7,8, SCRAMBLER
Figure 9A-100

81J58 100

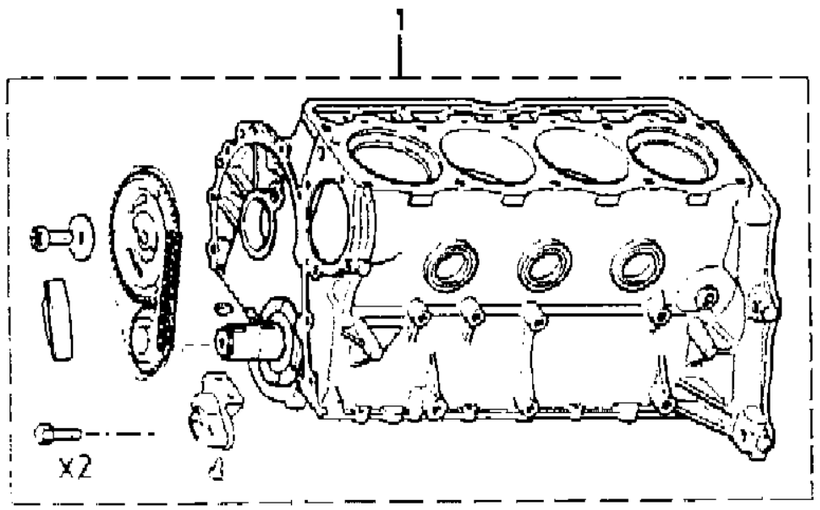

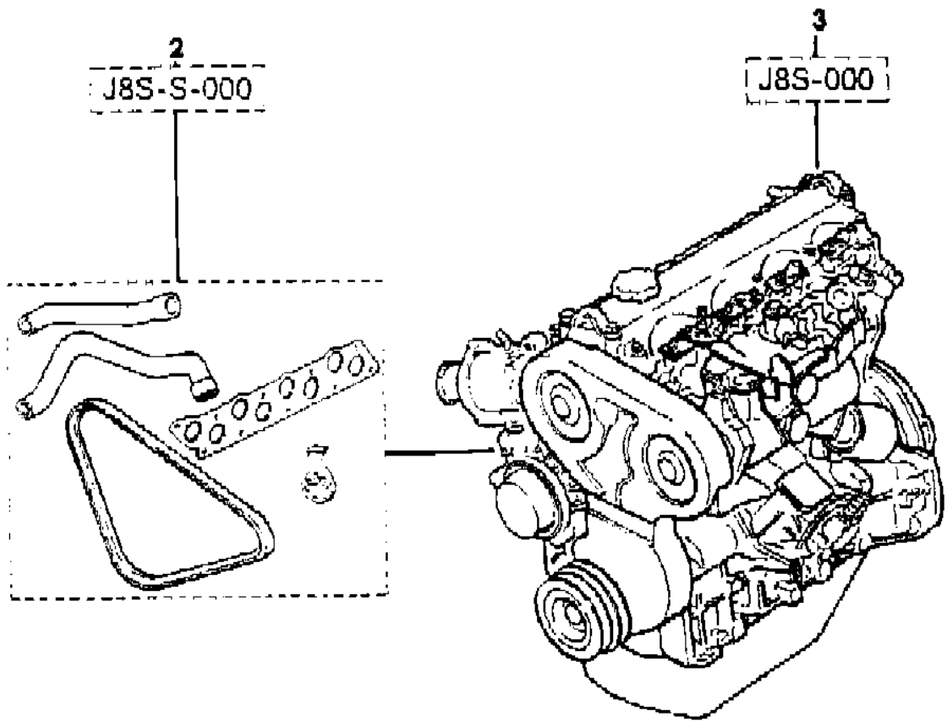

ITEM	PART NUMBER	QTY	BODY	MODEL	DESCRIPTION
1					ENGINE, Short
	J813 3750	1			1981: Four Cylinder Gas, GM Engine, Without Timing Chain, Gears, Camshaft
	J813 3990	1			1982-83: Four Cylinder Gas, GM Engine, Without Timing Chain, Gears, Camshaft
	8350 0245	1			1983-85: Four Cylinder Gas, AMC Engine, With Timi ng Chain, Gears; Without Camshaft
	8350 2499	1			1986: Four Cylinder Gas, AMC Engine, With Timing Chain, Gears; Without Camshaft
2	T149 8978	1			ENGINE, Complete, 1986 Renault Diesel, EXPORT
3	T146 2526	1			ENGINE, Complete, 1986 Renault Diesel, EXPORT

MODEL CODES

16=Cherokee 2 Dr.(1981-83)
17=Cherokee 2 Dr.(1981-83)
73=Cherokee 2WD-2 Dr.(1984-86)
74=Cherokee 2WD-4 Dr.(1984-86)
18=Cherokee 4 Dr.(1981-83)
77=Cherokee 4WD-2 Dr.(1984-86)
78=Cherokee 4WD-4 Dr.(1984-86)
85=CJ-5 (1981-83)
86=CJ-6(1981)
87=CJ-7(1981-86)
88=CJ-8, Scrambler(1981-86)
64=Comanche 2WD-6 Ft. Box(1986)
66=Comanche 2WD-7 Ft. Box(1986)
63=Comanche 4WD-6 Ft. Box(1986)
65=Comanche 4WD-7 Ft. Box(1986)
15=Grand Wagoneer 4 Dr.(1984-86)
25=J-10 Truck 7 Ft. Box(1981-84)
26=J10 Truck 8 Ft. Box(1981-86)
27=J-20 Truck 8 Ft. Box(1981-86)
15=Wagoneer 4 Dr.(1981-83)
75=Wagoneer 4WD-4 Dr.(1984-86)

BODY
CJ=CJ-5, CJ-6, CJ-7, CJ-8, Scrambler(1981-86)
MJ=Comanche Pickup(1986)

STYLES
SJ=Wagoneer(1981-83), Grand Wagoneer(1984-86), Cherokee(1981-83), J-10, J-20(1981-86)
XJ=Wagoneer(1984-86), Cherokee(1984-86)

AR = Use as Required - = Non Illustrated Part P.A.R. = Paint as Required

« RETURN TO GROUP INDEX

BLOCK, ENGINE 1981-85 ISUZU DIESEL, EXPORT CJ-5,6,7,8
Figure 9A-200

81J58 200

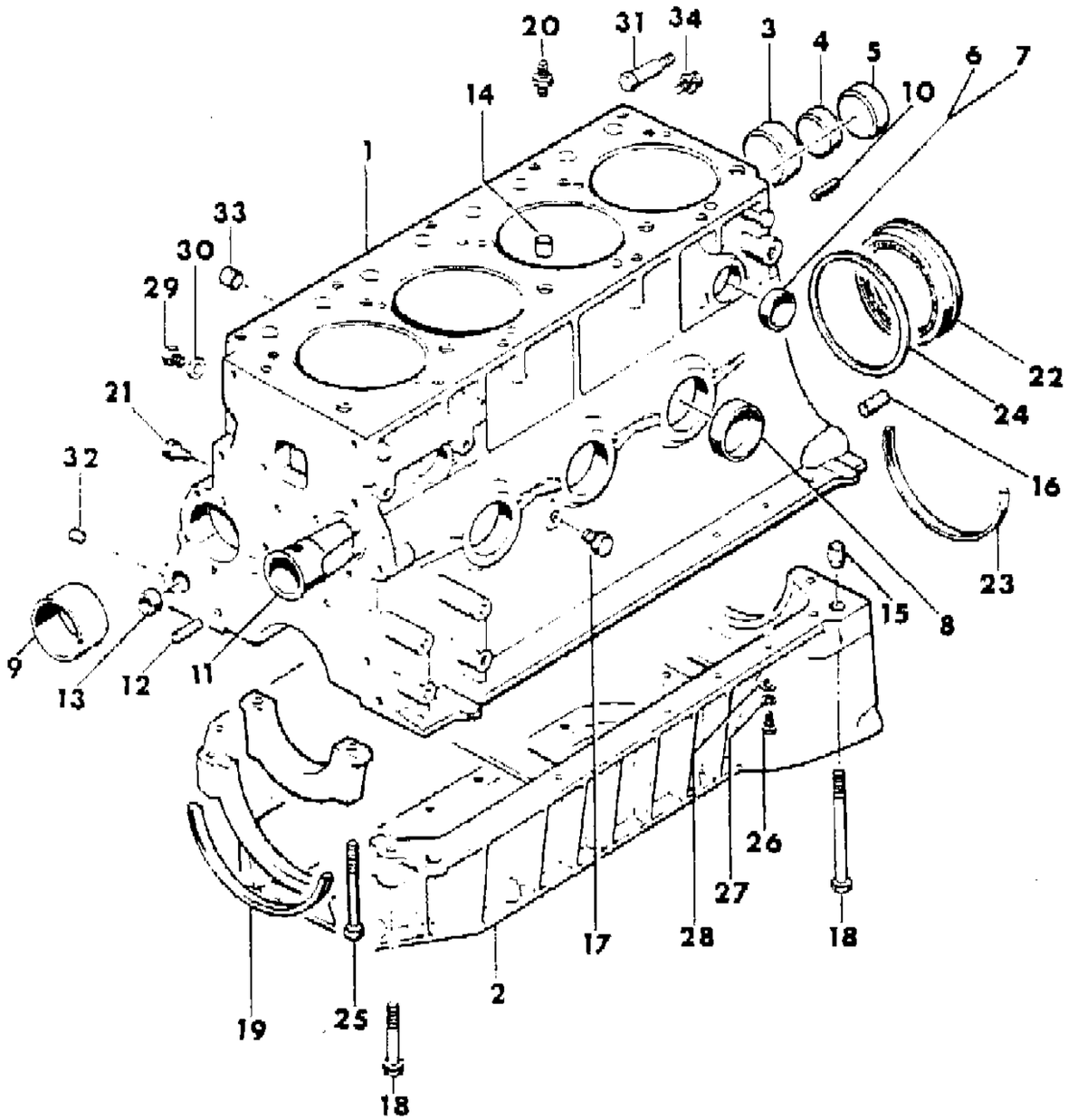

ITEM	PART NUMBER	QTY	BODY	MODEL	DESCRIPTION
1					BLOCK, Engine
	J806 0173	1			Up to Engine Serial #563644
	J806 0611	1			After Engine Serial #563644
2					BLOCK, Lower
	J806 0174	1			Up to Engine Serial #563644
	J806 0635	1			After Engine Serial #563644
3	J806 0080	1			PLUG
4	J806 0175	1			PLUG
5	J806 0177	1			PLUG, 38mm O.D.
6	J806 0176	2			PLUG, 32mm O.D.
7	J806 0164	1			PLUG, 12mm O.D.
8	J806 0162	3			PLUG, 45mm O.D.
9					BEARING PACKAGE
	J806 0199	1			Up to Engine Serial #563644
	J806 0612	1			After Engine Serial #563644
10	J806 0042	1			PIN
11	J806 0178	1			DUCT
12	J806 0041	2			PIN
13	J806 0081	2			PLUG
14	J806 0179	2			DOWEL
15	J806 0138	2			PIN
16	J806 0137	2			DOWEL
17	J806 0111	1			PLUG
18					BOLT
	J806 0125	1			M8-1.25x120mm
	J806 0049	2			M8-1.25x100mm
	J806 0029	2			M8-1.25x42mm
19	J806 0180	1			SEAL
20	J806 0139	1			FITTING
21	J806 0107	1			FITTING
22	J806 0158	1			SEAL
23	J806 0180	1			SEAL
24	J806 0227	1			SPACER
25	J806 0126	10			BOLT
26	J806 0012	14			BOLT
27	J806 0064	2			WASHER, Lock
28	J806 0069	2			WASHER, Plain
29	J806 0082	1			PLUG
30	J806 0094	1			SEAL

MODEL CODES
16=Cherokee 2 Dr.(1981-83)
17=Cherokee 2 Dr.(1981-83)
73=Cherokee 2WD-2 Dr.(1984-86)
74=Cherokee 2WD-4 Dr.(1984-86)
18=Cherokee 4 Dr.(1981-83)
77=Cherokee 4WD-2 Dr.(1984-86)
78=Cherokee 4WD-4 Dr.(1984-86)
85=CJ-5 (1981-83)
86=CJ-6(1981)
87=CJ-7(1981-86)
88=CJ-8, Scrambler(1981-86)
64=Comanche 2WD-6 Ft. Box(1986)
66=Comanche 2WD-7 Ft. Box(1986)
63=Comanche 4WD-6 Ft. Box(1986)
65=Comanche 4WD-7 Ft. Box(1986)
15=Grand Wagoneer 4 Dr.(1984-86)
25=J-10 Truck 7 Ft. Box(1981-84)
26=J10 Truck 8 Ft. Box(1981-86)
27=J-20 Truck 8 Ft. Box(1981-86)
15=Wagoneer 4 Dr.(1981-83)
75=Wagoneer 4WD-4 Dr.(1984-86)

BODY
CJ=CJ-5, CJ-6, CJ-7, CJ-8, Scrambler(1981-86)
MJ=Comanche Pickup(1986)

STYLES
SJ=Wagoneer(1981-83), Grand Wagoneer(1984-86), Cherokee(1981-83), J-10, J-20(1981-86)
XJ=Wagoneer(1984-86), Cherokee(1984-86)

AR = Use as Required - = Non Illustrated Part P.A.R. = Paint as Required

BLOCK, ENGINE 1981-85 ISUZU DIESEL, EXPORT CJ-5,6,7,8
Figure 9A-200

81J58 200

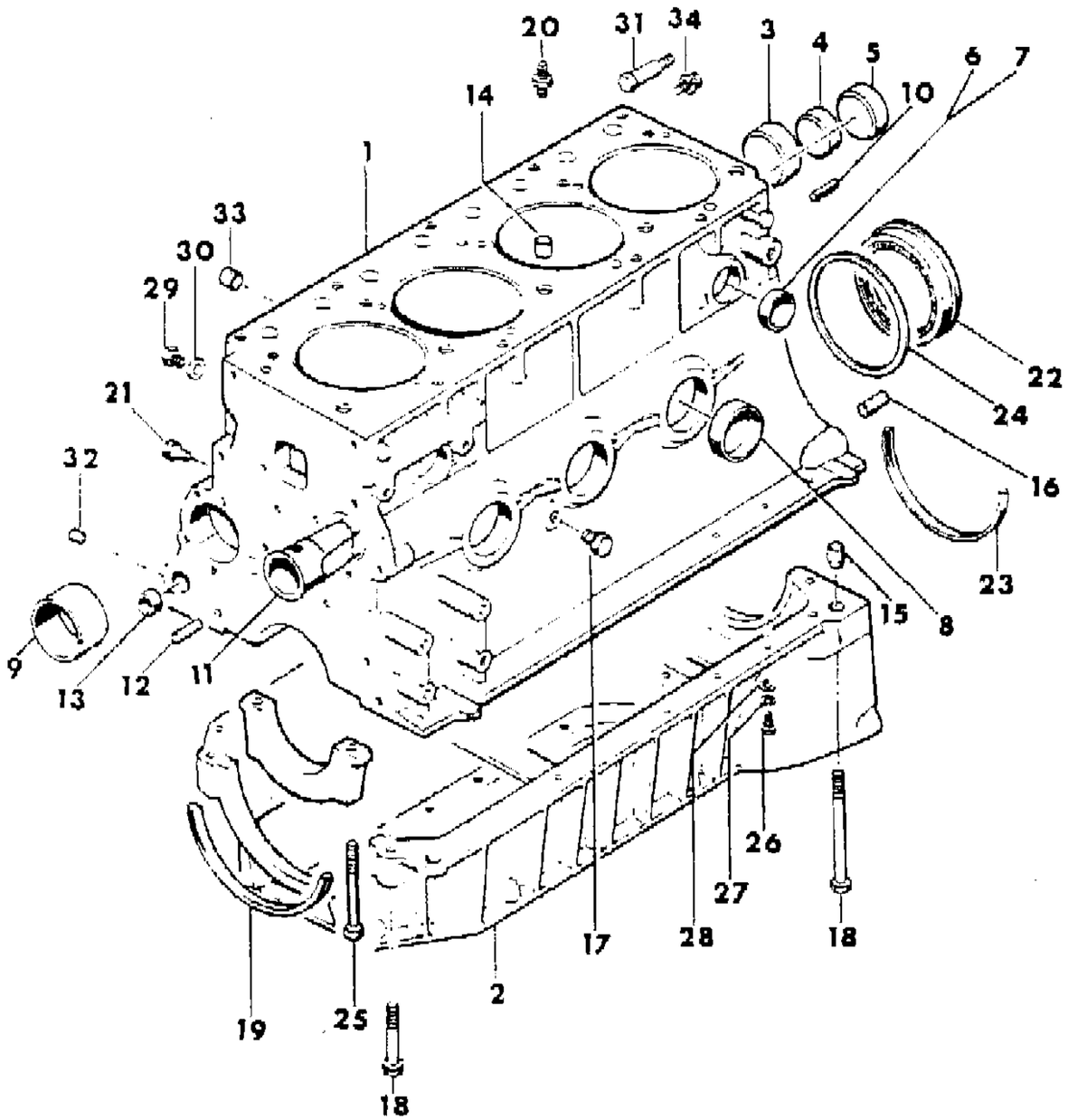

ITEM	PART NUMBER	QTY	BODY	MODEL	DESCRIPTION
31	J806 0057	1			BOLT
32	J806 0101	2			PLUG
33	J806 0112	2			PLUG
34	J806 0123	3			BOLT

MODEL CODES

16=Cherokee 2 Dr.(1981-83)
17=Cherokee 2 Dr.(1981-83)
73=Cherokee 2WD-2 Dr.(1984-86)
74=Cherokee 2WD-4 Dr.(1984-86)
18=Cherokee 4 Dr.(1981-83)
77=Cherokee 4WD-2 Dr.(1984-86)
78=Cherokee 4WD-4 Dr.(1984-86)
85=CJ-5 (1981-83)
86=CJ-6(1981)
87=CJ-7(1981-86)
88=CJ-8, Scrambler(1981-86)
64=Comanche 2WD-6 Ft. Box(1986)
66=Comanche 2WD-7 Ft. Box(1986)
63=Comanche 4WD-6 Ft. Box(1986)
65=Comanche 4WD-7 Ft. Box(1986)
15=Grand Wagoneer 4 Dr.(1984-86)
25=J-10 Truck 7 Ft. Box(1981-84)
26=J10 Truck 8 Ft. Box(1981-86)
27=J-20 Truck 8 Ft. Box(1981-86)
15=Wagoneer 4 Dr.(1981-83)
75=Wagoneer 4WD-4 Dr.(1984-86)

BODY
CJ=CJ-5, CJ-6, CJ-7, CJ-8, Scrambler(1981-86)
MJ=Comanche Pickup(1986)

STYLES
SJ=Wagoneer(1981-83), Grand Wagoneer(1984-86), Cherokee(1981-83), J-10, J-20(1981-86)
XJ=Wagoneer(1984-86), Cherokee(1984-86)

AR = Use as Required - = Non Illustrated Part P.A.R. = Paint as Required

« RETURN TO GROUP INDEX

GASKET SET 1981-85 ISUZU DIESEL, EXPORT CJ-5,6,7,8
Figure 9A-300

81J58 300

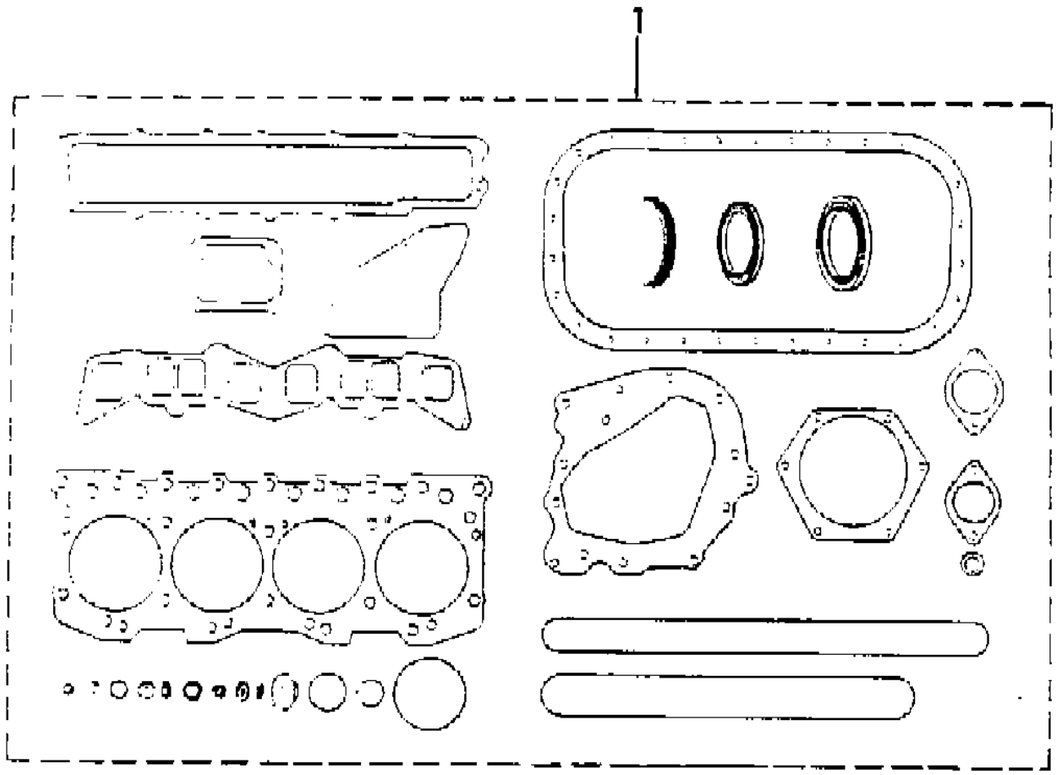

ITEM	PART NUMBER	QTY	BODY	MODEL	DESCRIPTION
1	J806 0593	1			GASKET PACKAGE, Engine Overhaul

MODEL CODES

16=Cherokee 2 Dr.(1981-83)
17=Cherokee 2 Dr.(1981-83)
73=Cherokee 2WD-2 Dr.(1984-86)
74=Cherokee 2WD-4 Dr.(1984-86)
18=Cherokee 4 Dr.(1981-83)
77=Cherokee 4WD-2 Dr.(1984-86)
78=Cherokee 4WD-4 Dr.(1984-86)
85=CJ-5 (1981-83)
86=CJ-6(1981)
87=CJ-7(1981-86)
88=CJ-8, Scrambler(1981-86)
64=Comanche 2WD-6 Ft. Box(1986)
66=Comanche 2WD-7 Ft. Box(1986)
63=Comanche 4WD-6 Ft. Box(1986)
65=Comanche 4WD-7 Ft. Box(1986)
15=Grand Wagoneer 4 Dr.(1984-86)
25=J-10 Truck 7 Ft. Box(1981-84)
26=J10 Truck 8 Ft. Box(1981-86)
27=J-20 Truck 8 Ft. Box(1981-86)
15=Wagoneer 4 Dr.(1981-83)
75=Wagoneer 4WD-4 Dr.(1984-86)

BODY

CJ=CJ-5, CJ-6, CJ-7, CJ-8, Scrambler(1981-86)
MJ=Comanche Pickup(1986)

STYLES

SJ=Wagoneer(1981-83), Grand Wagoneer(1984-86), Cherokee(1981-83), J-10, J-20(1981-86)
XJ=Wagoneer(1984-86), Cherokee(1984-86)

AR = Use as Required - = Non Illustrated Part P.A.R. = Paint as Required

« RETURN TO GROUP INDEX

CYLINDER HEAD 1981-85 ISUZU DIESEL, EXPORT CJ-5,6,7,8
Figure 9A-400

81J58 400

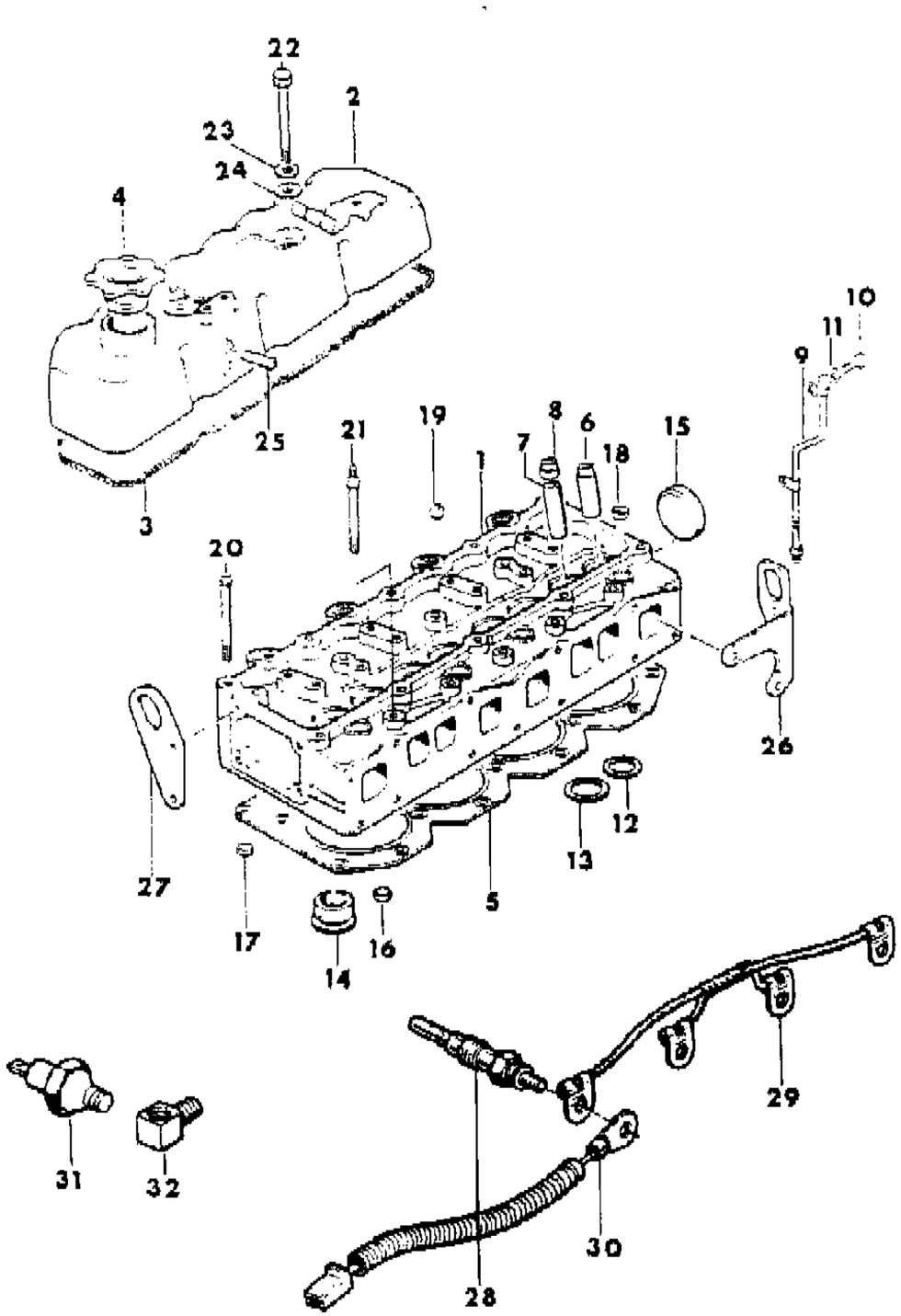

ITEM	PART NUMBER	QTY	BODY	MODEL	DESCRIPTION
1					HEAD, Engine Cylinder
	J806 0161	1			Up to Engine Serial #563644
	J806 0616	1			After Engine Serial #563644
2	J806 0168	1			COVER, Cylinder Head
3	J806 0169	1			GASKET, Cylinder Head Cover
4	J806 0205	1			CAP
5					GASKET
	J806 0165	1			Up to Engine Serial #563644
	J806 0631	1			After Engine Serial #563644
6					GUIDE
	J806 0203	4			Up to Engine Serial #563644
	J806 0617	4			After Engine Serial #563644
7					GUIDE
	J806 0204	4			Up to Engine Serial #563644
	J806 0617	4			After Engine Serial #563644
8					SEAL
	J806 0245	4			Up To Engine Serial #563644, (Intake Valve)
	J806 0620	8			After Engine Serial #563644, (Valve Stem)
9	J806 0276	1			TUBE
10	J806 0141	1			BOLT
11	J806 0155	2			GASKET
12					INSERT
	J806 0204	4			Up to Engine Serial #563644
	J806 0679	4			After Engine Serial #563644
13					INSERT
	J806 0202	4			Up tp Engine Serial #563644
	J806 0618	4			After Engine Serial #563644
14	J806 0167	8			CHAMBER, Precombustion ***
15	J806 0162	1			PLUG
16	J806 0589	4			PLUG
17	J806 0134	4			PLUG
18	J806 0163	5			PLUG
19	J806 0164	4			PLUG
20	J806 0613	18			BOLT
21					BOLT, Stud
	J806 0055	1			Up to Engine Serial #563644
	J806 0614	1			After Engine Serial #563644
22	J806 0630	2			BOLT
23	J806 0171	2			WASHER

MODEL CODES

16=Cherokee 2 Dr.(1981-83)
17=Cherokee 2 Dr.(1981-83)
73=Cherokee 2WD-2 Dr.(1984-86)
74=Cherokee 2WD-4 Dr.(1984-86)
18=Cherokee 4 Dr.(1981-83)
77=Cherokee 4WD-2 Dr.(1984-86)
78=Cherokee 4WD-4 Dr.(1984-86)
85=CJ-5 (1981-83)
86=CJ-6(1981)
87=CJ-7(1981-86)
88=CJ-8, Scrambler(1981-86)
64=Comanche 2WD-6 Ft. Box(1986)
66=Comanche 2WD-7 Ft. Box(1986)
63=Comanche 4WD-6 Ft. Box(1986)
65=Comanche 4WD-7 Ft. Box(1986)
15=Grand Wagoneer 4 Dr.(1984-86)
25=J-10 Truck 7 Ft. Box(1981-84)
26=J10 Truck 8 Ft. Box(1981-86)
27=J-20 Truck 8 Ft. Box(1981-86)
15=Wagoneer 4 Dr.(1981-83)
75=Wagoneer 4WD-4 Dr.(1984-86)

BODY
CJ=CJ-5, CJ-6, CJ-7, CJ-8, Scrambler(1981-86)
MJ=Comanche Pickup(1986)

STYLES
SJ=Wagoneer(1981-83), Grand Wagoneer(1984-86), Cherokee(1981-83), J-10, J-20(1981-86)
XJ=Wagoneer(1984-86), Cherokee(1984-86)

AR = Use as Required - = Non Illustrated Part P.A.R. = Paint as Required

« RETURN TO GROUP INDEX »

CYLINDER HEAD 1981-85 ISUZU DIESEL, EXPORT CJ-5,6,7,8
Figure 9A-400

81J58 400

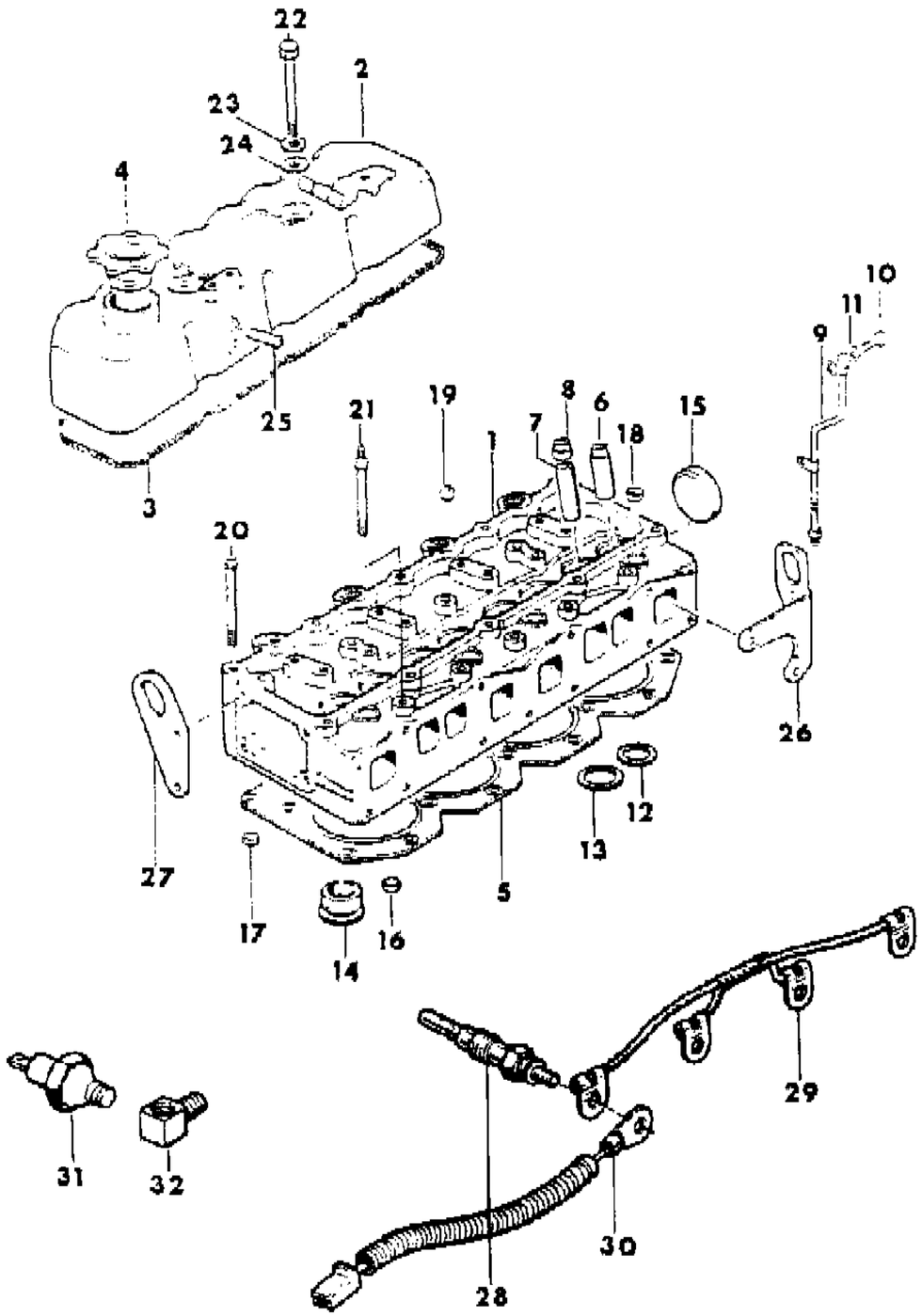

ITEM	PART NUMBER	QTY	BODY	MODEL	DESCRIPTION
24	J806 0172	2			SEAL
25	J806 0170	1			FITTING
26	J806 0210	1			BRACKET
27	J806 0209	1			BRACKET
28	J806 0564	4			GLOWPLUG ***
29	J806 0416	1			BAR
30	5603 2504	2			HARNESS, Glowplug
31	J314 2856	1			SWITCH
32	J400 6600	1			FITTING

MODEL CODES

16=Cherokee 2 Dr.(1981-83)
17=Cherokee 2 Dr.(1981-83)
73=Cherokee 2WD-2 Dr.(1984-86)
74=Cherokee 2WD-4 Dr.(1984-86)
18=Cherokee 4 Dr.(1981-83)
77=Cherokee 4WD-2 Dr.(1984-86)
78=Cherokee 4WD-4 Dr.(1984-86)
85=CJ-5 (1981-83)
86=CJ-6(1981)
87=CJ-7(1981-86)
88=CJ-8, Scrambler(1981-86)
64=Comanche 2WD-6 Ft. Box(1986)
66=Comanche 2WD-7 Ft. Box(1986)
63=Comanche 4WD-6 Ft. Box(1986)
65=Comanche 4WD-7 Ft. Box(1986)
15=Grand Wagoneer 4 Dr.(1984-86)
25=J-10 Truck 7 Ft. Box(1981-84)
26=J10 Truck 8 Ft. Box(1981-86)
27=J-20 Truck 8 Ft. Box(1981-86)
15=Wagoneer 4 Dr.(1981-83)
75=Wagoneer 4WD-4 Dr.(1984-86)

BODY
CJ=CJ-5, CJ-6, CJ-7, CJ-8, Scrambler(1981-86)
MJ=Comanche Pickup(1986)

STYLES
SJ=Wagoneer(1981-83), Grand Wagoneer(1984-86), Cherokee(1981-83), J-10, J-20(1981-86)
XJ=Wagoneer(1984-86), Cherokee(1984-86)

AR = Use as Required - = Non Illustrated Part P.A.R. = Paint as Required

« RETURN TO GROUP INDEX

CRANKSHAFT, FLYWHEEL AND PISTON 1981-85 ISUZU DIESEL, EXPORT CJ-5,6,7,8
Figure 9A-500

81J58 500

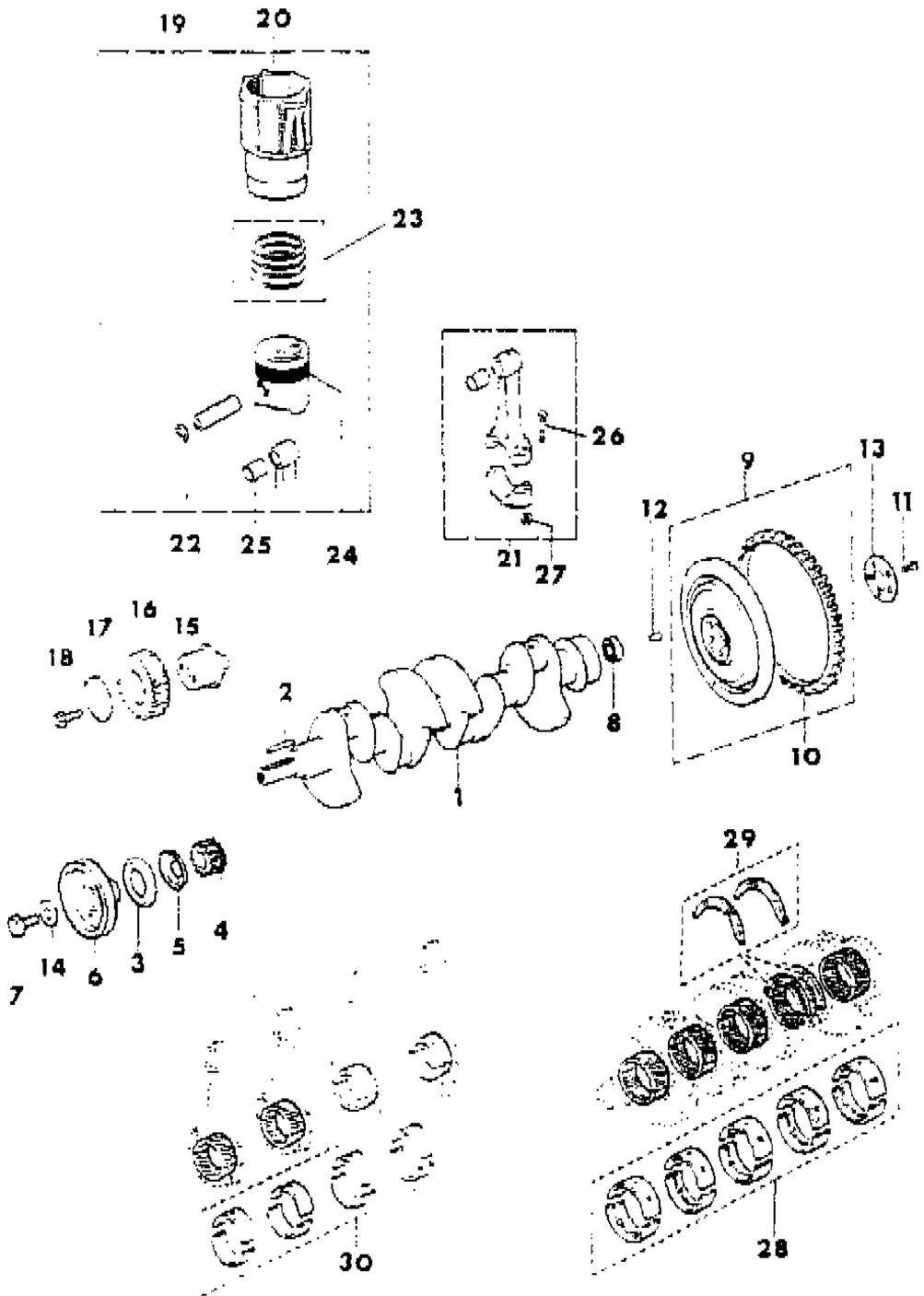

ITEM	PART NUMBER	QTY	BODY	MODEL	DESCRIPTION
1	J806 0222	1			CRANKSHAFT
2	J806 0040	1			KEY
3	J806 0590	1			SEAL
4	J806 0232	1			SPROCKET, Crankshaft
5	J806 0226	1			SLINGER, Oil ***
6	J806 0228	1			PULLEY
7	J806 0127	1			BOLT
8	J806 0124	1			BEARING, Pilot
9	J806 0223	1			FLYWHEEL
10	J806 0224	1			GEAR, Ring
11	J806 0053	6			BOLT
12	J806 0043	1			PIN
13	J806 0225	1			WASHER
14	J806 0229	1			WASHER
15	J806 0236	1			SHAFT
16	J806 0234	1			GEAR
17	J806 0237	1			COLLAR
18	J806 0047	1			BOLT
19	J806 0571	1			PISTON PACKAGE, (Includes Sleeve) ***
20	J806 0181	1			SLEEVE
21					ROD, Connecting
	J806 0214	4			Up to Engine Serial #563644
	8350 1880	4			After Engine Serial #563644
22	J806 0099	8			RETAINER, Piston Pin
23	J806 0212	1			RING PACKAGE, Piston
24					PISTON
	J806 0211	4			Up to Engine Serial #563644
	J806 0615	4			After Engine Serial #563644
25					BUSHING
	J806 0216	4			Up to Engine Serial #563644
	8350 1883	4			After Engine Serial #563644
26					BOLT
	J806 0215	8			Up to Engine Serial #563644
	8350 1881	8			After Engine Serial #563644
27	8350 1882	8			NUT, After Engine Serial #563644
28					BEARING PACKAGE
	J806 0195	1			Standard
	J806 0196	1			-.50mm
	J806 0197	1			-1.00mm

MODEL CODES

16=Cherokee 2 Dr.(1981-83)
17=Cherokee 2 Dr.(1981-83)
73=Cherokee 2WD-2 Dr.(1984-86)
74=Cherokee 2WD-4 Dr.(1984-86)
18=Cherokee 4 Dr.(1981-83)
77=Cherokee 4WD-2 Dr.(1984-86)
78=Cherokee 4WD-4 Dr.(1984-86)
85=CJ-5 (1981-83)
86=CJ-6(1981)
87=CJ-7(1981-86)
88=CJ-8, Scrambler(1981-86)
64=Comanche 2WD-6 Ft. Box(1986)
66=Comanche 2WD-7 Ft. Box(1986)
63=Comanche 4WD-6 Ft. Box(1986)
65=Comanche 4WD-7 Ft. Box(1986)
15=Grand Wagoneer 4 Dr.(1984-86)
25=J-10 Truck 7 Ft. Box(1981-84)
26=J10 Truck 8 Ft. Box(1981-86)
27=J-20 Truck 8 Ft. Box(1981-86)
15=Wagoneer 4 Dr.(1981-83)
75=Wagoneer 4WD-4 Dr.(1984-86)

BODY
CJ=CJ-5, CJ-6, CJ-7, CJ-8, Scrambler(1981-86)
MJ=Comanche Pickup(1986)

STYLES
SJ=Wagoneer(1981-83), Grand Wagoneer(1984-86), Cherokee(1981-83), J-10, J-20(1981-86)
XJ=Wagoneer(1984-86), Cherokee(1984-86)

AR = Use as Required - = Non Illustrated Part P.A.R. = Paint as Required

« RETURN TO GROUP INDEX »

CRANKSHAFT, FLYWHEEL AND PISTON 1981-85 ISUZU DIESEL, EXPORT CJ-5,6,7,8
Figure 9A-500

81J58 500

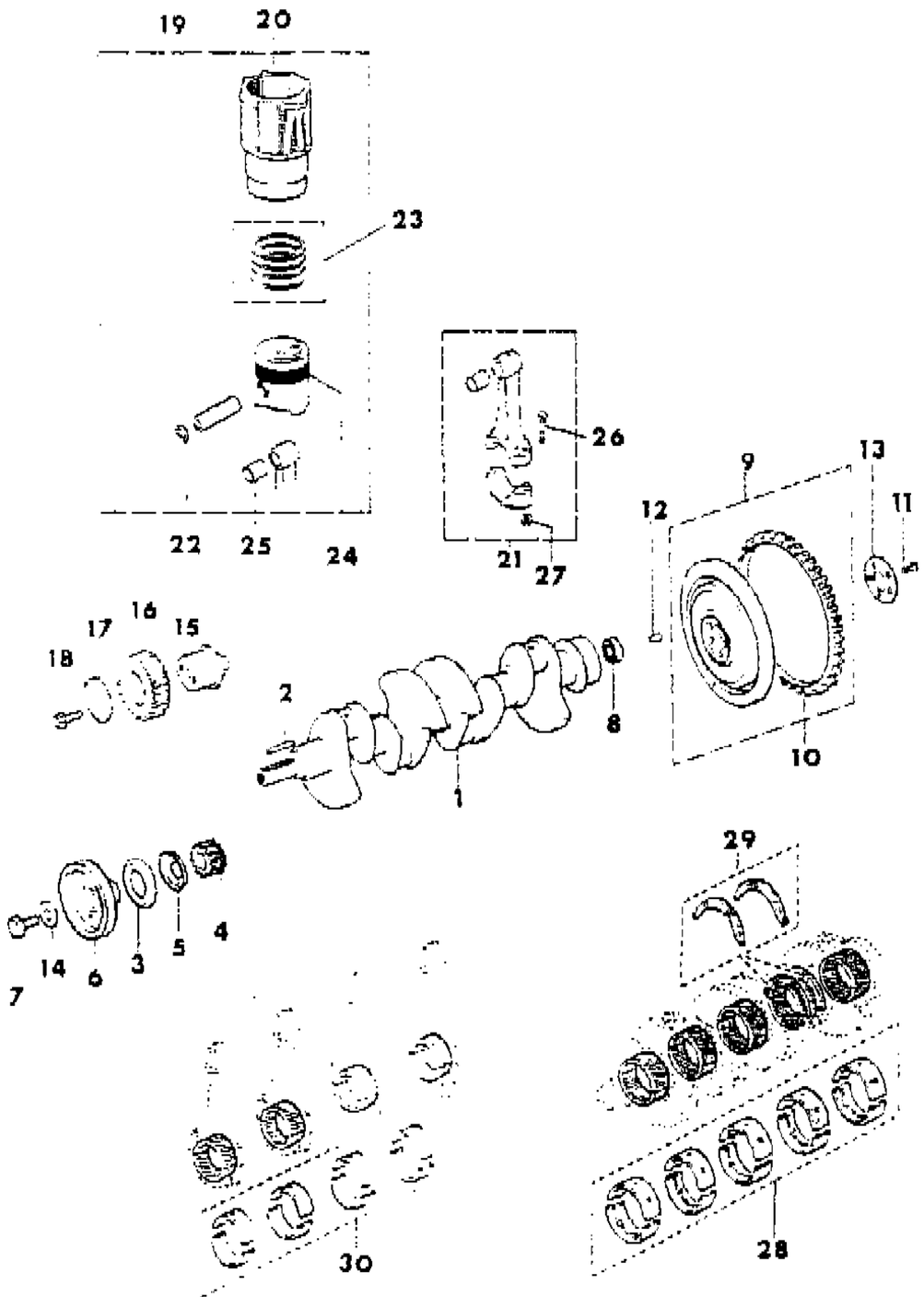

ITEM	PART NUMBER	QTY	BODY	MODEL	DESCRIPTION
29	J806 0198	1			BEARING PACKAGE
30					BEARING PACKAGE
	J806 0217	4			Standard
	J806 0218	4			-.25mm
	J806 0219	4			-.50mm
	J806 0220	4			-.75mm
	J806 0221	4			-1.00mm

MODEL CODES

16=Cherokee 2 Dr.(1981-83)
17=Cherokee 2 Dr.(1981-83)
73=Cherokee 2WD-2 Dr.(1984-86)
74=Cherokee 2WD-4 Dr.(1984-86)
18=Cherokee 4 Dr.(1981-83)
77=Cherokee 4WD-2 Dr.(1984-86)
78=Cherokee 4WD-4 Dr.(1984-86)
85=CJ-5 (1981-83)
86=CJ-6(1981)
87=CJ-7(1981-86)
88=CJ-8, Scrambler(1981-86)
64=Comanche 2WD-6 Ft. Box(1986)
66=Comanche 2WD-7 Ft. Box(1986)
63=Comanche 4WD-6 Ft. Box(1986)
65=Comanche 4WD-7 Ft. Box(1986)
15=Grand Wagoneer 4 Dr.(1984-86)
25=J-10 Truck 7 Ft. Box(1981-84)
26=J10 Truck 8 Ft. Box(1981-86)
27=J-20 Truck 8 Ft. Box(1981-86)
15=Wagoneer 4 Dr.(1981-83)
75=Wagoneer 4WD-4 Dr.(1984-86)

BODY
CJ=CJ-5, CJ-6, CJ-7, CJ-8, Scrambler(1981-86)
MJ=Comanche Pickup(1986)

STYLES
SJ=Wagoneer(1981-83), Grand Wagoneer(1984-86), Cherokee(1981-83), J-10, J-20(1981-86)
XJ=Wagoneer(1984-86), Cherokee(1984-86)

AR = Use as Required - = Non Illustrated Part P.A.R. = Paint as Required

« RETURN TO GROUP INDEX

CAMSHAFT AND VALVES 1981-85 ISUZU DIESEL, EXPORT CJ-5,6,7,8
Figure 9A-600

81J58 600

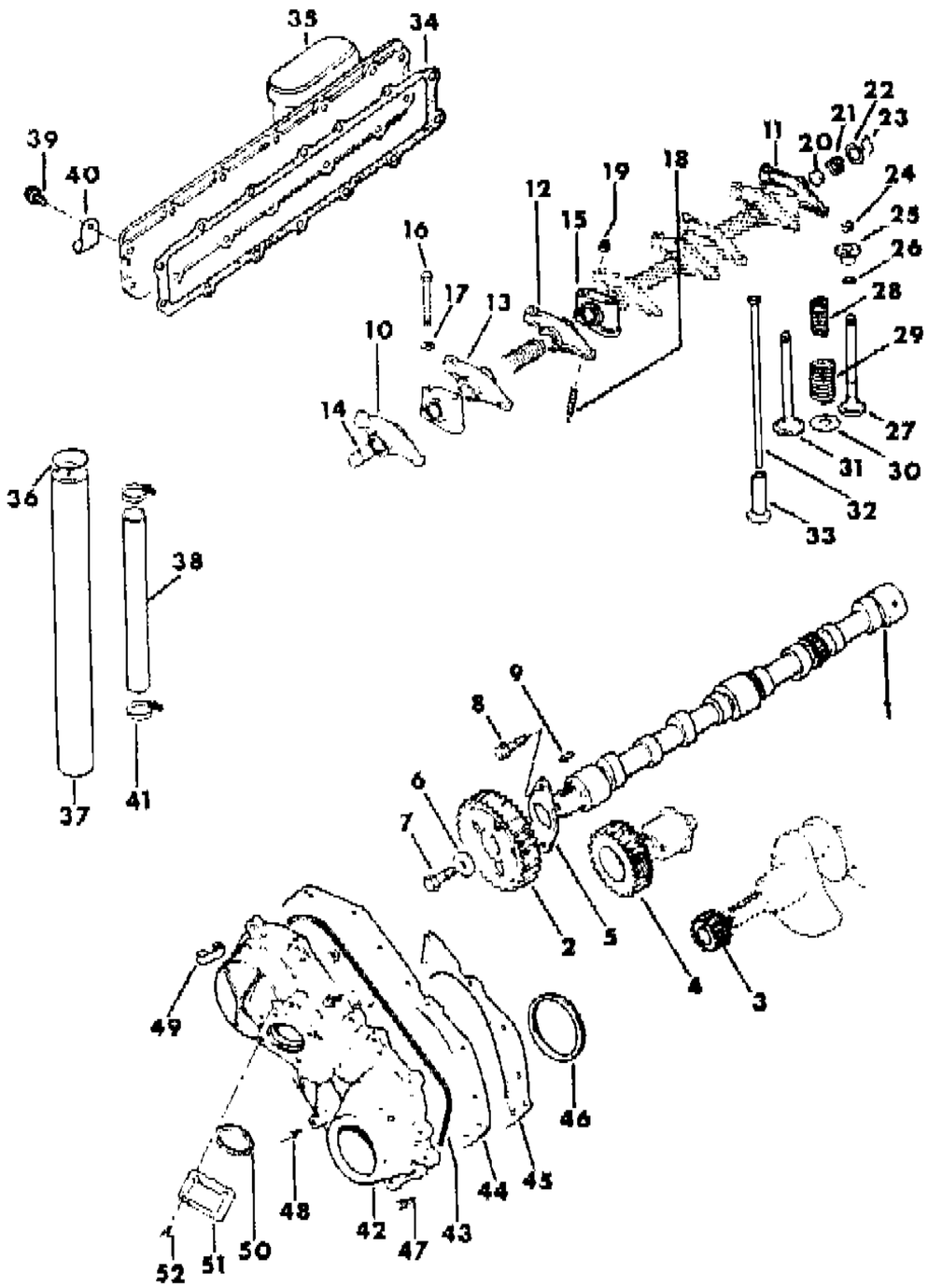

ITEM	PART NUMBER	QTY	BODY	MODEL	DESCRIPTION
1	J806 0230	1			CAMSHAFT
2	J806 0233	1			SPROCKET
3	J806 0232	1			SPROCKET, Camshaft
4	J806 0234	1			SPROCKET, Intermediate Shaft
5	J806 0200	1			BEARING, Thrust
6	J806 0231	1			WASHER
7	J806 0045	1			BOLT
8	J806 0018	2			BOLT
9	J806 0039	1			KEY
10					ARM, Valve Rocker
	J806 0248	1			Up to Engine Serial #564644
	J806 0608	1			After Engine Serial #564644
11					ARM, Valve Rocker
	J806 0249	1			Up to Engine Serial #563644
	J806 0609	1			After Engine Serial #563644
12	J806 0250	1			ARM, Valve Rocker
13	J806 0251	3			ARM, Valve Rocker
14					SHAFT, Rocker Arm
	J806 0253	1			Up to Engine Serial #563644
	J806 0610	1			After Engine Serial #563644
15	J806 0255	4			BRACE
16	J806 0003	8			BOLT
17	J806 0073	8			WASHER
18	J806 0252	8			SCREW
19	J806 0061	8			NUT
20	J806 0254	2			PLUG
21	J806 0159	2			SPRING
22	J806 0133	1			WASHER
23	J806 0079	2			RING, Snap
24	J806 0244	16			KEEPER ***
25	J806 0243	8			RETAINER
26	J806 0240	8			SEAL
27					VALVE, Exhaust
	J806 0239	4			Up to Engine Serial #563644
	J806 0622	4			After Engine Serial #563644
28	J806 0242	8			SPRING, Inner
29	J806 0241	8			SPRING, Outer
30	J806 0132	8			SEAT, Valve Spring
31					VALVE, Intake

MODEL CODES

16=Cherokee 2 Dr.(1981-83)
17=Cherokee 2 Dr.(1981-83)
73=Cherokee 2WD-2 Dr.(1984-86)
74=Cherokee 2WD-4 Dr.(1984-86)
18=Cherokee 4 Dr.(1981-83)
77=Cherokee 4WD-2 Dr.(1984-86)
78=Cherokee 4WD-4 Dr.(1984-86)
85=CJ-5 (1981-83)
86=CJ-6(1981)
87=CJ-7(1981-86)
88=CJ-8, Scrambler(1981-86)
64=Comanche 2WD-6 Ft. Box(1986)
66=Comanche 2WD-7 Ft. Box(1986)
63=Comanche 4WD-6 Ft. Box(1986)
65=Comanche 4WD-7 Ft. Box(1986)
15=Grand Wagoneer 4 Dr.(1984-86)
25=J-10 Truck 7 Ft. Box(1981-84)
26=J10 Truck 8 Ft. Box(1981-86)
27=J-20 Truck 8 Ft. Box(1981-86)
15=Wagoneer 4 Dr.(1981-83)
75=Wagoneer 4WD-4 Dr.(1984-86)

BODY
CJ=CJ-5, CJ-6, CJ-7, CJ-8, Scrambler(1981-86)
MJ=Comanche Pickup(1986)

STYLES
SJ=Wagoneer(1981-83), Grand Wagoneer(1984-86), Cherokee(1981-83), J-10, J-20(1981-86)
XJ=Wagoneer(1984-86), Cherokee(1984-86)

AR = Use as Required - = Non Illustrated Part P.A.R. = Paint as Required

CAMSHAFT AND VALVES 1981-85 ISUZU DIESEL, EXPORT CJ-5,6,7,8
Figure 9A-600

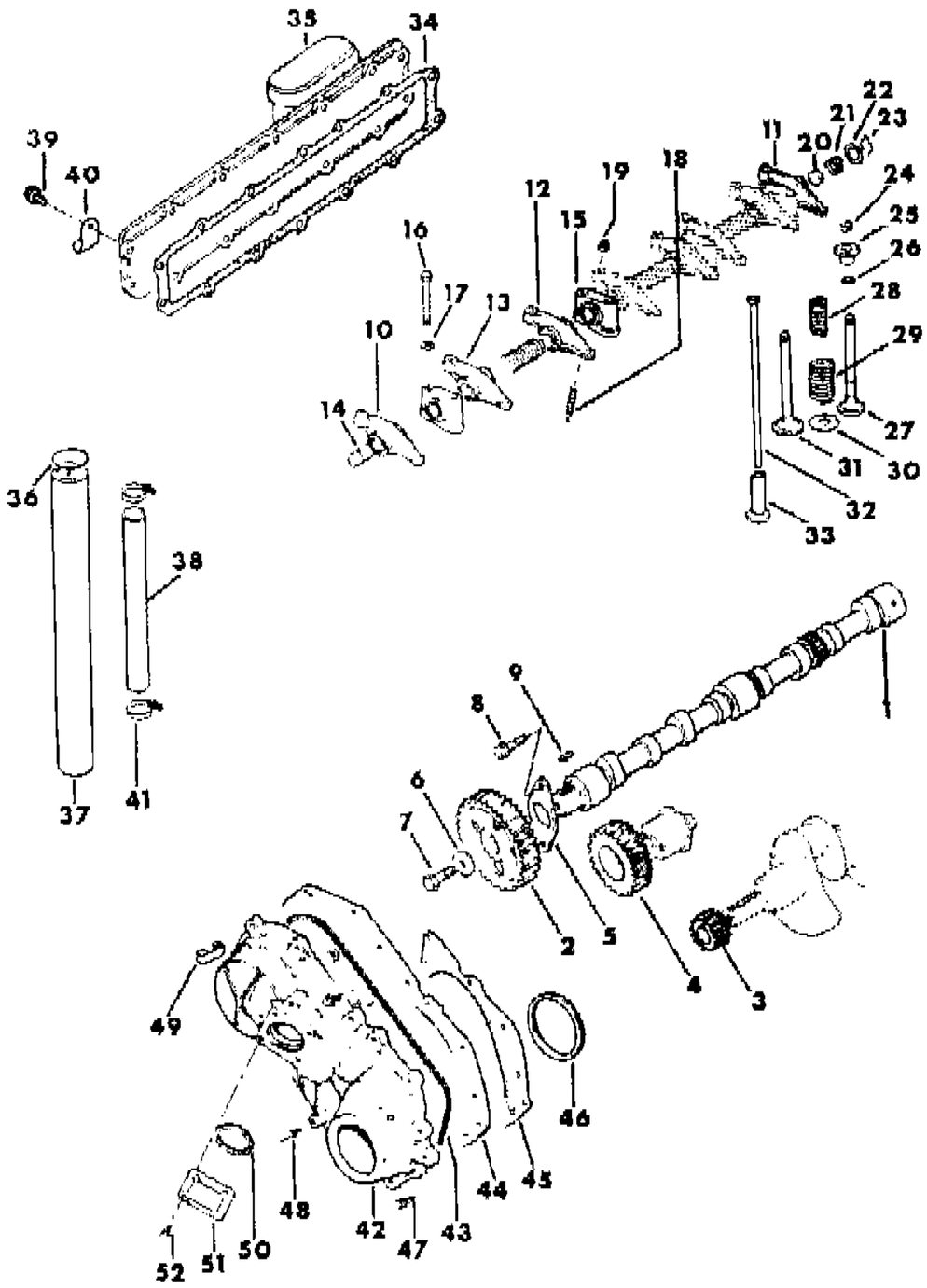

ITEM	PART NUMBER	QTY	BODY	MODEL	DESCRIPTION
	J806 0238	4			Up to Engine Serial #563644
	J806 0621	4			After Engine Serial #563644
32					PUSHROD ***
	J806 0247	1			Up to Engine Serial #563644
	J806 0632	4			After Engine Serial #563644
33	J806 0296	8			TAPPET
34					GASKET
	J806 0103	1			Up to Engine Serial #563644
	J806 0636	1			After Engine Serial #563644
35	J806 0182	1			COVER
36	J806 0122	1			CLAMP
37	J806 0084	1			HOSE
38	J806 0085	1			HOSE
39	J806 0010	14			BOLT
40	J806 0116	1			CLIP
41	J806 0147	1			CLAMP
42	J806 0184	1			COVER
43	J806 0187	1			GASKET
44	J806 0185	1			PLATE
45	J806 0186	1			GASKET
46	J806 0157	1			SEAL
47	J806 0020	9			BOLT
48	J806 0191	1			POINTER ***
49	J806 0114	1			CLIP
50	J806 0153	1			SEAL
51	J806 0190	1			COVER
52	J806 0023	4			BOLT

MODEL CODES

16=Cherokee 2 Dr.(1981-83)
17=Cherokee 2 Dr.(1981-83)
73=Cherokee 2WD-2 Dr.(1984-86)
74=Cherokee 2WD-4 Dr.(1984-86)
18=Cherokee 4 Dr.(1981-83)
77=Cherokee 4WD-2 Dr.(1984-86)
78=Cherokee 4WD-4 Dr.(1984-86)
85=CJ-5 (1981-83)
86=CJ-6(1981)
87=CJ-7(1981-86)
88=CJ-8, Scrambler(1981-86)
64=Comanche 2WD-6 Ft. Box(1986)
66=Comanche 2WD-7 Ft. Box(1986)
63=Comanche 4WD-6 Ft. Box(1986)
65=Comanche 4WD-7 Ft. Box(1986)
15=Grand Wagoneer 4 Dr.(1984-86)
25=J-10 Truck 7 Ft. Box(1981-84)
26=J10 Truck 8 Ft. Box(1981-86)
27=J-20 Truck 8 Ft. Box(1981-86)
15=Wagoneer 4 Dr.(1981-83)
75=Wagoneer 4WD-4 Dr.(1984-86)

BODY
CJ=CJ-5, CJ-6, CJ-7, CJ-8, Scrambler(1981-86)
MJ=Comanche Pickup(1986)

STYLES
SJ=Wagoneer(1981-83), Grand Wagoneer(1984-86), Cherokee(1981-83), J-10, J-20(1981-86)
XJ=Wagoneer(1984-86), Cherokee(1984-86)

AR = Use as Required - = Non Illustrated Part P.A.R. = Paint as Required

« RETURN TO GROUP INDEX

ENGINE OILING 1981-85 ISUZU DIESEL, EXPORT CJ-5,6,7,8
Figure 9A-700

81J58 700

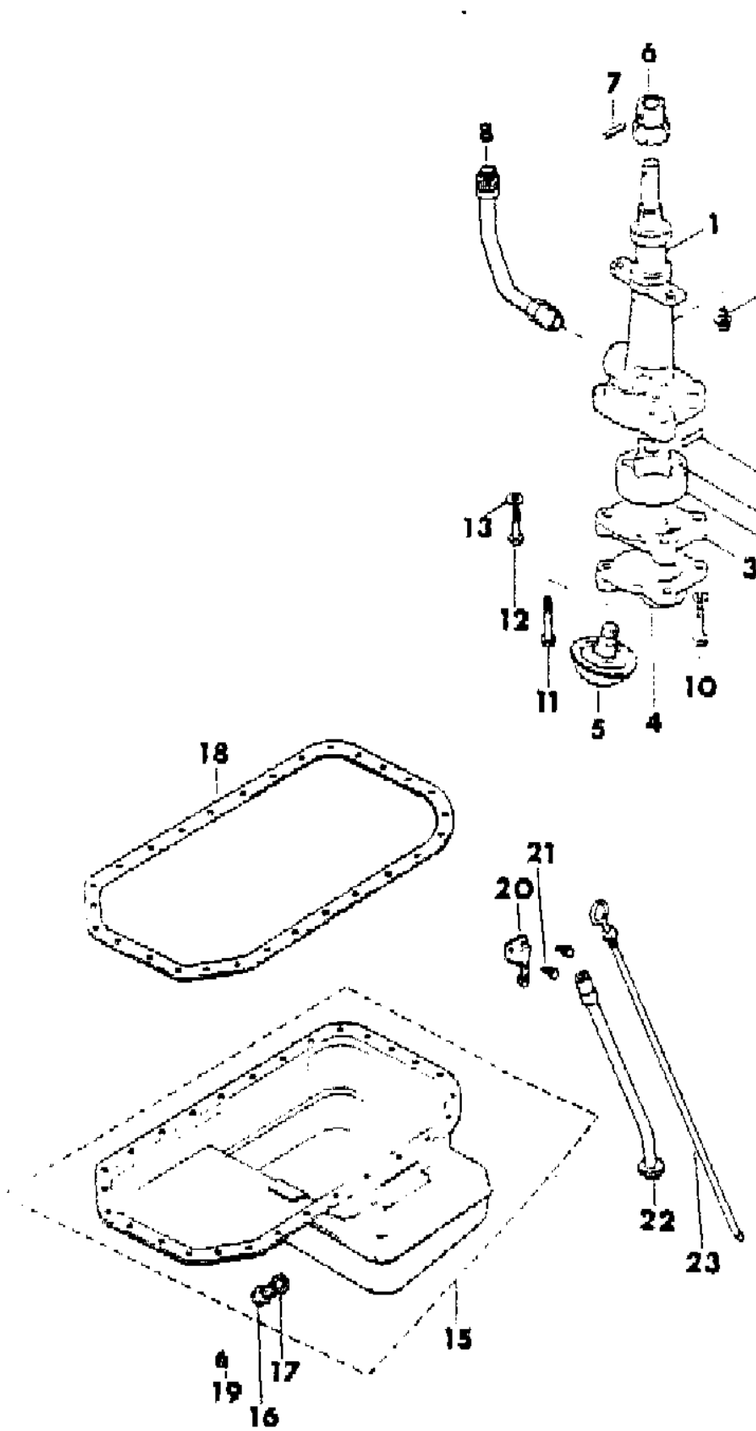

ITEM	PART NUMBER	QTY	BODY	MODEL	DESCRIPTION
1	J806 0256	1			PUMP, Engine Oil
2	J806 0259	1			GEAR ASSEMBLY ***
3	J806 0258	1			SPACER
4	J806 0257	1			COVER, Oil Pump
5	J806 0262	1			STRAINER
6	J806 0260	1			GEAR, Oil Pump Drive
7	J806 0136	1			PIN
8	J806 0277	1			TUBE
9	J806 0027	2			BOLT
10	J806 0004	2			BOLT
11	J806 0005	2			BOLT
12	J806 0032	1			BOLT
13	J806 0064	4			WASHER, Lock
14	J806 0261	1			PIN
15	J806 0193	1			PAN, Engine Oil
16	J806 0110	1			PLUG
17	J806 0154	1			GASKET
18	J806 0194	1			GASKET, Pan
19	J806 0015	30			BOLT
20	J806 0207	1			BRACKET
21	J806 0026	3			BOLT
22	J806 0208	1			TUBE, Engine Oil Indicator
23	J806 0206	1			INDICATOR, Engine Oil Level

MODEL CODES

16=Cherokee 2 Dr.(1981-83)
17=Cherokee 2 Dr.(1981-83)
73=Cherokee 2WD-2 Dr.(1984-86)
74=Cherokee 2WD-4 Dr.(1984-86)
18=Cherokee 4 Dr.(1981-83)
77=Cherokee 4WD-2 Dr.(1984-86)
78=Cherokee 4WD-4 Dr.(1984-86)
85=CJ-5 (1981-83)
86=CJ-6(1981)
87=CJ-7(1981-86)
88=CJ-8, Scrambler(1981-86)
64=Comanche 2WD-6 Ft. Box(1986)
66=Comanche 2WD-7 Ft. Box(1986)
63=Comanche 4WD-6 Ft. Box(1986)
65=Comanche 4WD-7 Ft. Box(1986)
15=Grand Wagoneer 4 Dr.(1984-86)
25=J-10 Truck 7 Ft. Box(1981-84)
26=J10 Truck 8 Ft. Box(1981-86)
27=J-20 Truck 8 Ft. Box(1981-86)
15=Wagoneer 4 Dr.(1981-83)
75=Wagoneer 4WD-4 Dr.(1984-86)

BODY
CJ=CJ-5, CJ-6, CJ-7, CJ-8, Scrambler(1981-86)
MJ=Comanche Pickup(1986)

STYLES
SJ=Wagoneer(1981-83), Grand Wagoneer(1984-86), Cherokee(1981-83), J-10, J-20(1981-86)
XJ=Wagoneer(1984-86), Cherokee(1984-86)

AR = Use as Required - = Non Illustrated Part P.A.R. = Paint as Required

« RETURN TO GROUP INDEX

MANIFOLD, INTAKE AND EXHAUST 1981-85 ISUZU DIESEL, EXPORT CJ-5,6,7,8
Figure 9A-800

81J58 800

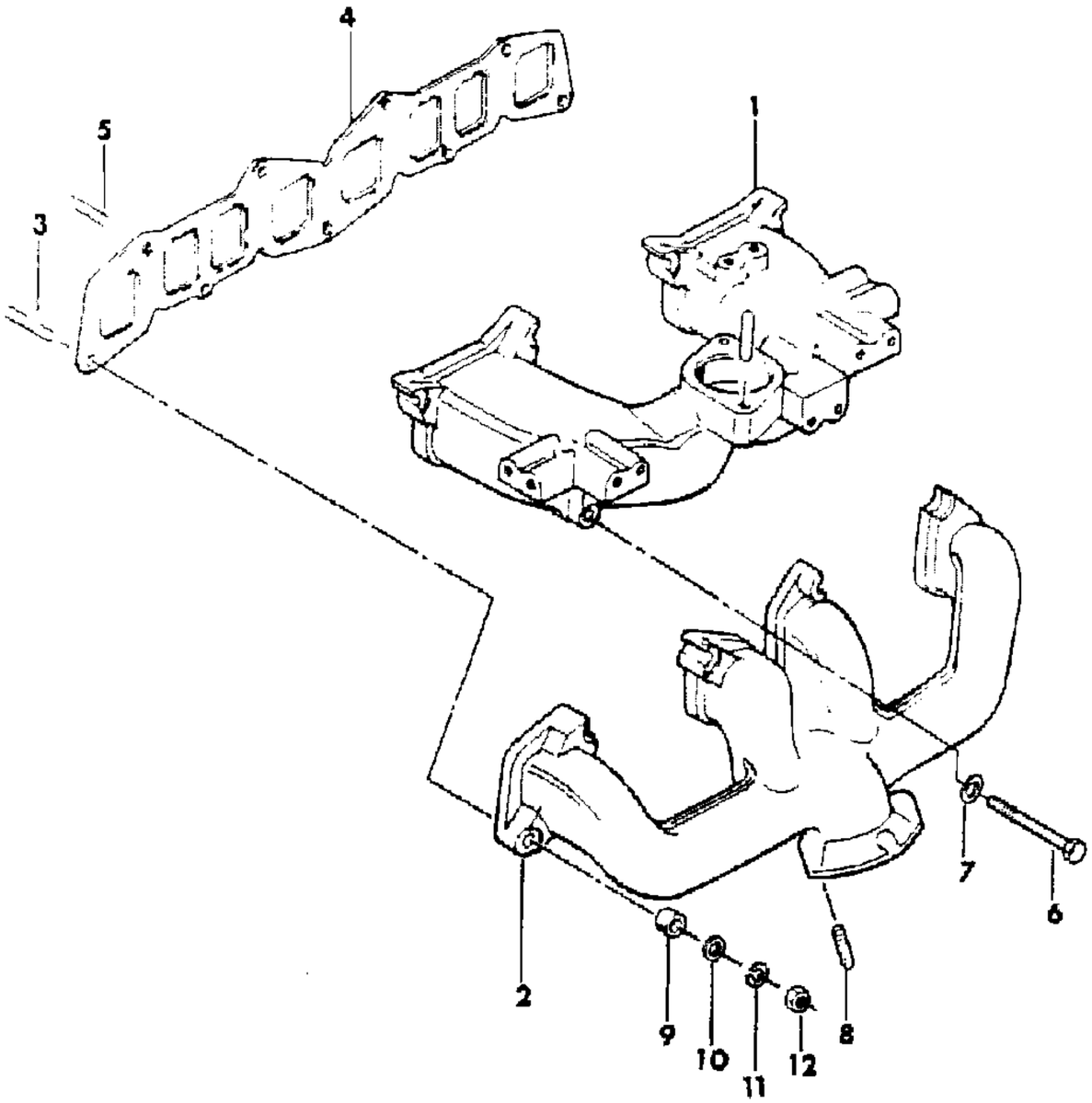

ITEM	PART NUMBER	QTY	BODY	MODEL	DESCRIPTION
1	J806 0297	1			MANIFOLD, Intake
2					MANIFOLD, Exhaust
	J806 0299	1			Up to Engine Serial #563644
	J806 0637	1			After Engine Serial #563644
3	J806 0037	3			STUD
4	J806 0300	1			GASKET
5	J806 0038	4			STUD
6	J806 0044	2			BOLT
7	J806 0064	2			WASHER, Lock
8	J806 0083	2			STUD
9	J806 0301	2			SLEEVE
10	J806 0074	7			WASHER, Plain
11	J806 0064	7			WASHER, Lock
12	J806 0058	7			NUT

MODEL CODES
16=Cherokee 2 Dr.(1981-83)
17=Cherokee 2 Dr.(1981-83)
73=Cherokee 2WD-2 Dr.(1984-86)
74=Cherokee 2WD-4 Dr.(1984-86)
18=Cherokee 4 Dr.(1981-83)
77=Cherokee 4WD-2 Dr.(1984-86)
78=Cherokee 4WD-4 Dr.(1984-86)
85=CJ-5 (1981-83)
86=CJ-6(1981)
87=CJ-7(1981-86)
88=CJ-8, Scrambler(1981-86)
64=Comanche 2WD-6 Ft. Box(1986)
66=Comanche 2WD-7 Ft. Box(1986)
63=Comanche 4WD-6 Ft. Box(1986)
65=Comanche 4WD-7 Ft. Box(1986)
15=Grand Wagoneer 4 Dr.(1984-86)
25=J-10 Truck 7 Ft. Box(1981-84)
26=J10 Truck 8 Ft. Box(1981-86)
27=J-20 Truck 8 Ft. Box(1981-86)
15=Wagoneer 4 Dr.(1981-83)
75=Wagoneer 4WD-4 Dr.(1984-86)

BODY
CJ=CJ-5, CJ-6, CJ-7, CJ-8, Scrambler(1981-86)
MJ=Comanche Pickup(1986)

STYLES
SJ=Wagoneer(1981-83), Grand Wagoneer(1984-86), Cherokee(1981-83), J-10, J-20(1981-86)
XJ=Wagoneer(1984-86), Cherokee(1984-86)

AR = Use as Required - = Non Illustrated Part P.A.R. = Paint as Required

« RETURN TO GROUP INDEX

OIL COOLER AND FILTER 1981-85 ISUZU DIESEL, EXPORT CJ-5,6,7,8
Figure 9A-900

81J58 900

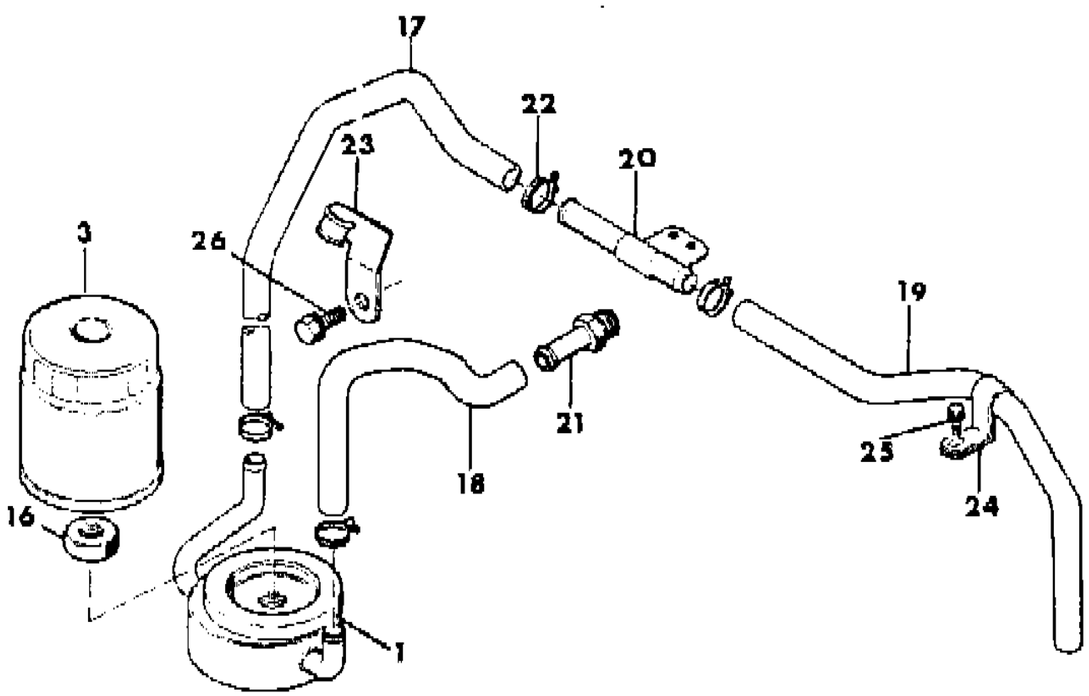

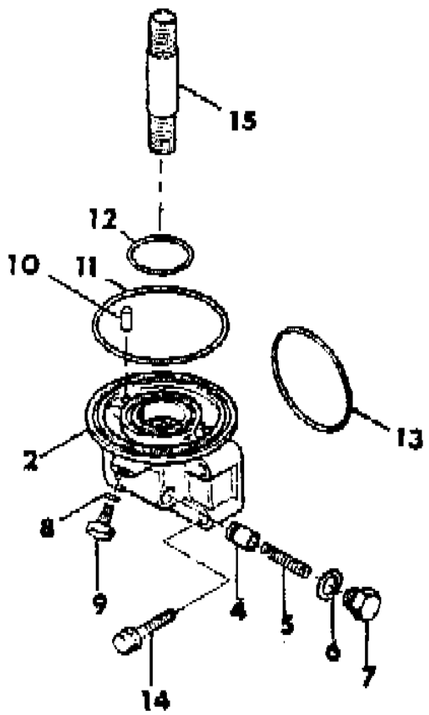

ITEM	PART NUMBER	QTY	BODY	MODEL	DESCRIPTION
1	J806 0240	1			COOLER, Engine Oil
2	J806 0268	1			BASE
3	J806 0266	1			FILTER, Engine Oil
4	J806 0263	1			VALVE
5	J806 0098	1			SPRING
6	J806 0089	1			GASKET
7	J806 0274	1			PLUG
8	J806 0156	1			O-RING
9	J806 0135	1			PLUG
10	J806 0269	1			PIN
11	J806 0104	1			O-RING
12	J806 0091	1			O-RING
13	J806 0270	1			O-RING
14	J806 0029	2			BOLT
15	J806 0271	1			CONNECTOR
16	J806 0587	1			NUT
17	J806 0086	1			HOSE, Supply
18	J806 0088	1			HOSE, Return
19	J806 0087	1			HOSE
20	J806 0108	1			CONNECTOR
21	J806 0140	1			FITTING
22	J806 0148	6			CLAMP
23	J806 0121	1			BRACKET
24	J806 0117	1			CLIP
25	J806 0025	1			BOLT
26	J806 0009	1			BOLT

MODEL CODES

16=Cherokee 2 Dr.(1981-83)
17=Cherokee 2 Dr.(1981-83)
73=Cherokee 2WD-2 Dr.(1984-86)
74=Cherokee 2WD-4 Dr.(1984-86)
18=Cherokee 4 Dr.(1981-83)
77=Cherokee 4WD-2 Dr.(1984-86)
78=Cherokee 4WD-4 Dr.(1984-86)
85=CJ-5 (1981-83)
86=CJ-6(1981)
87=CJ-7(1981-86)
88=CJ-8, Scrambler(1981-86)
64=Comanche 2WD-6 Ft. Box(1986)
66=Comanche 2WD-7 Ft. Box(1986)
63=Comanche 4WD-6 Ft. Box(1986)
65=Comanche 4WD-7 Ft. Box(1986)
15=Grand Wagoneer 4 Dr.(1984-86)
25=J-10 Truck 7 Ft. Box(1981-84)
26=J10 Truck 8 Ft. Box(1981-86)
27=J-20 Truck 8 Ft. Box(1981-86)
15=Wagoneer 4 Dr.(1981-83)
75=Wagoneer 4WD-4 Dr.(1984-86)

BODY
CJ=CJ-5, CJ-6, CJ-7, CJ-8, Scrambler(1981-86)
MJ=Comanche Pickup(1986)

STYLES
SJ=Wagoneer(1981-83), Grand Wagoneer(1984-86), Cherokee(1981-83), J-10, J-20(1981-86)
XJ=Wagoneer(1984-86), Cherokee(1984-86)

AR = Use as Required - = Non Illustrated Part P.A.R. = Paint as Required

« RETURN TO GROUP INDEX

ENGINE MOUNTING 1981-85 ISUZU DIESEL, EXPORT CJ-5,6,7,8
Figure 9A-1000

81J58 1000

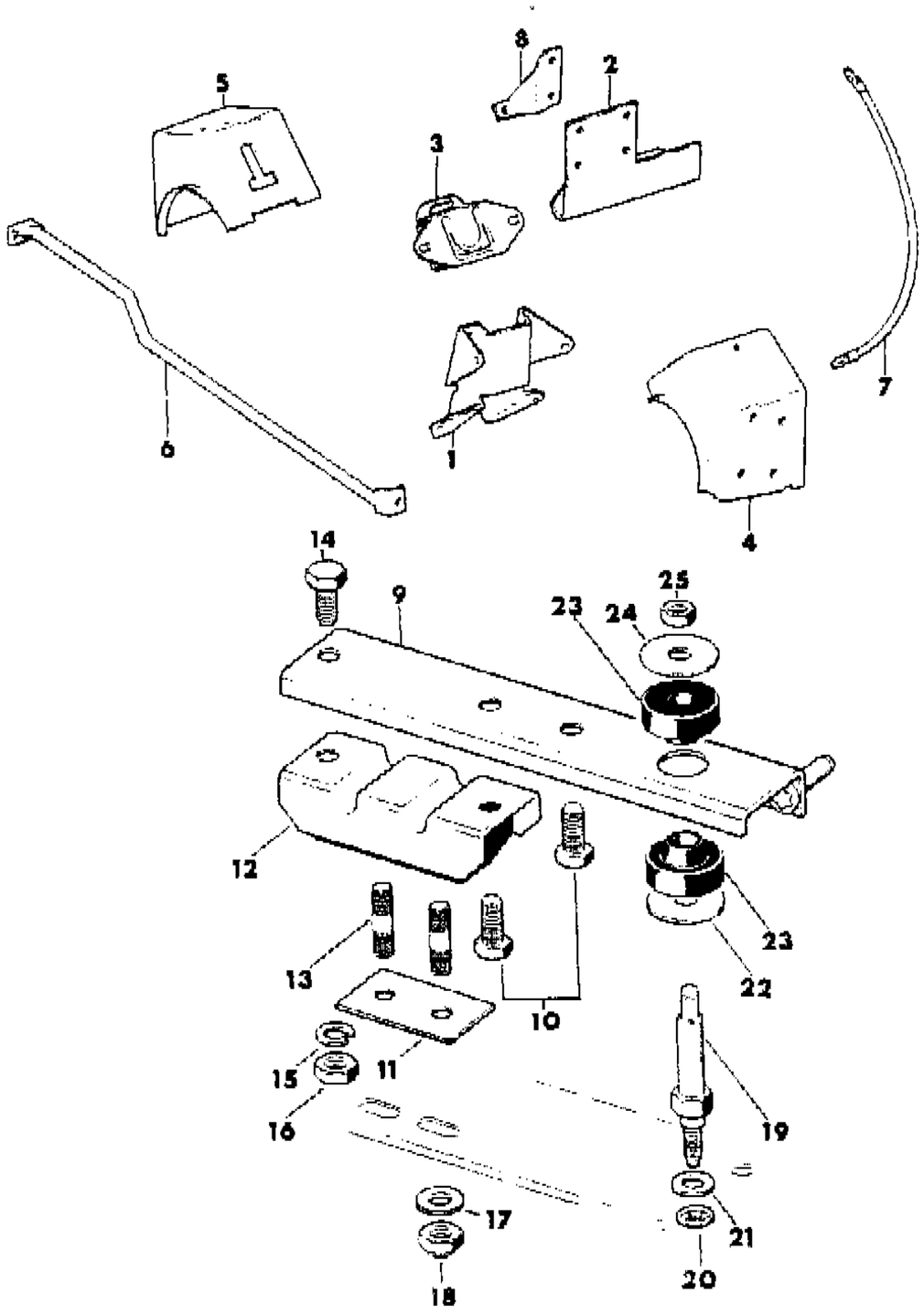

ITEM	PART NUMBER	QTY	BODY	MODEL	DESCRIPTION
1	J536 1465	1			BRACKET, Engine Left
2	J536 1464	1			BRACKET, Engine, Right
3	J536 1520	1			ENGINE
4	J536 1831	2			BRACKET, Left
5	J536 1830	1			BRACKET, Right
6	J535 5942	1			BAR, Tie
7	J094 6861	1			CABLE
8	J536 1466	1			REINFORCEMENT
9	J536 1157	1			BRACKET
10	J400 6110	2			BOOT ***
11	J536 1885	1			SPACER
12	J137 0910	1			INSULATOR
13	J400 4819	2			STUD
14	J018 0145	1			BOLT
15	J012 0383	1			WASHER
16	J027 1501	1			NUT
17	J400 1120	2			WASHER
18	J941 3215	2			NUT
19	J535 8879	1			STUD
20	J941 1783	1			NUT
21	J400 1134	1			WASHER
22	J094 1399	1			WASHER
23	J094 5266	2			INSULATOR
24	J094 5269	1			WASHER
25	J941 1783	1			NUT

MODEL CODES

16=Cherokee 2 Dr.(1981-83)
17=Cherokee 2 Dr.(1981-83)
73=Cherokee 2WD-2 Dr.(1984-86)
74=Cherokee 2WD-4 Dr.(1984-86)
18=Cherokee 4 Dr.(1981-83)
77=Cherokee 4WD-2 Dr.(1984-86)
78=Cherokee 4WD-4 Dr.(1984-86)
85=CJ-5 (1981-83)
86=CJ-6(1981)
87=CJ-7(1981-86)
88=CJ-8, Scrambler(1981-86)
64=Comanche 2WD-6 Ft. Box(1986)
66=Comanche 2WD-7 Ft. Box(1986)
63=Comanche 4WD-6 Ft. Box(1986)
65=Comanche 4WD-7 Ft. Box(1986)
15=Grand Wagoneer 4 Dr.(1984-86)
25=J-10 Truck 7 Ft. Box(1981-84)
26=J10 Truck 8 Ft. Box(1981-86)
27=J-20 Truck 8 Ft. Box(1981-86)
15=Wagoneer 4 Dr.(1981-83)
75=Wagoneer 4WD-4 Dr.(1984-86)

BODY
CJ=CJ-5, CJ-6, CJ-7, CJ-8, Scrambler(1981-86)
MJ=Comanche Pickup(1986)

STYLES
SJ=Wagoneer(1981-83), Grand Wagoneer(1984-86), Cherokee(1981-83), J-10, J-20(1981-86)
XJ=Wagoneer(1984-86), Cherokee(1984-86)

AR = Use as Required - = Non Illustrated Part P.A.R. = Paint as Required

« RETURN TO GROUP INDEX

BLOCK, ENGINE 1986 RENAULT DIESEL, EXPORT CJ-7,8
Figure 9A-1100

81J58 1100

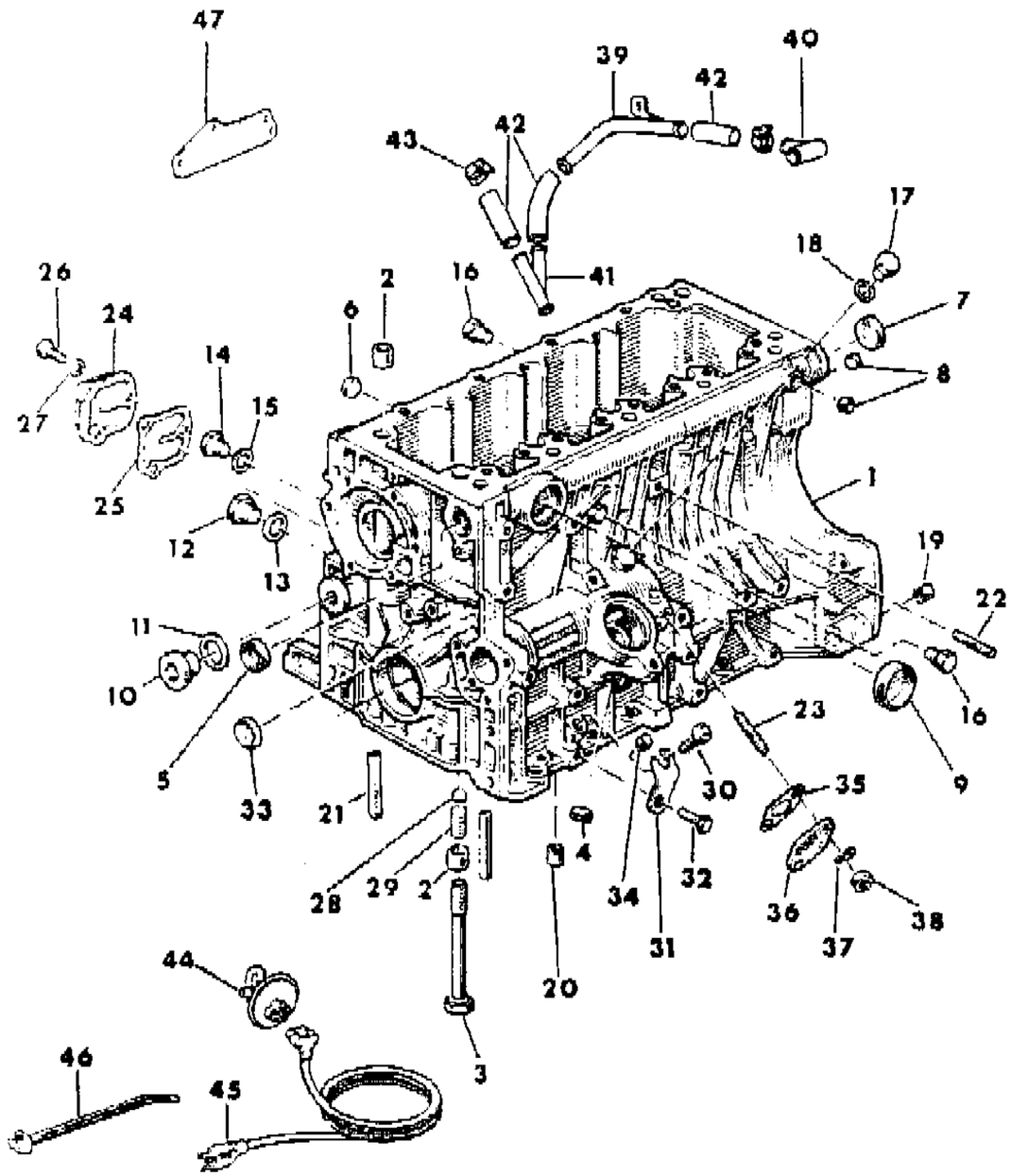

ITEM	PART NUMBER	QTY	BODY	MODEL	DESCRIPTION
1	T146 1328	1			BLOCK, Engine
2	T501 0061	AR			PIN
3	T058 9081	10			BOLT
4					PLUG
	T307 5032	1			10mm Diameter
	T307 5138	1			12mm Diameter
5	T307 5070	1			PLUG
6	T307 5018	1			PLUG
7	T307 5034	1			PLUG
8	T307 5039	2			PLUG
9	T307 5044	1			PLUG
10	T307 5137	1			PLUG
11	T302 6015	1			GASKET
12	T307 5076	1			PLUG
13	J306 2014	1			GASKET
14	T307 5025	1			PLUG
15	T306 1028	1			GASKET
16	T307 5009	2			PLUG
17	T307 5029	1			PLUG
18	T306 2013	1			GASKET
19	T501 0126	AR			PIN
20	J501 0006	AR			PIN
21					SEAL
	T134 9381	AR			5.10mm Wide
	T134 9382	AR			5.40mm Wide
22	T302 7130	1			STUD
23	T302 7138	2			STUD
24	T067 7302	1			COVER, Engine Block Side, Right
25	T066 3306	3			GASKET
26	T300 1236	3			BOLT
27	T305 5031	3			WASHER
28	T502 7023	AR			SEAL
29	T307 5118	1			PLUG
30	T489 5580	1			PLUG
31	T426 3080	1			RETAINER
32	T300 1160	1			BOLT
33	T307 5015	1			PLUG
34	T307 5067	1			PLUG
35	T306 5088	1			GASKET

MODEL CODES
16=Cherokee 2 Dr.(1981-83)
17=Cherokee 2 Dr.(1981-83)
73=Cherokee 2WD-2 Dr.(1984-86)
74=Cherokee 2WD-4 Dr.(1984-86)
18=Cherokee 4 Dr.(1981-83)
77=Cherokee 4WD-2 Dr.(1984-86)
78=Cherokee 4WD-4 Dr.(1984-86)
85=CJ-5 (1981-83)
86=CJ-6(1981)
87=CJ-7(1981-86)
88=CJ-8, Scrambler(1981-86)
64=Comanche 2WD-6 Ft. Box(1986)
66=Comanche 2WD-7 Ft. Box(1986)
63=Comanche 4WD-6 Ft. Box(1986)
65=Comanche 4WD-7 Ft. Box(1986)
15=Grand Wagoneer 4 Dr.(1984-86)
25=J-10 Truck 7 Ft. Box(1981-84)
26=J10 Truck 8 Ft. Box(1981-86)
27=J-20 Truck 8 Ft. Box(1981-86)
15=Wagoneer 4 Dr.(1981-83)
75=Wagoneer 4WD-4 Dr.(1984-86)

BODY
CJ=CJ-5, CJ-6, CJ-7, CJ-8, Scrambler(1981-86)
MJ=Comanche Pickup(1986)

STYLES
SJ=Wagoneer(1981-83), Grand Wagoneer(1984-86), Cherokee(1981-83), J-10, J-20(1981-86)
XJ=Wagoneer(1984-86), Cherokee(1984-86)

AR = Use as Required - = Non Illustrated Part P.A.R. = Paint as Required

« RETURN TO GROUP INDEX »

BLOCK, ENGINE 1986 RENAULT DIESEL, EXPORT CJ-7,8
Figure 9A-1100

81J58 1100

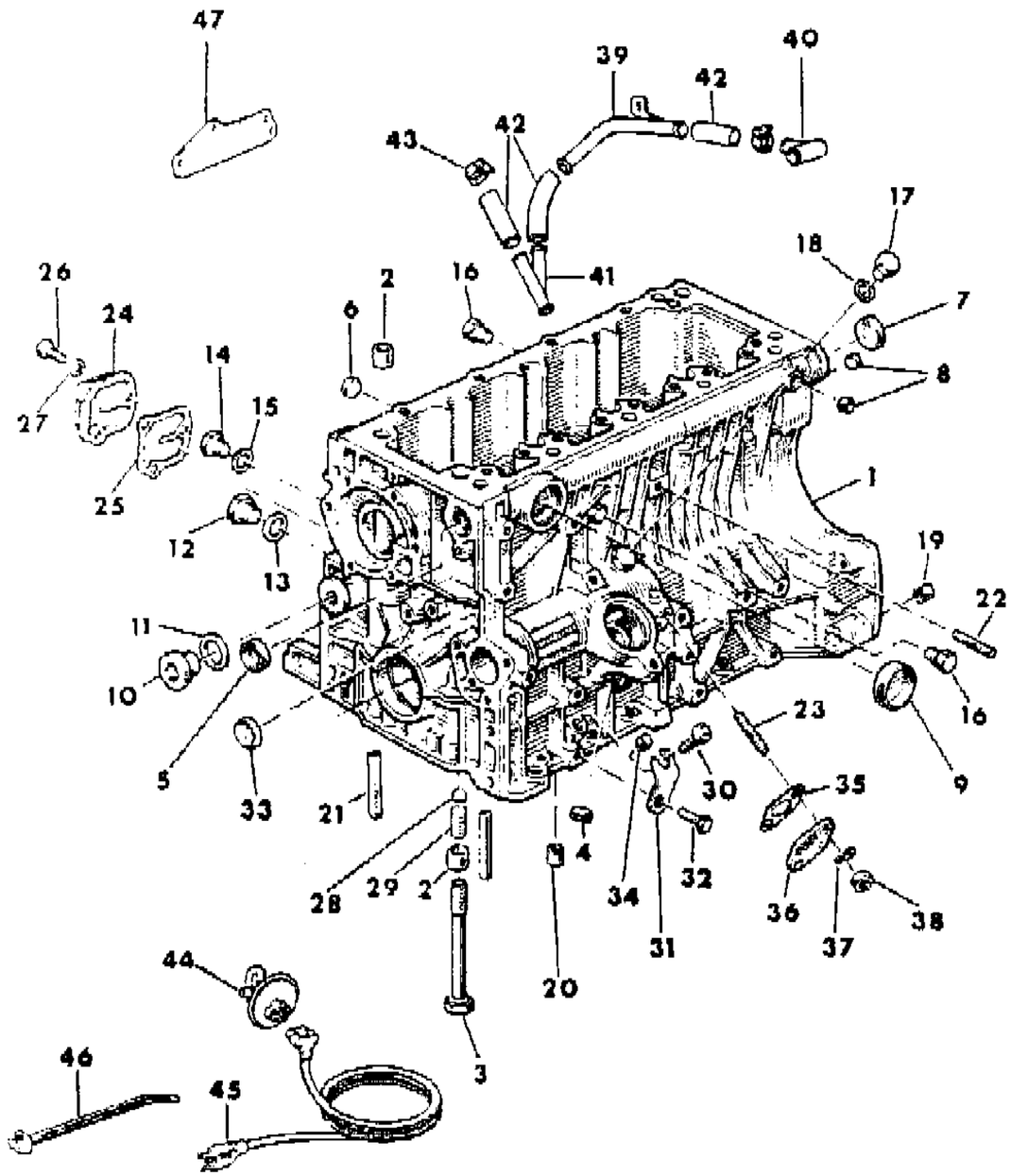

ITEM	PART NUMBER	QTY	BODY	MODEL	DESCRIPTION
36	T066 9805	1			COVER, Engine Block Side, Left
37	J305 7005	2			WASHER
38	J303 2018	2			NUT
39	5300 3925	1			TUBE, Engine Oil Drain
40	T072 7942	1			TEE, Oil Drain Upper
41	T072 7945	1			TEE, Oil Drain Lower
42	5300 3934	3			HOSE
43	J320 3076	6			CLAMP
44	3300 1361	1			HEATER, Engine Block
45	5600 0828	1			CORD, Power Supply
46					STRAP
	J322 3227	AR			200mm
	J369 3058	AR			300mm
	J323 0270	AR			350mm
	J323 5187	AR			450mm
47	T067 1563	2			BRACKET

MODEL CODES

16=Cherokee 2 Dr.(1981-83)
17=Cherokee 2 Dr.(1981-83)
73=Cherokee 2WD-2 Dr.(1984-86)
74=Cherokee 2WD-4 Dr.(1984-86)
18=Cherokee 4 Dr.(1981-83)
77=Cherokee 4WD-2 Dr.(1984-86)
78=Cherokee 4WD-4 Dr.(1984-86)
85=CJ-5 (1981-83)
86=CJ-6(1981)
87=CJ-7(1981-86)
88=CJ-8, Scrambler(1981-86)
64=Comanche 2WD-6 Ft. Box(1986)
66=Comanche 2WD-7 Ft. Box(1986)
63=Comanche 4WD-6 Ft. Box(1986)
65=Comanche 4WD-7 Ft. Box(1986)
15=Grand Wagoneer 4 Dr.(1984-86)
25=J-10 Truck 7 Ft. Box(1981-84)
26=J10 Truck 8 Ft. Box(1981-86)
27=J-20 Truck 8 Ft. Box(1981-86)
15=Wagoneer 4 Dr.(1981-83)
75=Wagoneer 4WD-4 Dr.(1984-86)

BODY
CJ=CJ-5, CJ-6, CJ-7, CJ-8, Scrambler(1981-86)
MJ=Comanche Pickup(1986)

STYLES
SJ=Wagoneer(1981-83), Grand Wagoneer(1984-86), Cherokee(1981-83), J-10, J-20(1981-86)
XJ=Wagoneer(1984-86), Cherokee(1984-86)

AR = Use as Required - = Non Illustrated Part P.A.R. = Paint as Required

« RETURN TO GROUP INDEX

GASKET SET 1986 RENAULT DIESEL, EXPORT CJ-7,8
Figure 9A-1200

81J58 1200

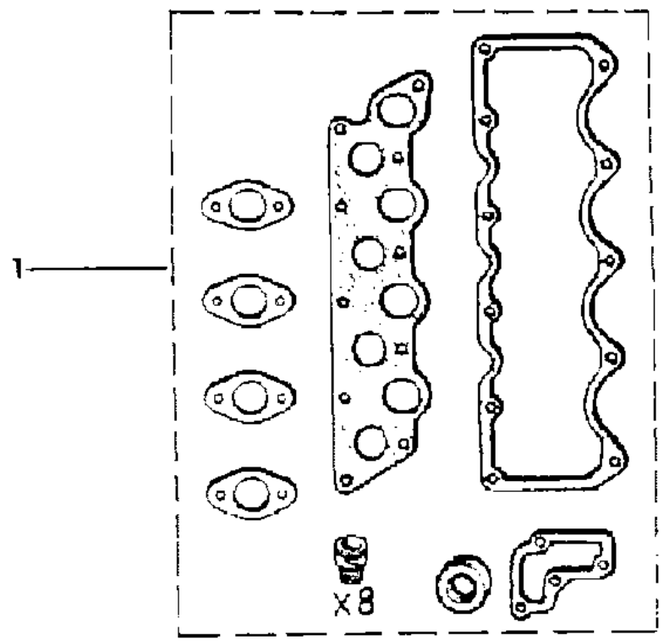

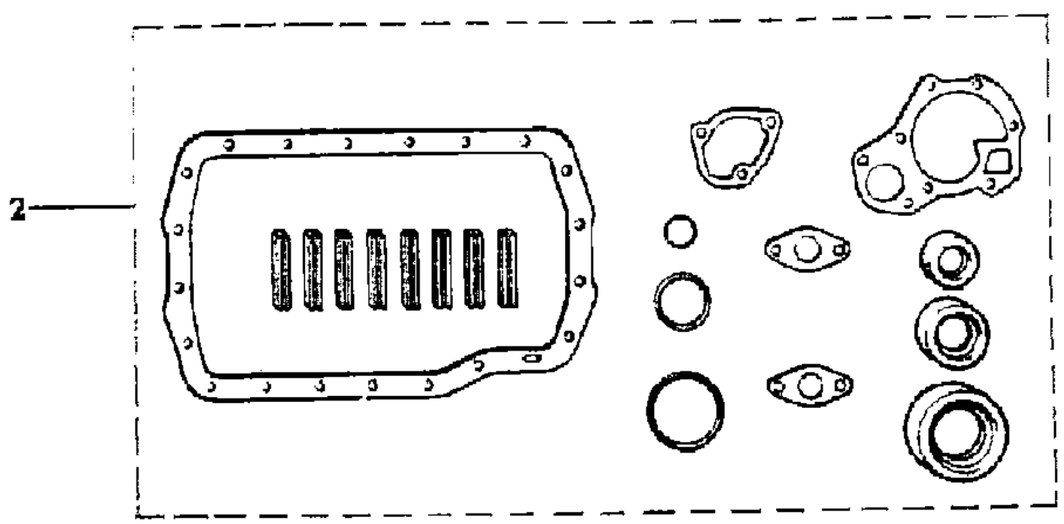

ITEM	PART NUMBER	QTY	BODY	MODEL	DESCRIPTION
1	T146 1765	1			GASKET PACKAGE, Engine Upper
2	T146 1334	1			GASKET PACKAGE, Engine Lower

MODEL CODES
16=Cherokee 2 Dr.(1981-83)
17=Cherokee 2 Dr.(1981-83)
73=Cherokee 2WD-2 Dr.(1984-86)
74=Cherokee 2WD-4 Dr.(1984-86)
18=Cherokee 4 Dr.(1981-83)
77=Cherokee 4WD-2 Dr.(1984-86)
78=Cherokee 4WD-4 Dr.(1984-86)
85=CJ-5 (1981-83)
86=CJ-6(1981)
87=CJ-7(1981-86)
88=CJ-8, Scrambler(1981-86)
64=Comanche 2WD-6 Ft. Box(1986)
66=Comanche 2WD-7 Ft. Box(1986)
63=Comanche 4WD-6 Ft. Box(1986)
65=Comanche 4WD-7 Ft. Box(1986)
15=Grand Wagoneer 4 Dr.(1984-86)
25=J-10 Truck 7 Ft. Box(1981-84)
26=J10 Truck 8 Ft. Box(1981-86)
27=J-20 Truck 8 Ft. Box(1981-86)
15=Wagoneer 4 Dr.(1981-83)
75=Wagoneer 4WD-4 Dr.(1984-86)

BODY
CJ=CJ-5, CJ-6, CJ-7, CJ-8, Scrambler(1981-86)
MJ=Comanche Pickup(1986)

STYLES
SJ=Wagoneer(1981-83), Grand Wagoneer(1984-86), Cherokee(1981-83), J-10, J-20(1981-86)
XJ=Wagoneer(1984-86), Cherokee(1984-86)

AR = Use as Required - = Non Illustrated Part P.A.R. = Paint as Required

« RETURN TO GROUP INDEX

CYLINDER HEAD 1986 RENAULT DIESEL, EXPORT CJ-7,8
Figure 9A-1300

81J58 1300

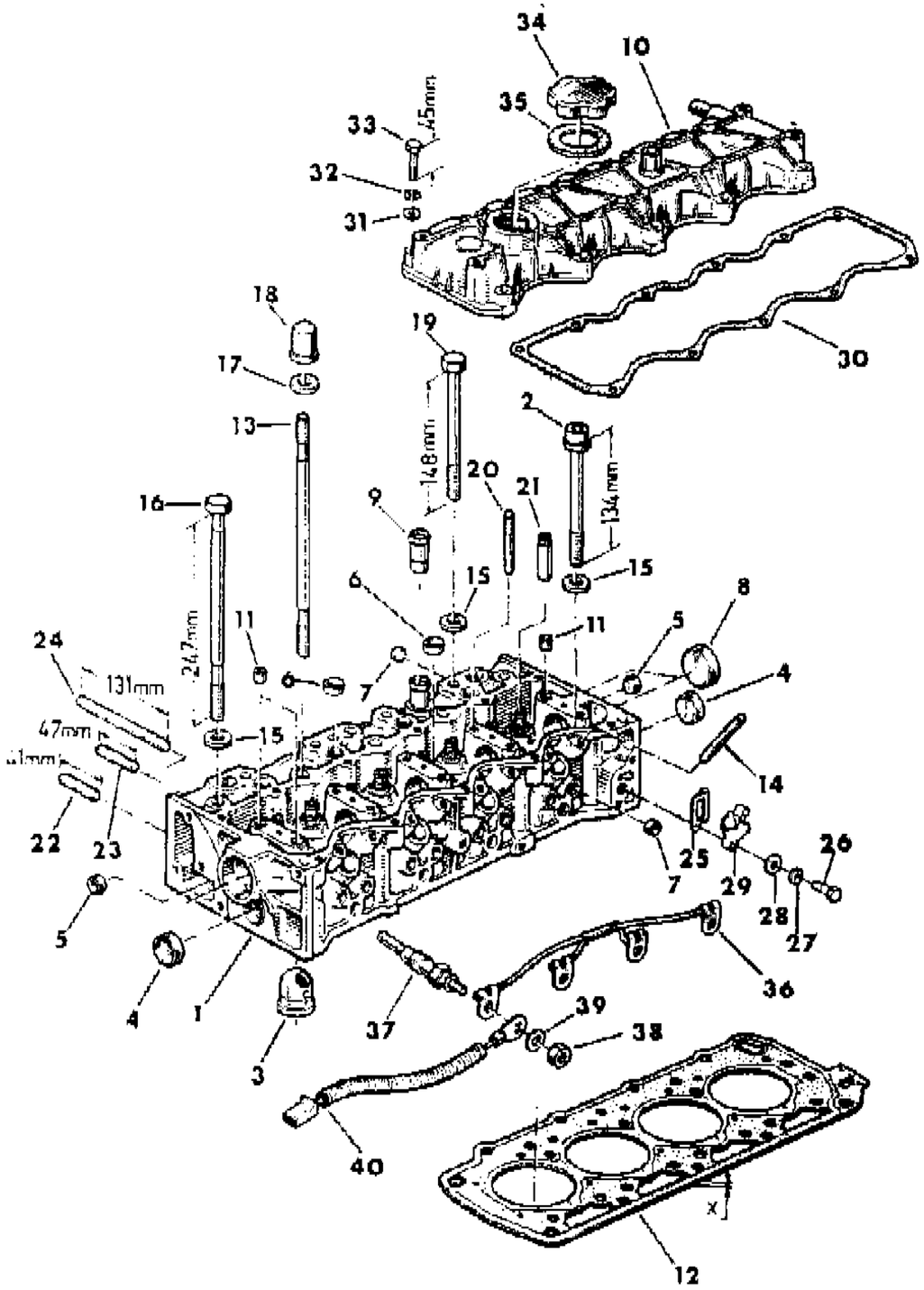

ITEM	PART NUMBER	QTY	BODY	MODEL	DESCRIPTION
1	T146 3279	1			HEAD, Engine Cylinder
2	T067 5865	AR			BOLT
3	T134 9426	4			CHAMBER, Precombustion ***
4	T307 5070	2			PLUG
5	T307 5041	2			PLUG
6	T307 5038	2			PLUG
7					PLUG
	T307 5032	AR			10mm
	T307 5138	AR			12mm
8	T307 5044	2			PLUG
9					NIPPLE, Coolant
	T063 8975	1			18.0mm
	T063 9062	1			20.6mm
10	T071 7274	1			COVER, Cylinder Head
11	T066 5489	3			SLEEVE
12					GASKET
	T012 8289	AR			1.6mm
	T071 1666	AR			1.7mm
	T102 8290	1			1.8mm
13	T067 5862	3			STUD
14	T302 7077	8			STUD
15	T067 5867	AR			WASHER
16	T067 5864	2			BOLT
17	T067 5868	AR			WASHER
18	T067 5866	3			NUT
19	T067 5863	8			BOLT
20	T302 7211	AR			STUD
21	T146 2486	8			GUIDE, (13.35mm)
22	T302 7025	AR			STUD
23	T302 7129	AR			STUD
24	T302 7166	AR			STUD
25	T068 4487	1			GASKET
26	T300 1123	2			BOLT
27	T305 5031	2			WASHER, Lock
28	T140 2065	2			WASHER, Plain
29	T066 6761	1			HOUSING
30	T066 2455	1			GASKET
31	T305 3074	11			WASHER, Flat
32	T305 5031	11			WASHER, Lock

MODEL CODES
16=Cherokee 2 Dr.(1981-83)
17=Cherokee 2 Dr.(1981-83)
73=Cherokee 2WD-2 Dr.(1984-86)
74=Cherokee 2WD-4 Dr.(1984-86)
18=Cherokee 4 Dr.(1981-83)
77=Cherokee 4WD-2 Dr.(1984-86)
78=Cherokee 4WD-4 Dr.(1984-86)
85=CJ-5 (1981-83)
86=CJ-6(1981)
87=CJ-7(1981-86)
88=CJ-8, Scrambler(1981-86)
64=Comanche 2WD-6 Ft. Box(1986)
66=Comanche 2WD-7 Ft. Box(1986)
63=Comanche 4WD-6 Ft. Box(1986)
65=Comanche 4WD-7 Ft. Box(1986)
15=Grand Wagoneer 4 Dr.(1984-86)
25=J-10 Truck 7 Ft. Box(1981-84)
26=J10 Truck 8 Ft. Box(1981-86)
27=J-20 Truck 8 Ft. Box(1981-86)
15=Wagoneer 4 Dr.(1981-83)
75=Wagoneer 4WD-4 Dr.(1984-86)

BODY
CJ=CJ-5, CJ-6, CJ-7, CJ-8, Scrambler(1981-86)
MJ=Comanche Pickup(1986)

STYLES
SJ=Wagoneer(1981-83), Grand Wagoneer(1984-86), Cherokee(1981-83), J-10, J-20(1981-86)
XJ=Wagoneer(1984-86), Cherokee(1984-86)

AR = Use as Required - = Non Illustrated Part P.A.R. = Paint as Required

« RETURN TO GROUP INDEX »

CYLINDER HEAD 1986 RENAULT DIESEL, EXPORT CJ-7,8
Figure 9A-1300

81J58 1300

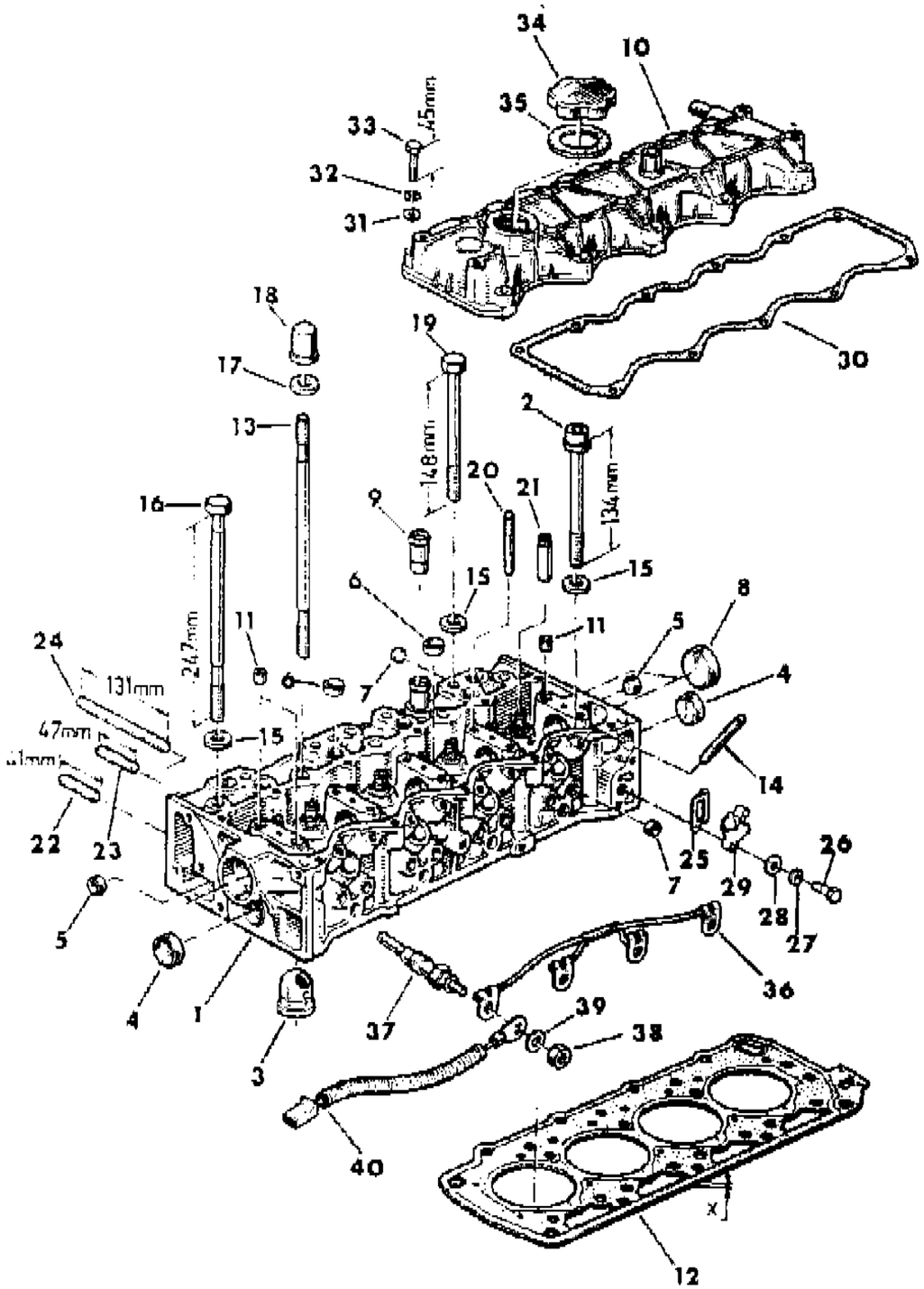

ITEM	PART NUMBER	QTY	BODY	MODEL	DESCRIPTION
33	T300 1607	11			BOLT
34	T072 1928	1			CAP
35	T071 8985	1			GASKET
36	T198 4952	1			CONNECTOR, Glow Plug Buss Bar
37	T134 9475	4			GLOW PLUG ***
38	T140 5672	4			NUT
39	T305 7031	4			WASHER
40	5603 2504	2			HARNESS, Glow Plug

MODEL CODES

16=Cherokee 2 Dr.(1981-83)
17=Cherokee 2 Dr.(1981-83)
73=Cherokee 2WD-2 Dr.(1984-86)
74=Cherokee 2WD-4 Dr.(1984-86)
18=Cherokee 4 Dr.(1981-83)
77=Cherokee 4WD-2 Dr.(1984-86)
78=Cherokee 4WD-4 Dr.(1984-86)
85=CJ-5 (1981-83)
86=CJ-6(1981)
87=CJ-7(1981-86)
88=CJ-8, Scrambler(1981-86)
64=Comanche 2WD-6 Ft. Box(1986)
66=Comanche 2WD-7 Ft. Box(1986)
63=Comanche 4WD-6 Ft. Box(1986)
65=Comanche 4WD-7 Ft. Box(1986)
15=Grand Wagoneer 4 Dr.(1984-86)
25=J-10 Truck 7 Ft. Box(1981-84)
26=J10 Truck 8 Ft. Box(1981-86)
27=J-20 Truck 8 Ft. Box(1981-86)
15=Wagoneer 4 Dr.(1981-83)
75=Wagoneer 4WD-4 Dr.(1984-86)

BODY
CJ=CJ-5, CJ-6, CJ-7, CJ-8, Scrambler(1981-86)
MJ=Comanche Pickup(1986)

STYLES
SJ=Wagoneer(1981-83), Grand Wagoneer(1984-86), Cherokee(1981-83), J-10, J-20(1981-86)
XJ=Wagoneer(1984-86), Cherokee(1984-86)

AR = Use as Required - = Non Illustrated Part P.A.R. = Paint as Required

« RETURN TO GROUP INDEX

CRANKSHAFT, FLYWHEEL AND PISTON 1986 RENAULT DIESEL, EXPORT CJ-7,8
Figure 9A-1400

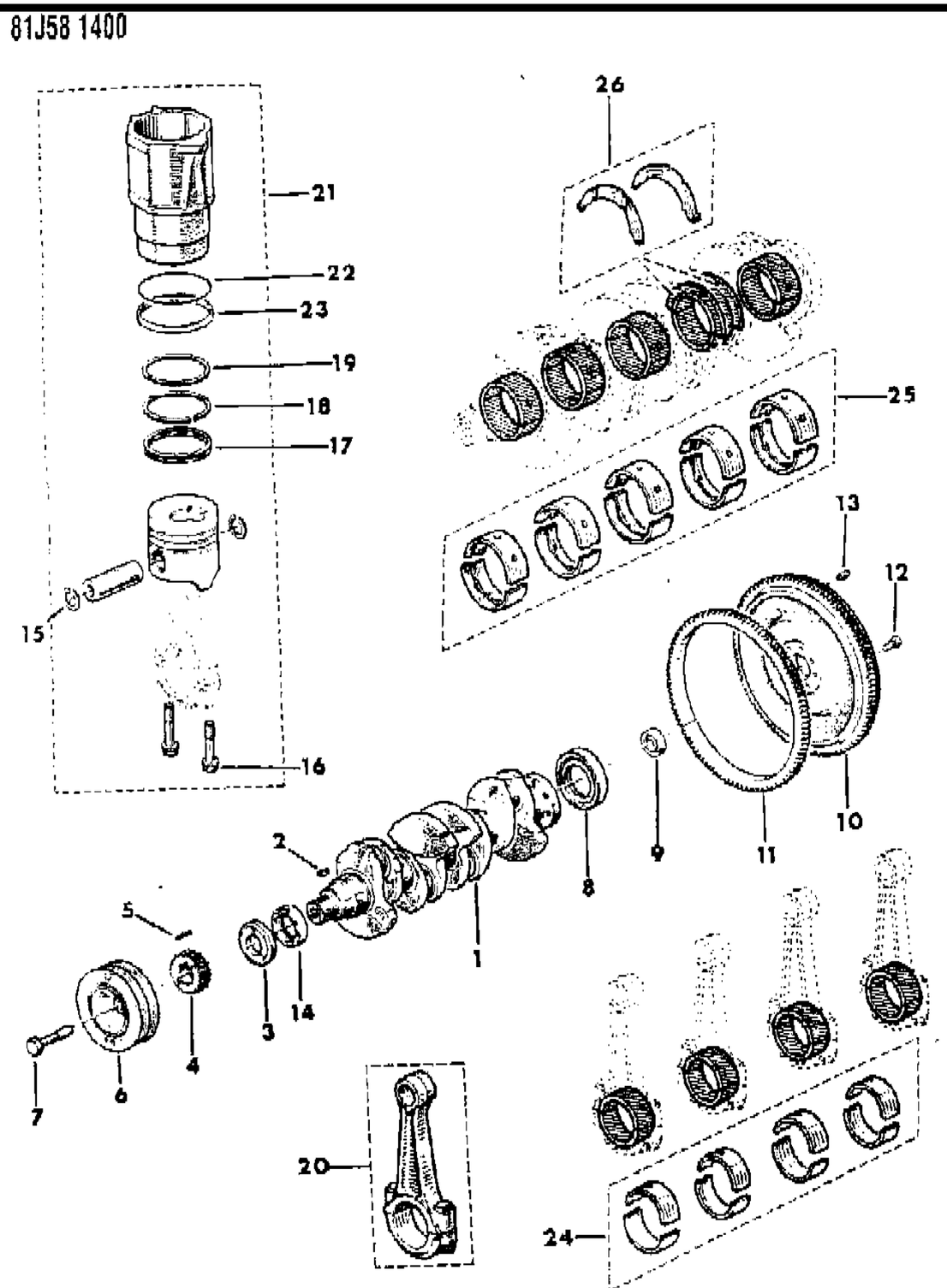

ITEM	PART NUMBER	QTY	BODY	MODEL	DESCRIPTION
1	T071 7853	1			CRANKSHAFT, (Without Bearings)
2	T307 0009	1			KEY, Shaft
3	T061 6979	1			SPACER
4	T134 9583	1			SPROCKET, Crankshaft
5	T489 5900	1			PIN
6	T134 9439	1			PULLEY, Crankshaft
7	T065 5889	1			BOLT
8	T134 9596	1			SEAL
9	T309 0310	1			BEARING, Pilot, With Manual Transmission
10	T159 6861	1			FLYWHEEL, With Manual Transmission
11	T066 4055	1			GEAR, Ring, With Manual Transmission
12	J061 2359	7			BOLT, With Manual Transmission
13	J306 7256	3			PIN, With Manual Transmission
14	T134 9595	1			SEAL
15	T067 6497	8			RETAINER, Piston Pin
16	T067 7771	8			BOLT
17	T134 8931	4			RING, Oil Control
18	T066 5607	4			RING, Lower Compression
19	T134 9640	4			RING, Upper Compression
20	T146 1321	1			ROD SET, Connecting ***
21	T146 1337	1			PISTON PACKAGE, Includes Sleeve ***
22	T134 8225	4			O-RING
23	T066 6025	4			GASKET
24					BEARING PACKAGE
	T134 9161	1			56.01mm (-.010")
	T134 9158	1			56.26mm (STD.)
25					BEARING PACKAGE
	T134 8543	1			62.63mm (-.010")
	T134 8542	1			62.88mm (STD)
26					BEARING PACKAGE
	T134 8320	1			2.80 to 2.85mm
	T134 8820	1			2.85 to 2.90mm
	T134 8821	1			2.90 to 2.95mm
	T134 8822	1			2.95 to 3.00mm

MODEL CODES

16=Cherokee 2 Dr.(1981-83)
17=Cherokee 2 Dr.(1981-83)
73=Cherokee 2WD-2 Dr.(1984-86)
74=Cherokee 2WD-4 Dr.(1984-86)
18=Cherokee 4 Dr.(1981-83)
77=Cherokee 4WD-2 Dr.(1984-86)
78=Cherokee 4WD-4 Dr.(1984-86)
85=CJ-5 (1981-83)
86=CJ-6(1981)
87=CJ-7(1981-86)
88=CJ-8, Scrambler(1981-86)
64=Comanche 2WD-6 Ft. Box(1986)
66=Comanche 2WD-7 Ft. Box(1986)
63=Comanche 4WD-6 Ft. Box(1986)
65=Comanche 4WD-7 Ft. Box(1986)
15=Grand Wagoneer 4 Dr.(1984-86)
25=J-10 Truck 7 Ft. Box(1981-84)
26=J10 Truck 8 Ft. Box(1981-86)
27=J-20 Truck 8 Ft. Box(1981-86)
15=Wagoneer 4 Dr.(1981-83)
75=Wagoneer 4WD-4 Dr.(1984-86)

BODY

CJ=CJ-5, CJ-6, CJ-7, CJ-8, Scrambler(1981-86)
MJ=Comanche Pickup(1986)

STYLES

SJ=Wagoneer(1981-83), Grand Wagoneer(1984-86), Cherokee(1981-83), J-10, J-20(1981-86)
XJ=Wagoneer(1984-86), Cherokee(1984-86)

AR = Use as Required - = Non Illustrated Part P.A.R. = Paint as Required

« RETURN TO GROUP INDEX

CAMSHAFT AND VALVES 1986 RENAULT DIESEL, EXPORT CJ-7,8
Figure 9A-1500

81J58 1500

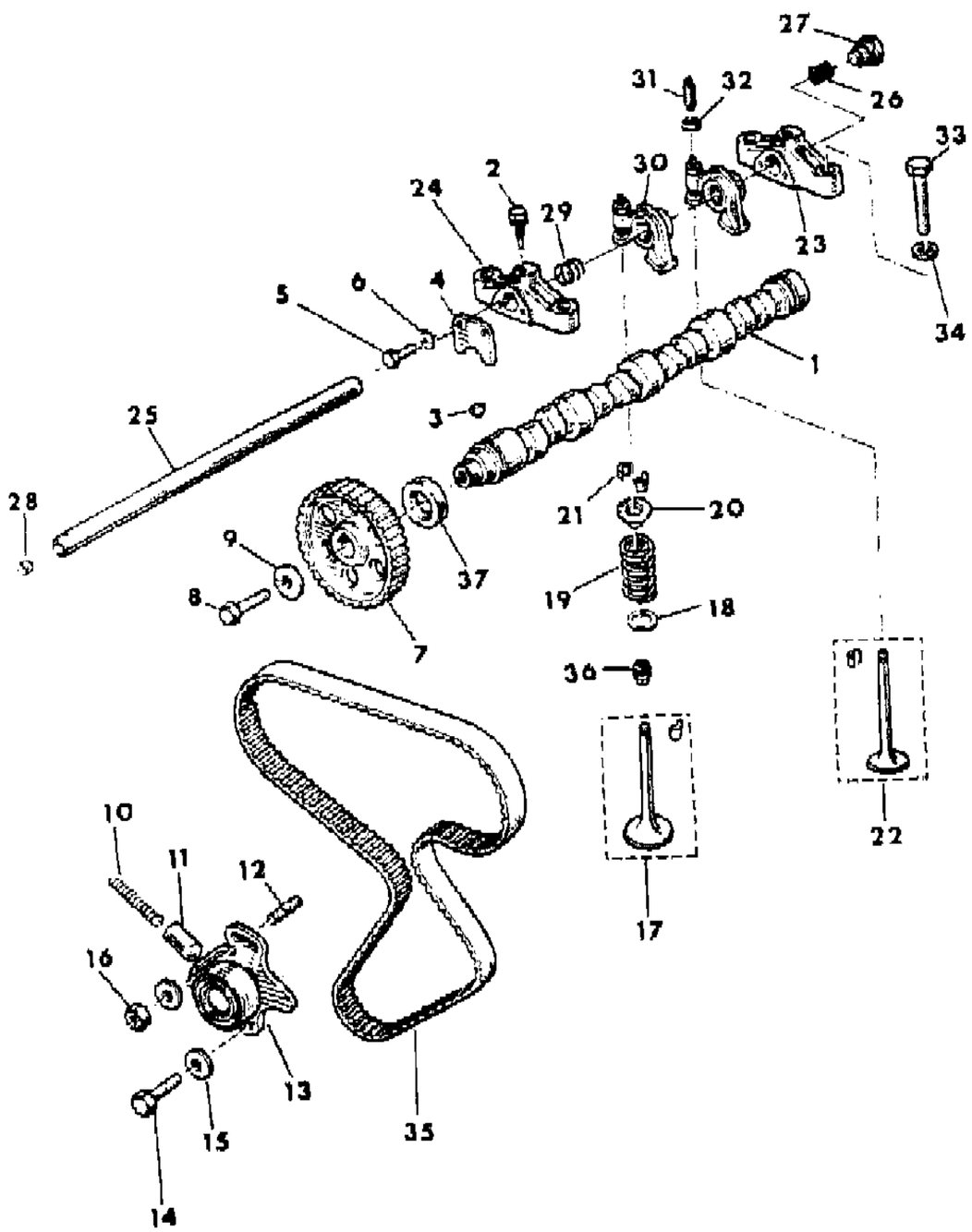

ITEM	PART NUMBER	QTY	BODY	MODEL	DESCRIPTION
1	T069 9231	1			CAMSHAFT
2	T024 5031	5			SCREW
3	T307 0007	1			KEY Shaft ***
4	T058 7893	1			RETAINER, Camshaft Thrust
5	J300 1138	2			BOLT
6	T305 6012	2			WASHER
7	T134 9586	1			SPROCKET, Camshaft
8	T310 1069	1			BOLT
9	T305 3189	1			WASHER
10	T501 5125	1			SPRING
11	T134 8251	1			TENSIONER
12	T302 7094	1			STUD
13	T072 2452	1			IDLER, Timing Belt ***
14	T066 5224	1			BOLT
15	T305 3037	2			WASHER
16	T140 5675	1			NUT
17	T146 1338	8			VALVE PACKAGE, Intake ***
18	T305 3099	8			SEAT, Spring
19	T067 3343	8			SPRING
20	T026 8948	8			RETAINER
21	T134 9125	16			KEEPER ***
22	T146 1339	1			VALVE PACKAGE, Exhaust ***
23	T065 4085	4			BRACE
24	T065 4084	1			BRACE
25	T146 3654	1			SHAFT, Rocker Arm
26	T065 0095	1			FILTER, Rocker Shaft Oil
27	T307 5053	1			PLUG
28	T307 5039	1			PLUG
29	T065 9821	AR			SPRING
30	T600 9641	8			ARM, Valve Rocker
31	T065 9962	8			SCREW
32	T303 2115	8			NUT
33	T300 1693	AR			BOLT
34	T777 7658	AR			WASHER
35	T066 3544	1			BELT, Timing
36	T134 9529	8			SEAL
37	T134 9626	1			SEAL

MODEL CODES

16=Cherokee 2 Dr.(1981-83)
17=Cherokee 2 Dr.(1981-83)
73=Cherokee 2WD-2 Dr.(1984-86)
74=Cherokee 2WD-4 Dr.(1984-86)
18=Cherokee 4 Dr.(1981-83)
77=Cherokee 4WD-2 Dr.(1984-86)
78=Cherokee 4WD-4 Dr.(1984-86)
85=CJ-5 (1981-83)
86=CJ-6(1981)
87=CJ-7(1981-86)
88=CJ-8, Scrambler(1981-86)
64=Comanche 2WD-6 Ft. Box(1986)
66=Comanche 2WD-7 Ft. Box(1986)
63=Comanche 4WD-6 Ft. Box(1986)
65=Comanche 4WD-7 Ft. Box(1986)
15=Grand Wagoneer 4 Dr.(1984-86)
25=J-10 Truck 7 Ft. Box(1981-84)
26=J10 Truck 8 Ft. Box(1981-86)
27=J-20 Truck 8 Ft. Box(1981-86)
15=Wagoneer 4 Dr.(1981-83)
75=Wagoneer 4WD-4 Dr.(1984-86)

BODY
CJ=CJ-5, CJ-6, CJ-7, CJ-8, Scrambler(1981-86)
MJ=Comanche Pickup(1986)

STYLES
SJ=Wagoneer(1981-83), Grand Wagoneer(1984-86), Cherokee(1981-83), J-10, J-20(1981-86)
XJ=Wagoneer(1984-86), Cherokee(1984-86)

AR = Use as Required - = Non Illustrated Part P.A.R. = Paint as Required

« RETURN TO GROUP INDEX

TIMING COVER AND INTERMEDIATE SHAFT 1986 RENAULT DIESEL, EXPORT CJ-7,8
Figure 9A-1600

81J58 1600

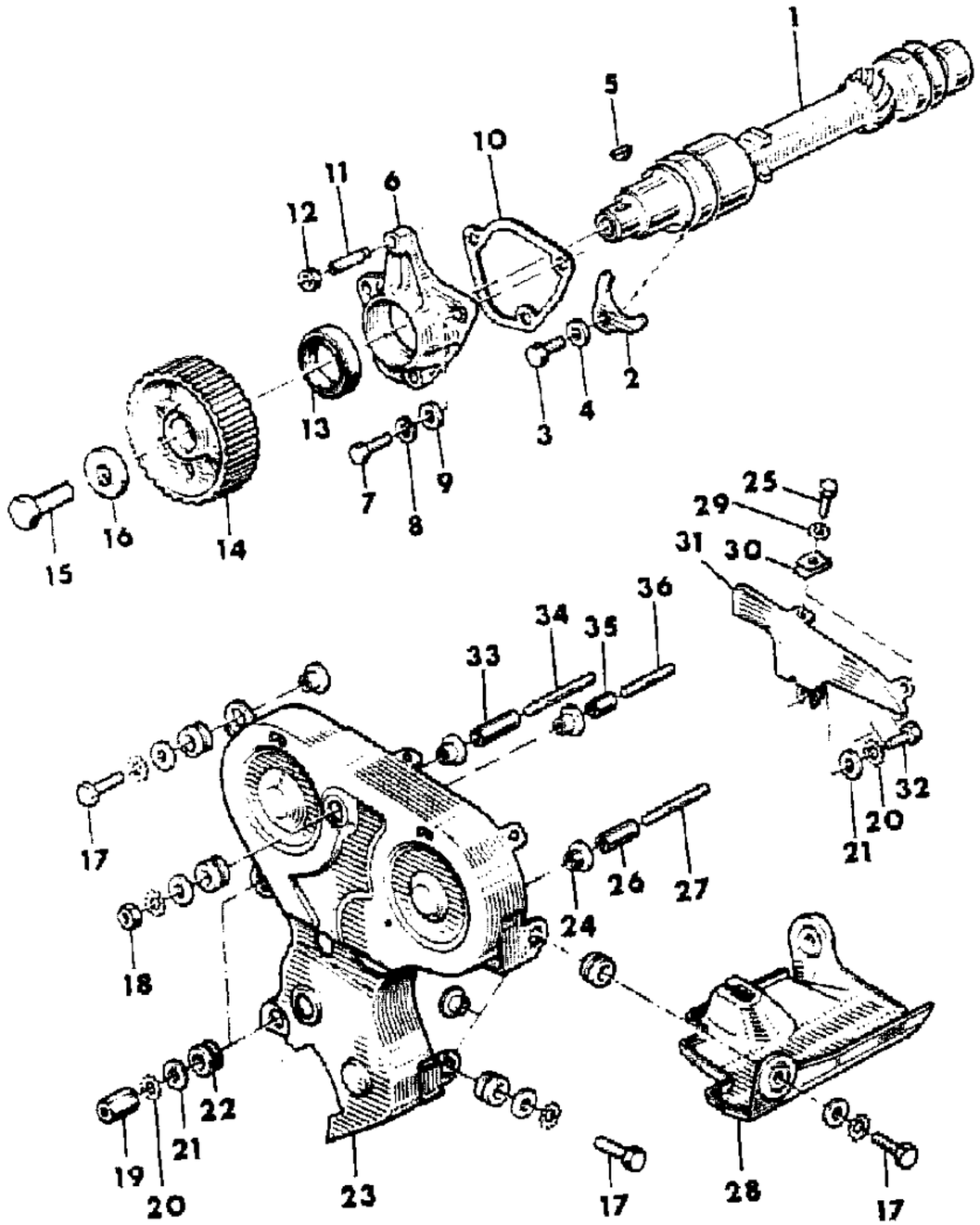

ITEM	PART NUMBER	QTY	BODY	MODEL	DESCRIPTION
1	T059 0867	1			SHAFT, Engine Intermediate
2	T072 4890	1			RETAINER, Shaft Thrust
3	T300 1160	1			BOLT
4	T305 3037	1			WASHER
5	T307 0007	1			KEY, Shaft
6	T065 5189	1			COVER, Intermediate Shaft
7	T300 1142	3			BOLT
8	T305 5031	3			WASHER, Lock
9	T305 3074	3			WASHER, Flat
10	T066 3163	1			GASKET
11	T302 7117	1			SCREW, Adjusting
12	T303 2010	1			NUT
13	T134 9625	1			SEAL
14	T134 9584	1			SPROCKET, Intermediate Shaft
15	T310 1069	1			BOLT
16	T305 3189	1			WASHER
17	T300 1142	3			BOLT
18	J303 2012	1			NUT
19	T303 2079	2			NUT, Sleeve
20	T305 6012	7			WASHER, Lock
21	T305 3038	7			WASHER, Flat
22	T063 4996	6			GROMMET
23	T066 4709	1			COVER, Timing Case Front
24	T061 6373	6			BUSHING
25	T300 1118	2			BOLT
26	T500 1001	1			SLEEVE
27	T302 7095	1			STUD
28	T069 3036	1			SHIELD, Alternator
29	J305 6008	2			WASHER
30	J304 6034	2			NUT, Clip
31	T066 4756	1			COVER, Timing Case Rear
32	T300 1236	1			BOLT
33	T500 1002	1			SLEEVE
34	T302 7151	1			STUD
35	T500 1000	1			SLEEVE
36	T302 7113	1			STUD

MODEL CODES
16=Cherokee 2 Dr.(1981-83)
17=Cherokee 2 Dr.(1981-83)
73=Cherokee 2WD-2 Dr.(1984-86)
74=Cherokee 2WD-4 Dr.(1984-86)
18=Cherokee 4 Dr.(1981-83)
77=Cherokee 4WD-2 Dr.(1984-86)
78=Cherokee 4WD-4 Dr.(1984-86)
85=CJ-5 (1981-83)
86=CJ-6(1981)
87=CJ-7(1981-86)
88=CJ-8, Scrambler(1981-86)
64=Comanche 2WD-6 Ft. Box(1986)
66=Comanche 2WD-7 Ft. Box(1986)
63=Comanche 4WD-6 Ft. Box(1986)
65=Comanche 4WD-7 Ft. Box(1986)
15=Grand Wagoneer 4 Dr.(1984-86)
25=J-10 Truck 7 Ft. Box(1981-84)
26=J10 Truck 8 Ft. Box(1981-86)
27=J-20 Truck 8 Ft. Box(1981-86)
15=Wagoneer 4 Dr.(1981-83)
75=Wagoneer 4WD-4 Dr.(1984-86)

BODY
CJ=CJ-5, CJ-6, CJ-7, CJ-8, Scrambler(1981-86)
MJ=Comanche Pickup(1986)

STYLES
SJ=Wagoneer(1981-83), Grand Wagoneer(1984-86), Cherokee(1981-83), J-10, J-20(1981-86)
XJ=Wagoneer(1984-86), Cherokee(1984-86)

AR = Use as Required - = Non Illustrated Part P.A.R. = Paint as Required

« RETURN TO GROUP INDEX

ENGINE OILING 1986 RENAULT DIESEL, EXPORT CJ-7,8
Figure 9A-1700

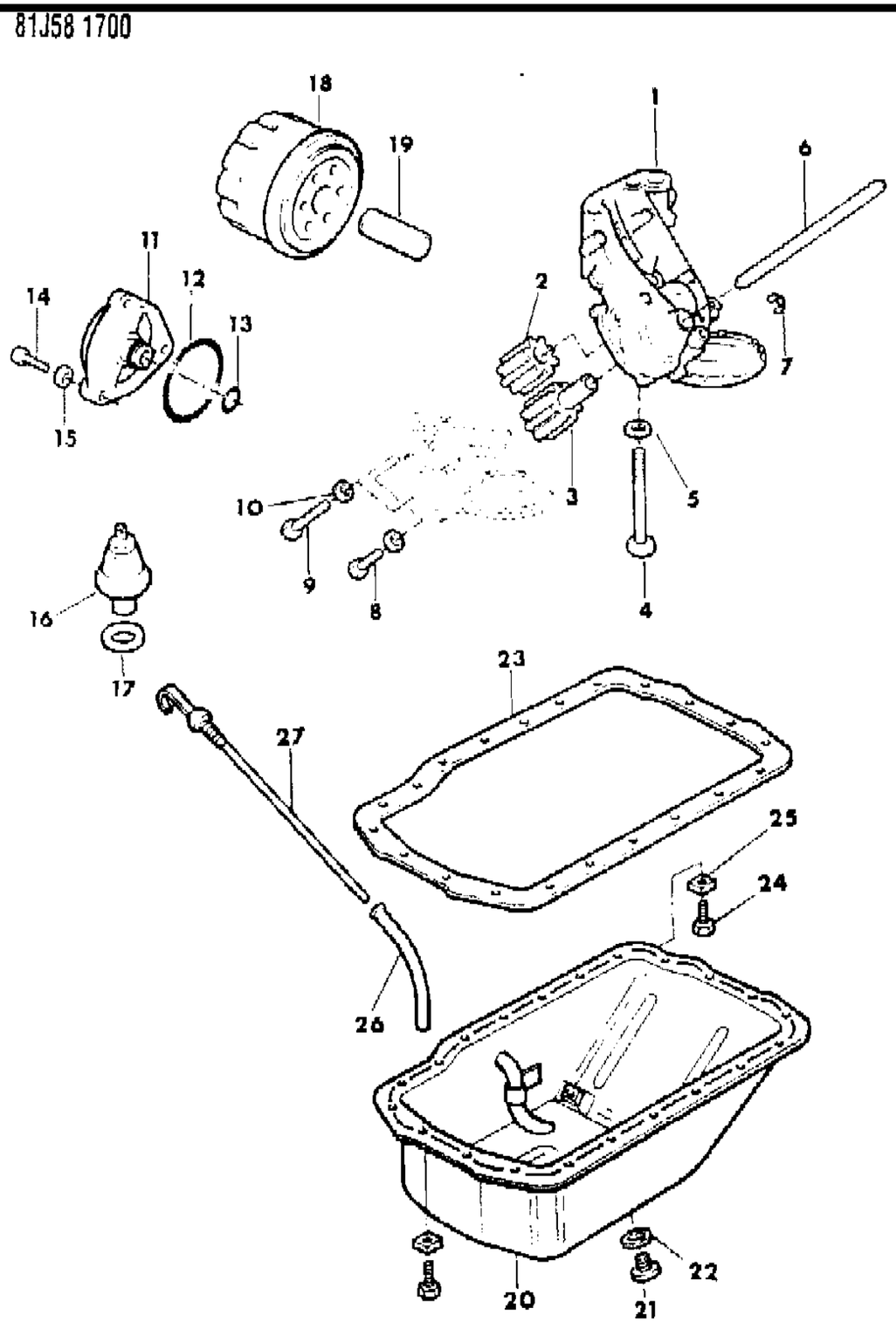

ITEM	PART NUMBER	QTY	BODY	MODEL	DESCRIPTION
1	T600 4571	1			PUMP, Engine Oil
2	T069 0232	1			GEAR, Oil Pump Driven
3	T068 3819	1			GEAR, Oil Pump Drive
4	T310 1057	2			BOLT
5	T140 2071	2			WASHER
6	T063 3922	1			SHAFT, Oil Pump Gear
7	T306 6231	1			CLIP
8	T300 1142	1			BOLT
9	T300 1123	1			BOLT
10	T140 2065	2			WASHER
11	T070 8281	1			HOUSING
12	T306 5090	1			SEAL
13	T306 5091	1			SEAL
14	T300 9085	1			BOLT
15	1150 0255	1			WASHER
16	T134 8032	1			SENSOR
17	T306 1028	1			GASKET
18	T073 0077	1			FILTER, Engine Oil
19	T066 4746	1			CONNECTOR
20	T159 7203	1			PAN, Engine Oil
21	T307 5152	1			PLUG
22	T777 7649	1			GASKET
23	T069 5923	1			GASKET, Pan
24	T149 3034	21			BOLT
25	T149 3072	21			WASHER
26	T072 5913	1			TUBE, Engine Oil Indicator
27	T071 3429	1			INDICATOR, Engine Oil Level

MODEL CODES

16=Cherokee 2 Dr.(1981-83)
17=Cherokee 2 Dr.(1981-83)
73=Cherokee 2WD-2 Dr.(1984-86)
74=Cherokee 2WD-4 Dr.(1984-86)
18=Cherokee 4 Dr.(1981-83)
77=Cherokee 4WD-2 Dr.(1984-86)
78=Cherokee 4WD-4 Dr.(1984-86)
85=CJ-5 (1981-83)
86=CJ-6(1981)
87=CJ-7(1981-86)
88=CJ-8, Scrambler(1981-86)
64=Comanche 2WD-6 Ft. Box(1986)
66=Comanche 2WD-7 Ft. Box(1986)
63=Comanche 4WD-6 Ft. Box(1986)
65=Comanche 4WD-7 Ft. Box(1986)
15=Grand Wagoneer 4 Dr.(1984-86)
25=J-10 Truck 7 Ft. Box(1981-84)
26=J10 Truck 8 Ft. Box(1981-86)
27=J-20 Truck 8 Ft. Box(1981-86)
15=Wagoneer 4 Dr.(1981-83)
75=Wagoneer 4WD-4 Dr.(1984-86)

BODY
CJ=CJ-5, CJ-6, CJ-7, CJ-8, Scrambler(1981-86)
MJ=Comanche Pickup(1986)

STYLES
SJ=Wagoneer(1981-83), Grand Wagoneer(1984-86), Cherokee(1981-83), J-10, J-20(1981-86)
XJ=Wagoneer(1984-86), Cherokee(1984-86)

AR = Use as Required - = Non Illustrated Part P.A.R. = Paint as Required

« RETURN TO GROUP INDEX

MANIFOLD, INTAKE AND EXHAUST 1986 RENAULT DIESEL, EXPORT CJ-7,8
Figure 9A-1800

81J58 1800

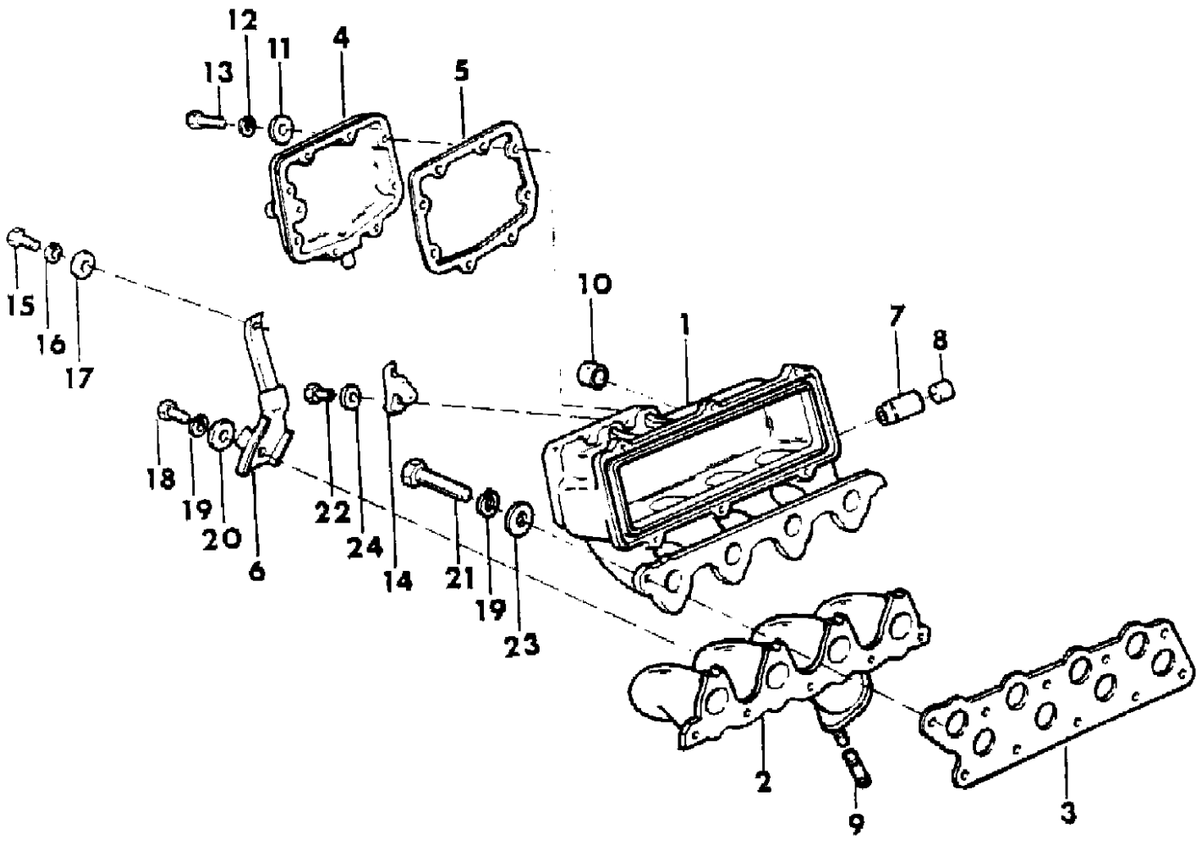

ITEM	PART NUMBER	QTY	BODY	MODEL	DESCRIPTION
1	T069 8506	1			MANIFOLD, Intake
2	T600 9664	1			MANIFOLD, Exhaust
3	T134 8923	1			GASKET
4	T068 6330	1			COVER
5	T068 6328	1			GASKET
6	T067 3056	1			BRACKET
7	T014 3000	1			SLEEVE
8	T065 7697	1			CAP
9	T302 7159	2			STUD
10	T307 5095	1			PLUG
11	T305 3032	8			WASHER, Plain
12	T140 2091	8			WASHER, Lock
13	T300 1127	8			BOLT
14	T069 8583	1			DUCT
15	T300 1201	1			BOLT
16	T305 5015	1			WASHER, Lock
17	T305 3077	1			WASHER, Plain
18	T300 1498	5			BOLT
19	T140 2093	5			WASHER, Lock
20	T305 3043	5			WASHER, Plain
21	T069 8376	5			BOLT
22	T149 3025	1			BOLT
23	T305 3037	5			WASHER
24	T305 7013	1			WASHER

MODEL CODES

16=Cherokee 2 Dr.(1981-83)
17=Cherokee 2 Dr.(1981-83)
73=Cherokee 2WD-2 Dr.(1984-86)
74=Cherokee 2WD-4 Dr.(1984-86)
18=Cherokee 4 Dr.(1981-83)
77=Cherokee 4WD-2 Dr.(1984-86)
78=Cherokee 4WD-4 Dr.(1984-86)
85=CJ-5 (1981-83)
86=CJ-6(1981)
87=CJ-7(1981-86)
88=CJ-8, Scrambler(1981-86)
64=Comanche 2WD-6 Ft. Box(1986)
66=Comanche 2WD-7 Ft. Box(1986)
63=Comanche 4WD-6 Ft. Box(1986)
65=Comanche 4WD-7 Ft. Box(1986)
15=Grand Wagoneer 4 Dr.(1984-86)
25=J-10 Truck 7 Ft. Box(1981-84)
26=J10 Truck 8 Ft. Box(1981-86)
27=J-20 Truck 8 Ft. Box(1981-86)
15=Wagoneer 4 Dr.(1981-83)
75=Wagoneer 4WD-4 Dr.(1984-86)

BODY
CJ=CJ-5, CJ-6, CJ-7, CJ-8, Scrambler(1981-86)
MJ=Comanche Pickup(1986)

STYLES
SJ=Wagoneer(1981-83), Grand Wagoneer(1984-86), Cherokee(1981-83), J-10, J-20(1981-86)
XJ=Wagoneer(1984-86), Cherokee(1984-86)

AR = Use as Required - = Non Illustrated Part P.A.R. = Paint as Required

« RETURN TO GROUP INDEX

ENGINE BREATHER SYSTEM 1986 RENAULT DIESEL, EXPORT CJ-7,8
Figure 9A-1900

81J58 1900

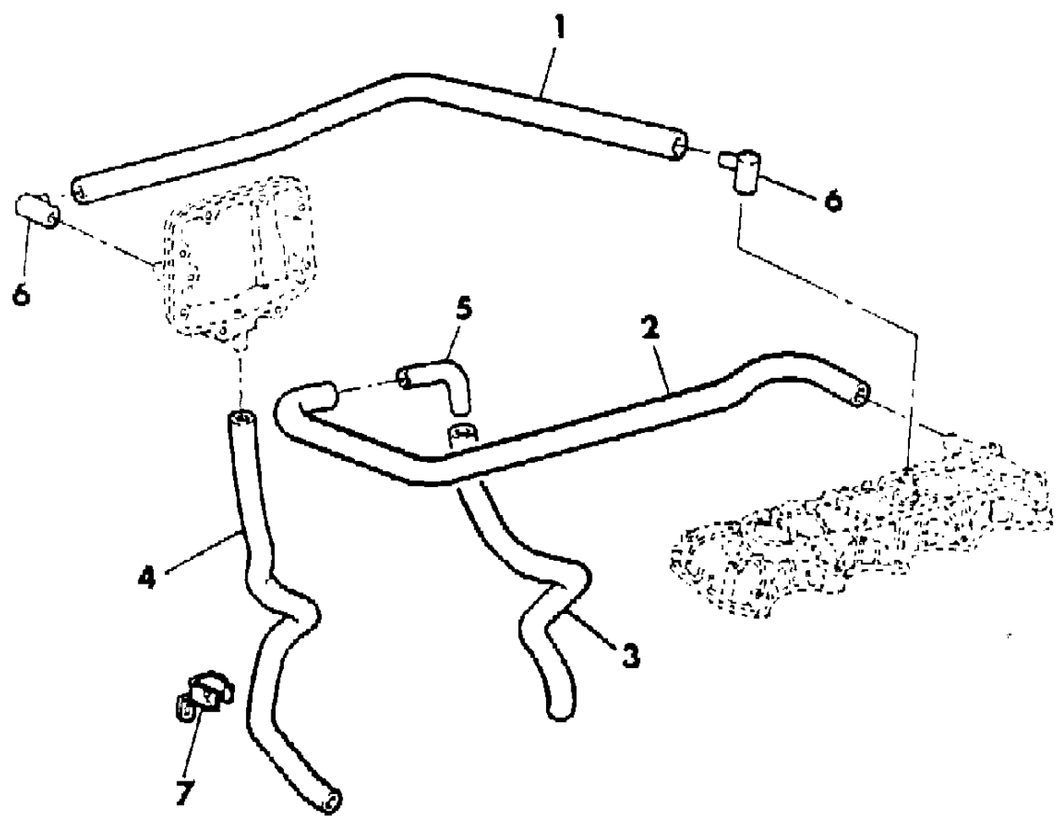

ITEM	PART NUMBER	QTY	BODY	MODEL	DESCRIPTION
1	T070 6300	AR			HOSE, Engine Breather Breather Cover to Cylinder Head Cover, Bulk-Order in Feet
2	T070 4927	1			HOSE, Engine Breather, Cylinder Head Cover to Connector
3	T071 9694	1			HOSE, Engine Breather, Connector to Crankcase
4	T070 8313	1			HOSE, Engine Breather, Breather Cover to Oil Pan
5	T071 7326	1			CONNECTOR, Engine Breather Hose
6	J503 0051	2			ADAPTER, Engine Breather Hose
7	T307 8087	1			BRACKET, Engine Breather Hose Support

MODEL CODES

16=Cherokee 2 Dr.(1981-83)
17=Cherokee 2 Dr.(1981-83)
73=Cherokee 2WD-2 Dr.(1984-86)
74=Cherokee 2WD-4 Dr.(1984-86)
18=Cherokee 4 Dr.(1981-83)
77=Cherokee 4WD-2 Dr.(1984-86)
78=Cherokee 4WD-4 Dr.(1984-86)
85=CJ-5 (1981-83)
86=CJ-6(1981)
87=CJ-7(1981-86)
88=CJ-8, Scrambler(1981-86)
64=Comanche 2WD-6 Ft. Box(1986)
66=Comanche 2WD-7 Ft. Box(1986)
63=Comanche 4WD-6 Ft. Box(1986)
65=Comanche 4WD-7 Ft. Box(1986)
15=Grand Wagoneer 4 Dr.(1984-86)
25=J-10 Truck 7 Ft. Box(1981-84)
26=J10 Truck 8 Ft. Box(1981-86)
27=J-20 Truck 8 Ft. Box(1981-86)
15=Wagoneer 4 Dr.(1981-83)
75=Wagoneer 4WD-4 Dr.(1984-86)

BODY
CJ=CJ-5, CJ-6, CJ-7, CJ-8, Scrambler(1981-86)
MJ=Comanche Pickup(1986)

STYLES
SJ=Wagoneer(1981-83), Grand Wagoneer(1984-86), Cherokee(1981-83), J-10, J-20(1981-86)
XJ=Wagoneer(1984-86), Cherokee(1984-86)

AR = Use as Required - = Non Illustrated Part P.A.R. = Paint as Required

« RETURN TO GROUP INDEX

ENGINE MOUNTING 1986 RENAULT DIESEL, EXPORT CJ-7,8
Figure 9A-2000

81J58 2000

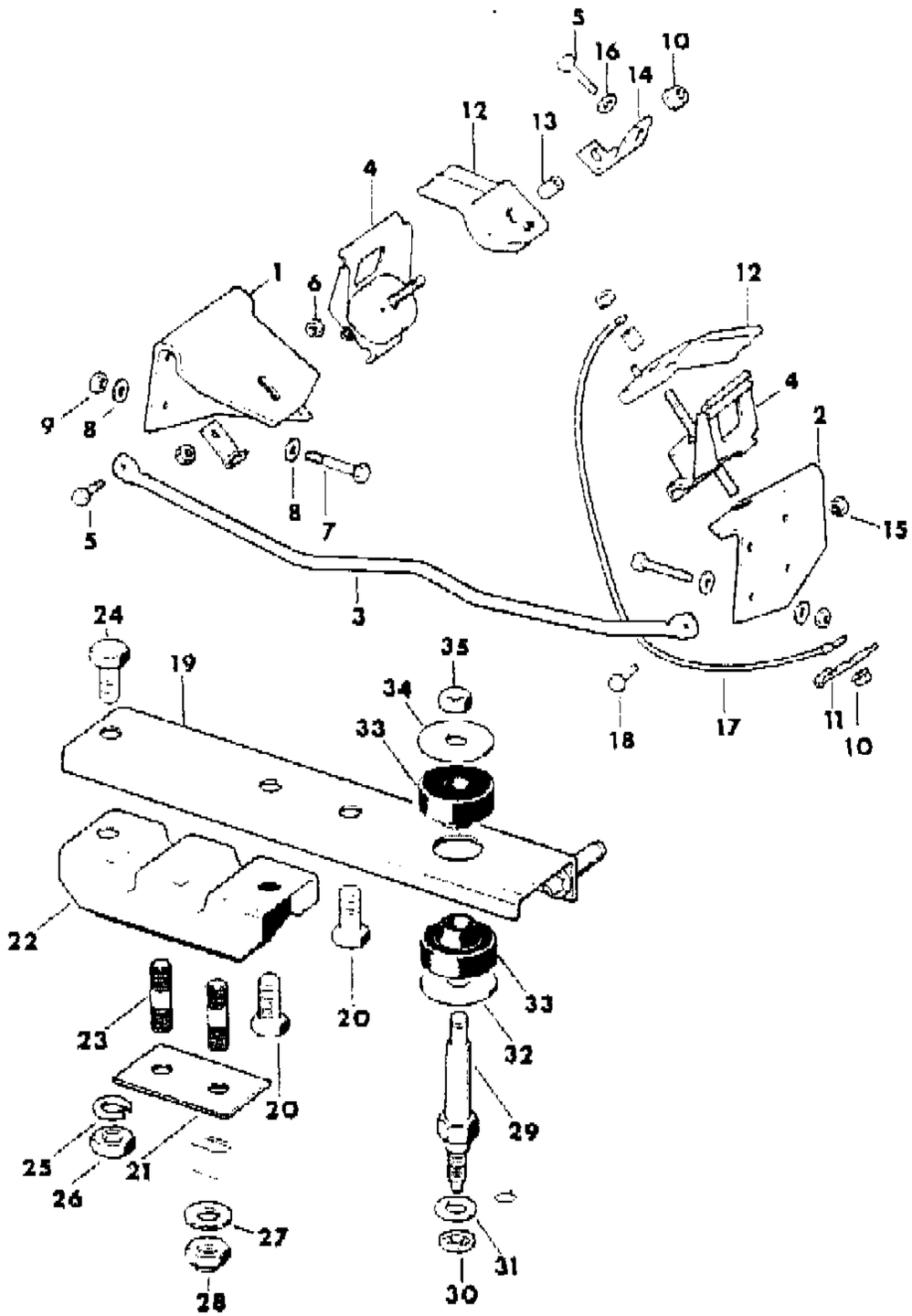

ITEM	PART NUMBER	QTY	BODY	MODEL	DESCRIPTION
1	J536 4536	1			BRACKET, Right
2	J536 4535	1			BRACKET, Left
3	J536 4539	1			BAR, Tie
4	J536 4591	2			MOUNT, Engine ***
5	J018 0123	1			BOLT
6	J400 4008	1			NUT
7	S942 5367	2			BOLT
8	T305 3043	2			WASHER
9	J941 1783	AR			NUT
10	J400 4005	AR			NUT
11	J536 4604	1			PLATE
12	J536 4599	2			BRACKET
13	J400 7097	2			SPACER
14	J536 4592	1			BRACKET
15	J400 4008	1			NUT
16	T305 3045	1			WASHER
17	T094 6861	1			CABLE
18	J400 7221	1			BOLT
19	J536 1157	1			BRACKET
20	J400 6110	2			BOLT
21	J536 1885	1			SPACER
22	J137 0910	1			INSULATOR
23	J400 4819	2			STUD
24	J018 0145	1			BOLT
25	J012 0383	1			WASHER
26	J027 1501	1			NUT
27	J400 1120	2			WASHER
28	J941 3215	2			NUT
29	J535 8879	1			STUD
30	J941 1783	1			NUT
31	J400 1134	1			WASHER
32	J094 1399	1			WASHER
33	J094 5266	2			INSULATOR
34	J094 5269	1			WASHER
35	J941 1783	1			NUT

MODEL CODES
16=Cherokee 2 Dr.(1981-83)
17=Cherokee 2 Dr.(1981-83)
73=Cherokee 2WD-2 Dr.(1984-86)
74=Cherokee 2WD-4 Dr.(1984-86)
18=Cherokee 4 Dr.(1981-83)
77=Cherokee 4WD-2 Dr.(1984-86)
78=Cherokee 4WD-4 Dr.(1984-86)
85=CJ-5 (1981-83)
86=CJ-6(1981)
87=CJ-7(1981-86)
88=CJ-8, Scrambler(1981-86)
64=Comanche 2WD-6 Ft. Box(1986)
66=Comanche 2WD-7 Ft. Box(1986)
63=Comanche 4WD-6 Ft. Box(1986)
65=Comanche 4WD-7 Ft. Box(1986)
15=Grand Wagoneer 4 Dr.(1984-86)
25=J-10 Truck 7 Ft. Box(1981-84)
26=J10 Truck 8 Ft. Box(1981-86)
27=J-20 Truck 8 Ft. Box(1981-86)
15=Wagoneer 4 Dr.(1981-83)
75=Wagoneer 4WD-4 Dr.(1984-86)

BODY
CJ=CJ-5, CJ-6, CJ-7, CJ-8, Scrambler(1981-86)
MJ=Comanche Pickup(1986)

STYLES
SJ=Wagoneer(1981-83), Grand Wagoneer(1984-86), Cherokee(1981-83), J-10, J-20(1981-86)
XJ=Wagoneer(1984-86), Cherokee(1984-86)

AR = Use as Required - = Non Illustrated Part P.A.R. = Paint as Required

« RETURN TO GROUP INDEX

BLOCK, ENGINE 1981-83 GM FOUR CYLINDER CJ-5,6,7,8, SCRAMBLER
Figure 9A-2100

81J58 2100

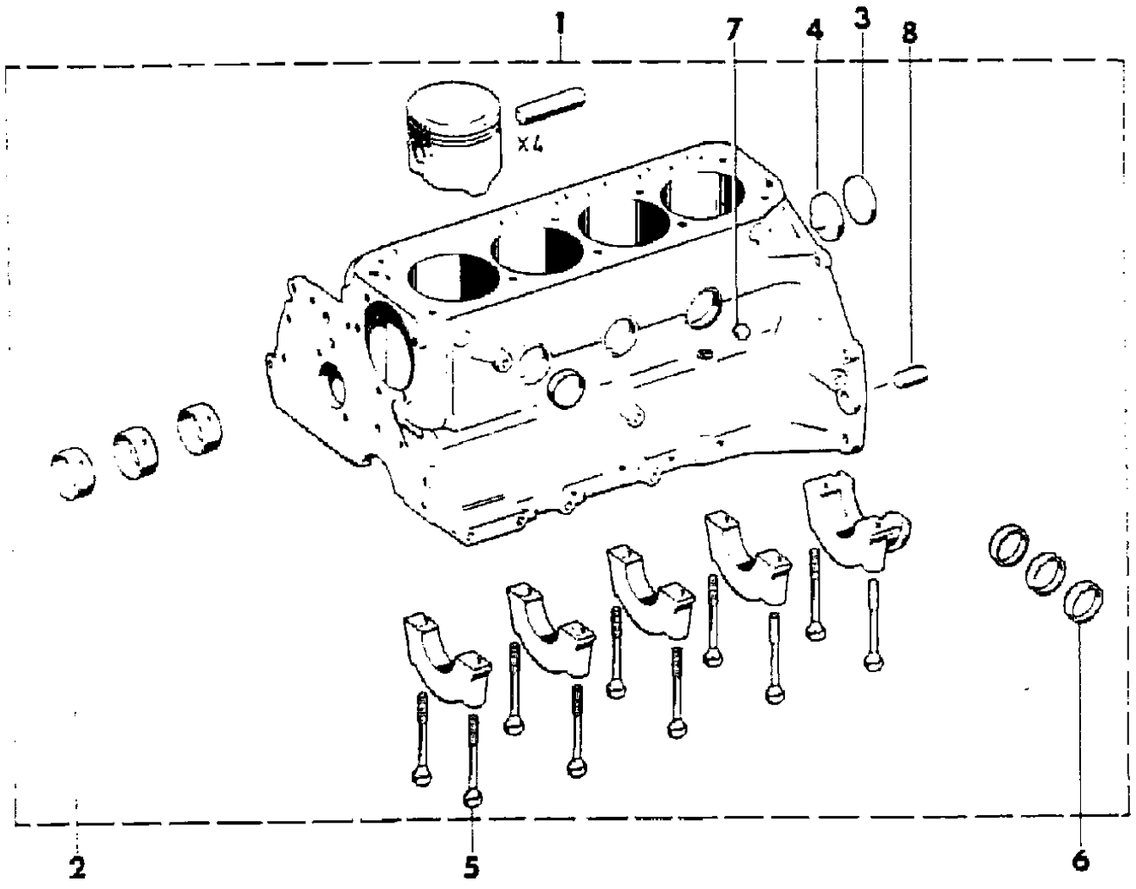

ITEM	PART NUMBER	QTY	BODY	MODEL	DESCRIPTION
1					BLOCK, Engine, With Fitted Pistons
	J813 3751	1			1981 ****
	J813 3991	1			1982-83
2	J813 2251	3			BEARING, Camshaft
3	J813 2252	1			PLUG
4	J813 2204	1			PLUG
5	J813 2208	1			BOLT
	J813 2209	9			BOLT
6					PLUG
	J813 2207	3			41.5mm Diameter
	S942 7693	1			.62mm Diameter
7	J044 4618	1			PLUG
8	J813 2269	2			PIN

MODEL CODES

16=Cherokee 2 Dr.(1981-83)
17=Cherokee 2 Dr.(1981-83)
73=Cherokee 2WD-2 Dr.(1984-86)
74=Cherokee 2WD-4 Dr.(1984-86)
18=Cherokee 4 Dr.(1981-83)
77=Cherokee 4WD-2 Dr.(1984-86)
78=Cherokee 4WD-4 Dr.(1984-86)
85=CJ-5 (1981-83)
86=CJ-6(1981)
87=CJ-7(1981-86)
88=CJ-8, Scrambler(1981-86)
64=Comanche 2WD-6 Ft. Box(1986)
66=Comanche 2WD-7 Ft. Box(1986)
63=Comanche 4WD-6 Ft. Box(1986)
65=Comanche 4WD-7 Ft. Box(1986)
15=Grand Wagoneer 4 Dr.(1984-86)
25=J-10 Truck 7 Ft. Box(1981-84)
26=J10 Truck 8 Ft. Box(1981-86)
27=J-20 Truck 8 Ft. Box(1981-86)
15=Wagoneer 4 Dr.(1981-83)
75=Wagoneer 4WD-4 Dr.(1984-86)

BODY

CJ=CJ-5, CJ-6, CJ-7, CJ-8, Scrambler(1981-86)
MJ=Comanche Pickup(1986)

STYLES

SJ=Wagoneer(1981-83), Grand Wagoneer(1984-86), Cherokee(1981-83), J-10, J-20(1981-86)
XJ=Wagoneer(1984-86), Cherokee(1984-86)

AR = Use as Required - = Non Illustrated Part P.A.R. = Paint as Required

« RETURN TO GROUP INDEX

GASKET SET 1981-83 GM FOUR CYLINDER CJ-5,6,7,8, SCRAMBLER
Figure 9A-2200

81J58 2200

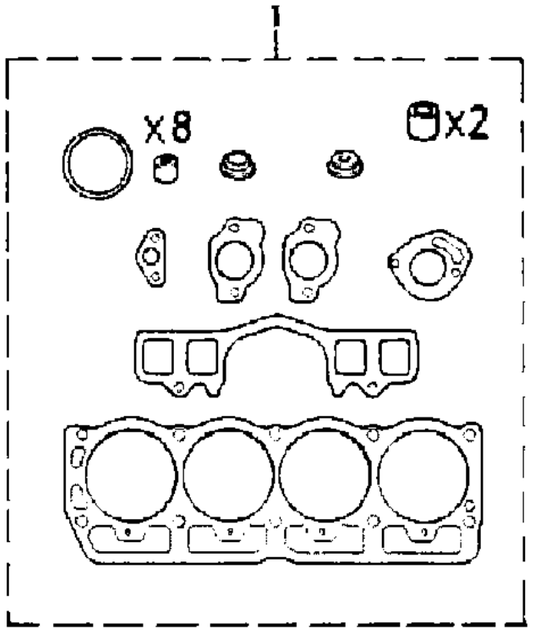

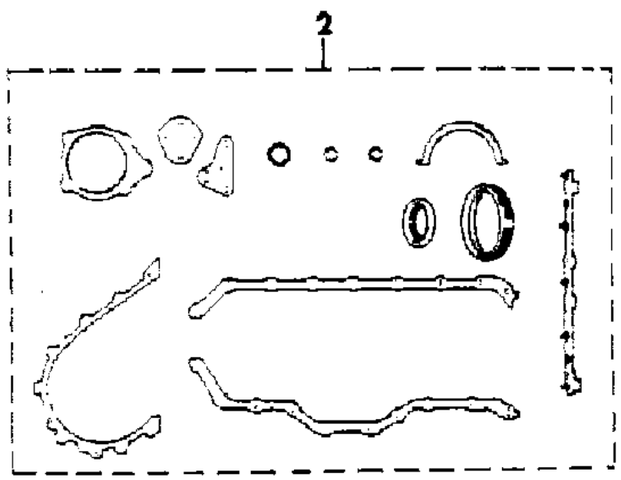

ITEM	PART NUMBER	QTY	BODY	MODEL	DESCRIPTION
1					GASKET PACKAGE, Engine Upper
	J813 2203	1			1981
	J813 4134	1			1982
	J813 4689	1			1983
2					GASKET PACKAGE, Engine Lower
	J813 2202	1			1981
	J813 4322	1			1982
	J813 4688	1			1983

MODEL CODES

16=Cherokee 2 Dr.(1981-83)
17=Cherokee 2 Dr.(1981-83)
73=Cherokee 2WD-2 Dr.(1984-86)
74=Cherokee 2WD-4 Dr.(1984-86)
18=Cherokee 4 Dr.(1981-83)
77=Cherokee 4WD-2 Dr.(1984-86)
78=Cherokee 4WD-4 Dr.(1984-86)
85=CJ-5 (1981-83)
86=CJ-6(1981)
87=CJ-7(1981-86)
88=CJ-8, Scrambler(1981-86)
64=Comanche 2WD-6 Ft. Box(1986)
66=Comanche 2WD-7 Ft. Box(1986)
63=Comanche 4WD-6 Ft. Box(1986)
65=Comanche 4WD-7 Ft. Box(1986)
15=Grand Wagoneer 4 Dr.(1984-86)
25=J-10 Truck 7 Ft. Box(1981-84)
26=J10 Truck 8 Ft. Box(1981-86)
27=J-20 Truck 8 Ft. Box(1981-86)
15=Wagoneer 4 Dr.(1981-83)
75=Wagoneer 4WD-4 Dr.(1984-86)

BODY
CJ=CJ-5, CJ-6, CJ-7, CJ-8, Scrambler(1981-86)
MJ=Comanche Pickup(1986)

STYLES
SJ=Wagoneer(1981-83), Grand Wagoneer(1984-86), Cherokee(1981-83), J-10, J-20(1981-86)
XJ=Wagoneer(1984-86), Cherokee(1984-86)

AR = Use as Required - = Non Illustrated Part P.A.R. = Paint as Required

« RETURN TO GROUP INDEX

CYLINDER HEAD 1981-83 GM FOUR CYLINDER CJ-5,6,7,8, SCRAMBLER
Figure 9A-2300

81J58 2300

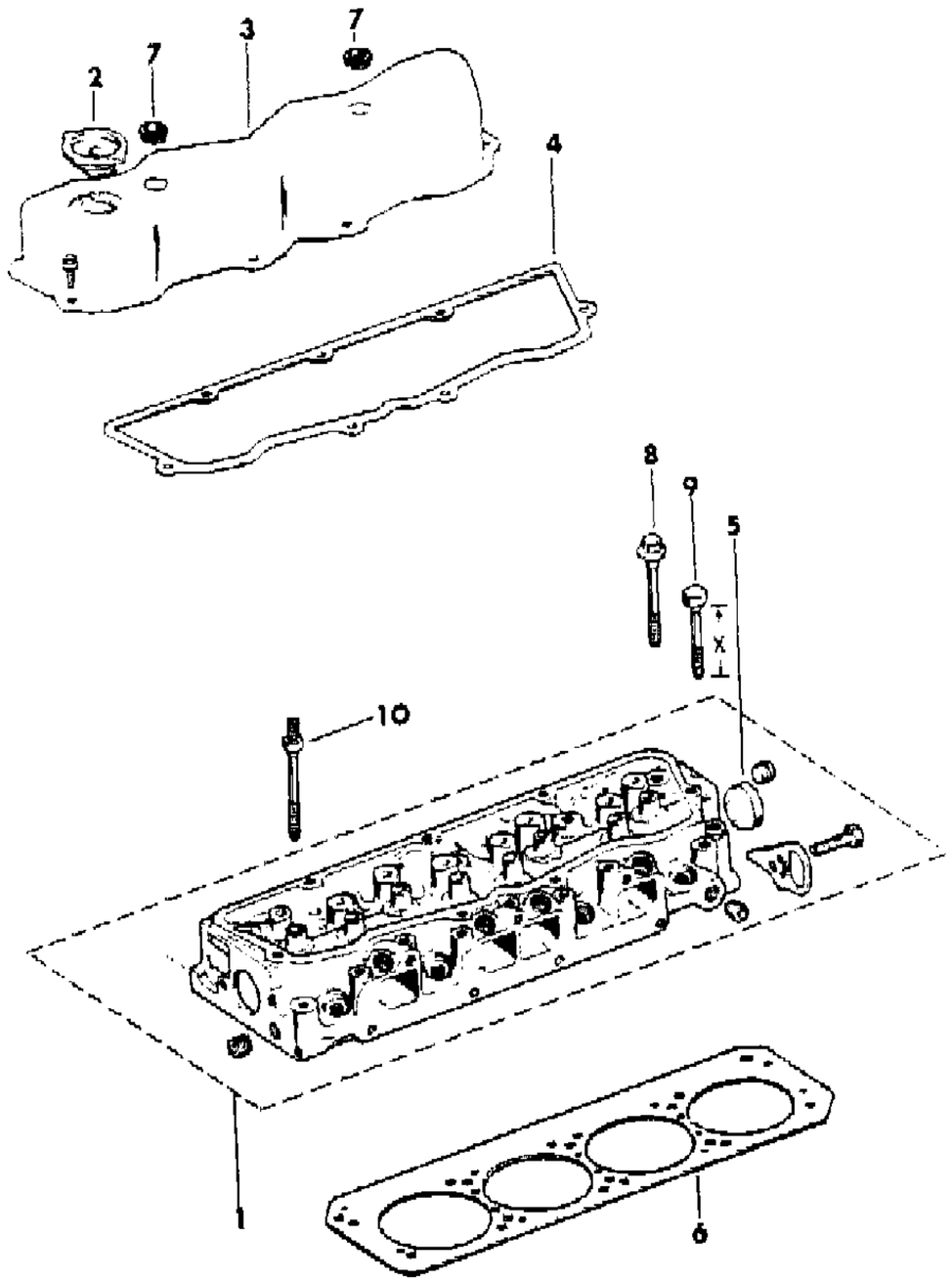

ITEM	PART NUMBER	QTY	BODY	MODEL	DESCRIPTION
1	J813 3706	1			HEAD, Engine Cylinder
2					CAP
	J813 2312	1			1981
	J813 4401	1			1982-83
3	J813 2236	1			COVER, Cylinder Head
4	J813 2811	1			GASKET, Cylinder Head Cover
5	J813 2226	1			PLUG
6					GASKET
	J813 2222	1			1981
	J813 3701	1			1982-83
7					GROMMET
	J813 2310	2			1981
	J813 4410	2			1982-83
8					BOLT
	J813 2225	8			1981
	J813 3405	8			1982-83
9					BOLT
	J813 3671	8			1981: x=100mm
	J813 2209	8			1981-83: x=70mm
10	J813 2208	1			BOLT, Stud

MODEL CODES

16=Cherokee 2 Dr.(1981-83)
17=Cherokee 2 Dr.(1981-83)
73=Cherokee 2WD-2 Dr.(1984-86)
74=Cherokee 2WD-4 Dr.(1984-86)
18=Cherokee 4 Dr.(1981-83)
77=Cherokee 4WD-2 Dr.(1984-86)
78=Cherokee 4WD-4 Dr.(1984-86)
85=CJ-5 (1981-83)
86=CJ-6(1981)
87=CJ-7(1981-86)
88=CJ-8, Scrambler(1981-86)
64=Comanche 2WD-6 Ft. Box(1986)
66=Comanche 2WD-7 Ft. Box(1986)
63=Comanche 4WD-6 Ft. Box(1986)
65=Comanche 4WD-7 Ft. Box(1986)
15=Grand Wagoneer 4 Dr.(1984-86)
25=J-10 Truck 7 Ft. Box(1981-84)
26=J10 Truck 8 Ft. Box(1981-86)
27=J-20 Truck 8 Ft. Box(1981-86)
15=Wagoneer 4 Dr.(1981-83)
75=Wagoneer 4WD-4 Dr.(1984-86)

BODY
CJ=CJ-5, CJ-6, CJ-7, CJ-8, Scrambler(1981-86)
MJ=Comanche Pickup(1986)

STYLES
SJ=Wagoneer(1981-83), Grand Wagoneer(1984-86), Cherokee(1981-83), J-10, J-20(1981-86)
XJ=Wagoneer(1984-86), Cherokee(1984-86)

AR = Use as Required - = Non Illustrated Part P.A.R. = Paint as Required

« RETURN TO GROUP INDEX

CRANKSHAFT, FLYWHEEL AND PISTON 1981-83 GM FOUR CYLINDER CJ-5,6,7,8, SCRAMBLER
Figure 9A-2400

81J58 2400

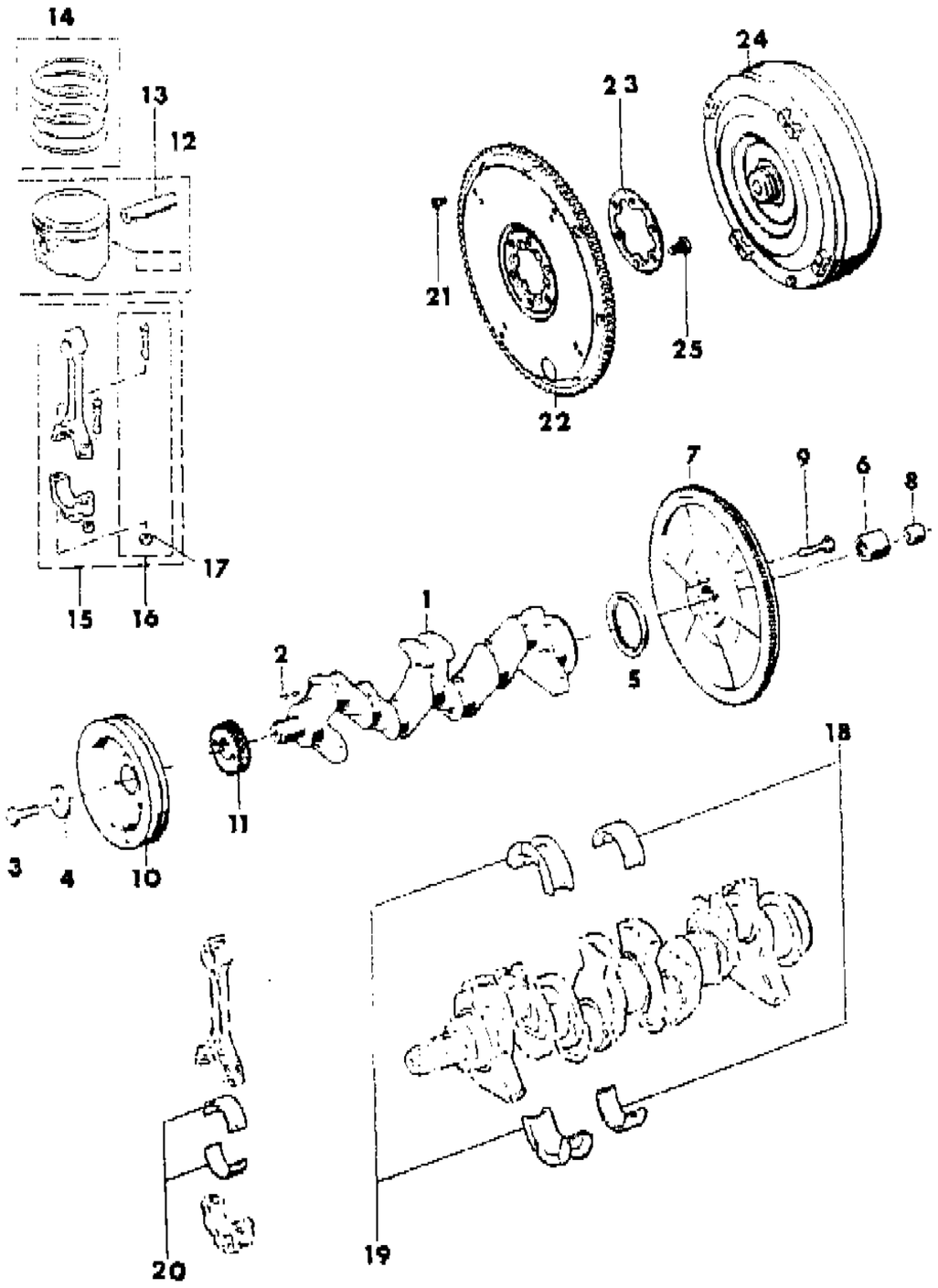

ITEM	PART NUMBER	QTY	BODY	MODEL	DESCRIPTION
1	J813 1280	1			CRANKSHAFT
2	S012 4549	2			KEY, Shaft
3	S150 1751	1			BOLT
4	J813 2266	1			WASHER
5	J813 2218	1			SEAL
6	J323 7088	1			BUSHING, With Automatic Transmission
7	J813 2267	1			FLYWHEEL, With Manual Transmission
8	J813 2261	1			BUSHING, With Manual Transmission
9	J813 2268	6			BOLT, With Manual Transmission
10	J813 2264	1			DAMPER
11	J813 2270	1			SPROCKET, Crankshaft
12					PISTON PACKAGE ***
					1981: Coded 10012045
	J813 2448	4			Standard
	J813 3160	4			+.005"
	J813 2449	4			+.010"
					1981: Coded 10016666
	J813 3673	4			Standard
	J813 3676	4			+.005"
	J813 3674	4			+.010"
					1981: Coded 10010698
	J813 2450	4			+.030"
					1981: Coded 10016671
	J813 3675	4			+.030"
					1982-83
	J813 4136	4			Standard
	J813 4139	4			+.005"
	J813 4137	4			+.010"
	J813 4138	4			+.030"
13					PIN, Piston
	J813 2258	4			1981-83: +.001"
	J813 2259	4			1981-83: +.003"
14					RING PACKAGE, Piston
					1981: Coded 10012045
	J813 2451	4			Standard
	J813 3161	4			+.005"
	J813 2452	4			+.010"
					1981: Coded 10016666
	J813 3406	4			Standard

MODEL CODES

16=Cherokee 2 Dr.(1981-83)	78=Cherokee 4WD-4 Dr.(1984-86)	64=Comanche 2WD-6 Ft. Box(1986)	25=J-10 Truck 7 Ft. Box(1981-84)
17=Cherokee 2 Dr.(1981-83)	85=CJ-5 (1981-83)	66=Comanche 2WD-7 Ft. Box(1986)	26=J10 Truck 8 Ft. Box(1981-86)
73=Cherokee 2WD-2 Dr.(1984-86)	86=CJ-6(1981)	63=Comanche 4WD-6 Ft. Box(1986)	27=J-20 Truck 8 Ft. Box(1981-86)
74=Cherokee 2WD-4 Dr.(1984-86)	87=CJ-7(1981-86)	65=Comanche 4WD-7 Ft. Box(1986)	15=Wagoneer 4 Dr.(1981-83)
18=Cherokee 4 Dr.(1981-83)	88=CJ-8, Scrambler(1981-86)	15=Grand Wagoneer 4 Dr.(1984-86)	75=Wagoneer 4WD-4 Dr.(1984-86)
77=Cherokee 4WD-2 Dr.(1984-86)			

BODY
CJ=CJ-5, CJ-6, CJ-7, CJ-8, Scrambler(1981-86)
MJ=Comanche Pickup(1986)

STYLES
SJ=Wagoneer(1981-83), Grand Wagoneer(1984-86), Cherokee(1981-83), J-10, J-20(1981-86)
XJ=Wagoneer(1984-86), Cherokee(1984-86)

AR = Use as Required - = Non Illustrated Part P.A.R. = Paint as Required

« RETURN TO GROUP INDEX »

CRANKSHAFT, FLYWHEEL AND PISTON 1981-83 GM FOUR CYLINDER CJ-5,6,7,8, SCRAMBLER
Figure 9A-2400

81J58 2400

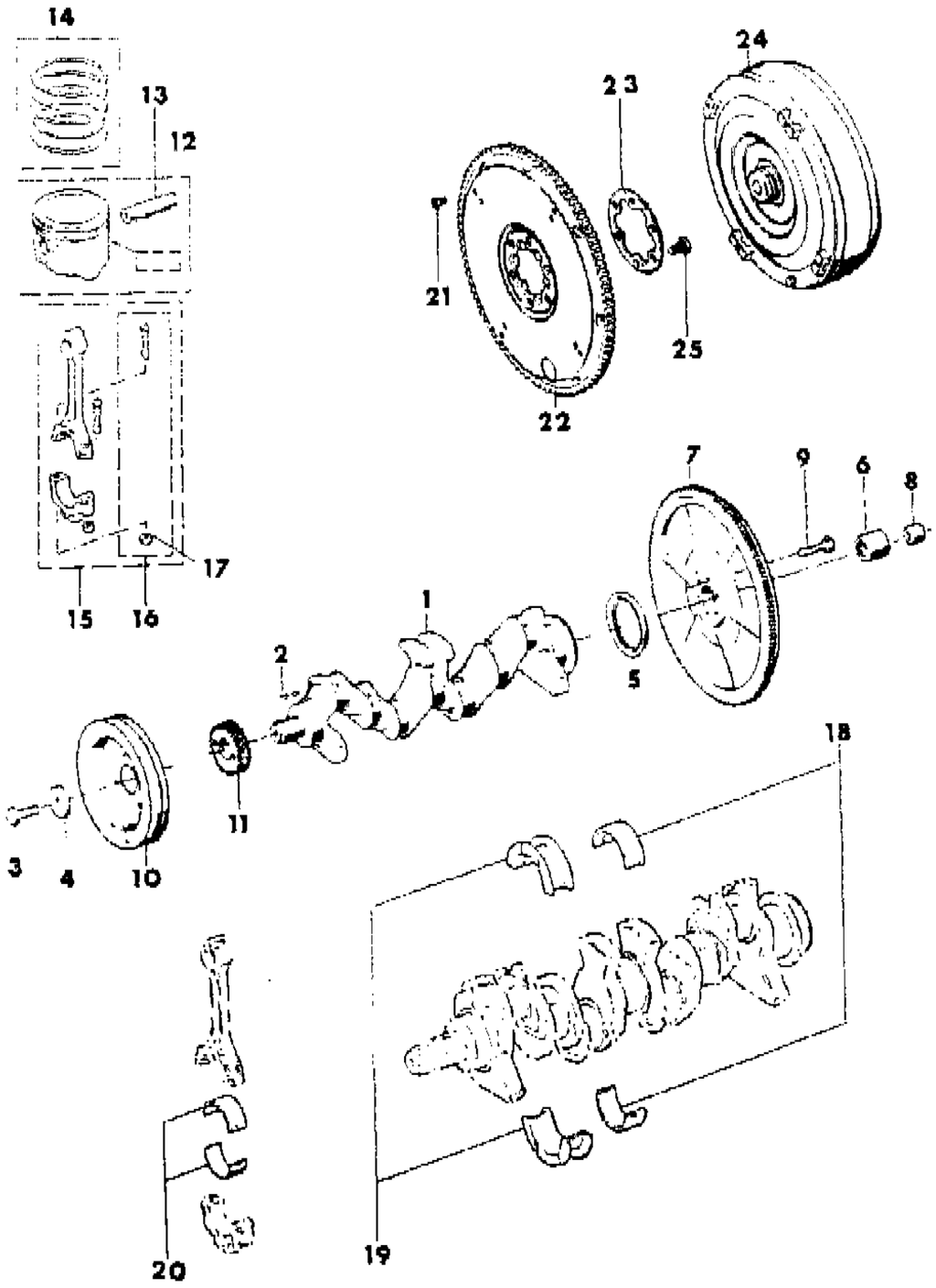

ITEM	PART NUMBER	QTY	BODY	MODEL	DESCRIPTION
	J813 3407	4			+.005"
	J813 3408	4			+.010"
					1981: Coded 10010698
	J813 2453	4			+.030"
					1981: Coded 10016671
	J813 3409	4			+.030"
					1982-83
	J813 4140	4			Standard
	J813 4141	4			+.005"
	J813 4142	4			+.010"
	J813 4143	4			+.030"
15	J813 2253	4			1983-83: ROD, Connecting ***
16	J813 2635	8			1981-83: BOLT PACKAGE ***
17	J813 2257	8			1981-83: NUT ***
18					BEARING PACKAGE
	J813 2210	4			Standard
	J813 2211	4			-.001"
	J813 2212	4			-.002"
	J813 2213	4			-.010"
19					BEARING PACKAGE
	J813 2214	1			Standard
	J813 2215	1			-.001"
	J813 2216	1			-.002"
	J813 2217	1			-.010"
20					BEARING PACKAGE
	J813 2255	4			Standard
	J813 3438	4			-.001"
	J813 3439	4			-.002"
	J813 2254	4			-.010"
21	J420 0412	4			BOLT
22	J813 2463	1			PLATE, Converter Drive
23	J325 1288	1			REINFORCEMENT
24	J323 4294	1			CONVERTER
25	J420 0088	6			BOLT

MODEL CODES

16=Cherokee 2 Dr.(1981-83)	78=Cherokee 4WD-4 Dr.(1984-86)	64=Comanche 2WD-6 Ft. Box(1986)	25=J-10 Truck 7 Ft. Box(1981-84)
17=Cherokee 2 Dr.(1981-83)	85=CJ-5 (1981-83)	66=Comanche 2WD-7 Ft. Box(1986)	26=J10 Truck 8 Ft. Box(1981-86)
73=Cherokee 2WD-2 Dr.(1984-86)	86=CJ-6(1981)	63=Comanche 4WD-6 Ft. Box(1986)	27=J-20 Truck 8 Ft. Box(1981-86)
74=Cherokee 2WD-4 Dr.(1984-86)	87=CJ-7(1981-86)	65=Comanche 4WD-7 Ft. Box(1986)	15=Wagoneer 4 Dr.(1981-83)
18=Cherokee 4 Dr.(1981-83)	88=CJ-8, Scrambler(1981-86)	15=Grand Wagoneer 4 Dr.(1984-86)	75=Wagoneer 4WD-4 Dr.(1984-86)
77=Cherokee 4WD-2 Dr.(1984-86)			

BODY
CJ=CJ-5, CJ-6, CJ-7, CJ-8, Scrambler(1981-86)
MJ=Comanche Pickup(1986)

STYLES
SJ=Wagoneer(1981-83), Grand Wagoneer(1984-86), Cherokee(1981-83), J-10, J-20(1981-86)
XJ=Wagoneer(1984-86), Cherokee(1984-86)

AR = Use as Required - = Non Illustrated Part P.A.R. = Paint as Required

« RETURN TO GROUP INDEX

CAMSHAFT AND VALVES 1981-83 GM FOUR CYLINDER CJ-5,6,7,8, SCRAMBLER
Figure 9A-2500

81J58 2500

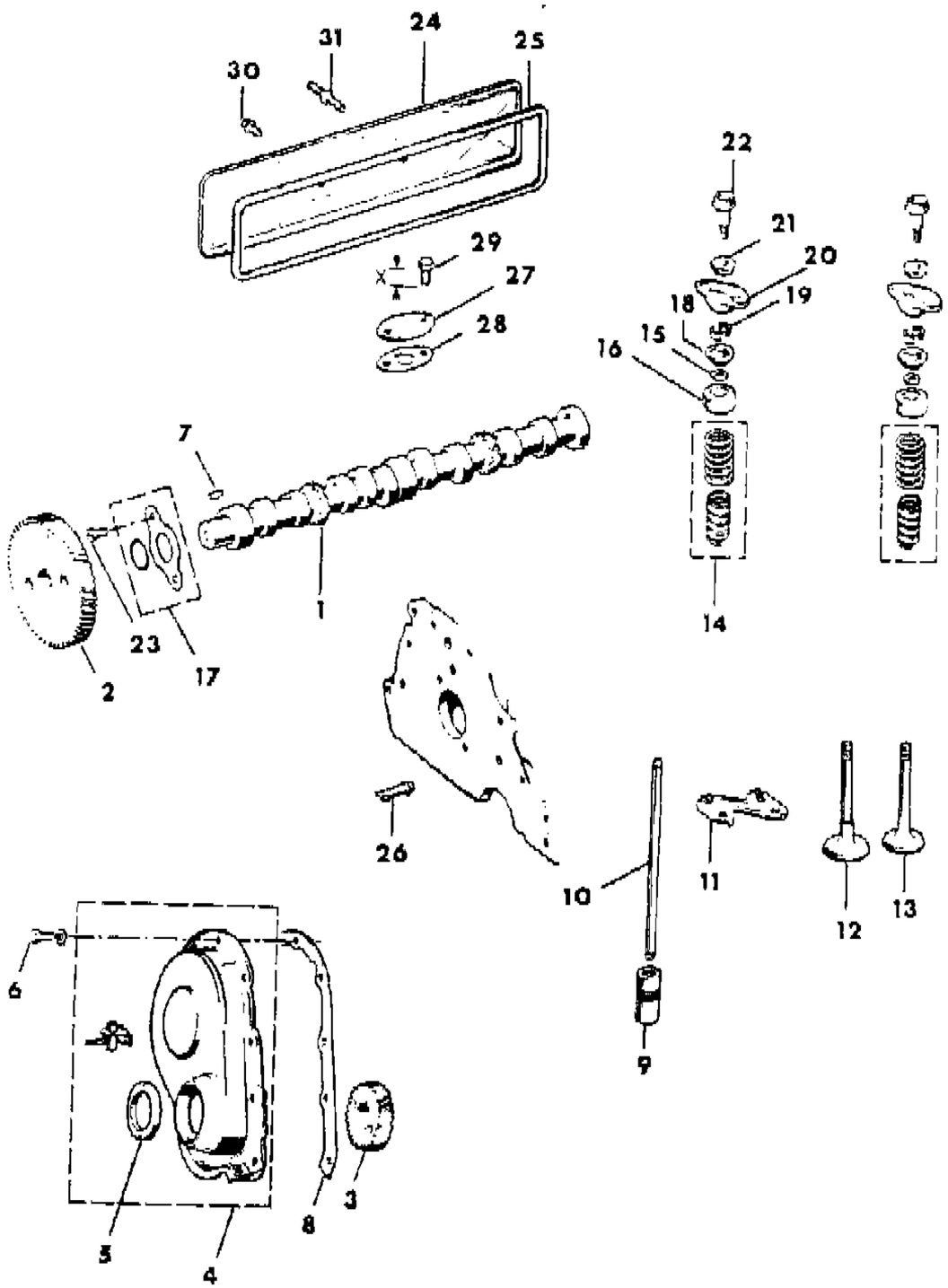

ITEM	PART NUMBER	QTY	BODY	MODEL	DESCRIPTION
1	J813 2249	1			CAMSHAFT
2	J813 2271	1			SPROCKET, Camshaft
3	J813 2270	1			SPROCKET, Camshaft
4	J813 2219	1			COVER, Timing Case
5					SEAL
	J813 2221	1			1981
	J813 3748	1			1982-83
6	1150 3803	8			BOLT
7	S012 4549	1			KEY
8					GASKET
	J813 2220	1			1981
	J813 3747	1			1982-83
9	J813 2248	8			TAPPET
10					PUSH ROD
	J813 2237	8			1981
	J813 4133	8			1982-83
11					PLATE, Guide
	J813 2773	1			Cylinder No. 1
	J813 2774	1			Cylinder No. 2
	J813 2775	1			Cylinder No. 3
	J813 2776	1			Cylinder No. 4
12					VALVE, Intake
					1981
	J813 2227	4			Standard
	J813 2228	4			+.08mm
	J813 2443	4			+.13mm
					1982-83
	J813 4389	4			Standard
	J813 4390	4			+.08mm
	J813 4391	4			+.13mm
13					VALVE, Exhaust
					1981
	J813 2229	4			Standard
	J813 2230	4			+.08mm
	J813 2444	4			+.13mm
					1982-83
	J813 4392	4			Standard
	J813 4393	4			+.08mm
	J813 4394	4			+.13mm

MODEL CODES

16=Cherokee 2 Dr.(1981-83)
17=Cherokee 2 Dr.(1981-83)
73=Cherokee 2WD-2 Dr.(1984-86)
74=Cherokee 2WD-4 Dr.(1984-86)
18=Cherokee 4 Dr.(1981-83)
77=Cherokee 4WD-2 Dr.(1984-86)
78=Cherokee 4WD-4 Dr.(1984-86)
85=CJ-5 (1981-83)
86=CJ-6(1981)
87=CJ-7(1981-86)
88=CJ-8, Scrambler(1981-86)
64=Comanche 2WD-6 Ft. Box(1986)
66=Comanche 2WD-7 Ft. Box(1986)
63=Comanche 4WD-6 Ft. Box(1986)
65=Comanche 4WD-7 Ft. Box(1986)
15=Grand Wagoneer 4 Dr.(1984-86)
25=J-10 Truck 7 Ft. Box(1981-84)
26=J10 Truck 8 Ft. Box(1981-86)
27=J-20 Truck 8 Ft. Box(1981-86)
15=Wagoneer 4 Dr.(1981-83)
75=Wagoneer 4WD-4 Dr.(1984-86)

BODY
CJ=CJ-5, CJ-6, CJ-7, CJ-8, Scrambler(1981-86)
MJ=Comanche Pickup(1986)

STYLES
SJ=Wagoneer(1981-83), Grand Wagoneer(1984-86), Cherokee(1981-83), J-10, J-20(1981-86)
XJ=Wagoneer(1984-86), Cherokee(1984-86)

AR = Use as Required - = Non Illustrated Part P.A.R. = Paint as Required

« RETURN TO GROUP INDEX »

CAMSHAFT AND VALVES 1981-83 GM FOUR CYLINDER CJ-5,6,7,8, SCRAMBLER
Figure 9A-2500

81J58 2500

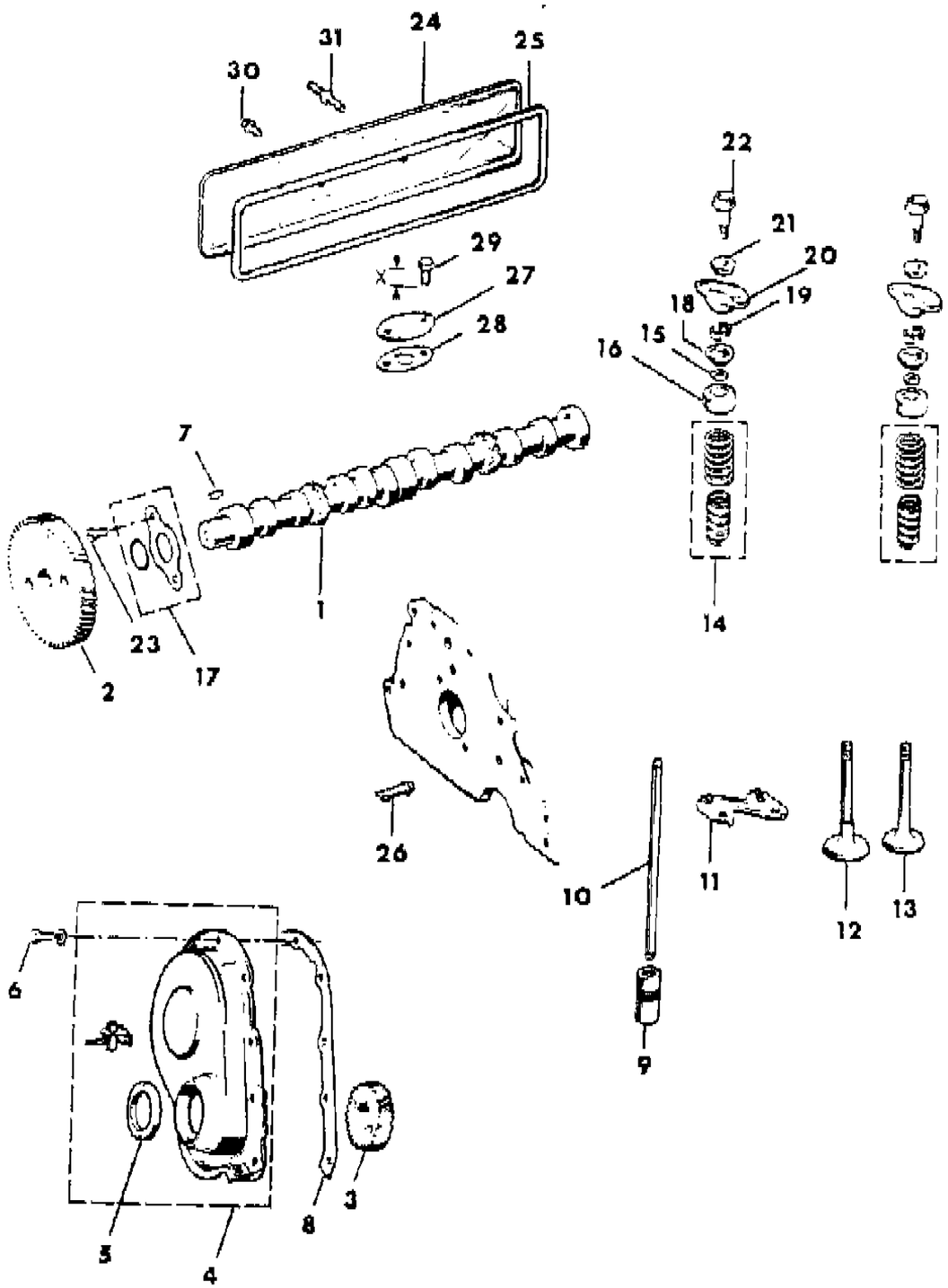

ITEM	PART NUMBER	QTY	BODY	MODEL	DESCRIPTION
14	J813 2232	8			SPRING
15	J813 2233	8			SEAL
16	J813 2234	8			SHIELD
17	J813 2250	1			BEARING, Thrust
18	J813 2231	8			RETAINER
19					KEEPER ***
	J813 2235	16			1981
	J813 2931	16			1982-83
20	J813 2770	8			ARM, Valve Rocker
21	J813 2771	8			BALL
22	J813 2772	8			BOLT
23	1150 3947	2			SCREW
24	J813 3159	1			COVER
25					GASKET
	J813 2246	1			1981
	J813 4145	1			1982-83
26	J813 2273	1			NOZZLE, Oil
27	J813 2306	1			PLATE
28	J813 2308	1			GASKET
29					BOLT
	1150 0815	2			x=16mm
	1150 7098	2			x=15mm
30	J813 2247	3			BOLT
31	J813 2575	1			STUD

MODEL CODES
16=Cherokee 2 Dr.(1981-83)
17=Cherokee 2 Dr.(1981-83)
73=Cherokee 2WD-2 Dr.(1984-86)
74=Cherokee 2WD-4 Dr.(1984-86)
18=Cherokee 4 Dr.(1981-83)
77=Cherokee 4WD-2 Dr.(1984-86)
78=Cherokee 4WD-4 Dr.(1984-86)
85=CJ-5 (1981-83)
86=CJ-6(1981)
87=CJ-7(1981-86)
88=CJ-8, Scrambler(1981-86)
64=Comanche 2WD-6 Ft. Box(1986)
66=Comanche 2WD-7 Ft. Box(1986)
63=Comanche 4WD-6 Ft. Box(1986)
65=Comanche 4WD-7 Ft. Box(1986)
15=Grand Wagoneer 4 Dr.(1984-86)
25=J-10 Truck 7 Ft. Box(1981-84)
26=J10 Truck 8 Ft. Box(1981-86)
27=J-20 Truck 8 Ft. Box(1981-86)
15=Wagoneer 4 Dr.(1981-83)
75=Wagoneer 4WD-4 Dr.(1984-86)

BODY
CJ=CJ-5, CJ-6, CJ-7, CJ-8, Scrambler(1981-86)
MJ=Comanche Pickup(1986)

STYLES
SJ=Wagoneer(1981-83), Grand Wagoneer(1984-86), Cherokee(1981-83), J-10, J-20(1981-86)
XJ=Wagoneer(1984-86), Cherokee(1984-86)

AR = Use as Required - = Non Illustrated Part P.A.R. = Paint as Required

« RETURN TO GROUP INDEX

ENGINE OILING 1981-83 GM FOUR CYLINDER CJ-5,6,7,8, SCRAMBLER
Figure 9A-2600

81J58 2600

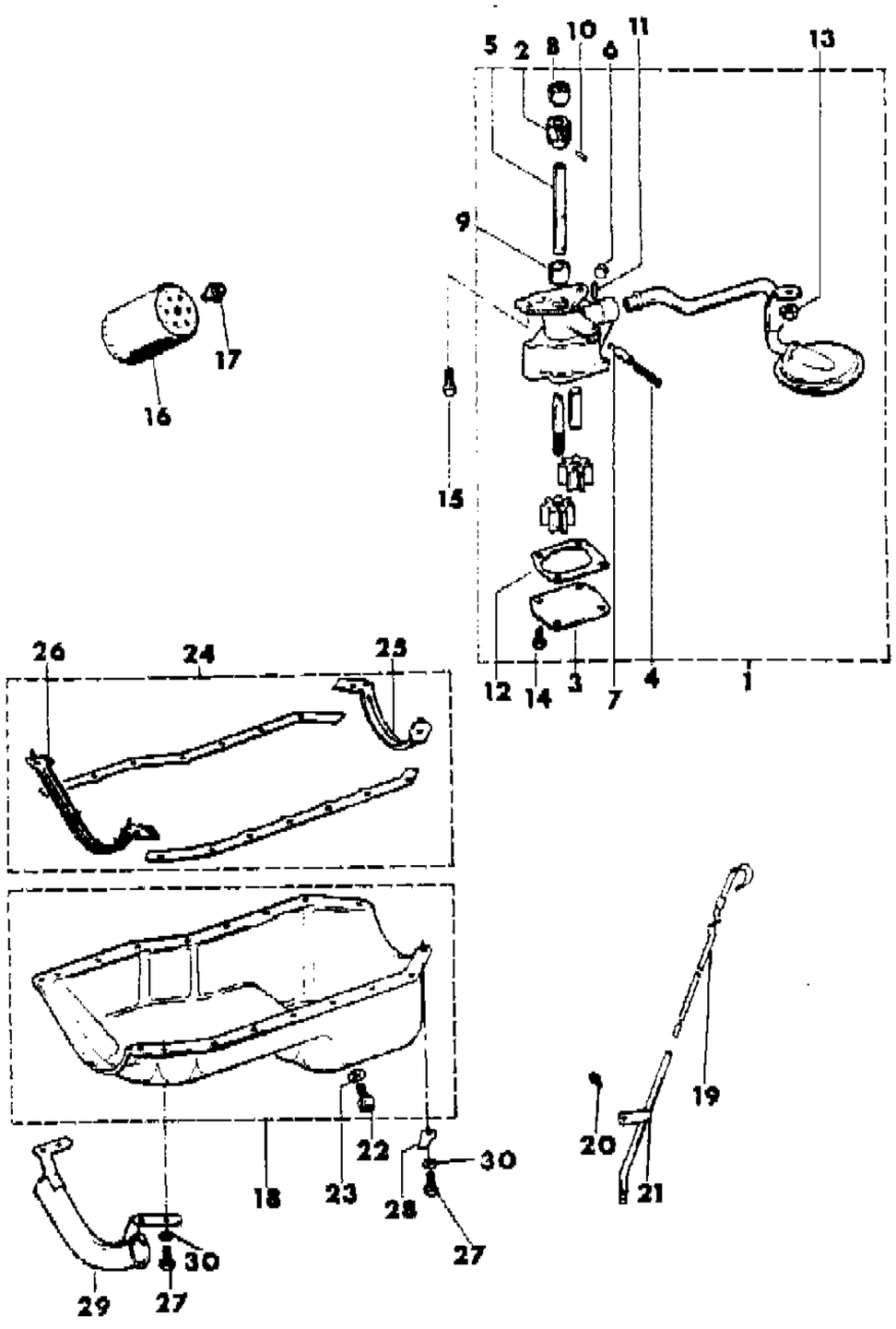

ITEM	PART NUMBER	QTY	BODY	MODEL	DESCRIPTION
1	J813 2303	1			PUMP, Engine Oil
2	J813 2855	1			GEAR, Oil Pump Drive
3					COVER, Oil Pump
	J813 2504	1			1981
	J813 2933	1			1982-83
4	J813 2298	1			SPRING
5	J813 2854	1			SHAFT, Oil Pump Gear
6	J813 2300	1			PLUG
7	J813 2299	1			PLUNGER
8	J813 2302	1			BEARING
9	J813 2301	1			BEARING
10	J812 0648	1			PIN
11	J813 2297	1			PIN
12	J813 2307	1			GASKET
13	1150 1033	1			NUT
14	J999 7991	4			BOLT
15					BOLT
	1150 0917	2			1981,1983
	1150 1872	2			1982
16	J813 2313	1			FILTER, Engine Oil
17	J813 2315	1			CONNECTOR
18					PAN, Engine Oil
	J813 2285	1			1981
	J813 3411	1			1982-83
19					INDICATOR, Engine Oil Level
	J813 2296	1			1981
	J813 4151	1			1982
	J813 4691	1			1983
20					BOLT
	1150 0815	1			1982
	1150 2788	1			1983
21					TUBE, Engine Oil Indicator
	J813 2295	1			1981
	J813 4150	1			1982
	J813 4692	1			1983
22	J813 2293	1			PLUG PACKAGE
23					GASKET
	J813 2294	1			1981-82
	J813 4690	1			1983

MODEL CODES

16=Cherokee 2 Dr.(1981-83)
17=Cherokee 2 Dr.(1981-83)
73=Cherokee 2WD-2 Dr.(1984-86)
74=Cherokee 2WD-4 Dr.(1984-86)
18=Cherokee 4 Dr.(1981-83)
77=Cherokee 4WD-2 Dr.(1984-86)
78=Cherokee 4WD-4 Dr.(1984-86)
85=CJ-5 (1981-83)
86=CJ-6(1981)
87=CJ-7(1981-86)
88=CJ-8, Scrambler(1981-86)
64=Comanche 2WD-6 Ft. Box(1986)
66=Comanche 2WD-7 Ft. Box(1986)
63=Comanche 4WD-6 Ft. Box(1986)
65=Comanche 4WD-7 Ft. Box(1986)
15=Grand Wagoneer 4 Dr.(1984-86)
25=J-10 Truck 7 Ft. Box(1981-84)
26=J10 Truck 8 Ft. Box(1981-86)
27=J-20 Truck 8 Ft. Box(1981-86)
15=Wagoneer 4 Dr.(1981-83)
75=Wagoneer 4WD-4 Dr.(1984-86)

BODY
CJ=CJ-5, CJ-6, CJ-7, CJ-8, Scrambler(1981-86)
MJ=Comanche Pickup(1986)

STYLES
SJ=Wagoneer(1981-83), Grand Wagoneer(1984-86), Cherokee(1981-83), J-10, J-20(1981-86)
XJ=Wagoneer(1984-86), Cherokee(1984-86)

AR = Use as Required - = Non Illustrated Part P.A.R. = Paint as Required

« RETURN TO GROUP INDEX »

ENGINE OILING 1981-83 GM FOUR CYLINDER CJ-5,6,7,8, SCRAMBLER
Figure 9A-2600

81J58 2600

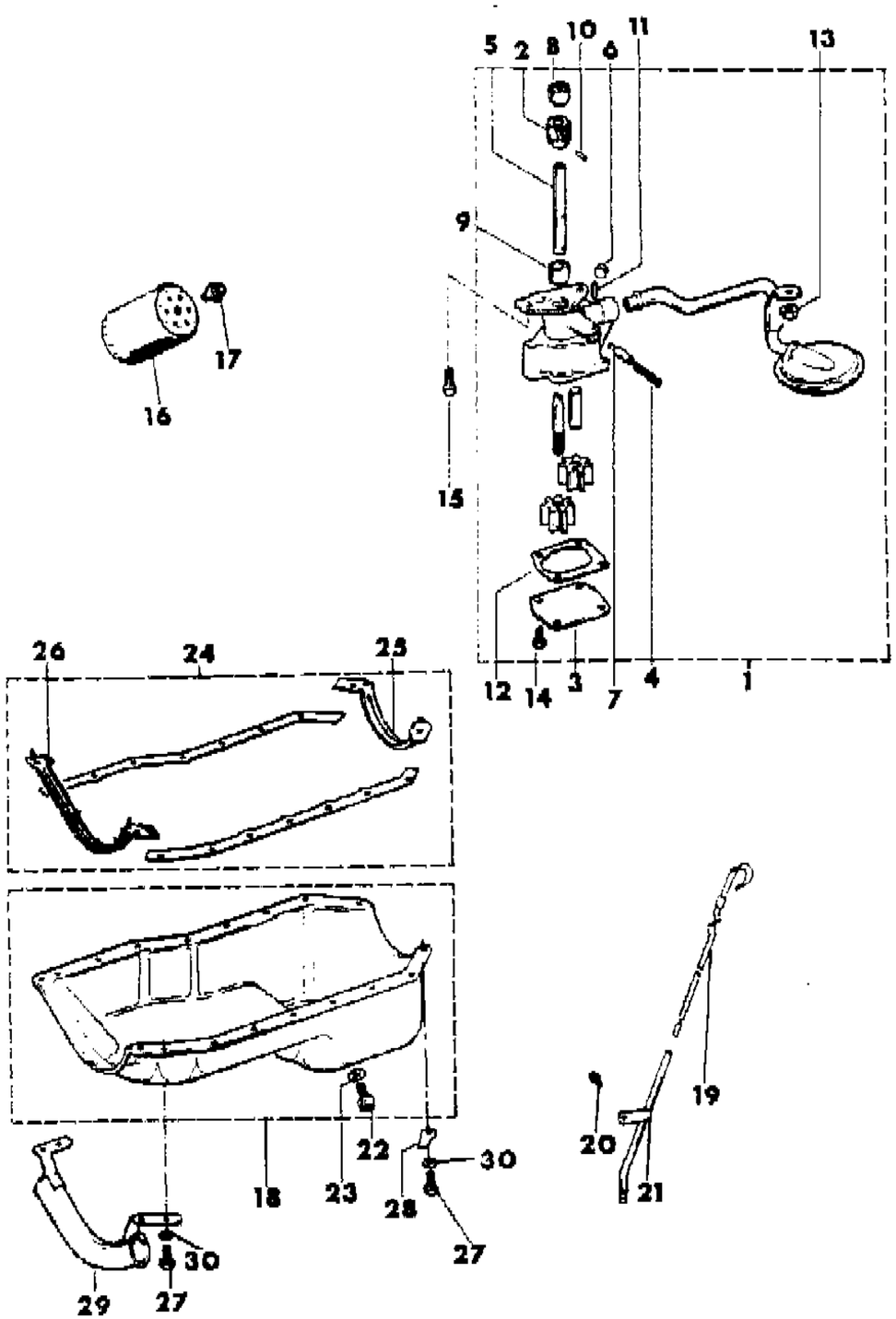

ITEM	PART NUMBER	QTY	BODY	MODEL	DESCRIPTION
24					GASKET PACKAGE
	J813 2290	1			1981
	J813 3754	1			1982-83
25					SEAL
	J813 3412	1			1981
	J813 4149	1			1982-83
26	J813 2286	1			SEAL
27					BOLT
	S018 0018	2			
	1150 0413	16			1981-82
	1150 7052	16			1983
28	J813 2288-9	1			REINFORCEMENT
29	J813 2607	1			SHIELD
30					WASHER
	S942 1423	2			
	J813 2466	16			

MODEL CODES

16=Cherokee 2 Dr.(1981-83)
17=Cherokee 2 Dr.(1981-83)
73=Cherokee 2WD-2 Dr.(1984-86)
74=Cherokee 2WD-4 Dr.(1984-86)
18=Cherokee 4 Dr.(1981-83)
77=Cherokee 4WD-2 Dr.(1984-86)
78=Cherokee 4WD-4 Dr.(1984-86)
85=CJ-5 (1981-83)
86=CJ-6(1981)
87=CJ-7(1981-86)
88=CJ-8, Scrambler(1981-86)
64=Comanche 2WD-6 Ft. Box(1986)
66=Comanche 2WD-7 Ft. Box(1986)
63=Comanche 4WD-6 Ft. Box(1986)
65=Comanche 4WD-7 Ft. Box(1986)
15=Grand Wagoneer 4 Dr.(1984-86)
25=J-10 Truck 7 Ft. Box(1981-84)
26=J10 Truck 8 Ft. Box(1981-86)
27=J-20 Truck 8 Ft. Box(1981-86)
15=Wagoneer 4 Dr.(1981-83)
75=Wagoneer 4WD-4 Dr.(1984-86)

BODY
CJ=CJ-5, CJ-6, CJ-7, CJ-8, Scrambler(1981-86)
MJ=Comanche Pickup(1986)

STYLES
SJ=Wagoneer(1981-83), Grand Wagoneer(1984-86), Cherokee(1981-83), J-10, J-20(1981-86)
XJ=Wagoneer(1984-86), Cherokee(1984-86)

AR = Use as Required - = Non Illustrated Part P.A.R. = Paint as Required

« RETURN TO GROUP INDEX

MANIFOLD, INTAKE AND EXHAUST 1981-83 GM FOUR CYLINDER CJ-5,6,7,8, SCRAMBLER
Figure 9A-2700

81J58 2700

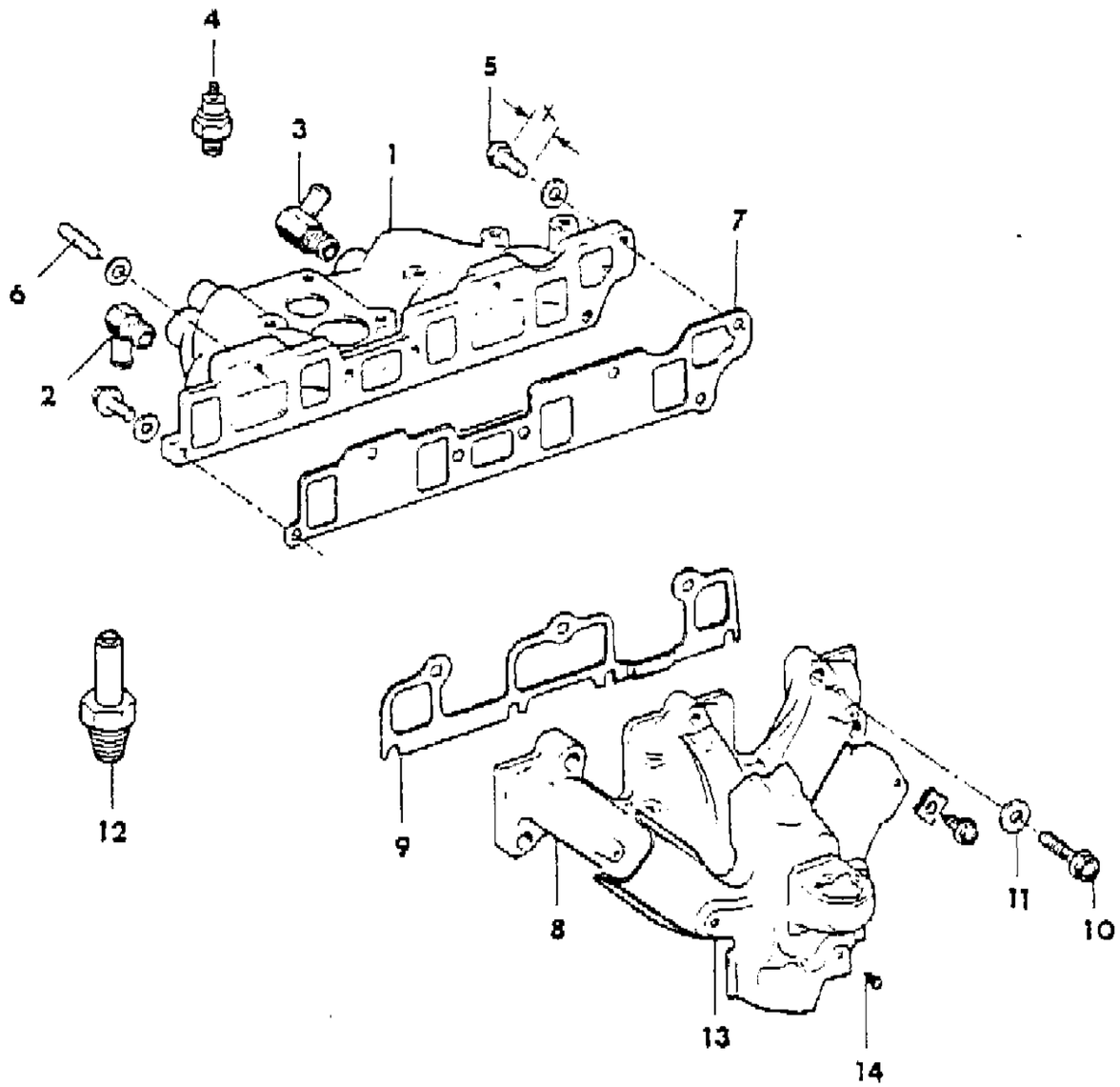

ITEM	PART NUMBER	QTY	BODY	MODEL	DESCRIPTION
1	J813 2318	1			MANIFOLD, Intake
2	J813 2311	1			FITTING
3	J813 2281	1			FITTING
4	3300 0564	1			1983: SWITCH, California Only ***
5					BOLT
	J813 2322	3			X=30mm
	J813 2323	2			X=40mm
	J813 4706	1			X=35mm
6	J813 4156	1			1982-83: BOLT, Stud, M8 ***
7					GASKET, Intake, Manifold
	J813 2319	1			1981-82
	J813 4694	1			1983
8					MANIFOLD, Exhaust
	J813 2339	1			1981
	J813 4158	1			1982
	J813 4697	1			1983
9	J813 2340	1			GASKET
10					BOLT
	J813 2320	7			1981-82
	J813 4698	5			1983
	J813 4705	1			1983; Stud
	1150 2788	1			1983
11	J813 2454	4			WASHER
12	J813 3064	1			FITTING, Vacuum
13					SHROUD ***
	J813 2333	1			1981-82: California
	J813 4695	1			1983: Inner
	J813 4694	1			1982: Outer
14	J813 2331	3			STUD

MODEL CODES

16=Cherokee 2 Dr.(1981-83)
17=Cherokee 2 Dr.(1981-83)
73=Cherokee 2WD-2 Dr.(1984-86)
74=Cherokee 2WD-4 Dr.(1984-86)
18=Cherokee 4 Dr.(1981-83)
77=Cherokee 4WD-2 Dr.(1984-86)
78=Cherokee 4WD-4 Dr.(1984-86)
85=CJ-5 (1981-83)
86=CJ-6(1981)
87=CJ-7(1981-86)
88=CJ-8, Scrambler(1981-86)
64=Comanche 2WD-6 Ft. Box(1986)
66=Comanche 2WD-7 Ft. Box(1986)
63=Comanche 4WD-6 Ft. Box(1986)
65=Comanche 4WD-7 Ft. Box(1986)
15=Grand Wagoneer 4 Dr.(1984-86)
25=J-10 Truck 7 Ft. Box(1981-84)
26=J10 Truck 8 Ft. Box(1981-86)
27=J-20 Truck 8 Ft. Box(1981-86)
15=Wagoneer 4 Dr.(1981-83)
75=Wagoneer 4WD-4 Dr.(1984-86)

BODY
CJ=CJ-5, CJ-6, CJ-7, CJ-8, Scrambler(1981-86)
MJ=Comanche Pickup(1986)

STYLES
SJ=Wagoneer(1981-83), Grand Wagoneer(1984-86), Cherokee(1981-83), J-10, J-20(1981-86)
XJ=Wagoneer(1984-86), Cherokee(1984-86)

AR = Use as Required - = Non Illustrated Part P.A.R. = Paint as Required

« RETURN TO GROUP INDEX

ENGINE MOUNTING 1981-83 GM FOUR CYLINDER CJ-5,6,7,8, SCRAMBLER
Figure 9A-2800

81J58 2800

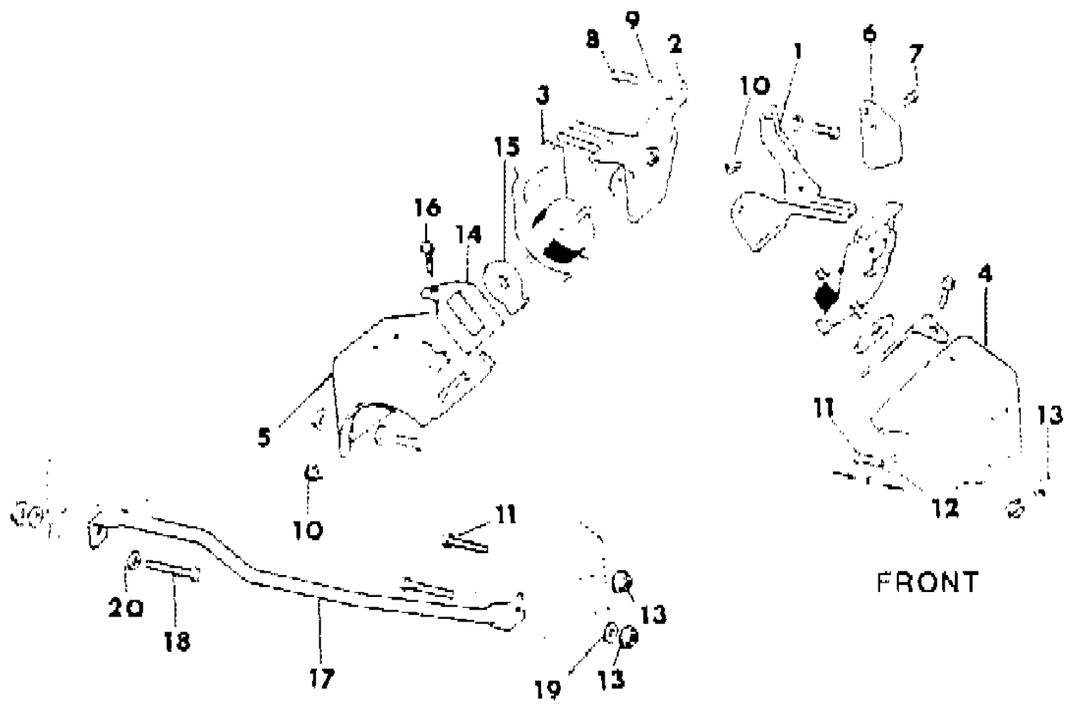

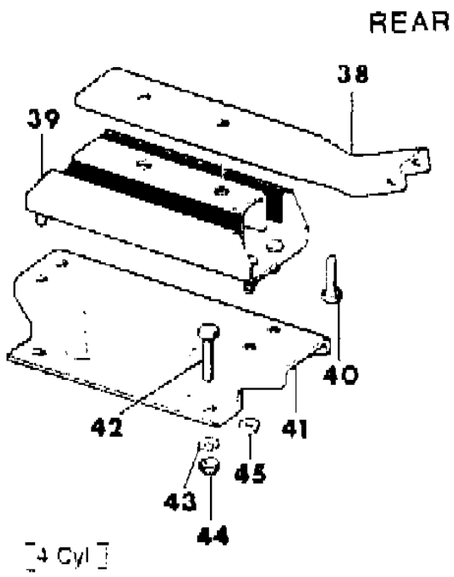

W/AUTOMATIC TRANSMISSION

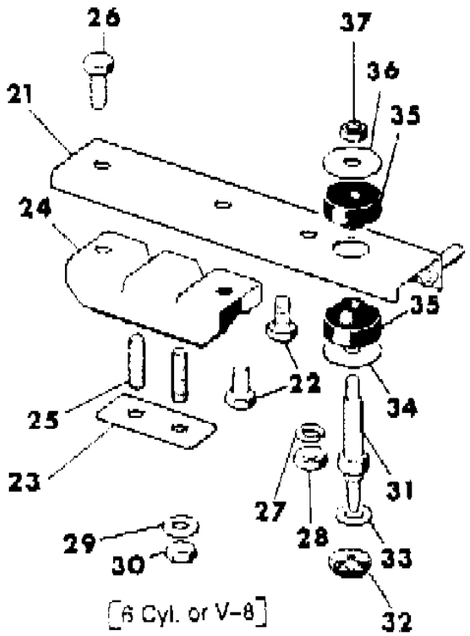

W/MANUAL TRANSMISSION

ITEM	PART NUMBER	QTY	BODY	MODEL	DESCRIPTION
1	J325 1161	1			BRACKET, Engine, Left
2	J325 1160	1			BRACKET, Engine, Right
3	J536 1829	2			MOUNT, Engine ***
4	J535 9855	1			BRACKET, Left
5	J535 9854	1			BRACKET, Right
6	J325 1318	1			SHIELD, Heat
7	J942 6241	1			BOLT
8	1150 2655	6			BOLT
9	1150 0192	6			WASHER, Lock
10	J400 4005	4			NUT
11					BOLT
	S018 1650	AR			X=2.50"
	S018 1651	AR			x=2.75"
	S018 1652	AR			x=3.00"
12					WASHER
	J400 1761	AR			Plain
	J012 0382	AR			Lock
13	J941 1783	1			NUT, Lock
14	J535 9877	AR			SHIM ***
15	J537 0015	2			WASHER
16	J400 1933	AR			BOLT
17	J535 8188	1			BAR, Tie With Heavy Duty Suspension
18	S942 5367	2			BOLT
19	J400 1761	2			WASHER, Plain
20	J400 1829	AR			WASHER
21					BRACKET
	J535 9875	1			1981
	J536 3750	1			1982-86
22	J400 6110	2			BOLT
23	J536 1885	1			SPACER
24	J137 0910	1			INSULATOR
25	J400 4819	2			STUD
26	J018 0145	1			BOLT
27	J012 0383	1			WASHER
28	J027 1501	1			NUT
29	J400 1120	2			WASHER
30	J941 3215	2			NUT
31	J535 8879	1			STUD
32	J941 1783	1			NUT

MODEL CODES
16=Cherokee 2 Dr.(1981-83)
17=Cherokee 2 Dr.(1981-83)
73=Cherokee 2WD-2 Dr.(1984-86)
74=Cherokee 2WD-4 Dr.(1984-86)
18=Cherokee 4 Dr.(1981-83)
77=Cherokee 4WD-2 Dr.(1984-86)
78=Cherokee 4WD-4 Dr.(1984-86)
85=CJ-5 (1981-83)
86=CJ-6(1981)
87=CJ-7(1981-86)
88=CJ-8, Scrambler(1981-86)
64=Comanche 2WD-6 Ft. Box(1986)
66=Comanche 2WD-7 Ft. Box(1986)
63=Comanche 4WD-6 Ft. Box(1986)
65=Comanche 4WD-7 Ft. Box(1986)
15=Grand Wagoneer 4 Dr.(1984-86)
25=J-10 Truck 7 Ft. Box(1981-84)
26=J10 Truck 8 Ft. Box(1981-86)
27=J-20 Truck 8 Ft. Box(1981-86)
15=Wagoneer 4 Dr.(1981-83)
75=Wagoneer 4WD-4 Dr.(1984-86)

BODY
CJ=CJ-5, CJ-6, CJ-7, CJ-8, Scrambler(1981-86)
MJ=Comanche Pickup(1986)

STYLES
SJ=Wagoneer(1981-83), Grand Wagoneer(1984-86), Cherokee(1981-83), J-10, J-20(1981-86)
XJ=Wagoneer(1984-86), Cherokee(1984-86)

AR = Use as Required - = Non Illustrated Part P.A.R. = Paint as Required

« RETURN TO GROUP INDEX »

ENGINE MOUNTING 1981-83 GM FOUR CYLINDER CJ-5,6,7,8, SCRAMBLER
Figure 9A-2800

81J58 2800

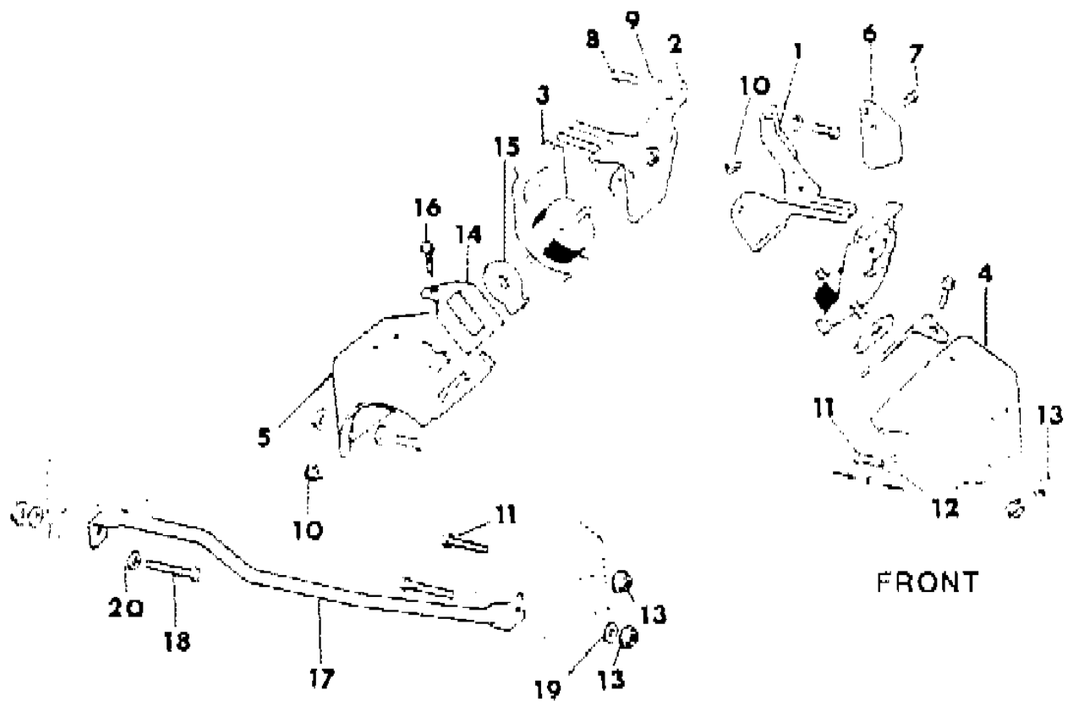

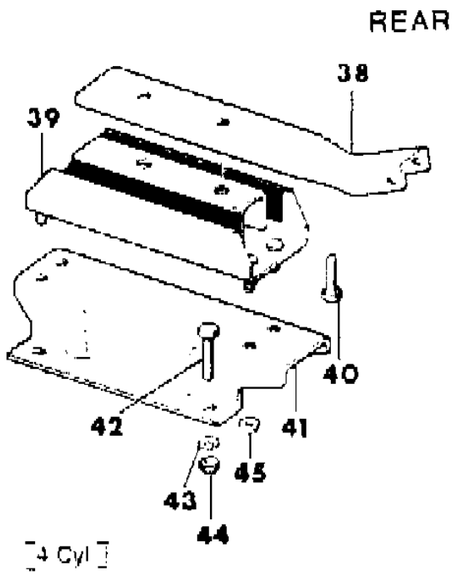

W/AUTOMATIC TRANSMISSION

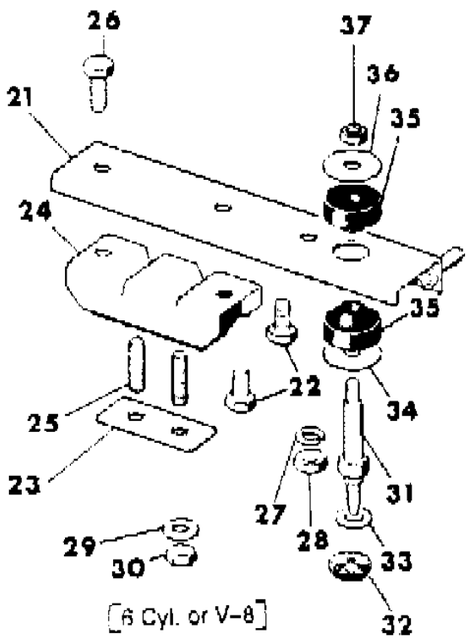

W/MANUAL TRANSMISSION

ITEM	PART NUMBER	QTY	BODY	MODEL	DESCRIPTION
33	J400 1134	1			WASHER
34	J094 1399	1			WASHER
35	J094 5266	2			INSULATER ***
36	J094 5269	1			WASHER
37	J941 1783	1			NUT
38	J536 2511	1			BRACKET
39	J323 8013	1			INSULATOR
40	J400 6110	2			BOLT
41	J536 2482	1			PLATE
42	J018 0147	2			BOLT
43	J012 0383	2			WASHER
44	J027 1501	2			NUT
45	J400 7045	4			NUT

MODEL CODES
16=Cherokee 2 Dr.(1981-83)
17=Cherokee 2 Dr.(1981-83)
73=Cherokee 2WD-2 Dr.(1984-86)
74=Cherokee 2WD-4 Dr.(1984-86)
18=Cherokee 4 Dr.(1981-83)
77=Cherokee 4WD-2 Dr.(1984-86)
78=Cherokee 4WD-4 Dr.(1984-86)
85=CJ-5 (1981-83)
86=CJ-6(1981)
87=CJ-7(1981-86)
88=CJ-8, Scrambler(1981-86)
64=Comanche 2WD-6 Ft. Box(1986)
66=Comanche 2WD-7 Ft. Box(1986)
63=Comanche 4WD-6 Ft. Box(1986)
65=Comanche 4WD-7 Ft. Box(1986)
15=Grand Wagoneer 4 Dr.(1984-86)
25=J-10 Truck 7 Ft. Box(1981-84)
26=J10 Truck 8 Ft. Box(1981-86)
27=J-20 Truck 8 Ft. Box(1981-86)
15=Wagoneer 4 Dr.(1981-83)
75=Wagoneer 4WD-4 Dr.(1984-86)

BODY
CJ=CJ-5, CJ-6, CJ-7, CJ-8, Scrambler(1981-86)
MJ=Comanche Pickup(1986)

STYLES
SJ=Wagoneer(1981-83), Grand Wagoneer(1984-86), Cherokee(1981-83), J-10, J-20(1981-86)
XJ=Wagoneer(1984-86), Cherokee(1984-86)

AR = Use as Required - = Non Illustrated Part P.A.R. = Paint as Required

BLOCK, ENGINE 1983-86 AMC FOUR CYLINDER CJ-7,8, SCRAMBLER
Figure 9A-2900

81J58 2900

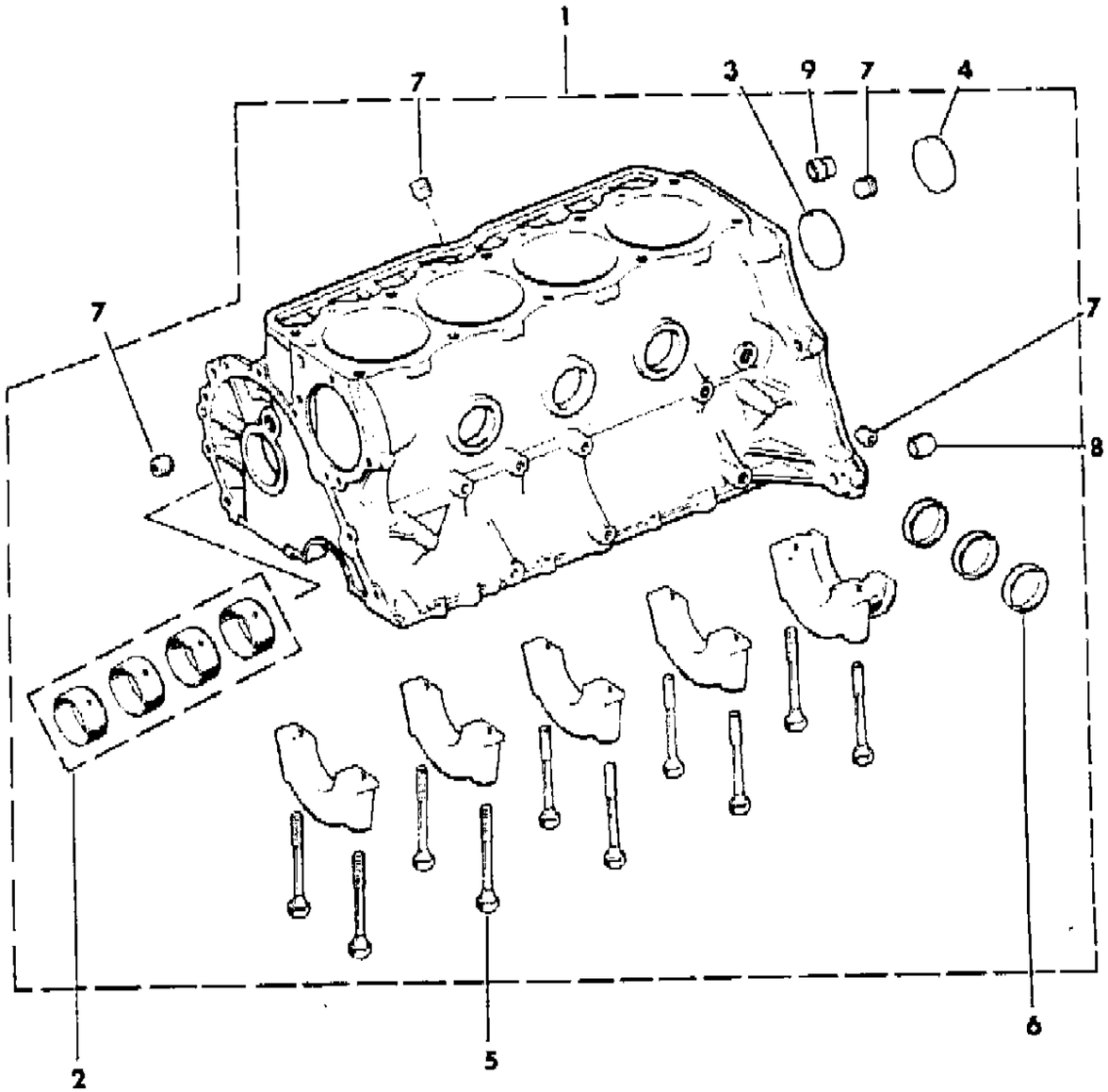

ITEM	PART NUMBER	QTY	BODY	MODEL	DESCRIPTION
1					BLOCK, Engine
	8350 0246	1			1983-85
	8350 2498	1			1986
2					BEARING PACKAGE
	J320 5711	1			Standard
	J320 8985	1			+.010"
3	J317 2313	1			PLUG
4	J310 5394	1			PLUG
5	J400 6948	10			BOLT
6	J400 6580	3			PLUG
7	J044 4660	4			PLUG
8	J400 6953	1			PIN
9	J324 1332	1			PIN

MODEL CODES
16=Cherokee 2 Dr.(1981-83)
17=Cherokee 2 Dr.(1981-83)
73=Cherokee 2WD-2 Dr.(1984-86)
74=Cherokee 2WD-4 Dr.(1984-86)
18=Cherokee 4 Dr.(1981-83)
77=Cherokee 4WD-2 Dr.(1984-86)
78=Cherokee 4WD-4 Dr.(1984-86)
85=CJ-5 (1981-83)
86=CJ-6(1981)
87=CJ-7(1981-86)
88=CJ-8, Scrambler(1981-86)
64=Comanche 2WD-6 Ft. Box(1986)
66=Comanche 2WD-7 Ft. Box(1986)
63=Comanche 4WD-6 Ft. Box(1986)
65=Comanche 4WD-7 Ft. Box(1986)
15=Grand Wagoneer 4 Dr.(1984-86)
25=J-10 Truck 7 Ft. Box(1981-84)
26=J10 Truck 8 Ft. Box(1981-86)
27=J-20 Truck 8 Ft. Box(1981-86)
15=Wagoneer 4 Dr.(1981-83)
75=Wagoneer 4WD-4 Dr.(1984-86)

BODY
CJ=CJ-5, CJ-6, CJ-7, CJ-8, Scrambler(1981-86)
MJ=Comanche Pickup(1986)

STYLES
SJ=Wagoneer(1981-83), Grand Wagoneer(1984-86), Cherokee(1981-83), J-10, J-20(1981-86)
XJ=Wagoneer(1984-86), Cherokee(1984-86)

AR = Use as Required - = Non Illustrated Part P.A.R. = Paint as Required

« RETURN TO GROUP INDEX

GASKET SET 1983-86 AMC FOUR CYLINDER CJ-7,8, SCRAMBLER
Figure 9A-3000

81J58 3000

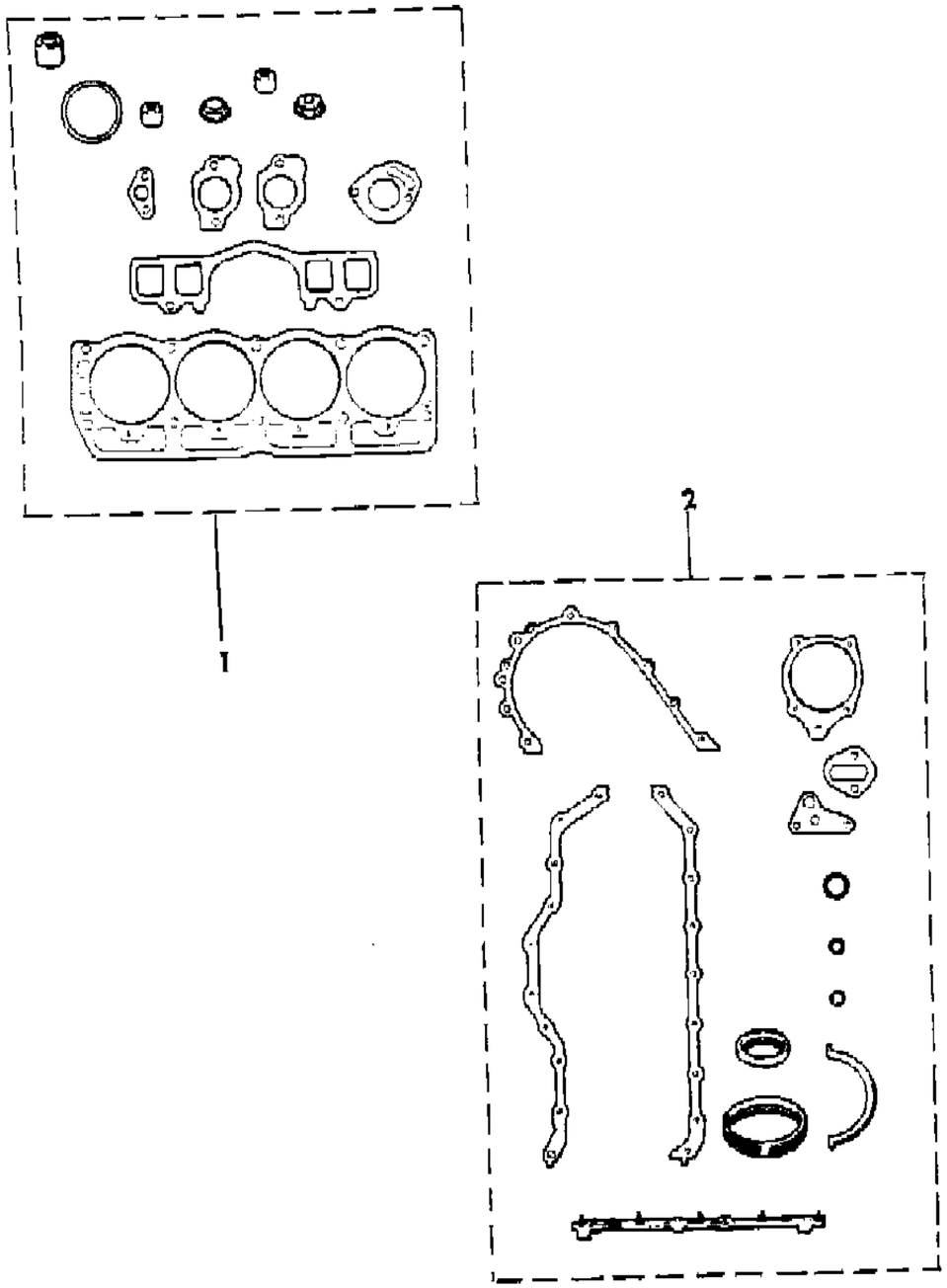

ITEM	PART NUMBER	QTY	BODY	MODEL	DESCRIPTION
1					GASKET PACKAGE, Engine Upper
	8350 0255	1			1983-85
	8350 2501	1			1986
2	8350 0256	1			GASKET PACKAGE, Engine Lower

MODEL CODES

16=Cherokee 2 Dr.(1981-83)
17=Cherokee 2 Dr.(1981-83)
73=Cherokee 2WD-2 Dr.(1984-86)
74=Cherokee 2WD-4 Dr.(1984-86)
18=Cherokee 4 Dr.(1981-83)
77=Cherokee 4WD-2 Dr.(1984-86)
78=Cherokee 4WD-4 Dr.(1984-86)
85=CJ-5 (1981-83)
86=CJ-6(1981)
87=CJ-7(1981-86)
88=CJ-8, Scrambler(1981-86)
64=Comanche 2WD-6 Ft. Box(1986)
66=Comanche 2WD-7 Ft. Box(1986)
63=Comanche 4WD-6 Ft. Box(1986)
65=Comanche 4WD-7 Ft. Box(1986)
15=Grand Wagoneer 4 Dr.(1984-86)
25=J-10 Truck 7 Ft. Box(1981-84)
26=J10 Truck 8 Ft. Box(1981-86)
27=J-20 Truck 8 Ft. Box(1981-86)
15=Wagoneer 4 Dr.(1981-83)
75=Wagoneer 4WD-4 Dr.(1984-86)

BODY
CJ=CJ-5, CJ-6, CJ-7, CJ-8, Scrambler(1981-86)
MJ=Comanche Pickup(1986)

STYLES
SJ=Wagoneer(1981-83), Grand Wagoneer(1984-86), Cherokee(1981-83), J-10, J-20(1981-86)
XJ=Wagoneer(1984-86), Cherokee(1984-86)

AR = Use as Required - = Non Illustrated Part P.A.R. = Paint as Required

« RETURN TO GROUP INDEX

CYLINDER HEAD 1983-86 AMC FOUR CYLINDER CJ-7,8, SCRAMBLER
Figure 9A-3100

81J58 3100

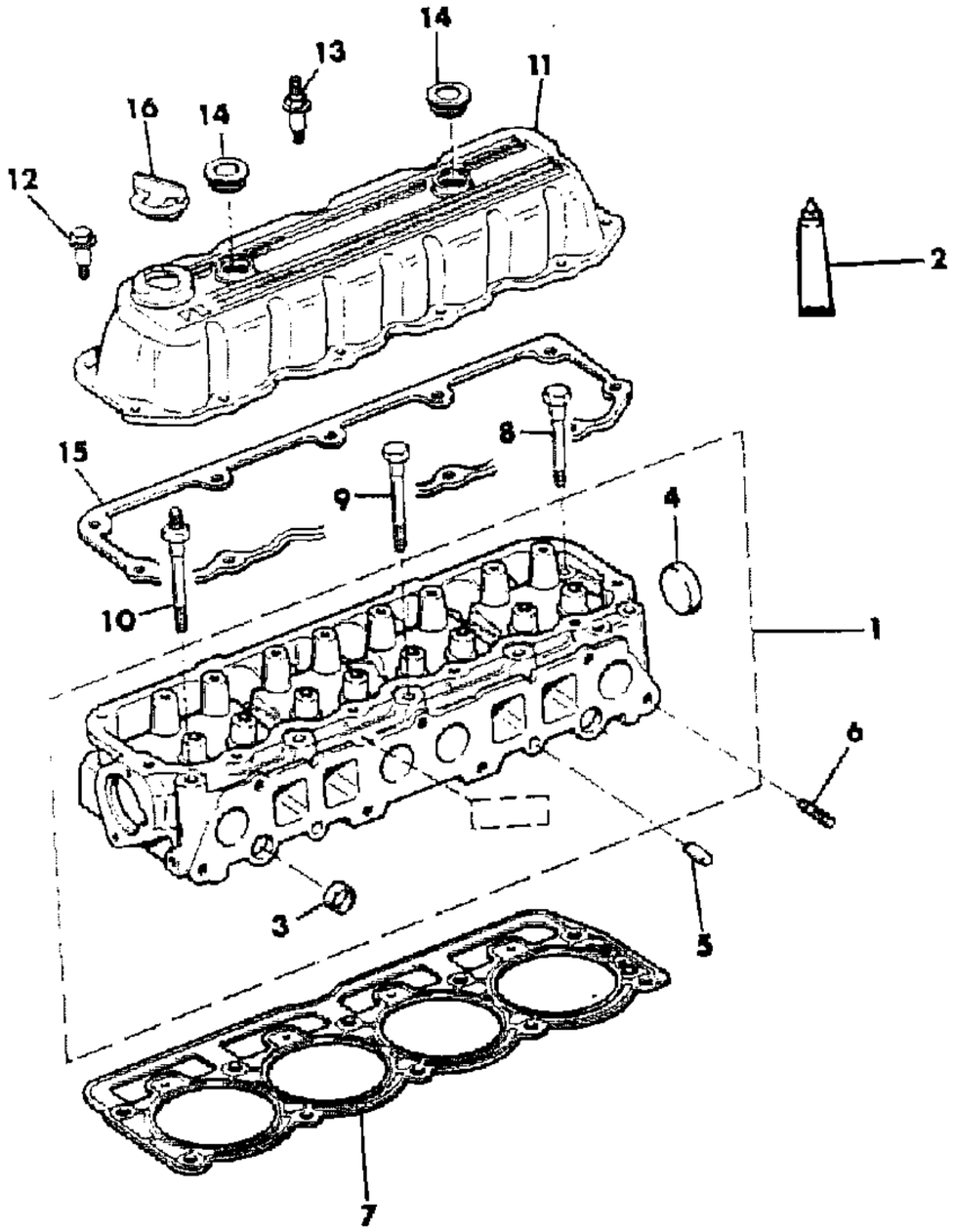

ITEM	PART NUMBER	QTY	BODY	MODEL	DESCRIPTION
1					HEAD, Engine Cylinder
	8350 0254	1			1983
	8350 0675	1			1984-85
	8350 2487	1			1986
	8350 1411	1			1983-85: EXPORT, Australian Design Rules, Non-Regulated Markets
	8350 2488	1			1986: EXPORT, Non-Regulated Markets
2	J899 3317	1			SEALER
3	J317 2319	4			PLUG
4	J310 5394	1			PLUG
5	J317 2318	2			PIN
6	J400 3917	2			STUD
7					GASKET
	J324 1649	1			1983-85
	3300 2419	1			1986
8					BOLT
	J400 6593	5			1983-85
	J400 7308	5			1986
9					BOLT
	J400 7170	1			1983-85
	J400 7307	1			1986
10					BOLT, Stud
	J400 6955	4			1983-85
	J400 7310	4			1986
11	J324 2121	1			COVER, Cylinder Head
12	S943 2476	8			BOLT
13	J400 7144	3			BOLT, Stud
14					GROMMET
	J323 7765	1			.72" Inside Diameter
	3300 1237	1			.45" Inside Diameter
15	J324 1731	1			GASKET
16	3300 1016	1			CAP

MODEL CODES

16=Cherokee 2 Dr.(1981-83)	78=Cherokee 4WD-4 Dr.(1984-86)	64=Comanche 2WD-6 Ft. Box(1986)	25=J-10 Truck 7 Ft. Box(1981-84)
17=Cherokee 2 Dr.(1981-83)	85=CJ-5 (1981-83)	66=Comanche 2WD-7 Ft. Box(1986)	26=J10 Truck 8 Ft. Box(1981-86)
73=Cherokee 2WD-2 Dr.(1984-86)	86=CJ-6(1981)	63=Comanche 4WD-6 Ft. Box(1986)	27=J-20 Truck 8 Ft. Box(1981-86)
74=Cherokee 2WD-4 Dr.(1984-86)	87=CJ-7(1981-86)	65=Comanche 4WD-7 Ft. Box(1986)	15=Wagoneer 4 Dr.(1981-83)
18=Cherokee 4 Dr.(1981-83)	88=CJ-8, Scrambler(1981-86)	15=Grand Wagoneer 4 Dr.(1984-86)	75=Wagoneer 4WD-4 Dr.(1984-86)
77=Cherokee 4WD-2 Dr.(1984-86)			

BODY
CJ=CJ-5, CJ-6, CJ-7, CJ-8, Scrambler(1981-86)
MJ=Comanche Pickup(1986)

STYLES
SJ=Wagoneer(1981-83), Grand Wagoneer(1984-86), Cherokee(1981-83), J-10, J-20(1981-86)
XJ=Wagoneer(1984-86), Cherokee(1984-86)

AR = Use as Required - = Non Illustrated Part P.A.R. = Paint as Required

« RETURN TO GROUP INDEX

CRANKSHAFT, FLYWHEEL AND PISTON 1983-86 AMC FOUR CYLINDER CJ-7,8, SCRAMBLER
Figure 9A-3200

81J58 3200

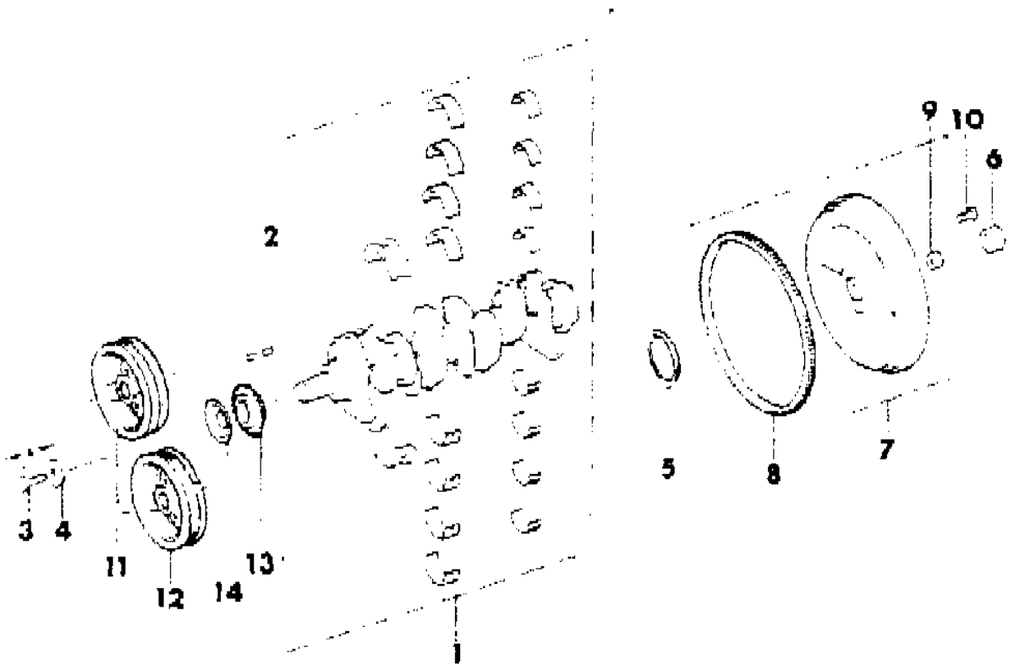

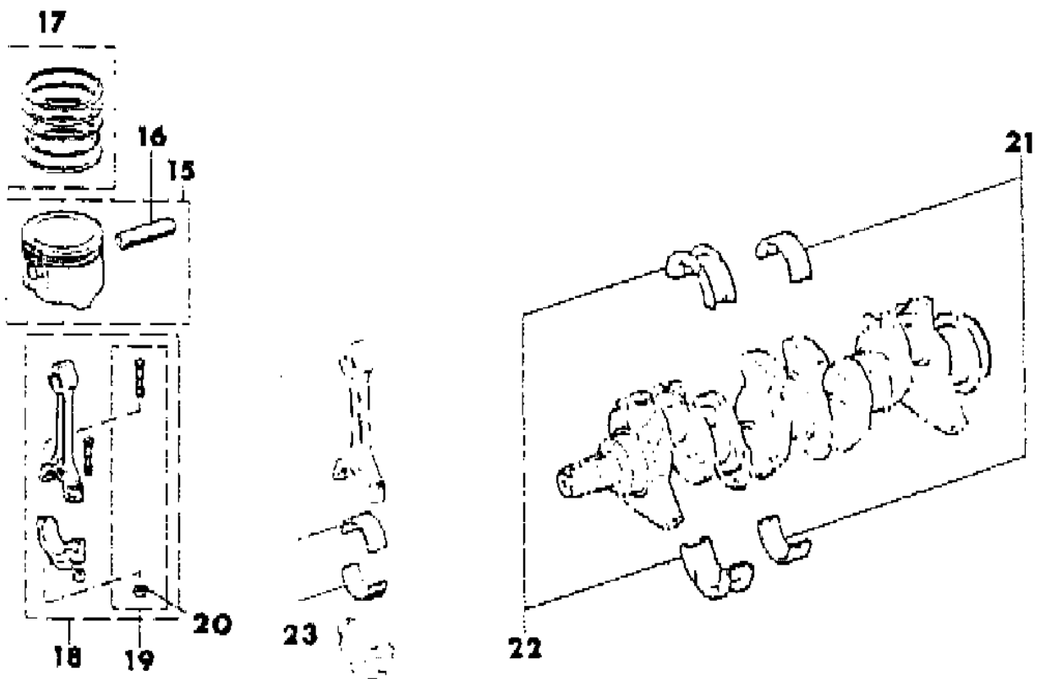

ITEM	PART NUMBER	QTY	BODY	MODEL	DESCRIPTION
1	8350 0242	1			CRANKSHAFT PACKAGE ***
2	J310 7002	1			KEY, Shaft
3	J018 1429	1			BOLT
4	J812 7255	1			WASHER
5	3300 4143	1			SEAL
6	5300 0832	1			BUSHING, With Automatic Transmission
7	J324 2667	1			FLYWHEEL, With Manual Transmission
8	J324 1718	1			GEAR, Ring, With Manual Transmission
9	J325 0005	1			BEARING, Pilot, With Manual Transmission
10	S400 7123	6			BOLT, With Manual Transmission
11					DAMPER, Without Serpentine Belt Drive
	J324 2885	1			1983
	J324 2885	1			1984-86
12					DAMPER, With Serpentine Belt Drive
	J324 2857	1			1983
	J324 2886	1			1984-86
13	J324 2281	1			SPROCKET, Crankshaft
14	J317 3076	1			SLINGER, Oil ***
15					PISTON, Package
	8350 0251	4			Standard
	8350 0252	4			+.010"
16					PIN, Piston
	J318 0483	4			Standard
	8350 0303	4			+.003"
	8350 0304	4			+.005"
17					RING PACKAGE, Piston
	8350 0210	4			Standard
	8350 0211	4			+.010"
18	J323 7816	4			ROD, Connecting
19	J813 3824	8			BOLT PACKAGE ***
20	J400 6385	8			NUT
21					BEARING PACKAGE
	J813 3252	4			Standard
	J813 3680	4			-.001"
	J813 3682	4			-.002"
	J813 3254	4			-.010"
	J813 3684	4			-.012"
22					BEARING PACKAGE
	J813 3253	1			Standard

MODEL CODES

16=Cherokee 2 Dr.(1981-83)
17=Cherokee 2 Dr.(1981-83)
73=Cherokee 2WD-2 Dr.(1984-86)
74=Cherokee 2WD-4 Dr.(1984-86)
18=Cherokee 4 Dr.(1981-83)
77=Cherokee 4WD-2 Dr.(1984-86)
78=Cherokee 4WD-4 Dr.(1984-86)
85=CJ-5 (1981-83)
86=CJ-6(1981)
87=CJ-7(1981-86)
88=CJ-8, Scrambler(1981-86)
64=Comanche 2WD-6 Ft. Box(1986)
66=Comanche 2WD-7 Ft. Box(1986)
63=Comanche 4WD-6 Ft. Box(1986)
65=Comanche 4WD-7 Ft. Box(1986)
15=Grand Wagoneer 4 Dr.(1984-86)
25=J-10 Truck 7 Ft. Box(1981-84)
26=J10 Truck 8 Ft. Box(1981-86)
27=J-20 Truck 8 Ft. Box(1981-86)
15=Wagoneer 4 Dr.(1981-83)
75=Wagoneer 4WD-4 Dr.(1984-86)

BODY
CJ=CJ-5, CJ-6, CJ-7, CJ-8, Scrambler(1981-86)
MJ=Comanche Pickup(1986)

STYLES
SJ=Wagoneer(1981-83), Grand Wagoneer(1984-86), Cherokee(1981-83), J-10, J-20(1981-86)
XJ=Wagoneer(1984-86), Cherokee(1984-86)

AR = Use as Required - = Non Illustrated Part P.A.R. = Paint as Required

« RETURN TO GROUP INDEX »

CRANKSHAFT, FLYWHEEL AND PISTON 1983-86 AMC FOUR CYLINDER CJ-7,8, SCRAMBLER
Figure 9A-3200

81J58 3200

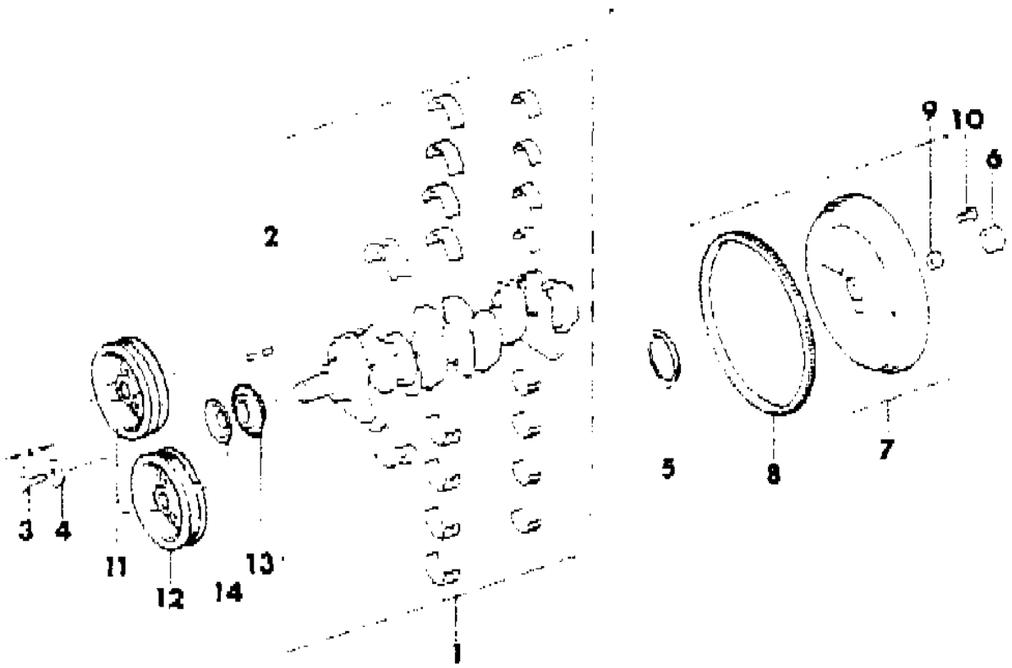

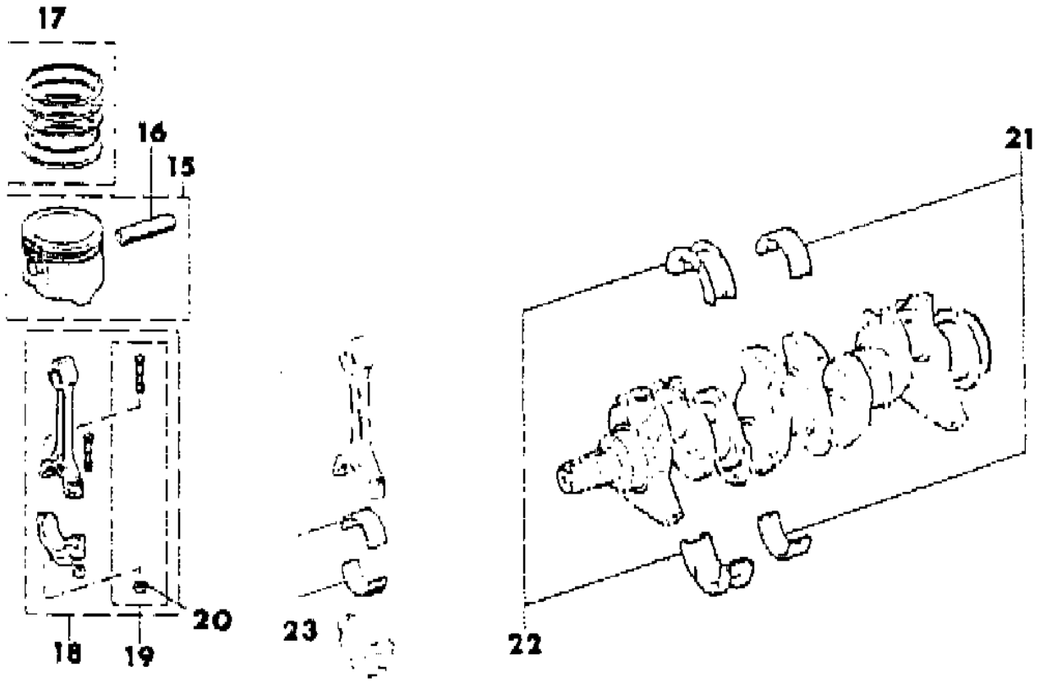

ITEM	PART NUMBER	QTY	BODY	MODEL	DESCRIPTION
	J813 3681	1			-.001"
	J813 3683	1			-.002"
	J813 3255	1			-.010"
	J813 3685	1			-.012"
23					BEARING PACKAGE
	8350 0300	4			Standard
	8350 0397	4			-.001"
	8350 0301	4			-.010"

MODEL CODES

16=Cherokee 2 Dr.(1981-83)
17=Cherokee 2 Dr.(1981-83)
73=Cherokee 2WD-2 Dr.(1984-86)
74=Cherokee 2WD-4 Dr.(1984-86)
18=Cherokee 4 Dr.(1981-83)
77=Cherokee 4WD-2 Dr.(1984-86)
78=Cherokee 4WD-4 Dr.(1984-86)
85=CJ-5 (1981-83)
86=CJ-6(1981)
87=CJ-7(1981-86)
88=CJ-8, Scrambler(1981-86)
64=Comanche 2WD-6 Ft. Box(1986)
66=Comanche 2WD-7 Ft. Box(1986)
63=Comanche 4WD-6 Ft. Box(1986)
65=Comanche 4WD-7 Ft. Box(1986)
15=Grand Wagoneer 4 Dr.(1984-86)
25=J-10 Truck 7 Ft. Box(1981-84)
26=J10 Truck 8 Ft. Box(1981-86)
27=J-20 Truck 8 Ft. Box(1981-86)
15=Wagoneer 4 Dr.(1981-83)
75=Wagoneer 4WD-4 Dr.(1984-86)

BODY
CJ=CJ-5, CJ-6, CJ-7, CJ-8, Scrambler(1981-86)
MJ=Comanche Pickup(1986)

STYLES
SJ=Wagoneer(1981-83), Grand Wagoneer(1984-86), Cherokee(1981-83), J-10, J-20(1981-86)
XJ=Wagoneer(1984-86), Cherokee(1984-86)

AR = Use as Required - = Non Illustrated Part P.A.R. = Paint as Required

« RETURN TO GROUP INDEX

CAMSHAFT AND VALVES 1983-86 AMC FOUR CYLINDER CJ-7,8, SCRAMBLER
Figure 9A-3300

81J58 3300

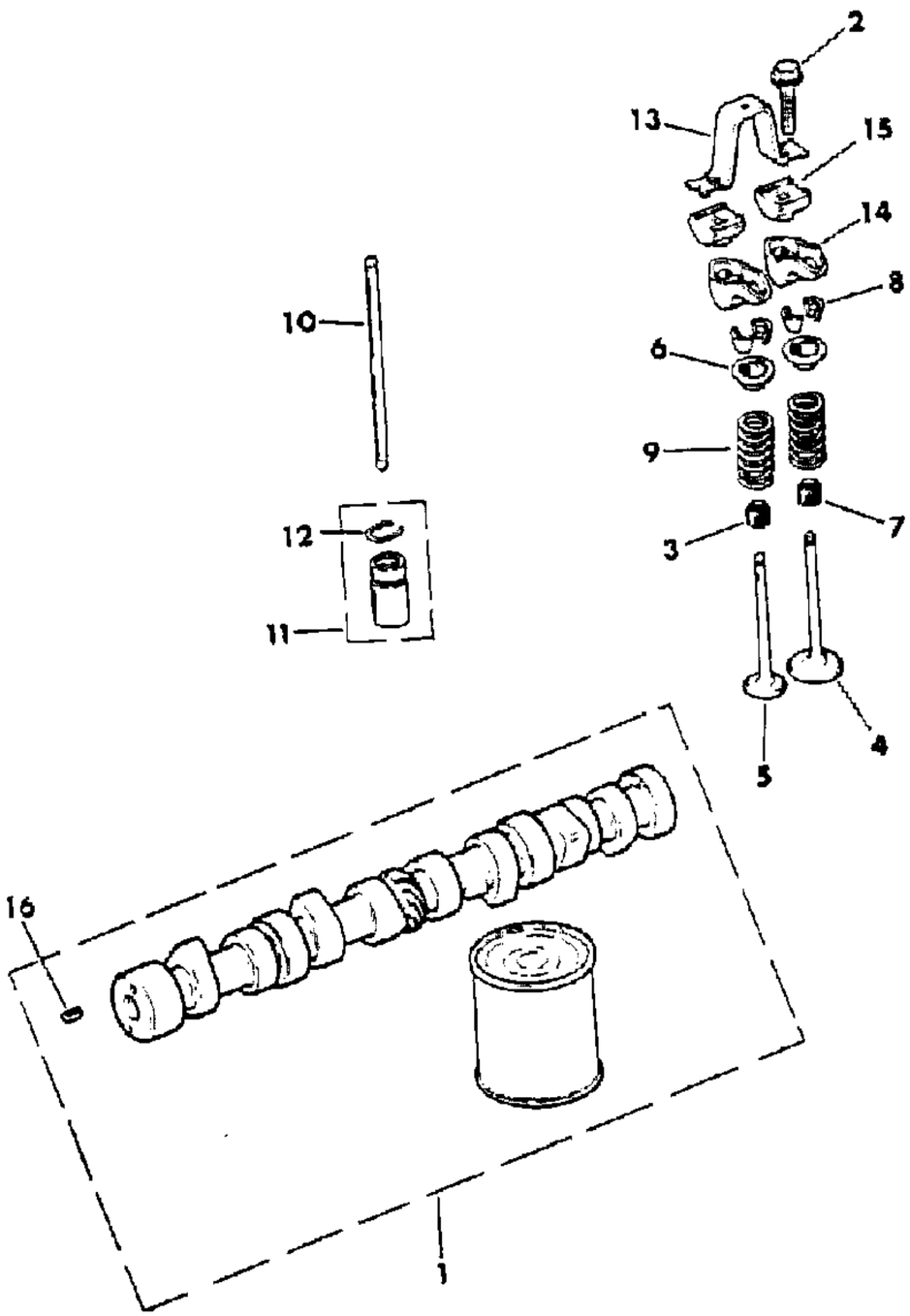

ITEM	PART NUMBER	QTY	BODY	MODEL	DESCRIPTION
1	8350 0249	1			CAMSHAFT
2	J812 0512	8			BOLT
3					DEFLECTOR ***
					1983-85
	J324 2864	4			Standard
	J324 2864	4			+.003"
	J324 2865	4			+.015"
					1986
	3300 2522	4			Standard
	3300 2522	4			+.003"
	3300 2733	4			+.015"
4					VALVE, Intake
	J324 2659	4			Standard
	J324 2670	4			+.003"
	J324 2671	4			+.015"
5					VALVE, Exhaust
	J324 2896	4			Standard
	J324 2673	4			+.003"
	J324 2674	4			+.015"
6	J324 2661	8			RETAINER
7					DEFLECTOR ***
					1983
	J324 2864	4			Standard
	J324 2864	4			+.003"
	J324 2865	4			+.015"
					1984
	J324 2891	4			Standard
	J324 2892	4			+.015"
					1985
	J324 2891	4			Standard
	J324 2891	4			+.003"
	J324 2892	4			+.015"
					1986
	3300 2729	4			Standard
	3300 2729	4			+.003"
	3300 3016	4			+.015"
8	J324 2664	16			KEEPER ***
9	J324 2678	8			SPRING
10	J324 1709	8			PUSHROD ***

MODEL CODES

16=Cherokee 2 Dr.(1981-83)
17=Cherokee 2 Dr.(1981-83)
73=Cherokee 2WD-2 Dr.(1984-86)
74=Cherokee 2WD-4 Dr.(1984-86)
18=Cherokee 4 Dr.(1981-83)
77=Cherokee 4WD-2 Dr.(1984-86)
78=Cherokee 4WD-4 Dr.(1984-86)
85=CJ-5 (1981-83)
86=CJ-6(1981)
87=CJ-7(1981-86)
88=CJ-8, Scrambler(1981-86)
64=Comanche 2WD-6 Ft. Box(1986)
66=Comanche 2WD-7 Ft. Box(1986)
63=Comanche 4WD-6 Ft. Box(1986)
65=Comanche 4WD-7 Ft. Box(1986)
15=Grand Wagoneer 4 Dr.(1984-86)
25=J-10 Truck 7 Ft. Box(1981-84)
26=J10 Truck 8 Ft. Box(1981-86)
27=J-20 Truck 8 Ft. Box(1981-86)
15=Wagoneer 4 Dr.(1981-83)
75=Wagoneer 4WD-4 Dr.(1984-86)

BODY
CJ=CJ-5, CJ-6, CJ-7, CJ-8, Scrambler(1981-86)
MJ=Comanche Pickup(1986)

STYLES
SJ=Wagoneer(1981-83), Grand Wagoneer(1984-86), Cherokee(1981-83), J-10, J-20(1981-86)
XJ=Wagoneer(1984-86), Cherokee(1984-86)

AR = Use as Required - = Non Illustrated Part P.A.R. = Paint as Required

« RETURN TO GROUP INDEX »

CAMSHAFT AND VALVES 1983-86 AMC FOUR CYLINDER CJ-7,8, SCRAMBLER
Figure 9A-3300

81J58 3300

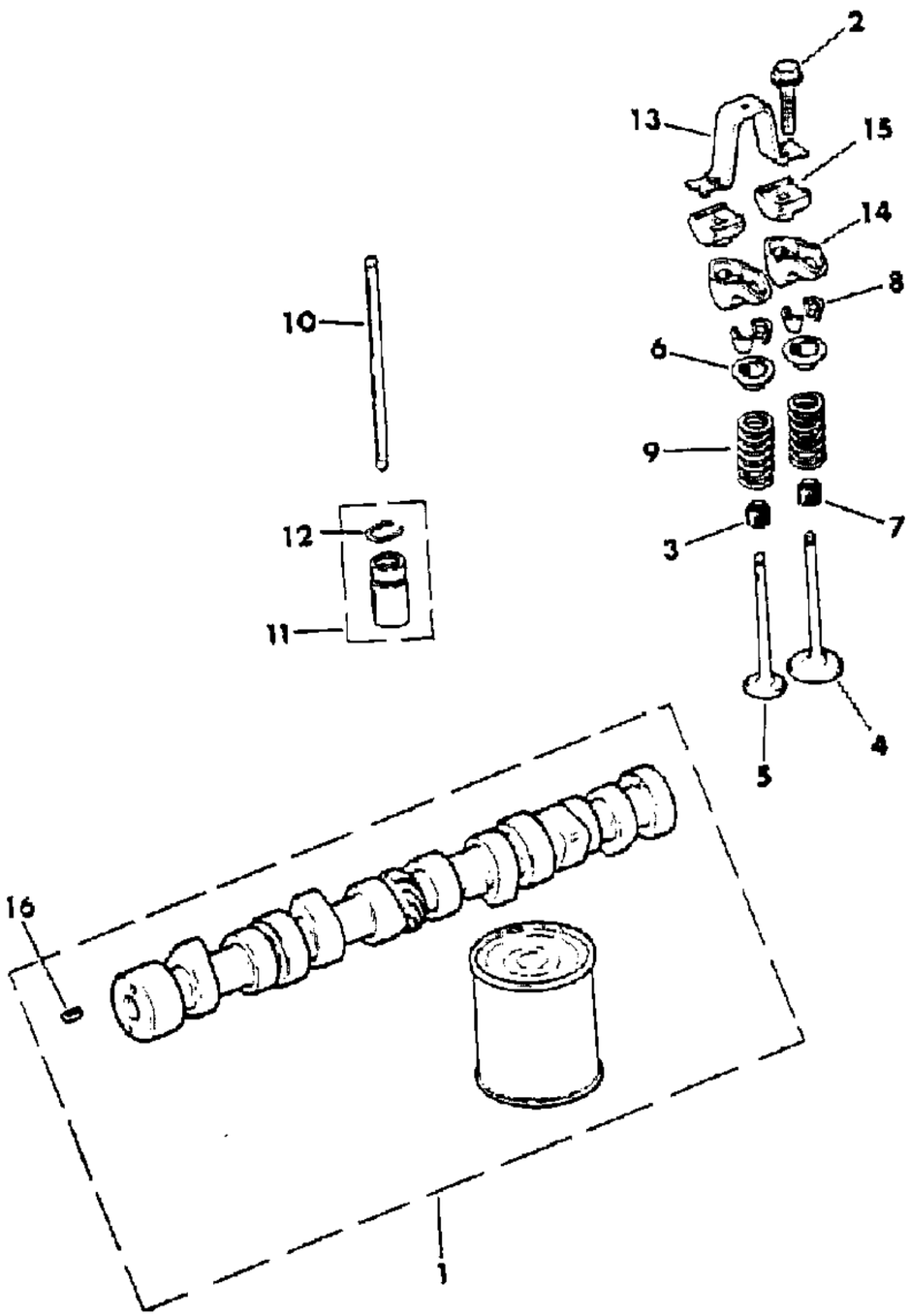

ITEM	PART NUMBER	QTY	BODY	MODEL	DESCRIPTION
11	J318 9883	8			TAPPET
12	J644 0614	8			RING
13	J323 6513	4			BRIDGE ***
14	J324 2393	8			ARM, Valve Rocket
15	J323 5090	8			PIVOT
16	J045 6384	1			PIN

MODEL CODES

16=Cherokee 2 Dr.(1981-83)
17=Cherokee 2 Dr.(1981-83)
73=Cherokee 2WD-2 Dr.(1984-86)
74=Cherokee 2WD-4 Dr.(1984-86)
18=Cherokee 4 Dr.(1981-83)
77=Cherokee 4WD-2 Dr.(1984-86)
78=Cherokee 4WD-4 Dr.(1984-86)
85=CJ-5 (1981-83)
86=CJ-6(1981)
87=CJ-7(1981-86)
88=CJ-8, Scrambler(1981-86)
64=Comanche 2WD-6 Ft. Box(1986)
66=Comanche 2WD-7 Ft. Box(1986)
63=Comanche 4WD-6 Ft. Box(1986)
65=Comanche 4WD-7 Ft. Box(1986)
15=Grand Wagoneer 4 Dr.(1984-86)
25=J-10 Truck 7 Ft. Box(1981-84)
26=J10 Truck 8 Ft. Box(1981-86)
27=J-20 Truck 8 Ft. Box(1981-86)
15=Wagoneer 4 Dr.(1981-83)
75=Wagoneer 4WD-4 Dr.(1984-86)

BODY
CJ=CJ-5, CJ-6, CJ-7, CJ-8, Scrambler(1981-86)
MJ=Comanche Pickup(1986)

STYLES
SJ=Wagoneer(1981-83), Grand Wagoneer(1984-86), Cherokee(1981-83), J-10, J-20(1981-86)
XJ=Wagoneer(1984-86), Cherokee(1984-86)

AR = Use as Required - = Non Illustrated Part P.A.R. = Paint as Required

« RETURN TO GROUP INDEX

TIMING COVER 1983-86 AMC FOUR CYLINDER CJ-7,8, SCRAMBLER
Figure 9A-3400

81J58 3400

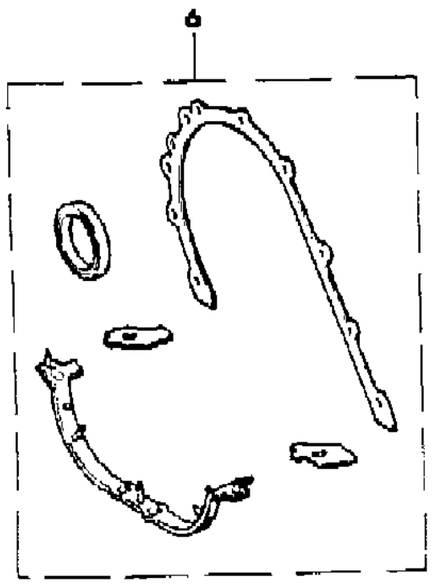

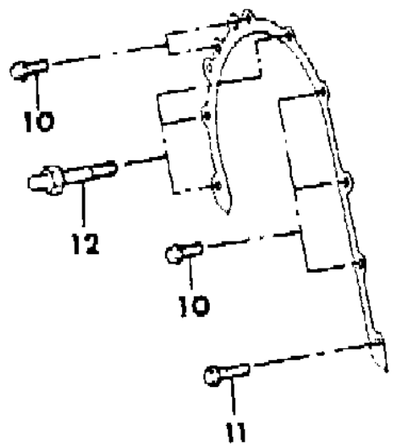

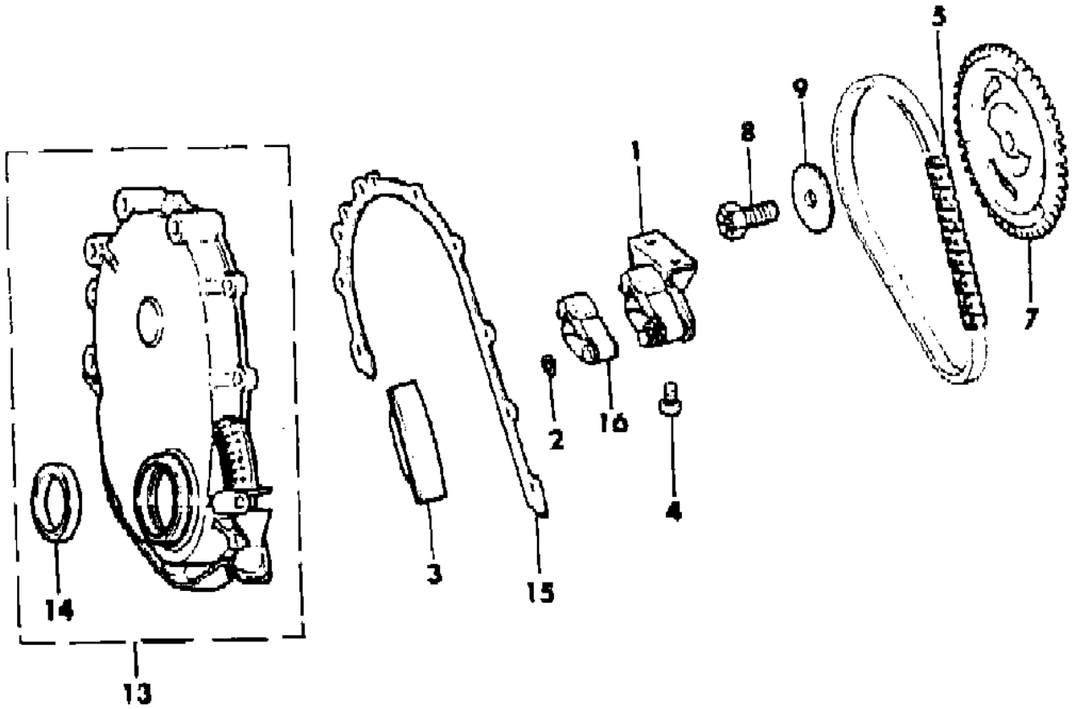

ITEM	PART NUMBER	QTY	BODY	MODEL	DESCRIPTION
1	J324 2614	1			BRACKET
2	S941 3523	1			RING
3	J324 2617	1			BUMPER
4	J400 6708	2			SCREW
5	J324 2300	1			CHAIN, Timing
6	J812 9097	1			GASKET PACKAGE
7	J324 2280	1			SPROCKET, Camshaft
8	J317 2308	1			BOLT
9	J317 3284	1			WASHER
10	J400 6906	5			BOLT
11	6034 914	1			BOLT
12	J400 7154	3			BOLT, Stud
13	J324 3096	1			COVER, Timing Case
14	3300 4681	1			SEAL
15	J322 5187	1			GASKET
16	J324 2630	1			TENSIONER

MODEL CODES

16=Cherokee 2 Dr.(1981-83)
17=Cherokee 2 Dr.(1981-83)
73=Cherokee 2WD-2 Dr.(1984-86)
74=Cherokee 2WD-4 Dr.(1984-86)
18=Cherokee 4 Dr.(1981-83)
77=Cherokee 4WD-2 Dr.(1984-86)
78=Cherokee 4WD-4 Dr.(1984-86)
85=CJ-5 (1981-83)
86=CJ-6(1981)
87=CJ-7(1981-86)
88=CJ-8, Scrambler(1981-86)
64=Comanche 2WD-6 Ft. Box(1986)
66=Comanche 2WD-7 Ft. Box(1986)
63=Comanche 4WD-6 Ft. Box(1986)
65=Comanche 4WD-7 Ft. Box(1986)
15=Grand Wagoneer 4 Dr.(1984-86)
25=J-10 Truck 7 Ft. Box(1981-84)
26=J10 Truck 8 Ft. Box(1981-86)
27=J-20 Truck 8 Ft. Box(1981-86)
15=Wagoneer 4 Dr.(1981-83)
75=Wagoneer 4WD-4 Dr.(1984-86)

BODY
CJ=CJ-5, CJ-6, CJ-7, CJ-8, Scrambler(1981-86)
MJ=Comanche Pickup(1986)

STYLES
SJ=Wagoneer(1981-83), Grand Wagoneer(1984-86), Cherokee(1981-83), J-10, J-20(1981-86)
XJ=Wagoneer(1984-86), Cherokee(1984-86)

AR = Use as Required - = Non Illustrated Part P.A.R. = Paint as Required

« RETURN TO GROUP INDEX

ENGINE OILING 1983-86 AMC FOUR CYLINDER CJ-7,8, SCRAMBLER
Figure 9A-3500

81J58 3500

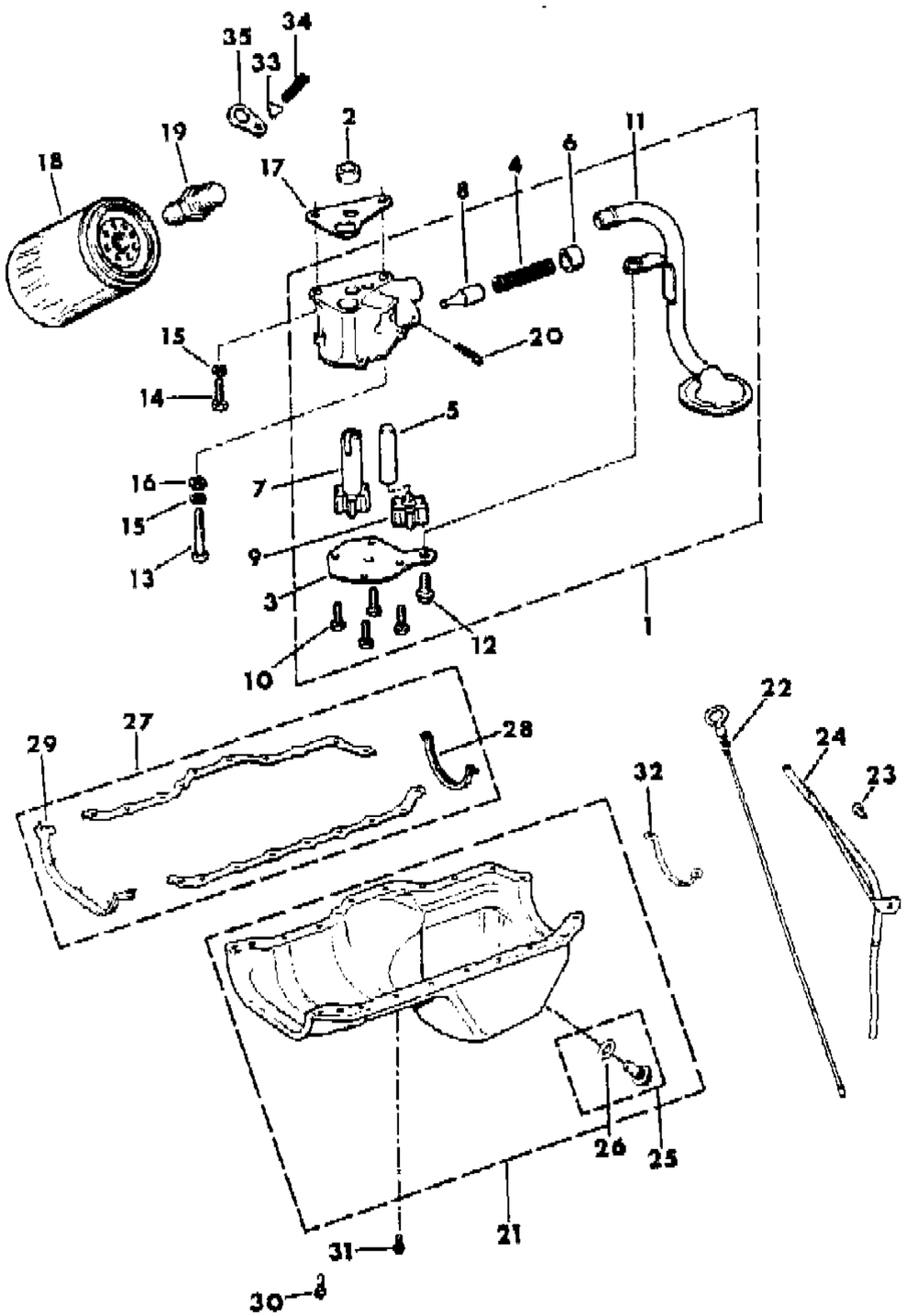

ITEM	PART NUMBER	QTY	BODY	MODEL	DESCRIPTION
1					PUMP, Engine Oil
	J324 1399	1			1983-85
	J324 3102	1			1986
2	J400 5149	1			PIN
3	J324 1733	1			COVER, Oil Pump
4	J323 9668	1			SPRING
5	J317 1956	1			SHAFT, Oil Pump Gear
6	J317 1958	1			RETAINER
7	J317 2334	1			GEAR, Oil Pump Drive
8					PLUNGER
	J318 8661	1			Standard
	J324 1676	1			+.010"
9	J319 6843	1			GEAR, Oil Pump Driven
10	J812 2990	4			SCREW
11					TUBE, Oil Pump Inlet
	J324 1617	1			1983-85
	J324 3111	1			1986
12	J400 6909	1			BOLT
13	J943 7670	1			BOLT
14	S942 7934	1			BOLT
15	J012 0214	2			WASHER, Lock
16	J012 0393	1			WASHER
17	J317 2332	1			GASKET
18	J813 2313	1			FILTER, Engine Oil
19	J324 1335	1			CONNECTOR
20	S010 8635	1			PIN, Cotter
21					PAN, Engine Oil
	J324 3140	1			1983-85
	5302 0205	1			1986-93
22					INDICATOR, Engine Oil Level
	J324 1752	1			1983-85
	3300 2407	1			1986
23	J027 3573	1			BOLT
24	J324 1748	1			TUBE, Engine Oil Indicator
25					PLUG PACKAGE
	J813 2293	1			1983-84
	8350 1425	1			1985-86
26					GASKET
	3300 0322	1			1983-84

MODEL CODES
16=Cherokee 2 Dr.(1981-83)
17=Cherokee 2 Dr.(1981-83)
73=Cherokee 2WD-2 Dr.(1984-86)
74=Cherokee 2WD-4 Dr.(1984-86)
18=Cherokee 4 Dr.(1981-83)
77=Cherokee 4WD-2 Dr.(1984-86)
78=Cherokee 4WD-4 Dr.(1984-86)
85=CJ-5 (1981-83)
86=CJ-6(1981)
87=CJ-7(1981-86)
88=CJ-8, Scrambler(1981-86)
64=Comanche 2WD-6 Ft. Box(1986)
66=Comanche 2WD-7 Ft. Box(1986)
63=Comanche 4WD-6 Ft. Box(1986)
65=Comanche 4WD-7 Ft. Box(1986)
15=Grand Wagoneer 4 Dr.(1984-86)
25=J-10 Truck 7 Ft. Box(1981-84)
26=J10 Truck 8 Ft. Box(1981-86)
27=J-20 Truck 8 Ft. Box(1981-86)
15=Wagoneer 4 Dr.(1981-83)
75=Wagoneer 4WD-4 Dr.(1984-86)

BODY
CJ=CJ-5, CJ-6, CJ-7, CJ-8, Scrambler(1981-86)
MJ=Comanche Pickup(1986)

STYLES
SJ=Wagoneer(1981-83), Grand Wagoneer(1984-86), Cherokee(1981-83), J-10, J-20(1981-86)
XJ=Wagoneer(1984-86), Cherokee(1984-86)

AR = Use as Required - = Non Illustrated Part P.A.R. = Paint as Required

« RETURN TO GROUP INDEX »

ENGINE OILING 1983-86 AMC FOUR CYLINDER CJ-7,8, SCRAMBLER
Figure 9A-3500

81J58 3500

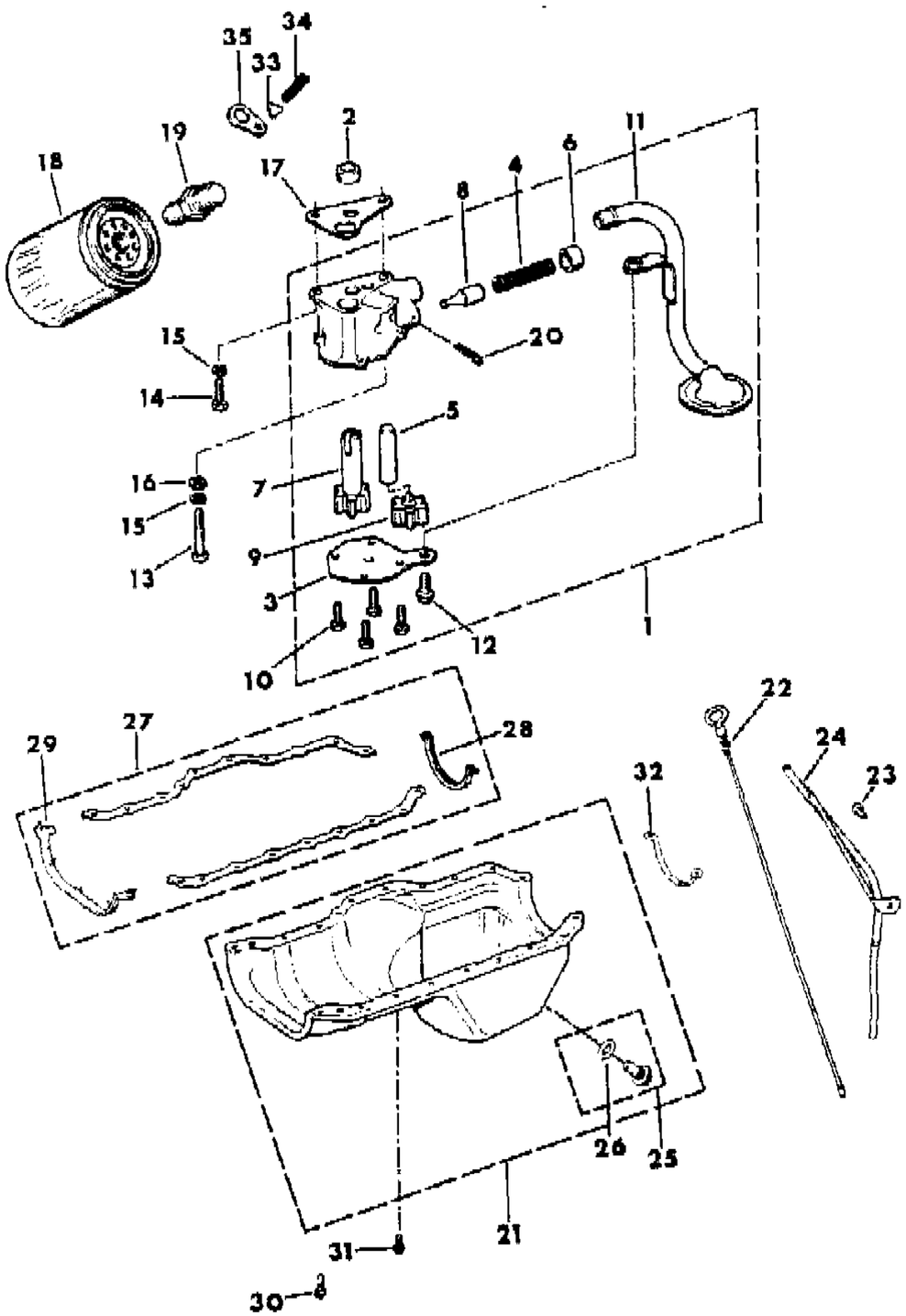

ITEM	PART NUMBER	QTY	BODY	MODEL	DESCRIPTION
	J324 3136	1			1985-86
27	8350 0270	1			GASKET PACKAGE
28	J324 1609	1			SEAL
29	J317 2848	1			SEAL
30	J400 6297	4			SCREW
31	J400 6296	17			SCREW
32	J324 3116	1			SUPPORT
33	J317 3203	1			VALVE
34	J317 3224	1			SPRING
35	J317 3225	1			RETAINER

MODEL CODES

16=Cherokee 2 Dr.(1981-83)
17=Cherokee 2 Dr.(1981-83)
73=Cherokee 2WD-2 Dr.(1984-86)
74=Cherokee 2WD-4 Dr.(1984-86)
18=Cherokee 4 Dr.(1981-83)
77=Cherokee 4WD-2 Dr.(1984-86)
78=Cherokee 4WD-4 Dr.(1984-86)
85=CJ-5 (1981-83)
86=CJ-6(1981)
87=CJ-7(1981-86)
88=CJ-8, Scrambler(1981-86)
64=Comanche 2WD-6 Ft. Box(1986)
66=Comanche 2WD-7 Ft. Box(1986)
63=Comanche 4WD-6 Ft. Box(1986)
65=Comanche 4WD-7 Ft. Box(1986)
15=Grand Wagoneer 4 Dr.(1984-86)
25=J-10 Truck 7 Ft. Box(1981-84)
26=J10 Truck 8 Ft. Box(1981-86)
27=J-20 Truck 8 Ft. Box(1981-86)
15=Wagoneer 4 Dr.(1981-83)
75=Wagoneer 4WD-4 Dr.(1984-86)

BODY
CJ=CJ-5, CJ-6, CJ-7, CJ-8, Scrambler(1981-86)
MJ=Comanche Pickup(1986)

STYLES
SJ=Wagoneer(1981-83), Grand Wagoneer(1984-86), Cherokee(1981-83), J-10, J-20(1981-86)
XJ=Wagoneer(1984-86), Cherokee(1984-86)

AR = Use as Required - = Non Illustrated Part P.A.R. = Paint as Required

« RETURN TO GROUP INDEX

MANIFOLD, INTAKE AND EXHAUST 1983-86 AMC FOUR CYLINDER CJ-7,8, SCRAMBLER
Figure 9A-3600

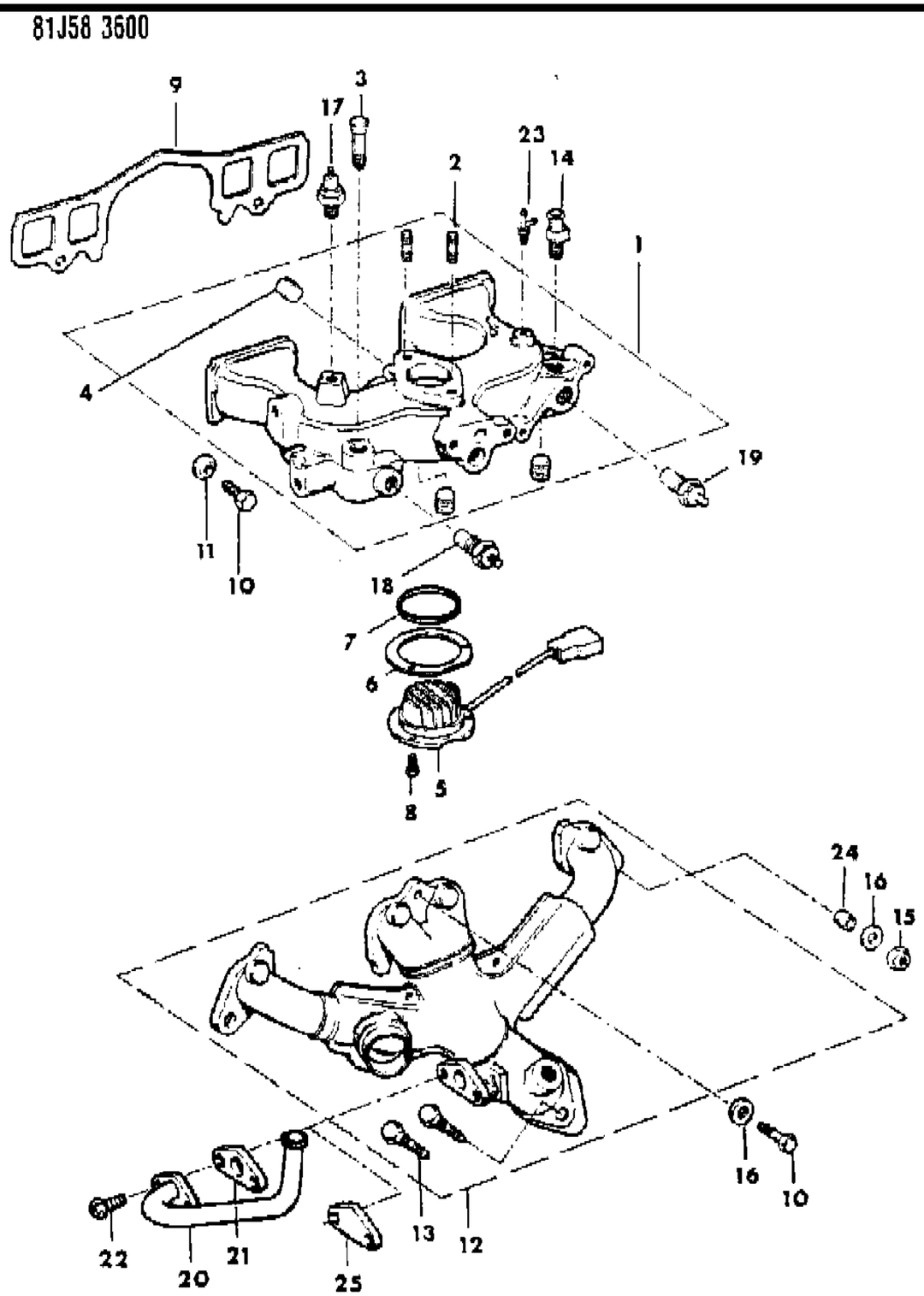

ITEM	PART NUMBER	QTY	BODY	MODEL	DESCRIPTION
1					MANIFOLD, Intake
	8350 0269	1			
	8350 1410	1			Less Exhaust Gas Recirculation, EXPORT, Non-Regulated Markets
2	J400 6957	2			STUD
3	J314 2368	1			NIPPLE
4					PLUG
	S940 9961	3			Without EXPORT
	J044 4660	1			EXPORT
5	3300 2466	1			HEATER, Early Fuel Evaporation
6	J323 8909	1			GASKET
7	J420 0431	1			O-RING
8	J018 0016	3			BOLT
9	J324 2854	1			GASKET
10	J018 6622	5			BOLT
11	J318 9219	4			WASHER, Clamp
12					MANIFOLD, Exhaust
	J324 2625	1			1983-85
	4713 055	1			1986
13	J400 7109	2			STUD
14	5300 0680	1			FITTING, Cold Temp Switch
15	J314 9892	2			NUT
16	J317 3077	3			WASHER
17	5300 0300	1			SENSOR, Knock
18					SWITCH, Coolant Temp FFB, Front
	J324 2318	1			1983
	3300 1979	1			1984-86
19	J324 2321	1			SWITCH, Early Fuel Evaporation, Rear
20	J324 1651	1			TUBE, EGR
21	J324 1652	1			GASKET
22	J400 6985	2			BOLT
23	3300 1089	1			FITTING, Vacuum
24	3300 3332	2			SPACER
25	J324 2583	1			COVER, EXPORT, Non-Regulated Markets

MODEL CODES
16=Cherokee 2 Dr.(1981-83)
17=Cherokee 2 Dr.(1981-83)
73=Cherokee 2WD-2 Dr.(1984-86)
74=Cherokee 2WD-4 Dr.(1984-86)
18=Cherokee 4 Dr.(1981-83)
77=Cherokee 4WD-2 Dr.(1984-86)
78=Cherokee 4WD-4 Dr.(1984-86)
85=CJ-5 (1981-83)
86=CJ-6(1981)
87=CJ-7(1981-86)
88=CJ-8, Scrambler(1981-86)
64=Comanche 2WD-6 Ft. Box(1986)
66=Comanche 2WD-7 Ft. Box(1986)
63=Comanche 4WD-6 Ft. Box(1986)
65=Comanche 4WD-7 Ft. Box(1986)
15=Grand Wagoneer 4 Dr.(1984-86)
25=J-10 Truck 7 Ft. Box(1981-84)
26=J10 Truck 8 Ft. Box(1981-86)
27=J-20 Truck 8 Ft. Box(1981-86)
15=Wagoneer 4 Dr.(1981-83)
75=Wagoneer 4WD-4 Dr.(1984-86)

BODY
CJ=CJ-5, CJ-6, CJ-7, CJ-8, Scrambler(1981-86)
MJ=Comanche Pickup(1986)

STYLES
SJ=Wagoneer(1981-83), Grand Wagoneer(1984-86), Cherokee(1981-83), J-10, J-20(1981-86)
XJ=Wagoneer(1984-86), Cherokee(1984-86)

AR = Use as Required - = Non Illustrated Part P.A.R. = Paint as Required

« RETURN TO GROUP INDEX

ENGINE MOUNTING 1983-86 AMC FOUR CYLINDER CJ-7,8, SCRAMBLER
Figure 9A-3700

81J58 3700

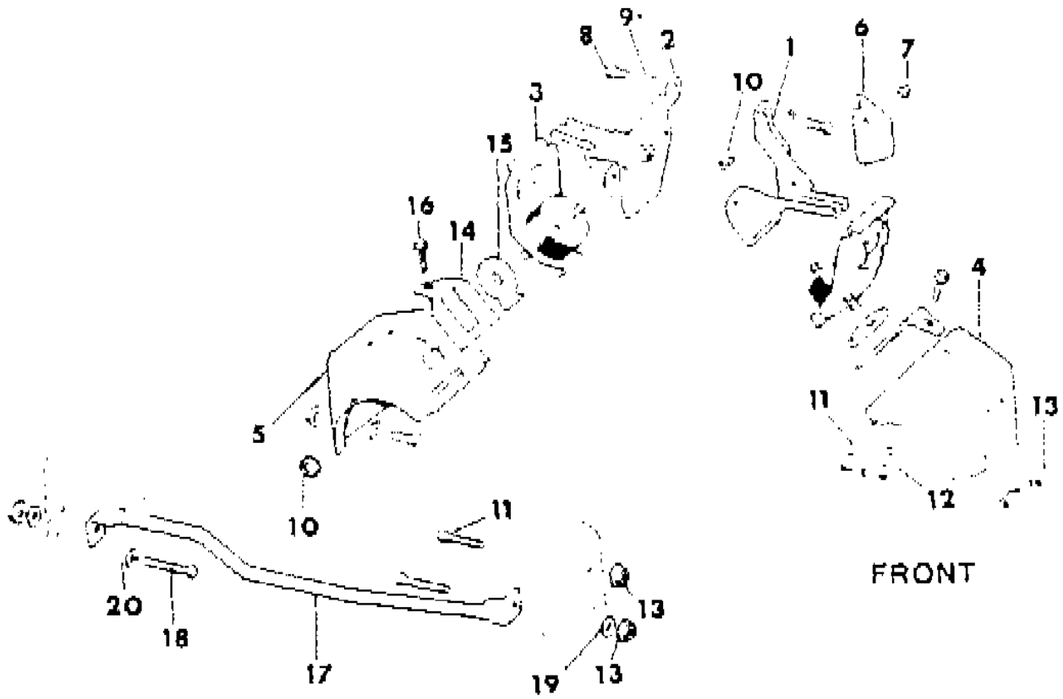

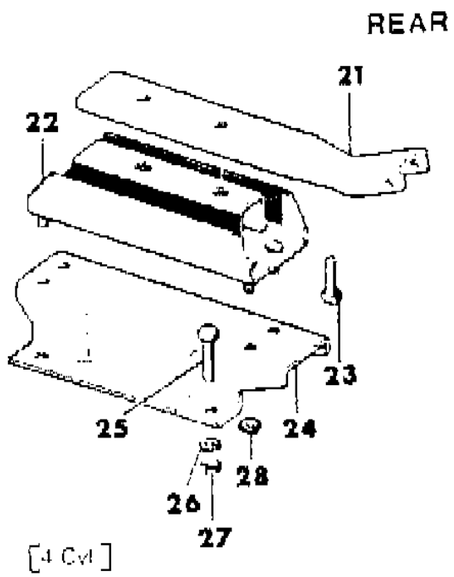

W/AUTOMATIC TRANSMISSION

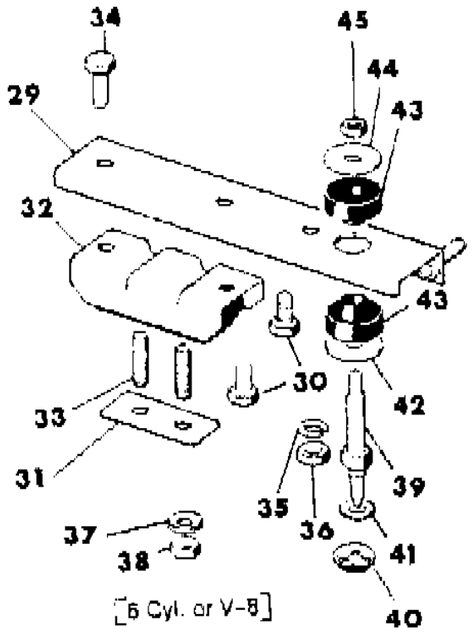

W/MANUAL TRANSMISSION

ITEM	PART NUMBER	QTY	BODY	MODEL	DESCRIPTION
1	J536 4674	1			BRACKET, Engine, Left
2	J536 4675	1			BRACKET, Engine, Right
3	J536 1829	2			MOUNT, Engine ***
4	J535 9855	1			BRACKET, Left
5	J536 4677	1			BRACKET, Right
6	J325 1318	1			SHIELD, Heat
7	J942 6241	1			BOLT
8	1150 2655	6			BOLT
9	1150 0192	6			WASHER, Lock
10	J400 4005	4			NUT
11					BOLT
	S018 1650	AR			2.50"
	S018 1651	AR			2.75"
	S018 1652	AR			3.00"
12					WASHER
	J400 1761	AR			Plain
	J012 0382	AR			Lock
13	J941 1783	AR			NUT, Lock
14	J535 9877	AR			SHIM ***
15	J537 0015	2			WASHER
16	J400 1933	AR			BOLT
17	J535 8188	1			BAR, Tie, With Heavy Duty Suspension
18	S942 5367	2			BOLT
19	J400 1761	2			WASHER, Plain
20	J400 1829	2			WASHER
21	J536 2511	1			BRACKET
22	J323 8013	1			INSULATOR
23	J400 6110	2			BOLT
24	J536 2482	1			PLATE
25	J018 0147	2			BOLT
26	J012 0383	2			WASHER
27	J027 1501	2			NUT
28	J400 7045	4			NUT
29	J536 3750	1			BRACKET
30	J400 6110	2			BOLT
31	J536 1885	1			SPACER
32	J137 0910	1			INSULATOR
33	J400 4819	2			STUD
34	J018 0145	1			BOLT

MODEL CODES
16=Cherokee 2 Dr.(1981-83)
17=Cherokee 2 Dr.(1981-83)
73=Cherokee 2WD-2 Dr.(1984-86)
74=Cherokee 2WD-4 Dr.(1984-86)
18=Cherokee 4 Dr.(1981-83)
77=Cherokee 4WD-2 Dr.(1984-86)
78=Cherokee 4WD-4 Dr.(1984-86)
85=CJ-5 (1981-83)
86=CJ-6(1981)
87=CJ-7(1981-86)
88=CJ-8, Scrambler(1981-86)
64=Comanche 2WD-6 Ft. Box(1986)
66=Comanche 2WD-7 Ft. Box(1986)
63=Comanche 4WD-6 Ft. Box(1986)
65=Comanche 4WD-7 Ft. Box(1986)
15=Grand Wagoneer 4 Dr.(1984-86)
25=J-10 Truck 7 Ft. Box(1981-84)
26=J10 Truck 8 Ft. Box(1981-86)
27=J-20 Truck 8 Ft. Box(1981-86)
15=Wagoneer 4 Dr.(1981-83)
75=Wagoneer 4WD-4 Dr.(1984-86)

BODY
CJ=CJ-5, CJ-6, CJ-7, CJ-8, Scrambler(1981-86)
MJ=Comanche Pickup(1986)

STYLES
SJ=Wagoneer(1981-83), Grand Wagoneer(1984-86), Cherokee(1981-83), J-10, J-20(1981-86)
XJ=Wagoneer(1984-86), Cherokee(1984-86)

AR = Use as Required - = Non Illustrated Part P.A.R. = Paint as Required

« RETURN TO GROUP INDEX »

ENGINE MOUNTING 1983-86 AMC FOUR CYLINDER CJ-7,8, SCRAMBLER
Figure 9A-3700

81J58 3700

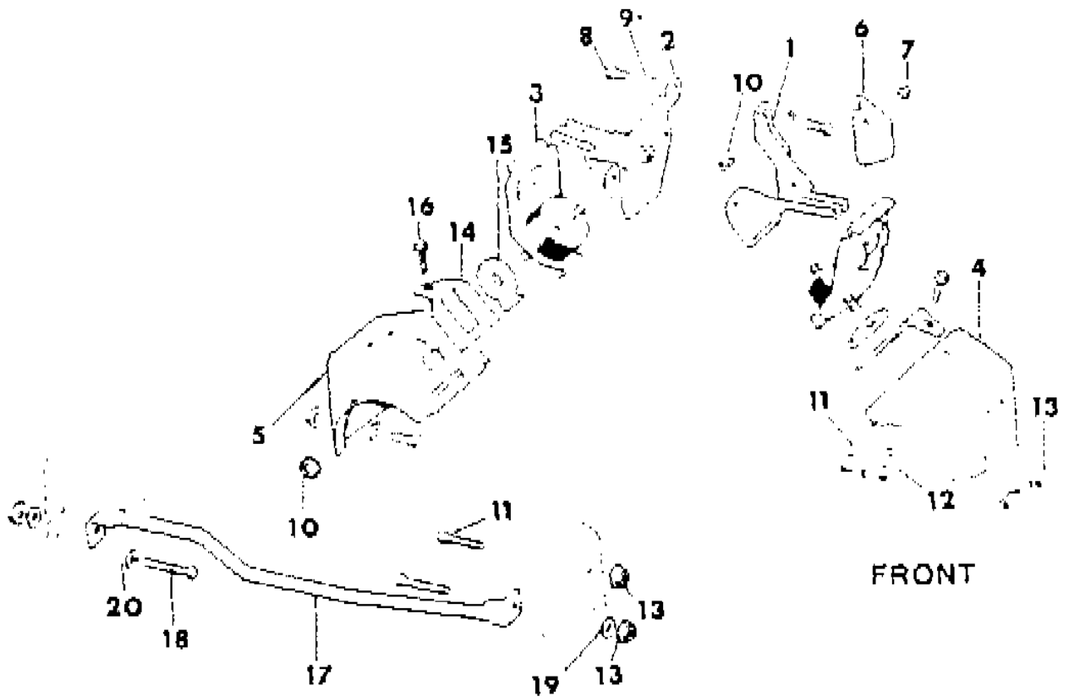

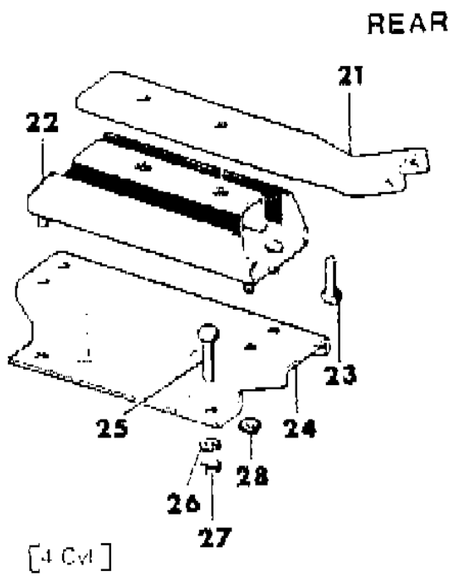

W/AUTOMATIC TRANSMISSION

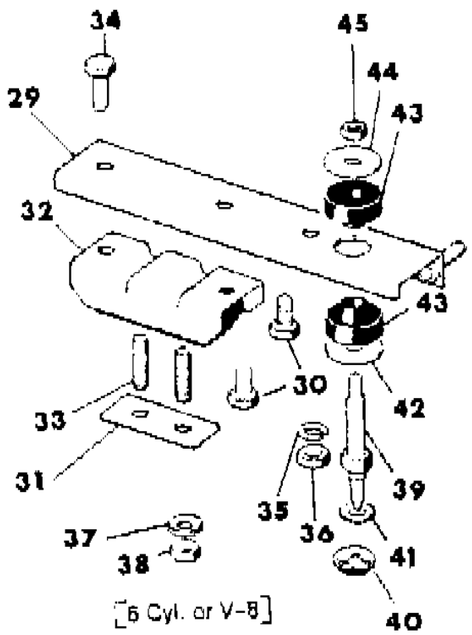

W/MANUAL TRANSMISSION

ITEM	PART NUMBER	QTY	BODY	MODEL	DESCRIPTION
35	J012 0383	1			WASHER
36	J027 1501	1			NUT
37	J400 1120	2			WASHER
38	J941 3215	2			NUT
39	J535 8879	1			STUD
40	J941 1783	1			NUT
41	J400 1134	1			WASHER
42	J094 1399	1			WASHER
43	J094 5266	2			INSULATOR
44	J094 5269	1			WASHER
45	J941 1783	1			NUT

MODEL CODES
16=Cherokee 2 Dr.(1981-83)
17=Cherokee 2 Dr.(1981-83)
73=Cherokee 2WD-2 Dr.(1984-86)
74=Cherokee 2WD-4 Dr.(1984-86)
18=Cherokee 4 Dr.(1981-83)
77=Cherokee 4WD-2 Dr.(1984-86)
78=Cherokee 4WD-4 Dr.(1984-86)
85=CJ-5 (1981-83)
86=CJ-6(1981)
87=CJ-7(1981-86)
88=CJ-8, Scrambler(1981-86)
64=Comanche 2WD-6 Ft. Box(1986)
66=Comanche 2WD-7 Ft. Box(1986)
63=Comanche 4WD-6 Ft. Box(1986)
65=Comanche 4WD-7 Ft. Box(1986)
15=Grand Wagoneer 4 Dr.(1984-86)
25=J-10 Truck 7 Ft. Box(1981-84)
26=J10 Truck 8 Ft. Box(1981-86)
27=J-20 Truck 8 Ft. Box(1981-86)
15=Wagoneer 4 Dr.(1981-83)
75=Wagoneer 4WD-4 Dr.(1984-86)

BODY
CJ=CJ-5, CJ-6, CJ-7, CJ-8, Scrambler(1981-86)
MJ=Comanche Pickup(1986)

STYLES
SJ=Wagoneer(1981-83), Grand Wagoneer(1984-86), Cherokee(1981-83), J-10, J-20(1981-86)
XJ=Wagoneer(1984-86), Cherokee(1984-86)

AR = Use as Required - = Non Illustrated Part P.A.R. = Paint as Required

ENGINE, FOUR CYLINDER XJ CHEROKEE, WAGONEER COMANCHE
Figure 9A-3800

81J58 3800

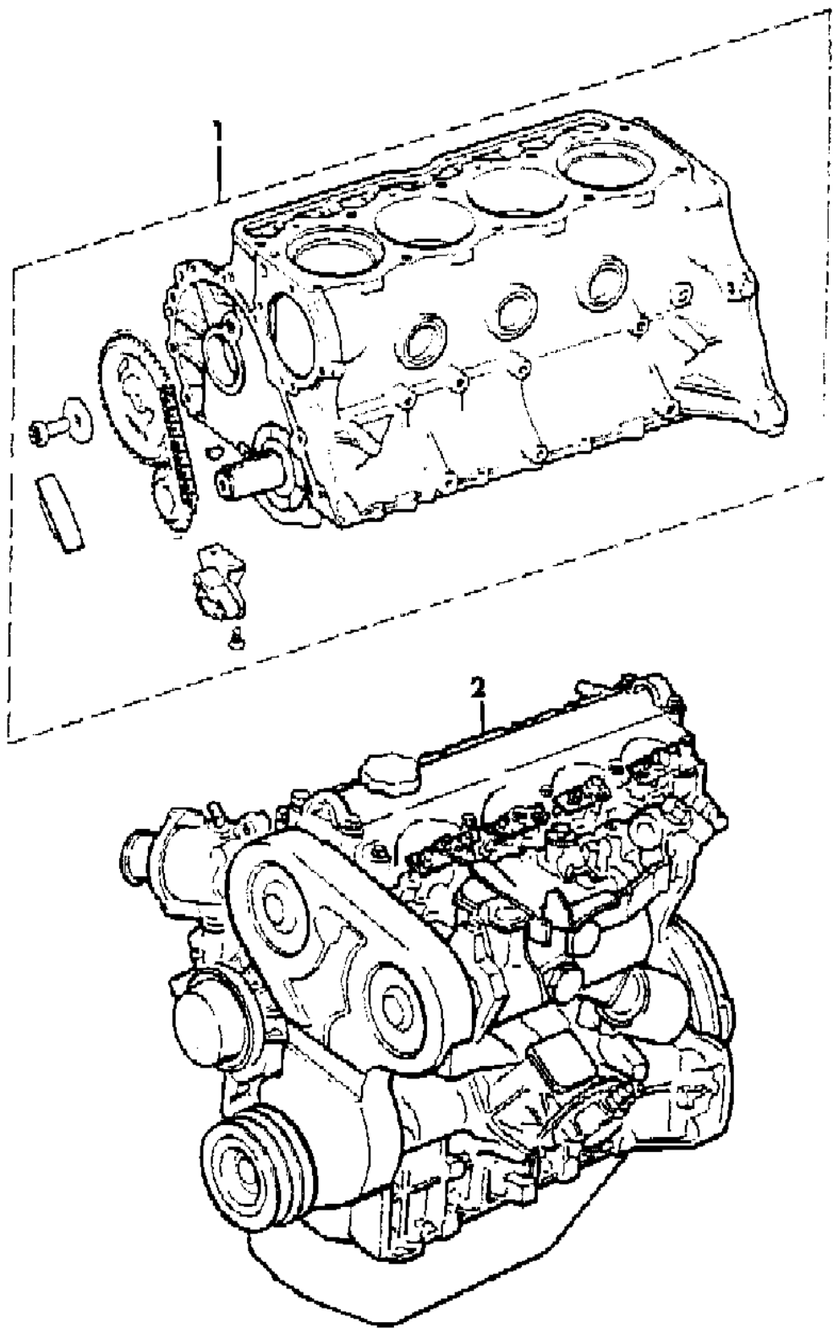

ITEM	PART NUMBER	QTY	BODY	MODEL	DESCRIPTION
1					ENGINE, Short, Gas, Less Camshaft
	8350 0245	1			1984-85
	8350 2499	1			1986
2					ENGINE, Diesel, Less Turbo
	T146 3606	1			With Manual Transmission
	T146 3972	1			With Automatic Transmission

MODEL CODES
16=Cherokee 2 Dr.(1981-83)
17=Cherokee 2 Dr.(1981-83)
73=Cherokee 2WD-2 Dr.(1984-86)
74=Cherokee 2WD-4 Dr.(1984-86)
18=Cherokee 4 Dr.(1981-83)
77=Cherokee 4WD-2 Dr.(1984-86)
78=Cherokee 4WD-4 Dr.(1984-86)
85=CJ-5 (1981-83)
86=CJ-6(1981)
87=CJ-7(1981-86)
88=CJ-8, Scrambler(1981-86)
64=Comanche 2WD-6 Ft. Box(1986)
66=Comanche 2WD-7 Ft. Box(1986)
63=Comanche 4WD-6 Ft. Box(1986)
65=Comanche 4WD-7 Ft. Box(1986)
15=Grand Wagoneer 4 Dr.(1984-86)
25=J-10 Truck 7 Ft. Box(1981-84)
26=J10 Truck 8 Ft. Box(1981-86)
27=J-20 Truck 8 Ft. Box(1981-86)
15=Wagoneer 4 Dr.(1981-83)
75=Wagoneer 4WD-4 Dr.(1984-86)

BODY
CJ=CJ-5, CJ-6, CJ-7, CJ-8, Scrambler(1981-86)
MJ=Comanche Pickup(1986)

STYLES
SJ=Wagoneer(1981-83), Grand Wagoneer(1984-86), Cherokee(1981-83), J-10, J-20(1981-86)
XJ=Wagoneer(1984-86), Cherokee(1984-86)

AR = Use as Required - = Non Illustrated Part P.A.R. = Paint as Required

« RETURN TO GROUP INDEX

BLOCK, ENGINE 1985-86 RENAULT DIESEL XJ CHEROKEE, XJ WAGONEER, COMANCHE
Figure 9A-3900

81J58 3900

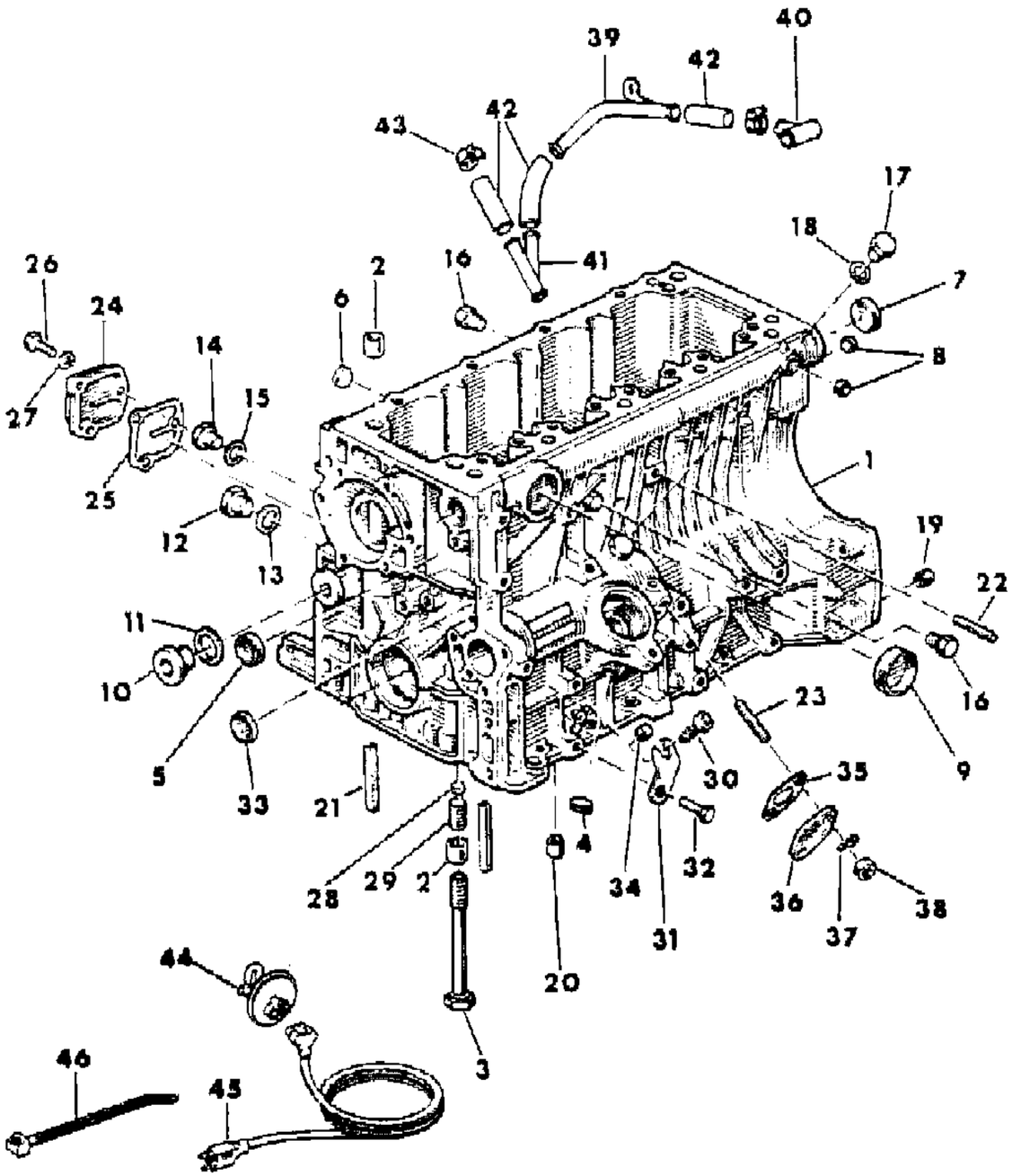

ITEM	PART NUMBER	QTY	BODY	MODEL	DESCRIPTION
1					BLOCK, Engine
	T146 3298	1			Up to Engine Serial #3800
	T146 3647	1			After Engine Serial #3800
2	T501 0061	AR			PIN
3	T058 9081	10			BOLT
4					PLUG
	T307 5032	1			10mm
	T307 5138	1			12mm
5	T307 5070	1			PLUG
6	T307 5018	1			PLUG
7	T307 5034	1			PLUG
8	T307 5039	2			PLUG
9	T307 5044	1			PLUG
10	T307 5137	2			PLUG
11	T306 2015	2			GASKET
12	J307 5076	1			PLUG
13	J306 2014	1			GASKET
14	T307 5025	1			PLUG
15	T306 1028	1			GASKET
16	T307 5009	2			PLUG
17	T307 5029	1			PLUG
18	T306 2013	1			GASKET
19	T501 0126	AR			PIN
20	J501 0006	AR			PIN
21					SEAL
	T134 9381	AR			5.10mm Width
	T134 9382	AR			5.40mm Width
22	T302 7130	1			STUD
23	T302 7138	2			STUD
24	T067 7302	1			COVER, Engine Block Side, Right
25	T066 3306	1			GASKET
26	T300 1236	3			BOLT
27	T305 5031	3			WASHER
28	T502 7023	AR			SEAL
29	T307 5118	1			PLUG
30	T489 5580	1			PLUG
31	T426 3080	1			RETAINER
32	T300 1160	1			BOLT
33	T307 5015	1			PLUG

MODEL CODES
16=Cherokee 2 Dr.(1981-83)
17=Cherokee 2 Dr.(1981-83)
73=Cherokee 2WD-2 Dr.(1984-86)
74=Cherokee 2WD-4 Dr.(1984-86)
18=Cherokee 4 Dr.(1981-83)
77=Cherokee 4WD-2 Dr.(1984-86)
78=Cherokee 4WD-4 Dr.(1984-86)
85=CJ-5 (1981-83)
86=CJ-6(1981)
87=CJ-7(1981-86)
88=CJ-8, Scrambler(1981-86)
64=Comanche 2WD-6 Ft. Box(1986)
66=Comanche 2WD-7 Ft. Box(1986)
63=Comanche 4WD-6 Ft. Box(1986)
65=Comanche 4WD-7 Ft. Box(1986)
15=Grand Wagoneer 4 Dr.(1984-86)
25=J-10 Truck 7 Ft. Box(1981-84)
26=J10 Truck 8 Ft. Box(1981-86)
27=J-20 Truck 8 Ft. Box(1981-86)
15=Wagoneer 4 Dr.(1981-83)
75=Wagoneer 4WD-4 Dr.(1984-86)

BODY
CJ=CJ-5, CJ-6, CJ-7, CJ-8, Scrambler(1981-86)
MJ=Comanche Pickup(1986)

STYLES
SJ=Wagoneer(1981-83), Grand Wagoneer(1984-86), Cherokee(1981-83), J-10, J-20(1981-86)
XJ=Wagoneer(1984-86), Cherokee(1984-86)

AR = Use as Required - = Non Illustrated Part P.A.R. = Paint as Required

BLOCK, ENGINE 1985-86 RENAULT DIESEL XJ CHEROKEE, XJ WAGONEER, COMANCHE
Figure 9A-3900

81J58 3900

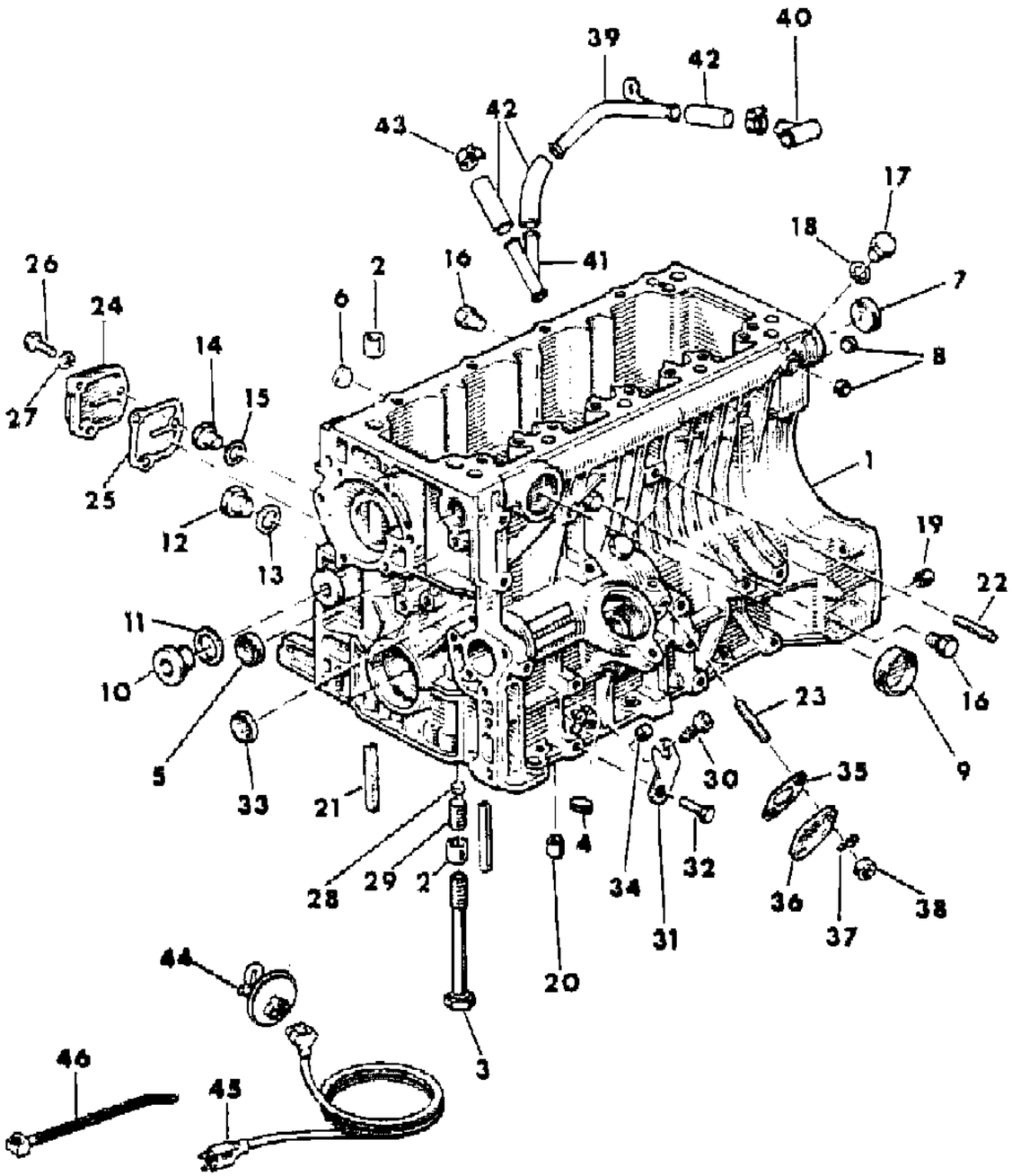

ITEM	PART NUMBER	QTY	BODY	MODEL	DESCRIPTION
34	T307 5067	1			PLUG
35	T306 5088	1			GASKET
36	T066 9805	1			COVER, Engine Block Side, Left
37	J305 7005	2			WASHER
38	J303 2018	2			NUT
39	5300 3925	1			TUBE, Engine Oil Drain
40	T072 7942	1			TEE, Oil Drain Upper
41	T072 7945	1			TEE, Oil Drain Lower
42	5300 3934	2			HOSE
43	J320 3076	4			CLAMP
44	3300 1361	1			HEATER, Engine Block
45	5600 0828	1			CORD, Power Supply
46					STRAP
	J322 3227	AR			200mm
	J369 3058	AR			300mm
	J323 0270	AR			350mm
	J323 5187	AR			450mm

MODEL CODES

16=Cherokee 2 Dr.(1981-83)
17=Cherokee 2 Dr.(1981-83)
73=Cherokee 2WD-2 Dr.(1984-86)
74=Cherokee 2WD-4 Dr.(1984-86)
18=Cherokee 4 Dr.(1981-83)
77=Cherokee 4WD-2 Dr.(1984-86)
78=Cherokee 4WD-4 Dr.(1984-86)
85=CJ-5 (1981-83)
86=CJ-6(1981)
87=CJ-7(1981-86)
88=CJ-8, Scrambler(1981-86)
64=Comanche 2WD-6 Ft. Box(1986)
66=Comanche 2WD-7 Ft. Box(1986)
63=Comanche 4WD-6 Ft. Box(1986)
65=Comanche 4WD-7 Ft. Box(1986)
15=Grand Wagoneer 4 Dr.(1984-86)
25=J-10 Truck 7 Ft. Box(1981-84)
26=J10 Truck 8 Ft. Box(1981-86)
27=J-20 Truck 8 Ft. Box(1981-86)
15=Wagoneer 4 Dr.(1981-83)
75=Wagoneer 4WD-4 Dr.(1984-86)

BODY
CJ=CJ-5, CJ-6, CJ-7, CJ-8, Scrambler(1981-86)
MJ=Comanche Pickup(1986)

STYLES
SJ=Wagoneer(1981-83), Grand Wagoneer(1984-86), Cherokee(1981-83), J-10, J-20(1981-86)
XJ=Wagoneer(1984-86), Cherokee(1984-86)

AR = Use as Required - = Non Illustrated Part P.A.R. = Paint as Required

« RETURN TO GROUP INDEX

GASKET SET 1985-86 RENAULT DIESEL XJ CHEROKEE, XJ WAGONEER, COMANCHE
Figure 9A-4000

81J58 4000

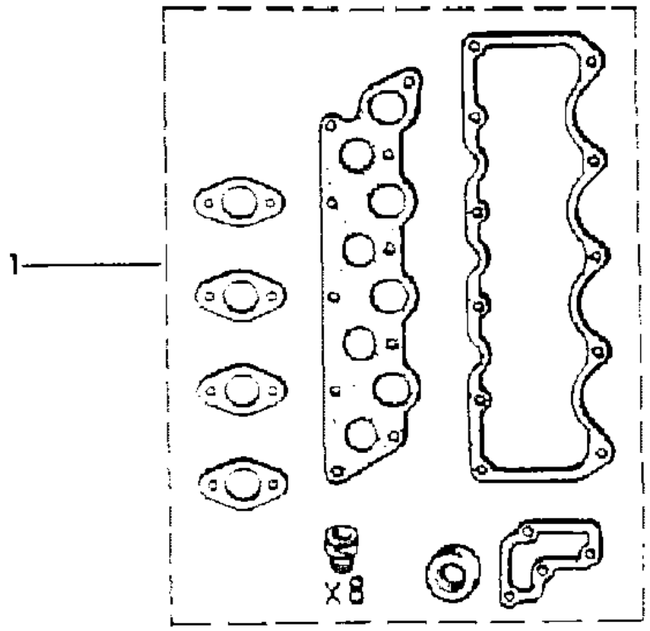

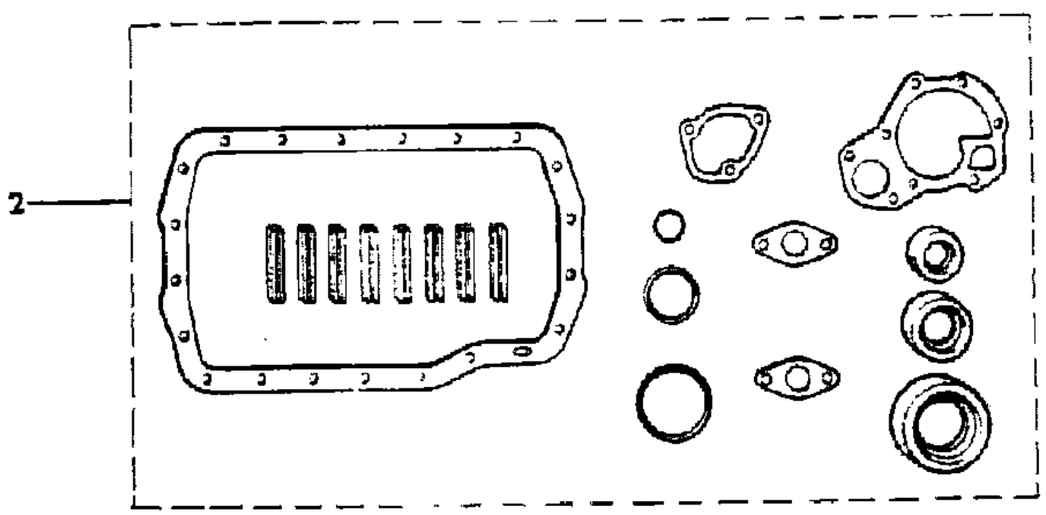

ITEM	PART NUMBER	QTY	BODY	MODEL	DESCRIPTION
1	T146 1765	1			GASKET PACKAGE, Engine Upper
2	T146 1334	1			GASKET PACKAGE, Engine Lower

MODEL CODES
16=Cherokee 2 Dr.(1981-83)
17=Cherokee 2 Dr.(1981-83)
73=Cherokee 2WD-2 Dr.(1984-86)
74=Cherokee 2WD-4 Dr.(1984-86)
18=Cherokee 4 Dr.(1981-83)
77=Cherokee 4WD-2 Dr.(1984-86)
78=Cherokee 4WD-4 Dr.(1984-86)
85=CJ-5 (1981-83)
86=CJ-6(1981)
87=CJ-7(1981-86)
88=CJ-8, Scrambler(1981-86)
64=Comanche 2WD-6 Ft. Box(1986)
66=Comanche 2WD-7 Ft. Box(1986)
63=Comanche 4WD-6 Ft. Box(1986)
65=Comanche 4WD-7 Ft. Box(1986)
15=Grand Wagoneer 4 Dr.(1984-86)
25=J-10 Truck 7 Ft. Box(1981-84)
26=J10 Truck 8 Ft. Box(1981-86)
27=J-20 Truck 8 Ft. Box(1981-86)
15=Wagoneer 4 Dr.(1981-83)
75=Wagoneer 4WD-4 Dr.(1984-86)

BODY
CJ=CJ-5, CJ-6, CJ-7, CJ-8, Scrambler(1981-86)
MJ=Comanche Pickup(1986)

STYLES
SJ=Wagoneer(1981-83), Grand Wagoneer(1984-86), Cherokee(1981-83), J-10, J-20(1981-86)
XJ=Wagoneer(1984-86), Cherokee(1984-86)

AR = Use as Required - = Non Illustrated Part P.A.R. = Paint as Required

« RETURN TO GROUP INDEX

CYLINDER HEAD 1985-86 RENAULT DIESEL XJ CHEROKEE, XJ WAGONEER, COMANCHE
Figure 9A-4100

81J58 4100

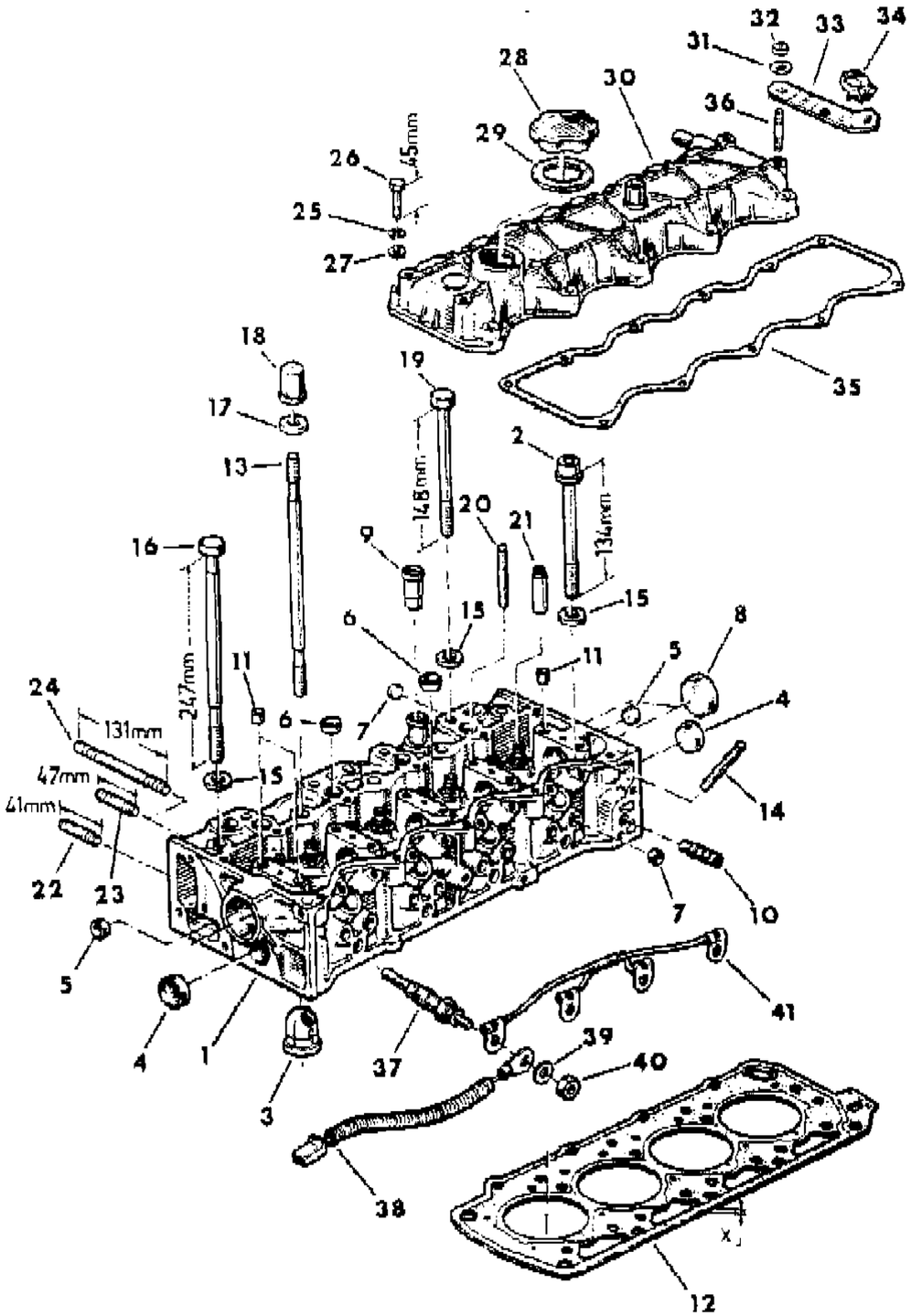

ITEM	PART NUMBER	QTY	BODY	MODEL	DESCRIPTION
1	T146 3380	1			HEAD, Engine
2	T067 5865	AR			BOLT
3	T146 2231	4			CHAMBER, Precombustion ***
4	T307 5070	2			PLUG
5	T307 5041	2			PLUG
6	T307 5038	2			PLUG
7					PLUG
	T307 5032	AR			10mm
	T307 5138	AR			12mm
8	T307 5044	2			PLUG
9					NIPPLE, Coolant
	T063 8975	1			18.0mm
	T063 9062	1			20.6mm
10	T052 1772	1			FITTING
11	T066 5489	3			SLEEVE
12					GASKET
	T102 8289	1			1.6mm
	T071 1666	1			1.7mm
	T102 8290	1			1.8mm
13	T067 5862	3			STUD
14	T302 7077	8			STUD
15	T067 5867	AR			WASHER
16	T067 5864	2			BOLT
17	T067 5868	AR			WASHER
18	T067 5866	3			NUT
19	T067 5863	8			BOLT
20	T302 7211	AR			STUD
21	T146 2486	8			GUIDE, 13.35mm
22	T302 7025	AR			STUD
23	T302 7129	AR			STUD
24	T302 7166	AR			STUD
25	T305 5031	11			WASHER, Lock
26	T300 1607	11			BOLT
27	T305 3074	11			WASHER, Flat
28	T072 1928	1			CAP
29	T071 8985	1			GASKET
30	T071 7274	1			COVER, Cylinder Head
31	J305 3043	2			WASHER
32	J303 2018	2			NUT

MODEL CODES
16=Cherokee 2 Dr.(1981-83)
17=Cherokee 2 Dr.(1981-83)
73=Cherokee 2WD-2 Dr.(1984-86)
74=Cherokee 2WD-4 Dr.(1984-86)
18=Cherokee 4 Dr.(1981-83)
77=Cherokee 4WD-2 Dr.(1984-86)
78=Cherokee 4WD-4 Dr.(1984-86)
85=CJ-5 (1981-83)
86=CJ-6(1981)
87=CJ-7(1981-86)
88=CJ-8, Scrambler(1981-86)
64=Comanche 2WD-6 Ft. Box(1986)
66=Comanche 2WD-7 Ft. Box(1986)
63=Comanche 4WD-6 Ft. Box(1986)
65=Comanche 4WD-7 Ft. Box(1986)
15=Grand Wagoneer 4 Dr.(1984-86)
25=J-10 Truck 7 Ft. Box(1981-84)
26=J10 Truck 8 Ft. Box(1981-86)
27=J-20 Truck 8 Ft. Box(1981-86)
15=Wagoneer 4 Dr.(1981-83)
75=Wagoneer 4WD-4 Dr.(1984-86)

BODY
CJ=CJ-5, CJ-6, CJ-7, CJ-8, Scrambler(1981-86)
MJ=Comanche Pickup(1986)

STYLES
SJ=Wagoneer(1981-83), Grand Wagoneer(1984-86), Cherokee(1981-83), J-10, J-20(1981-86)
XJ=Wagoneer(1984-86), Cherokee(1984-86)

AR = Use as Required - = Non Illustrated Part P.A.R. = Paint as Required

« RETURN TO GROUP INDEX »

CYLINDER HEAD 1985-86 RENAULT DIESEL XJ CHEROKEE, XJ WAGONEER, COMANCHE
Figure 9A-4100

81J58 4100

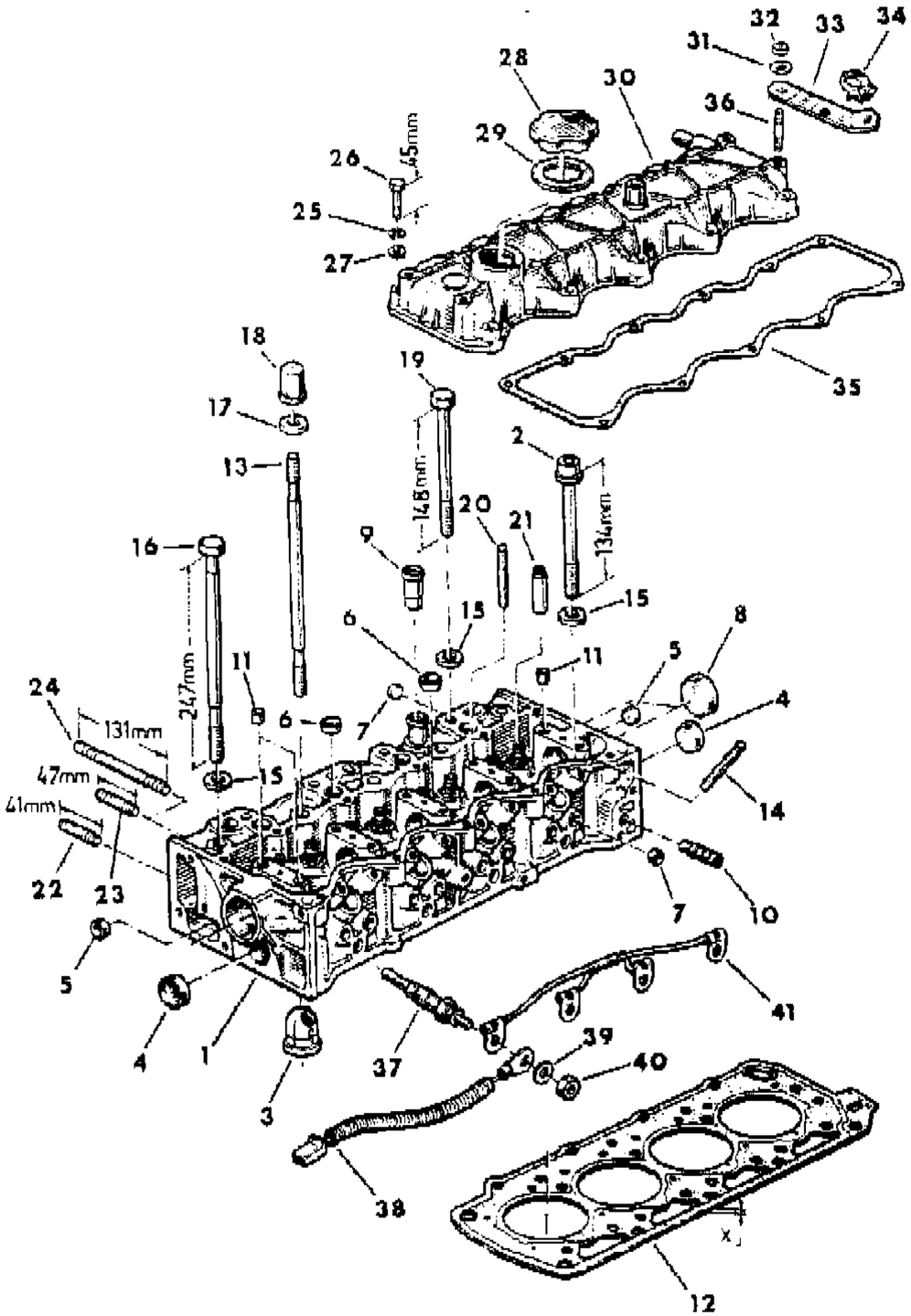

ITEM	PART NUMBER	QTY	BODY	MODEL	DESCRIPTION
33	T069 1636	1			BRACKET
34	T307 9103	2			CLIP
35	T066 5229	1			GASKET
36	T302 7065	2			STUD
37	T070 1130	4			GLOW PLUG ***
38	5603 2504	2			HARNESS, Glow Plug
39	T305 7031	4			WASHER
40	J303 2006	4			NUT
41	T198 6538	1			HARNESS, Glow Plug

MODEL CODES
16=Cherokee 2 Dr.(1981-83)
17=Cherokee 2 Dr.(1981-83)
73=Cherokee 2WD-2 Dr.(1984-86)
74=Cherokee 2WD-4 Dr.(1984-86)
18=Cherokee 4 Dr.(1981-83)
77=Cherokee 4WD-2 Dr.(1984-86)
78=Cherokee 4WD-4 Dr.(1984-86)
85=CJ-5 (1981-83)
86=CJ-6(1981)
87=CJ-7(1981-86)
88=CJ-8, Scrambler(1981-86)
64=Comanche 2WD-6 Ft. Box(1986)
66=Comanche 2WD-7 Ft. Box(1986)
63=Comanche 4WD-6 Ft. Box(1986)
65=Comanche 4WD-7 Ft. Box(1986)
15=Grand Wagoneer 4 Dr.(1984-86)
25=J-10 Truck 7 Ft. Box(1981-84)
26=J10 Truck 8 Ft. Box(1981-86)
27=J-20 Truck 8 Ft. Box(1981-86)
15=Wagoneer 4 Dr.(1981-83)
75=Wagoneer 4WD-4 Dr.(1984-86)

BODY
CJ=CJ-5, CJ-6, CJ-7, CJ-8, Scrambler(1981-86)
MJ=Comanche Pickup(1986)

STYLES
SJ=Wagoneer(1981-83), Grand Wagoneer(1984-86), Cherokee(1981-83), J-10, J-20(1981-86)
XJ=Wagoneer(1984-86), Cherokee(1984-86)

AR = Use as Required - = Non Illustrated Part P.A.R. = Paint as Required

« RETURN TO GROUP INDEX

CRANKSHAFT, FLYWHEEL, AND PISTON 1985-86 RENAULT DIESEL XJ CHEROKEE, XJ WAGONEER, COMANCHE
Figure 9A-4200

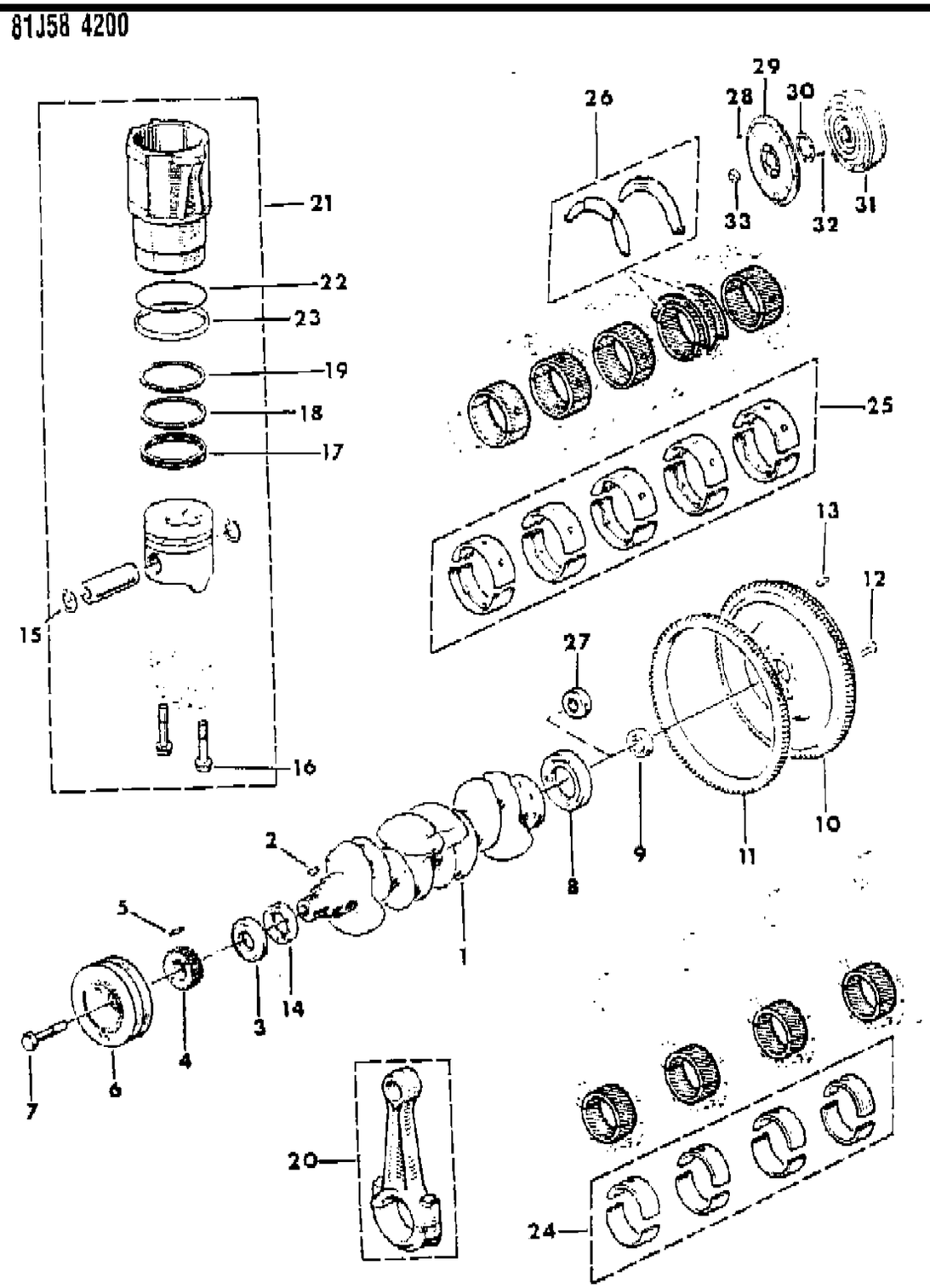

ITEM	PART NUMBER	QTY	BODY	MODEL	DESCRIPTION
1	T070 1165	1			CRANKSHAFT, Less Bearings
2	T307 0009	1			KEY, Shaft
3	T061 6979	1			SPACER
4	T134 9583	1			SPROCKET, Crankshaft
5	T306 7080	1			PIN
6	T072 7596	1			PULLEY, Crankshaft
7	T065 5889	1			BOLT
8	T134 9596	1			SEAL
9	T309 0310	1			BEARING, Pilot, With Manual Transmission
10	T159 6861	1			FLYWHEEL, With Manual Transmission
11	T066 4055	1			GEAR, Ring, With Manual Transmission
12	J061 2359	7			BOLT, With Manual Trnsmission
13	T306 7256	3			PIN, With Manual Transmission
14	T134 9595	1			SEAL
15	T067 6497	8			RETAINER, Piston Pin
16	T067 7771	8			BOLT
17	T134 8931	4			RING, Oil Control
18	T069 6139	4			RING, Lower Compression
19	T069 6138	4			RING, Upper Compression
20	T146 2223	1			ROD SET, Connecting ***
21					PISTON/SLEEVE PACKAGE ***
	T146 2222	1			Up to Engine Serial #3800
	T146 3646	1			After Engine Serial #3800
22	T134 8225	4			O-RING
23	T066 6025	4			GASKET
24					BEARING PACKAGE
	T146 2227	1			56.35mm, -.010"
	T146 2226	1			56.60mm, Standard
25					BEARING PACKAGE
	T134 8543	1			62.63mm, -.010"
	T134 8542	1			62.88mm, Standard
26					BEARING PACKAGE
	T134 8320	1			2.80 thru 2.85mm
	T134 8820	1			2.85 thru 2.90mm
	T134 8821	1			2.90 thru 2.95mm
	T134 8822	1			2.95 thru 3.00mm
27	T072 6963	1			BUSHING, Pilot, With Automatic Transmission
28	J420 0412	4			BOLT
29	T072 6826	1			PLATE, Converter Drive

MODEL CODES

16=Cherokee 2 Dr.(1981-83)	78=Cherokee 4WD-4 Dr.(1984-86)	64=Comanche 2WD-6 Ft. Box(1986)	25=J-10 Truck 7 Ft. Box(1981-84)
17=Cherokee 2 Dr.(1981-83)	85=CJ-5 (1981-83)	66=Comanche 2WD-7 Ft. Box(1986)	26=J10 Truck 8 Ft. Box(1981-86)
73=Cherokee 2WD-2 Dr.(1984-86)	86=CJ-6(1981)	63=Comanche 4WD-6 Ft. Box(1986)	27=J-20 Truck 8 Ft. Box(1981-86)
74=Cherokee 2WD-4 Dr.(1984-86)	87=CJ-7(1981-86)	65=Comanche 4WD-7 Ft. Box(1986)	15=Wagoneer 4 Dr.(1981-83)
18=Cherokee 4 Dr.(1981-83)	88=CJ-8, Scrambler(1981-86)	15=Grand Wagoneer 4 Dr.(1984-86)	75=Wagoneer 4WD-4 Dr.(1984-86)
77=Cherokee 4WD-2 Dr.(1984-86)			

BODY
CJ=CJ-5, CJ-6, CJ-7, CJ-8, Scrambler(1981-86)
MJ=Comanche Pickup(1986)

STYLES
SJ=Wagoneer(1981-83), Grand Wagoneer(1984-86), Cherokee(1981-83), J-10, J-20(1981-86)
XJ=Wagoneer(1984-86), Cherokee(1984-86)

AR = Use as Required - = Non Illustrated Part P.A.R. = Paint as Required

« RETURN TO GROUP INDEX »

CRANKSHAFT, FLYWHEEL, AND PISTON 1985-86 RENAULT DIESEL XJ CHEROKEE, XJ WAGONEER, COMANCHE
Figure 9A-4200

81J58 4200

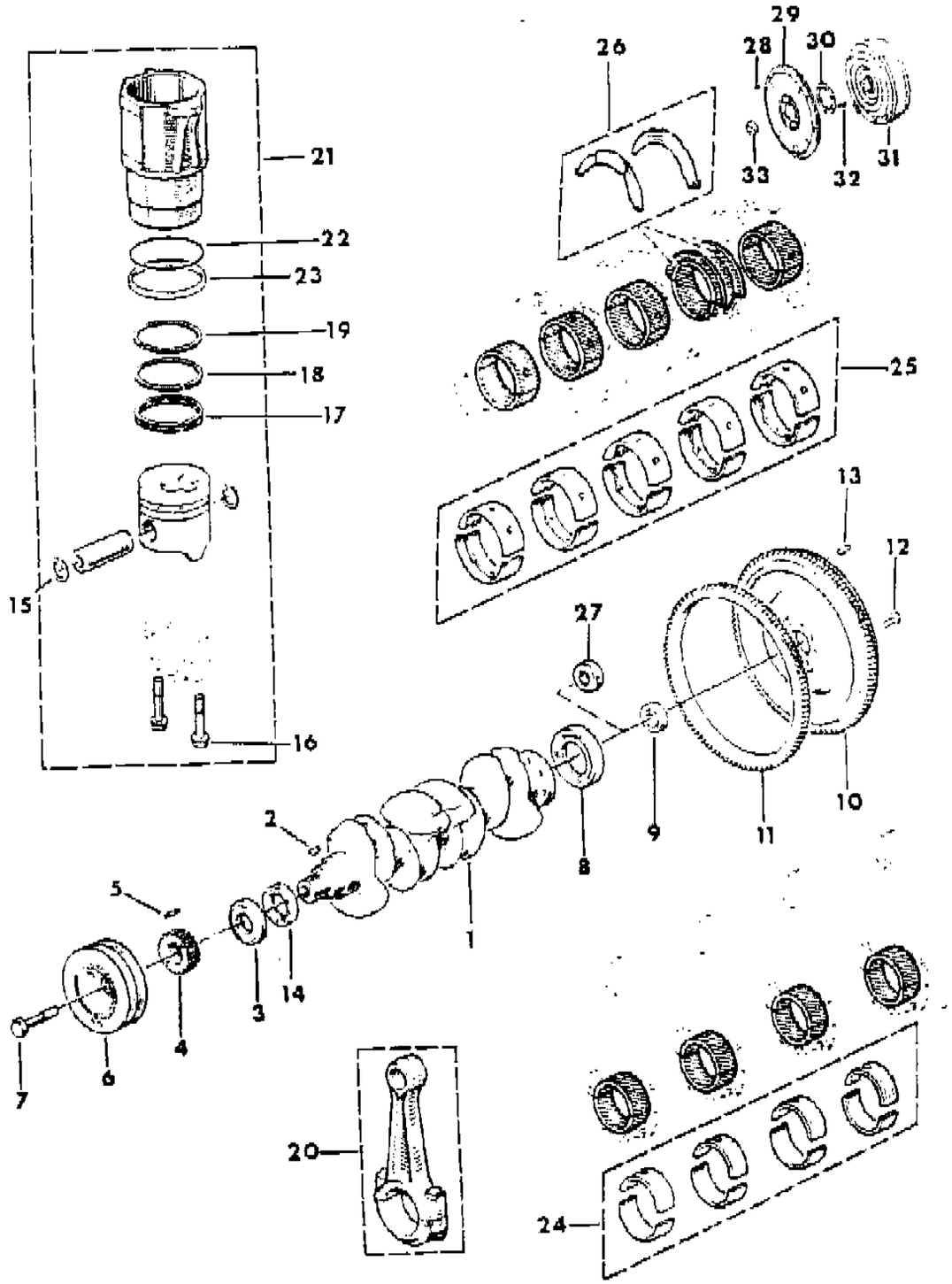

ITEM	PART NUMBER	QTY	BODY	MODEL	DESCRIPTION
30	T062 3834	1			REINFORCEMENT
31					CONVERTER, Transmission
	5300 1333	1			EXPORT
	JR77 5061	1			Remanufactured
32	T065 5880	6			BOLT
33	5300 1406	1			BUSHING

MODEL CODES

16=Cherokee 2 Dr.(1981-83)	78=Cherokee 4WD-4 Dr.(1984-86)	64=Comanche 2WD-6 Ft. Box(1986)	25=J-10 Truck 7 Ft. Box(1981-84)
17=Cherokee 2 Dr.(1981-83)	85=CJ-5 (1981-83)	66=Comanche 2WD-7 Ft. Box(1986)	26=J10 Truck 8 Ft. Box(1981-86)
73=Cherokee 2WD-2 Dr.(1984-86)	86=CJ-6(1981)	63=Comanche 4WD-6 Ft. Box(1986)	27=J-20 Truck 8 Ft. Box(1981-86)
74=Cherokee 2WD-4 Dr.(1984-86)	87=CJ-7(1981-86)	65=Comanche 4WD-7 Ft. Box(1986)	15=Wagoneer 4 Dr.(1981-83)
18=Cherokee 4 Dr.(1981-83)	88=CJ-8, Scrambler(1981-86)	15=Grand Wagoneer 4 Dr.(1984-86)	75=Wagoneer 4WD-4 Dr.(1984-86)
77=Cherokee 4WD-2 Dr.(1984-86)			

BODY
CJ=CJ-5, CJ-6, CJ-7, CJ-8, Scrambler(1981-86)
MJ=Comanche Pickup(1986)

STYLES
SJ=Wagoneer(1981-83), Grand Wagoneer(1984-86), Cherokee(1981-83), J-10, J-20(1981-86)
XJ=Wagoneer(1984-86), Cherokee(1984-86)

AR = Use as Required - = Non Illustrated Part P.A.R. = Paint as Required

« RETURN TO GROUP INDEX

CAMSHAFT AND VALVES, AND PISTON 1985-86 RENAULT DIESEL XJ CHEROKEE, XJ WAGONEER, COMANCHE
Figure 9A-4300

81J58 4300

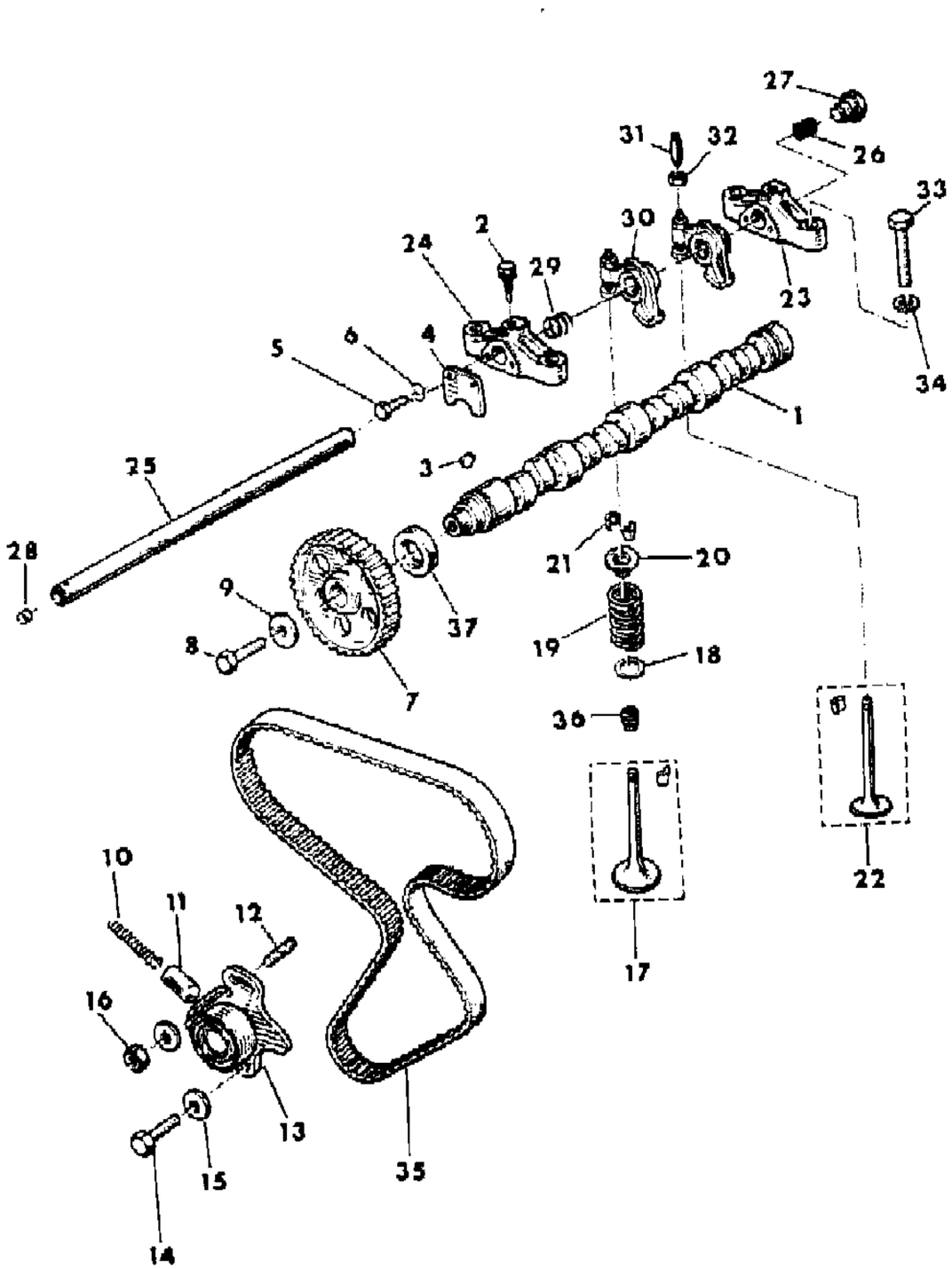

ITEM	PART NUMBER	QTY	BODY	MODEL	DESCRIPTION
1	T069 9231	1			CAMSHAFT
2	T024 5031	5			SCREW
3	T307 0007	1			KEY, Shaft
4	T058 7893	1			RETAINER, Camshaft Thrust
5	J300 1138	2			BOLT
6	T305 6012	2			WASHER
7	T134 9586	1			SPROCKET, Camshaft
8	T310 1091	1			BOLT
9	T305 3345	1			WASHER
10	T501 5125	1			SPRING
11	T134 8251	1			TENSIONER
12	T302 7065	1			STUD
13	T072 2452	1			IDLER, Timing Belt ***
14	T300 1162	1			BOLT
15	T305 3037	2			WASHER
16	J303 2018	1			NUT
17	T146 2232	1			VALVE PACKAGE, Intake ***
18	T305 3099	8			SEAT, Spring
19	T067 3343	8			SPRING
20	T026 8948	8			RETAINER
21	T134 9125	16			KEEPER ***
22	T146 1339	1			VALVE PACKAGE, Exhaust ***
23	T065 4085	4			BRACE
24					BRACE
	T058 8717	1			1985
	T065 4084	1			1986
25	T065 9643	1			SHAFT, Rocker Arm
26	T065 0095	1			FILTER, Rocker Shaft Oil
27	T307 5053	1			PLUG
28	T307 5039	1			PLUG
29	T065 9821	AR			SPRING
30	T600 9641	8			ARM, Valve Rocker
31	T065 9962	8			SCREW
32	T303 2115	8			NUT
33	T300 1693	AR			BOLT
34	T777 7658	AR			WASHER
35	T066 3544	1			BELT, Timing
36	T134 9529	8			SEAL
37	T134 9626	1			SEAL

MODEL CODES
16=Cherokee 2 Dr.(1981-83)
17=Cherokee 2 Dr.(1981-83)
73=Cherokee 2WD-2 Dr.(1984-86)
74=Cherokee 2WD-4 Dr.(1984-86)
18=Cherokee 4 Dr.(1981-83)
77=Cherokee 4WD-2 Dr.(1984-86)
78=Cherokee 4WD-4 Dr.(1984-86)
85=CJ-5 (1981-83)
86=CJ-6(1981)
87=CJ-7(1981-86)
88=CJ-8, Scrambler(1981-86)
64=Comanche 2WD-6 Ft. Box(1986)
66=Comanche 2WD-7 Ft. Box(1986)
63=Comanche 4WD-6 Ft. Box(1986)
65=Comanche 4WD-7 Ft. Box(1986)
15=Grand Wagoneer 4 Dr.(1984-86)
25=J-10 Truck 7 Ft. Box(1981-84)
26=J10 Truck 8 Ft. Box(1981-86)
27=J-20 Truck 8 Ft. Box(1981-86)
15=Wagoneer 4 Dr.(1981-83)
75=Wagoneer 4WD-4 Dr.(1984-86)

BODY
CJ=CJ-5, CJ-6, CJ-7, CJ-8, Scrambler(1981-86)
MJ=Comanche Pickup(1986)

STYLES
SJ=Wagoneer(1981-83), Grand Wagoneer(1984-86), Cherokee(1981-83), J-10, J-20(1981-86)
XJ=Wagoneer(1984-86), Cherokee(1984-86)

AR = Use as Required - = Non Illustrated Part P.A.R. = Paint as Required

« RETURN TO GROUP INDEX

TIMING COVER AND INTERMEDIATE SHAFT 1985-86 RENAULT DIESEL XJ CHEROKEE, XJ WAGONEER, COMANCHE
Figure 9A-4400

81J58 4400

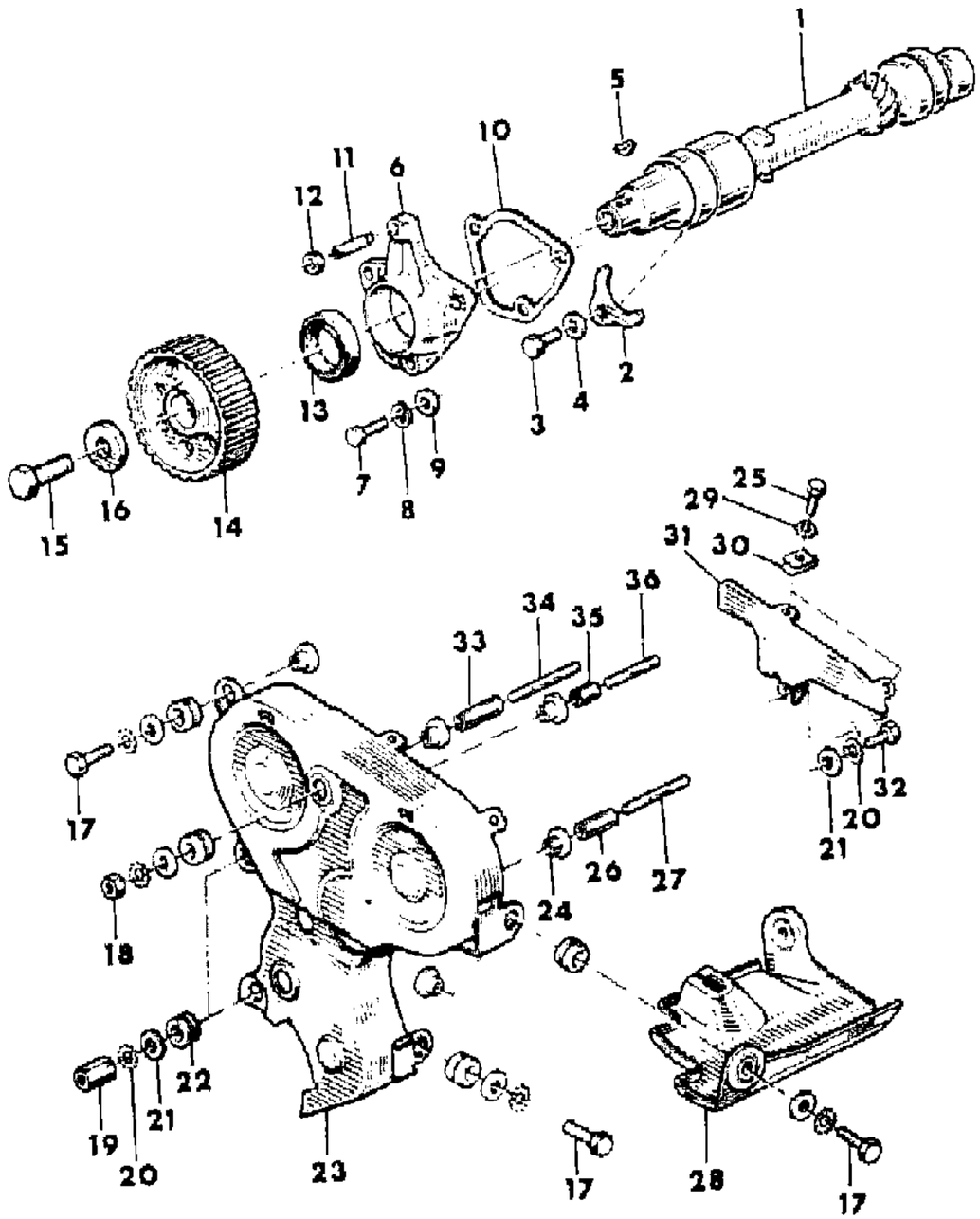

ITEM	PART NUMBER	QTY	BODY	MODEL	DESCRIPTION
1	T059 0867	1			SHAFT, Engine Intermediate
2	T072 4890	1			RETAINER, Shaft Thrust
3	T300 1160	1			BOLT
4	T305 3037	1			WASHER
5	T307 0007	1			KEY, Shaft
6	T065 5189	1			COVER, Intermediate Shaft
7	T300 1142	3			BOLT
8	T305 5031	3			WASHER, Lock
9	T305 3074	3			WASHER, Flat
10	T066 3163	1			GASKET
11	T302 7117	1			NUT
12	T303 2010	1			NUT
13	T134 9625	1			SEAL
14	T134 9584	1			SPROCKET, Intermediate Shaft
15	T310 1069	1			BOLT
16	T305 3189	1			WASHER
17	T300 1142	3			BOLT
18	J303 2012	1			NUT
19	T303 2079	2			NUT, Sleeve
20	T305 6012	7			WASHER, Lock
21	T305 3038	7			WASHER, Flat
22	T063 4996	6			GROMMET
23	T066 4709	1			COVER, Timing Case Front
24	T061 6373	6			BUSHING
25	T300 1118	2			BOLT
26	T500 1001	1			SLEEVE
27	T302 7095	1			STUD
28	T069 3037	1			SHIELD, Alternator
29	J305 6008	2			WASHER
30	T304 6034	2			NUT, Clip
31	T066 4756	1			COVER, Timing Case Rear
32	T300 1236	1			BOLT
33	T500 1002	1			SLEEVE
34	T302 7151	1			STUD
35	T500 1000	1			SLEEVE
36	T302 7113	1			STUD

MODEL CODES
16=Cherokee 2 Dr.(1981-83)
17=Cherokee 2 Dr.(1981-83)
73=Cherokee 2WD-2 Dr.(1984-86)
74=Cherokee 2WD-4 Dr.(1984-86)
18=Cherokee 4 Dr.(1981-83)
77=Cherokee 4WD-2 Dr.(1984-86)
78=Cherokee 4WD-4 Dr.(1984-86)
85=CJ-5 (1981-83)
86=CJ-6(1981)
87=CJ-7(1981-86)
88=CJ-8, Scrambler(1981-86)
64=Comanche 2WD-6 Ft. Box(1986)
66=Comanche 2WD-7 Ft. Box(1986)
63=Comanche 4WD-6 Ft. Box(1986)
65=Comanche 4WD-7 Ft. Box(1986)
15=Grand Wagoneer 4 Dr.(1984-86)
25=J-10 Truck 7 Ft. Box(1981-84)
26=J10 Truck 8 Ft. Box(1981-86)
27=J-20 Truck 8 Ft. Box(1981-86)
15=Wagoneer 4 Dr.(1981-83)
75=Wagoneer 4WD-4 Dr.(1984-86)

BODY
CJ=CJ-5, CJ-6, CJ-7, CJ-8, Scrambler(1981-86)
MJ=Comanche Pickup(1986)

STYLES
SJ=Wagoneer(1981-83), Grand Wagoneer(1984-86), Cherokee(1981-83), J-10, J-20(1981-86)
XJ=Wagoneer(1984-86), Cherokee(1984-86)

AR = Use as Required - = Non Illustrated Part P.A.R. = Paint as Required

« RETURN TO GROUP INDEX

ENGINE OILING 1985-86 RENAULT DIESEL XJ CHEROKEE, XJ WAGONEER, COMANCHE
Figure 9A-4500

81J58 4500

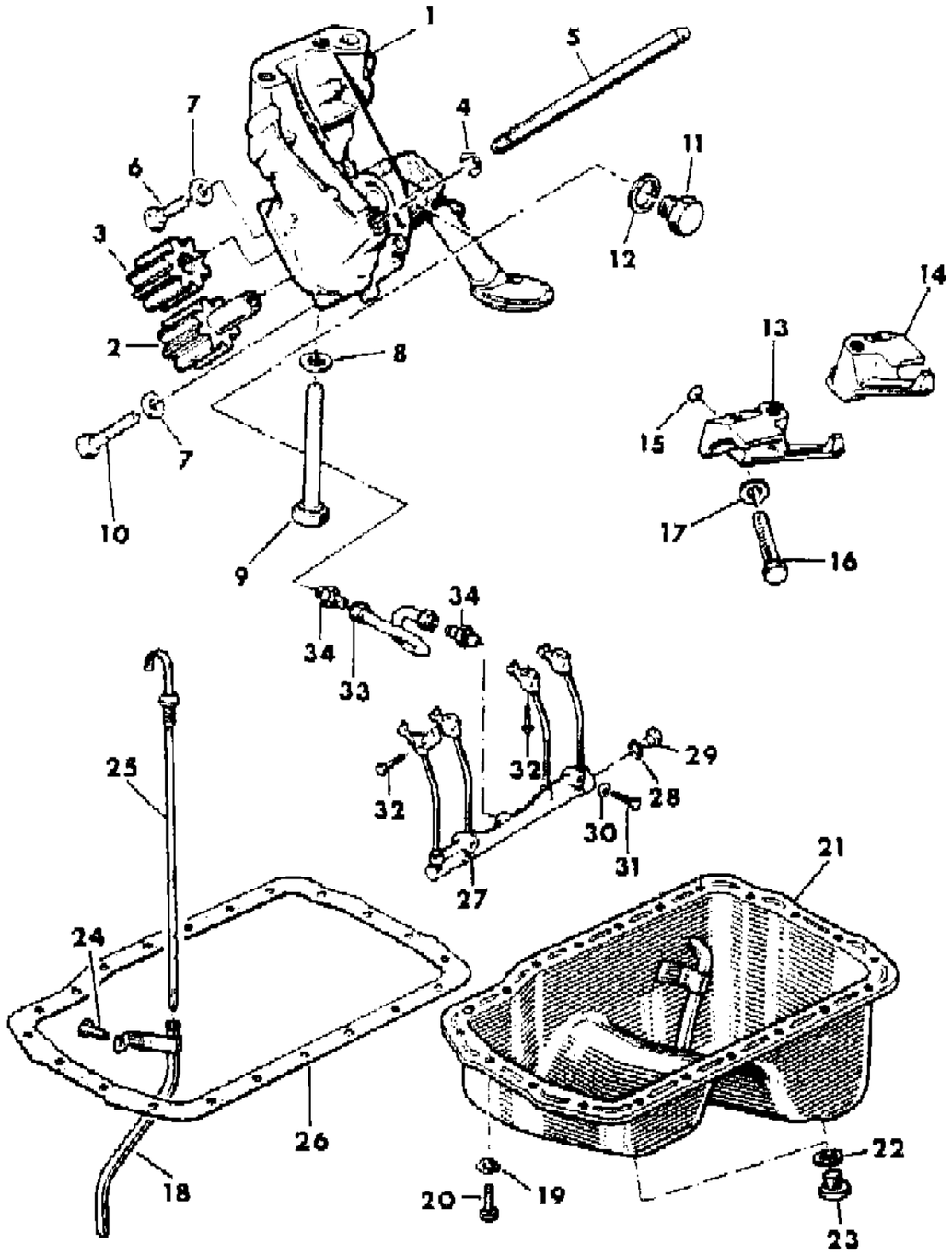

ITEM	PART NUMBER	QTY	BODY	MODEL	DESCRIPTION
1	T600 4404	1			PUMP, Engine Oil
2	T072 4210	1			GEAR, Oil Pump Drive
3	T069 0232	1			GEAR, Oil Pump Driven
4	T303 3231	1			CLIP, Oil Pump Shaft
5	T072 4211	1			SHAFT, Oil Pump Gear
6	T300 1142	AR			BOLT
7	T305 3074	AR			WASHER
8	T777 7663	2			WASHER
9	T310 1057	2			BOLT
10	T300 1123	AR			BOLT
11	T307 5025	1			PLUG, After Engine Serial #3800
12	T306 1028	1			GASKET, After Engine Serial #3800
13	T072 9363	2			JET, Piston Oil Cooling, After Engine Serial #3800
14	T072 9362	2			JET, Piston Oil Cooling, After Engine Serial #3800
15	T306 5104	4			SEAL, After Engine Serial #3800
16	T300 1614	4			BOLT, After Engine Serial #3800
17	T305 3174	4			WASHER, After Engine Serial #3800
18	T072 5913	1			TUBE, Engine Oil Indicator
19	T305 6029	21			WASHER
20	T300 1236	21			BOLT
21	T146 3599	1			PAN, Engine Oil
22	T777 7649	2			GASKET
23	T307 5152	2			PLUG
24	T300 1158	1			BOLT
25	T071 3429	1			INDICATOR, Engine Oil Level
26	T069 5923	1			GASKET
27	T069 3267	1			JET MANIFOLD, Oil Cooling, Up to Engine Serial #3800 ***
28	J306 2014	1			GASKET, Up to Engine Serial #3800
29	J307 5076	1			PLUG, Up to Engine Serial #3800
30	J305 3407	2			WASHER, Up to Engine Serial #3800
31	T300 1693	2			BOLT, Up to Engine Serial #3800
32	T300 1863	4			BOLT, Up to Engine Serial #3800
33	T072 6946	1			TUBE, Manifold Oil Supply, Up to Engine Serial #3 800
34	T072 6945	2			CONNECTOR, Up to Engine Serial #3800

MODEL CODES

16=Cherokee 2 Dr.(1981-83)
17=Cherokee 2 Dr.(1981-83)
73=Cherokee 2WD-2 Dr.(1984-86)
74=Cherokee 2WD-4 Dr.(1984-86)
18=Cherokee 4 Dr.(1981-83)
77=Cherokee 4WD-2 Dr.(1984-86)
78=Cherokee 4WD-4 Dr.(1984-86)
85=CJ-5 (1981-83)
86=CJ-6(1981)
87=CJ-7(1981-86)
88=CJ-8, Scrambler(1981-86)
64=Comanche 2WD-6 Ft. Box(1986)
66=Comanche 2WD-7 Ft. Box(1986)
63=Comanche 4WD-6 Ft. Box(1986)
65=Comanche 4WD-7 Ft. Box(1986)
15=Grand Wagoneer 4 Dr.(1984-86)
25=J-10 Truck 7 Ft. Box(1981-84)
26=J10 Truck 8 Ft. Box(1981-86)
27=J-20 Truck 8 Ft. Box(1981-86)
15=Wagoneer 4 Dr.(1981-83)
75=Wagoneer 4WD-4 Dr.(1984-86)

BODY
CJ=CJ-5, CJ-6, CJ-7, CJ-8, Scrambler(1981-86)
MJ=Comanche Pickup(1986)

STYLES
SJ=Wagoneer(1981-83), Grand Wagoneer(1984-86), Cherokee(1981-83), J-10, J-20(1981-86)
XJ=Wagoneer(1984-86), Cherokee(1984-86)

AR = Use as Required - = Non Illustrated Part P.A.R. = Paint as Required

« RETURN TO GROUP INDEX

MANIFOLD, INTAKE AND EXHAUST 1985-86 RENAULT DIESEL XJ CHEROKEE, XJ WAGONEER, COMANCHE
Figure 9A-4600

81J58 4600

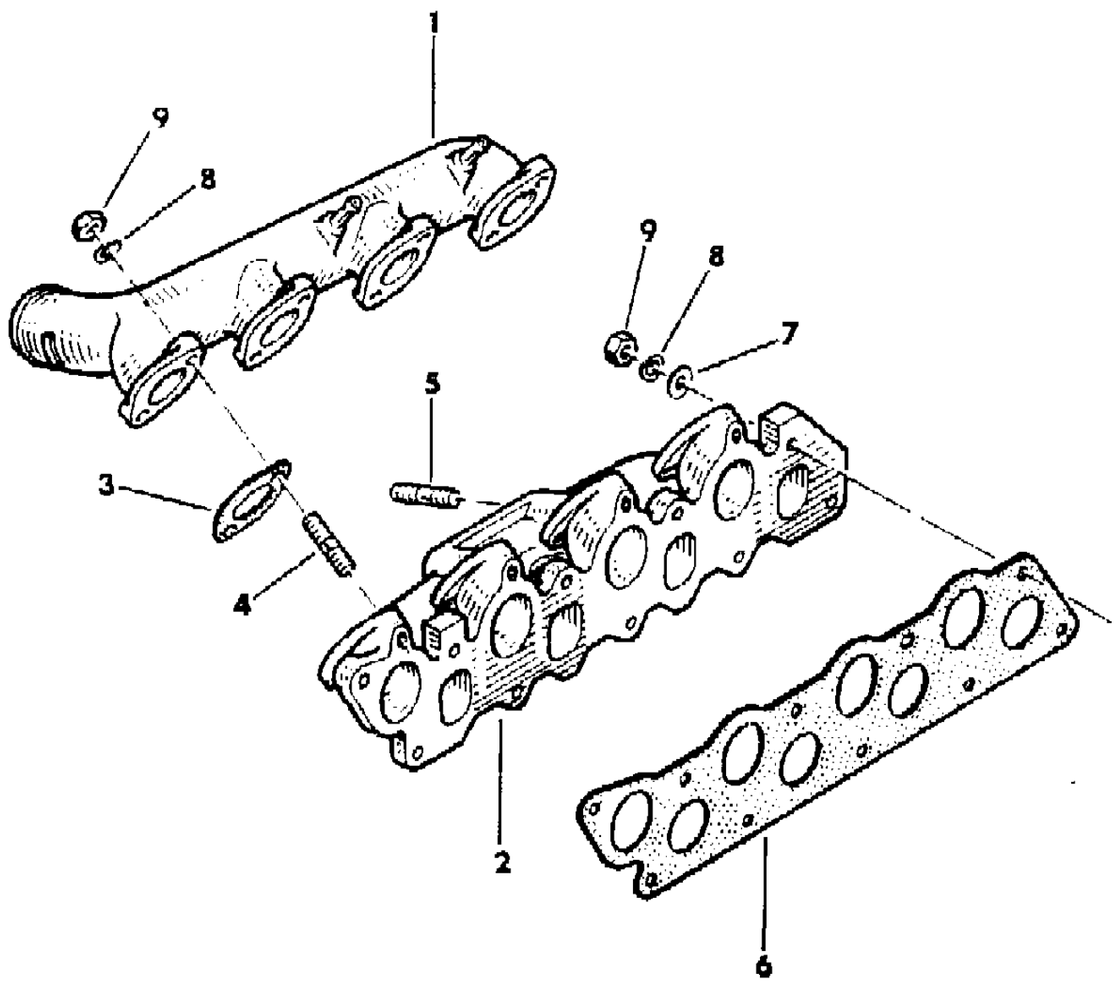

ITEM	PART NUMBER	QTY	BODY	MODEL	DESCRIPTION
1	T068 8218	1			MANIFOLD, Pre-intake
2	T072 3183	1			MANIFOLD, Intake/Exhaust
3	T069 4729	4			GASKET
4	T302 7155	8			STUD
5	T302 7156	4			STUD
6	T134 8923	1			GASKET
7	T305 3037	10			WASHER, Flat
8	T305 5011	18			WASHER, Lock
9	J303 2018	18			NUT

MODEL CODES

16=Cherokee 2 Dr.(1981-83)
17=Cherokee 2 Dr.(1981-83)
73=Cherokee 2WD-2 Dr.(1984-86)
74=Cherokee 2WD-4 Dr.(1984-86)
18=Cherokee 4 Dr.(1981-83)
77=Cherokee 4WD-2 Dr.(1984-86)
78=Cherokee 4WD-4 Dr.(1984-86)
85=CJ-5 (1981-83)
86=CJ-6(1981)
87=CJ-7(1981-86)
88=CJ-8, Scrambler(1981-86)
64=Comanche 2WD-6 Ft. Box(1986)
66=Comanche 2WD-7 Ft. Box(1986)
63=Comanche 4WD-6 Ft. Box(1986)
65=Comanche 4WD-7 Ft. Box(1986)
15=Grand Wagoneer 4 Dr.(1984-86)
25=J-10 Truck 7 Ft. Box(1981-84)
26=J10 Truck 8 Ft. Box(1981-86)
27=J-20 Truck 8 Ft. Box(1981-86)
15=Wagoneer 4 Dr.(1981-83)
75=Wagoneer 4WD-4 Dr.(1984-86)

BODY
CJ=CJ-5, CJ-6, CJ-7, CJ-8, Scrambler(1981-86)
MJ=Comanche Pickup(1986)

STYLES
SJ=Wagoneer(1981-83), Grand Wagoneer(1984-86), Cherokee(1981-83), J-10, J-20(1981-86)
XJ=Wagoneer(1984-86), Cherokee(1984-86)

AR = Use as Required - = Non Illustrated Part P.A.R. = Paint as Required

« RETURN TO GROUP INDEX

SEPARATOR, OIL 1985-86 RENAULT DIESEL XJ CHEROKEE, XJ WAGONEER, COMANCHE
Figure 9A-4700

81J58 4700

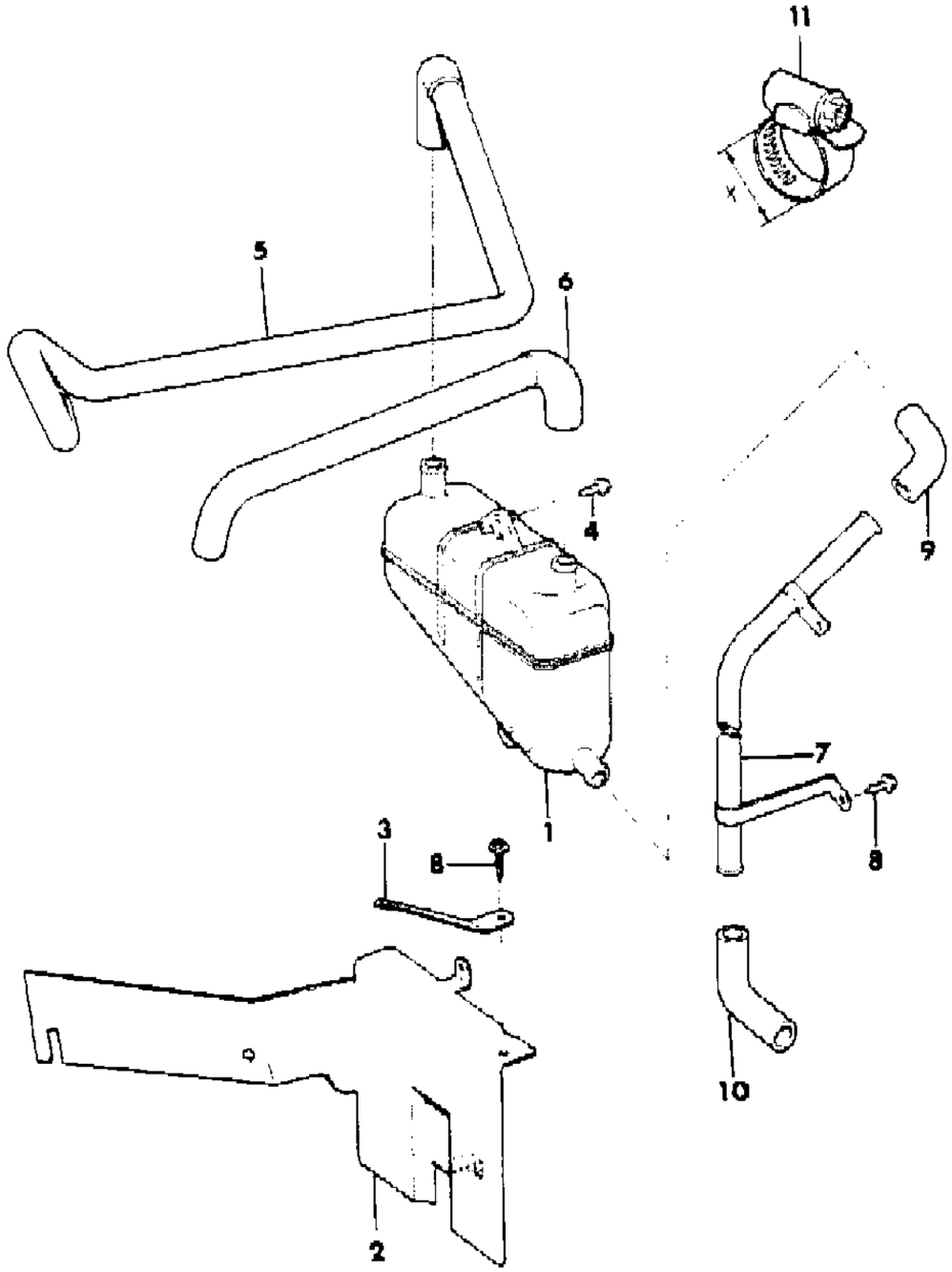

ITEM	PART NUMBER	QTY	BODY	MODEL	DESCRIPTION
1	J069 9090	1			TANK, Oil Separator ***
2	3300 2101	1			BRACKET, With Shield
3	3300 2102	1			STRAP, Support
4	1150 0179	2			SCREW
5	5300 2320	1			HOSE, Separator to Turbo Inlet
6	5300 2321	1			Hose, Separator To Valve Cover ***
7					TUBE ASSEMBLY, Separator Drain ***
	5300 2212	1			With Manual Transmission
	5300 2211	1			With Automatic Transmission
8	1150 2453	2			SCREW
9	5300 2213	1			HOSE, Drain Tube Upper
10	5300 2214	1			HOSE, Drain Tube Lower
11					CLAMP, Hose
	J320 3076	AR			X=.56" thru 1.06"
	J320 3077	AR			X=.81" thur 1.75"

MODEL CODES

16=Cherokee 2 Dr.(1981-83)	78=Cherokee 4WD-4 Dr.(1984-86)	64=Comanche 2WD-6 Ft. Box(1986)	25=J-10 Truck 7 Ft. Box(1981-84)
17=Cherokee 2 Dr.(1981-83)	85=CJ-5 (1981-83)	66=Comanche 2WD-7 Ft. Box(1986)	26=J10 Truck 8 Ft. Box(1981-86)
73=Cherokee 2WD-2 Dr.(1984-86)	86=CJ-6(1981)	63=Comanche 4WD-6 Ft. Box(1986)	27=J-20 Truck 8 Ft. Box(1981-86)
74=Cherokee 2WD-4 Dr.(1984-86)	87=CJ-7(1981-86)	65=Comanche 4WD-7 Ft. Box(1986)	15=Wagoneer 4 Dr.(1981-83)
18=Cherokee 4 Dr.(1981-83)	88=CJ-8, Scrambler(1981-86)	15=Grand Wagoneer 4 Dr.(1984-86)	75=Wagoneer 4WD-4 Dr.(1984-86)
77=Cherokee 4WD-2 Dr.(1984-86)			

BODY
CJ=CJ-5, CJ-6, CJ-7, CJ-8, Scrambler(1981-86)
MJ=Comanche Pickup(1986)

STYLES
SJ=Wagoneer(1981-83), Grand Wagoneer(1984-86), Cherokee(1981-83), J-10, J-20(1981-86)
XJ=Wagoneer(1984-86), Cherokee(1984-86)

AR = Use as Required - = Non Illustrated Part P.A.R. = Paint as Required

« RETURN TO GROUP INDEX

OIL COOLER AND FILTER 1985-86 RENAULT DIESEL XJ CHEROKEE, XJ WAGONEER, COMANCHE
Figure 9A-4800

81J58 4800

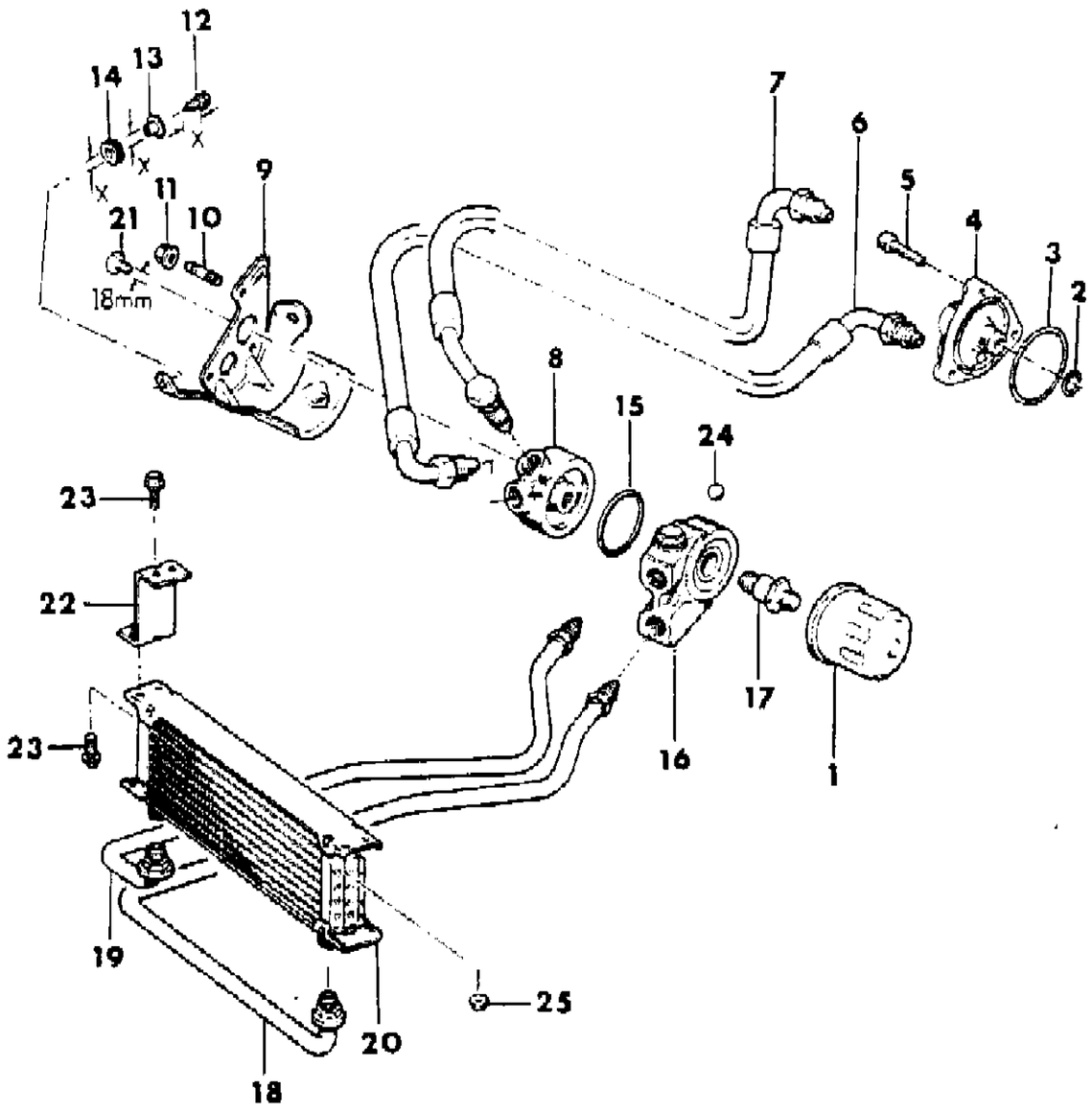

ITEM	PART NUMBER	QTY	BODY	MODEL	DESCRIPTION
1	T073 0077	1			FILTER, Engine Oil
2	T306 5091	1			SEAL
3	T306 5090	1			GASKET
4	T070 2948	1			ADAPTER, Engine Oil Filter
5	T300 9085	3			BOLT
6	5300 1923	1			HOSE, Remote Filter Suppply
7	3300 1312	1			HOSE, Remote Filter Return
8	J072 2458	1			ADAPTER, Engine Oil Filter
9	3300 1313	1			BRACKET, Remote Oil Filter
10	T302 7081	3			STUD
11	J420 0046	3			NUT
12					SCREW
	1150 2453	1			X=16mm
	3420 1691	2			X=20mm
13					BUSHING
	3300 2747	1			X=12.0mm
	3300 2748	2			X=10.6mm
14					GROMMET
	3300 2744	1			X=11.7mm
	3300 2745	2			X=10.3mm
15	3420 2316	1			O-RING
16	5200 1633	1			VALVE, Oil Cooler Bypass
17	5200 1658	1			CONNECTOR
18	5200 1631	1			TUBE, Engine Oil Cooler, Left
19	5200 1632	1			TUBE, Engine Oil Cooler, Right
20	5200 1848	1			COOLER, Engine Oil
21	5300 3926	1			PLUG
22					BRACKET, Oil Cooler
	5200 1854	1			Left
	5300 1695	1			Right
23	1150 5117	6			BOLT
24	8350 4927	1			BALL
25	1150 3745	2			NUT

MODEL CODES

16=Cherokee 2 Dr.(1981-83)
17=Cherokee 2 Dr.(1981-83)
73=Cherokee 2WD-2 Dr.(1984-86)
74=Cherokee 2WD-4 Dr.(1984-86)
18=Cherokee 4 Dr.(1981-83)
77=Cherokee 4WD-2 Dr.(1984-86)
78=Cherokee 4WD-4 Dr.(1984-86)
85=CJ-5 (1981-83)
86=CJ-6(1981)
87=CJ-7(1981-86)
88=CJ-8, Scrambler(1981-86)
64=Comanche 2WD-6 Ft. Box(1986)
66=Comanche 2WD-7 Ft. Box(1986)
63=Comanche 4WD-6 Ft. Box(1986)
65=Comanche 4WD-7 Ft. Box(1986)
15=Grand Wagoneer 4 Dr.(1984-86)
25=J-10 Truck 7 Ft. Box(1981-84)
26=J10 Truck 8 Ft. Box(1981-86)
27=J-20 Truck 8 Ft. Box(1981-86)
15=Wagoneer 4 Dr.(1981-83)
75=Wagoneer 4WD-4 Dr.(1984-86)

BODY
CJ=CJ-5, CJ-6, CJ-7, CJ-8, Scrambler(1981-86)
MJ=Comanche Pickup(1986)

STYLES
SJ=Wagoneer(1981-83), Grand Wagoneer(1984-86), Cherokee(1981-83), J-10, J-20(1981-86)
XJ=Wagoneer(1984-86), Cherokee(1984-86)

AR = Use as Required - = Non Illustrated Part P.A.R. = Paint as Required

« RETURN TO GROUP INDEX

ENGINE MOUNTING 1985-86 RENAULT DIESEL XJ CHEROKEE, XJ WAGONEER, COMANCHE
Figure 9A-4900

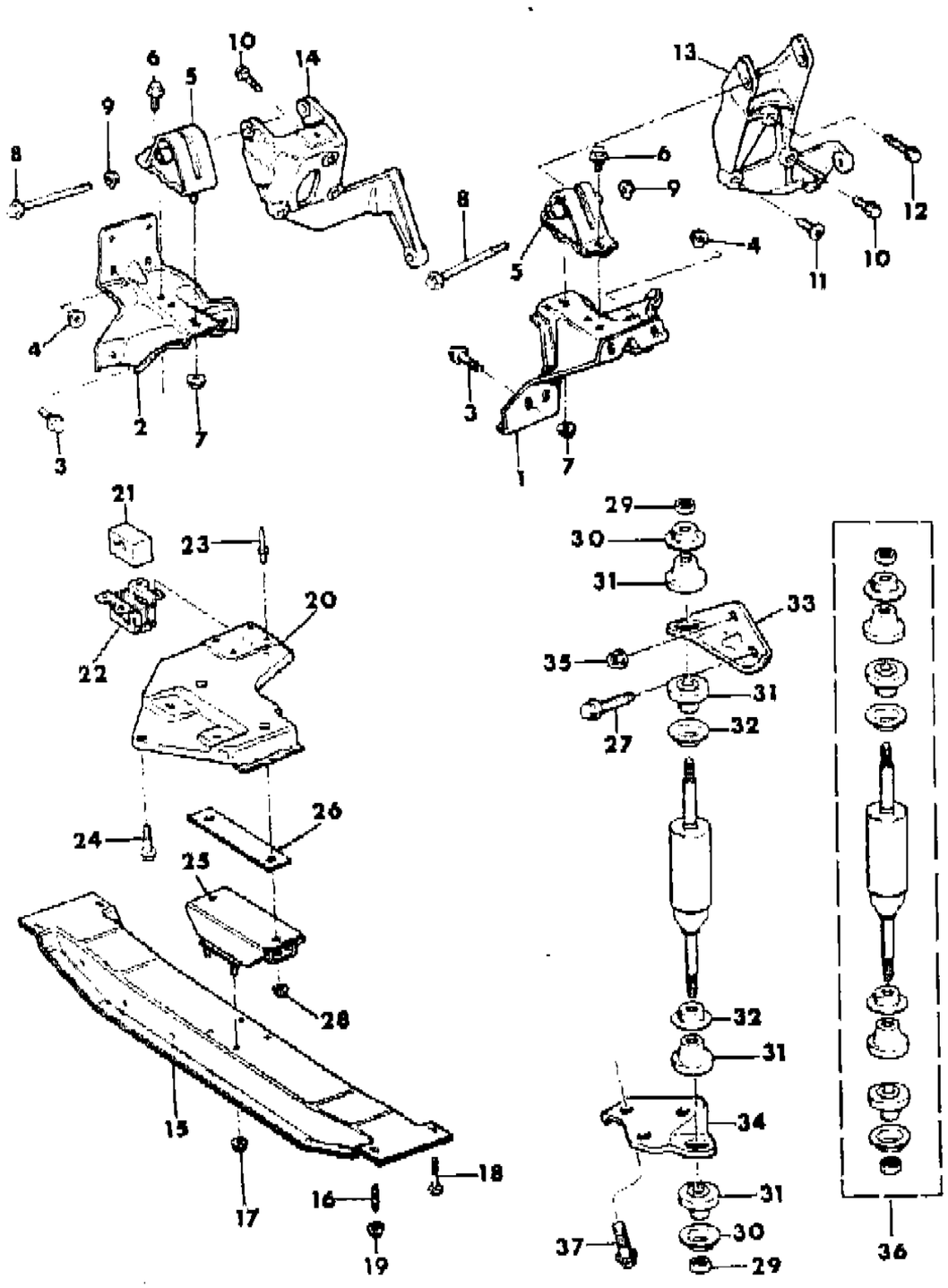

ITEM	PART NUMBER	QTY	BODY	MODEL	DESCRIPTION
1	5200 1497	1			BRACKET, Engine Left
2	5200 1498	1			BRACKET, Engine Right
3	1150 2650	4			BOLT
4	3420 1416	4			NUT
5	5200 0957	2			MOUNT, Engine ***
6					BOLT
	1150 2685	2			1985
	3420 2037	2			1986
7	1150 2812	2			NUT
8	3420 1959	2			BOLT
9	1150 2813	2			NUT
10	1150 4516	4			BOLT
11	3420 2174	1			BOLT
12	1150 4038	1			BOLT
13	5200 0771	1			BRACKET, Engine, Left
14	5200 0770	1			BRACKET, Engine, Right
15					CROSSMEMBER, Transmission Support
	5200 0345	1			1985
	5200 1303	1			1986
16	3420 1710	2			STUD
17	1150 2812	4			NUT
18	3420 1540	2			BOLT
19	1150 2812	4			NUT
20					BRACKET, Transmission Support
					Manual
	5200 0675	1			Four Speed Tagged 53001547, 53001548
	5200 0675	1			Five Speed Tagged 53001551, 53001552
	5200 1147	1			Four Speed Tagged 53001565
	5200 1147	1			Five Speed Tagged 53001566
	5200 1505	1			Five Speed Tagged 53001190
					Automatic
	5200 1017	1			Four Wheel Drive
	5200 1754	1			Two Wheel Drive
21	5300 0101	1			INSULATOR
22	5300 0104	1			BRACKET
23					RIVET
	3420 1629	4			With Manual Transmission
	3420 1980	1			With Automatic Transmission
24					BOLT

MODEL CODES

16=Cherokee 2 Dr.(1981-83)
17=Cherokee 2 Dr.(1981-83)
73=Cherokee 2WD-2 Dr.(1984-86)
74=Cherokee 2WD-4 Dr.(1984-86)
18=Cherokee 4 Dr.(1981-83)
77=Cherokee 4WD-2 Dr.(1984-86)
78=Cherokee 4WD-4 Dr.(1984-86)
85=CJ-5 (1981-83)
86=CJ-6(1981)
87=CJ-7(1981-86)
88=CJ-8, Scrambler(1981-86)
64=Comanche 2WD-6 Ft. Box(1986)
66=Comanche 2WD-7 Ft. Box(1986)
63=Comanche 4WD-6 Ft. Box(1986)
65=Comanche 4WD-7 Ft. Box(1986)
15=Grand Wagoneer 4 Dr.(1984-86)
25=J-10 Truck 7 Ft. Box(1981-84)
26=J10 Truck 8 Ft. Box(1981-86)
27=J-20 Truck 8 Ft. Box(1981-86)
15=Wagoneer 4 Dr.(1981-83)
75=Wagoneer 4WD-4 Dr.(1984-86)

BODY
CJ=CJ-5, CJ-6, CJ-7, CJ-8, Scrambler(1981-86)
MJ=Comanche Pickup(1986)

STYLES
SJ=Wagoneer(1981-83), Grand Wagoneer(1984-86), Cherokee(1981-83), J-10, J-20(1981-86)
XJ=Wagoneer(1984-86), Cherokee(1984-86)

AR = Use as Required - = Non Illustrated Part P.A.R. = Paint as Required

« RETURN TO GROUP INDEX »

ENGINE MOUNTING 1985-86 RENAULT DIESEL XJ CHEROKEE, XJ WAGONEER, COMANCHE
Figure 9A-4900

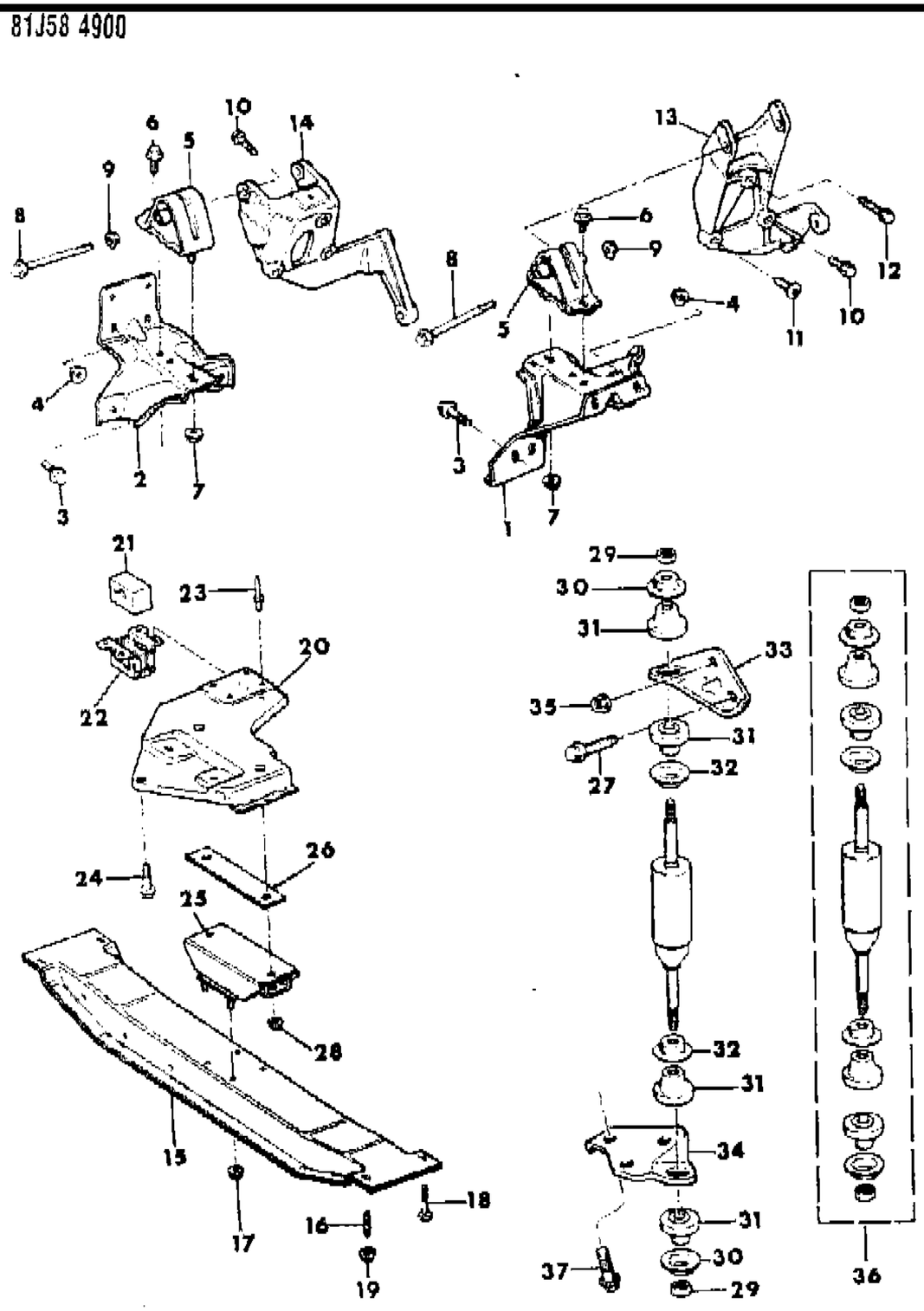

ITEM	PART NUMBER	QTY	BODY	MODEL	DESCRIPTION
	J400 7155	AR			With Manual Transmission
	J400 7162	AR			With Automatic Transmission
25					CUSHION, Transmission Support Rear
	5200 1180	1			Manual, Four Wheel Drive,
	5200 1313	1			Manual, Four Wheel Drive, Blue
	5200 2334	1			Automatic, Purple
26	5200 0956	1			SPACER
27	3420 2047	1			BOLT
28					NUT
	1150 2812	2			With Manual Transmission
	1150 2813	2			With Automatic Transmission
29	J012 0368	2			NUT
30	5200 0819	2			RETAINER, Outer
31	5200 0619	4			BUSHING
32	5200 0820	2			RETAINER, Inner
33	5200 1070	1			BRACKET, Shock Absorber
34	5200 1071	1			BRACKET, Shock Absorber
35	J420 0081	1			NUT
36	8350 0358	1			SHOCK ABSORBER PACKAGE, Engine ***
37					BOLT
	3420 1321	3			25mm
	3420 2114	3			35mm
	3420 2060	3			45mm

MODEL CODES

16=Cherokee 2 Dr.(1981-83)	78=Cherokee 4WD-4 Dr.(1984-86)	64=Comanche 2WD-6 Ft. Box(1986)	25=J-10 Truck 7 Ft. Box(1981-84)
17=Cherokee 2 Dr.(1981-83)	85=CJ-5 (1981-83)	66=Comanche 2WD-7 Ft. Box(1986)	26=J10 Truck 8 Ft. Box(1981-86)
73=Cherokee 2WD-2 Dr.(1984-86)	86=CJ-6(1981)	63=Comanche 4WD-6 Ft. Box(1986)	27=J-20 Truck 8 Ft. Box(1981-86)
74=Cherokee 2WD-4 Dr.(1984-86)	87=CJ-7(1981-86)	65=Comanche 4WD-7 Ft. Box(1986)	15=Wagoneer 4 Dr.(1981-83)
18=Cherokee 4 Dr.(1981-83)	88=CJ-8, Scrambler(1981-86)	15=Grand Wagoneer 4 Dr.(1984-86)	75=Wagoneer 4WD-4 Dr.(1984-86)
77=Cherokee 4WD-2 Dr.(1984-86)			

BODY
CJ=CJ-5, CJ-6, CJ-7, CJ-8, Scrambler(1981-86)
MJ=Comanche Pickup(1986)

STYLES
SJ=Wagoneer(1981-83), Grand Wagoneer(1984-86), Cherokee(1981-83), J-10, J-20(1981-86)
XJ=Wagoneer(1984-86), Cherokee(1984-86)

AR = Use as Required - = Non Illustrated Part P.A.R. = Paint as Required

« RETURN TO GROUP INDEX

BLOCK, ENGINE 1984-86 FOUR CYLINDER GAS XJ CHEROKEE, XJ WAGONEER, COMANCHE
Figure 9A-5000

81J58 5000

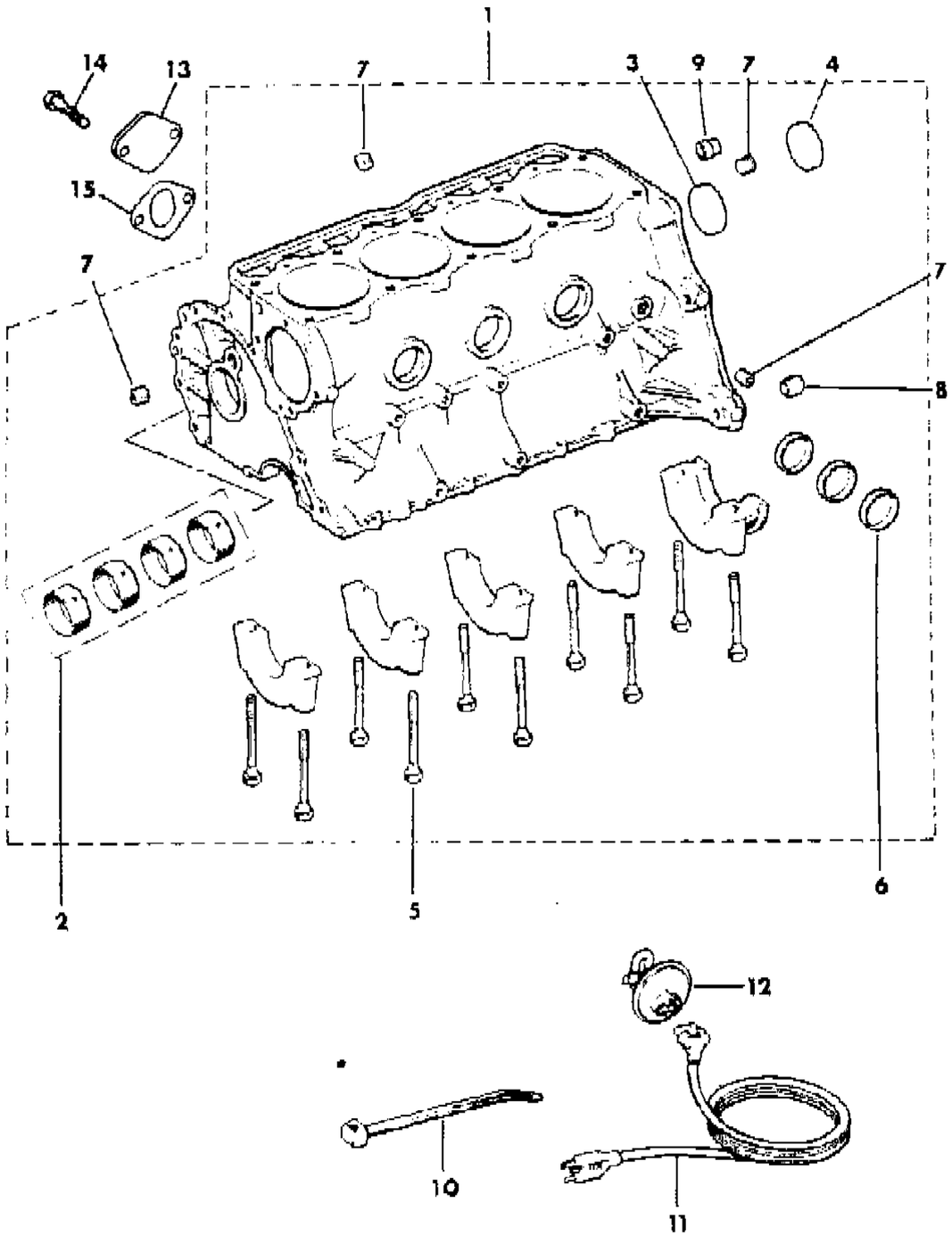

ITEM	PART NUMBER	QTY	BODY	MODEL	DESCRIPTION
1					BLOCK, Engine
	8350 0246	1			1984-85
	8350 2498	1			1986
2					BEARING PACKAGE
	J320 5711	1			Standard
	J320 8985	1			+.010"
3	J317 2313	1			PLUG
4	J310 5394	1			PLUG
5	J400 6948	10			BOLT
6	J400 6580	3			PLUG
7	J044 4660	4			PLUG
8	J400 6953	1			PIN
9	J324 1332	1			PIN
10					STRAP
	J323 3227	AR			200mm
	J369 3058	AR			300mm
	J323 0270	AR			350mm
	J323 5187	AR			450mm
11	3600 0628	1			CORD, Power Supply
12	J324 1657	1			HEATER, Engine Block
13	3300 4223	1			PLATE, Cover, Fuel Pump
14	J018 0077	2			BOLT
15	J317 4685	1			GASKET

MODEL CODES

16=Cherokee 2 Dr.(1981-83)
17=Cherokee 2 Dr.(1981-83)
73=Cherokee 2WD-2 Dr.(1984-86)
74=Cherokee 2WD-4 Dr.(1984-86)
18=Cherokee 4 Dr.(1981-83)
77=Cherokee 4WD-2 Dr.(1984-86)
78=Cherokee 4WD-4 Dr.(1984-86)
85=CJ-5 (1981-83)
86=CJ-6(1981)
87=CJ-7(1981-86)
88=CJ-8, Scrambler(1981-86)
64=Comanche 2WD-6 Ft. Box(1986)
66=Comanche 2WD-7 Ft. Box(1986)
63=Comanche 4WD-6 Ft. Box(1986)
65=Comanche 4WD-7 Ft. Box(1986)
15=Grand Wagoneer 4 Dr.(1984-86)
25=J-10 Truck 7 Ft. Box(1981-84)
26=J10 Truck 8 Ft. Box(1981-86)
27=J-20 Truck 8 Ft. Box(1981-86)
15=Wagoneer 4 Dr.(1981-83)
75=Wagoneer 4WD-4 Dr.(1984-86)

BODY

CJ=CJ-5, CJ-6, CJ-7, CJ-8, Scrambler(1981-86)
MJ=Comanche Pickup(1986)

STYLES

SJ=Wagoneer(1981-83), Grand Wagoneer(1984-86), Cherokee(1981-83), J-10, J-20(1981-86)
XJ=Wagoneer(1984-86), Cherokee(1984-86)

AR = Use as Required - = Non Illustrated Part P.A.R. = Paint as Required

« RETURN TO GROUP INDEX

GASKET SET 1984-86 FOUR CYLINDER GAS XJ CHEROKEE, XJ WAGONEER, COMANCHE
Figure 9A-5100

81J58 5100

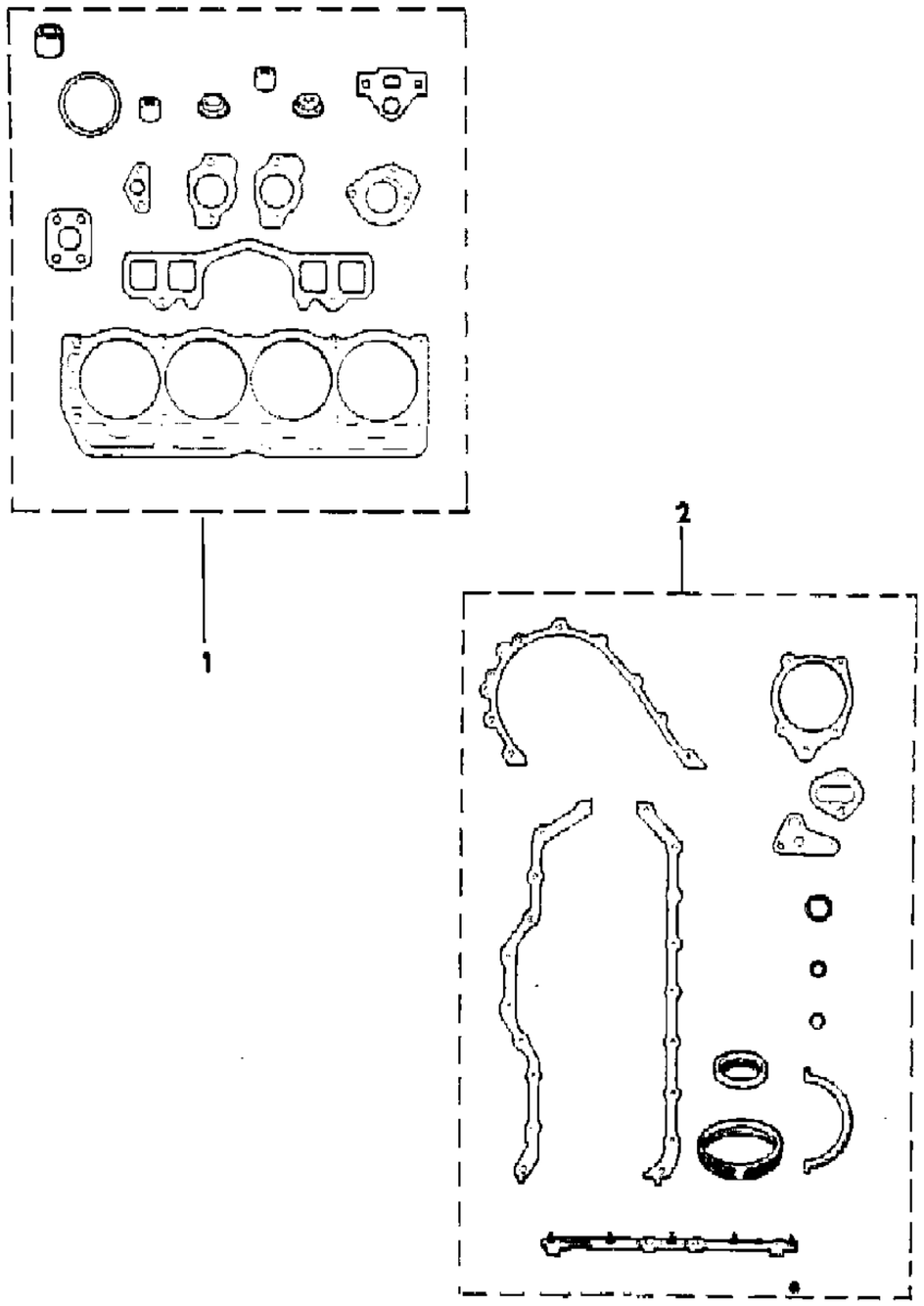

ITEM	PART NUMBER	QTY	BODY	MODEL	DESCRIPTION
1					GASKET PACKAGE, Engine Upper
	8350 0255	1			1984-85
	8350 2501	1			1986
2	8350 0256	1			GASKET PACKAGE, Engine Lower

MODEL CODES

16=Cherokee 2 Dr.(1981-83)	78=Cherokee 4WD-4 Dr.(1984-86)	64=Comanche 2WD-6 Ft. Box(1986)	25=J-10 Truck 7 Ft. Box(1981-84)
17=Cherokee 2 Dr.(1981-83)	85=CJ-5 (1981-83)	66=Comanche 2WD-7 Ft. Box(1986)	26=J10 Truck 8 Ft. Box(1981-86)
73=Cherokee 2WD-2 Dr.(1984-86)	86=CJ-6(1981)	63=Comanche 4WD-6 Ft. Box(1986)	27=J-20 Truck 8 Ft. Box(1981-86)
74=Cherokee 2WD-4 Dr.(1984-86)	87=CJ-7(1981-86)	65=Comanche 4WD-7 Ft. Box(1986)	15=Wagoneer 4 Dr.(1981-83)
18=Cherokee 4 Dr.(1981-83)	88=CJ-8, Scrambler(1981-86)	15=Grand Wagoneer 4 Dr.(1984-86)	75=Wagoneer 4WD-4 Dr.(1984-86)
77=Cherokee 4WD-2 Dr.(1984-86)			

BODY
CJ=CJ-5, CJ-6, CJ-7, CJ-8, Scrambler(1981-86)
MJ=Comanche Pickup(1986)

STYLES
SJ=Wagoneer(1981-83), Grand Wagoneer(1984-86), Cherokee(1981-83), J-10, J-20(1981-86)
XJ=Wagoneer(1984-86), Cherokee(1984-86)

AR = Use as Required - = Non Illustrated Part P.A.R. = Paint as Required

« RETURN TO GROUP INDEX

CYLINDER HEAD 1984-86 FOUR CYLINDER GAS XJ CHEROKEE, XJ WAGONEER, COMANCHE
Figure 9A-5200

81J58 5200

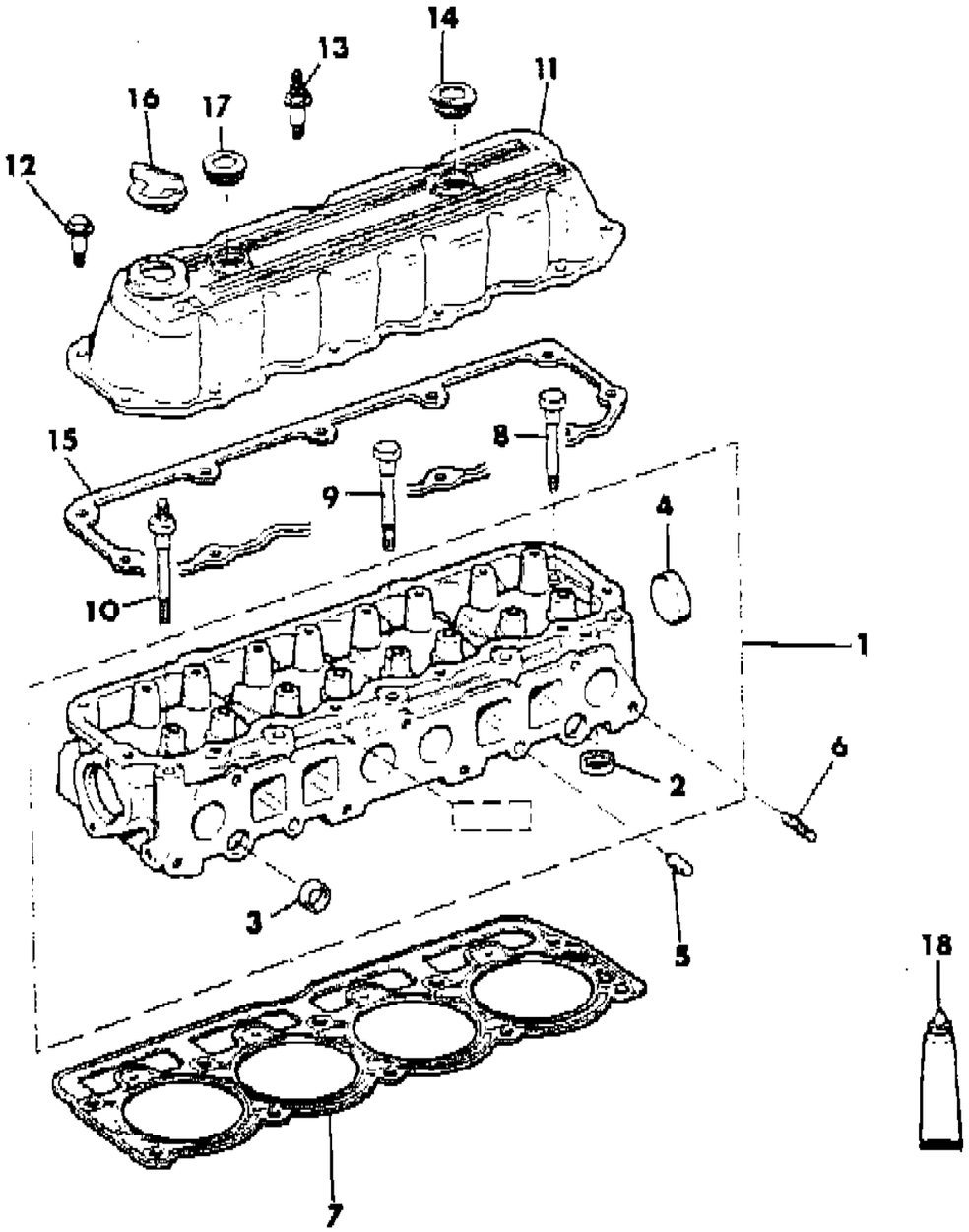

ITEM	PART NUMBER	QTY	BODY	MODEL	DESCRIPTION
1					HEAD, Engine Cylinder
					1984-85
	8350 0675	1			With Part #3242893
	8350 1411	1			With Part #3242684
					1986
	8350 2487	1			With Part #2403
	8350 2488	1			With Part #2405
2	3300 2400	4			SEAT, Exhaust Valve
3	J317 2319	4			PLUG
4	J310 5394	1			PLUG
5	J317 2318	2			PIN
6	J400 3917	2			STUD
7					GASKET
	J324 1649	1			1984-85
	3300 2419	1			1986
8					BOLT
	J400 6593	5			1984-85
	J400 7308	5			1986
9					BOLT
	J400 7170	1			1984-85
	J400 7307	1			1986
10					BOLT, Stud
	J400 6955	AR			1984-85
					1986
	J400 7310	AR			1.00"
	J400 7311	AR			1.38"
11	J324 2121	1			COVER, Cylinder Head
12	S943 2476	8			BOLT
13	J400 7144	3			BOLT, Stud
14	J323 7765	1			GROMMET
15	J324 1731	1			GASKET
16	3300 1016	1			CAP
17	3300 1237	1			GROMMET
18	4318 025	1			SEALER, RTV

MODEL CODES

16=Cherokee 2 Dr.(1981-83)
17=Cherokee 2 Dr.(1981-83)
73=Cherokee 2WD-2 Dr.(1984-86)
74=Cherokee 2WD-4 Dr.(1984-86)
18=Cherokee 4 Dr.(1981-83)
77=Cherokee 4WD-2 Dr.(1984-86)
78=Cherokee 4WD-4 Dr.(1984-86)
85=CJ-5 (1981-83)
86=CJ-6(1981)
87=CJ-7(1981-86)
88=CJ-8, Scrambler(1981-86)
64=Comanche 2WD-6 Ft. Box(1986)
66=Comanche 2WD-7 Ft. Box(1986)
63=Comanche 4WD-6 Ft. Box(1986)
65=Comanche 4WD-7 Ft. Box(1986)
15=Grand Wagoneer 4 Dr.(1984-86)
25=J-10 Truck 7 Ft. Box(1981-84)
26=J10 Truck 8 Ft. Box(1981-86)
27=J-20 Truck 8 Ft. Box(1981-86)
15=Wagoneer 4 Dr.(1981-83)
75=Wagoneer 4WD-4 Dr.(1984-86)

BODY
CJ=CJ-5, CJ-6, CJ-7, CJ-8, Scrambler(1981-86)
MJ=Comanche Pickup(1986)

STYLES
SJ=Wagoneer(1981-83), Grand Wagoneer(1984-86), Cherokee(1981-83), J-10, J-20(1981-86)
XJ=Wagoneer(1984-86), Cherokee(1984-86)

AR = Use as Required - = Non Illustrated Part P.A.R. = Paint as Required

« RETURN TO GROUP INDEX

CRANKSHAFT, FLYWHEEL AND PISTON 1984-86 FOUR CYLINDER GAS XJ CHEROKEE, XJ WAGONEER, COMANCHE
Figure 9A-5300

81J58 5300

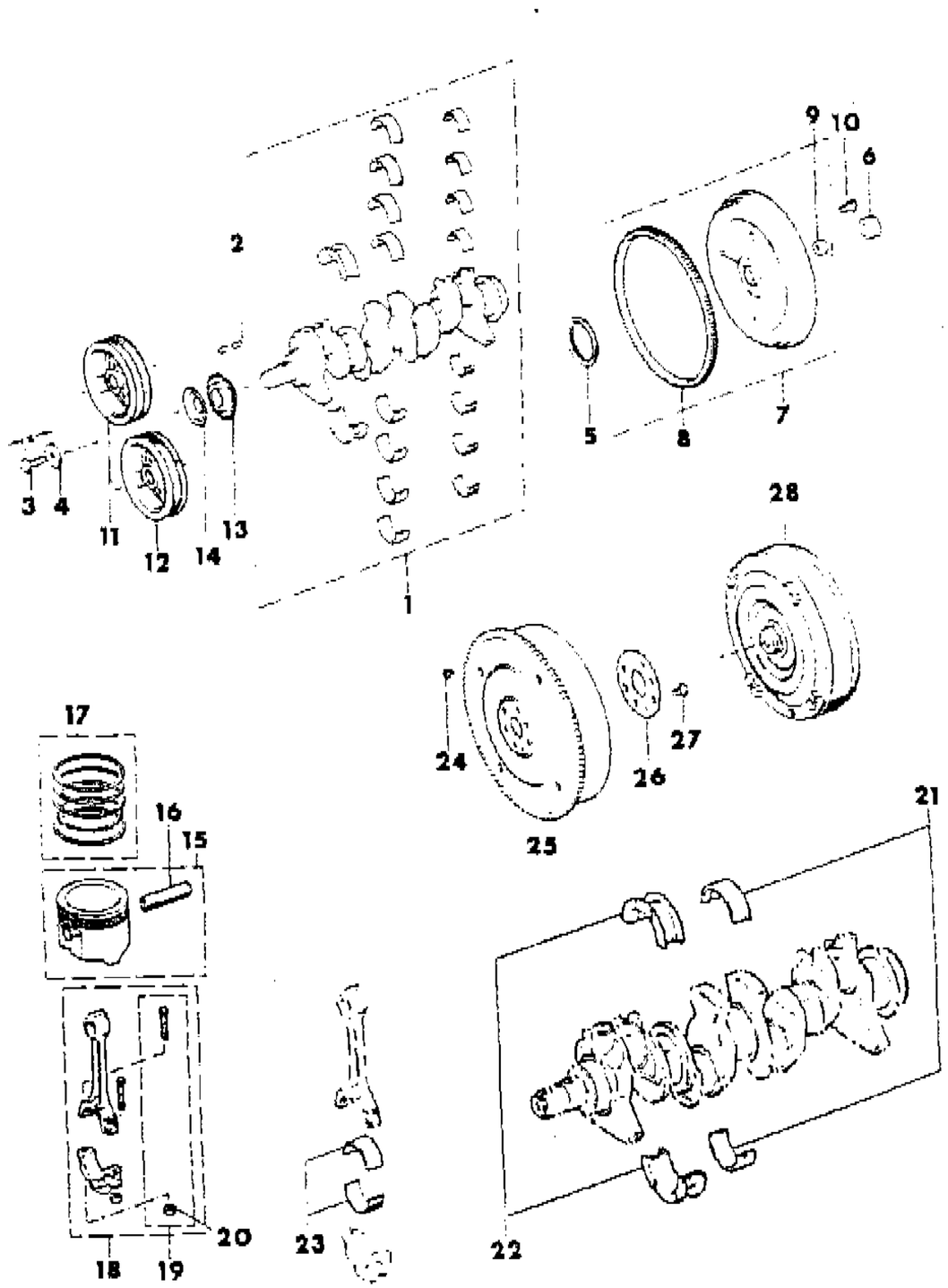

ITEM	PART NUMBER	QTY	BODY	MODEL	DESCRIPTION
1	8350 0242	1			CRANKSHAFT PACKAGE ***
2	J310 7002	2			KEY, Shaft
3	J018 1429	3			BOLT
4	J812 7255	1			WASHER
5					SEAL
	J324 1669	1			1984-85
	3300 4143	1			1986
6	5300 0832	1			BUSHING, With Automatic Transmission
7					FLYWHEEL
	J324 2667	1			With Carburated Engine
	3300 2408	1			With Fuel Injected Engine
8	J324 1718	1			GEAR, Ring, With Manual Transmission
9	J325 0005	1			BEARING, Pilot, With Manual Transmission
10	J400 7123	6			BOLT, With Manual Transmission
11	J324 2885	1			DAMPER, Without Serpentine Belt Drive
12	J324 2886	1			DAMPER, With Serpentine Belt Drive
13					SPROCKET, Crankshaft
	J324 2281	1			1984-85
	3300 4020	1			1986
14	J317 3076	1			SLINGER, Oil ***
15					PISTON PACKAGE ***
	8350 0251	4			Standard
	8350 0252	4			+.010"
16					PIN, Piston
	J318 0483	4			Standard
	8350 0303	4			+.003"
	8350 0304	4			+.005"
17					RING PACKAGE, Piston
	8350 0210	4			Standard
	8350 0211	4			+.010"
18	J323 7816	4			ROD, Connecting
19	J813 3824	8			BOLT PACKAGE ***
20	J400 6385	8			NUT
21					BEARING PACKAGE
	J813 3252	4			Standard
	J813 3680	4			-.001"
	J813 3682	4			-.002"
	J813 3254	4			-.010"
	J813 3684	4			-.012"

MODEL CODES

16=Cherokee 2 Dr.(1981-83)
17=Cherokee 2 Dr.(1981-83)
73=Cherokee 2WD-2 Dr.(1984-86)
74=Cherokee 2WD-4 Dr.(1984-86)
18=Cherokee 4 Dr.(1981-83)
77=Cherokee 4WD-2 Dr.(1984-86)
78=Cherokee 4WD-4 Dr.(1984-86)
85=CJ-5 (1981-83)
86=CJ-6(1981)
87=CJ-7(1981-86)
88=CJ-8, Scrambler(1981-86)
64=Comanche 2WD-6 Ft. Box(1986)
66=Comanche 2WD-7 Ft. Box(1986)
63=Comanche 4WD-6 Ft. Box(1986)
65=Comanche 4WD-7 Ft. Box(1986)
15=Grand Wagoneer 4 Dr.(1984-86)
25=J-10 Truck 7 Ft. Box(1981-84)
26=J10 Truck 8 Ft. Box(1981-86)
27=J-20 Truck 8 Ft. Box(1981-86)
15=Wagoneer 4 Dr.(1981-83)
75=Wagoneer 4WD-4 Dr.(1984-86)

BODY
CJ=CJ-5, CJ-6, CJ-7, CJ-8, Scrambler(1981-86)
MJ=Comanche Pickup(1986)

STYLES
SJ=Wagoneer(1981-83), Grand Wagoneer(1984-86), Cherokee(1981-83), J-10, J-20(1981-86)
XJ=Wagoneer(1984-86), Cherokee(1984-86)

AR = Use as Required - = Non Illustrated Part P.A.R. = Paint as Required

« RETURN TO GROUP INDEX »

CRANKSHAFT, FLYWHEEL AND PISTON 1984-86 FOUR CYLINDER GAS XJ CHEROKEE, XJ WAGONEER, COMANCHE
Figure 9A-5300

81J58 5300

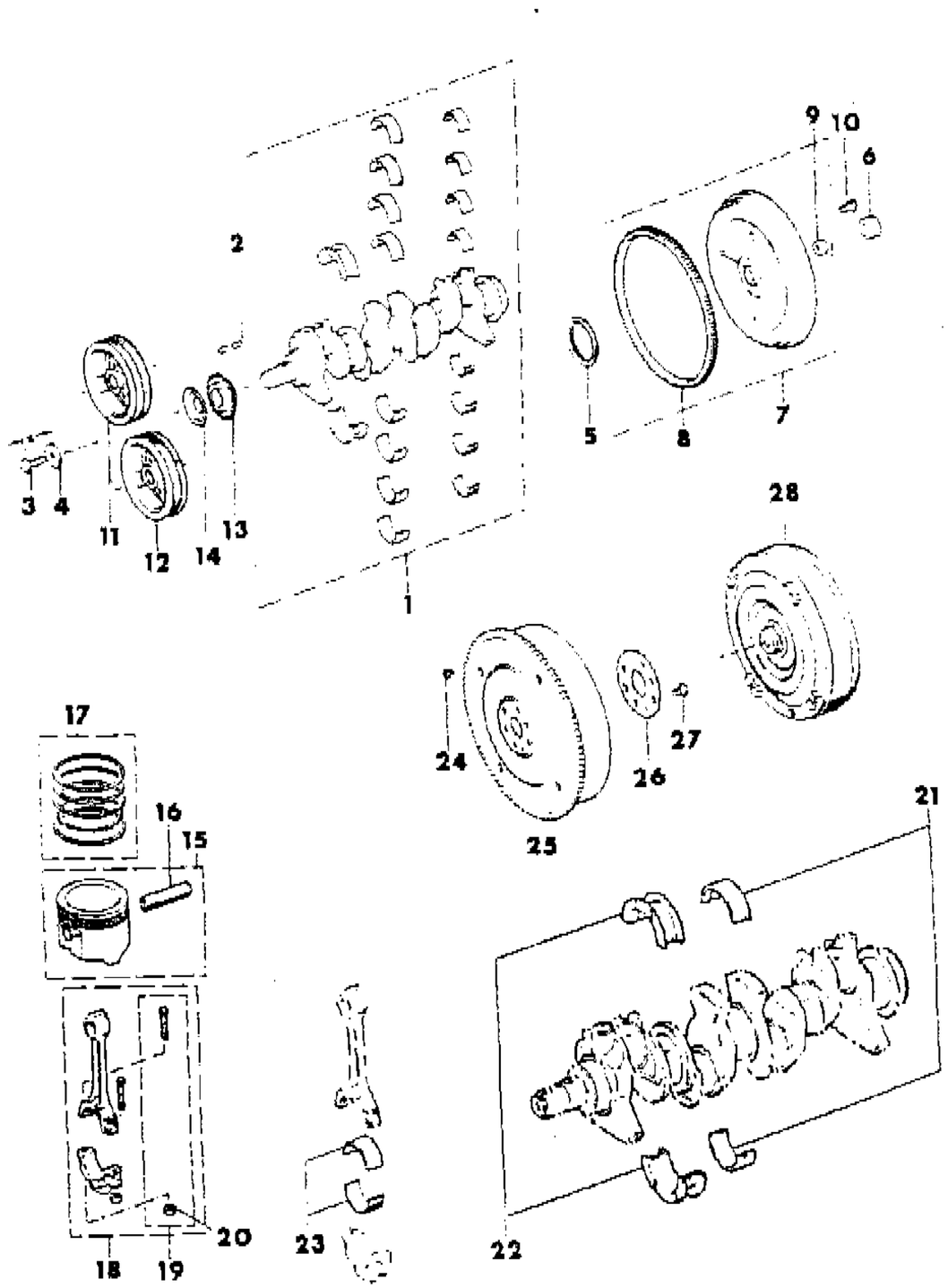

ITEM	PART NUMBER	QTY	BODY	MODEL	DESCRIPTION
22					BEARING PACKAGE
	J813 3253	1			Standard
	J813 3681	1			-.001"
	J813 3683	1			-.002"
	J813 3255	1			-.010"
	J813 3685	1			-.012"
23					BEARING PACKAGE
	8350 0300	4			Standard
	8350 1397	4			-.001"
	8350 0301	4			-.010"
24	J420 0412	4			BOLT
25					PLATE, Converter Drive
	5300 1184	1			1984-85
	5300 1918	1			1986
26					REINFORCEMENT, Flywheel to Torque Converter
	5300 1186	1			1984-85
	5300 2234	1			1986
27	J400 7122	6			BOLT
28					CONVERTER, Transmission
	8277 5039	1			1984-85 Remanufactured
	JR77 5082	1			1986 Remanufactured
	5300 0169	1			EXPORT

MODEL CODES
16=Cherokee 2 Dr.(1981-83)
17=Cherokee 2 Dr.(1981-83)
73=Cherokee 2WD-2 Dr.(1984-86)
74=Cherokee 2WD-4 Dr.(1984-86)
18=Cherokee 4 Dr.(1981-83)
77=Cherokee 4WD-2 Dr.(1984-86)
78=Cherokee 4WD-4 Dr.(1984-86)
85=CJ-5 (1981-83)
86=CJ-6(1981)
87=CJ-7(1981-86)
88=CJ-8, Scrambler(1981-86)
64=Comanche 2WD-6 Ft. Box(1986)
66=Comanche 2WD-7 Ft. Box(1986)
63=Comanche 4WD-6 Ft. Box(1986)
65=Comanche 4WD-7 Ft. Box(1986)
15=Grand Wagoneer 4 Dr.(1984-86)
25=J-10 Truck 7 Ft. Box(1981-84)
26=J10 Truck 8 Ft. Box(1981-86)
27=J-20 Truck 8 Ft. Box(1981-86)
15=Wagoneer 4 Dr.(1981-83)
75=Wagoneer 4WD-4 Dr.(1984-86)

BODY
CJ=CJ-5, CJ-6, CJ-7, CJ-8, Scrambler(1981-86)
MJ=Comanche Pickup(1986)

STYLES
SJ=Wagoneer(1981-83), Grand Wagoneer(1984-86), Cherokee(1981-83), J-10, J-20(1981-86)
XJ=Wagoneer(1984-86), Cherokee(1984-86)

AR = Use as Required - = Non Illustrated Part P.A.R. = Paint as Required

« RETURN TO GROUP INDEX

CAMSHAFT AND VALVES 1984-86 FOUR CYLINDER GAS XJ CHEROKEE, XJ WAGONEER, COMANCHE
Figure 9A-5400

81J58 5400

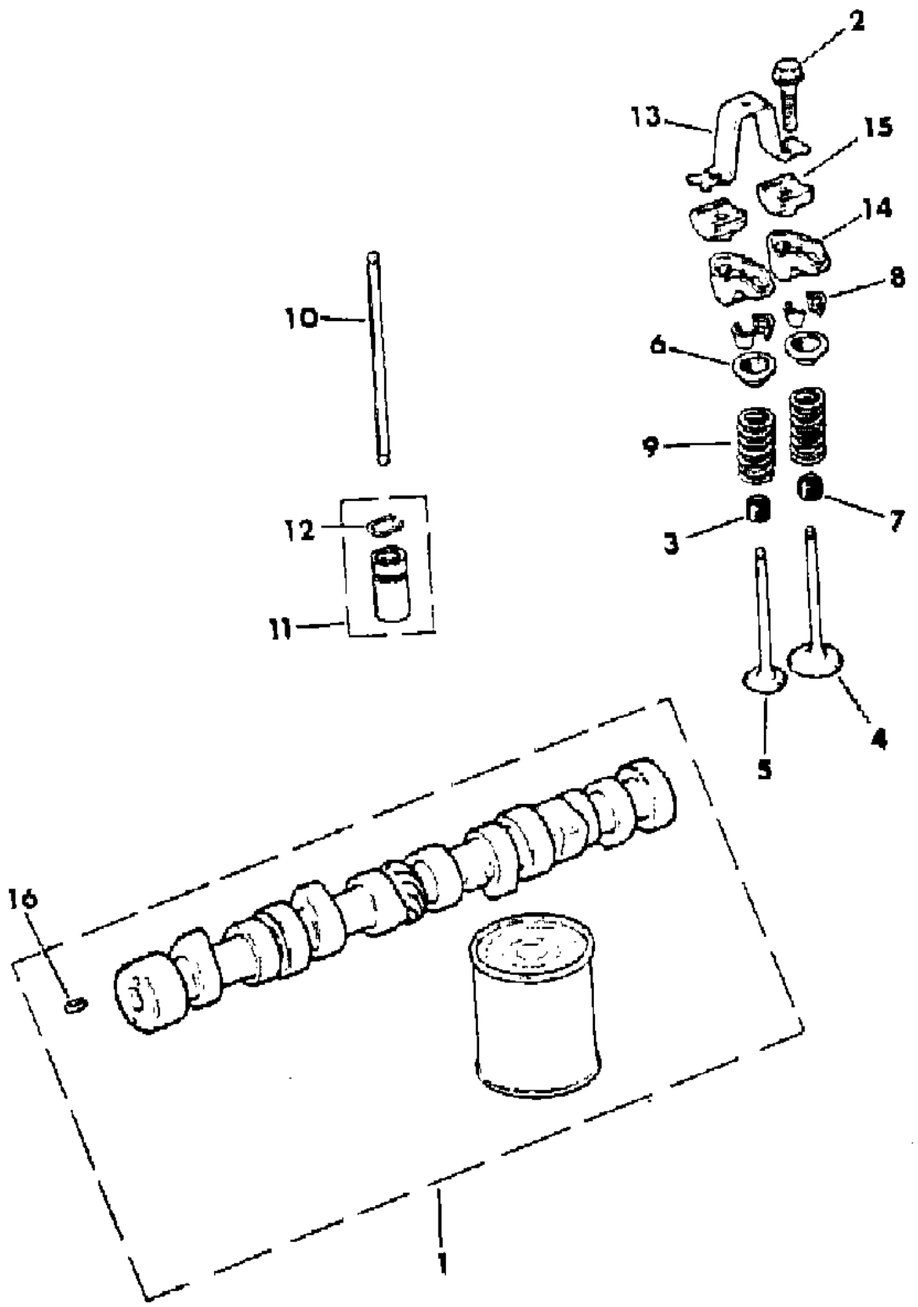

ITEM	PART NUMBER	QTY	BODY	MODEL	DESCRIPTION
1	8350 0249	1			CAMSHAFT
2	J812 0512	8			BOLT
3					SEAL
					Standard
	J324 2864	4			1984-85
	3300 2522	4			1986
					+.003
	J324 2864	4			1984-85
	3300 2522	4			1986
					+.015"
	J324 2865	4			1984-85
	3300 2733	4			1986
4					VALVE, Intake
	J324 2659	4			Standard
	J324 2670	4			+.003"
	J324 2671	4			+.015"
5					VALVE, Exhaust
					Standard
	J324 2896	4			1984-85
	3300 2429	4			1986
					+.003"
	J324 2673	4			1984-85
	8350 2491	4			1986
					.015"
	J324 2674	4			1984-85
	8350 2492	4			1986
6	J324 2661	8			RETAINER
7					SEAL
					Standard
	J324 2891	4			1984-85
	3300 2729	4			1986
					.003"
	J324 2891	4			1984-85
	3300 2729	4			1986
					.015"
	J324 2892	4			1984-85
	3300 3016	4			1986
8	J324 2664	16			KEEPER ***
9	J324 2678	8			SPRING

MODEL CODES

16=Cherokee 2 Dr.(1981-83)
17=Cherokee 2 Dr.(1981-83)
73=Cherokee 2WD-2 Dr.(1984-86)
74=Cherokee 2WD-4 Dr.(1984-86)
18=Cherokee 4 Dr.(1981-83)
77=Cherokee 4WD-2 Dr.(1984-86)
78=Cherokee 4WD-4 Dr.(1984-86)
85=CJ-5 (1981-83)
86=CJ-6(1981)
87=CJ-7(1981-86)
88=CJ-8, Scrambler(1981-86)
64=Comanche 2WD-6 Ft. Box(1986)
66=Comanche 2WD-7 Ft. Box(1986)
63=Comanche 4WD-6 Ft. Box(1986)
65=Comanche 4WD-7 Ft. Box(1986)
15=Grand Wagoneer 4 Dr.(1984-86)
25=J-10 Truck 7 Ft. Box(1981-84)
26=J10 Truck 8 Ft. Box(1981-86)
27=J-20 Truck 8 Ft. Box(1981-86)
15=Wagoneer 4 Dr.(1981-83)
75=Wagoneer 4WD-4 Dr.(1984-86)

BODY
CJ=CJ-5, CJ-6, CJ-7, CJ-8, Scrambler(1981-86)
MJ=Comanche Pickup(1986)

STYLES
SJ=Wagoneer(1981-83), Grand Wagoneer(1984-86), Cherokee(1981-83), J-10, J-20(1981-86)
XJ=Wagoneer(1984-86), Cherokee(1984-86)

AR = Use as Required - = Non Illustrated Part P.A.R. = Paint as Required

« RETURN TO GROUP INDEX »

81J58 5400

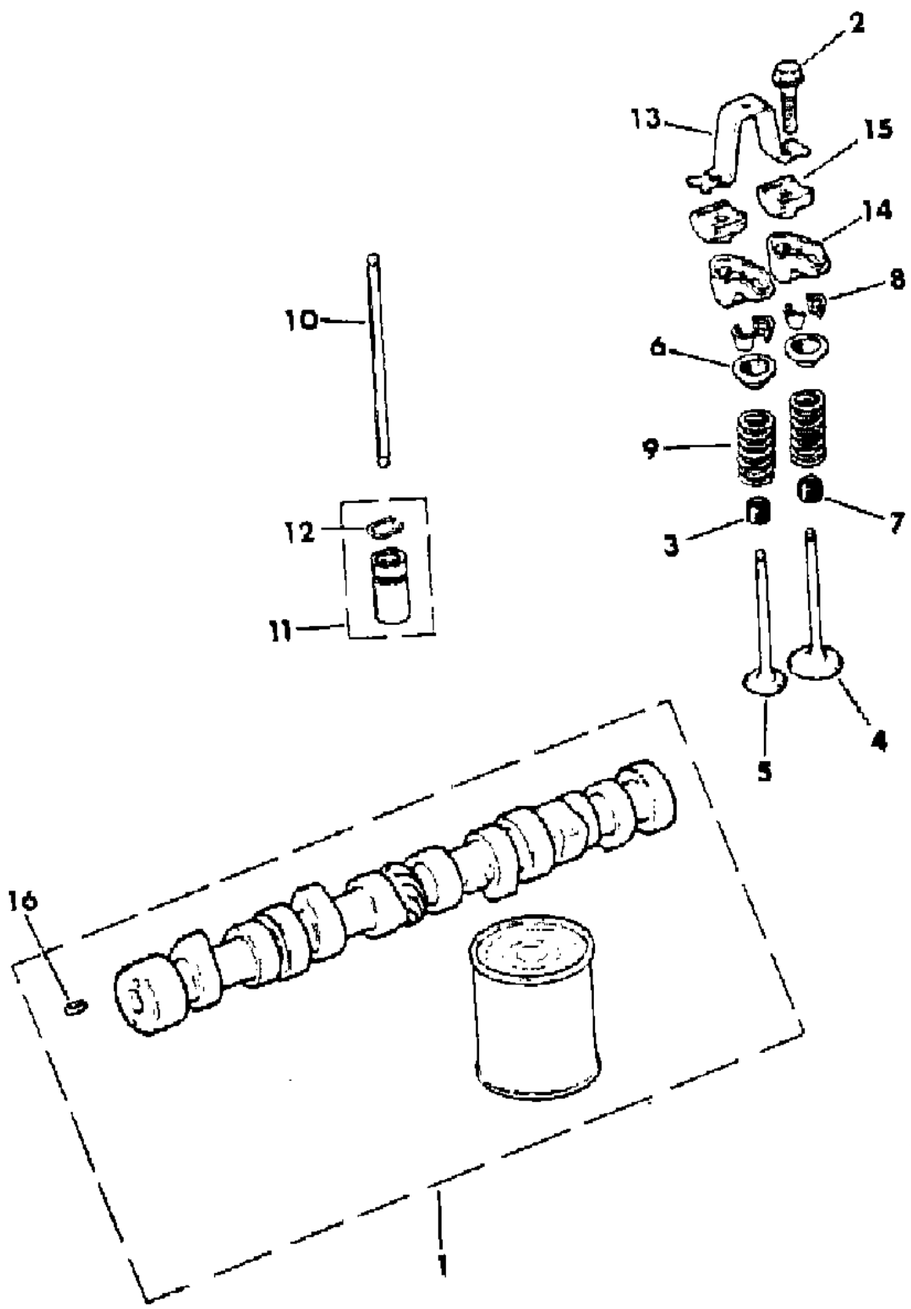

ITEM	PART NUMBER	QTY	BODY	MODEL	DESCRIPTION
10	J324 1709	8			PUSHROD ***
11					TAPPET
	J318 9883	8			1984-85
	J322 2276	8			1986
12	J644 0614	8			RING
13	J323 6513	4			BRIDGE ***
14	J324 2393	8			ARM, Rocker
15	J323 5090	8			PIVOT
16	J045 6384	1			PIN

MODEL CODES

16=Cherokee 2 Dr.(1981-83)
17=Cherokee 2 Dr.(1981-83)
73=Cherokee 2WD-2 Dr.(1984-86)
74=Cherokee 2WD-4 Dr.(1984-86)
18=Cherokee 4 Dr.(1981-83)
77=Cherokee 4WD-2 Dr.(1984-86)
78=Cherokee 4WD-4 Dr.(1984-86)
85=CJ-5 (1981-83)
86=CJ-6(1981)
87=CJ-7(1981-86)
88=CJ-8, Scrambler(1981-86)
64=Comanche 2WD-6 Ft. Box(1986)
66=Comanche 2WD-7 Ft. Box(1986)
63=Comanche 4WD-6 Ft. Box(1986)
65=Comanche 4WD-7 Ft. Box(1986)
15=Grand Wagoneer 4 Dr.(1984-86)
25=J-10 Truck 7 Ft. Box(1981-84)
26=J10 Truck 8 Ft. Box(1981-86)
27=J-20 Truck 8 Ft. Box(1981-86)
15=Wagoneer 4 Dr.(1981-83)
75=Wagoneer 4WD-4 Dr.(1984-86)

BODY
CJ=CJ-5, CJ-6, CJ-7, CJ-8, Scrambler(1981-86)
MJ=Comanche Pickup(1986)

STYLES
SJ=Wagoneer(1981-83), Grand Wagoneer(1984-86), Cherokee(1981-83), J-10, J-20(1981-86)
XJ=Wagoneer(1984-86), Cherokee(1984-86)

AR = Use as Required - = Non Illustrated Part P.A.R. = Paint as Required

TIMING COVER 1984-86 FOUR CYLINDER GAS XJ CHEROKEE, XJ WAGONEER, COMANCHE
Figure 9A-5500

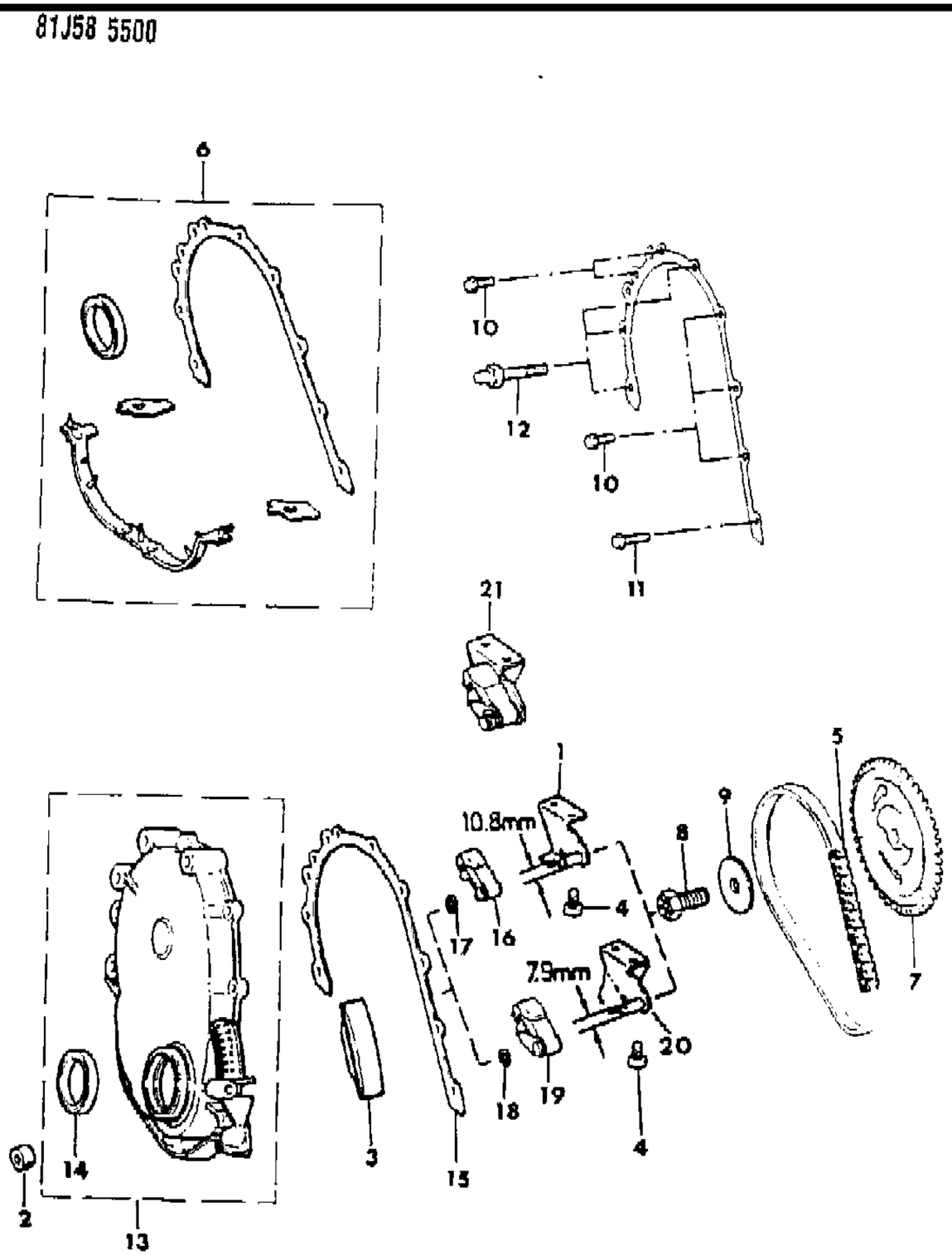

ITEM	PART NUMBER	QTY	BODY	MODEL	DESCRIPTION
1	3300 3423	1			BRACKET
2	3420 2521	1			SPACER
3	J324 2617	1			BUMPER
4	J400 6708	2			SCREW
5	J324 2300	1			CHAIN, Timing
6	J812 9097	1			GASKET PACKAGE
7	J324 2280	1			SPROCKET, Camshaft
8	J317 2308	1			BOLT
9	J317 3284	1			WASHER
10	J400 6906	5			BOLT
11	6034 914	1			BOLT
12	J400 7154	3			BOLT, Stud
13					COVER, Timing Chain
	J324 3096	1			1984-85
	3300 2984	1			1986
14	J322 4704	1			SEAL
15	J322 5187	1			GASKET
16	3300 3422	1			TENSIONER
17	J941 9704	1			CLIP
18	S941 3523	1			CLIP
19	J324 2630	1			TENSIONER
20	J324 2614	1			BRACKET
21	3300 3421	1			TENSIONER ASSEMBLY ***

MODEL CODES

16=Cherokee 2 Dr.(1981-83)
17=Cherokee 2 Dr.(1981-83)
73=Cherokee 2WD-2 Dr.(1984-86)
74=Cherokee 2WD-4 Dr.(1984-86)
18=Cherokee 4 Dr.(1981-83)
77=Cherokee 4WD-2 Dr.(1984-86)
78=Cherokee 4WD-4 Dr.(1984-86)
85=CJ-5 (1981-83)
86=CJ-6(1981)
87=CJ-7(1981-86)
88=CJ-8, Scrambler(1981-86)
64=Comanche 2WD-6 Ft. Box(1986)
66=Comanche 2WD-7 Ft. Box(1986)
63=Comanche 4WD-6 Ft. Box(1986)
65=Comanche 4WD-7 Ft. Box(1986)
15=Grand Wagoneer 4 Dr.(1984-86)
25=J-10 Truck 7 Ft. Box(1981-84)
26=J10 Truck 8 Ft. Box(1981-86)
27=J-20 Truck 8 Ft. Box(1981-86)
15=Wagoneer 4 Dr.(1981-83)
75=Wagoneer 4WD-4 Dr.(1984-86)

BODY
CJ=CJ-5, CJ-6, CJ-7, CJ-8, Scrambler(1981-86)
MJ=Comanche Pickup(1986)

STYLES
SJ=Wagoneer(1981-83), Grand Wagoneer(1984-86), Cherokee(1981-83), J-10, J-20(1981-86)
XJ=Wagoneer(1984-86), Cherokee(1984-86)

AR = Use as Required - = Non Illustrated Part P.A.R. = Paint as Required

« RETURN TO GROUP INDEX

ENGINE OILING 1984-86 FOUR CYLINDER GAS XJ CHEROKEE, XJ WAGONEER, COMANCHE
Figure 9A-5600

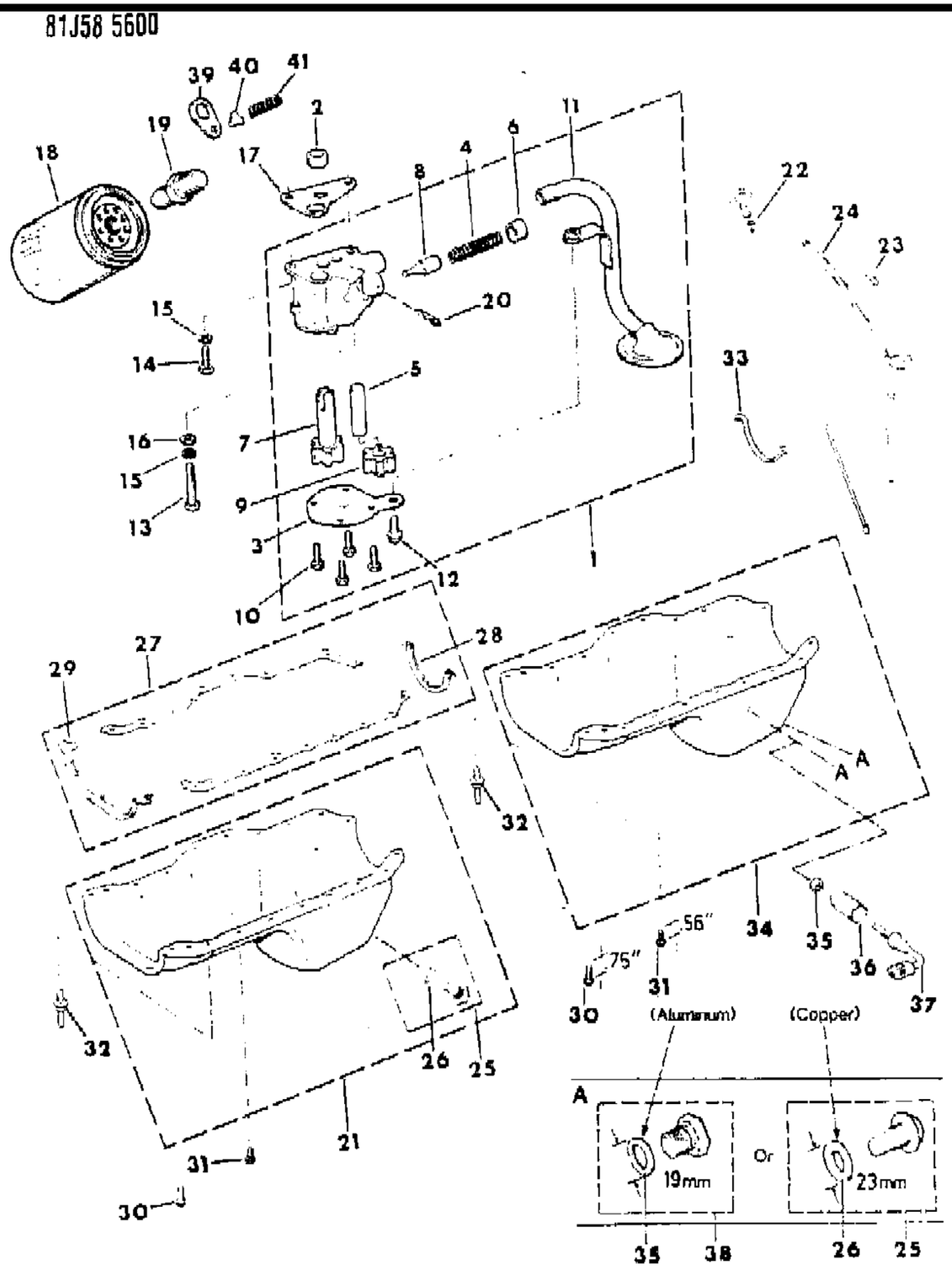

ITEM	PART NUMBER	QTY	BODY	MODEL	DESCRIPTION
1					PUMP, Engine Oil
	J324 1399	1			1984-85
	J324 3102	1			1986
2	J400 5149	1			PIN
3	J324 1733	1			COVER, Oil Pump
4	J323 9668	1			SPRING
5	J317 1956	1			SHAFT, Oil Pump Gear
6	J317 1958	1			RETAINER
7	J317 2334	1			GEAR, Oil Pump Drive
8					PLUNGER, Oil Pump
	J318 8661	1			Standard
	J324 1676	1			+.010"
9	J319 6843	1			GEAR, Oil Driven
10	J812 2990	4			SCREW
11					TUBE, Oil Pump Inlet
	J324 1617	1			1984-85
	J324 3111	1			1986
12	J400 6909	1			BOLT
13	J943 7670	1			BOLT
14	S942 7934	1			BOLT
15	J012 0214	2			WASHER, Lock
16	J012 0393	1			WASHER
17	J317 2332	1			GASKET
18	J813 2313	1			FILTER, Engine Oil
19	J324 1335	1			CONNECTOR
20	S010 8635	1			PIN, Cotter
21	5302 0205	1			PAN, Engine Oil 1986-93
22					INDICATOR, Engine Oil Level
	J324 1752	1			1984-85
	3300 2407	1			1986
23	J027 3573	1			BOLT
24	J324 1748	1			TUBE, Engine Oil Indicator
25	8350 1425	2			PLUG PACKAGE
26	J324 3136	2			GASKET
27					GASKET PACKAGE
	8350 0270	1			1984-85
	8350 4661	1			1986
28	J324 1609	1			SEAL
29					SEAL

MODEL CODES
16=Cherokee 2 Dr.(1981-83)
17=Cherokee 2 Dr.(1981-83)
73=Cherokee 2WD-2 Dr.(1984-86)
74=Cherokee 2WD-4 Dr.(1984-86)
18=Cherokee 4 Dr.(1981-83)
77=Cherokee 4WD-2 Dr.(1984-86)
78=Cherokee 4WD-4 Dr.(1984-86)
85=CJ-5 (1981-83)
86=CJ-6(1981)
87=CJ-7(1981-86)
88=CJ-8, Scrambler(1981-86)
64=Comanche 2WD-6 Ft. Box(1986)
66=Comanche 2WD-7 Ft. Box(1986)
63=Comanche 4WD-6 Ft. Box(1986)
65=Comanche 4WD-7 Ft. Box(1986)
15=Grand Wagoneer 4 Dr.(1984-86)
25=J-10 Truck 7 Ft. Box(1981-84)
26=J10 Truck 8 Ft. Box(1981-86)
27=J-20 Truck 8 Ft. Box(1981-86)
15=Wagoneer 4 Dr.(1981-83)
75=Wagoneer 4WD-4 Dr.(1984-86)

BODY
CJ=CJ-5, CJ-6, CJ-7, CJ-8, Scrambler(1981-86)
MJ=Comanche Pickup(1986)

STYLES
SJ=Wagoneer(1981-83), Grand Wagoneer(1984-86), Cherokee(1981-83), J-10, J-20(1981-86)
XJ=Wagoneer(1984-86), Cherokee(1984-86)

AR = Use as Required - = Non Illustrated Part P.A.R. = Paint as Required

« RETURN TO GROUP INDEX »

ENGINE OILING 1984-86 FOUR CYLINDER GAS XJ CHEROKEE, XJ WAGONEER, COMANCHE
Figure 9A-5600

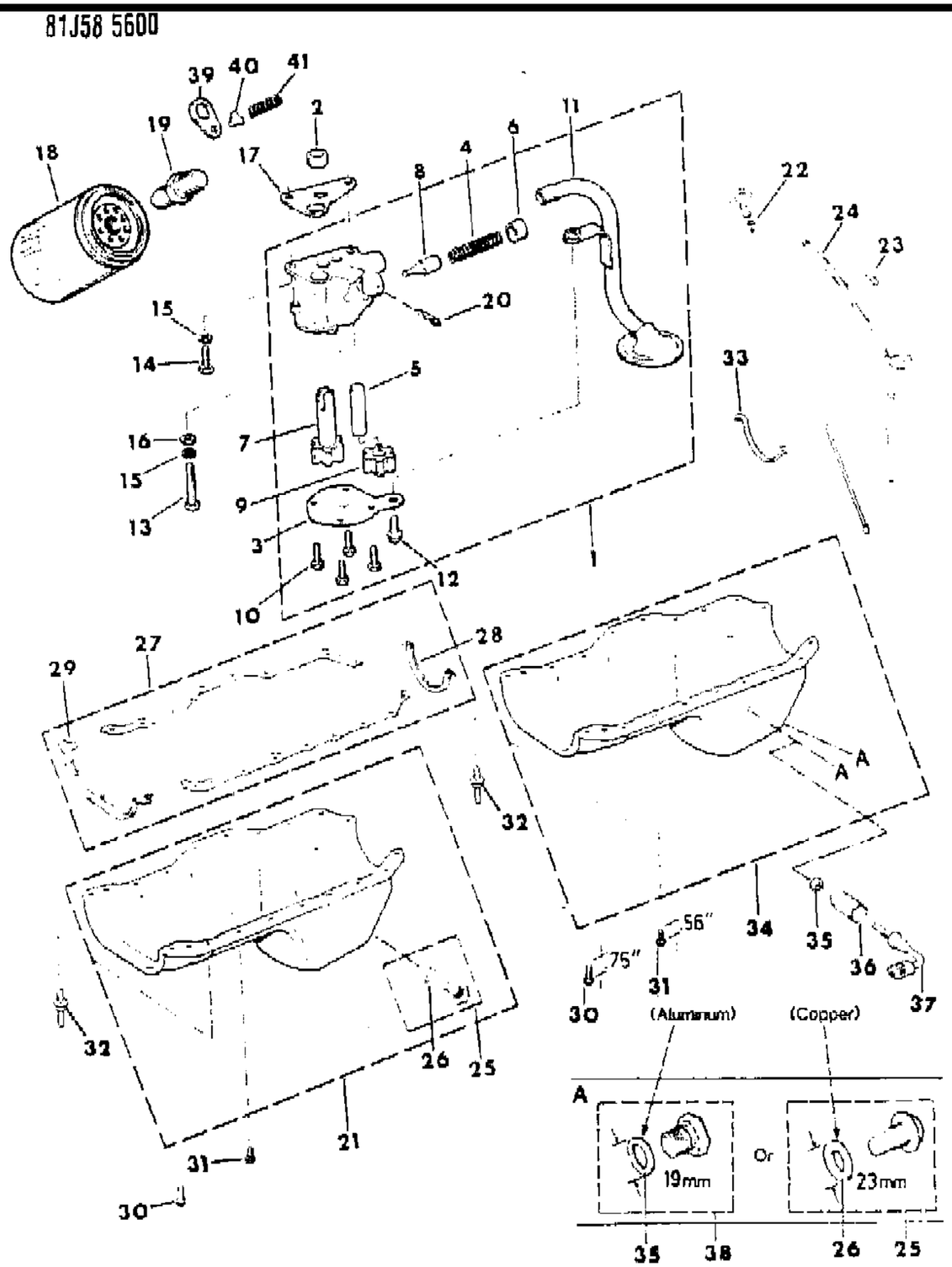

ITEM	PART NUMBER	QTY	BODY	MODEL	DESCRIPTION
	J317 2848	1			1984-85
	8350 4654	1			1986
30	J400 6297	4			SCREW
31	J400 6296	17			SCREW
32	J400 7178	2			BOLT, Stud
33	J324 3116	1			SUPPORT
34	J324 3140	1		MJ,XJ	PAN, Engine Oil 83-85
35	3300 0322	2			GASKET, Aluminum
36	J324 2446	1			SHIELD, Oil Lever Sensor
37	5300 0376	1			SENSOR, Engine Oil Level
38	8350 0271	2			PLUG PACKAGE
39	J317 3225	1			RETAINER
40	J317 3203	1			VALVE
41	J317 3224	1			SPRING

MODEL CODES

16=Cherokee 2 Dr.(1981-83)
17=Cherokee 2 Dr.(1981-83)
73=Cherokee 2WD-2 Dr.(1984-86)
74=Cherokee 2WD-4 Dr.(1984-86)
18=Cherokee 4 Dr.(1981-83)
77=Cherokee 4WD-2 Dr.(1984-86)
78=Cherokee 4WD-4 Dr.(1984-86)
85=CJ-5 (1981-83)
86=CJ-6(1981)
87=CJ-7(1981-86)
88=CJ-8, Scrambler(1981-86)
64=Comanche 2WD-6 Ft. Box(1986)
66=Comanche 2WD-7 Ft. Box(1986)
63=Comanche 4WD-6 Ft. Box(1986)
65=Comanche 4WD-7 Ft. Box(1986)
15=Grand Wagoneer 4 Dr.(1984-86)
25=J-10 Truck 7 Ft. Box(1981-84)
26=J10 Truck 8 Ft. Box(1981-86)
27=J-20 Truck 8 Ft. Box(1981-86)
15=Wagoneer 4 Dr.(1981-83)
75=Wagoneer 4WD-4 Dr.(1984-86)

BODY
CJ=CJ-5, CJ-6, CJ-7, CJ-8, Scrambler(1981-86)
MJ=Comanche Pickup(1986)

STYLES
SJ=Wagoneer(1981-83), Grand Wagoneer(1984-86), Cherokee(1981-83), J-10, J-20(1981-86)
XJ=Wagoneer(1984-86), Cherokee(1984-86)

AR = Use as Required - = Non Illustrated Part P.A.R. = Paint as Required

« RETURN TO GROUP INDEX

MANIFOLD, INTAKE AND EXHAUST, CARBURATED 1984-86 FOUR CYLINDER GAS XJ CHEROKEE, XJ WAGONEER, COMANCHE
Figure 9A-5700

81J58 5700

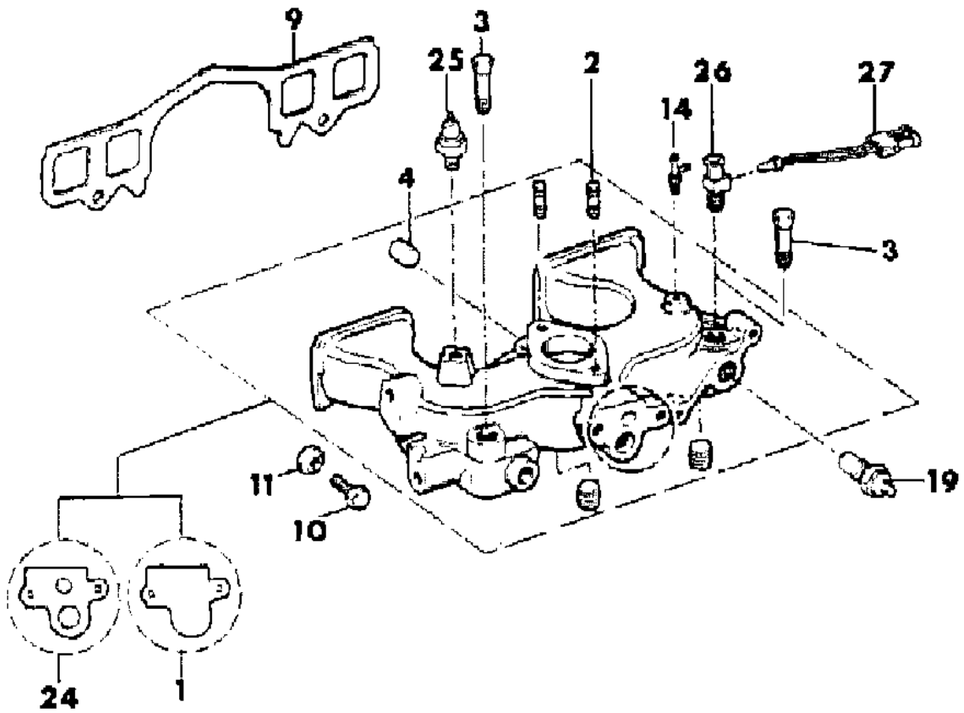

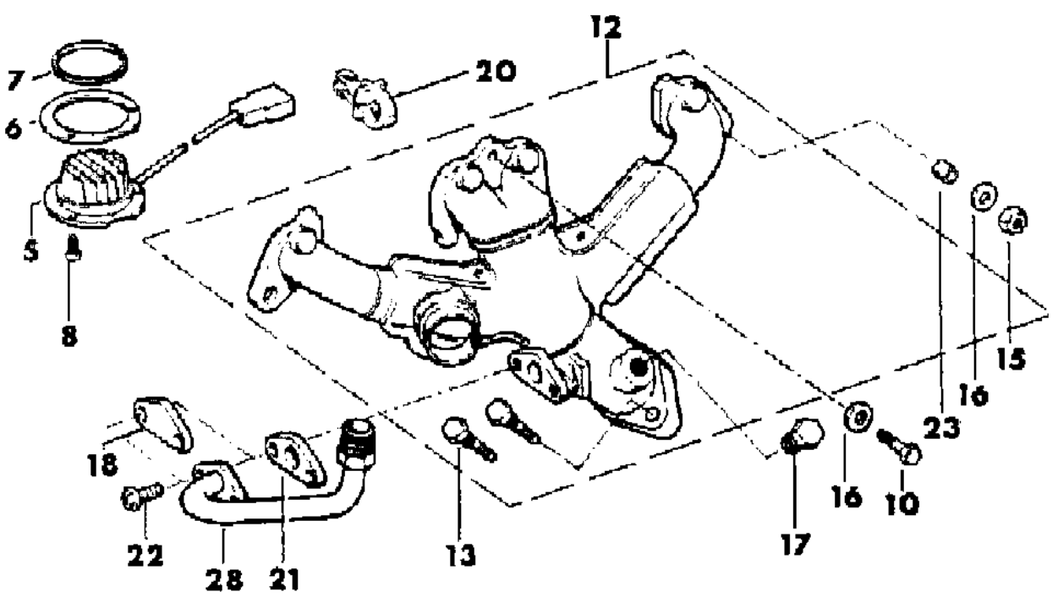

ITEM	PART NUMBER	QTY	BODY	MODEL	DESCRIPTION
1	8350 1410	1			MANIFOLD, Intake
2	J400 6957	2			STUD
3	J314 2368	2			NIPPLE
4	S940 9961	3			PLUG
5	3300 2466	1			HEATER, Early Fuel Evaporation
6	J323 8909	1			GASKET
7	J420 0431	1			O-RING
8	J018 0016	3			BOLT
9	J324 2854	1			GASKET
10	J018 6622	5			BOLT
11	J318 9219	4			WASHER, Clamp
12					MANIFOLD, Exhaust
	J324 2625	1			1984-85
	4713 055	1			1986
13	J400 7109	2			STUD
14	3300 1089	1			FITTING, Vacuum
15	J314 9892	2			NUT
16	J317 3077	3			WASHER
17	J420 0413	1			PLUG
18	J324 2583	1			COVER, EGR Port
19	J324 2321	1			SWITCH, Early Fuel Evaporation
20	3420 1633	1			CLIP
21	J324 1652	1			GASKET
22	J400 6985	2			BOLT
23	3300 3332	2			SPACER
24	8350 0269	1			MANIFOLD, Intake
25	5300 0300	1			SENSOR, Knock
26	5300 0680	1			FITTING, Cold Temperature Switch
27	3300 1979	1			SWITCH, Coolant Temperature FFB
28	J324 1651	1			TUBE, EGR

MODEL CODES

16=Cherokee 2 Dr.(1981-83)
17=Cherokee 2 Dr.(1981-83)
73=Cherokee 2WD-2 Dr.(1984-86)
74=Cherokee 2WD-4 Dr.(1984-86)
18=Cherokee 4 Dr.(1981-83)
77=Cherokee 4WD-2 Dr.(1984-86)
78=Cherokee 4WD-4 Dr.(1984-86)
85=CJ-5 (1981-83)
86=CJ-6(1981)
87=CJ-7(1981-86)
88=CJ-8, Scrambler(1981-86)
64=Comanche 2WD-6 Ft. Box(1986)
66=Comanche 2WD-7 Ft. Box(1986)
63=Comanche 4WD-6 Ft. Box(1986)
65=Comanche 4WD-7 Ft. Box(1986)
15=Grand Wagoneer 4 Dr.(1984-86)
25=J-10 Truck 7 Ft. Box(1981-84)
26=J10 Truck 8 Ft. Box(1981-86)
27=J-20 Truck 8 Ft. Box(1981-86)
15=Wagoneer 4 Dr.(1981-83)
75=Wagoneer 4WD-4 Dr.(1984-86)

BODY
CJ=CJ-5, CJ-6, CJ-7, CJ-8, Scrambler(1981-86)
MJ=Comanche Pickup(1986)

STYLES
SJ=Wagoneer(1981-83), Grand Wagoneer(1984-86), Cherokee(1981-83), J-10, J-20(1981-86)
XJ=Wagoneer(1984-86), Cherokee(1984-86)

AR = Use as Required - = Non Illustrated Part P.A.R. = Paint as Required

« RETURN TO GROUP INDEX

MANIFOLD, INTAKE AND EXHAUST, INJECTED 1984-86 FOUR CYLINDER GAS XJ CHEROKEE, XJ WAGONEER, COMANCHE
Figure 9A-5800

81J58 5800

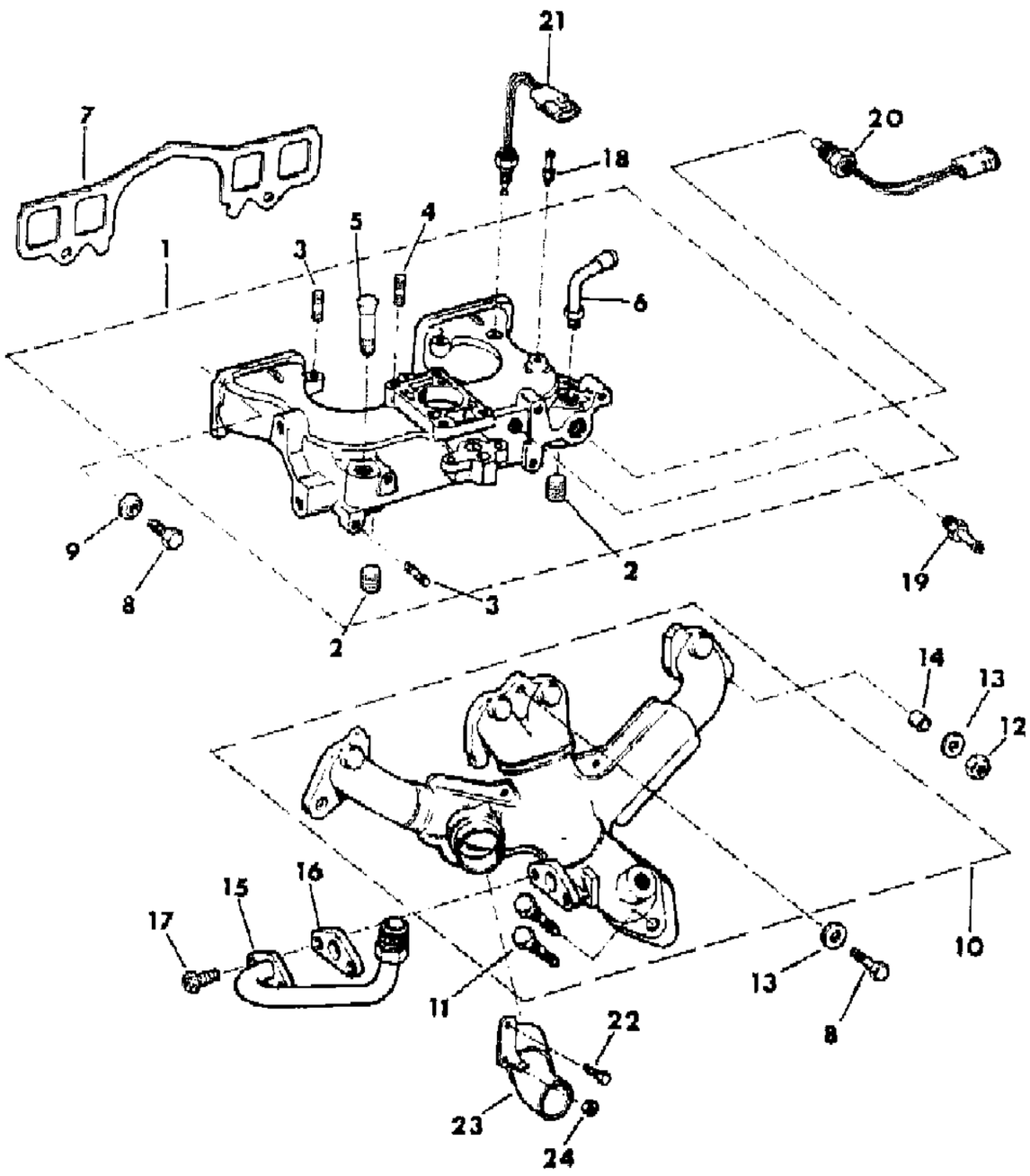

ITEM	PART NUMBER	QTY	BODY	MODEL	DESCRIPTION
1	J324 3145	1			MANIFOLD, Intake
2	S940 9961	2			PLUG
3	J400 1617	2			STUD
4	J400 7314	4			STUD
5	J314 2368	1			NIPPLE, Straight
6	3300 2501	1			NIPPLE, Elbow
7	J324 2854	1			GASKET
8	J018 6622	5			BOLT
9	8350 4222	4			CLAMP
10	4713 055	1			MANIFOLD, Exhaust
11	J400 7109	2			STUD
12	J314 9892	2			NUT
13	J313 3077	3			WASHER
14	3300 3332	2			SPACER
15	3300 2516	1			TUBE, EGR
16	J324 1652	1			GASKET
17	J400 6985	2			BOLT
18	5300 2726	1			FITTING, Vacuum
19	3300 2327	1			FITTING, Vacuum
20	3300 2383	1			SENSOR, Coolant Temp
21	3300 2382	1			SENSOR, Intake Air Temp
22	J027 3573	1			BOLT
23	3300 2907	1			TUBE, Shroud Extension
24	J400 6080	1			NUT

MODEL CODES

16=Cherokee 2 Dr.(1981-83)
17=Cherokee 2 Dr.(1981-83)
73=Cherokee 2WD-2 Dr.(1984-86)
74=Cherokee 2WD-4 Dr.(1984-86)
18=Cherokee 4 Dr.(1981-83)
77=Cherokee 4WD-2 Dr.(1984-86)
78=Cherokee 4WD-4 Dr.(1984-86)
85=CJ-5 (1981-83)
86=CJ-6(1981)
87=CJ-7(1981-86)
88=CJ-8, Scrambler(1981-86)
64=Comanche 2WD-6 Ft. Box(1986)
66=Comanche 2WD-7 Ft. Box(1986)
63=Comanche 4WD-6 Ft. Box(1986)
65=Comanche 4WD-7 Ft. Box(1986)
15=Grand Wagoneer 4 Dr.(1984-86)
25=J-10 Truck 7 Ft. Box(1981-84)
26=J10 Truck 8 Ft. Box(1981-86)
27=J-20 Truck 8 Ft. Box(1981-86)
15=Wagoneer 4 Dr.(1981-83)
75=Wagoneer 4WD-4 Dr.(1984-86)

BODY
CJ=CJ-5, CJ-6, CJ-7, CJ-8, Scrambler(1981-86)
MJ=Comanche Pickup(1986)

STYLES
SJ=Wagoneer(1981-83), Grand Wagoneer(1984-86), Cherokee(1981-83), J-10, J-20(1981-86)
XJ=Wagoneer(1984-86), Cherokee(1984-86)

AR = Use as Required - = Non Illustrated Part P.A.R. = Paint as Required

« RETURN TO GROUP INDEX

ENGINE MOUNTING 1984-86 FOUR CYLINDER GAS XJ CHEROKEE, XJ WAGONEER, COMANCHE
Figure 9A-5900

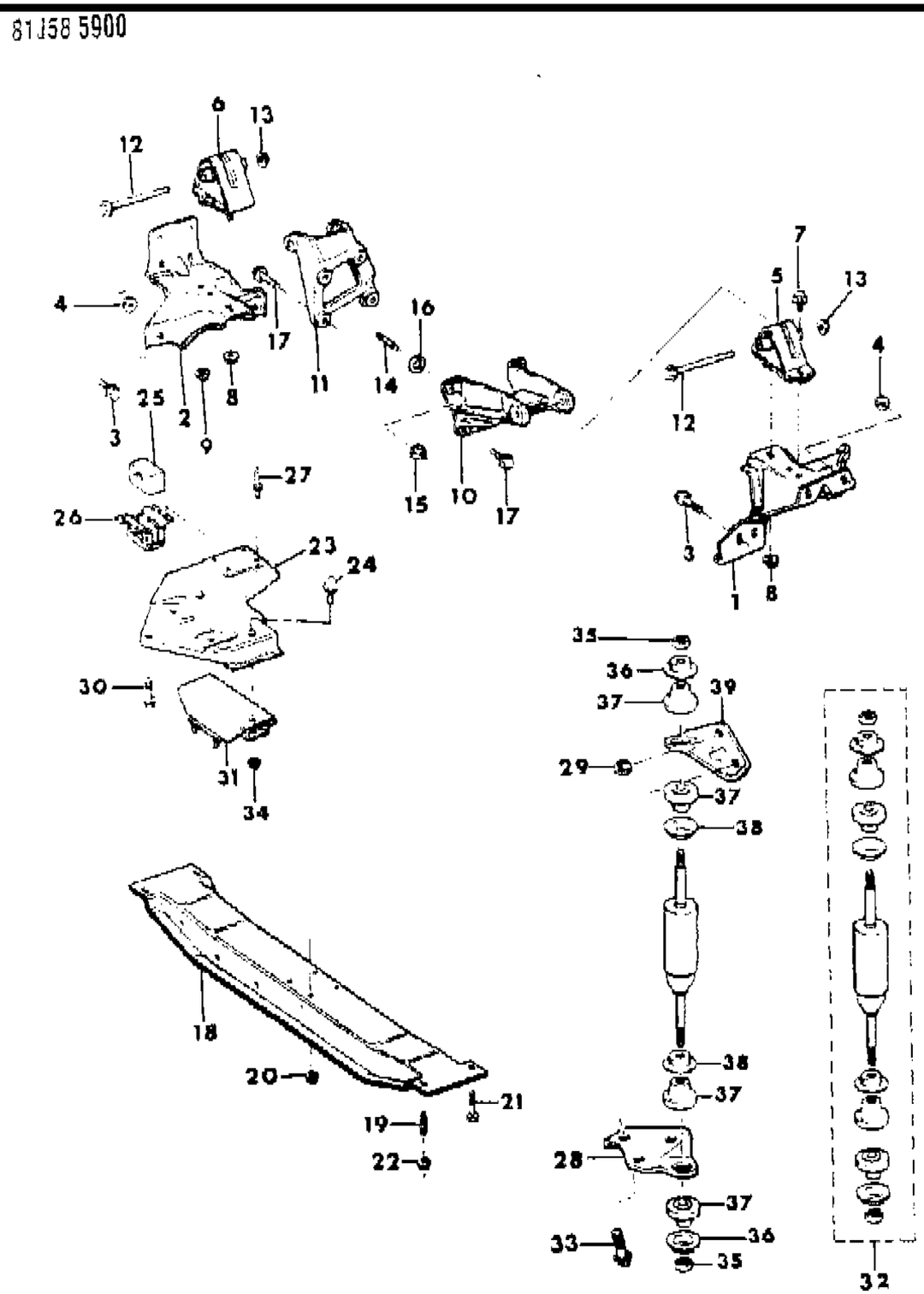

ITEM	PART NUMBER	QTY	BODY	MODEL	DESCRIPTION
1					BRACKET, Engine, Left
	5200 0570	1			1984-85
	5200 3005	1			1986
2	5200 0572	1			BRACKET, Engine, Right
3	3420 2037	5			BOLT
4	3420 1416	4			NUT
5	5200 0074	1			MOUNT, Engine, Left ***
6	J324 2711	1			MOUNT, Engine, Right ***
7	3420 1559	AR			BOLT
8	3420 1828	2			NUT
9	1150 2812	AR			NUT
10	5200 0079	1			BRACKET, Engine, Left
11					BRACKET, Engine, Right
	5200 0728	1			With Manual Transmission
	5200 1183	1			With Automatic Transmission
12	3420 1556	2			BOLT
13	1150 2813	2			NUT
14	J400 4110	1			STUD
15	J400 6653	1			NUT
16					WASHER, Spacer
	J400 6839	1			Without Power Steering, .16" thick
	J400 6994	1			With Power Steering, .04" thick
17	J400 6999	7			BOLT
18					CROSSMEMBER, Transmission Support
	5200 0345	1			1984-85
	5200 1308	1			1986
19	3420 1710	2			STUD
20	1150 2811	4			NUT
21	3420 1540	AR			BOLT
22	1150 2812	4			NUT
23					BRACKET, Transmission Support Rear
					Manual
	5200 0675	1			1984: Four Speed Tagged 53001547, 53001548
	5200 0675	1			1984: Five Speed Tagged 53001551, 53001552
	5200 1147	1			1984-85: Four Speed Tagged 53001565
	5200 1147	1			1984-85: Five Speed Tagged 53001566
	5200 1505	1			1985: Five Speed Tagged 53001190
	5200 1147	1			1986
					Automatic

MODEL CODES

16=Cherokee 2 Dr.(1981-83)
17=Cherokee 2 Dr.(1981-83)
73=Cherokee 2WD-2 Dr.(1984-86)
74=Cherokee 2WD-4 Dr.(1984-86)
18=Cherokee 4 Dr.(1981-83)
77=Cherokee 4WD-2 Dr.(1984-86)
78=Cherokee 4WD-4 Dr.(1984-86)
85=CJ-5 (1981-83)
86=CJ-6(1981)
87=CJ-7(1981-86)
88=CJ-8, Scrambler(1981-86)
64=Comanche 2WD-6 Ft. Box(1986)
66=Comanche 2WD-7 Ft. Box(1986)
63=Comanche 4WD-6 Ft. Box(1986)
65=Comanche 4WD-7 Ft. Box(1986)
15=Grand Wagoneer 4 Dr.(1984-86)
25=J-10 Truck 7 Ft. Box(1981-84)
26=J10 Truck 8 Ft. Box(1981-86)
27=J-20 Truck 8 Ft. Box(1981-86)
15=Wagoneer 4 Dr.(1981-83)
75=Wagoneer 4WD-4 Dr.(1984-86)

BODY
CJ=CJ-5, CJ-6, CJ-7, CJ-8, Scrambler(1981-86)
MJ=Comanche Pickup(1986)

STYLES
SJ=Wagoneer(1981-83), Grand Wagoneer(1984-86), Cherokee(1981-83), J-10, J-20(1981-86)
XJ=Wagoneer(1984-86), Cherokee(1984-86)

AR = Use as Required - = Non Illustrated Part P.A.R. = Paint as Required

« RETURN TO GROUP INDEX »

ENGINE MOUNTING 1984-86 FOUR CYLINDER GAS XJ CHEROKEE, XJ WAGONEER, COMANCHE
Figure 9A-5900

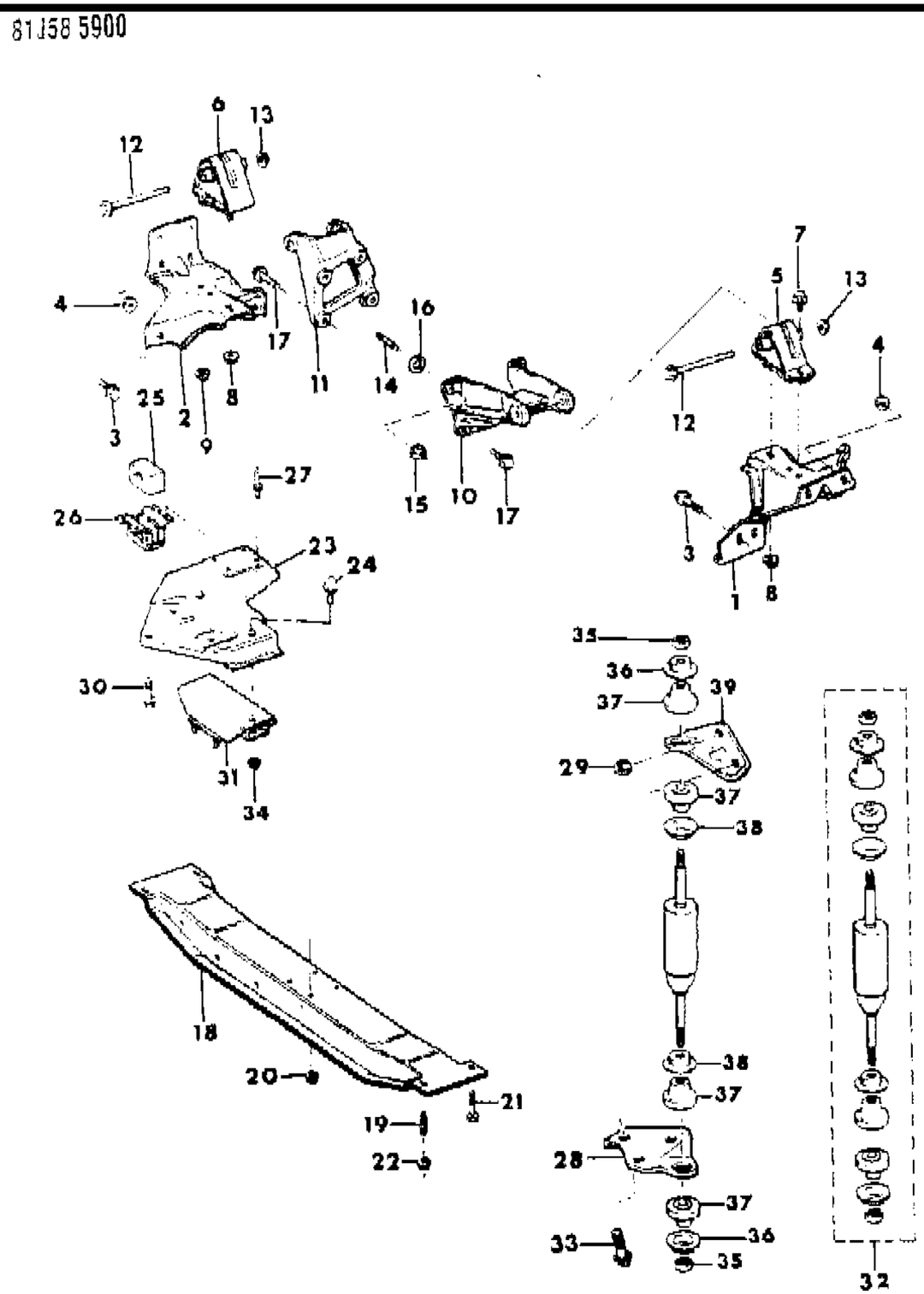

ITEM	PART NUMBER	QTY	BODY	MODEL	DESCRIPTION
	5200 1017	1			Four Wheel Drive
	5200 1754	1			Two Wheel Drive
24	S150 2788	2			BOLT
25	5300 0101	1			INSULATOR
26	5300 0104	1			BRACKET
27					RIVET
	3420 1629	4			Manual Transmission
	3420 1980	4			Automatic Transmission
28					BRACKET, Shock Absorber
	5200 1102	1			Steel
	5200 1372	1			Cast
29	J400 4008	2			NUT
30					BOLT
	J400 7155	3			1984-85: Manual Transmission
	J400 7162	2			1984-85: Automatic Transmission
	1150 3480	2			1986: Automatic Transmission
31					CUSHION, Transmission Support Rear
	5200 1313	1			Manual Transmission, Two Wheel Drive, Blue
	5200 1180	1			Manual Transmission, Four Wheel Drive, Yellow
	5200 2334	1			Automatic Transmission, Purple
32	8350 0358	1			SHOCK ASBORBER PACKAGE, Engine ***
33					BOLT
	3420 1321	3			25mm long
	3420 2114	3			35mm long
	3420 2060	3			45mm long
34					NUT
	1150 2812	2			Manual Transmission
	1150 2813	2			Automatic Transmission
35	J012 0368	2			NUT
36	5200 0819	2			RETAINER, Outer
37	5200 0619	4			BUSHING
38	5200 0820	2			RETAINER, Inner
39	5200 1146	1			BRACKET, Shock Absorber

MODEL CODES

16=Cherokee 2 Dr.(1981-83)
17=Cherokee 2 Dr.(1981-83)
73=Cherokee 2WD-2 Dr.(1984-86)
74=Cherokee 2WD-4 Dr.(1984-86)
18=Cherokee 4 Dr.(1981-83)
77=Cherokee 4WD-2 Dr.(1984-86)
78=Cherokee 4WD-4 Dr.(1984-86)
85=CJ-5 (1981-83)
86=CJ-6(1981)
87=CJ-7(1981-86)
88=CJ-8, Scrambler(1981-86)
64=Comanche 2WD-6 Ft. Box(1986)
66=Comanche 2WD-7 Ft. Box(1986)
63=Comanche 4WD-6 Ft. Box(1986)
65=Comanche 4WD-7 Ft. Box(1986)
15=Grand Wagoneer 4 Dr.(1984-86)
25=J-10 Truck 7 Ft. Box(1981-84)
26=J10 Truck 8 Ft. Box(1981-86)
27=J-20 Truck 8 Ft. Box(1981-86)
15=Wagoneer 4 Dr.(1981-83)
75=Wagoneer 4WD-4 Dr.(1984-86)

BODY
CJ=CJ-5, CJ-6, CJ-7, CJ-8, Scrambler(1981-86)
MJ=Comanche Pickup(1986)

STYLES
SJ=Wagoneer(1981-83), Grand Wagoneer(1984-86), Cherokee(1981-83), J-10, J-20(1981-86)
XJ=Wagoneer(1984-86), Cherokee(1984-86)

AR = Use as Required - = Non Illustrated Part P.A.R. = Paint as Required

« RETURN TO GROUP INDEX

ILLUSTRATION NOT AVAILABLE AT TIME OF PUBLICATION

GROUP 9B - ENGINE, 6 CYLINDER

ILLUSTRATION TITLE	GROUP-FIG. NO.
CJ 6 CYLINDER ENGINE	
ENGINE SIX CYLINDER CJ-5,6,7,8, SCRAMBLER	Fig. 9B-100
BLOCK, ENGINE CJ-5,6,7,8, SCRAMBLER	Fig. 9B-200
GASKET SET CJ-5,6,7,8, SCRAMBLER	Fig. 9B-300
CYLINDER HEAD CJ-5,6,7,8, SCRAMBLER	Fig. 9B-400
CRANKSHAFT, FLYWHEEL AND PISTON CJ-5,6,7,8, SCRAMBLER	Fig. 9B-500
CAMSHAFT AND VALVES CJ-5,6,7,8, SCRAMBLER	Fig. 9B-600
TIMING COVER CJ-5,6,7,8, SCRAMBLER	Fig. 9B-700
ENGINE OILING CJ-5,6,7,8, SCRAMBLER	Fig. 9B-800
ENGINE OIL FILTER, REMOTE SEVERE USE CJ-5,6,7,8, SCRAMBLER	Fig. 9B-900
MANIFOLD, INTAKE AND EXHAUST CJ-5,6,7,8, SCRAMBLER	Fig. 9B-1000
ENGINE MOUNTING CJ-5,6,7,8, SCRAMBLER	Fig. 9B-1050
XJ 6 CYLINDER ENGINE (V6)	
BLOCK, ENGINE XJ CHEROKEE, XJ WAGONEER, COMANCHE	Fig. 9B-1100
GASKET SET XJ CHEROKEE, XJ WAGONEER COMANCHE	Fig. 9B-1150
CYLINDER HEAD XJ CHEROKEE, XJ WAGONEER, COMANCHE	Fig. 9B-1200
CRANKSHAFT, FLYWHEEL AND PISTON XJ CHEROKEE, XJ WAGONEER, COMANCHE	Fig. 9B-1300
CAMSHAFT AND VALVES XJ CHEROKEE, XJ WAGONEER, COMANCHE	Fig. 9B-1400
TIMING COVER XJ CHEROKEE, XJ WAGONEER COMANCHE	Fig. 9B-1500
ENGINE OILING XJ CHEROKEE, XJ WAGONEER COMANCHE	Fig. 9B-1600
MANIFOLD, INTAKE AND EXHAUST XJ CHEROKEE, XJ WAGONEER COMANCHE	Fig. 9B-1700
ENGINE MOUNTING XJ CHEROKEE, XJ WAGONEER COMANCHE	Fig. 9B-1800
SJ 6 CYLINDER ENGINE	
ENGINE, SIX CYLINDER SJ CHEROKEE, SJ WAGONEER J10	Fig. 9B-1900
ENGINE, SIX CYLINDER SJ CHEROKEE, SJ WAGONEER J10	Fig. 9B-2000
GASKET SET SJ CHEROKEE, SJ WAGONEER J10	Fig. 9B-2100
CYLINDER HEAD SJ CHEROKEE, SJ WAGONEER J10	Fig. 9B-2200
CRANKSHAFT, FLYWHEEL AND PISTON SJ CHEROKEE, SJ WAGONEER J10	Fig. 9B-2300
CAMSHAFT AND VALVES SJ CHEROKEE, SJ WAGONEER J10	Fig. 9B-2400
TIMING COVER SJ CHEROKEE, SJ WAGONEER J10	Fig. 9B-2500
ENGINE OILING SJ CHEROKEE, SJ WAGONEER J10	Fig. 9B-2600
ENGINE OIL FILTER, REMOTE SEVERE USE SJ CHEROKEE, SJ WAGONEER, J10	Fig. 9B-2700
MANIFOLD, INTAKE AND EXHAUST SJ CHEROKEE, SJ WAGONEER, J10	Fig. 9B-2800
ENGINE MOUNTING SJ CHEROKEE, SJ WAGONEER, J10	Fig. 9B-2900

ENGINE SIX CYLINDER CJ-5,6,7,8, SCRAMBLER
Figure 9B-100

81J56 100

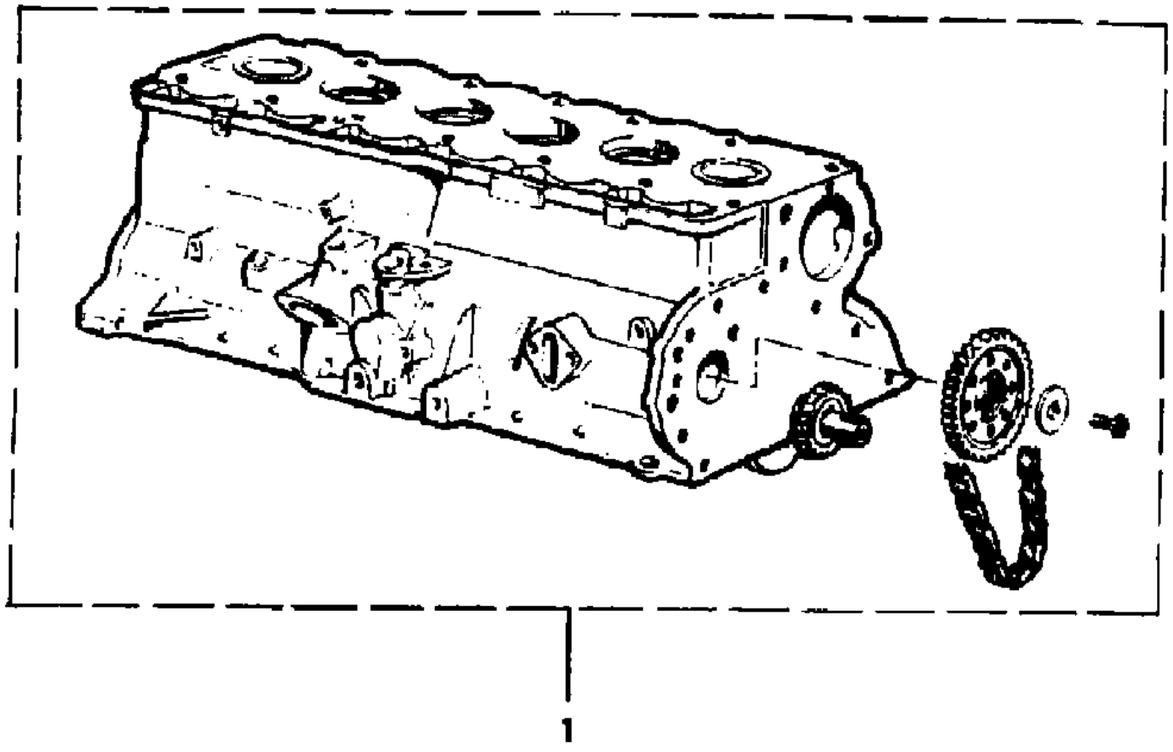

ITEM	PART NUMBER	QTY	BODY	MODEL	DESCRIPTION
1					ENGINE, Short, Without Camshaft
	J813 3000	1			1981
	J813 3835	1			1982
	J813 4599	1			1983-85
	8350 2299	1			1986
	J813 4500	1			1982-85; VAM, Built in Mexico, Engine Build Code "M"

MODEL CODES

16=Cherokee 2 Dr.(1981-83)
17=Cherokee 2 Dr.(1981-83)
73=Cherokee 2WD-2 Dr.(1984-86)
74=Cherokee 2WD-4 Dr.(1984-86)
18=Cherokee 4 Dr.(1981-83)
77=Cherokee 4WD-2 Dr.(1984-86)
78=Cherokee 4WD-4 Dr.(1984-86)
85=CJ-5 (1981-83)
86=CJ-6(1981)
87=CJ-7(1981-86)
88=CJ-8, Scrambler(1981-86)
64=Comanche 2WD-6 Ft. Box(1986)
66=Comanche 2WD-7 Ft. Box(1986)
63=Comanche 4WD-6 Ft. Box(1986)
65=Comanche 4WD-7 Ft. Box(1986)
15=Grand Wagoneer 4 Dr.(1984-86)
25=J-10 Truck 7 Ft. Box(1981-84)
26=J10 Truck 8 Ft. Box(1981-86)
27=J-20 Truck 8 Ft. Box(1981-86)
15=Wagoneer 4 Dr.(1981-83)
75=Wagoneer 4WD-4 Dr.(1984-86)

BODY
CJ=CJ-5, CJ-6, CJ-7, CJ-8, Scrambler(1981-86)
MJ=Comanche Pickup(1986)

STYLES
SJ=Wagoneer(1981-83), Grand Wagoneer(1984-86), Cherokee(1981-83), J-10, J-20(1981-86)
XJ=Wagoneer(1984-86), Cherokee(1984-86)

AR = Use as Required - = Non Illustrated Part P.A.R. = Paint as Required

« RETURN TO GROUP INDEX

BLOCK, ENGINE CJ-5,6,7,8, SCRAMBLER
Figure 9B-200

81J56 200

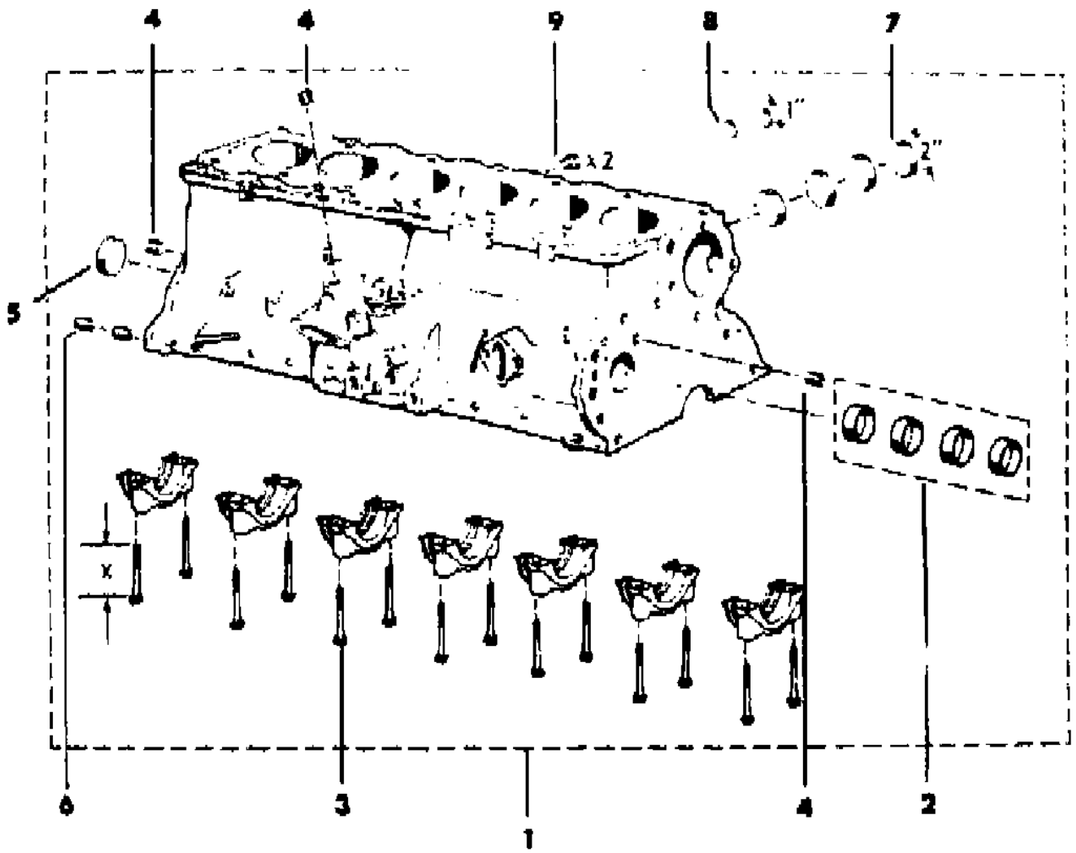

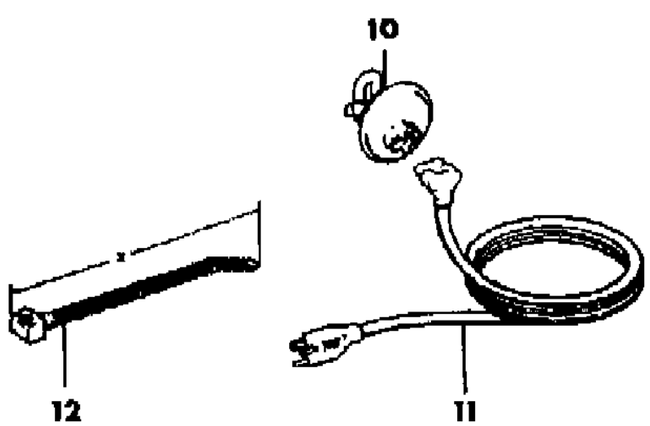

ITEM	PART NUMBER	QTY	BODY	MODEL	DESCRIPTION
1					BLOCK, Engine ***
	J813 3001	1			1981
	J813 3837	1			1982-85
	8350 2298	1			1986
	J813 4501	1			1982-85; VAM, Built in Mexico, Build Code "M"
2					BEARING PACKAGE ***
	J320 5711	1			Standard
	J320 8985	1			+.010"
3					BOLT
	J400 6591	14			2.75"
	J400 6948	14			2.87"
4	J044 4660	3			PLUG
5	J317 2313	1			PLUG
6	J400 5148	2			PIN
7	J310 5394	4			PLUG
8	J317 8449	2			PLUG
9	G103 879	AR			PLUG, Cylinder Block Drain
10	5300 5197	1			HEATER, Engine Block
11	J324 2324	1			CORD, Power Supply
12					STRAP, Tie
	J322 3227	AR			200mm
	J369 3058	AR			300mm
	J323 0270	AR			350mm
	J323 5187	AR			450mm

MODEL CODES

16=Cherokee 2 Dr.(1981-83)
17=Cherokee 2 Dr.(1981-83)
73=Cherokee 2WD-2 Dr.(1984-86)
74=Cherokee 2WD-4 Dr.(1984-86)
18=Cherokee 4 Dr.(1981-83)
77=Cherokee 4WD-2 Dr.(1984-86)
78=Cherokee 4WD-4 Dr.(1984-86)
85=CJ-5 (1981-83)
86=CJ-6(1981)
87=CJ-7(1981-86)
88=CJ-8, Scrambler(1981-86)
64=Comanche 2WD-6 Ft. Box(1986)
66=Comanche 2WD-7 Ft. Box(1986)
63=Comanche 4WD-6 Ft. Box(1986)
65=Comanche 4WD-7 Ft. Box(1986)
15=Grand Wagoneer 4 Dr.(1984-86)
25=J-10 Truck 7 Ft. Box(1981-84)
26=J10 Truck 8 Ft. Box(1981-86)
27=J-20 Truck 8 Ft. Box(1981-86)
15=Wagoneer 4 Dr.(1981-83)
75=Wagoneer 4WD-4 Dr.(1984-86)

BODY
CJ=CJ-5, CJ-6, CJ-7, CJ-8, Scrambler(1981-86)
MJ=Comanche Pickup(1986)

STYLES
SJ=Wagoneer(1981-83), Grand Wagoneer(1984-86), Cherokee(1981-83), J-10, J-20(1981-86)
XJ=Wagoneer(1984-86), Cherokee(1984-86)

AR = Use as Required - = Non Illustrated Part P.A.R. = Paint as Required

« RETURN TO GROUP INDEX

GASKET SET CJ-5,6,7,8, SCRAMBLER
Figure 9B-300

81J56 300

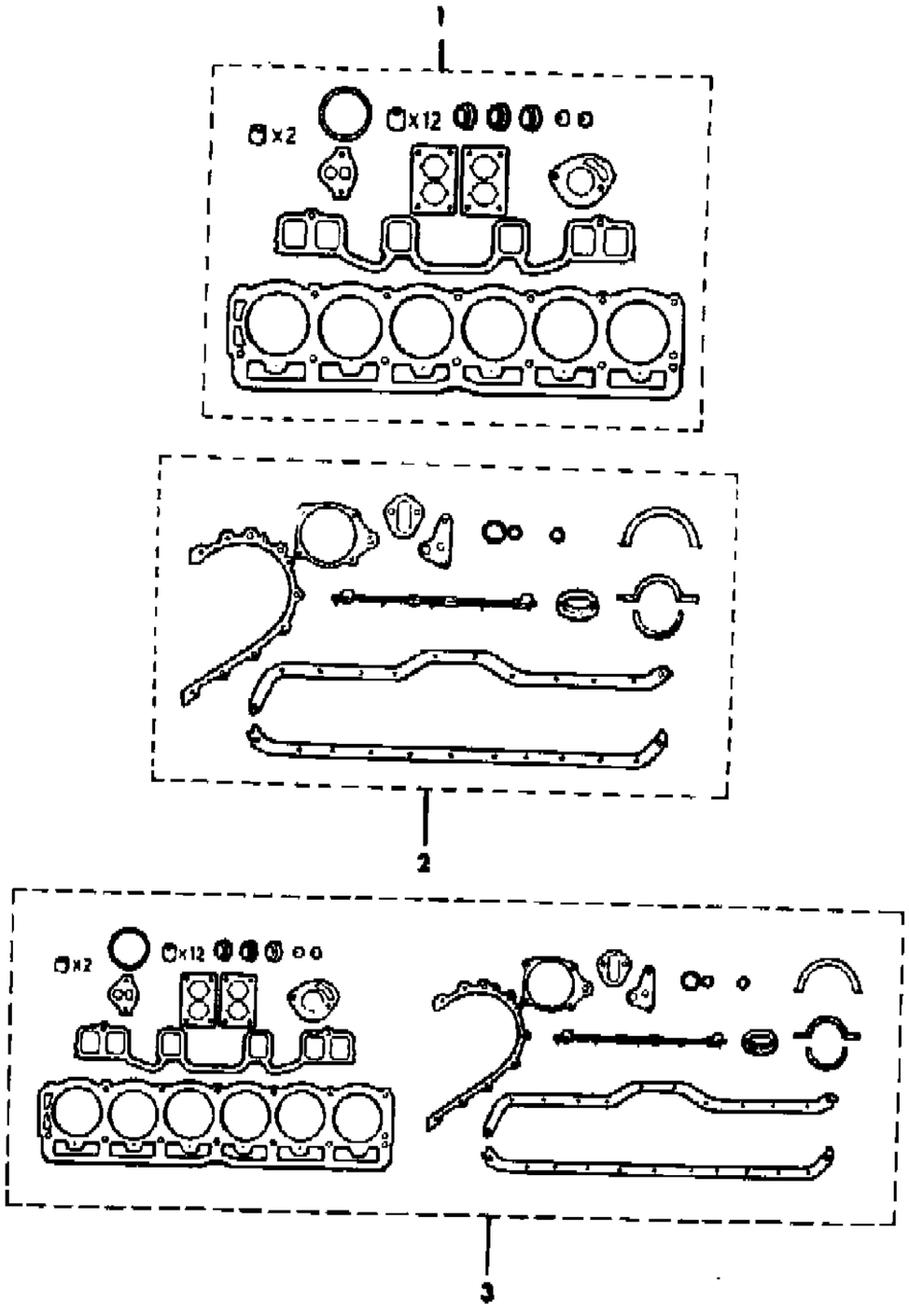

ITEM	PART NUMBER	QTY	BODY	MODEL	DESCRIPTION
1					GASKET PACKAGE, Engine Upper
	J813 3352	1			1981-85
	8350 2384	1			1986
2	J813 3353	1			GASKET PACKAGE, Engine Lower
3	J813 4550	1			GASKET PACKAGE, Engine Overhaul, VAM, Built in Mexico, Engine Build "M"

MODEL CODES

16=Cherokee 2 Dr.(1981-83)
17=Cherokee 2 Dr.(1981-83)
73=Cherokee 2WD-2 Dr.(1984-86)
74=Cherokee 2WD-4 Dr.(1984-86)
18=Cherokee 4 Dr.(1981-83)
77=Cherokee 4WD-2 Dr.(1984-86)
78=Cherokee 4WD-4 Dr.(1984-86)
85=CJ-5 (1981-83)
86=CJ-6(1981)
87=CJ-7(1981-86)
88=CJ-8, Scrambler(1981-86)
64=Comanche 2WD-6 Ft. Box(1986)
66=Comanche 2WD-7 Ft. Box(1986)
63=Comanche 4WD-6 Ft. Box(1986)
65=Comanche 4WD-7 Ft. Box(1986)
15=Grand Wagoneer 4 Dr.(1984-86)
25=J-10 Truck 7 Ft. Box(1981-84)
26=J10 Truck 8 Ft. Box(1981-86)
27=J-20 Truck 8 Ft. Box(1981-86)
15=Wagoneer 4 Dr.(1981-83)
75=Wagoneer 4WD-4 Dr.(1984-86)

BODY
CJ=CJ-5, CJ-6, CJ-7, CJ-8, Scrambler(1981-86)
MJ=Comanche Pickup(1986)

STYLES
SJ=Wagoneer(1981-83), Grand Wagoneer(1984-86), Cherokee(1981-83), J-10, J-20(1981-86)
XJ=Wagoneer(1984-86), Cherokee(1984-86)

AR = Use as Required - = Non Illustrated Part P.A.R. = Paint as Required

« RETURN TO GROUP INDEX

CYLINDER HEAD CJ-5,6,7,8, SCRAMBLER
Figure 9B-400

81J56 400

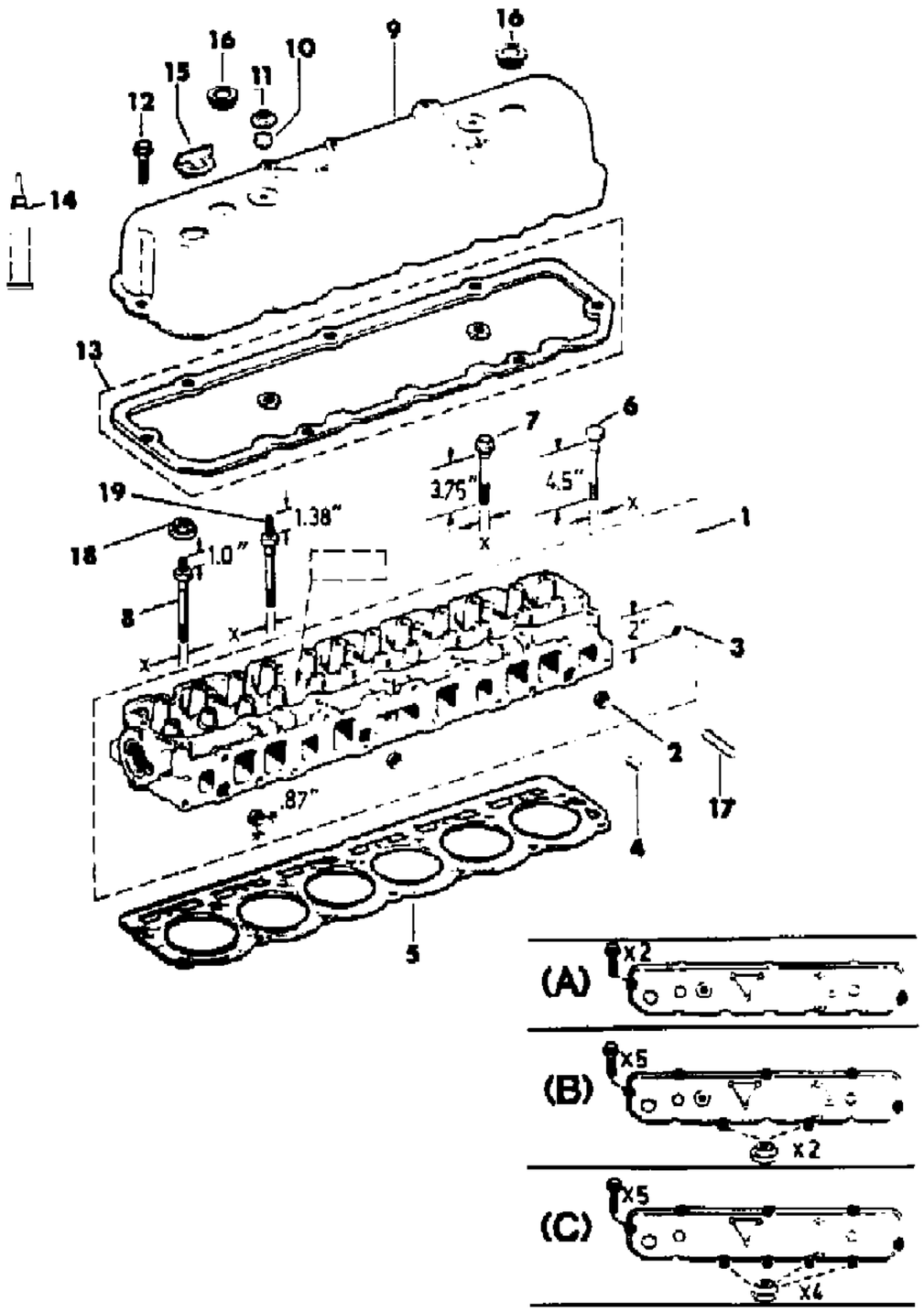

ITEM	PART NUMBER	QTY	BODY	MODEL	DESCRIPTION
1					HEAD, Engine Cylinder
	J813 3010	1			1981
	J813 3892	1			1982
	J813 4764	1			1983-84: A, Coded "591" or "715"
	8350 1395	1			1984-85: B, Coded "591" "715"
	8350 2372	1			1986: Coded "591" or "715"
	J813 4765	1			1983-84: A, EXPORT, Coded "593" or "721"
	8350 1396	1			1984-85: B, EXPORT, Coded "593" or "721"
	8350 2373	1			1986: EXPORT, Coded "593" or "721"
	J813 4505	1			1982-84: A, VAM. Built in Mexico, Engine Build Code "M"
	8350 1899	1			1984: B, VAM, Built in Mexico, Engine Build Code "M"
2	J317 2319	3			PLUG
3	J310 5394	1			PLUG
4	J317 2318	2			PIN
5					GASKET
	J322 8469	1			VAM, Built in Mexico, Engine Build Code "M" ***
6					BOLT
	J400 6592	3			7/16"
	J400 7307	2			1/2"
7					BOLT
	J400 6593	7			7/16"
	J400 7308	7			1/2"
8					BOLT, Stud
	J400 6595	AR			1981-82: 7/16"
	J400 6955	AR			1983-85: 7/16"
	J400 7310	AR			1986: 1/2"
9					COVER, Cylinder Head
	J323 7808	1			A
	3300 2393	1			B
	3300 3691	1			C
10	J323 7837	2			SEAL, A, B
11	J400 6926	2			NUT, A,B
12					BOLT
	S943 2476	2			A
	S943 2476	5			B
	J400 7435	5			C
13	J805 3050	1			GASKET PACKAGE
14	J899 3317	1			SEALER ***
15	3300 1016	1			CAP

MODEL CODES

16=Cherokee 2 Dr.(1981-83)
17=Cherokee 2 Dr.(1981-83)
73=Cherokee 2WD-2 Dr.(1984-86)
74=Cherokee 2WD-4 Dr.(1984-86)
18=Cherokee 4 Dr.(1981-83)
77=Cherokee 4WD-2 Dr.(1984-86)
78=Cherokee 4WD-4 Dr.(1984-86)
85=CJ-5 (1981-83)
86=CJ-6(1981)
87=CJ-7(1981-86)
88=CJ-8, Scrambler(1981-86)
64=Comanche 2WD-6 Ft. Box(1986)
66=Comanche 2WD-7 Ft. Box(1986)
63=Comanche 4WD-6 Ft. Box(1986)
65=Comanche 4WD-7 Ft. Box(1986)
15=Grand Wagoneer 4 Dr.(1984-86)
25=J-10 Truck 7 Ft. Box(1981-84)
26=J10 Truck 8 Ft. Box(1981-86)
27=J-20 Truck 8 Ft. Box(1981-86)
15=Wagoneer 4 Dr.(1981-83)
75=Wagoneer 4WD-4 Dr.(1984-86)

BODY
CJ=CJ-5, CJ-6, CJ-7, CJ-8, Scrambler(1981-86)
MJ=Comanche Pickup(1986)

STYLES
SJ=Wagoneer(1981-83), Grand Wagoneer(1984-86), Cherokee(1981-83), J-10, J-20(1981-86)
XJ=Wagoneer(1984-86), Cherokee(1984-86)

AR = Use as Required - = Non Illustrated Part P.A.R. = Paint as Required

CYLINDER HEAD CJ-5,6,7,8, SCRAMBLER
Figure 9B-400

81J56 400

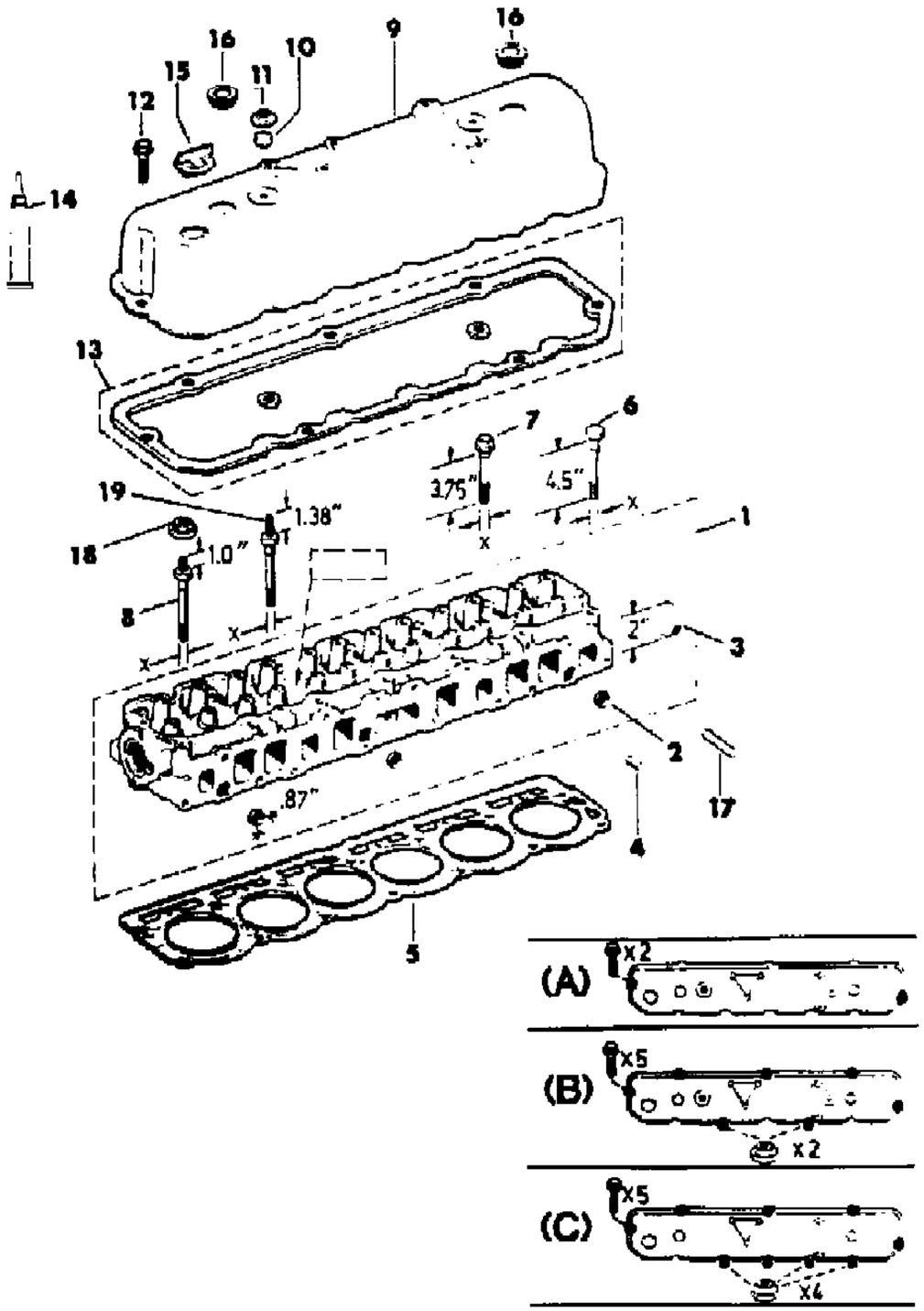

ITEM	PART NUMBER	QTY	BODY	MODEL	DESCRIPTION
16	J323 7765	2			GROMMET
17	J400 3917	2			STUD
18					NUT, Retainer
	J400 7199	2			B
	8350 2989	4			C
19					BOLT, Stud
	J400 7300	AR			1984-85: 7/16"
	J400 7311	AR			1986: 1/2"

MODEL CODES

16=Cherokee 2 Dr.(1981-83)
17=Cherokee 2 Dr.(1981-83)
73=Cherokee 2WD-2 Dr.(1984-86)
74=Cherokee 2WD-4 Dr.(1984-86)
18=Cherokee 4 Dr.(1981-83)
77=Cherokee 4WD-2 Dr.(1984-86)
78=Cherokee 4WD-4 Dr.(1984-86)
85=CJ-5 (1981-83)
86=CJ-6(1981)
87=CJ-7(1981-86)
88=CJ-8, Scrambler(1981-86)
64=Comanche 2WD-6 Ft. Box(1986)
66=Comanche 2WD-7 Ft. Box(1986)
63=Comanche 4WD-6 Ft. Box(1986)
65=Comanche 4WD-7 Ft. Box(1986)
15=Grand Wagoneer 4 Dr.(1984-86)
25=J-10 Truck 7 Ft. Box(1981-84)
26=J10 Truck 8 Ft. Box(1981-86)
27=J-20 Truck 8 Ft. Box(1981-86)
15=Wagoneer 4 Dr.(1981-83)
75=Wagoneer 4WD-4 Dr.(1984-86)

BODY
CJ=CJ-5, CJ-6, CJ-7, CJ-8, Scrambler(1981-86)
MJ=Comanche Pickup(1986)

STYLES
SJ=Wagoneer(1981-83), Grand Wagoneer(1984-86), Cherokee(1981-83), J-10, J-20(1981-86)
XJ=Wagoneer(1984-86), Cherokee(1984-86)

AR = Use as Required - = Non Illustrated Part P.A.R. = Paint as Required

« RETURN TO GROUP INDEX

CRANKSHAFT, FLYWHEEL AND PISTON CJ-5,6,7,8, SCRAMBLER
Figure 9B-500

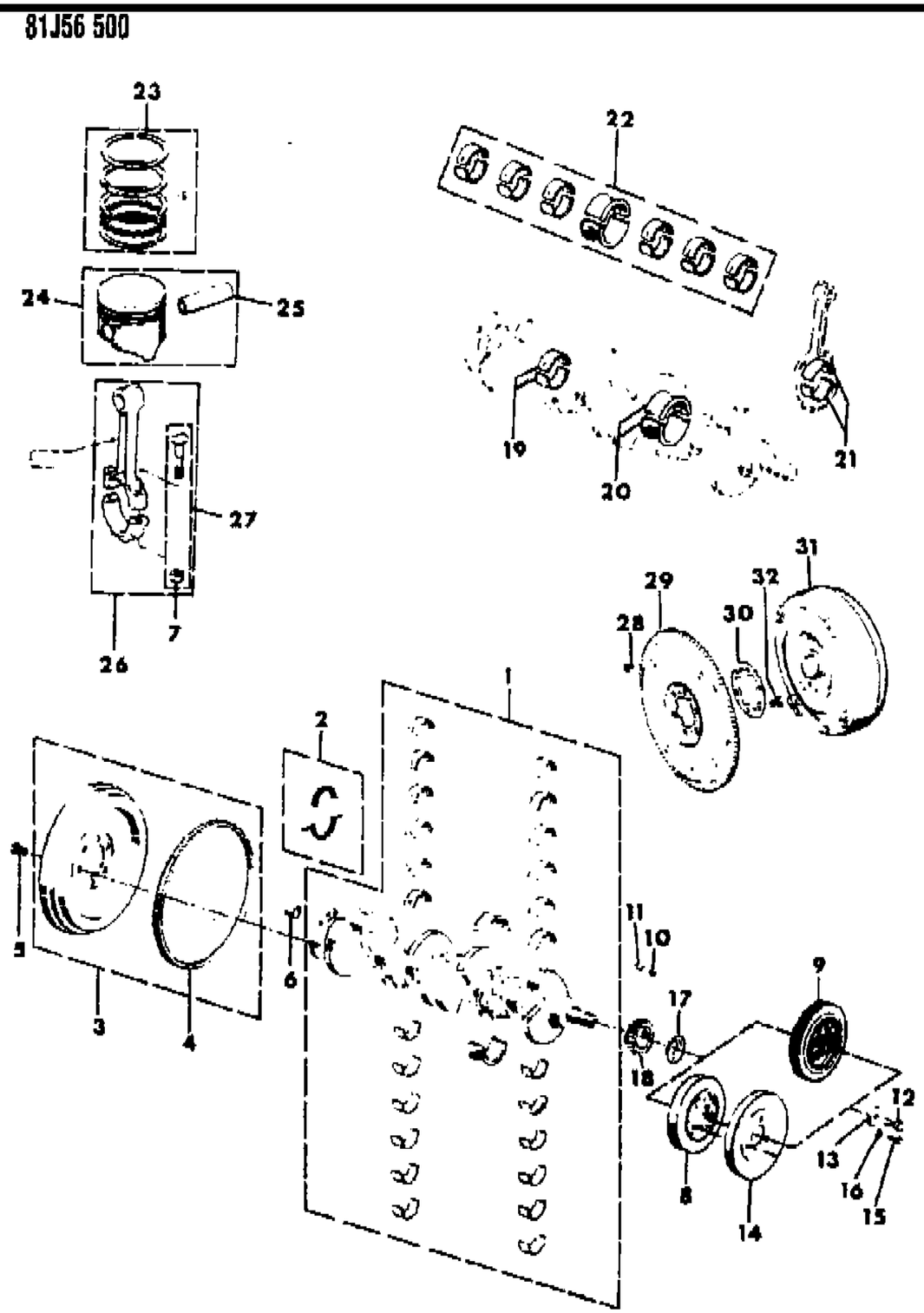

ITEM	PART NUMBER	QTY	BODY	MODEL	DESCRIPTION
1	J813 3008	1			CRANKSHAFT PACKAGE ***
2	J320 5331	1			SEAL PACKAGE
3					FLYWHEEL, With Manual Transmission ***
	J323 8635	1			1981
	J324 0094	1			1982-86
4	J317 9741	1			GEAR, Ring, With Manual Transmission
5	J317 0524	6			BOLT, With Manual Transmission
6	J323 6726	1			BUSHING, Pilot, With Manual Transmission
7					NUT
	J314 9556	12			Coded "707"
	J400 6385	12			Coded "352"
8					DAMPER
	J323 7196	1			Without Serpentine Belt Drive
	J322 5201	1			VAM, Built in Mexico, Engine Built Code "M"
9	J323 7723	1			DAMPER, With Serpentine Belt Drive
10	J310 7234	1			KEY, Shaft
11	J310 7002	2			KEY, Shaft
12	J018 1429	1			BOLT
13	J812 7255	1			WASHER
14					PULLEY, Crankshaft, Without Serpentine Belt Drive
	J322 4690	1			Without Factory Installed Air Conditioning
	J323 0384	1			With Factory Installed Air Conditioning
	J813 3876	1			With Dealer Installed American Air Conditioning
15	S017 9814	3			BOLT, Without Serpentine Belt Drive
16	J012 0214	3			WASHER, Without Serpentine Belt Drive
17	J317 3076	1			SLINGER, Oil ***
18	J317 3205	1			SPROCKET, Crankshaft
19					BEARING PACKAGE ***
	J813 3252	6			Standard
	J813 3680	6			-.001"
	J813 3682	6			-.002"
	J813 3254	6			-.010"
	J813 3684	6			-.012"
20					BEARING PACKAGE ***
	J813 3253	1			Standard
	J813 3681	1			-.001"
	J813 3683	1			-.002"
	J813 3255	1			-.010"
	J813 3685	1			-.012"

MODEL CODES

16=Cherokee 2 Dr.(1981-83)
17=Cherokee 2 Dr.(1981-83)
73=Cherokee 2WD-2 Dr.(1984-86)
74=Cherokee 2WD-4 Dr.(1984-86)
18=Cherokee 4 Dr.(1981-83)
77=Cherokee 4WD-2 Dr.(1984-86)
78=Cherokee 4WD-4 Dr.(1984-86)
85=CJ-5 (1981-83)
86=CJ-6(1981)
87=CJ-7(1981-86)
88=CJ-8, Scrambler(1981-86)
64=Comanche 2WD-6 Ft. Box(1986)
66=Comanche 2WD-7 Ft. Box(1986)
63=Comanche 4WD-6 Ft. Box(1986)
65=Comanche 4WD-7 Ft. Box(1986)
15=Grand Wagoneer 4 Dr.(1984-86)
25=J-10 Truck 7 Ft. Box(1981-84)
26=J10 Truck 8 Ft. Box(1981-86)
27=J-20 Truck 8 Ft. Box(1981-86)
15=Wagoneer 4 Dr.(1981-83)
75=Wagoneer 4WD-4 Dr.(1984-86)

BODY
CJ=CJ-5, CJ-6, CJ-7, CJ-8, Scrambler(1981-86)
MJ=Comanche Pickup(1986)

STYLES
SJ=Wagoneer(1981-83), Grand Wagoneer(1984-86), Cherokee(1981-83), J-10, J-20(1981-86)
XJ=Wagoneer(1984-86), Cherokee(1984-86)

AR = Use as Required - = Non Illustrated Part P.A.R. = Paint as Required

« RETURN TO GROUP INDEX »

CRANKSHAFT, FLYWHEEL AND PISTON CJ-5,6,7,8, SCRAMBLER
Figure 9B-500

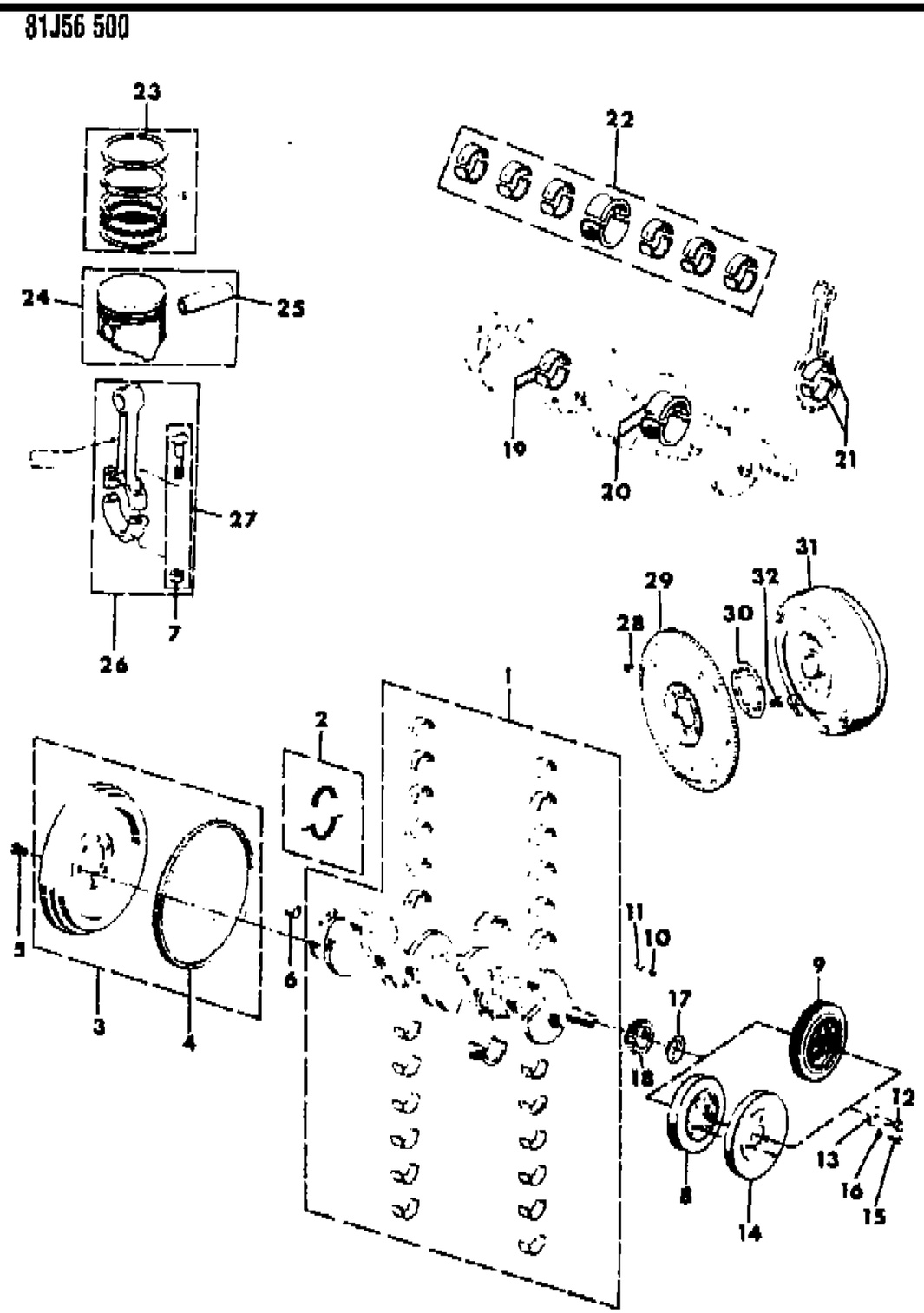

ITEM	PART NUMBER	QTY	BODY	MODEL	DESCRIPTION
21					BEARING PACKAGE ***
	J812 6204	6			Standard
	J812 6205	6			-.001"
	J812 6206	6			-.002"
	J812 6207	6			-.010"
	J812 6208	6			-.012"
					BEARING PACKAGE, VAM, Built in Mexico, Engine Build Code "M" ***
	J813 4523	6			Standard
	J813 4524	6			-.020"
	J813 4525	6			-.030"
	J813 4526	6			-.040"
22					BEARING PACKAGE, Main, VAM, Built in Mexico, Engine Build Code "M" ***
	J813 4518	1			Standard
	J813 4519	1			-.010"
	J813 4520	1			-.020"
	J813 4521	1			-.030"
	J813 4522	1			.040"
23					RING PACKAGE, Piston ***
	J812 1683	1			Standard
	J812 1684	1			+.010"
					RING PACKAGE, Piston, VAM, Built in Mexico, Engine Build Code "M" ***
	J813 4531	1			Standard
	8350 0429	1			+.010"
	J813 4532	1			+.020"
	J813 4533	1			+.030"
	J813 4534	1			+.040"
24					PISTON PACKAGE ***
	4762 940	6			Size 'B'
	4762 942	6			Size 'C'
	4762 943	6			Size 'D'
	J813 4442	6			+.010" O/Size
					PISTON PACKAGE, VAM, Built in Mexico, Engine Build Code "M" ***
	J813 4527	6			Standard
	8350 0419	6			+.010"
	J813 4528	6			+.020"

MODEL CODES

16=Cherokee 2 Dr.(1981-83)	78=Cherokee 4WD-4 Dr.(1984-86)	64=Comanche 2WD-6 Ft. Box(1986)	25=J-10 Truck 7 Ft. Box(1981-84)
17=Cherokee 2 Dr.(1981-83)	85=CJ-5 (1981-83)	66=Comanche 2WD-7 Ft. Box(1986)	26=J10 Truck 8 Ft. Box(1981-86)
73=Cherokee 2WD-2 Dr.(1984-86)	86=CJ-6(1981)	63=Comanche 4WD-6 Ft. Box(1986)	27=J-20 Truck 8 Ft. Box(1981-86)
74=Cherokee 2WD-4 Dr.(1984-86)	87=CJ-7(1981-86)	65=Comanche 4WD-7 Ft. Box(1986)	15=Wagoneer 4 Dr.(1981-83)
18=Cherokee 4 Dr.(1981-83)	88=CJ-8, Scrambler(1981-86)	15=Grand Wagoneer 4 Dr.(1984-86)	75=Wagoneer 4WD-4 Dr.(1984-86)
77=Cherokee 4WD-2 Dr.(1984-86)			

BODY
CJ=CJ-5, CJ-6, CJ-7, CJ-8, Scrambler(1981-86)
MJ=Comanche Pickup(1986)

STYLES
SJ=Wagoneer(1981-83), Grand Wagoneer(1984-86), Cherokee(1981-83), J-10, J-20(1981-86)
XJ=Wagoneer(1984-86), Cherokee(1984-86)

AR = Use as Required - = Non Illustrated Part P.A.R. = Paint as Required

CRANKSHAFT, FLYWHEEL AND PISTON CJ-5,6,7,8, SCRAMBLER
Figure 9B-500

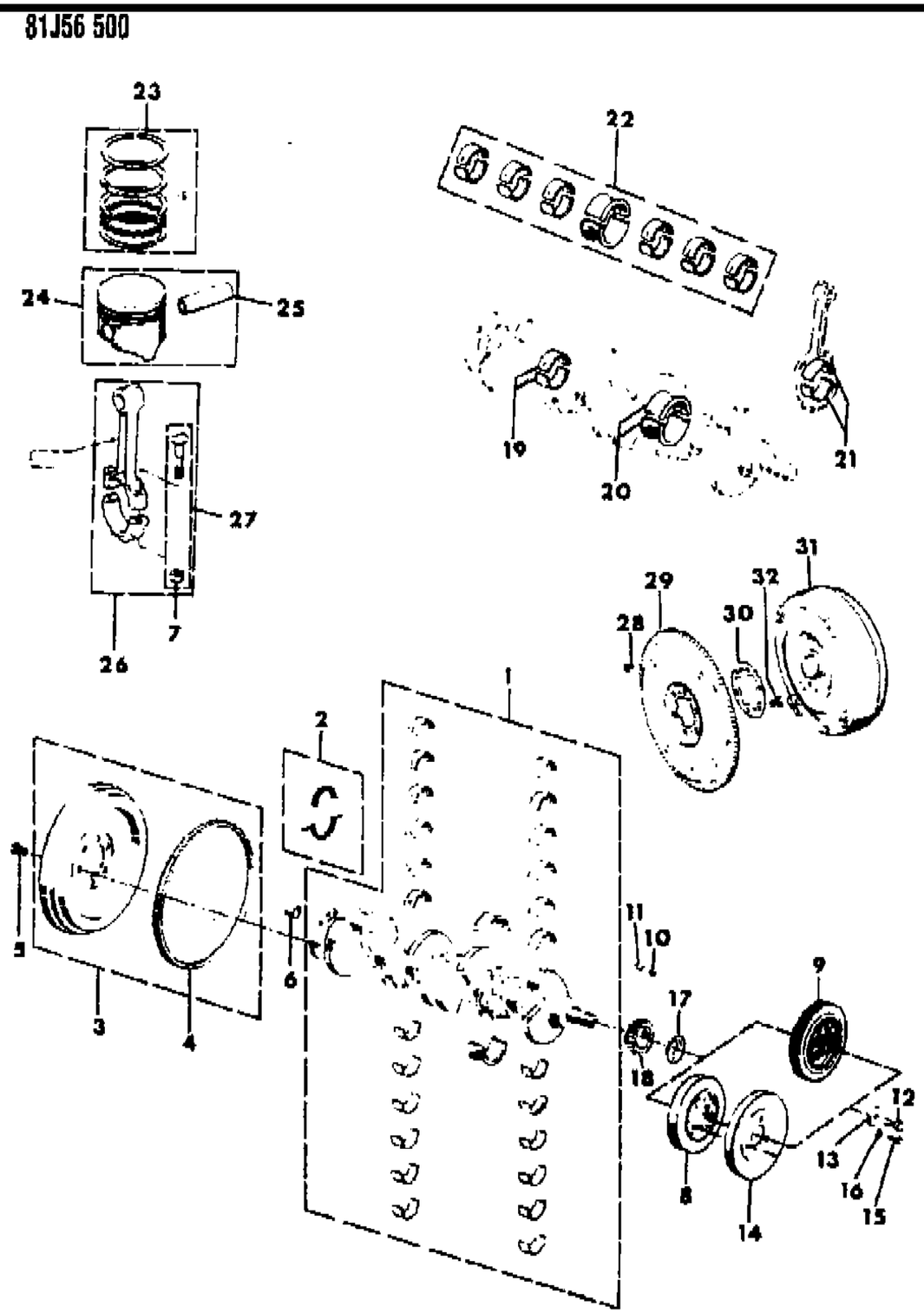

ITEM	PART NUMBER	QTY	BODY	MODEL	DESCRIPTION
	J813 4529	6			+.030"
	J813 4530	6			+.040"
25					PIN, Piston
	J318 0483	6			Standard
	8350 0303	6			+.003"
	8350 0304	6			+.005"
					PIN, Piston, VAM, Built in Mexico, Engine Build Code "M"
	J813 4535	6			Standard
	J813 4536	6			+.003"
	J813 4537	6			+.005"
26					ROD CONNECTING ***
	J318 0444	6			Coded "707"
	J323 7812	6			Coded "352"
					ROD, Connecting, VAM, Built in Mexico, Engine Build Code "M"
	J813 4504	6			Coded "2009093"
	8350 1842	6			Coded "2027490"
27					BOLT PACKAGE ***
	J448 6626	12			Coded "707"
	J813 3824	12			Coded "352"
28	J321 4097	4			BOLT
29	J323 2138	1			PLATE
30	J321 4094	1			PLATE
31					CONVERTER, Transmission
					For Transmission Coded "3238773" or "3240231" or "33000913"
	J813 2569	1			EXPORT
	JR77 5035	1			Remanufactured
					For Transmission Coded "3240219" or 3241098" or "33000917"
	J813 2570	1			EXPORT
	JR77 5033	1			Remanufactured
32	J315 1407	AR			BOLT

MODEL CODES

16=Cherokee 2 Dr.(1981-83)	78=Cherokee 4WD-4 Dr.(1984-86)	64=Comanche 2WD-6 Ft. Box(1986)	25=J-10 Truck 7 Ft. Box(1981-84)
17=Cherokee 2 Dr.(1981-83)	85=CJ-5 (1981-83)	66=Comanche 2WD-7 Ft. Box(1986)	26=J10 Truck 8 Ft. Box(1981-86)
73=Cherokee 2WD-2 Dr.(1984-86)	86=CJ-6(1981)	63=Comanche 4WD-6 Ft. Box(1986)	27=J-20 Truck 8 Ft. Box(1981-86)
74=Cherokee 2WD-4 Dr.(1984-86)	87=CJ-7(1981-86)	65=Comanche 4WD-7 Ft. Box(1986)	15=Wagoneer 4 Dr.(1981-83)
18=Cherokee 4 Dr.(1981-83)	88=CJ-8, Scrambler(1981-86)	15=Grand Wagoneer 4 Dr.(1984-86)	75=Wagoneer 4WD-4 Dr.(1984-86)
77=Cherokee 4WD-2 Dr.(1984-86)			

BODY
CJ=CJ-5, CJ-6, CJ-7, CJ-8, Scrambler(1981-86)
MJ=Comanche Pickup(1986)

STYLES
SJ=Wagoneer(1981-83), Grand Wagoneer(1984-86), Cherokee(1981-83), J-10, J-20(1981-86)
XJ=Wagoneer(1984-86), Cherokee(1984-86)

AR = Use as Required - = Non Illustrated Part P.A.R. = Paint as Required

« RETURN TO GROUP INDEX

CAMSHAFT AND VALVES CJ-5,6,7,8, SCRAMBLER
Figure 9B-600

81J56 600

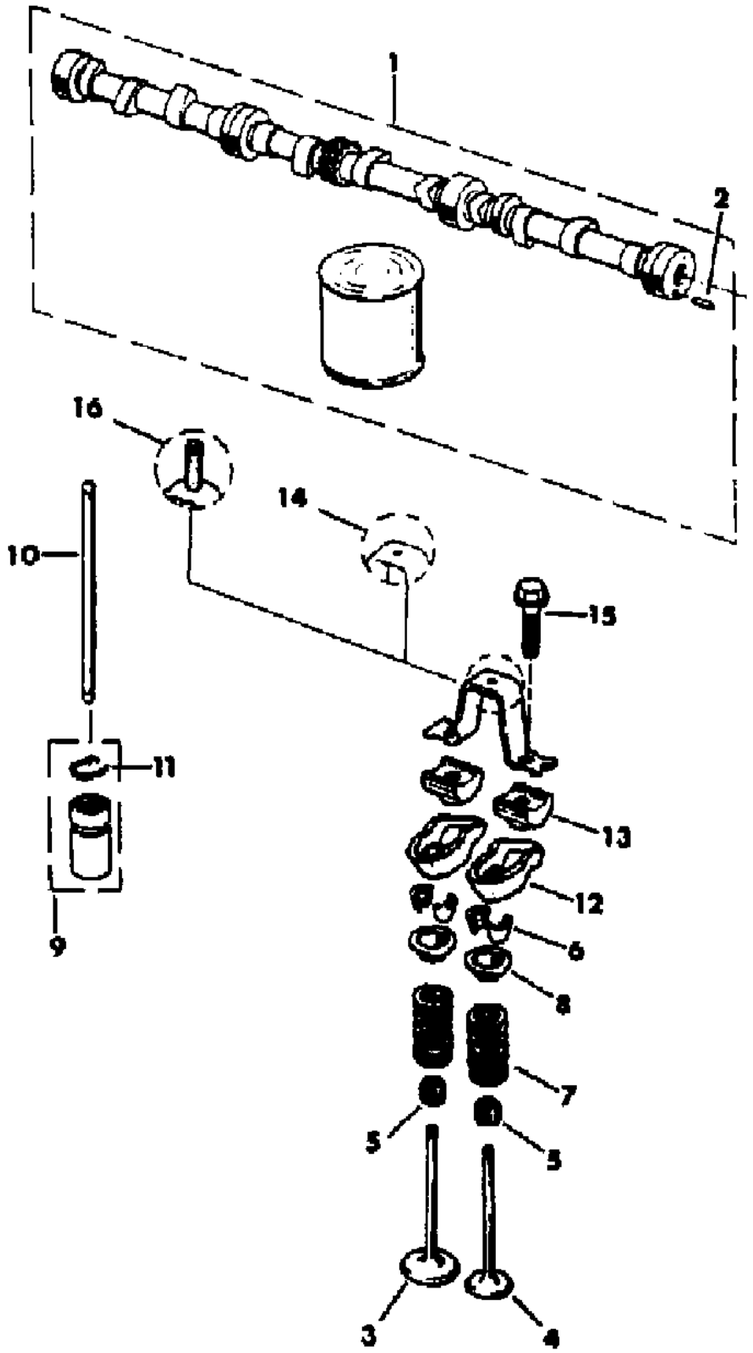

ITEM	PART NUMBER	QTY	BODY	MODEL	DESCRIPTION
1					CAMSHAFT
	J813 3009	1			Without VAM
	J813 4502	1			VAM, Built in Mexico, Engine Build Code "M"
2	J045 6384	1			PIN
3					VALVE, Intake
	J323 7465	6			Standard
	J324 0166	6			+.003"
	J324 0167	6			+.015"
					VALVE, Intake, VAM, Built in Mexico, Engine Buile Code "M"
	J813 4507	6			Standard
	8350 0416	6			+.015"
4					VALVE, Exhaust
	J323 7464	6			Standard
	J324 0163	6			+.003"
	J324 0164	6			+.015"
					VALVE, Exhaust, VAM, Built in Mexico, Engine Build Code "M"
	J813 4506	6			Standard
	8350 0417	6			+.003"
	8350 0418	6			+.015"
5					DEFLECTOR ***
	J321 8976	12			Standard
	J321 8976	12			+.003"
	J321 8977	12			+.015"
	J321 8978	12			+.030"
	J320 5878	12			DEFLECTOR, Perfect Circle ***
	J320 5737	12			DEFLECTOR, Skinner ***
	J812 5844	12			DEFLECTOR, Skinner ***
6					KEEPER ***
	J318 0458	24			Without VAM
	J315 6157	24			VAM, Built in Mexico, Engine Build Code "M"
7					SPRING
	J322 8192	12			Without VAM
	J813 4508	12			VAM, Built in MEXICO, Engine Build Code "M"
8	J323 1483	12			RETAINER
9					TAPPET
	J322 2276	12			Without VAM
	J813 4510	12			VAM, Built in MEXICO, Engine Build Code "M"
10					PUSHROD ***
	J324 2395	12			Without VAM

MODEL CODES
16=Cherokee 2 Dr.(1981-83)
17=Cherokee 2 Dr.(1981-83)
73=Cherokee 2WD-2 Dr.(1984-86)
74=Cherokee 2WD-4 Dr.(1984-86)
18=Cherokee 4 Dr.(1981-83)
77=Cherokee 4WD-2 Dr.(1984-86)
78=Cherokee 4WD-4 Dr.(1984-86)
85=CJ-5 (1981-83)
86=CJ-6(1981)
87=CJ-7(1981-86)
88=CJ-8, Scrambler(1981-86)
64=Comanche 2WD-6 Ft. Box(1986)
66=Comanche 2WD-7 Ft. Box(1986)
63=Comanche 4WD-6 Ft. Box(1986)
65=Comanche 4WD-7 Ft. Box(1986)
15=Grand Wagoneer 4 Dr.(1984-86)
25=J-10 Truck 7 Ft. Box(1981-84)
26=J10 Truck 8 Ft. Box(1981-86)
27=J-20 Truck 8 Ft. Box(1981-86)
15=Wagoneer 4 Dr.(1981-83)
75=Wagoneer 4WD-4 Dr.(1984-86)

BODY
CJ=CJ-5, CJ-6, CJ-7, CJ-8, Scrambler(1981-86)
MJ=Comanche Pickup(1986)

STYLES
SJ=Wagoneer(1981-83), Grand Wagoneer(1984-86), Cherokee(1981-83), J-10, J-20(1981-86)
XJ=Wagoneer(1984-86), Cherokee(1984-86)

AR = Use as Required - = Non Illustrated Part P.A.R. = Paint as Required

CAMSHAFT AND VALVES CJ-5,6,7,8, SCRAMBLER
Figure 9B-600

81J56 600

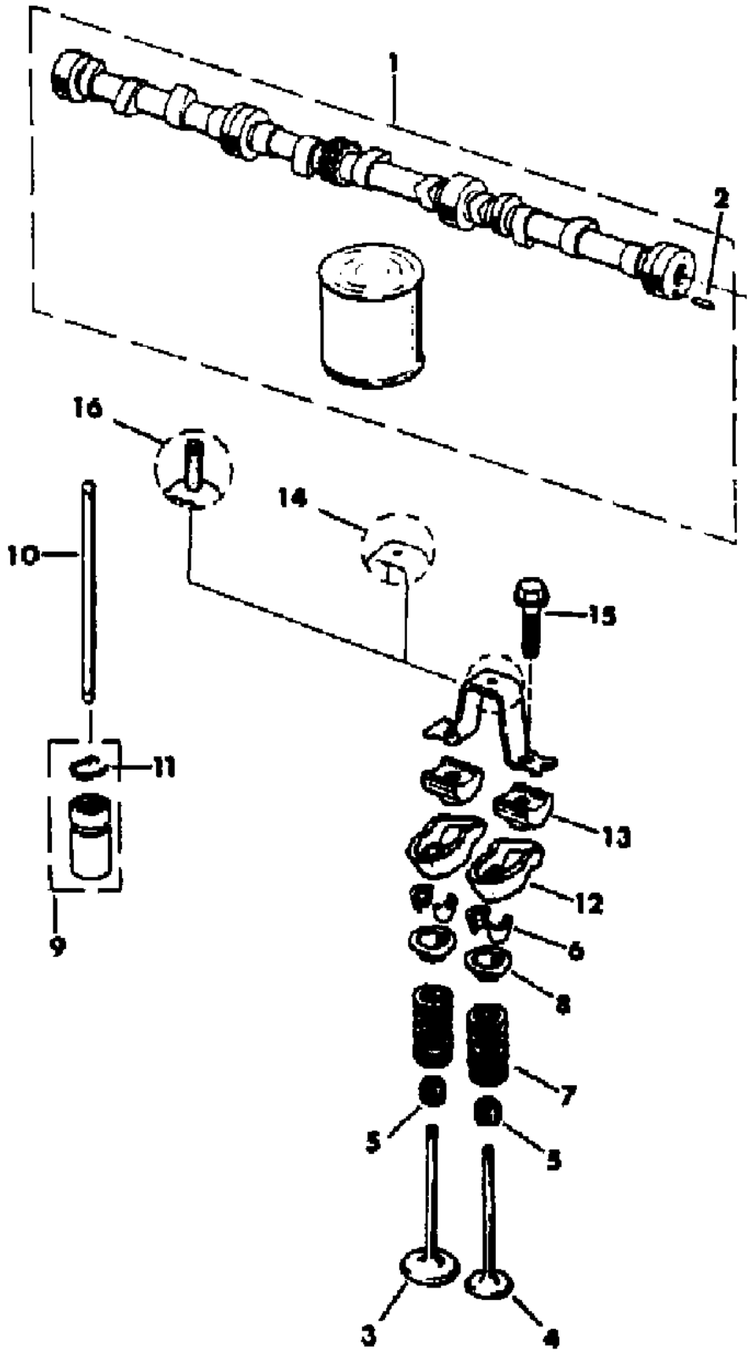

ITEM	PART NUMBER	QTY	BODY	MODEL	DESCRIPTION
	J813 4539	12			VAM, Built in Mexico, Engine Build Code "M", length 9.659"-9. 679"
	8350 0671	12			VAM, Built in Mexico, Engine Built Code "M", length 9.690"-9. 710"
11	J644 0614	12			RING
12					ARM, Rocker
	J322 3888	12			1981-82
	J324 2393	12			1983-86
	J323 3888	12			VAM, Built in Mexico, Engine Build Code "M", length 9.659"-9. 679"
	J324 2393	12			VAM, Built in Mexico, Engine Build Code "M", Length 9.690"-9. 710"
13	J323 5090	12			PIVOT
14					BRIDGE ***
	J323 6513	AR			
	8350 0672	AR			VAM, Built in Mexico, Engine Build Code "M"
15	J812 0512	12			BOLT
16					BRIDGE ***
	J323 7851	AR			Without VAM
	8350 0673	AR			VAM, Built in Mexico, Engine Build Code "M"

MODEL CODES

16=Cherokee 2 Dr.(1981-83)
17=Cherokee 2 Dr.(1981-83)
73=Cherokee 2WD-2 Dr.(1984-86)
74=Cherokee 2WD-4 Dr.(1984-86)
18=Cherokee 4 Dr.(1981-83)
77=Cherokee 4WD-2 Dr.(1984-86)
78=Cherokee 4WD-4 Dr.(1984-86)
85=CJ-5 (1981-83)
86=CJ-6(1981)
87=CJ-7(1981-86)
88=CJ-8, Scrambler(1981-86)
64=Comanche 2WD-6 Ft. Box(1986)
66=Comanche 2WD-7 Ft. Box(1986)
63=Comanche 4WD-6 Ft. Box(1986)
65=Comanche 4WD-7 Ft. Box(1986)
15=Grand Wagoneer 4 Dr.(1984-86)
25=J-10 Truck 7 Ft. Box(1981-84)
26=J10 Truck 8 Ft. Box(1981-86)
27=J-20 Truck 8 Ft. Box(1981-86)
15=Wagoneer 4 Dr.(1981-83)
75=Wagoneer 4WD-4 Dr.(1984-86)

BODY
CJ=CJ-5, CJ-6, CJ-7, CJ-8, Scrambler(1981-86)
MJ=Comanche Pickup(1986)

STYLES
SJ=Wagoneer(1981-83), Grand Wagoneer(1984-86), Cherokee(1981-83), J-10, J-20(1981-86)
XJ=Wagoneer(1984-86), Cherokee(1984-86)

AR = Use as Required - = Non Illustrated Part P.A.R. = Paint as Required

« RETURN TO GROUP INDEX

TIMING COVER CJ-5,6,7,8, SCRAMBLER
Figure 9B-700

81J56 700

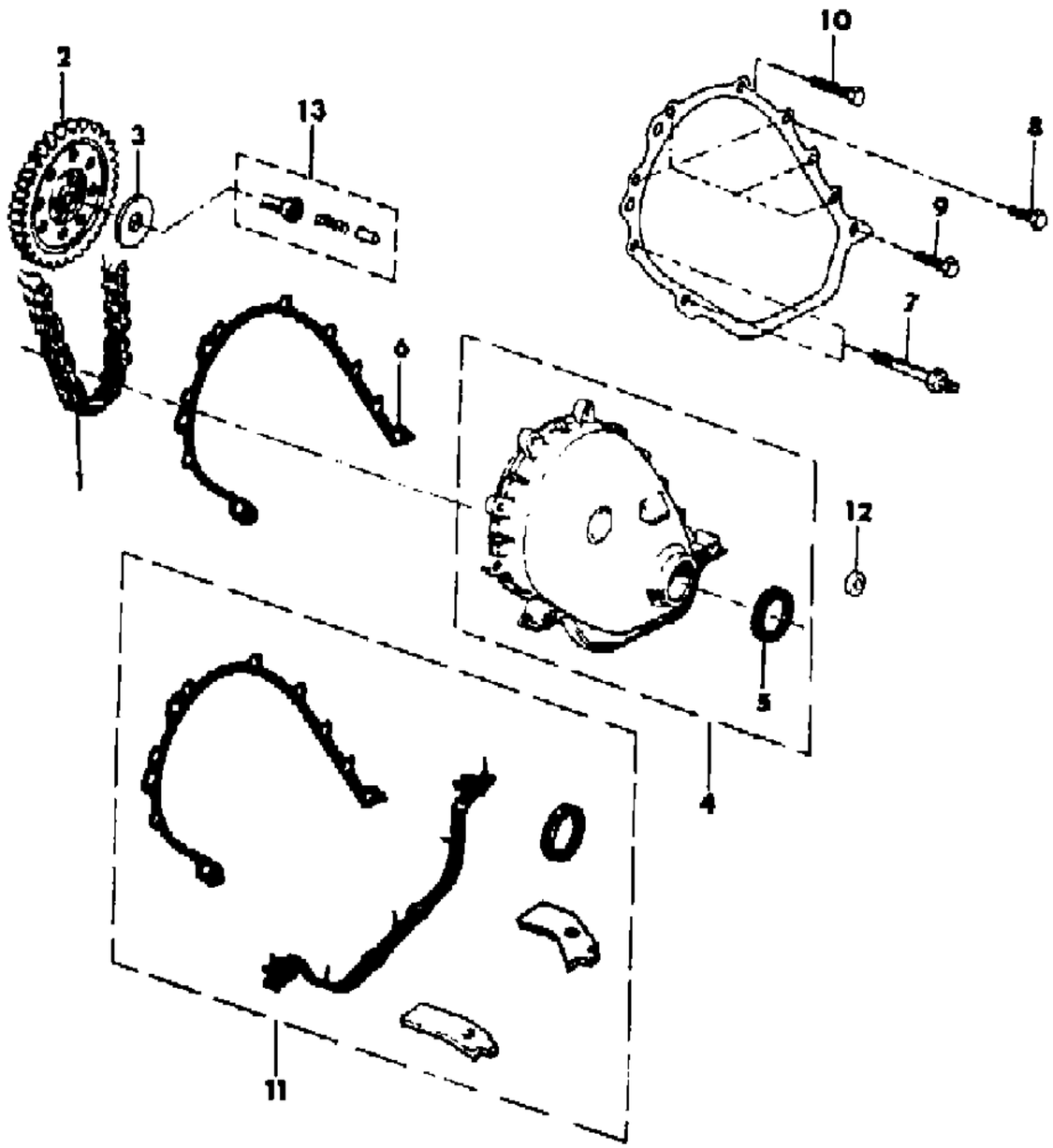

ITEM	PART NUMBER	QTY	BODY	MODEL	DESCRIPTION
1	J317 2307	1			CHAIN, Timing
2	J320 6693	1			SPROCKET, Camshaft
3	J317 3284	1			WASHER
4	J322 5186	1			COVER, Timing Case
5	3300 4681	1			SEAL
6	J322 5187	1			GASKET
7	J400 6973	AR			BOLT, Stud
8	J400 6906	5			BOLT
9	6034 914	1			BOLT
10	J400 6950	AR			BOLT
11	J812 9097	1			GASKET PACKAGE
12					WASHER
	J012 0380	AR			1/4"
	J400 3803	AR			3/8"
	J012 0214	AR			5/16"
13	8350 2890	1			PIN KIT ***

MODEL CODES

16=Cherokee 2 Dr.(1981-83)
17=Cherokee 2 Dr.(1981-83)
73=Cherokee 2WD-2 Dr.(1984-86)
74=Cherokee 2WD-4 Dr.(1984-86)
18=Cherokee 4 Dr.(1981-83)
77=Cherokee 4WD-2 Dr.(1984-86)
78=Cherokee 4WD-4 Dr.(1984-86)
85=CJ-5 (1981-83)
86=CJ-6(1981)
87=CJ-7(1981-86)
88=CJ-8, Scrambler(1981-86)
64=Comanche 2WD-6 Ft. Box(1986)
66=Comanche 2WD-7 Ft. Box(1986)
63=Comanche 4WD-6 Ft. Box(1986)
65=Comanche 4WD-7 Ft. Box(1986)
15=Grand Wagoneer 4 Dr.(1984-86)
25=J-10 Truck 7 Ft. Box(1981-84)
26=J10 Truck 8 Ft. Box(1981-86)
27=J-20 Truck 8 Ft. Box(1981-86)
15=Wagoneer 4 Dr.(1981-83)
75=Wagoneer 4WD-4 Dr.(1984-86)

BODY
CJ=CJ-5, CJ-6, CJ-7, CJ-8, Scrambler(1981-86)
MJ=Comanche Pickup(1986)

STYLES
SJ=Wagoneer(1981-83), Grand Wagoneer(1984-86), Cherokee(1981-83), J-10, J-20(1981-86)
XJ=Wagoneer(1984-86), Cherokee(1984-86)

AR = Use as Required - = Non Illustrated Part P.A.R. = Paint as Required

« RETURN TO GROUP INDEX

ENGINE OILING CJ-5,6,7,8, SCRAMBLER
Figure 9B-800

81J56 800

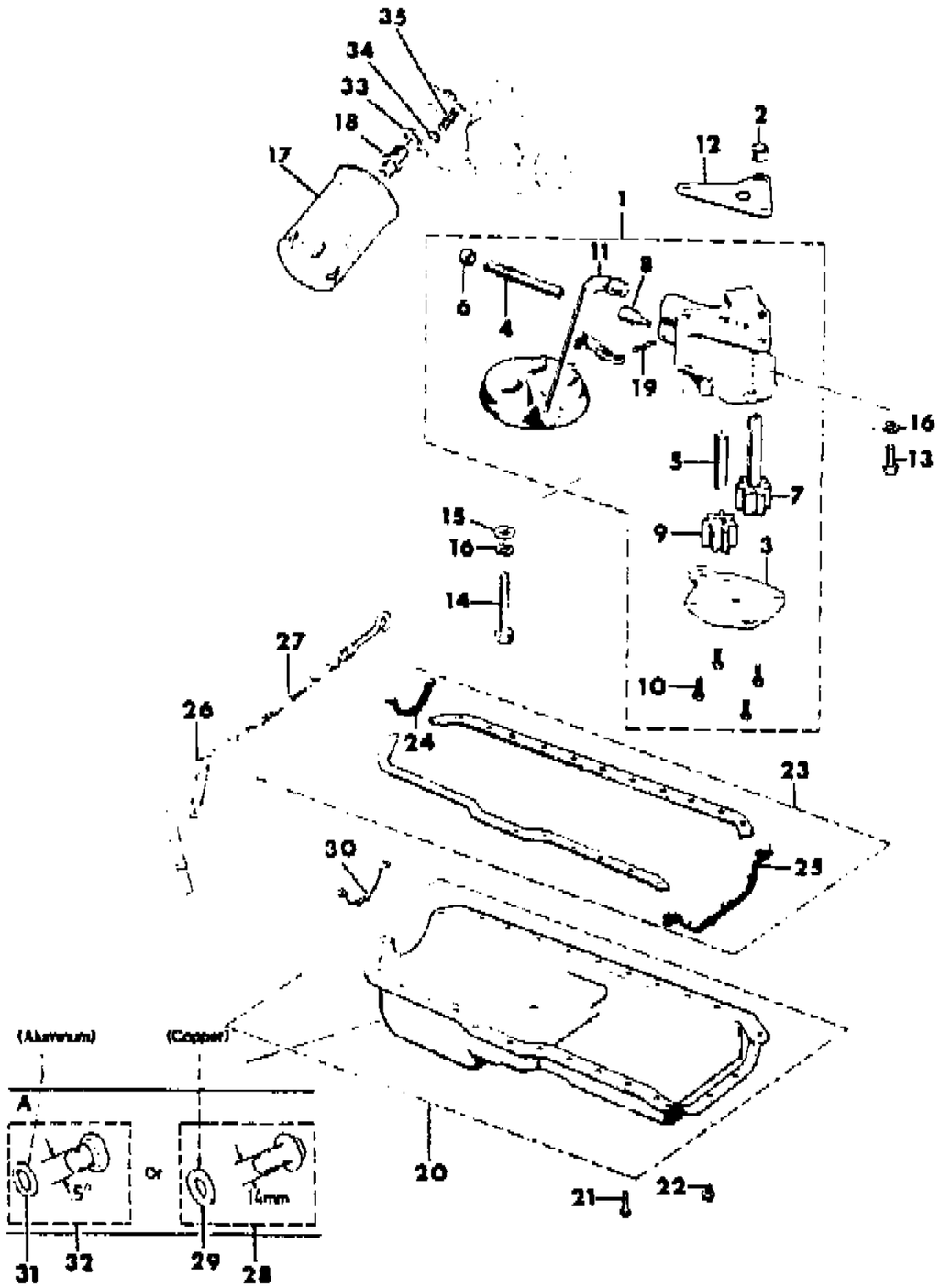

ITEM	PART NUMBER	QTY	BODY	MODEL	DESCRIPTION
1					PUMP, Engine Oil
	J324 2141	1			Cover has Four Mounting Holes and a Tab With a Slotted Hole
	J323 8637	1			Cover has Four Mounting Holes and No Tab
2	J400 5149	1			PIN
3					COVER, Oil Pump
	J324 1733	1			Cover has Four Mounting holes and a Tab with a Slotted Hole
	J321 6612	1			Cover has Four Mounting Holes and No Tab
4	J323 9668	1			SPRING
5	J317 1956	1			SHAFT, Oil Pump Gear
6	J317 1958	1			RETAINER
7	J317 2334	1			GEAR, Oil Pump Drive
8					PLUNGER
	J318 8661	1			Standard
	J324 1676	1			+.010"
9	J319 6843	1			GEAR, Oil Pump Driven
10	J812 2990	4			SCREW
11	J324 2144	1			TUBE, Oil Pump Inlet
12	J317 2332	1			GASKET
13	S942 7934	1			BOLT
14	J943 7670	1			BOLT
15	J012 0393	1			WASHER
16	J012 0214	2			WASHER, Lock
17	J324 2397	1			FILTER, Engine Oil
18	J317 3226	1			CONNECTOR
19	S010 8635	1			PIN, Cotter
20					PAN, Engine Oil
	J323 6547	1			1981-84
	J324 3152	1			1985-86
21	J400 6296	24			SCREW
22	J400 6297	4			SCREW
23	8350 4662	1			GASKET PACKAGE
24	3300 4733	1			SEAL
25	8350 4654	1			SEAL
26					TUBE, Engine Oil Indicator
	J317 6846	1			1981-82
	J324 2449	1			1983-86
27					INDICATOR, Engine Oil Level
	J323 7515	1			1981-82
	J324 2441	1			1983-86

MODEL CODES

16=Cherokee 2 Dr.(1981-83)
17=Cherokee 2 Dr.(1981-83)
73=Cherokee 2WD-2 Dr.(1984-86)
74=Cherokee 2WD-4 Dr.(1984-86)
18=Cherokee 4 Dr.(1981-83)
77=Cherokee 4WD-2 Dr.(1984-86)
78=Cherokee 4WD-4 Dr.(1984-86)
85=CJ-5 (1981-83)
86=CJ-6(1981)
87=CJ-7(1981-86)
88=CJ-8, Scrambler(1981-86)
64=Comanche 2WD-6 Ft. Box(1986)
66=Comanche 2WD-7 Ft. Box(1986)
63=Comanche 4WD-6 Ft. Box(1986)
65=Comanche 4WD-7 Ft. Box(1986)
15=Grand Wagoneer 4 Dr.(1984-86)
25=J-10 Truck 7 Ft. Box(1981-84)
26=J10 Truck 8 Ft. Box(1981-86)
27=J-20 Truck 8 Ft. Box(1981-86)
15=Wagoneer 4 Dr.(1981-83)
75=Wagoneer 4WD-4 Dr.(1984-86)

BODY
CJ=CJ-5, CJ-6, CJ-7, CJ-8, Scrambler(1981-86)
MJ=Comanche Pickup(1986)

STYLES
SJ=Wagoneer(1981-83), Grand Wagoneer(1984-86), Cherokee(1981-83), J-10, J-20(1981-86)
XJ=Wagoneer(1984-86), Cherokee(1984-86)

AR = Use as Required - = Non Illustrated Part P.A.R. = Paint as Required

« RETURN TO GROUP INDEX »

ENGINE OILING CJ-5,6,7,8, SCRAMBLER
Figure 9B-800

81J56 800

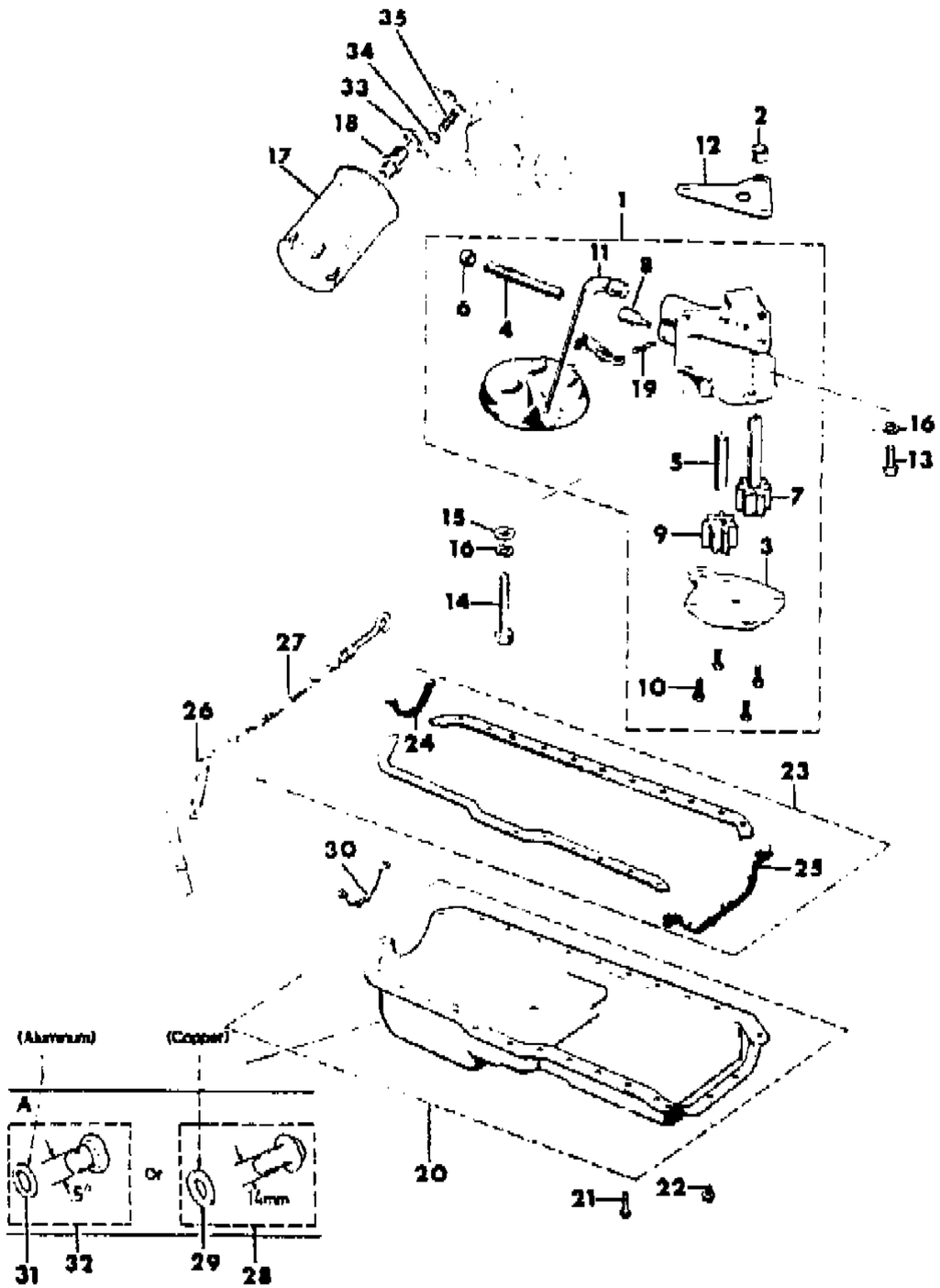

ITEM	PART NUMBER	QTY	BODY	MODEL	DESCRIPTION
28	8350 1425	1			PLUG PACKAGE
29	J324 3136	1			GASKET, Copper
30	J324 3116	1			SUPPORT
31	J317 0271	1			GASKET, Aluminum
32					PLUG PACKAGE
	J812 1449	1			Non-Magnetic
	J320 6696	1			Magnetic
33	J317 3225	1			RETAINER
34	J317 3203	1			VALVE
35	J317 3224	1			SPRING

MODEL CODES

16=Cherokee 2 Dr.(1981-83)
17=Cherokee 2 Dr.(1981-83)
73=Cherokee 2WD-2 Dr.(1984-86)
74=Cherokee 2WD-4 Dr.(1984-86)
18=Cherokee 4 Dr.(1981-83)
77=Cherokee 4WD-2 Dr.(1984-86)
78=Cherokee 4WD-4 Dr.(1984-86)
85=CJ-5 (1981-83)
86=CJ-6(1981)
87=CJ-7(1981-86)
88=CJ-8, Scrambler(1981-86)
64=Comanche 2WD-6 Ft. Box(1986)
66=Comanche 2WD-7 Ft. Box(1986)
63=Comanche 4WD-6 Ft. Box(1986)
65=Comanche 4WD-7 Ft. Box(1986)
15=Grand Wagoneer 4 Dr.(1984-86)
25=J-10 Truck 7 Ft. Box(1981-84)
26=J10 Truck 8 Ft. Box(1981-86)
27=J-20 Truck 8 Ft. Box(1981-86)
15=Wagoneer 4 Dr.(1981-83)
75=Wagoneer 4WD-4 Dr.(1984-86)

BODY
CJ=CJ-5, CJ-6, CJ-7, CJ-8, Scrambler(1981-86)
MJ=Comanche Pickup(1986)

STYLES
SJ=Wagoneer(1981-83), Grand Wagoneer(1984-86), Cherokee(1981-83), J-10, J-20(1981-86)
XJ=Wagoneer(1984-86), Cherokee(1984-86)

AR = Use as Required - = Non Illustrated Part P.A.R. = Paint as Required

« RETURN TO GROUP INDEX

ENGINE OIL FILTER, REMOTE SEVERE USE CJ-5,6,7,8, SCRAMBLER
Figure 9B-900

81J56 900

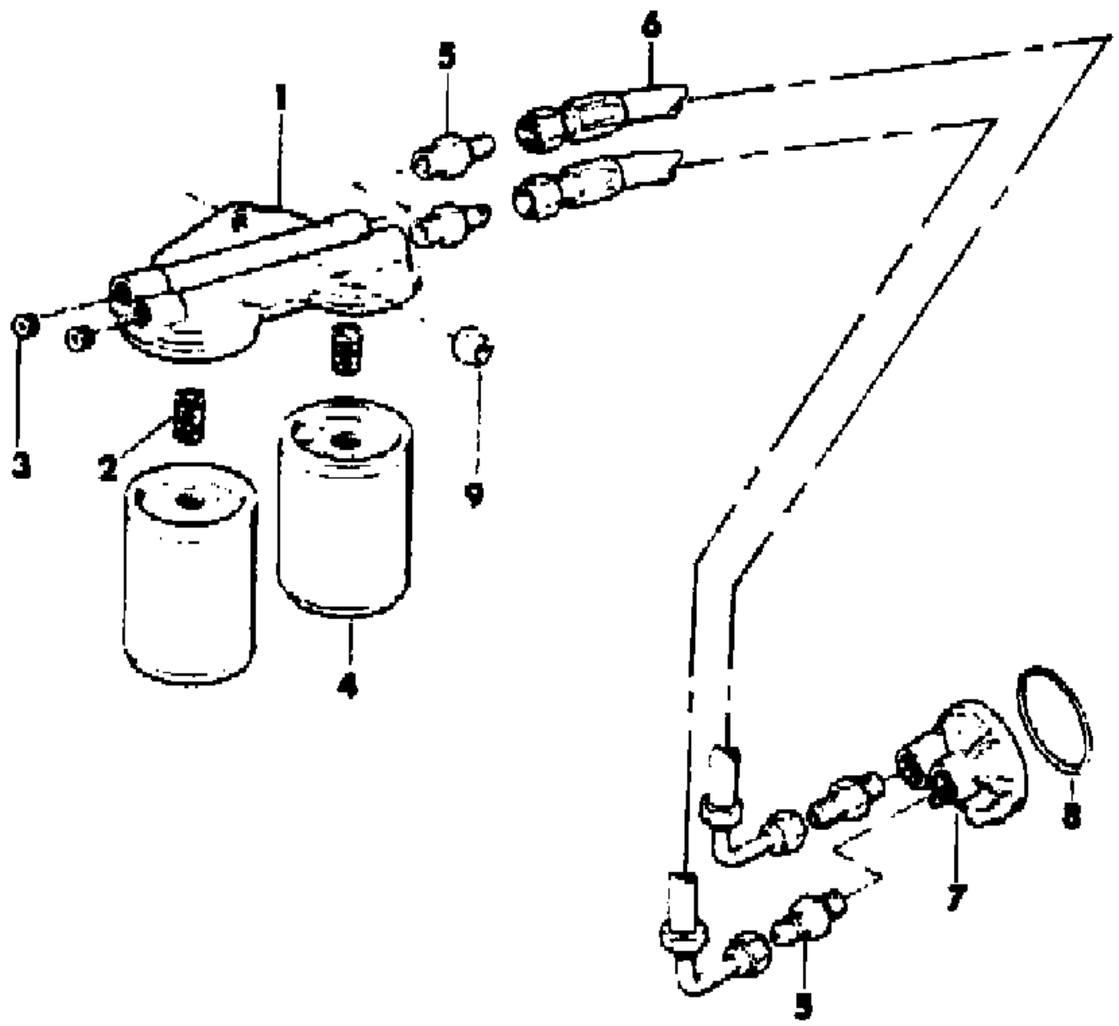

ITEM	PART NUMBER	QTY	BODY	MODEL	DESCRIPTION
1	J805 1353	1			BASE
2	J805 1354	2			NIPPLE
3	J805 1412	2			PLUG
4	J805 1330	2			FILTER, Engine Oil
5	J805 3020	4			FITTING ***
6	J805 3016	2			HOSE
7	J805 1351	1			ADAPTER
8	J805 1352	1			O-RING
9	J012 0376	1			NUT

MODEL CODES

16=Cherokee 2 Dr.(1981-83)
17=Cherokee 2 Dr.(1981-83)
73=Cherokee 2WD-2 Dr.(1984-86)
74=Cherokee 2WD-4 Dr.(1984-86)
18=Cherokee 4 Dr.(1981-83)
77=Cherokee 4WD-2 Dr.(1984-86)
78=Cherokee 4WD-4 Dr.(1984-86)
85=CJ-5 (1981-83)
86=CJ-6(1981)
87=CJ-7(1981-86)
88=CJ-8, Scrambler(1981-86)
64=Comanche 2WD-6 Ft. Box(1986)
66=Comanche 2WD-7 Ft. Box(1986)
63=Comanche 4WD-6 Ft. Box(1986)
65=Comanche 4WD-7 Ft. Box(1986)
15=Grand Wagoneer 4 Dr.(1984-86)
25=J-10 Truck 7 Ft. Box(1981-84)
26=J10 Truck 8 Ft. Box(1981-86)
27=J-20 Truck 8 Ft. Box(1981-86)
15=Wagoneer 4 Dr.(1981-83)
75=Wagoneer 4WD-4 Dr.(1984-86)

BODY
CJ=CJ-5, CJ-6, CJ-7, CJ-8, Scrambler(1981-86)
MJ=Comanche Pickup(1986)

STYLES
SJ=Wagoneer(1981-83), Grand Wagoneer(1984-86), Cherokee(1981-83), J-10, J-20(1981-86)
XJ=Wagoneer(1984-86), Cherokee(1984-86)

AR = Use as Required - = Non Illustrated Part P.A.R. = Paint as Required

« RETURN TO GROUP INDEX

MANIFOLD, INTAKE AND EXHAUST CJ-5,6,7,8, SCRAMBLER
Figure 9B-1000

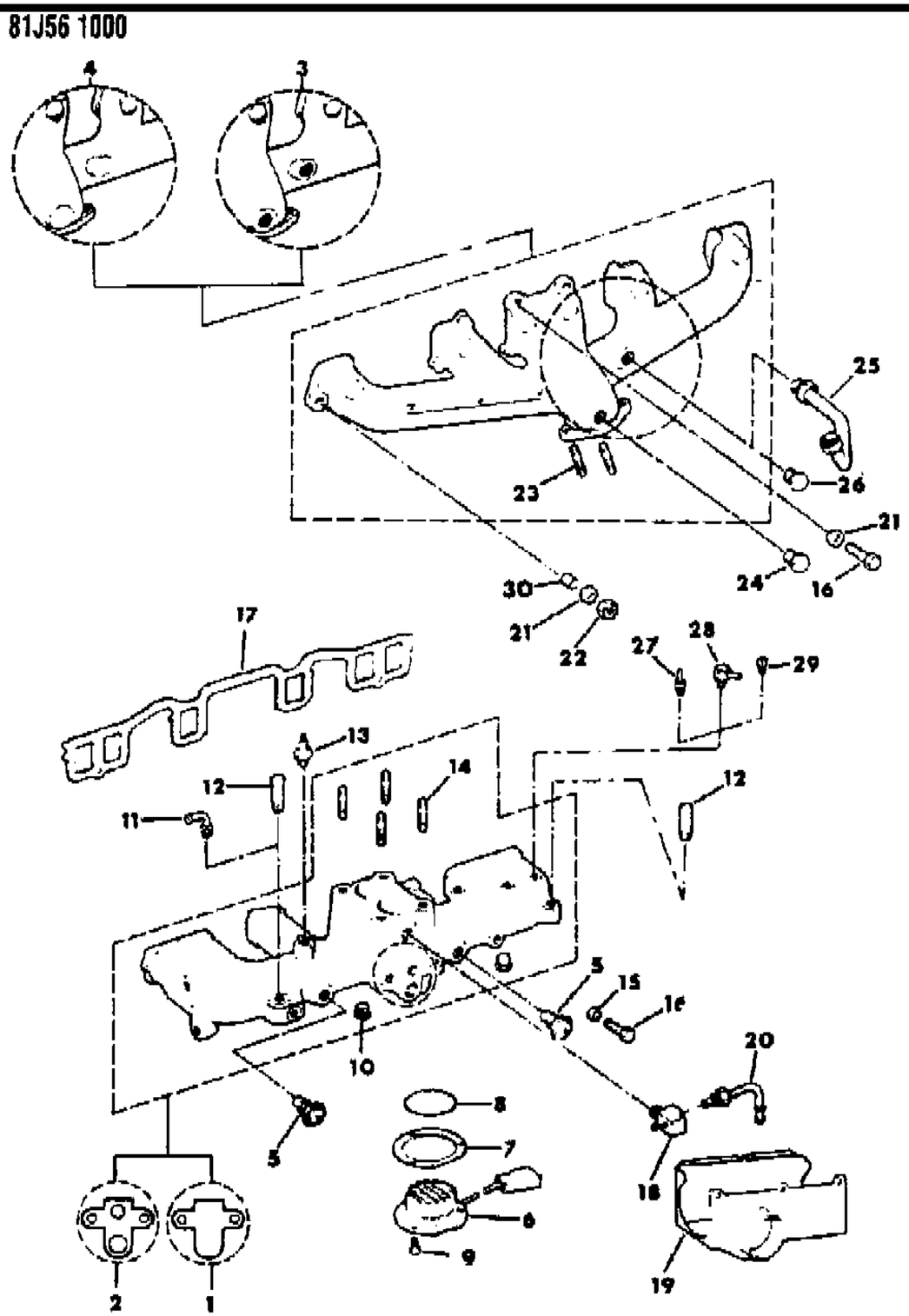

ITEM	PART NUMBER	QTY	BODY	MODEL	DESCRIPTION
1	3300 0337	1			MANIFOLD, Intake, Export, Non-Regulated Markets, without Exhaust Emission Pump
2					MANIFOLD, Intake
	J813 3011	1			1981-82
	8350 0204	1			1983-86
3					MANIFOLD, Exhaust
	J323 7427	1			1981-82
	J323 7426	1			1983-86
	J323 7426	1			1981-86: CANADA, Without Exhaust Emission Pump
	J323 7426	1			1981-86: With Exhaust Gas Recirculation, without Exhaust Emission Pump
	J323 7427	1			1981-86: With Exhaust Emission Pump, With Exhaust Gas Recirculation
4	3300 0584	1			MANIFOLD, Exhaust, 1983-86, EXPORT, Without Exhaust Emission Pump, Without Exhaust Gas Recirculation
5					SWITCH
	J323 9065	1			1981: US-49 States
	J323 9126	1			1981: US-California Only
	J322 2254	1			1982
	J323 9065	1			1982: EXPORT
	J324 2321	1			1983-86: One Terminal
	J324 2318	1			1983-86: Two Terminals
6					HEATER, Early Fuel Evaporation
	J323 8718	1			1981-82
	J324 2601	1			1983-86
7	J323 8909	1			GASKET
8	J420 0431	1			O-RING
9	J018 0016	3			BOLT
10	S940 9961	2			PLUG
11	J324 0081	1			ELBOW
12	J314 2368	2			NIPPLE
13	3300 0902	1			SENSOR, Knock, 1983-86
14	J400 6722	4			STUD
15	8350 4222	8			WASHER, Clamp
16	J018 6622	10			BOLT
17	J323 7775	1			GASKET
18	J323 9145	1			FITTING ***
19	J323 8506	1			SHROUD, Exhaust Manifold ***
20	J536 2870	1			TUBE, Vacuum

MODEL CODES

16=Cherokee 2 Dr.(1981-83)
17=Cherokee 2 Dr.(1981-83)
73=Cherokee 2WD-2 Dr.(1984-86)
74=Cherokee 2WD-4 Dr.(1984-86)
18=Cherokee 4 Dr.(1981-83)
77=Cherokee 4WD-2 Dr.(1984-86)
78=Cherokee 4WD-4 Dr.(1984-86)
85=CJ-5 (1981-83)
86=CJ-6(1981)
87=CJ-7(1981-86)
88=CJ-8, Scrambler(1981-86)
64=Comanche 2WD-6 Ft. Box(1986)
66=Comanche 2WD-7 Ft. Box(1986)
63=Comanche 4WD-6 Ft. Box(1986)
65=Comanche 4WD-7 Ft. Box(1986)
15=Grand Wagoneer 4 Dr.(1984-86)
25=J-10 Truck 7 Ft. Box(1981-84)
26=J10 Truck 8 Ft. Box(1981-86)
27=J-20 Truck 8 Ft. Box(1981-86)
15=Wagoneer 4 Dr.(1981-83)
75=Wagoneer 4WD-4 Dr.(1984-86)

BODY
CJ=CJ-5, CJ-6, CJ-7, CJ-8, Scrambler(1981-86)
MJ=Comanche Pickup(1986)

STYLES
SJ=Wagoneer(1981-83), Grand Wagoneer(1984-86), Cherokee(1981-83), J-10, J-20(1981-86)
XJ=Wagoneer(1984-86), Cherokee(1984-86)

AR = Use as Required - = Non Illustrated Part P.A.R. = Paint as Required

« RETURN TO GROUP INDEX »

MANIFOLD, INTAKE AND EXHAUST CJ-5,6,7,8, SCRAMBLER
Figure 9B-1000

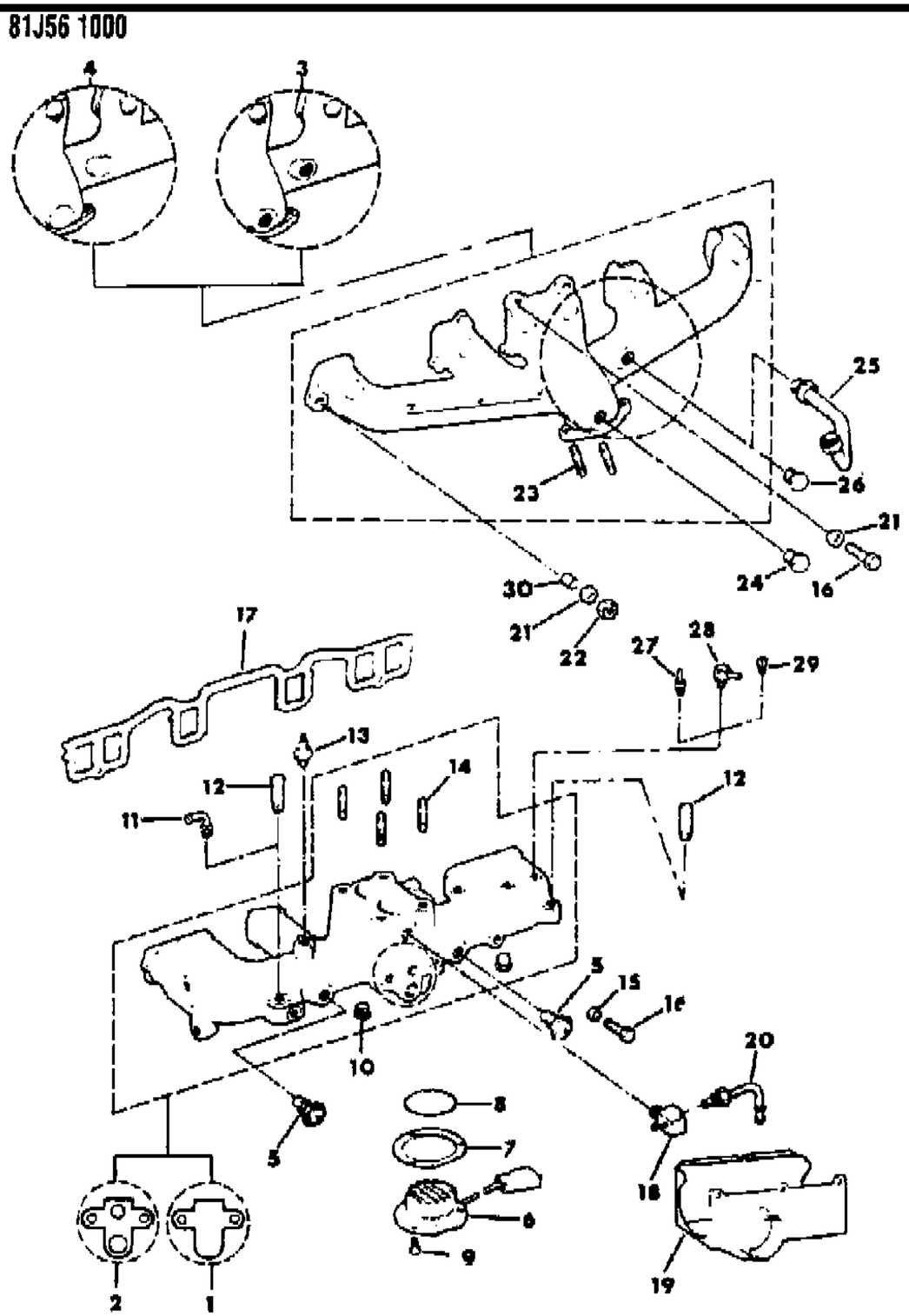

ITEM	PART NUMBER	QTY	BODY	MODEL	DESCRIPTION
21	J317 3077	4			WASHER
22	J535 1688	2			NUT
23	J400 6547	2			STUD
24	J420 0413	1			PLUG
25	J323 7776	1			TUBE, EGR
26	J063 9979	1			PLUG
27	J321 5574	1			FITTING ***
28	J323 9146	1			FITTING ***
29	J010 3877	1			PLUG
30	3300 4026	1			SPACER

MODEL CODES

16=Cherokee 2 Dr.(1981-83)
17=Cherokee 2 Dr.(1981-83)
73=Cherokee 2WD-2 Dr.(1984-86)
74=Cherokee 2WD-4 Dr.(1984-86)
18=Cherokee 4 Dr.(1981-83)
77=Cherokee 4WD-2 Dr.(1984-86)
78=Cherokee 4WD-4 Dr.(1984-86)
85=CJ-5 (1981-83)
86=CJ-6(1981)
87=CJ-7(1981-86)
88=CJ-8, Scrambler(1981-86)
64=Comanche 2WD-6 Ft. Box(1986)
66=Comanche 2WD-7 Ft. Box(1986)
63=Comanche 4WD-6 Ft. Box(1986)
65=Comanche 4WD-7 Ft. Box(1986)
15=Grand Wagoneer 4 Dr.(1984-86)
25=J-10 Truck 7 Ft. Box(1981-84)
26=J10 Truck 8 Ft. Box(1981-86)
27=J-20 Truck 8 Ft. Box(1981-86)
15=Wagoneer 4 Dr.(1981-83)
75=Wagoneer 4WD-4 Dr.(1984-86)

BODY
CJ=CJ-5, CJ-6, CJ-7, CJ-8, Scrambler(1981-86)
MJ=Comanche Pickup(1986)

STYLES
SJ=Wagoneer(1981-83), Grand Wagoneer(1984-86), Cherokee(1981-83), J-10, J-20(1981-86)
XJ=Wagoneer(1984-86), Cherokee(1984-86)

AR = Use as Required - = Non Illustrated Part P.A.R. = Paint as Required

« RETURN TO GROUP INDEX

ENGINE MOUNTING CJ-5,6,7,8, SCRAMBLER
Figure 9B-1050

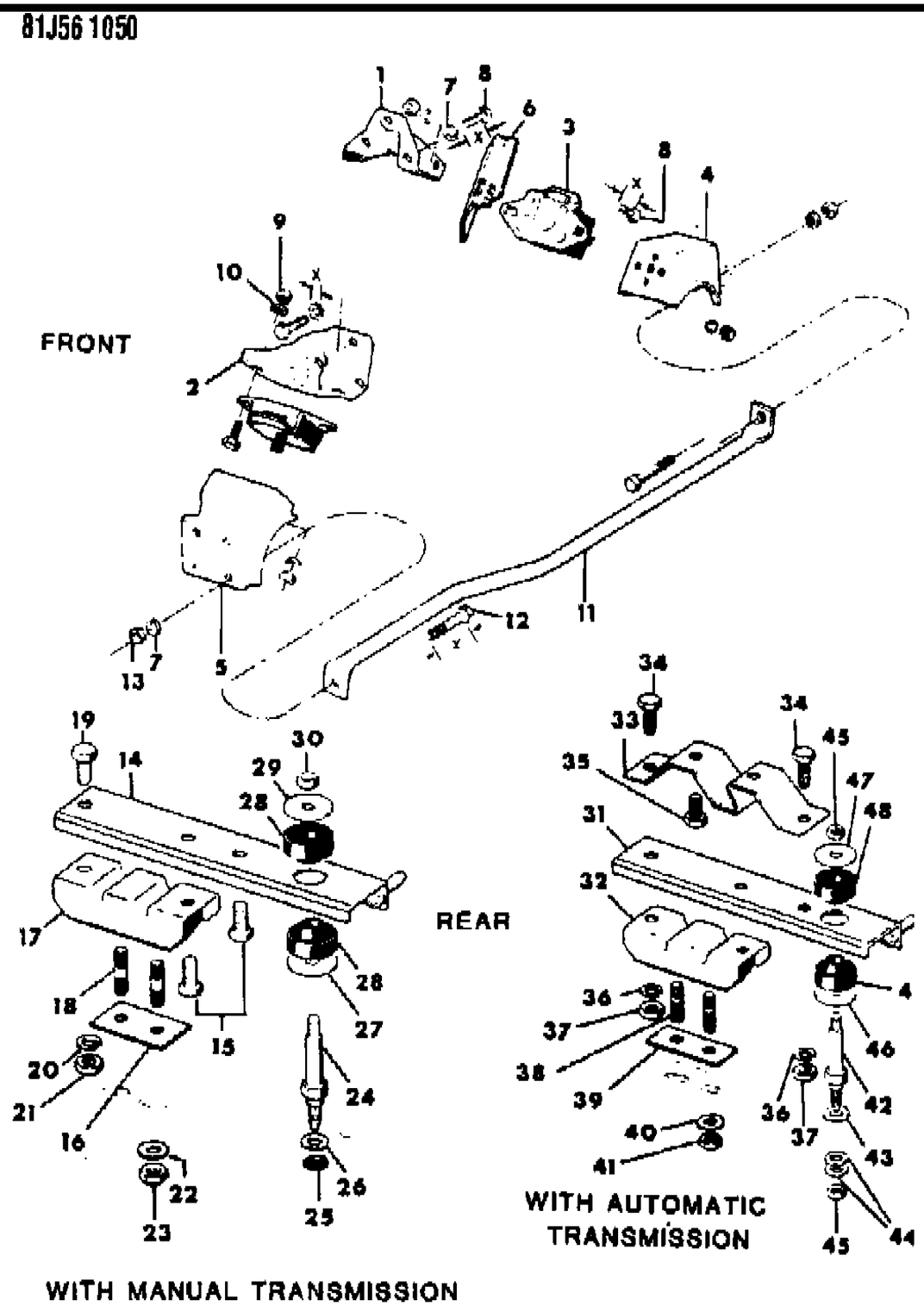

ITEM	PART NUMBER	QTY	BODY	MODEL	DESCRIPTION
1	J318 0556	1			BRACKET, Engine, Left
2	J319 8023	1			BRACKET, Engine, Right
3	J812 8488	2			MOUNT, Engine ***
4	J812 8343	1			BRACKET, Left
5	J812 8344	1			BRACKET, Right
6	J535 8715	1			SHIELD, Heat, US-California
7	J012 0382	AR			WASHER
8					BOLT
	J018 0120	AR			.75"
	J018 0122	AR			1.00"
	J018 0124	AR			1.25"
9					NUT
	J027 1506	AR			7/16"-20
	J012 0377	AR			3/8"-16
	J400 3975	AR			7/16"-14
10					WASHER
	J012 0395	AR			Plain
	J012 0383	AR			Lock
11	J535 8188	1			BAR, Tie
12					BOLT
	S018 1650	AR			2.50"
	S016 1651	AR			2.75"
	S018 1152	AR			3.00"
13	J941 1783	AR			NUT, Lock
14					BRACKET
					1981
	J536 1157	1	85		US-49 States
	J536 2783	1	85		US-California
	J536 1157	1	85,87		US-49 States, with "T-176" or "T-177" Transmission
	J536 2783	1	85,87		US-California, With "T-176" or "T-177" Transmission
	J536 2784	1	85,87		US-California
	J536 3750	1	85,87,8		1982-86
	J536 3750	1	86		1981
15	J400 6110	2			BOLT
16	J536 1885	1			SPACER
17	J137 0910	1			INSULATOR
18	J400 4819	2			STUD
19	J018 0145	1			BOLT
20	J012 0383	AR			WASHER

MODEL CODES

16=Cherokee 2 Dr.(1981-83)	78=Cherokee 4WD-4 Dr.(1984-86)	64=Comanche 2WD-6 Ft. Box(1986)	25=J-10 Truck 7 Ft. Box(1981-84)
17=Cherokee 2 Dr.(1981-83)	85=CJ-5 (1981-83)	66=Comanche 2WD-7 Ft. Box(1986)	26=J10 Truck 8 Ft. Box(1981-86)
73=Cherokee 2WD-2 Dr.(1984-86)	86=CJ-6(1981)	63=Comanche 4WD-6 Ft. Box(1986)	27=J-20 Truck 8 Ft. Box(1981-86)
74=Cherokee 2WD-4 Dr.(1984-86)	87=CJ-7(1981-86)	65=Comanche 4WD-7 Ft. Box(1986)	15=Wagoneer 4 Dr.(1981-83)
18=Cherokee 4 Dr.(1981-83)	88=CJ-8, Scrambler(1981-86)	15=Grand Wagoneer 4 Dr.(1984-86)	75=Wagoneer 4WD-4 Dr.(1984-86)
77=Cherokee 4WD-2 Dr.(1984-86)			

BODY
CJ=CJ-5, CJ-6, CJ-7, CJ-8, Scrambler(1981-86)
MJ=Comanche Pickup(1986)

STYLES
SJ=Wagoneer(1981-83), Grand Wagoneer(1984-86), Cherokee(1981-83), J-10, J-20(1981-86)
XJ=Wagoneer(1984-86), Cherokee(1984-86)

AR = Use as Required - = Non Illustrated Part P.A.R. = Paint as Required

« RETURN TO GROUP INDEX »

ENGINE MOUNTING CJ-5,6,7,8, SCRAMBLER
Figure 9B-1050

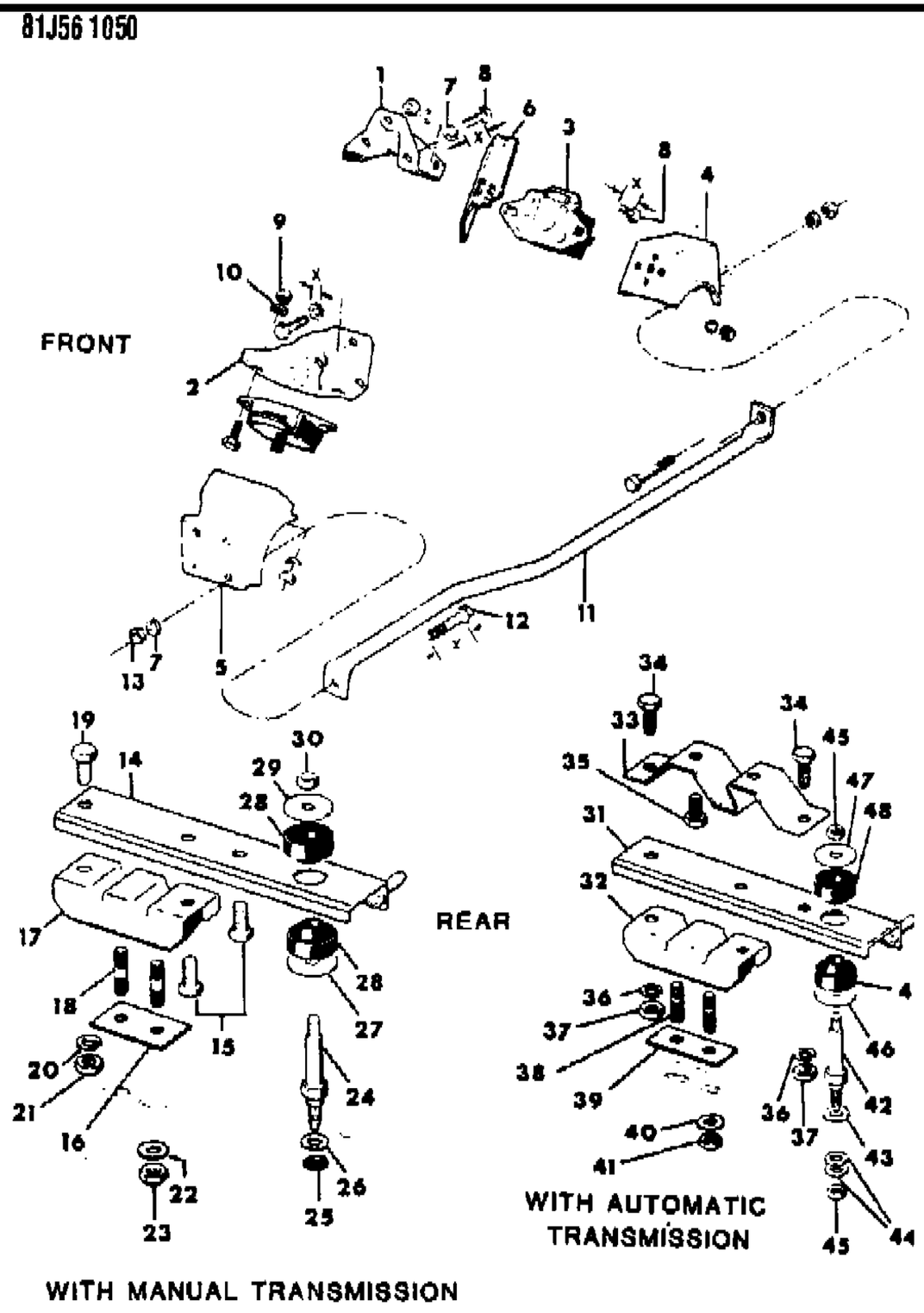

ITEM	PART NUMBER	QTY	BODY	MODEL	DESCRIPTION
21	J027 1501	AR			NUT
22	J400 1120	2			WASHER
23	J941 3215	2			NUT
24	J535 8879	1			STUD
25	J941 1783	1			NUT
26	J400 1134	1			WASHER
27	J094 1399	1			WASHER
28	J094 5266	2			INSULATOR
29	J094 5269	1			WASHER
30	J941 1783	1			NUT
31					BRACKET
					1981
	J536 1323	1			US-49 States
	J536 2785	1			US-California
	J536 2778	1			1982-86
32	J137 0910	1			INSULATOR
33	J535 9706	1			ADAPTER
34	J018 0145	2			BOLT
35	J400 4110	2			BOLT
36	J012 0383	2			WASHER
37	J027 1501	2			NUT
38	J400 4819	2			STUD
39	J536 1885	1			SPACER
40	J400 1120	2			WASHER
41	J941 3215	2			NUT
42	J535 8879	1			STUD
43	J400 1134	1			WASHER
44	J400 1104	2			WASHER
45	J941 1783	2			NUT
46	J094 1399	1			WASHER
47	J094 5269	2			WASHER
48	J094 5266	2			INSULATOR

MODEL CODES

16=Cherokee 2 Dr.(1981-83)
17=Cherokee 2 Dr.(1981-83)
73=Cherokee 2WD-2 Dr.(1984-86)
74=Cherokee 2WD-4 Dr.(1984-86)
18=Cherokee 4 Dr.(1981-83)
77=Cherokee 4WD-2 Dr.(1984-86)
78=Cherokee 4WD-4 Dr.(1984-86)
85=CJ-5 (1981-83)
86=CJ-6(1981)
87=CJ-7(1981-86)
88=CJ-8, Scrambler(1981-86)
64=Comanche 2WD-6 Ft. Box(1986)
66=Comanche 2WD-7 Ft. Box(1986)
63=Comanche 4WD-6 Ft. Box(1986)
65=Comanche 4WD-7 Ft. Box(1986)
15=Grand Wagoneer 4 Dr.(1984-86)
25=J-10 Truck 7 Ft. Box(1981-84)
26=J10 Truck 8 Ft. Box(1981-86)
27=J-20 Truck 8 Ft. Box(1981-86)
15=Wagoneer 4 Dr.(1981-83)
75=Wagoneer 4WD-4 Dr.(1984-86)

BODY
CJ=CJ-5, CJ-6, CJ-7, CJ-8, Scrambler(1981-86)
MJ=Comanche Pickup(1986)

STYLES
SJ=Wagoneer(1981-83), Grand Wagoneer(1984-86), Cherokee(1981-83), J-10, J-20(1981-86)
XJ=Wagoneer(1984-86), Cherokee(1984-86)

AR = Use as Required - = Non Illustrated Part P.A.R. = Paint as Required

« RETURN TO GROUP INDEX

BLOCK, ENGINE XJ CHEROKEE, XJ WAGONEER, COMANCHE
Figure 9B-1100

81J56 1100

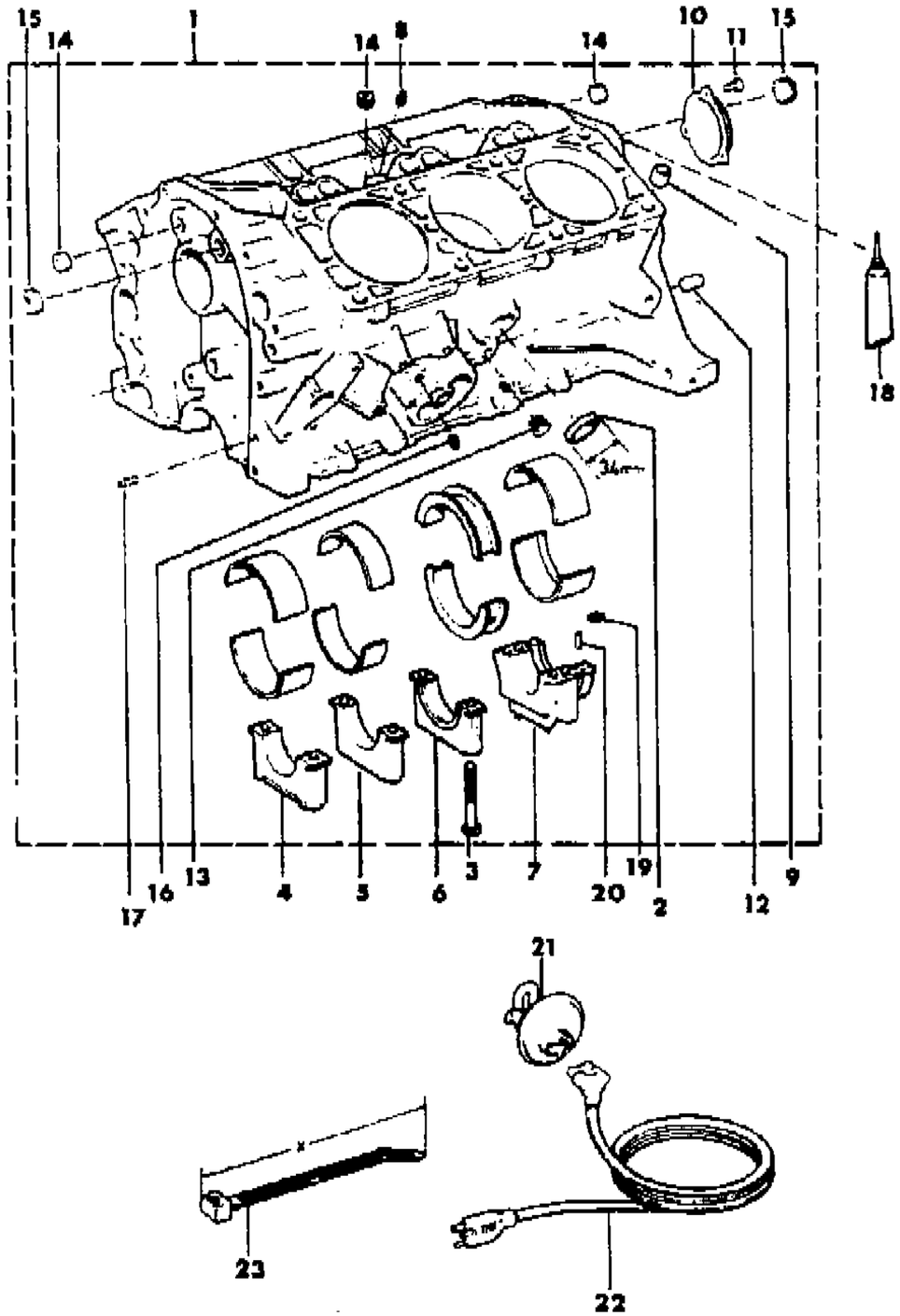

ITEM	PART NUMBER	QTY	BODY	MODEL	DESCRIPTION
1					BLOCK, Engine ***
	8350 0707	1			1984
	8350 2057	1			1985-86
	8350 1875	1			(Short Engine)
2	8350 0708	6			PLUG
3	8350 0710	8			BOLT
4	8350 0711	1			CAP, 1984
5	8350 0712	1			CAP, 1984
6	8350 0713	1			CAP, 1984
7	8350 0714	1			CAP, 1984
8	8350 0732	AR			PLUG
9	8350 0738	4			PIN
10	8350 0771	1			COVER, Camshaft Rear
11	8350 0772	3			BOLT
12	8350 0796	2			PIN
13	8350 0709	2			PLUG
14	8350 0733	AR			PLUG
15	8350 0734	AR			PLUG
16	8350 0737	AR			PLUG
17	8350 0725	AR			PIN
18	J899 3317	1			SEALER ***
19	8350 1887	AR			O-RING, 1985-86
20	8350 0725	AR			PIN, 1985-86
21	3300 1677	1			HEATER, Engine Block
22	5600 1153	1			CORD, Power Supply
23					STRAP, Tie
	J322 3227	AR			200mm
	J369 3058	AR			300mm
	J323 0270	AR			350mm
	J323 5187	AR			450mm

MODEL CODES

16=Cherokee 2 Dr.(1981-83)
17=Cherokee 2 Dr.(1981-83)
73=Cherokee 2WD-2 Dr.(1984-86)
74=Cherokee 2WD-4 Dr.(1984-86)
18=Cherokee 4 Dr.(1981-83)
77=Cherokee 4WD-2 Dr.(1984-86)
78=Cherokee 4WD-4 Dr.(1984-86)
85=CJ-5 (1981-83)
86=CJ-6(1981)
87=CJ-7(1981-86)
88=CJ-8, Scrambler(1981-86)
64=Comanche 2WD-6 Ft. Box(1986)
66=Comanche 2WD-7 Ft. Box(1986)
63=Comanche 4WD-6 Ft. Box(1986)
65=Comanche 4WD-7 Ft. Box(1986)
15=Grand Wagoneer 4 Dr.(1984-86)
25=J-10 Truck 7 Ft. Box(1981-84)
26=J10 Truck 8 Ft. Box(1981-86)
27=J-20 Truck 8 Ft. Box(1981-86)
15=Wagoneer 4 Dr.(1981-83)
75=Wagoneer 4WD-4 Dr.(1984-86)

BODY
CJ=CJ-5, CJ-6, CJ-7, CJ-8, Scrambler(1981-86)
MJ=Comanche Pickup(1986)

STYLES
SJ=Wagoneer(1981-83), Grand Wagoneer(1984-86), Cherokee(1981-83), J-10, J-20(1981-86)
XJ=Wagoneer(1984-86), Cherokee(1984-86)

AR = Use as Required - = Non Illustrated Part P.A.R. = Paint as Required

« RETURN TO GROUP INDEX

GASKET SET XJ CHEROKEE, XJ WAGONEER COMANCHE
Figure 9B-1150

ILLUSTRATION NOT AVAILABLE AT TIME OF PUBLICATION

ITEM	PART NUMBER	QTY	BODY	MODEL	DESCRIPTION
1					GASKET PACKAGE, Engine Upper
	8350 2133	1			T Eng.
	8350 3183	1			U Eng.
2	8350 2134	1			GASKET PACKAGE, Engine Lower

MODEL CODES

16=Cherokee 2 Dr.(1981-83)	78=Cherokee 4WD-4 Dr.(1984-86)	64=Comanche 2WD-6 Ft. Box(1986)	25=J-10 Truck 7 Ft. Box(1981-84)
17=Cherokee 2 Dr.(1981-83)	85=CJ-5 (1981-83)	66=Comanche 2WD-7 Ft. Box(1986)	26=J10 Truck 8 Ft. Box(1981-86)
73=Cherokee 2WD-2 Dr.(1984-86)	86=CJ-6(1981)	63=Comanche 4WD-6 Ft. Box(1986)	27=J-20 Truck 8 Ft. Box(1981-86)
74=Cherokee 2WD-4 Dr.(1984-86)	87=CJ-7(1981-86)	65=Comanche 4WD-7 Ft. Box(1986)	15=Wagoneer 4 Dr.(1981-83)
18=Cherokee 4 Dr.(1981-83)	88=CJ-8, Scrambler(1981-86)	15=Grand Wagoneer 4 Dr.(1984-86)	75=Wagoneer 4WD-4 Dr.(1984-86)
77=Cherokee 4WD-2 Dr.(1984-86)			

BODY
CJ=CJ-5, CJ-6, CJ-7, CJ-8, Scrambler(1981-86)
MJ=Comanche Pickup(1986)

STYLES
SJ=Wagoneer(1981-83), Grand Wagoneer(1984-86), Cherokee(1981-83), J-10, J-20(1981-86)
XJ=Wagoneer(1984-86), Cherokee(1984-86)

AR = Use as Required - = Non Illustrated Part P.A.R. = Paint as Required

« RETURN TO GROUP INDEX

CYLINDER HEAD XJ CHEROKEE, XJ WAGONEER, COMANCHE
Figure 9B-1200

81J56 1200

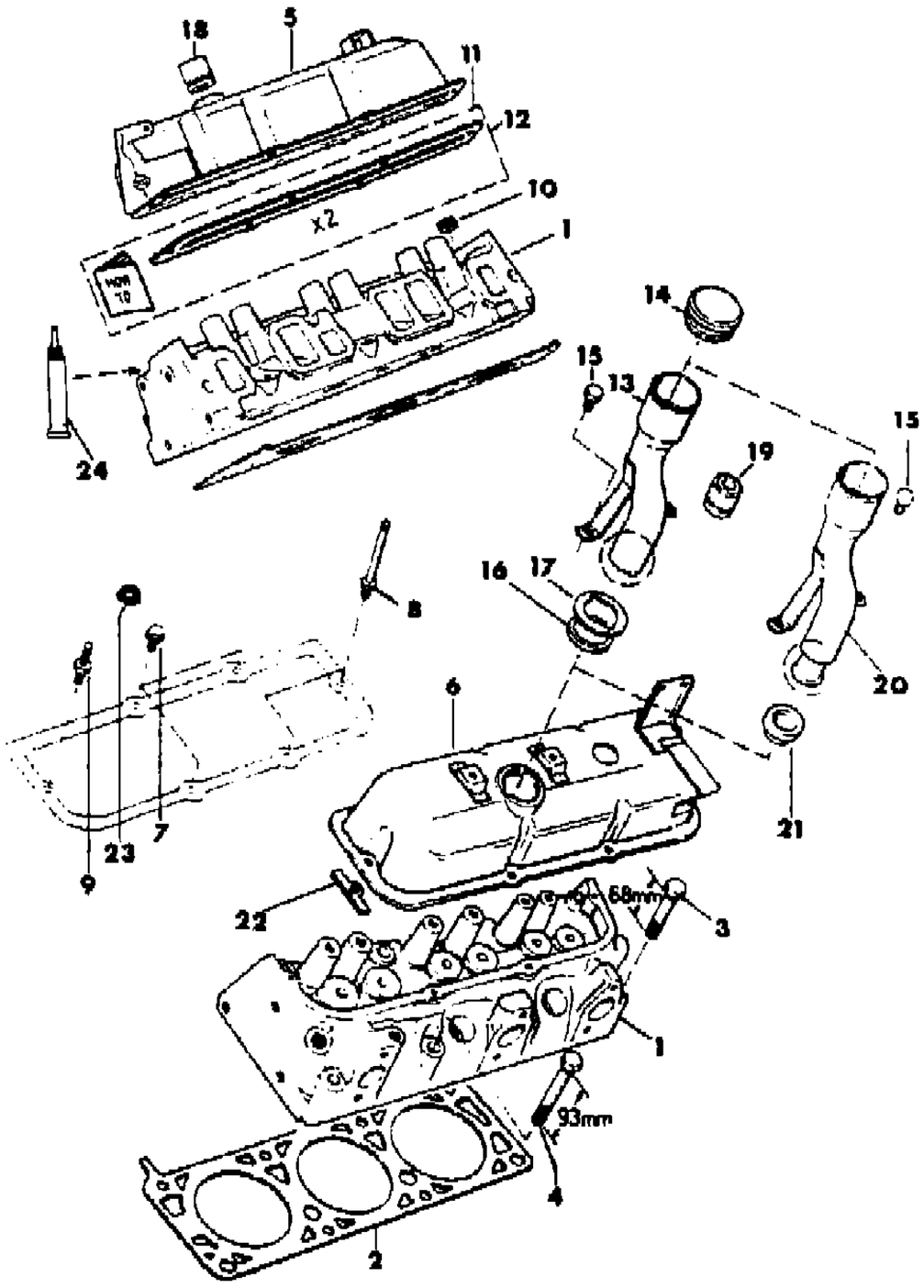

ITEM	PART NUMBER	QTY	BODY	MODEL	DESCRIPTION
1	8350 0730	1			HEAD, Engine Cylinder
2					GASKET
	8350 0731	1			1984
	8350 2172	1			1985-86
3	8350 0736	8			BOLT
4	8350 0710	8			BOLT
5					COVER, Cylinder Head, Right
	8350 0757	1			1984-86: For Engine "T"
	8350 2822	1			1986: For Engine "U"
6					COVER, Cylinder Head Left
	8350 0758	1			1984-86: For Engine "T"
	8350 2823	1			1986: For Engine "U"
7	8350 0759	8			BOLT, 1984-86: For Engine "T"
8					STUD
	8350 0760	3			1984-86: For Engine "Y"
	8350 0760	1			1986: For Engine "U"
9	8350 0761	1			STUD, 1984-86, For Engine "T" ***
10	8350 0734	1			PLUG
11	8350 3180	2			GASKET, 1986: For Engine "U"
12	8350 0854	1			GASKET KIT, 1984-86: For Engine "T" ***
13	3300 1283	1			TUBE, 1984-86: For Engine "T"
14	3300 1284	1			CAP
15	1150 4988	2			BOLT
16	3300 1366	1			WASHER, 1984-86: For Engine "T"
17	3300 1367	1			WASHER, 1984-86: For Engine "T"
18	5300 0957	1			GROMMET
19	8350 0832	1			GROMMET
20	5300 3543	1			TUBE, For Engine "U"
21	5300 3544	1			GROMMET, For Engine "U"
22	8350 2916	9			REINFORCEMENT, For Engine "U"
23	3420 1862	12			NUT, For Engine "U"
24	J899 3317	1			SEALER ***

MODEL CODES

16=Cherokee 2 Dr.(1981-83)
17=Cherokee 2 Dr.(1981-83)
73=Cherokee 2WD-2 Dr.(1984-86)
74=Cherokee 2WD-4 Dr.(1984-86)
18=Cherokee 4 Dr.(1981-83)
77=Cherokee 4WD-2 Dr.(1984-86)
78=Cherokee 4WD-4 Dr.(1984-86)
85=CJ-5 (1981-83)
86=CJ-6(1981)
87=CJ-7(1981-86)
88=CJ-8, Scrambler(1981-86)
64=Comanche 2WD-6 Ft. Box(1986)
66=Comanche 2WD-7 Ft. Box(1986)
63=Comanche 4WD-6 Ft. Box(1986)
65=Comanche 4WD-7 Ft. Box(1986)
15=Grand Wagoneer 4 Dr.(1984-86)
25=J-10 Truck 7 Ft. Box(1981-84)
26=J10 Truck 8 Ft. Box(1981-86)
27=J-20 Truck 8 Ft. Box(1981-86)
15=Wagoneer 4 Dr.(1981-83)
75=Wagoneer 4WD-4 Dr.(1984-86)

BODY
CJ=CJ-5, CJ-6, CJ-7, CJ-8, Scrambler(1981-86)
MJ=Comanche Pickup(1986)

STYLES
SJ=Wagoneer(1981-83), Grand Wagoneer(1984-86), Cherokee(1981-83), J-10, J-20(1981-86)
XJ=Wagoneer(1984-86), Cherokee(1984-86)

AR = Use as Required - = Non Illustrated Part P.A.R. = Paint as Required

« RETURN TO GROUP INDEX

CRANKSHAFT, FLYWHEEL AND PISTON XJ CHEROKEE, XJ WAGONEER, COMANCHE
Figure 9B-1300

81J56 1300

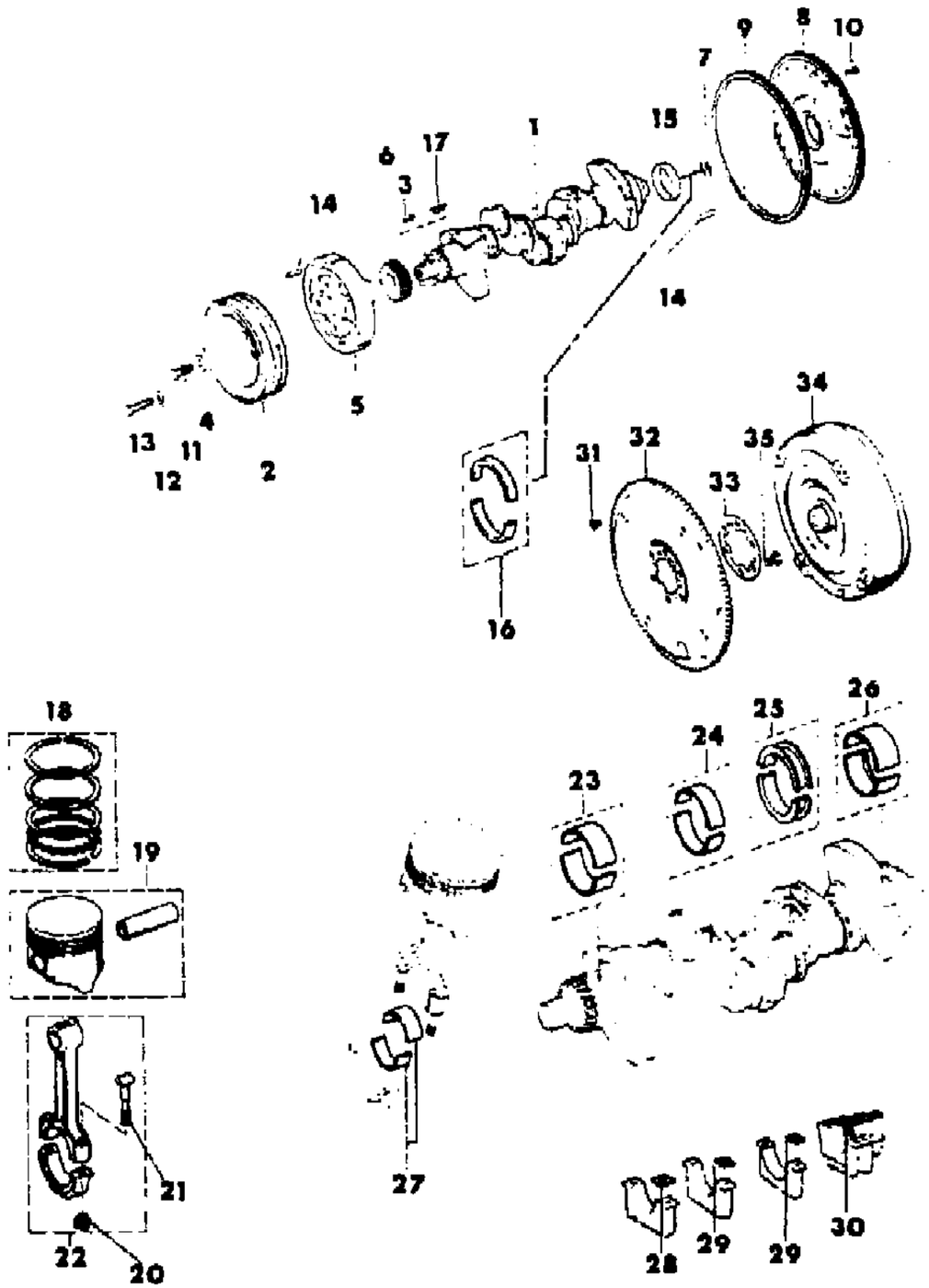

ITEM	PART NUMBER	QTY	BODY	MODEL	DESCRIPTION
1					CRANKSHAFT, Without Bearing
	8350 2056	1			1984: With One Piece Rear Main and Double Front Keyway
	8350 0785	1			1984: With Two Piece Rear Main Seal and Double Front Keyway
	8350 1896	1			1985-86: With One Piece Rear Main Seal and Double Front Keyway
	8350 4631	1			1986: With One Piece Rear Main Seal and Single Front Keyway
2	5300 1143	1			PULLEY, Crankshaft
3	8350 0789	2			KEY, Shaft
4	3420 1947	1			WASHER
5					DAMPER
	8350 0787	1			1984: With Manual Transmission
	8350 0844	1			1984: With Automatic Transmission
	8350 1488	1			1985-86
6	8350 0800	1			SPROCKET, Crankshaft
7	8350 0786	1			BUSHING, Pilot, With Manual Transmission
8					FLYWHEEL ***
	8350 0792	1			1984: With Manual Transmission
	8350 1897	1			1985-86: With Manual Transmission
9	8350 0795	1			GEAR, Ring With Manual Transmission
10	S047 6576	6			BOLT, With Manual Transmission
11	3420 1948	1			BOLT
12	3420 1554	4			WASHER
13	1150 0829	4			BOLT
14	8350 0790	AR			PIN
15					SEAL PACKAGE
	8350 0723	1			1984: 5.5mm
	8350 1888	1			1985-86: 11.0mm
16	8350 1452	1			SEAL PACKAGE, 1984
17	8350 4673	1			KEY, Shaft
18					RING PACKAGE, Piston, 1984 ***
	8350 0782	6			Standard
	8350 0783	6			+0.5mm
	8350 0784	6			+1.0mm
					RING PACKAGE, Piston, 1985-86 ***
	8350 1893	6			Standard
	8350 1894	6			+0.5mm
	8350 1895	6			+1.0mm

MODEL CODES
16=Cherokee 2 Dr.(1981-83)
17=Cherokee 2 Dr.(1981-83)
73=Cherokee 2WD-2 Dr.(1984-86)
74=Cherokee 2WD-4 Dr.(1984-86)
18=Cherokee 4 Dr.(1981-83)
77=Cherokee 4WD-2 Dr.(1984-86)
78=Cherokee 4WD-4 Dr.(1984-86)
85=CJ-5 (1981-83)
86=CJ-6(1981)
87=CJ-7(1981-86)
88=CJ-8, Scrambler(1981-86)
64=Comanche 2WD-6 Ft. Box(1986)
66=Comanche 2WD-7 Ft. Box(1986)
63=Comanche 4WD-6 Ft. Box(1986)
65=Comanche 4WD-7 Ft. Box(1986)
15=Grand Wagoneer 4 Dr.(1984-86)
25=J-10 Truck 7 Ft. Box(1981-84)
26=J10 Truck 8 Ft. Box(1981-86)
27=J-20 Truck 8 Ft. Box(1981-86)
15=Wagoneer 4 Dr.(1981-83)
75=Wagoneer 4WD-4 Dr.(1984-86)

BODY
CJ=CJ-5, CJ-6, CJ-7, CJ-8, Scrambler(1981-86)
MJ=Comanche Pickup(1986)

STYLES
SJ=Wagoneer(1981-83), Grand Wagoneer(1984-86), Cherokee(1981-83), J-10, J-20(1981-86)
XJ=Wagoneer(1984-86), Cherokee(1984-86)

AR = Use as Required - = Non Illustrated Part P.A.R. = Paint as Required

« RETURN TO GROUP INDEX »

CRANKSHAFT, FLYWHEEL AND PISTON XJ CHEROKEE, XJ WAGONEER, COMANCHE
Figure 9B-1300

81J56 1300

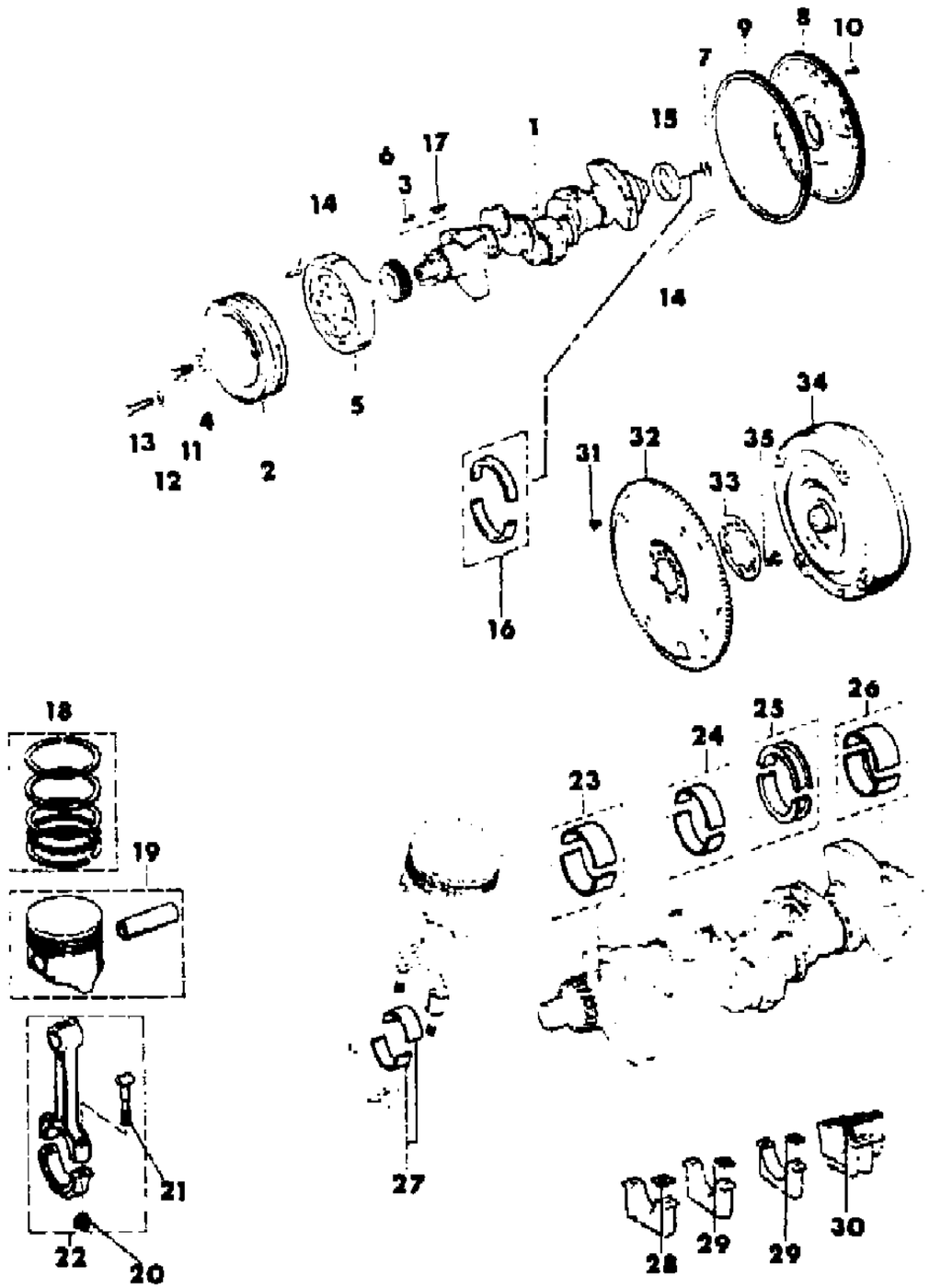

ITEM	PART NUMBER	QTY	BODY	MODEL	DESCRIPTION
19					PISTON PACKAGE, 1984 ***
	8350 0778	6			Standard
	8350 0779	6			Standard/Hi-Limit
	8350 0780	6			+0.5mm
	8350 0781	6			+1.0mm
					PISTON PACKAGE, 1985-86 ***
	8350 1889	6			Standard
	8350 1890	6			Standard/High Limit
	8350 1891	6			+0.5mm
	8350 1892	6			+1.0mm
20	S036 1970	12			NUT
21	S046 6337	12			BOLT
22	8350 0773	6			ROD, Connecting
23					BEARING PACKAGE, 1984 ***
	8350 0715	1			Standard
	8350 0716	1			-.032mm
					BEARING PACKAGE, 1985-86 ***
	8350 1962	1			Standard
	8350 1964	1			-.016mm
	8350 1965	1			-.032mm
24					BEARING PACKAGE, 1984 ***
	8350 0717	1			Standard
	8350 0718	1			-.032mm
					BEARING PACKAGE, 1985-86 ***
	8350 1963	1			Standard
	8350 1966	1			-.016mm
	8350 1967	1			-.032mm
25					BEARING PACKAGE, 1984 ***
	8350 0719	1			Standard
	8350 0720	1			-.032mm
					BEARING PACKAGE, 1985-86 ***
	8350 1968	1			Standard
	8350 1969	1			-.016mm
	8350 1970	1			-.032mm
26					BEARING PACKAGE, 1984 ***
	8350 0721	1			Standard
	8350 0722	1			-.32mm
					BEARING PACKAGE, 1985-86 ***
	8350 1962	1			Standard

MODEL CODES

16=Cherokee 2 Dr.(1981-83)
17=Cherokee 2 Dr.(1981-83)
73=Cherokee 2WD-2 Dr.(1984-86)
74=Cherokee 2WD-4 Dr.(1984-86)
18=Cherokee 4 Dr.(1981-83)
77=Cherokee 4WD-2 Dr.(1984-86)
78=Cherokee 4WD-4 Dr.(1984-86)
85=CJ-5 (1981-83)
86=CJ-6(1981)
87=CJ-7(1981-86)
88=CJ-8, Scrambler(1981-86)
64=Comanche 2WD-6 Ft. Box(1986)
66=Comanche 2WD-7 Ft. Box(1986)
63=Comanche 4WD-6 Ft. Box(1986)
65=Comanche 4WD-7 Ft. Box(1986)
15=Grand Wagoneer 4 Dr.(1984-86)
25=J-10 Truck 7 Ft. Box(1981-84)
26=J10 Truck 8 Ft. Box(1981-86)
27=J-20 Truck 8 Ft. Box(1981-86)
15=Wagoneer 4 Dr.(1981-83)
75=Wagoneer 4WD-4 Dr.(1984-86)

BODY
CJ=CJ-5, CJ-6, CJ-7, CJ-8, Scrambler(1981-86)
MJ=Comanche Pickup(1986)

STYLES
SJ=Wagoneer(1981-83), Grand Wagoneer(1984-86), Cherokee(1981-83), J-10, J-20(1981-86)
XJ=Wagoneer(1984-86), Cherokee(1984-86)

AR = Use as Required - = Non Illustrated Part P.A.R. = Paint as Required

CRANKSHAFT, FLYWHEEL AND PISTON XJ CHEROKEE, XJ WAGONEER, COMANCHE
Figure 9B-1300

81J56 1300

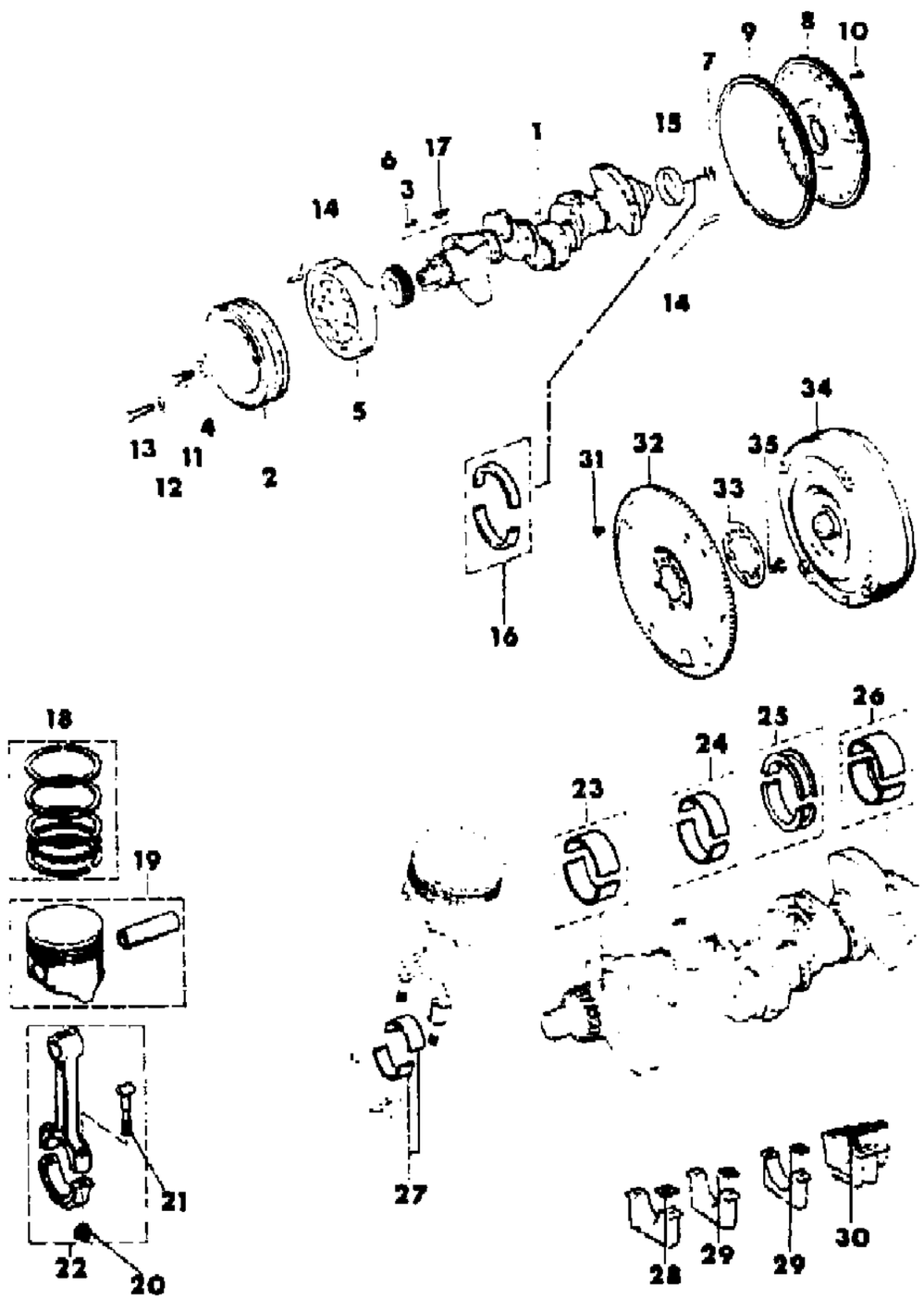

ITEM	PART NUMBER	QTY	BODY	MODEL	DESCRIPTION
	8350 1964	1			-.016mm
	8350 1965	1			-.032mm
27					BEARING PACKAGE ***
	8350 0774	6			Standard
	8350 0775	6			-.026mm
28	8350 0841	AR			SHIM, 1984 ***
29	8350 0842	AR			SHIM, 1984 ***
30	8350 0724	AR			SHIM, 1984 ***
31	J420 0412	4			BOLT
32	5300 1255	1			PLATE, Converter Drive
33	5300 1401	1			REINFORCEMENT
34					CONVERTER, Transmission
					1984-85
	5300 1378	1			EXPORT
	JR77 5040	1			Remanufactured
	5300 4327	1			1986
35	3420 1840	6			BOLT

MODEL CODES
16=Cherokee 2 Dr.(1981-83)
17=Cherokee 2 Dr.(1981-83)
73=Cherokee 2WD-2 Dr.(1984-86)
74=Cherokee 2WD-4 Dr.(1984-86)
18=Cherokee 4 Dr.(1981-83)
77=Cherokee 4WD-2 Dr.(1984-86)
78=Cherokee 4WD-4 Dr.(1984-86)
85=CJ-5 (1981-83)
86=CJ-6(1981)
87=CJ-7(1981-86)
88=CJ-8, Scrambler(1981-86)
64=Comanche 2WD-6 Ft. Box(1986)
66=Comanche 2WD-7 Ft. Box(1986)
63=Comanche 4WD-6 Ft. Box(1986)
65=Comanche 4WD-7 Ft. Box(1986)
15=Grand Wagoneer 4 Dr.(1984-86)
25=J-10 Truck 7 Ft. Box(1981-84)
26=J10 Truck 8 Ft. Box(1981-86)
27=J-20 Truck 8 Ft. Box(1981-86)
15=Wagoneer 4 Dr.(1981-83)
75=Wagoneer 4WD-4 Dr.(1984-86)

BODY
CJ=CJ-5, CJ-6, CJ-7, CJ-8, Scrambler(1981-86)
MJ=Comanche Pickup(1986)

STYLES
SJ=Wagoneer(1981-83), Grand Wagoneer(1984-86), Cherokee(1981-83), J-10, J-20(1981-86)
XJ=Wagoneer(1984-86), Cherokee(1984-86)

AR = Use as Required - = Non Illustrated Part P.A.R. = Paint as Required

« RETURN TO GROUP INDEX

CAMSHAFT AND VALVES XJ CHEROKEE, XJ WAGONEER, COMANCHE
Figure 9B-1400

81J56 1400

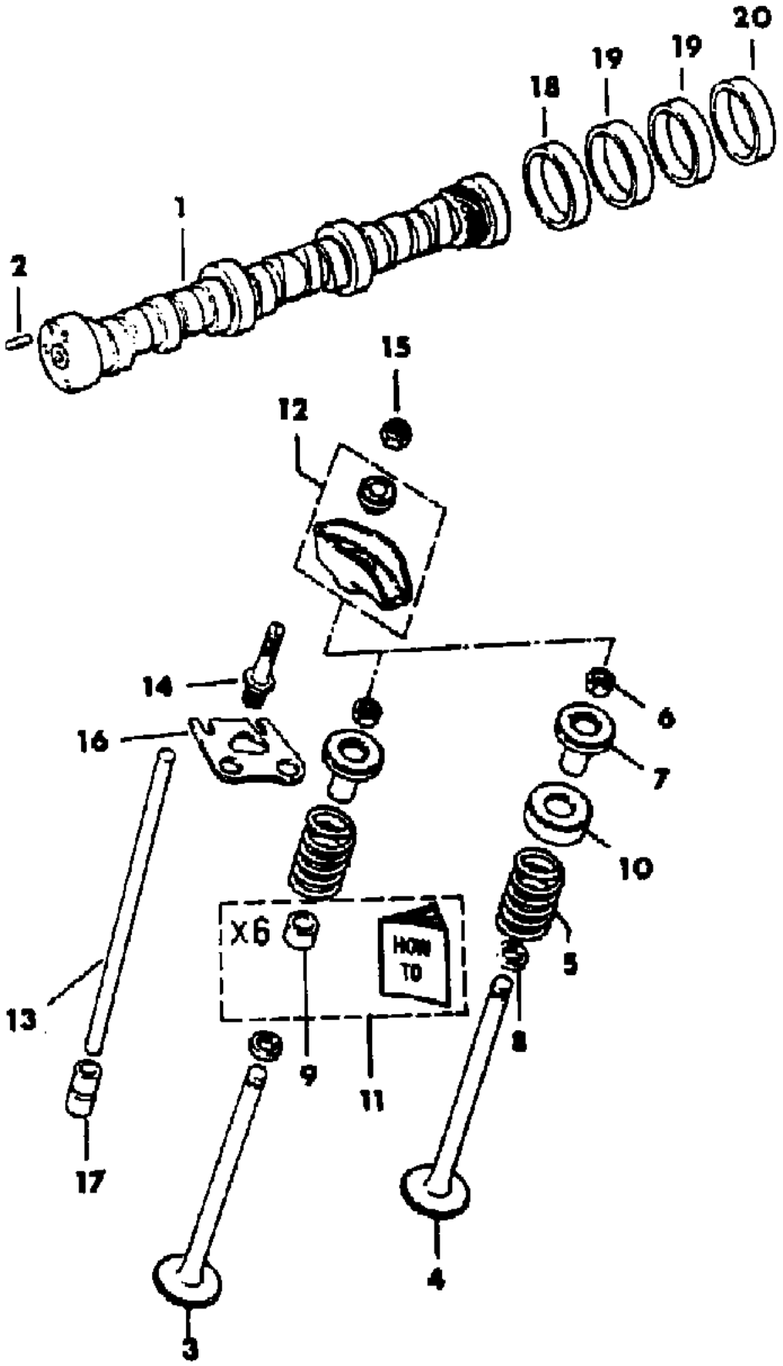

ITEM	PART NUMBER	QTY	BODY	MODEL	DESCRIPTION
1	8350 0767	1			CAMSHAFT
2	S150 3504	1			PIN
3					VALVE, Intake
	8350 0739	6			Standard
	8350 0740	6			+.089mm
	8350 0741	6			+.394mm
	8350 0742	6			+.775mm
4					VALVE, Exhaust
	8350 0743	6			Standard
	8350 0744	6			+.089mm
	8350 0745	6			+.394mm
	8350 0746	6			+.775mm
5	8350 0747	12			SPRING
6	8350 0755	24			KEEPER ***
7	8350 0754	12			RETAINER
8	8350 0751	12			SEAL
9					SEAL
	8350 0748	6			Standard
	8350 0748	6			+.003"
	8350 0749	6			+.015"
	8350 0750	6			+.030"
10	8350 0752	6			SHIELD
11	8350 0753	1			SEAL PACKAGE
12	8350 0756	12			ARM, Rocker
13	8350 0762	12			PUSHROD ***
14	8350 0763	12			STUD
15	8350 0764	12			NUT
16	8350 0765	12			GUIDE
17	8350 0766	12			TAPPET
18	8350 0768	1			BEARING
19	8350 0769	2			BEARING
20	8350 0770	1			BEARING

MODEL CODES
16=Cherokee 2 Dr.(1981-83)
17=Cherokee 2 Dr.(1981-83)
73=Cherokee 2WD-2 Dr.(1984-86)
74=Cherokee 2WD-4 Dr.(1984-86)
18=Cherokee 4 Dr.(1981-83)
77=Cherokee 4WD-2 Dr.(1984-86)
78=Cherokee 4WD-4 Dr.(1984-86)
85=CJ-5 (1981-83)
86=CJ-6(1981)
87=CJ-7(1981-86)
88=CJ-8, Scrambler(1981-86)
64=Comanche 2WD-6 Ft. Box(1986)
66=Comanche 2WD-7 Ft. Box(1986)
63=Comanche 4WD-6 Ft. Box(1986)
65=Comanche 4WD-7 Ft. Box(1986)
15=Grand Wagoneer 4 Dr.(1984-86)
25=J-10 Truck 7 Ft. Box(1981-84)
26=J10 Truck 8 Ft. Box(1981-86)
27=J-20 Truck 8 Ft. Box(1981-86)
15=Wagoneer 4 Dr.(1981-83)
75=Wagoneer 4WD-4 Dr.(1984-86)

BODY
CJ=CJ-5, CJ-6, CJ-7, CJ-8, Scrambler(1981-86)
MJ=Comanche Pickup(1986)

STYLES
SJ=Wagoneer(1981-83), Grand Wagoneer(1984-86), Cherokee(1981-83), J-10, J-20(1981-86)
XJ=Wagoneer(1984-86), Cherokee(1984-86)

AR = Use as Required - = Non Illustrated Part P.A.R. = Paint as Required

« RETURN TO GROUP INDEX

TIMING COVER XJ CHEROKEE, XJ WAGONEER COMANCHE
Figure 9B-1500

81J56 1500

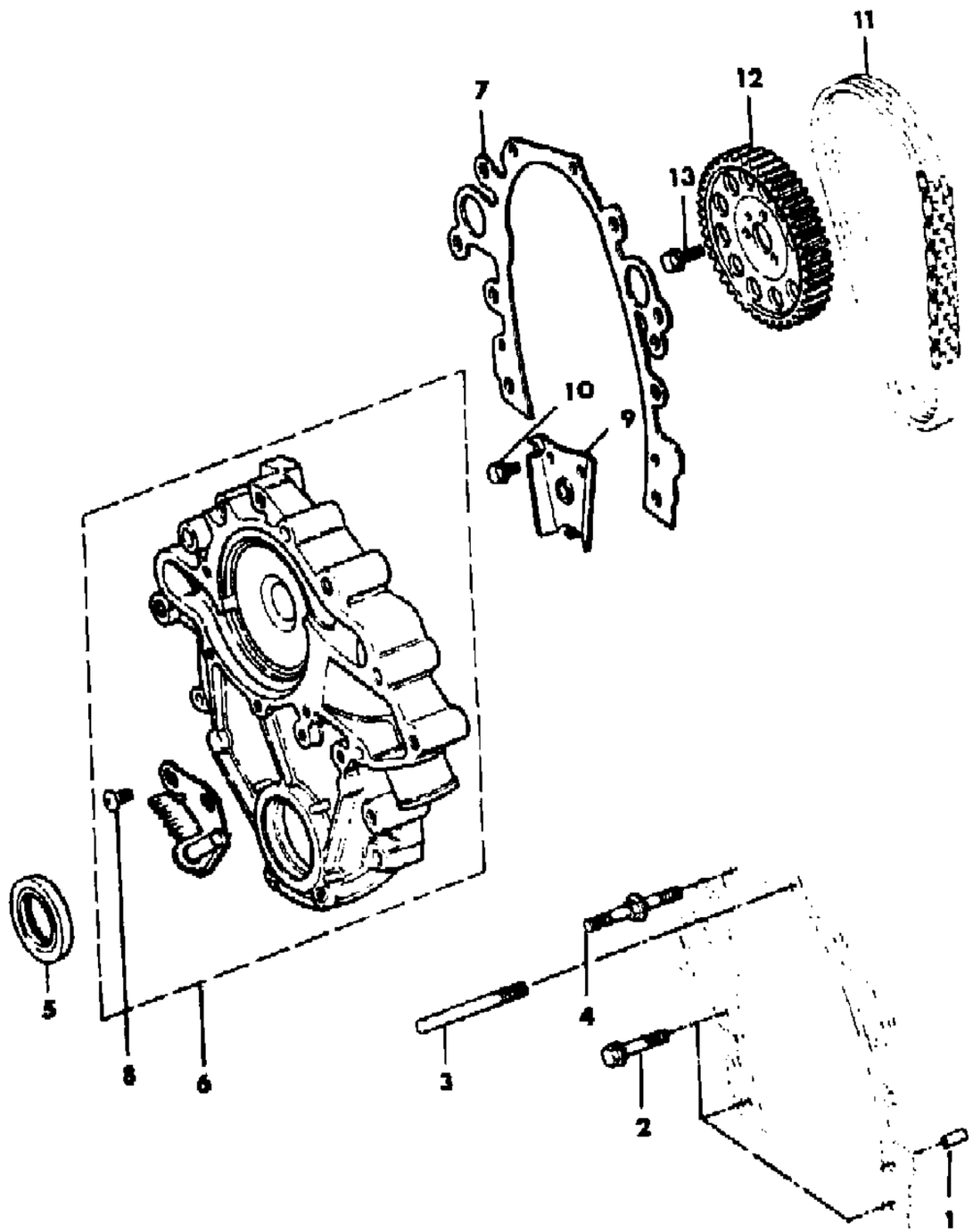

ITEM	PART NUMBER	QTY	BODY	MODEL	DESCRIPTION
1	8350 0725	2			PIN
2	S150 3990	3			BOLT
3	3420 1568	1			STUD
4	8350 0727	1			STUD
5					SEAL
	8350 0729	1			1984
	8350 1487	1			1985-86
6	8350 0728	1			COVER, Timing Case
7	8350 0843	1			GASKET
8	8350 0726	2			SCREW
9	8350 0797	1			DAMPER
10	S150 8017	2			BOLT
11	8350 0799	1			CHAIN, Timing
12	8350 0801	1			SPROCKET, Camshaft
13	S047 7280	3			BOLT

MODEL CODES

16=Cherokee 2 Dr.(1981-83)
17=Cherokee 2 Dr.(1981-83)
73=Cherokee 2WD-2 Dr.(1984-86)
74=Cherokee 2WD-4 Dr.(1984-86)
18=Cherokee 4 Dr.(1981-83)
77=Cherokee 4WD-2 Dr.(1984-86)
78=Cherokee 4WD-4 Dr.(1984-86)
85=CJ-5 (1981-83)
86=CJ-6(1981)
87=CJ-7(1981-86)
88=CJ-8, Scrambler(1981-86)
64=Comanche 2WD-6 Ft. Box(1986)
66=Comanche 2WD-7 Ft. Box(1986)
63=Comanche 4WD-6 Ft. Box(1986)
65=Comanche 4WD-7 Ft. Box(1986)
15=Grand Wagoneer 4 Dr.(1984-86)
25=J-10 Truck 7 Ft. Box(1981-84)
26=J10 Truck 8 Ft. Box(1981-86)
27=J-20 Truck 8 Ft. Box(1981-86)
15=Wagoneer 4 Dr.(1981-83)
75=Wagoneer 4WD-4 Dr.(1984-86)

BODY
CJ=CJ-5, CJ-6, CJ-7, CJ-8, Scrambler(1981-86)
MJ=Comanche Pickup(1986)

STYLES
SJ=Wagoneer(1981-83), Grand Wagoneer(1984-86), Cherokee(1981-83), J-10, J-20(1981-86)
XJ=Wagoneer(1984-86), Cherokee(1984-86)

AR = Use as Required - = Non Illustrated Part P.A.R. = Paint as Required

« RETURN TO GROUP INDEX

ENGINE OILING XJ CHEROKEE, XJ WAGONEER COMANCHE
Figure 9B-1600

81J56 1600

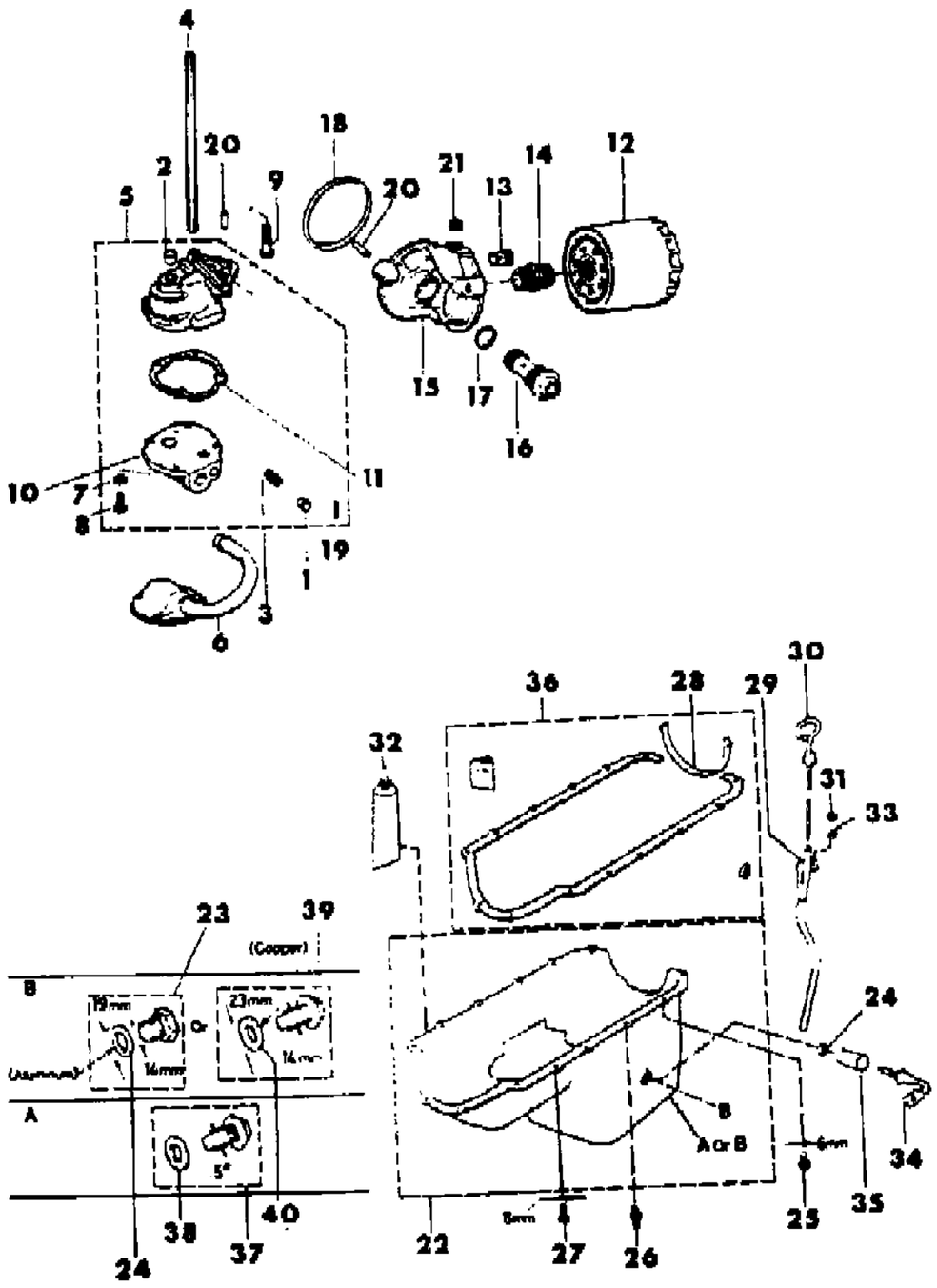

ITEM	PART NUMBER	QTY	BODY	MODEL	DESCRIPTION
1	8350 0820	1			VALVE
2	8350 0821	1			PLUG
3	8350 0822	1			SPRING
4	8350 0823	1			SHAFT, Oil Pump Gear
5					PUMP, Engine Oil
	8350 0826	1			1984
	8350 1486	1			1985-86
6	3300 1470	1			TUBE, Oil Pump Inlet
7	S943 9510	4			WASHER
8	S150 3880	4			SCREW
9	S047 7235	1			BOLT
10	8350 0830	1			COVER, Engine Oil Pump
11	8350 0831	1			GASKET
12	J813 2313	1			FILTER, Engine Oil
13	8350 0835	1			VALVE
14	5300 0771	1			CONNECTOR, Oil Filter
15	8350 0836	1			ADAPTER, Oil Filter
16	8350 0837	1			BOLT
17	8350 0838	1			SEAL
18	8350 0839	1			GASKET
19	8350 0846	1			PIN
20	S150 3504	2			PIN
21	8350 0733	1			PLUG
22					PAN, Engine Oil
	5300 0360	1			1984
	5300 1840	1			1985-86
23	8350 0271	2			PLUG, Package, 1984, 14mm
24	3300 0322	2			GASKET, Aluminum, 1984, 19mm
25	S150 8247	9			BOLT
26	8350 0814	3			STUD
27	S150 2670	2			BOLT
28					SEAL
	8350 0816	1			1984
	8350 1898	1			1985-86
29	8350 0819	1			TUBE, Engine Oil Indicator
30					INDICATOR, Engine Oil Level
	5300 0759	1			1984
	5300 2339	1			1985-86
31	8350 0845	1			NUT

MODEL CODES

16=Cherokee 2 Dr.(1981-83)
17=Cherokee 2 Dr.(1981-83)
73=Cherokee 2WD-2 Dr.(1984-86)
74=Cherokee 2WD-4 Dr.(1984-86)
18=Cherokee 4 Dr.(1981-83)
77=Cherokee 4WD-2 Dr.(1984-86)
78=Cherokee 4WD-4 Dr.(1984-86)
85=CJ-5 (1981-83)
86=CJ-6(1981)
87=CJ-7(1981-86)
88=CJ-8, Scrambler(1981-86)
64=Comanche 2WD-6 Ft. Box(1986)
66=Comanche 2WD-7 Ft. Box(1986)
63=Comanche 4WD-6 Ft. Box(1986)
65=Comanche 4WD-7 Ft. Box(1986)
15=Grand Wagoneer 4 Dr.(1984-86)
25=J-10 Truck 7 Ft. Box(1981-84)
26=J10 Truck 8 Ft. Box(1981-86)
27=J-20 Truck 8 Ft. Box(1981-86)
15=Wagoneer 4 Dr.(1981-83)
75=Wagoneer 4WD-4 Dr.(1984-86)

BODY
CJ=CJ-5, CJ-6, CJ-7, CJ-8, Scrambler(1981-86)
MJ=Comanche Pickup(1986)

STYLES
SJ=Wagoneer(1981-83), Grand Wagoneer(1984-86), Cherokee(1981-83), J-10, J-20(1981-86)
XJ=Wagoneer(1984-86), Cherokee(1984-86)

AR = Use as Required - = Non Illustrated Part P.A.R. = Paint as Required

« RETURN TO GROUP INDEX »

81J56 1600

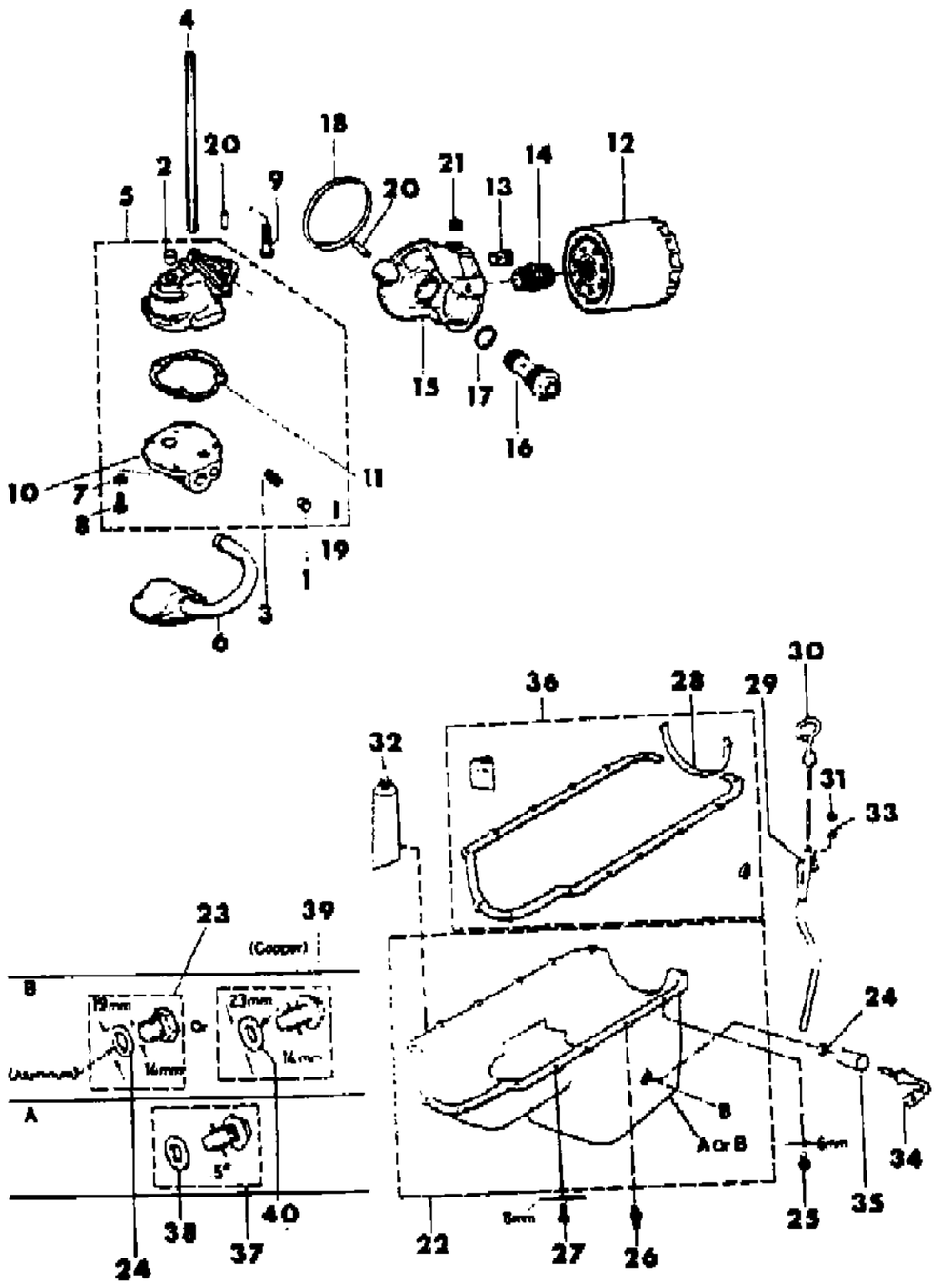

ITEM	PART NUMBER	QTY	BODY	MODEL	DESCRIPTION
32	J899 3317	1			SEALER ***
33	J012 0386	1			WASHER
34	5300 0376	1			SENSOR, Engine Oil Level
35	J324 2446	1			SHIELD, Oil Level Sensor
36	8350 0853	1			GASKET PACKAGE
37	8350 1865	1			PLUG PACKAGE, (.5")
38	8350 1866	1			GASKET
39	8350 1425	2			PLUG PACKAGE, 1985-86, 14mm
40	J324 3136	2			GASKET, Copper, 1985-86, 23mm

MODEL CODES
16=Cherokee 2 Dr.(1981-83)
17=Cherokee 2 Dr.(1981-83)
73=Cherokee 2WD-2 Dr.(1984-86)
74=Cherokee 2WD-4 Dr.(1984-86)
18=Cherokee 4 Dr.(1981-83)
77=Cherokee 4WD-2 Dr.(1984-86)
78=Cherokee 4WD-4 Dr.(1984-86)
85=CJ-5 (1981-83)
86=CJ-6(1981)
87=CJ-7(1981-86)
88=CJ-8, Scrambler(1981-86)
64=Comanche 2WD-6 Ft. Box(1986)
66=Comanche 2WD-7 Ft. Box(1986)
63=Comanche 4WD-6 Ft. Box(1986)
65=Comanche 4WD-7 Ft. Box(1986)
15=Grand Wagoneer 4 Dr.(1984-86)
25=J-10 Truck 7 Ft. Box(1981-84)
26=J10 Truck 8 Ft. Box(1981-86)
27=J-20 Truck 8 Ft. Box(1981-86)
15=Wagoneer 4 Dr.(1981-83)
75=Wagoneer 4WD-4 Dr.(1984-86)

BODY
CJ=CJ-5, CJ-6, CJ-7, CJ-8, Scrambler(1981-86)
MJ=Comanche Pickup(1986)

STYLES
SJ=Wagoneer(1981-83), Grand Wagoneer(1984-86), Cherokee(1981-83), J-10, J-20(1981-86)
XJ=Wagoneer(1984-86), Cherokee(1984-86)

AR = Use as Required - = Non Illustrated Part P.A.R. = Paint as Required

MANIFOLD, INTAKE AND EXHAUST XJ CHEROKEE, XJ WAGONEER COMANCHE
Figure 9B-1700

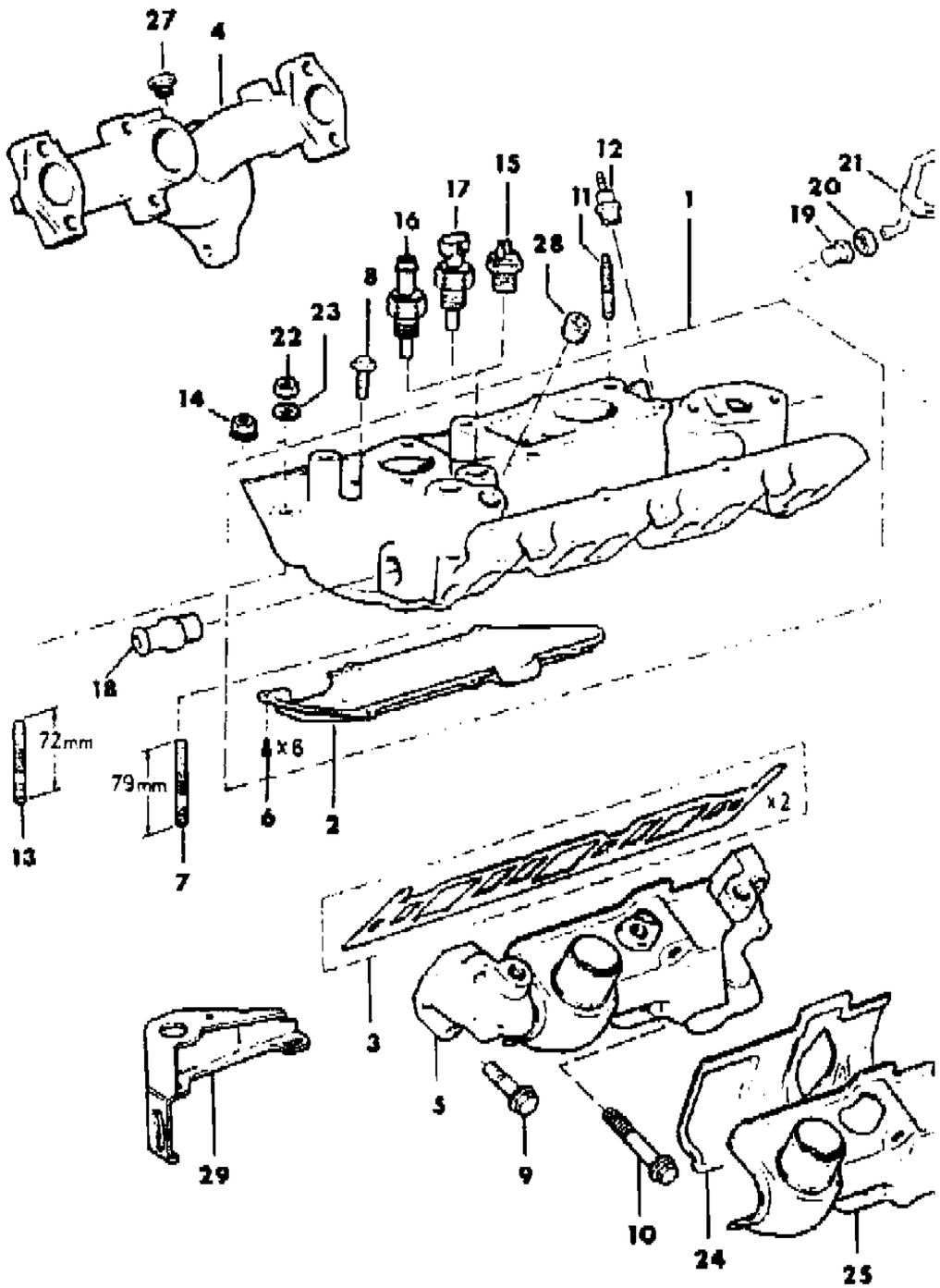

ITEM	PART NUMBER	QTY	BODY	MODEL	DESCRIPTION
1	8350 0829	1			MANIFOLD, Intake
2	8350 0840	1			GUARD, Oil Splash
3	8350 3187	1			GASKET PACKAGE
4	8350 0798	1			MANIFOLD, Exhaust, Right
5					MANIFOLD, Exhaust, Left
	8350 0794	1			1984-86: US 49 States; CANADA; Export, Without Japan
	8350 0793	1			1984-86: US California; Japan
6	8350 0802	6			SCREW
7	8350 0811	2			STUD
8	8350 0817	6			SCREW
9	8350 0825	8			BOLT
10	8350 0818	4			BOLT
11	8350 0851	4			STUD
12	5300 0961	1			FITTING, Vacuum ***
13	8350 0827	2			STUD
14	8350 0803	4			NUT, 1984: US; CANADA; EXPORT; Japan
15	8350 0809	1			SWITCH, Early Fuel Evaporation, 1984-86: US 49 States; CANADA; EXPORT; Japan
16	8350 0852	1			SWITCH, Early Fuel Evaporation, 1984: US-California; Japan
17	8350 2327	1			SWITCH, Early Fuel Evaporation, 1985-86: US-California; Japan
18	8350 0777	1			NIPPLE
19	8350 0881	1			ADAPTER, Vacuum Tube
20	S150 7036	1			NUT
21	8350 0882	1			TUBE, Vacuum
22	S150 1059	4			NUT, 1985-86: US; CANADA; EXPORT; Japan
23	J012 0386	4			WASHER, 1985-86: US; CANADA; EXPORT; Japan
24	8350 0868	1			SHROUD, Exhaust Manifold Inner ***
25	8350 0867	1			SHROUD, Exhaust Manifold Outer ***
26	J400 4515	AR			RIVET
27	J420 0413	1			PLUG
28	8350 0734	1			PLUG
29	8350 0704	1			BRACKET

MODEL CODES

16=Cherokee 2 Dr.(1981-83)
17=Cherokee 2 Dr.(1981-83)
73=Cherokee 2WD-2 Dr.(1984-86)
74=Cherokee 2WD-4 Dr.(1984-86)
18=Cherokee 4 Dr.(1981-83)
77=Cherokee 4WD-2 Dr.(1984-86)
78=Cherokee 4WD-4 Dr.(1984-86)
85=CJ-5 (1981-83)
86=CJ-6(1981)
87=CJ-7(1981-86)
88=CJ-8, Scrambler(1981-86)
64=Comanche 2WD-6 Ft. Box(1986)
66=Comanche 2WD-7 Ft. Box(1986)
63=Comanche 4WD-6 Ft. Box(1986)
65=Comanche 4WD-7 Ft. Box(1986)
15=Grand Wagoneer 4 Dr.(1984-86)
25=J-10 Truck 7 Ft. Box(1981-84)
26=J10 Truck 8 Ft. Box(1981-86)
27=J-20 Truck 8 Ft. Box(1981-86)
15=Wagoneer 4 Dr.(1981-83)
75=Wagoneer 4WD-4 Dr.(1984-86)

BODY
CJ=CJ-5, CJ-6, CJ-7, CJ-8, Scrambler(1981-86)
MJ=Comanche Pickup(1986)

STYLES
SJ=Wagoneer(1981-83), Grand Wagoneer(1984-86), Cherokee(1981-83), J-10, J-20(1981-86)
XJ=Wagoneer(1984-86), Cherokee(1984-86)

AR = Use as Required - = Non Illustrated Part P.A.R. = Paint as Required

« RETURN TO GROUP INDEX

ENGINE MOUNTING XJ CHEROKEE, XJ WAGONEER COMANCHE
Figure 9B-1800

81J56 1800

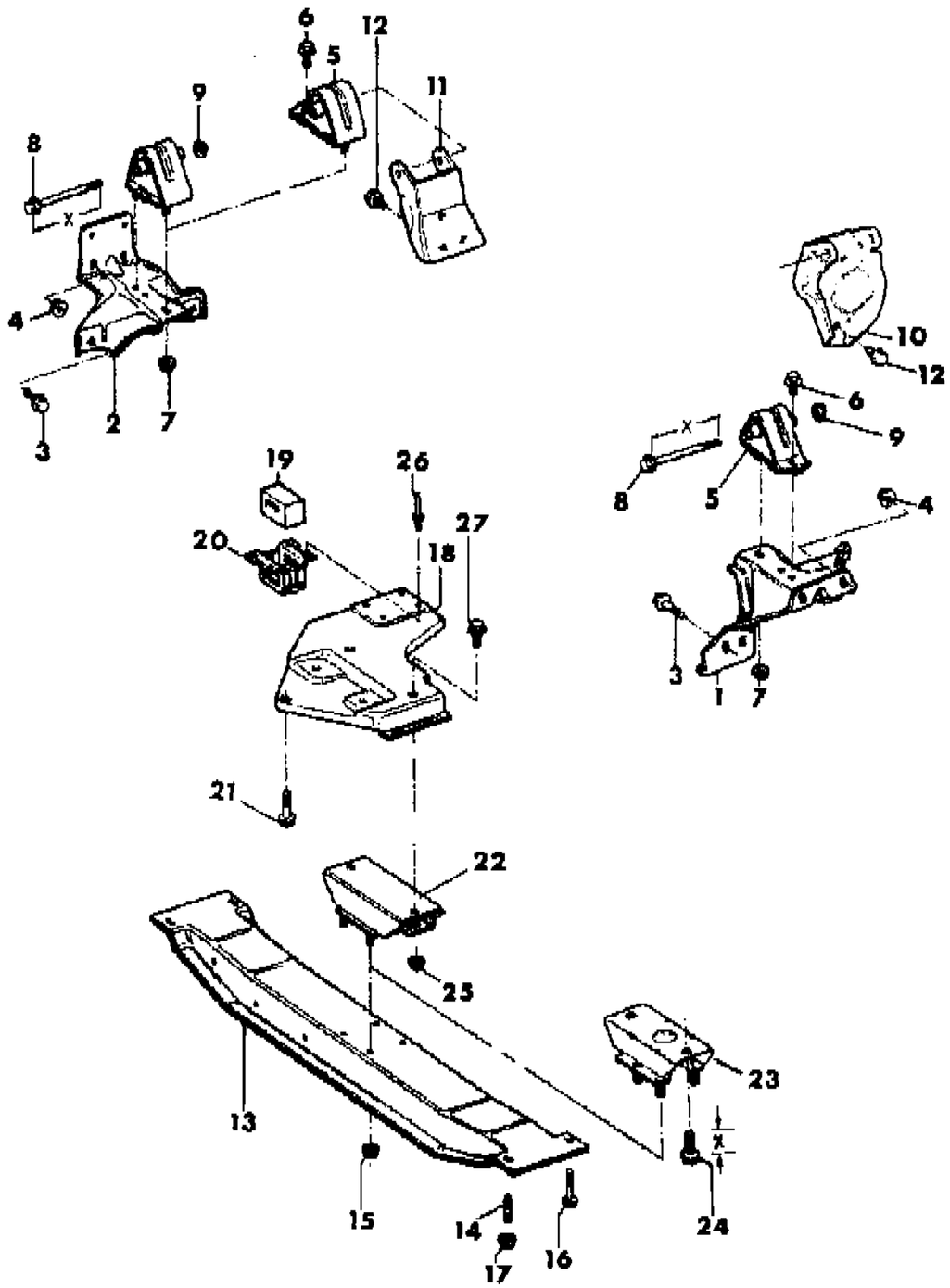

ITEM	PART NUMBER	QTY	BODY	MODEL	DESCRIPTION
1					BRACKET, Engine, Left
	5200 2291	1			1984-85
	5200 3005	1			1986
2	5200 0572	1			BRACKET, Engine, Left
3					BOLT
	3420 1559	5			1984-85
	3420 2037	5			1986
4	3420 1416	4			NUT
5	5200 0141	2			MOUNT, Engine ***
6	3420 1559	2			BOLT
7	3420 1828	2			NUT
8	3420 1811	2			BOLT, X=110mm
9	1150 2813	2			NUT
10	5200 1005	1			BRACKET, Engine, Left
11	5200 1004	1			BRACKET, Engine, Right
12	J420 0434	6			BOLT
13					CROSSMEMBER, Transmission Support
	5200 0345	1			1984-85
	5200 1308	1			1986
14	3420 1710	2			STUD
15	1150 2811	4			NUT
16	3420 1540	6			BOLT
17	1150 2812	4			NUT
18					BRACKET, Transmission Support Rear
					Manual Transmission
	5200 0675	1			Four Speed Transmission Tagged 53001547 or 53001548
	5200 0675	1			Five Speed Transmission Tagged 53001551 or 53001552
	5200 1147	1			Four Speed Transmission Tagged 53001565
	5200 1147	1			Five Speed Transmission Tagged 53001566
	5200 1505	1			Five Speed Transmission Tagged 53001190
					Automatic Transmission
	5200 1754	1			Two Wheel Drive
	5200 1017	1			Four Wheel Drive
19	5300 0101	1			INSULATOR
20	5300 0104	1			BRACKET
21					BOLT
	J400 7155	4			Manual Transmission
					Automatic Transmission
	J400 7162	AR			1984-85

MODEL CODES

16=Cherokee 2 Dr.(1981-83)
17=Cherokee 2 Dr.(1981-83)
73=Cherokee 2WD-2 Dr.(1984-86)
74=Cherokee 2WD-4 Dr.(1984-86)
18=Cherokee 4 Dr.(1981-83)
77=Cherokee 4WD-2 Dr.(1984-86)
78=Cherokee 4WD-4 Dr.(1984-86)
85=CJ-5 (1981-83)
86=CJ-6(1981)
87=CJ-7(1981-86)
88=CJ-8, Scrambler(1981-86)
64=Comanche 2WD-6 Ft. Box(1986)
66=Comanche 2WD-7 Ft. Box(1986)
63=Comanche 4WD-6 Ft. Box(1986)
65=Comanche 4WD-7 Ft. Box(1986)
15=Grand Wagoneer 4 Dr.(1984-86)
25=J-10 Truck 7 Ft. Box(1981-84)
26=J10 Truck 8 Ft. Box(1981-86)
27=J-20 Truck 8 Ft. Box(1981-86)
15=Wagoneer 4 Dr.(1981-83)
75=Wagoneer 4WD-4 Dr.(1984-86)

BODY
CJ=CJ-5, CJ-6, CJ-7, CJ-8, Scrambler(1981-86)
MJ=Comanche Pickup(1986)

STYLES
SJ=Wagoneer(1981-83), Grand Wagoneer(1984-86), Cherokee(1981-83), J-10, J-20(1981-86)
XJ=Wagoneer(1984-86), Cherokee(1984-86)

AR = Use as Required - = Non Illustrated Part P.A.R. = Paint as Required

« RETURN TO GROUP INDEX »

ENGINE MOUNTING XJ CHEROKEE, XJ WAGONEER COMANCHE
Figure 9B-1800

81J56 1800

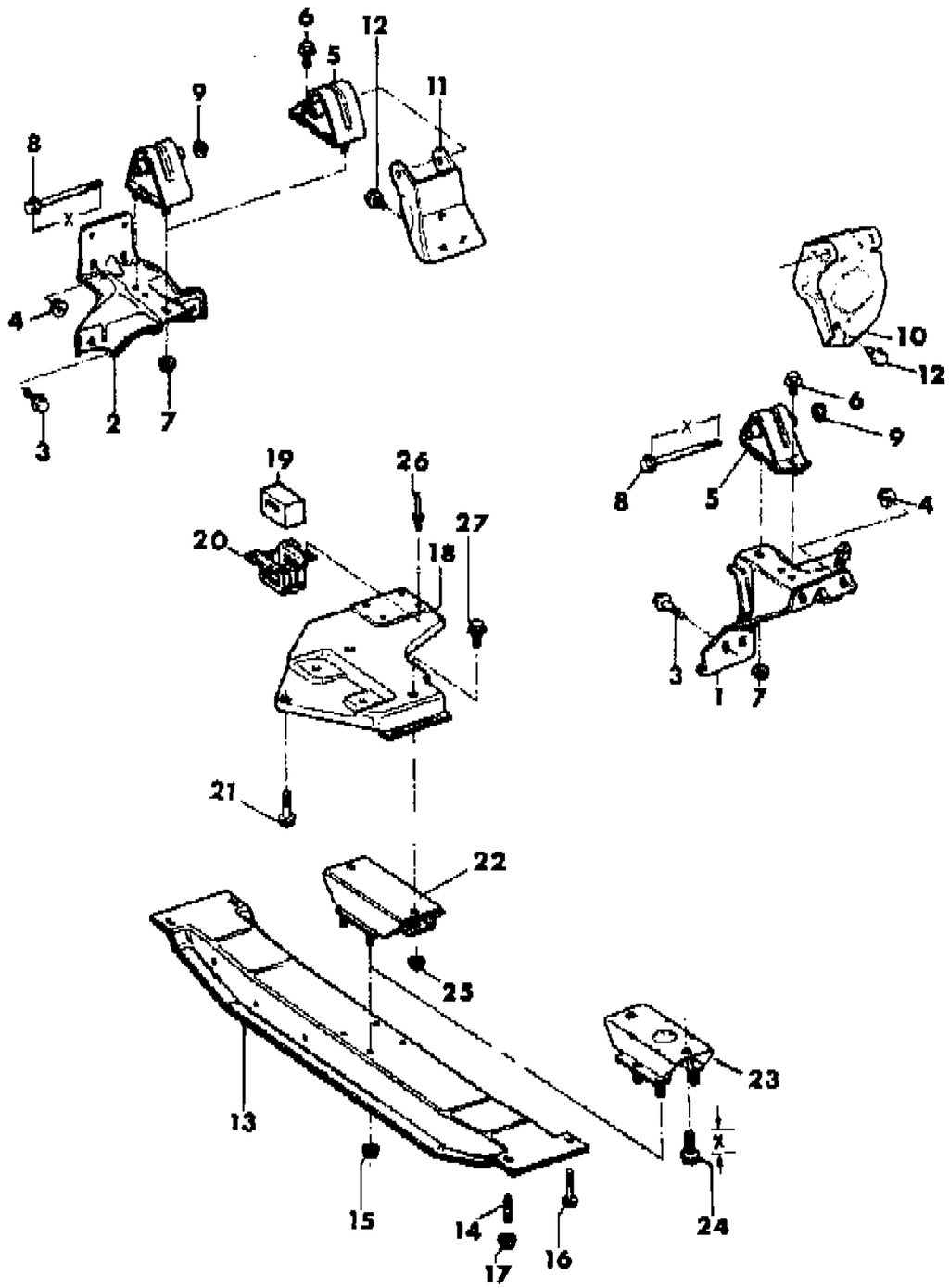

ITEM	PART NUMBER	QTY	BODY	MODEL	DESCRIPTION
	1150 3480	AR			1986
22					CUSHION, Transmission Support Rear
					Manual Transmission
	5200 1313	1			Two Wheel Drive, Blue
	5200 1180	1			Four Wheel Drive, Yellow
	5200 2334	1			Automatic Transmission, Purple
23					CUSHION, Transmission Support Rear
	5200 2334	1			Purple
	5200 0139	1			Four Wheel Drive
24	1150 3480	2			BOLT
25					NUT
	1150 2812	2			Manual Transmission
	1150 2813	2			Automatic Transmission
26					RIVET
	3420 1629	4			Manual Transmission
	3420 1980	4			Automatic Transmission
27	S150 2788	2			BOLT

MODEL CODES

16=Cherokee 2 Dr.(1981-83)	78=Cherokee 4WD-4 Dr.(1984-86)	64=Comanche 2WD-6 Ft. Box(1986)	25=J-10 Truck 7 Ft. Box(1981-84)
17=Cherokee 2 Dr.(1981-83)	85=CJ-5 (1981-83)	66=Comanche 2WD-7 Ft. Box(1986)	26=J10 Truck 8 Ft. Box(1981-86)
73=Cherokee 2WD-2 Dr.(1984-86)	86=CJ-6(1981)	63=Comanche 4WD-6 Ft. Box(1986)	27=J-20 Truck 8 Ft. Box(1981-86)
74=Cherokee 2WD-4 Dr.(1984-86)	87=CJ-7(1981-86)	65=Comanche 4WD-7 Ft. Box(1986)	15=Wagoneer 4 Dr.(1981-83)
18=Cherokee 4 Dr.(1981-83)	88=CJ-8, Scrambler(1981-86)	15=Grand Wagoneer 4 Dr.(1984-86)	75=Wagoneer 4WD-4 Dr.(1984-86)
77=Cherokee 4WD-2 Dr.(1984-86)			

BODY
CJ=CJ-5, CJ-6, CJ-7, CJ-8, Scrambler(1981-86)
MJ=Comanche Pickup(1986)

STYLES
SJ=Wagoneer(1981-83), Grand Wagoneer(1984-86), Cherokee(1981-83), J-10, J-20(1981-86)
XJ=Wagoneer(1984-86), Cherokee(1984-86)

AR = Use as Required - = Non Illustrated Part P.A.R. = Paint as Required

« RETURN TO GROUP INDEX

ENGINE, SIX CYLINDER SJ CHEROKEE, SJ WAGONEER J10
Figure 9B-1900

81J56 1900

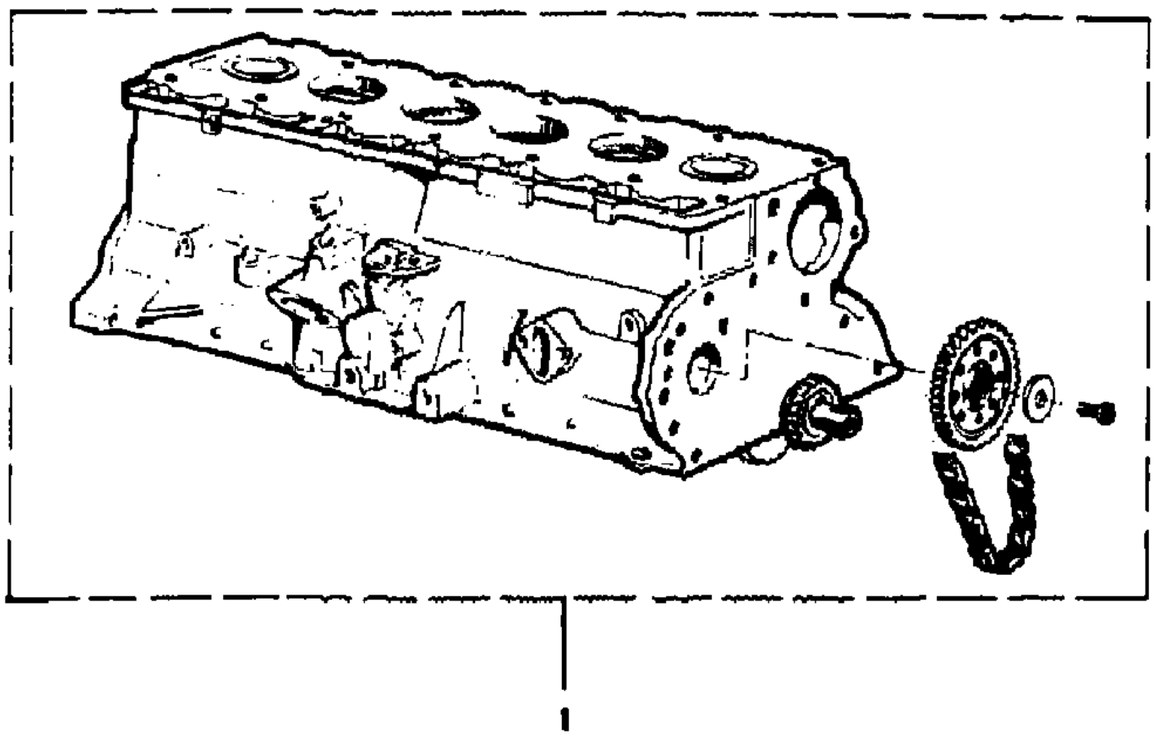

ITEM	PART NUMBER	QTY	BODY	MODEL	DESCRIPTION
1					ENGINE, Short, Without Camshaft
	J813 3000	1			1981
	J813 3835	1			1982
	J813 4599	1			1983-85
	8350 2299	1			1986
	J813 4500	1			1982-84: VAM, Built in Mexico, Engine Build Code "M"

MODEL CODES

16=Cherokee 2 Dr.(1981-83)
17=Cherokee 2 Dr.(1981-83)
73=Cherokee 2WD-2 Dr.(1984-86)
74=Cherokee 2WD-4 Dr.(1984-86)
18=Cherokee 4 Dr.(1981-83)
77=Cherokee 4WD-2 Dr.(1984-86)
78=Cherokee 4WD-4 Dr.(1984-86)
85=CJ-5 (1981-83)
86=CJ-6(1981)
87=CJ-7(1981-86)
88=CJ-8, Scrambler(1981-86)
64=Comanche 2WD-6 Ft. Box(1986)
66=Comanche 2WD-7 Ft. Box(1986)
63=Comanche 4WD-6 Ft. Box(1986)
65=Comanche 4WD-7 Ft. Box(1986)
15=Grand Wagoneer 4 Dr.(1984-86)
25=J-10 Truck 7 Ft. Box(1981-84)
26=J10 Truck 8 Ft. Box(1981-86)
27=J-20 Truck 8 Ft. Box(1981-86)
15=Wagoneer 4 Dr.(1981-83)
75=Wagoneer 4WD-4 Dr.(1984-86)

BODY

CJ=CJ-5, CJ-6, CJ-7, CJ-8, Scrambler(1981-86)
MJ=Comanche Pickup(1986)

STYLES

SJ=Wagoneer(1981-83), Grand Wagoneer(1984-86), Cherokee(1981-83), J-10, J-20(1981-86)
XJ=Wagoneer(1984-86), Cherokee(1984-86)

AR = Use as Required - = Non Illustrated Part P.A.R. = Paint as Required

« RETURN TO GROUP INDEX

ENGINE, SIX CYLINDER SJ CHEROKEE, SJ WAGONEER J10
Figure 9B-1900

81J56 2000

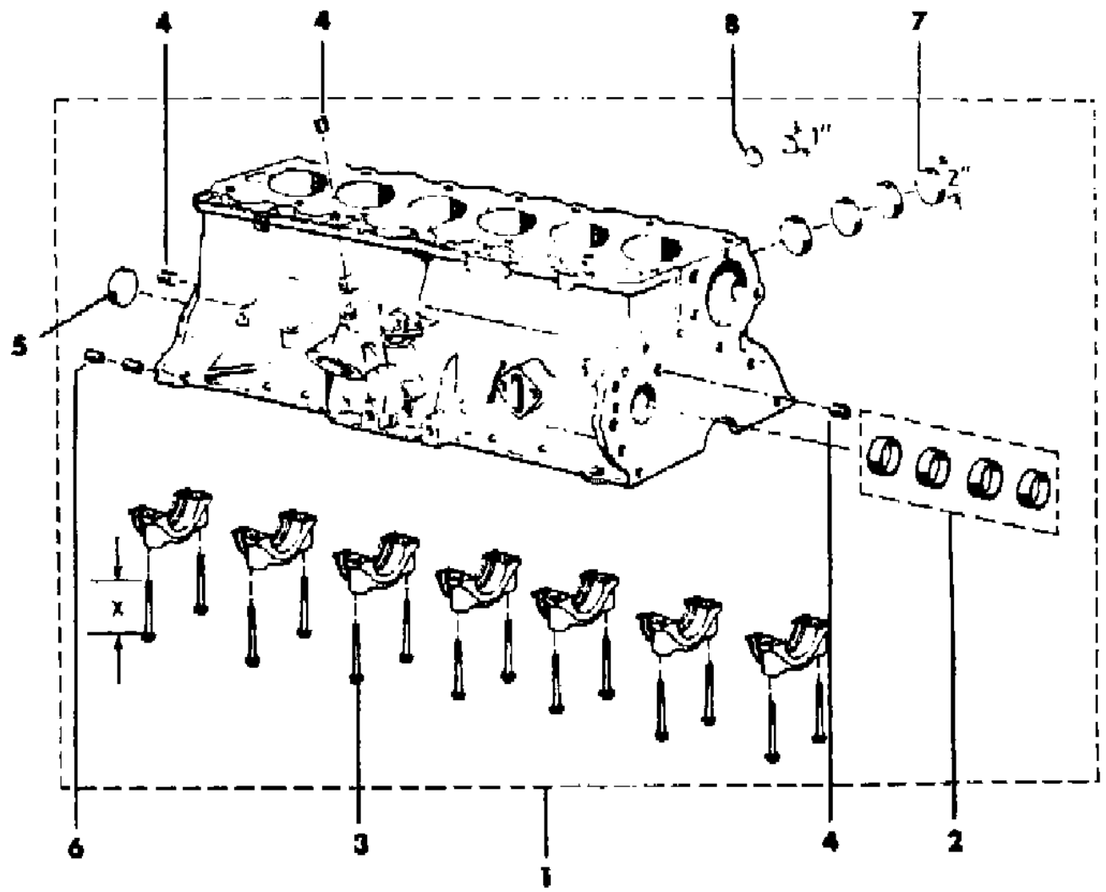

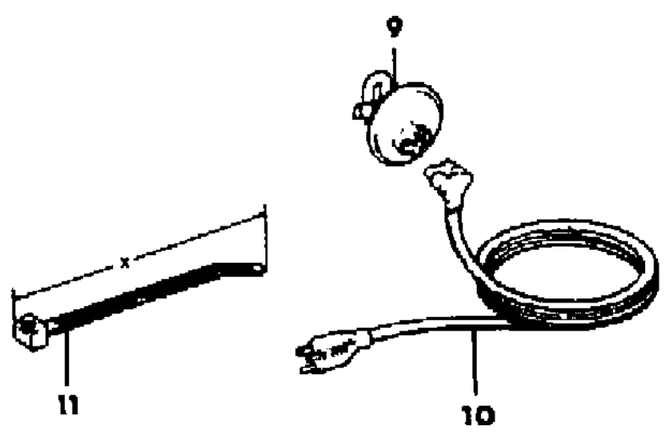

ITEM	PART NUMBER	QTY	BODY	MODEL	DESCRIPTION
1					BLOCK, Engine ***
	J813 3001	1			1981
	J813 3837	1			1982-85
	J813 4501	1			1982-85, VAM, Built in Mexico, Engine Build Code "M"
	8350 3327	1			1986
2					BEARING PACKAGE ***
	J320 5711	1			Standard
	J320 8985	1			+.010"
3					BOLT
	J400 6591	14			1981: (2.75")
	J400 6948	14			1981: (2.87")
	J400 6948	14			1982-86: (2.87")
4	J044 4660	3			PLUG
5	J317 2313	1			PLUG
6	J400 5148	2			PIN
7	J310 5394	4			PLUG
8	J317 8449	2			PLUG
9	5300 5197	1			HEATER, Engine Block
10	J324 2324	1			CORD, Power Supply
11					Strap, Tie ***
	J322 3227	AR			200mm
	J369 3058	AR			300mm
	J323 0270	AR			350mm
	J323 5187	AR			450mm

MODEL CODES

16=Cherokee 2 Dr.(1981-83)
17=Cherokee 2 Dr.(1981-83)
73=Cherokee 2WD-2 Dr.(1984-86)
74=Cherokee 2WD-4 Dr.(1984-86)
18=Cherokee 4 Dr.(1981-83)
77=Cherokee 4WD-2 Dr.(1984-86)
78=Cherokee 4WD-4 Dr.(1984-86)
85=CJ-5 (1981-83)
86=CJ-6(1981)
87=CJ-7(1981-86)
88=CJ-8, Scrambler(1981-86)
64=Comanche 2WD-6 Ft. Box(1986)
66=Comanche 2WD-7 Ft. Box(1986)
63=Comanche 4WD-6 Ft. Box(1986)
65=Comanche 4WD-7 Ft. Box(1986)
15=Grand Wagoneer 4 Dr.(1984-86)
25=J-10 Truck 7 Ft. Box(1981-84)
26=J10 Truck 8 Ft. Box(1981-86)
27=J-20 Truck 8 Ft. Box(1981-86)
15=Wagoneer 4 Dr.(1981-83)
75=Wagoneer 4WD-4 Dr.(1984-86)

BODY
CJ=CJ-5, CJ-6, CJ-7, CJ-8, Scrambler(1981-86)
MJ=Comanche Pickup(1986)

STYLES
SJ=Wagoneer(1981-83), Grand Wagoneer(1984-86), Cherokee(1981-83), J-10, J-20(1981-86)
XJ=Wagoneer(1984-86), Cherokee(1984-86)

AR = Use as Required - = Non Illustrated Part P.A.R. = Paint as Required

« RETURN TO GROUP INDEX

GASKET SET SJ CHEROKEE, SJ WAGONEER J10
Figure 9B-2100

81J56 2100

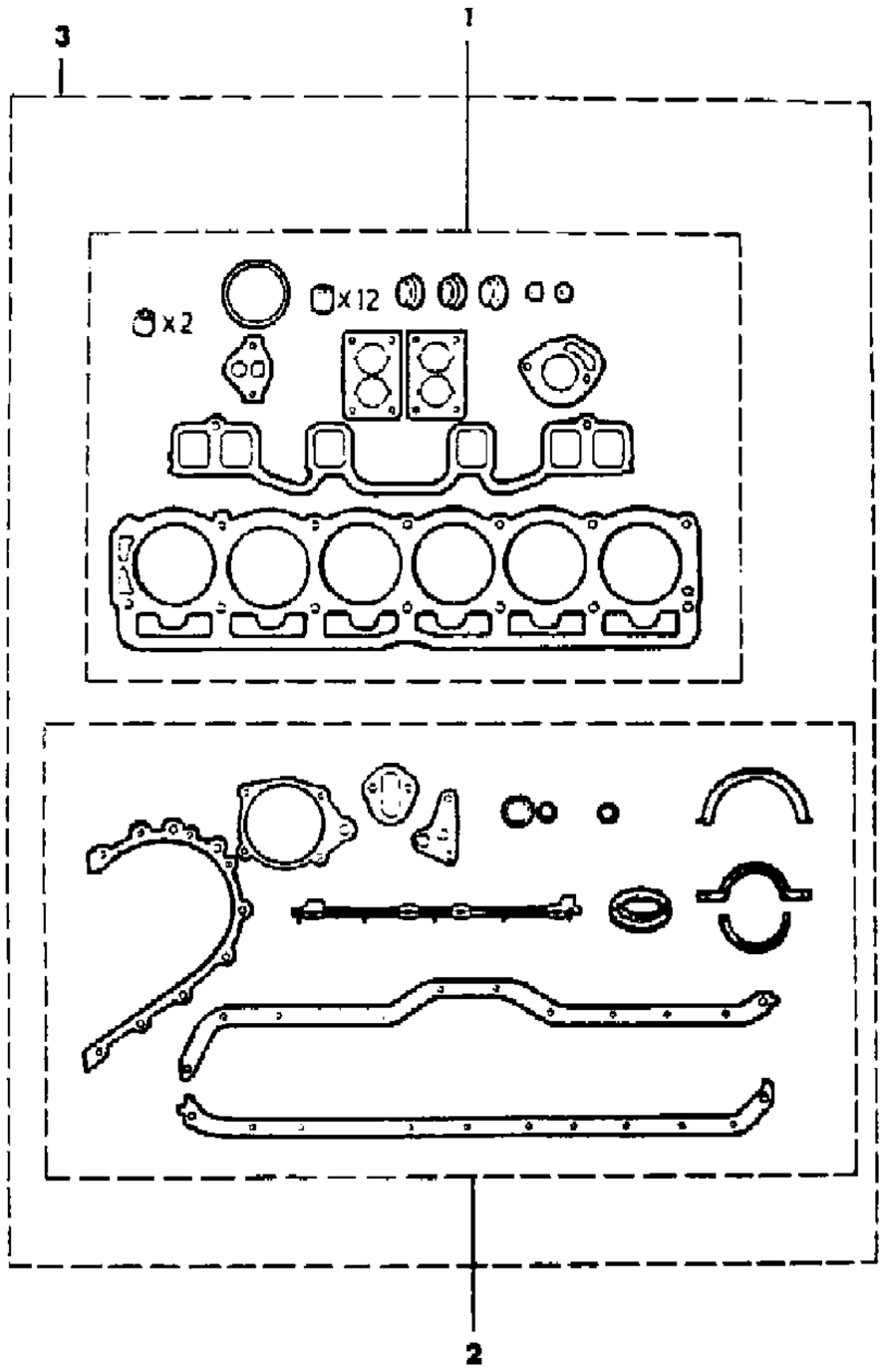

ITEM	PART NUMBER	QTY	BODY	MODEL	DESCRIPTION
1					GASKET PACKAGE, Engine Upper
	J813 3352	1			1981-85
	8350 2384	1			1986
2	8350 5389	1			GASKET PACKAGE, Engine Lower
3	J813 4550	1			GASKET PACKAGE, Engine Overhaul, VAM; Built in Mexico, Engine Build Code "M"

MODEL CODES

16=Cherokee 2 Dr.(1981-83)
17=Cherokee 2 Dr.(1981-83)
73=Cherokee 2WD-2 Dr.(1984-86)
74=Cherokee 2WD-4 Dr.(1984-86)
18=Cherokee 4 Dr.(1981-83)
77=Cherokee 4WD-2 Dr.(1984-86)
78=Cherokee 4WD-4 Dr.(1984-86)
85=CJ-5 (1981-83)
86=CJ-6(1981)
87=CJ-7(1981-86)
88=CJ-8, Scrambler(1981-86)
64=Comanche 2WD-6 Ft. Box(1986)
66=Comanche 2WD-7 Ft. Box(1986)
63=Comanche 4WD-6 Ft. Box(1986)
65=Comanche 4WD-7 Ft. Box(1986)
15=Grand Wagoneer 4 Dr.(1984-86)
25=J-10 Truck 7 Ft. Box(1981-84)
26=J10 Truck 8 Ft. Box(1981-86)
27=J-20 Truck 8 Ft. Box(1981-86)
15=Wagoneer 4 Dr.(1981-83)
75=Wagoneer 4WD-4 Dr.(1984-86)

BODY

CJ=CJ-5, CJ-6, CJ-7, CJ-8, Scrambler(1981-86)
MJ=Comanche Pickup(1986)

STYLES

SJ=Wagoneer(1981-83), Grand Wagoneer(1984-86), Cherokee(1981-83), J-10, J-20(1981-86)
XJ=Wagoneer(1984-86), Cherokee(1984-86)

AR = Use as Required - = Non Illustrated Part P.A.R. = Paint as Required

« RETURN TO GROUP INDEX

CYLINDER HEAD SJ CHEROKEE, SJ WAGONEER J10
Figure 9B-2200

81J56 2200

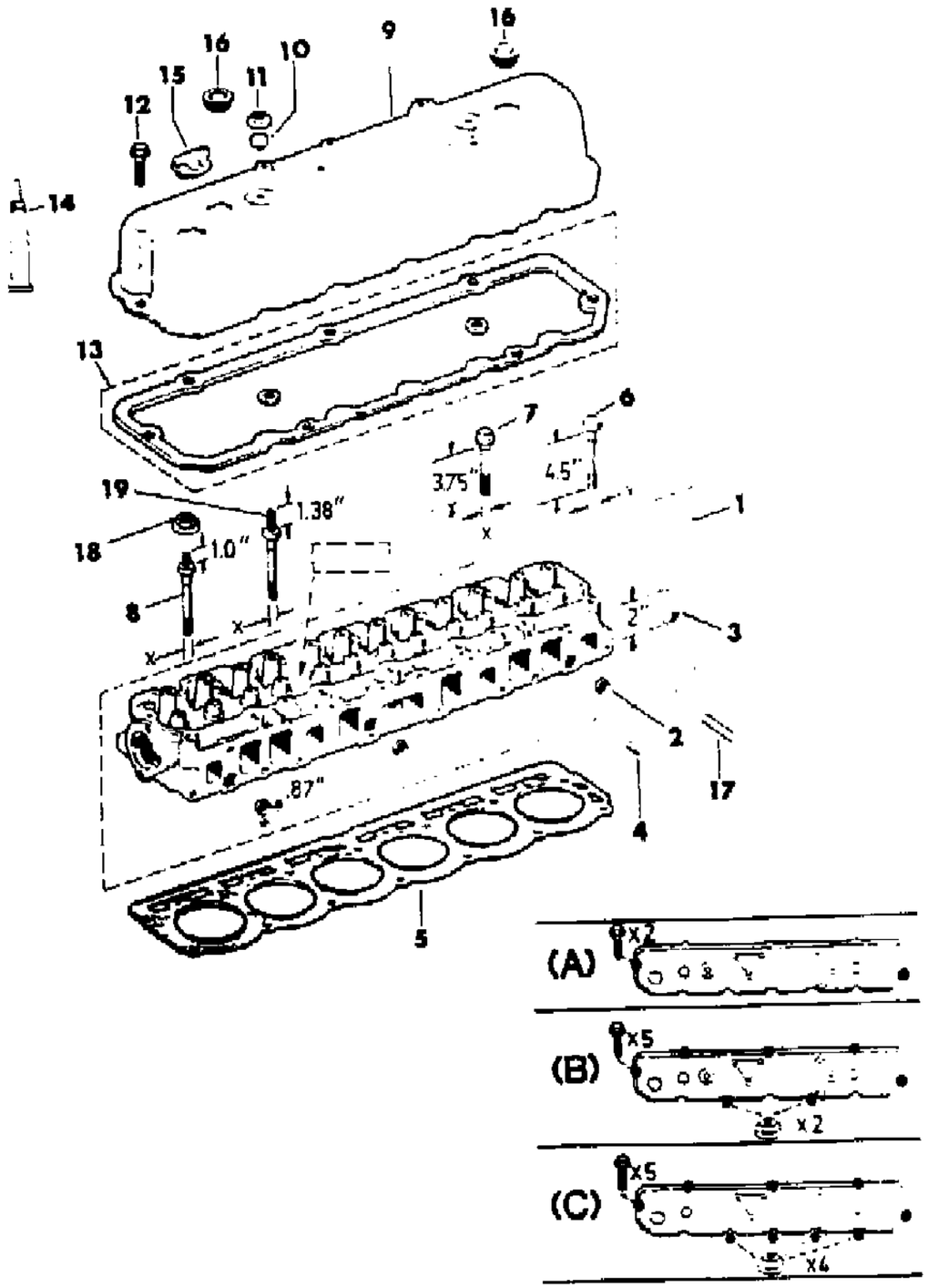

ITEM	PART NUMBER	QTY	BODY	MODEL	DESCRIPTION
1					HEAD, Engine Cylinder
	J813 3010	1			1981
	J813 3892	1			1982
	J813 4764	1			1983-84: A, Coded "591" or "715"
	8350 1395	1			1984-85: B, Coded "591" or "715"
	8350 2372	1			1986: Coded "591" or "715"
	J813 4765	1			1983-84: A, EXPORT, Coded "593" or "721"
	8350 1396	1			1984-85: B, EXPORT, Coded "593" or "721"
	8350 2373	1			1986: EXPORT, Coded "593" or "721"
	J813 4505	1			1982-84: A, VAM, Built in Mexico, Engine Built Code "M"
	8350 1899	1			1984: B, VAM, Built in Mexico, Engine Build Code "M"
2	J317 2319	3			PLUG
3	J310 5394	1			PLUG
4	J317 2318	2			PIN
5					GASKET
	J322 8469	1			Without VAM
	J813 4538	1			VAM, Built iin Mexico, Engine Build Code "M"
6					BOLT
	J400 6592	3			7/16"
	J400 7307	2			1/2"
7					BOLT
	J400 6593	7			7/16"
	J400 7308	7			1/2"
8					BOLT, Stud
	J400 6595	AR			1981-82: (7/16")
	J400 6955	AR			1983-85: (7/16")
	J400 7310	AR			1986: 1/2"
9					COVER, Cylinder Head
	J323 7808	1			A
	3300 2393	1			B
	3300 3691	1			C
10	J323 7837	2			SEAL, A,B
11	J400 6926	2			NUT, A,B
12					BOLT
	S943 2476	2			A
	S943 2476	5			B
	J400 7435	5			C
13	J805 3050	1			GASKET PACKAGE
14	J899 3317	1			SEALER ***

MODEL CODES

16=Cherokee 2 Dr.(1981-83)
17=Cherokee 2 Dr.(1981-83)
73=Cherokee 2WD-2 Dr.(1984-86)
74=Cherokee 2WD-4 Dr.(1984-86)
18=Cherokee 4 Dr.(1981-83)
77=Cherokee 4WD-2 Dr.(1984-86)
78=Cherokee 4WD-4 Dr.(1984-86)
85=CJ-5 (1981-83)
86=CJ-6(1981)
87=CJ-7(1981-86)
88=CJ-8, Scrambler(1981-86)
64=Comanche 2WD-6 Ft. Box(1986)
66=Comanche 2WD-7 Ft. Box(1986)
63=Comanche 4WD-6 Ft. Box(1986)
65=Comanche 4WD-7 Ft. Box(1986)
15=Grand Wagoneer 4 Dr.(1984-86)
25=J-10 Truck 7 Ft. Box(1981-84)
26=J10 Truck 8 Ft. Box(1981-86)
27=J-20 Truck 8 Ft. Box(1981-86)
15=Wagoneer 4 Dr.(1981-83)
75=Wagoneer 4WD-4 Dr.(1984-86)

BODY
CJ=CJ-5, CJ-6, CJ-7, CJ-8, Scrambler(1981-86)
MJ=Comanche Pickup(1986)

STYLES
SJ=Wagoneer(1981-83), Grand Wagoneer(1984-86), Cherokee(1981-83), J-10, J-20(1981-86)
XJ=Wagoneer(1984-86), Cherokee(1984-86)

AR = Use as Required - = Non Illustrated Part P.A.R. = Paint as Required

CYLINDER HEAD SJ CHEROKEE, SJ WAGONEER J10
Figure 9B-2200

81J56 2200

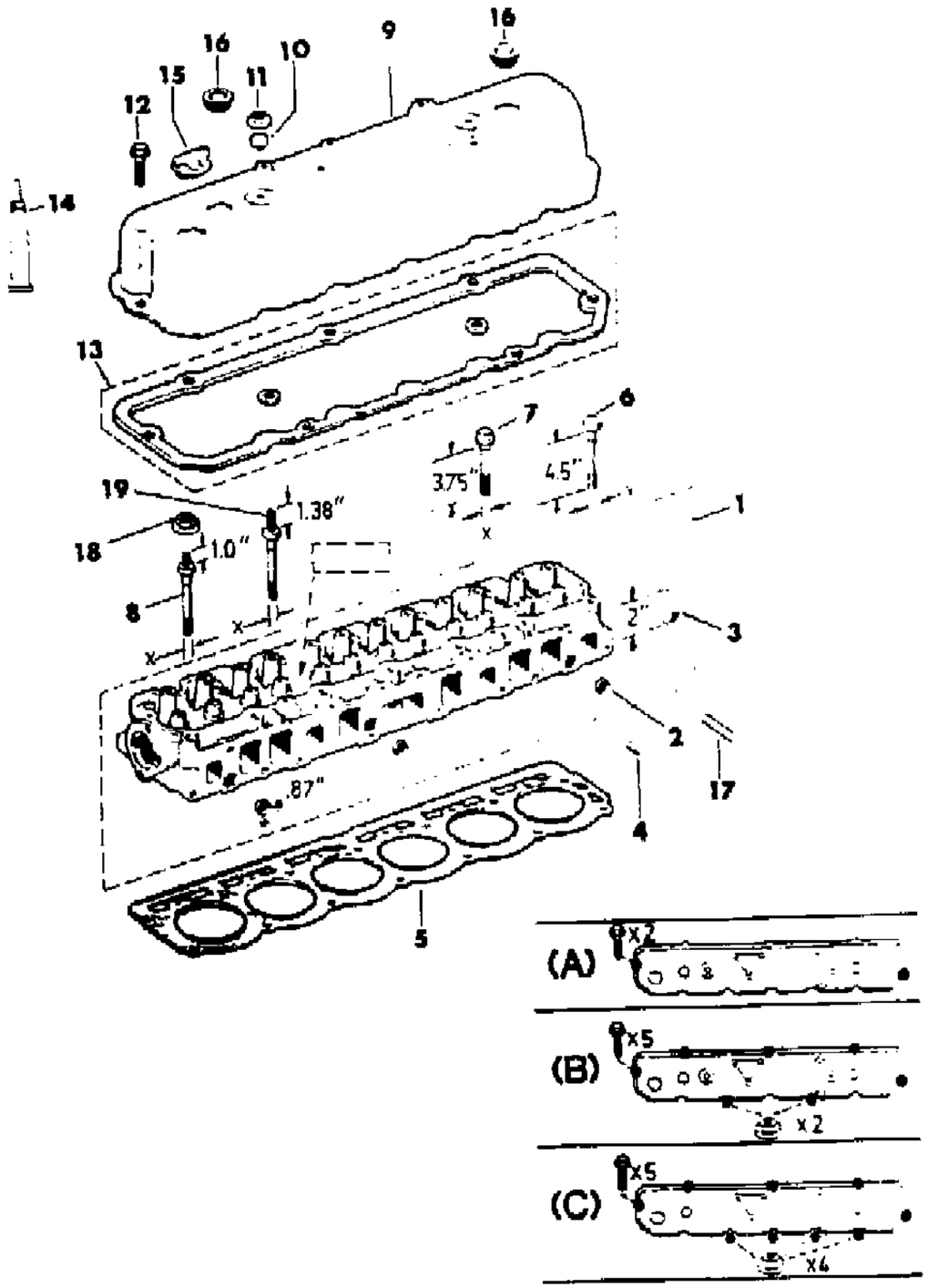

ITEM	PART NUMBER	QTY	BODY	MODEL	DESCRIPTION
15	3300 1016	1			CAP
16	J323 7765	2			GROMMET
17	J400 3917	2			STUD
18					NUT, Retainer
	J400 7199	2			B
	8350 2989	4			C
19					BOLT, Stud
	J400 7300	AR			1984-85: (7/16")
	J400 7311	AR			1986: (1/2")

MODEL CODES

16=Cherokee 2 Dr.(1981-83)
17=Cherokee 2 Dr.(1981-83)
73=Cherokee 2WD-2 Dr.(1984-86)
74=Cherokee 2WD-4 Dr.(1984-86)
18=Cherokee 4 Dr.(1981-83)
77=Cherokee 4WD-2 Dr.(1984-86)
78=Cherokee 4WD-4 Dr.(1984-86)
85=CJ-5 (1981-83)
86=CJ-6(1981)
87=CJ-7(1981-86)
88=CJ-8, Scrambler(1981-86)
64=Comanche 2WD-6 Ft. Box(1986)
66=Comanche 2WD-7 Ft. Box(1986)
63=Comanche 4WD-6 Ft. Box(1986)
65=Comanche 4WD-7 Ft. Box(1986)
15=Grand Wagoneer 4 Dr.(1984-86)
25=J-10 Truck 7 Ft. Box(1981-84)
26=J10 Truck 8 Ft. Box(1981-86)
27=J-20 Truck 8 Ft. Box(1981-86)
15=Wagoneer 4 Dr.(1981-83)
75=Wagoneer 4WD-4 Dr.(1984-86)

BODY
CJ=CJ-5, CJ-6, CJ-7, CJ-8, Scrambler(1981-86)
MJ=Comanche Pickup(1986)

STYLES
SJ=Wagoneer(1981-83), Grand Wagoneer(1984-86), Cherokee(1981-83), J-10, J-20(1981-86)
XJ=Wagoneer(1984-86), Cherokee(1984-86)

AR = Use as Required - = Non Illustrated Part P.A.R. = Paint as Required

CRANKSHAFT, FLYWHEEL AND PISTON SJ CHEROKEE, SJ WAGONEER J10
Figure 9B-2300

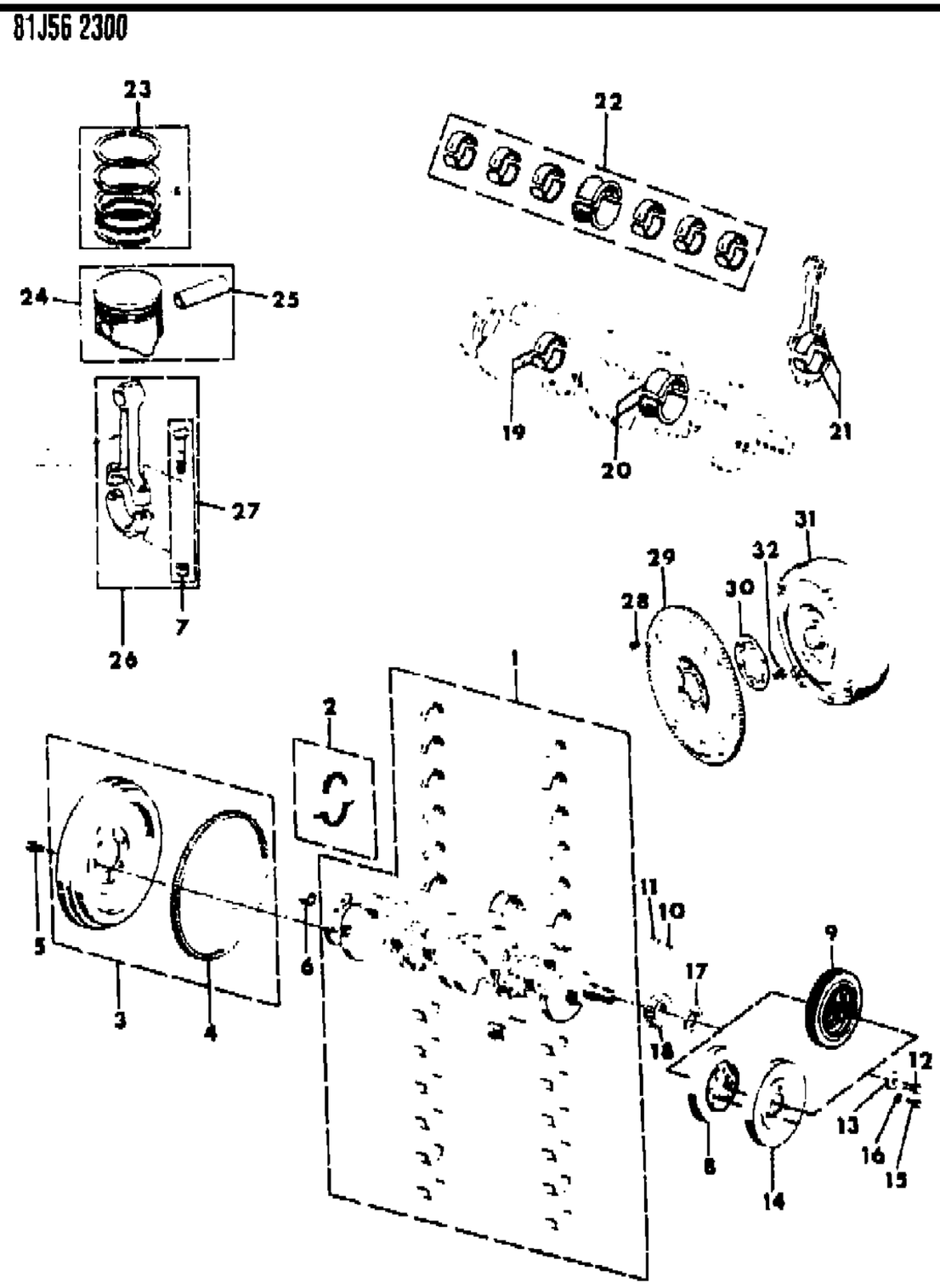

ITEM	PART NUMBER	QTY	BODY	MODEL	DESCRIPTION
1	J813 3008	1			CRANKSHAFT PACKAGE ***
2	J320 5331	1			SEAL PACKAGE
3					FLYWHEEL, With Manual Transmission ***
	J323 8635	1			1981
	J324 0094	1			1982-86
4	J317 9741	1			GEAR, Ring, With Manual Transmission
5	J317 0524	6			BOLT, With Manual Transmission
6	J323 6726	1			BEARING, Pilot, With Manual Transmission
7					NUT
	J314 9556	12			Coded "707" or "2009093"
	J400 6385	12			Coded "352" or "2027490"
8					DAMPER
	J323 7196	1			Without Serpentine Belt Drive
	J322 5201	1			VAM, Built in Mexico, Engine Build Code "M"
9	J323 7723	1			DAMPER, With Serpentine Belt Drive
10	J310 7234	1			KEY, Shaft
11	J310 7002	2			KEY, Shaft
12	S942 4033	1			BOLT
13	J812 7255	1			WASHER
14					PULLEY, Crankshaft, Without Serpertine Belt Drive
	J322 4690	1			Without Factory Installed Air Conditioning
	J323 0384	1			With Factory Installed Air Conditioning
	J813 3876	1			With Dealer Installed Air Conditioning
15	S017 9814	3			BOLT, Without Serpentine Belt Drive
16	J012 0214	3			WASHER, Without Serpentine Belt Drive
17	J317 3076	1			SLINGER, Oil ***
18	3300 4107	1			SPROCKET, Crankshaft
19					BEARING PACKAGE ***
	J813 3252	6			Standard
	J813 3680	6			-.001"
	J813 3682	6			-.002"
	J813 3254	6			-.010"
	J813 3684	6			-.012"
20					BEARING PACKAGE ***
	J813 3253	1			Standard
	J813 3681	1			-.001"
	J813 3683	1			-.002"
	J813 3255	1			-.010"
	J813 3685	1			-.012"

MODEL CODES

16=Cherokee 2 Dr.(1981-83)
17=Cherokee 2 Dr.(1981-83)
73=Cherokee 2WD-2 Dr.(1984-86)
74=Cherokee 2WD-4 Dr.(1984-86)
18=Cherokee 4 Dr.(1981-83)
77=Cherokee 4WD-2 Dr.(1984-86)
78=Cherokee 4WD-4 Dr.(1984-86)
85=CJ-5 (1981-83)
86=CJ-6(1981)
87=CJ-7(1981-86)
88=CJ-8, Scrambler(1981-86)
64=Comanche 2WD-6 Ft. Box(1986)
66=Comanche 2WD-7 Ft. Box(1986)
63=Comanche 4WD-6 Ft. Box(1986)
65=Comanche 4WD-7 Ft. Box(1986)
15=Grand Wagoneer 4 Dr.(1984-86)
25=J-10 Truck 7 Ft. Box(1981-84)
26=J10 Truck 8 Ft. Box(1981-86)
27=J-20 Truck 8 Ft. Box(1981-86)
15=Wagoneer 4 Dr.(1981-83)
75=Wagoneer 4WD-4 Dr.(1984-86)

BODY
CJ=CJ-5, CJ-6, CJ-7, CJ-8, Scrambler(1981-86)
MJ=Comanche Pickup(1986)

STYLES
SJ=Wagoneer(1981-83), Grand Wagoneer(1984-86), Cherokee(1981-83), J-10, J-20(1981-86)
XJ=Wagoneer(1984-86), Cherokee(1984-86)

AR = Use as Required - = Non Illustrated Part P.A.R. = Paint as Required

CRANKSHAFT, FLYWHEEL AND PISTON SJ CHEROKEE, SJ WAGONEER J10
Figure 9B-2300

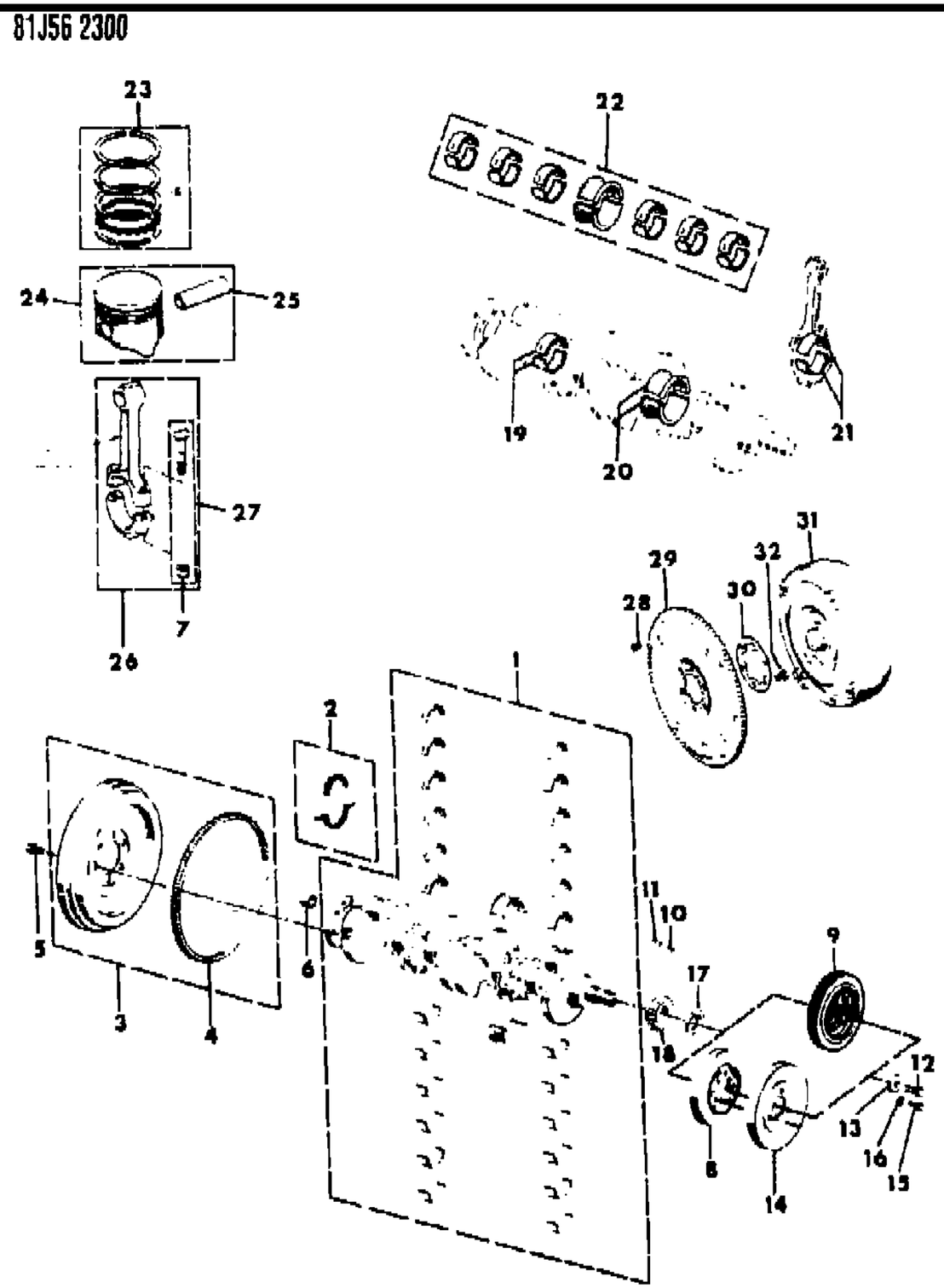

ITEM	PART NUMBER	QTY	BODY	MODEL	DESCRIPTION
21					BEARING PACKAGE ***
	J812 6204	6			Standard
	J812 6205	6			-.001"
	J812 6206	6			-.002"
	J812 6207	6			-.010"
	J812 6208	6			-.012"
					BEARING PACKAGE, VAM, Built in Mexico, Engine Build Coded "M" ***
	J813 4523	6			Standard
	J813 4524	6			-.020"
	J813 4525	6			-.030"
	J813 4526	6			-.040"
22					BEARING PACKAGE, Main, VAM, Built in Mexico, Engine Build Code "M" ***
	J813 4518	1			Standard
	J813 4519	1			-.010"
	J813 4520	1			-.020"
	J813 4521	1			-.030"
	J813 4522	1			-.040"
23					RING PACKAGE, Piston ***
	J812 1683	1			Standard
	J812 1684	1			+.010"
					RING PACKAGE, Piston, VAM, Built in Mexico, Engine Build Code "M" ***
	J813 4531	1			Standard
	J813 4529	1			+.010"
24					PISTON PACKAGE ***
					1981-82
	J813 4208	6			Standard
	J813 2885	6			+.010"
					1983-86
	4762 940	6			Size 'B'
	4762 942	6			Size 'C'
	4762 943	6			Size 'D'
	J813 4442	6			+.010"
					PISTON PACKAGE, VAM, Built in Mexico, Engine Build Code "M" ***
	J813 4527	6			Standard
	8350 0419	6			+.010"

MODEL CODES

16=Cherokee 2 Dr.(1981-83)	78=Cherokee 4WD-4 Dr.(1984-86)	64=Comanche 2WD-6 Ft. Box(1986)	25=J-10 Truck 7 Ft. Box(1981-84)
17=Cherokee 2 Dr.(1981-83)	85=CJ-5 (1981-83)	66=Comanche 2WD-7 Ft. Box(1986)	26=J10 Truck 8 Ft. Box(1981-86)
73=Cherokee 2WD-2 Dr.(1984-86)	86=CJ-6(1981)	63=Comanche 4WD-6 Ft. Box(1986)	27=J-20 Truck 8 Ft. Box(1981-86)
74=Cherokee 2WD-4 Dr.(1984-86)	87=CJ-7(1981-86)	65=Comanche 4WD-7 Ft. Box(1986)	15=Wagoneer 4 Dr.(1981-83)
18=Cherokee 4 Dr.(1981-83)	88=CJ-8, Scrambler(1981-86)	15=Grand Wagoneer 4 Dr.(1984-86)	75=Wagoneer 4WD-4 Dr.(1984-86)
77=Cherokee 4WD-2 Dr.(1984-86)			

BODY
CJ=CJ-5, CJ-6, CJ-7, CJ-8, Scrambler(1981-86)
MJ=Comanche Pickup(1986)

STYLES
SJ=Wagoneer(1981-83), Grand Wagoneer(1984-86), Cherokee(1981-83), J-10, J-20(1981-86)
XJ=Wagoneer(1984-86), Cherokee(1984-86)

AR = Use as Required - = Non Illustrated Part P.A.R. = Paint as Required

CRANKSHAFT, FLYWHEEL AND PISTON SJ CHEROKEE, SJ WAGONEER J10
Figure 9B-2300

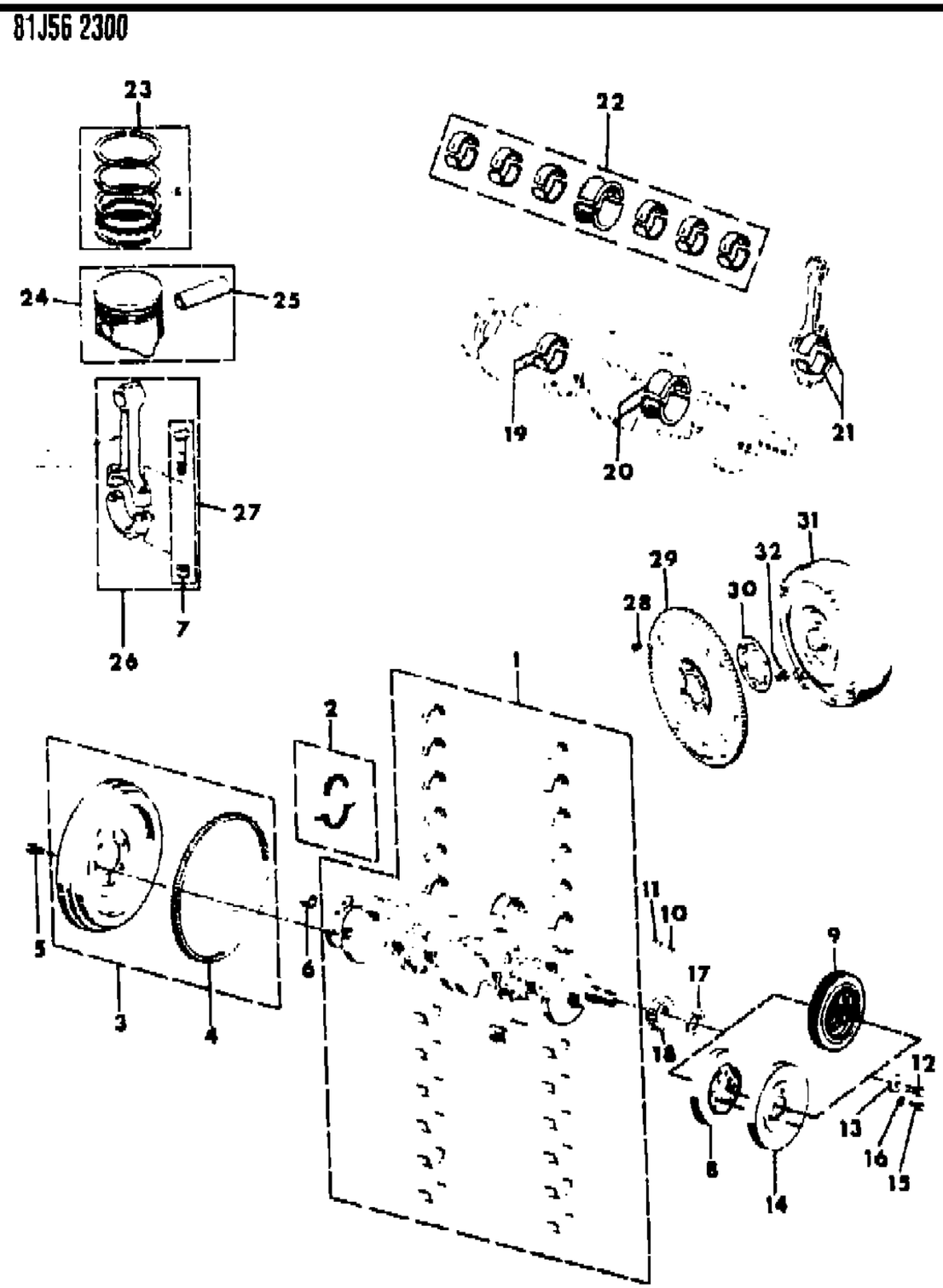

ITEM	PART NUMBER	QTY	BODY	MODEL	DESCRIPTION
	J813 4528	6			+.020"
	J813 4528	6			+.020"
	J813 4529	6			+.030"
	J813 4530	6			+.040"
25					PIN, Piston
	J318 0483	6			Standard
	8350 0303	6			+.003"
	8350 0304	6			+.005"
					PIN, Piston, VAM, Built in Mexico, Engine Build Code "M"
	J813 4535	6			Standard
	J813 4536	6			+.003"
	J813 4537	6			+.005"
26					ROD, Connecting
	J318 0444	6			Coded "707"
	J323 7812	6			Coded "352"
					ROD, Connecting, Vam, Built in Mexico, Engine Buiild Code "M"
	J813 4504	6			Coded "2009093"
	8350 1842	6			Coded "2027490"
27					BOLT PACKAGE ***
	J448 6626	12			Coded "707" or "2009093"
	J813 3824	12			Coded "352" or "2027490"
28	J321 4097	4			BOLT
29					PLATE, Converter Drive
	J323 2138	1			1981-83
	J323 2139	1			For Transmission Model "727"
30	J321 4094	1			REINFORCEMENT
31					CONVERTER, Transmission
					1981-83
	J813 3180	1			EXPORT
	JR77 5037	1			Remanufactured
					1983-86
	J813 2570	1			EXPORT
					For Transmission Coded "33000913
	J813 2569	1			EXPORT
	JR77 5035	1			Remanufactured
					For Transmission Coded "33000917"
	J813 2567	1			EXPORT, Australia
	JR77 5033	1			Remanufactured, "Australia"

MODEL CODES

16=Cherokee 2 Dr.(1981-83)	78=Cherokee 4WD-4 Dr.(1984-86)	64=Comanche 2WD-6 Ft. Box(1986)	25=J-10 Truck 7 Ft. Box(1981-84)
17=Cherokee 2 Dr.(1981-83)	85=CJ-5 (1981-83)	66=Comanche 2WD-7 Ft. Box(1986)	26=J10 Truck 8 Ft. Box(1981-86)
73=Cherokee 2WD-2 Dr.(1984-86)	86=CJ-6(1981)	63=Comanche 4WD-6 Ft. Box(1986)	27=J-20 Truck 8 Ft. Box(1981-86)
74=Cherokee 2WD-4 Dr.(1984-86)	87=CJ-7(1981-86)	65=Comanche 4WD-7 Ft. Box(1986)	15=Wagoneer 4 Dr.(1981-83)
18=Cherokee 4 Dr.(1981-83)	88=CJ-8, Scrambler(1981-86)	15=Grand Wagoneer 4 Dr.(1984-86)	75=Wagoneer 4WD-4 Dr.(1984-86)
77=Cherokee 4WD-2 Dr.(1984-86)			

BODY
CJ=CJ-5, CJ-6, CJ-7, CJ-8, Scrambler(1981-86)
MJ=Comanche Pickup(1986)

STYLES
SJ=Wagoneer(1981-83), Grand Wagoneer(1984-86), Cherokee(1981-83), J-10, J-20(1981-86)
XJ=Wagoneer(1984-86), Cherokee(1984-86)

AR = Use as Required - = Non Illustrated Part P.A.R. = Paint as Required

CRANKSHAFT, FLYWHEEL AND PISTON SJ CHEROKEE, SJ WAGONEER J10
Figure 9B-2300

81J56 2300

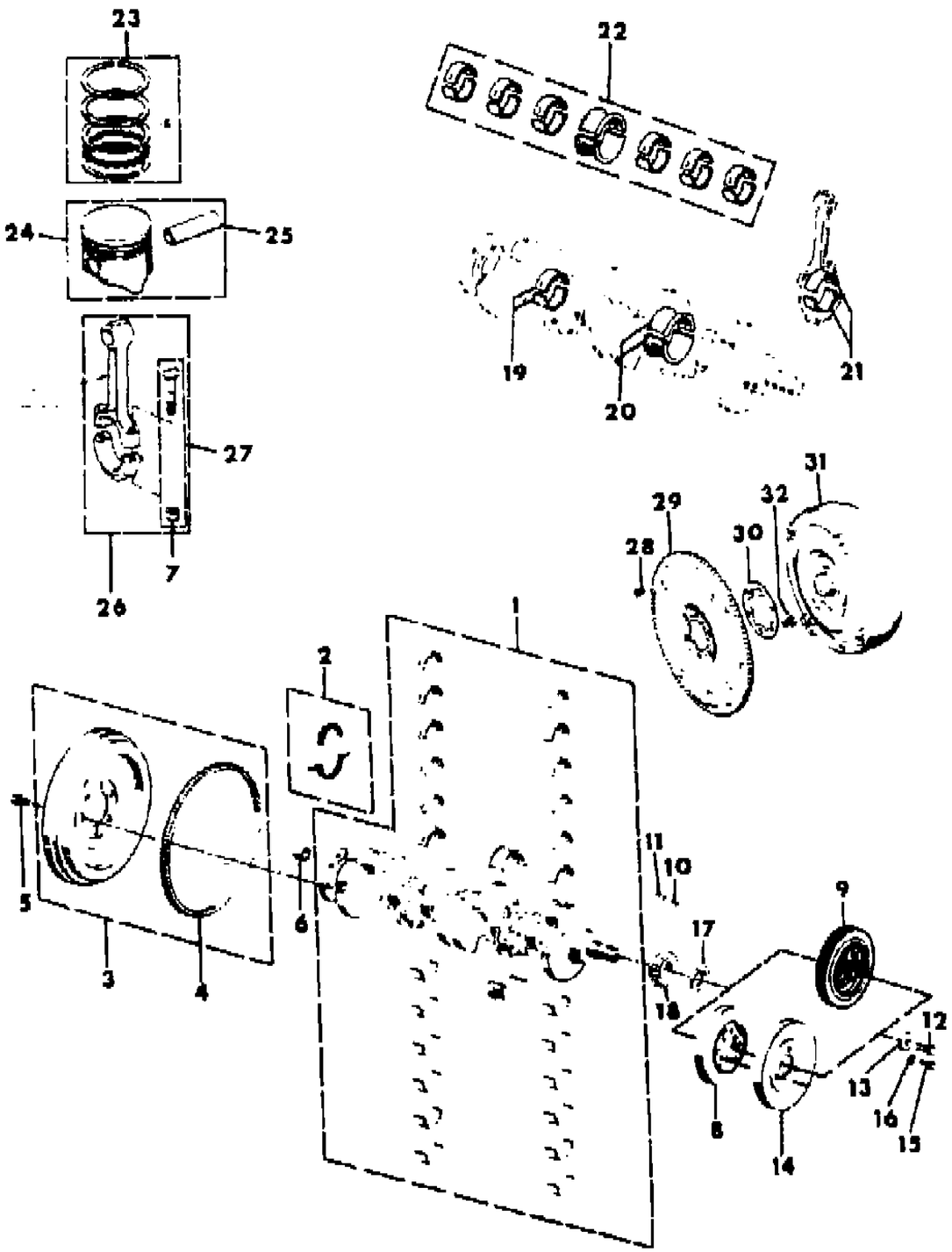

ITEM	PART NUMBER	QTY	BODY	MODEL	DESCRIPTION
32	J315 1407	AR			BOLT

MODEL CODES
16=Cherokee 2 Dr.(1981-83)
17=Cherokee 2 Dr.(1981-83)
73=Cherokee 2WD-2 Dr.(1984-86)
74=Cherokee 2WD-4 Dr.(1984-86)
18=Cherokee 4 Dr.(1981-83)
77=Cherokee 4WD-2 Dr.(1984-86)
78=Cherokee 4WD-4 Dr.(1984-86)
85=CJ-5 (1981-83)
86=CJ-6(1981)
87=CJ-7(1981-86)
88=CJ-8, Scrambler(1981-86)
64=Comanche 2WD-6 Ft. Box(1986)
66=Comanche 2WD-7 Ft. Box(1986)
63=Comanche 4WD-6 Ft. Box(1986)
65=Comanche 4WD-7 Ft. Box(1986)
15=Grand Wagoneer 4 Dr.(1984-86)
25=J-10 Truck 7 Ft. Box(1981-84)
26=J10 Truck 8 Ft. Box(1981-86)
27=J-20 Truck 8 Ft. Box(1981-86)
15=Wagoneer 4 Dr.(1981-83)
75=Wagoneer 4WD-4 Dr.(1984-86)

BODY
CJ=CJ-5, CJ-6, CJ-7, CJ-8, Scrambler(1981-86)
MJ=Comanche Pickup(1986)

STYLES
SJ=Wagoneer(1981-83), Grand Wagoneer(1984-86), Cherokee(1981-83), J-10, J-20(1981-86)
XJ=Wagoneer(1984-86), Cherokee(1984-86)

AR = Use as Required - = Non Illustrated Part P.A.R. = Paint as Required

« RETURN TO GROUP INDEX

CAMSHAFT AND VALVES SJ CHEROKEE, SJ WAGONEER J10
Figure 9B-2400

81J56 2400

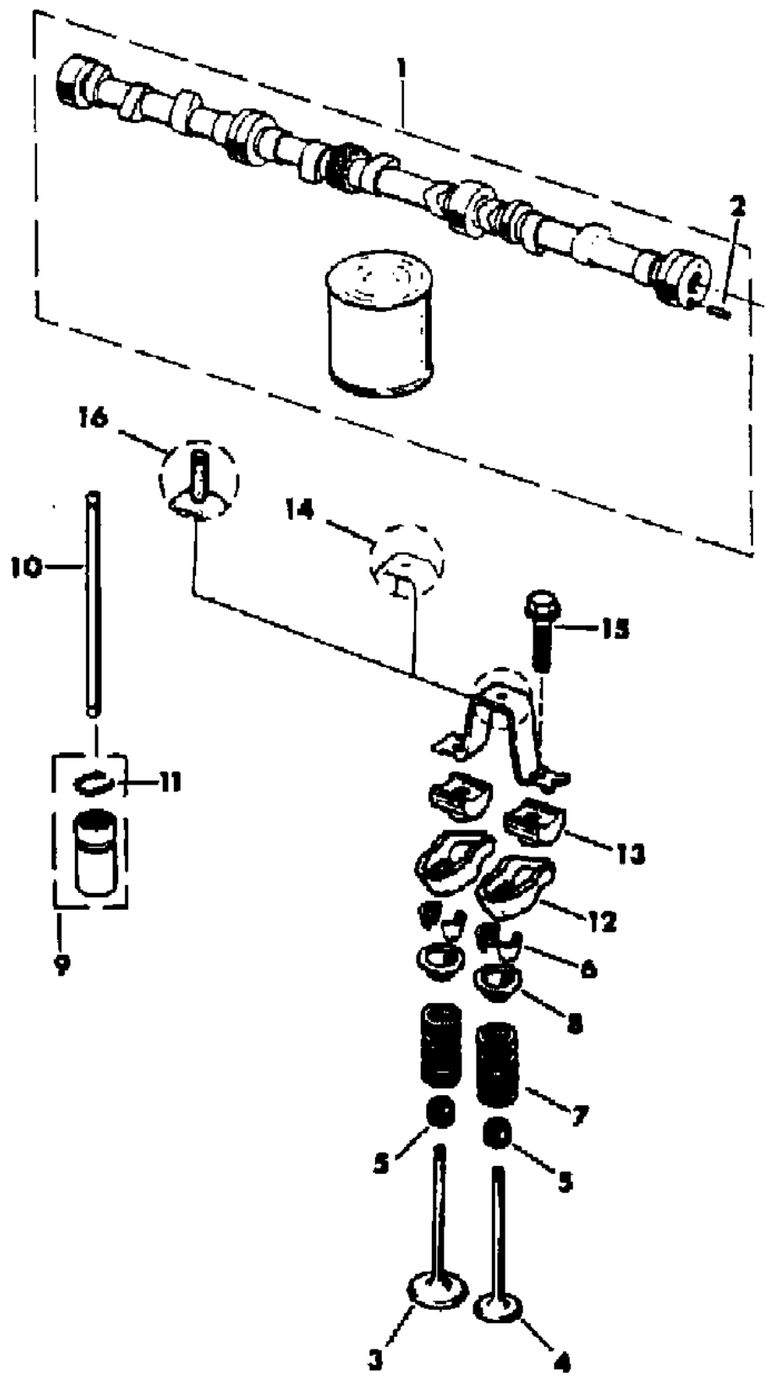

ITEM	PART NUMBER	QTY	BODY	MODEL	DESCRIPTION
1					CAMSHAFT
	J813 3009	1			Without VAM ***
	J813 4502	1			VAM, Built in Mexico, Engine Build Code "M"
2	J045 6384	1			PIN
3					VALVE, Intake
	J323 7465	6			Standard
	J324 0166	6			+.003"
	J324 0167	6			+.015"
					VALVE, Intake, VAM, Built in Mexico, Engine Code "M"
	J813 4507	6			Standard
	8350 0415	6			+.003"
	8350 0416	6			+.015"
4					VALVE, Exhaust
	J323 7464	6			Standard
	J324 0163	6			+.003"
	J324 0164	6			+.015"
					VALVE, Exhaust, VAM, Built in Mexico, Engine Build Code "M"
	J813 4506	6			Standard
	8350 0417	6			+.003"
	8350 0418	6			+.015"
5					DEFLECTOR, Valve ***
	J321 8976	12			Standard
	J321 8976	12			+.003"
	J321 8977	12			+.015"
	J321 8978	12			+.030"
	J320 5878	12			DEFLECTOR, Perfect Circle ***
	J320 5737	12			DEFLECTOR, Skinner ***
	J812 5844	12			DEFLECTOR, Skinner ***
6					KEEPER ***
	J318 0458	24			Without VAM
	J315 6157	24			VAM, Built in Mexico, Engine Build Code "M"
7					SPRING
	J322 8192	12			Without VAM
	J813 4508	12			VAM, Built in Mexico, Engine Build Code "M"
8	J323 1483	12			RETAINER
9					TAPPET
	J322 2276	12			Without VAM
	J813 4510	12			VAM, Built in Mexico, Engine Build Code "M"
10					PUSHROD ***

MODEL CODES

16=Cherokee 2 Dr.(1981-83)
17=Cherokee 2 Dr.(1981-83)
73=Cherokee 2WD-2 Dr.(1984-86)
74=Cherokee 2WD-4 Dr.(1984-86)
18=Cherokee 4 Dr.(1981-83)
77=Cherokee 4WD-2 Dr.(1984-86)
78=Cherokee 4WD-4 Dr.(1984-86)
85=CJ-5 (1981-83)
86=CJ-6(1981)
87=CJ-7(1981-86)
88=CJ-8, Scrambler(1981-86)
64=Comanche 2WD-6 Ft. Box(1986)
66=Comanche 2WD-7 Ft. Box(1986)
63=Comanche 4WD-6 Ft. Box(1986)
65=Comanche 4WD-7 Ft. Box(1986)
15=Grand Wagoneer 4 Dr.(1984-86)
25=J-10 Truck 7 Ft. Box(1981-84)
26=J10 Truck 8 Ft. Box(1981-86)
27=J-20 Truck 8 Ft. Box(1981-86)
15=Wagoneer 4 Dr.(1981-83)
75=Wagoneer 4WD-4 Dr.(1984-86)

BODY
CJ=CJ-5, CJ-6, CJ-7, CJ-8, Scrambler(1981-86)
MJ=Comanche Pickup(1986)

STYLES
SJ=Wagoneer(1981-83), Grand Wagoneer(1984-86), Cherokee(1981-83), J-10, J-20(1981-86)
XJ=Wagoneer(1984-86), Cherokee(1984-86)

AR = Use as Required - = Non Illustrated Part P.A.R. = Paint as Required

81J56 2400

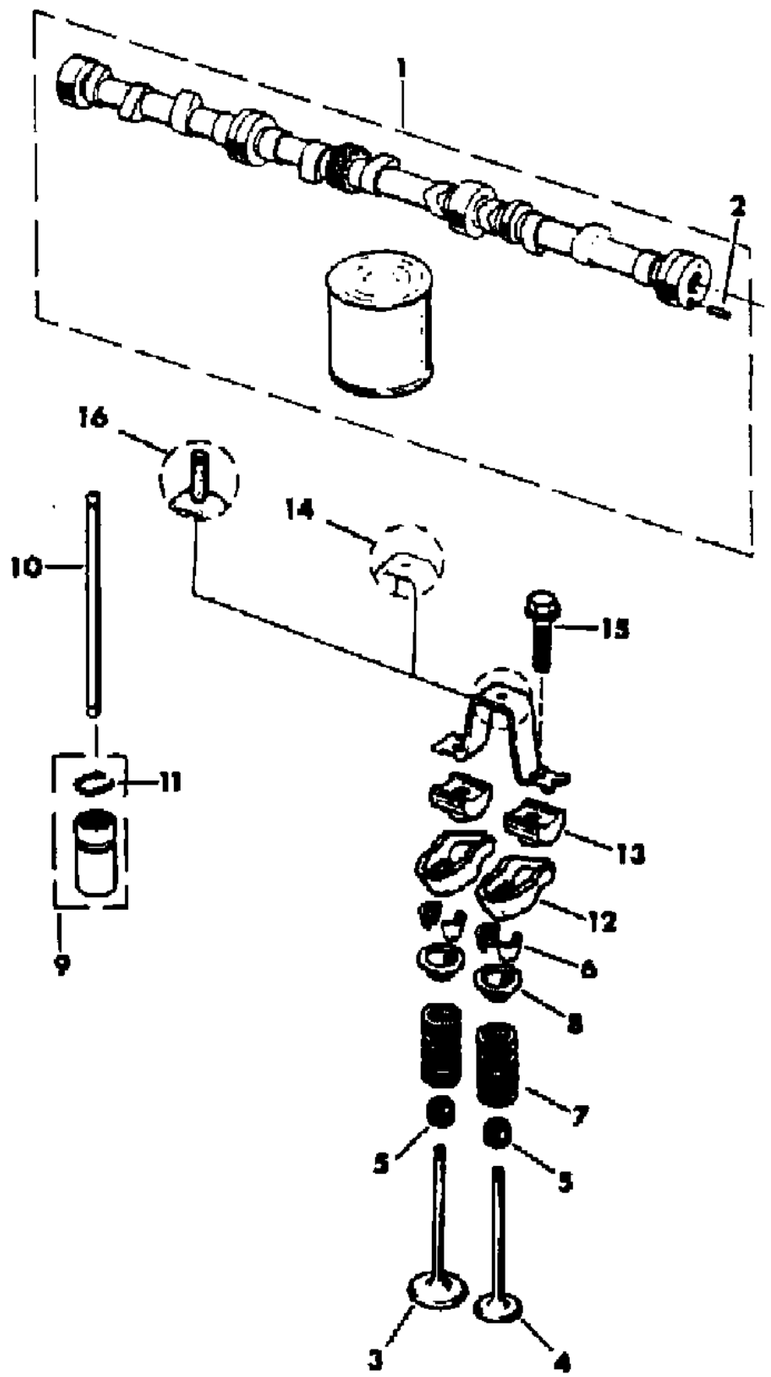

ITEM	PART NUMBER	QTY	BODY	MODEL	DESCRIPTION
	J324 2395	12			Without VAM
	J813 4539	12			VAM, Built in Mexico, Engine Build Code "M", Length 9.659"-9.679"
	8350 0671	12			VAM, Built in Mexico, Engine Build Code "M", Length 9.690"-9.710"
11	J644 0614	12			RING
12					ARM, Valve Rocker
	J322 3888	12			1981-82
	J324 2393	12			1983-86
	J322 3888	12			VAM, Built in Mexico, Engine Build Code "M", Length 9.659"-9.679"
	J324 2393	12			VAM, Built in Mexico, Engine Build Code "M", Length 9.690"-9.710"
13	J323 5090	12			PIVOT
14					BRIDGE ***
	J323 6513	AR			Without VAM
	8350 0672	AR			VAM, Built in Mexico, Engine Build Code "M"
15	J812 0512	12			BOLT
16					BRIDGE ***
	J323 7851	AR			Without VAM
	8350 0673	AR			VAM, Built in Mexico, Engine Build Code "M"

MODEL CODES

16=Cherokee 2 Dr.(1981-83)
17=Cherokee 2 Dr.(1981-83)
73=Cherokee 2WD-2 Dr.(1984-86)
74=Cherokee 2WD-4 Dr.(1984-86)
18=Cherokee 4 Dr.(1981-83)
77=Cherokee 4WD-2 Dr.(1984-86)
78=Cherokee 4WD-4 Dr.(1984-86)
85=CJ-5 (1981-83)
86=CJ-6(1981)
87=CJ-7(1981-86)
88=CJ-8, Scrambler(1981-86)
64=Comanche 2WD-6 Ft. Box(1986)
66=Comanche 2WD-7 Ft. Box(1986)
63=Comanche 4WD-6 Ft. Box(1986)
65=Comanche 4WD-7 Ft. Box(1986)
15=Grand Wagoneer 4 Dr.(1984-86)
25=J-10 Truck 7 Ft. Box(1981-84)
26=J10 Truck 8 Ft. Box(1981-86)
27=J-20 Truck 8 Ft. Box(1981-86)
15=Wagoneer 4 Dr.(1981-83)
75=Wagoneer 4WD-4 Dr.(1984-86)

BODY
CJ=CJ-5, CJ-6, CJ-7, CJ-8, Scrambler(1981-86)
MJ=Comanche Pickup(1986)

STYLES
SJ=Wagoneer(1981-83), Grand Wagoneer(1984-86), Cherokee(1981-83), J-10, J-20(1981-86)
XJ=Wagoneer(1984-86), Cherokee(1984-86)

AR = Use as Required - = Non Illustrated Part P.A.R. = Paint as Required

TIMING COVER SJ CHEROKEE, SJ WAGONEER J10
Figure 9B-2500

81J56 2500

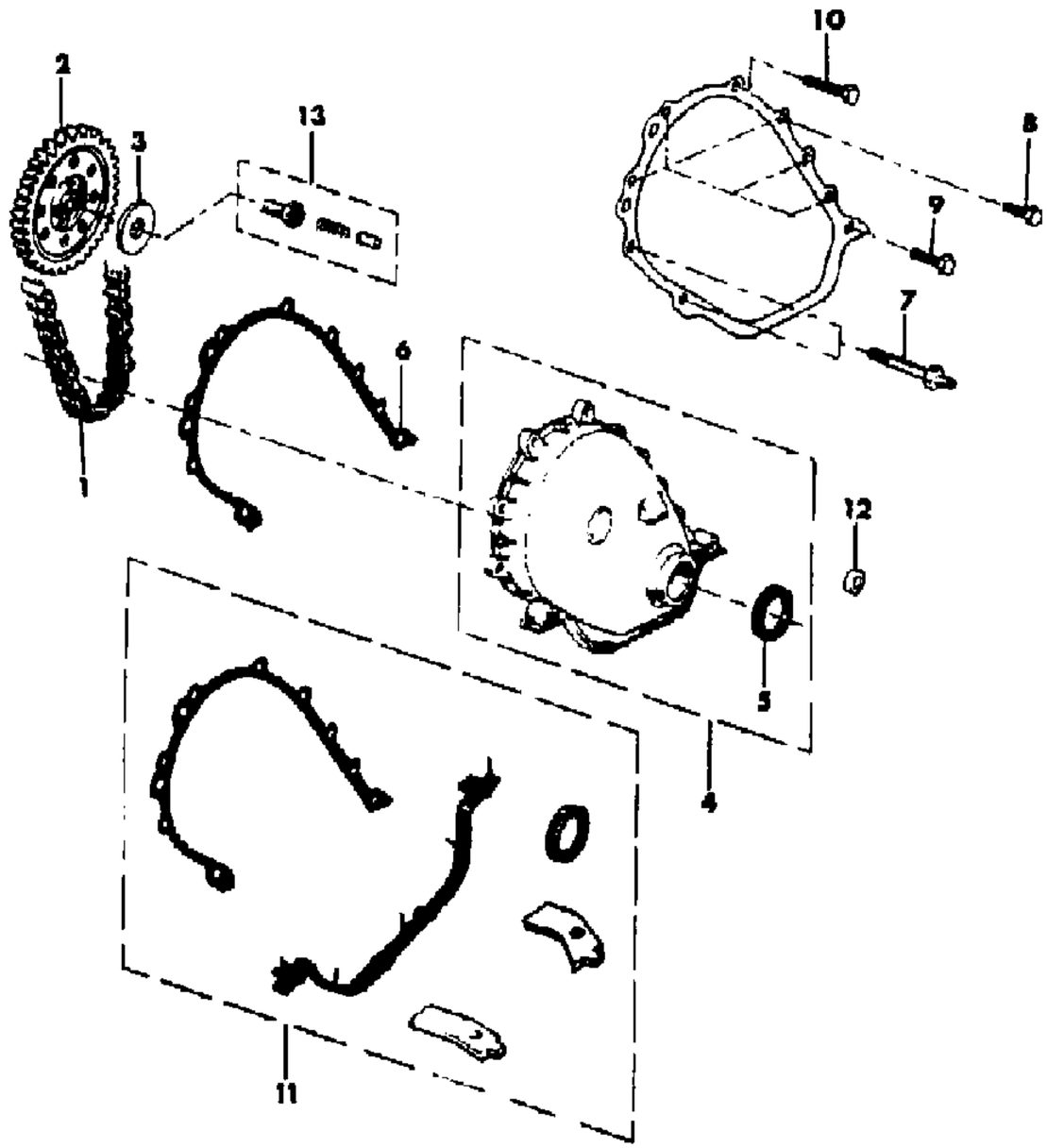

ITEM	PART NUMBER	QTY	BODY	MODEL	DESCRIPTION
1	J324 0781	1			CHAIN, Timing
2	J320 6693	1			SPROCKET, Camshaft
3	J317 3284	1			WASHER
4	J322 5186	1			COVER, Timing Cover
5	3300 4681	1			SEAL
6	J322 5187	1			GASKET
7	J400 6973	AR			BOLT, Stud
8	J400 6906	5			BOLT
9	6034 914	1			BOLT
10	J400 6950	AR			BOLT
11	J812 9097	1			GASKET PACKAGE
12					WASHER
	J012 0380	AR			1/4"
	J400 3803	AR			3/8"
	J012 0214	AR			5/16"
13	8350 2890	1			PIN KIT ***

MODEL CODES

16=Cherokee 2 Dr.(1981-83)
17=Cherokee 2 Dr.(1981-83)
73=Cherokee 2WD-2 Dr.(1984-86)
74=Cherokee 2WD-4 Dr.(1984-86)
18=Cherokee 4 Dr.(1981-83)
77=Cherokee 4WD-2 Dr.(1984-86)
78=Cherokee 4WD-4 Dr.(1984-86)
85=CJ-5 (1981-83)
86=CJ-6(1981)
87=CJ-7(1981-86)
88=CJ-8, Scrambler(1981-86)
64=Comanche 2WD-6 Ft. Box(1986)
66=Comanche 2WD-7 Ft. Box(1986)
63=Comanche 4WD-6 Ft. Box(1986)
65=Comanche 4WD-7 Ft. Box(1986)
15=Grand Wagoneer 4 Dr.(1984-86)
25=J-10 Truck 7 Ft. Box(1981-84)
26=J10 Truck 8 Ft. Box(1981-86)
27=J-20 Truck 8 Ft. Box(1981-86)
15=Wagoneer 4 Dr.(1981-83)
75=Wagoneer 4WD-4 Dr.(1984-86)

BODY
CJ=CJ-5, CJ-6, CJ-7, CJ-8, Scrambler(1981-86)
MJ=Comanche Pickup(1986)

STYLES
SJ=Wagoneer(1981-83), Grand Wagoneer(1984-86), Cherokee(1981-83), J-10, J-20(1981-86)
XJ=Wagoneer(1984-86), Cherokee(1984-86)

AR = Use as Required - = Non Illustrated Part P.A.R. = Paint as Required

« RETURN TO GROUP INDEX

ENGINE OILING SJ CHEROKEE, SJ WAGONEER J10
Figure 9B-2600

81J56 2600

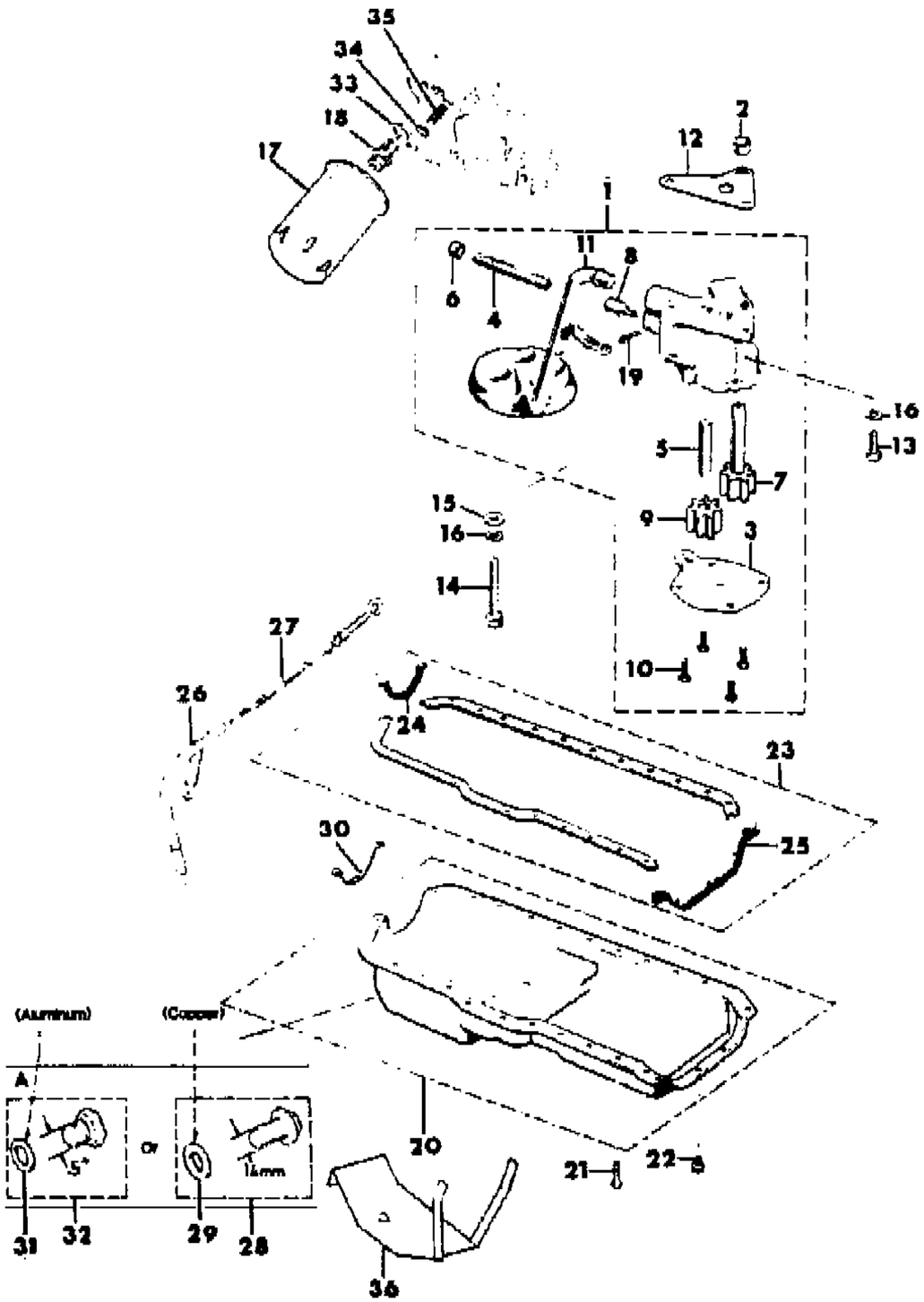

ITEM	PART NUMBER	QTY	BODY	MODEL	DESCRIPTION
1					PUMP, Engine Oil
	J324 2141	1			Oil Pump Cover Has Four Mounting Holes and a Tab with a slotted hole
	J323 8637	1			Oil Pump Cover Has Four Mounting Holes and No Tab
2	J400 5149	1			PIN
3					COVER, Oil Pump
	J324 1733	1			Has Four Mounting Holes and a Tab with a Slotted Hole
	J321 6612	1			Has Four Mounting Holes and No Tab
4	J323 9668	1			SPRING
5	J317 1956	1			SHAFT, Oil Pump Gear
6	J317 1958	1			RETAINER
7	J317 2334	1			GEAR, Oil Pump Drive
8					PLUNGER
	J318 8661	1			Standard
	J324 1676	1			+.010"
9	J319 6843	1			GEAR, Oil Pump Driven
10	J812 2990	4			SCREW
11					TUBE, Oil Pump Inlet
	J324 2140	1			Oil Pump Cover Has Four Mounting Holes and a Tab with a Slotted Hole
	J318 1471	1			Oil Pump Cover Has Four Mounting Holes and No Tab
12	J317 2332	1			GASKET
13	J018 0078	1			BOLT, (.88")
14	J027 1486	1			BOLT, (2.62")
15	J012 0393	1			WASHER
16	J012 0214	2			WASHER, Lock
17					FILTER, Engine Oil
	J813 3965	1			1981-82
	J324 2397	1			1983-86
18	J317 3226	1			CONNECTOR
19	S010 8635	1			PIN, Cotter
20					PAN, Engine Oil
	J323 6547	1			1981-84
	J324 3152	1			1985-86
	J813 4511	1			VAM, Built in Mexico, Engine Build Code "M"
21	J400 6296	23			SCREW
22	J400 6297	4			SCREW
23					GASKET PACKAGE
	8350 4662	1			Without VAM

MODEL CODES

16=Cherokee 2 Dr.(1981-83)
17=Cherokee 2 Dr.(1981-83)
73=Cherokee 2WD-2 Dr.(1984-86)
74=Cherokee 2WD-4 Dr.(1984-86)
18=Cherokee 4 Dr.(1981-83)
77=Cherokee 4WD-2 Dr.(1984-86)
78=Cherokee 4WD-4 Dr.(1984-86)
85=CJ-5 (1981-83)
86=CJ-6(1981)
87=CJ-7(1981-86)
88=CJ-8, Scrambler(1981-86)
64=Comanche 2WD-6 Ft. Box(1986)
66=Comanche 2WD-7 Ft. Box(1986)
63=Comanche 4WD-6 Ft. Box(1986)
65=Comanche 4WD-7 Ft. Box(1986)
15=Grand Wagoneer 4 Dr.(1984-86)
25=J-10 Truck 7 Ft. Box(1981-84)
26=J10 Truck 8 Ft. Box(1981-86)
27=J-20 Truck 8 Ft. Box(1981-86)
15=Wagoneer 4 Dr.(1981-83)
75=Wagoneer 4WD-4 Dr.(1984-86)

BODY
CJ=CJ-5, CJ-6, CJ-7, CJ-8, Scrambler(1981-86)
MJ=Comanche Pickup(1986)

STYLES
SJ=Wagoneer(1981-83), Grand Wagoneer(1984-86), Cherokee(1981-83), J-10, J-20(1981-86)
XJ=Wagoneer(1984-86), Cherokee(1984-86)

AR = Use as Required - = Non Illustrated Part P.A.R. = Paint as Required

« RETURN TO GROUP INDEX »

ENGINE OILING SJ CHEROKEE, SJ WAGONEER J10
Figure 9B-2600

81J56 2600

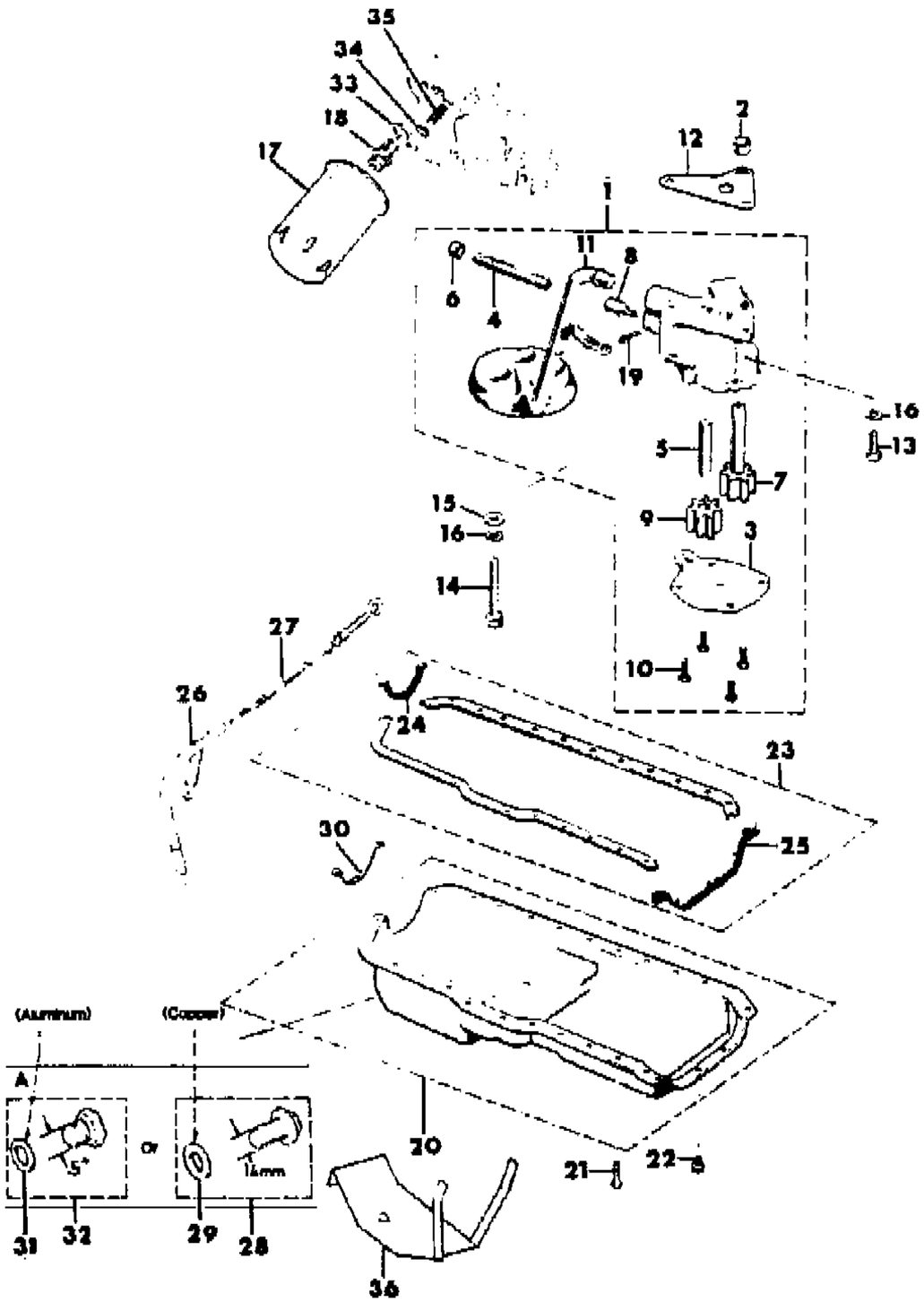

ITEM	PART NUMBER	QTY	BODY	MODEL	DESCRIPTION
	J813 4512	1			VAM, Built in Mexico, Engine Build Code "M"
24	3300 4733	1			SEAL
25	8350 4654	1			SEAL
26					TUBE, Engine Oil Indicator
	J317 6846	1			1981-82
	J324 2449	1			1983-86
27					INDICATOR, Engine Oil Indicator
	J323 7515	1			1981-82
	J324 2441	1			1983-86
28	8350 1425	1			PLUG PACKAGE, 1984-86
29	J324 3136	1			GASKET, Copper, (.90") OD
30	J324 3116	1			SUPPORT, Oil Pan Rear
31	J317 0271	1			GASKET, Aluminum, (.50" OD)
32					PLUG PACKAGE
	J812 1449	1			1981-84, Non-Magnetic
	J320 6696	1			1981-84; Magnetic
33	J317 3225	1			RETAINER
34	J317 3203	1			VALVE
35	J317 3224	1			SPRING
36	J805 1371	1			PLATE, Skid, Vam, Built in Mexico, Engine Build code "M"

MODEL CODES

16=Cherokee 2 Dr.(1981-83)
17=Cherokee 2 Dr.(1981-83)
73=Cherokee 2WD-2 Dr.(1984-86)
74=Cherokee 2WD-4 Dr.(1984-86)
18=Cherokee 4 Dr.(1981-83)
77=Cherokee 4WD-2 Dr.(1984-86)
78=Cherokee 4WD-4 Dr.(1984-86)
85=CJ-5 (1981-83)
86=CJ-6(1981)
87=CJ-7(1981-86)
88=CJ-8, Scrambler(1981-86)
64=Comanche 2WD-6 Ft. Box(1986)
66=Comanche 2WD-7 Ft. Box(1986)
63=Comanche 4WD-6 Ft. Box(1986)
65=Comanche 4WD-7 Ft. Box(1986)
15=Grand Wagoneer 4 Dr.(1984-86)
25=J-10 Truck 7 Ft. Box(1981-84)
26=J10 Truck 8 Ft. Box(1981-86)
27=J-20 Truck 8 Ft. Box(1981-86)
15=Wagoneer 4 Dr.(1981-83)
75=Wagoneer 4WD-4 Dr.(1984-86)

BODY
CJ=CJ-5, CJ-6, CJ-7, CJ-8, Scrambler(1981-86)
MJ=Comanche Pickup(1986)

STYLES
SJ=Wagoneer(1981-83), Grand Wagoneer(1984-86), Cherokee(1981-83), J-10, J-20(1981-86)
XJ=Wagoneer(1984-86), Cherokee(1984-86)

AR = Use as Required - = Non Illustrated Part P.A.R. = Paint as Required

« RETURN TO GROUP INDEX

ENGINE OIL FILTER, REMOTE SEVERE USE SJ CHEROKEE, SJ WAGONEER, J10
Figure 9B-2700

81J56 2700

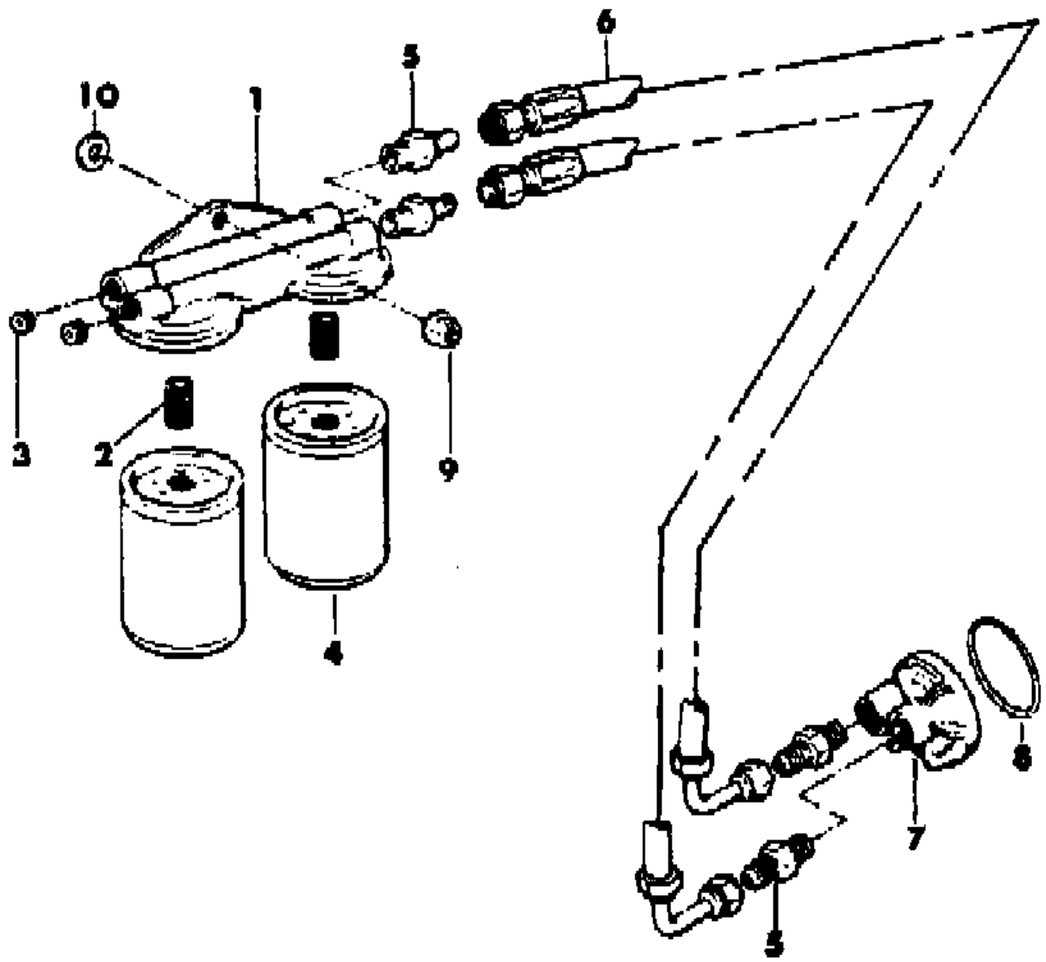

ITEM	PART NUMBER	QTY	BODY	MODEL	DESCRIPTION
1	J805 1353	1			BASE
2	J805 1354	2			NIPPLE
3	J805 1412	2			PLUG
4	J805 1330	2			FILTER, Engine Oil
5	J805 3020	4			FITTING ***
6	J805 3016	2			HOSE
7	J805 1351	1			ADAPTER
8	J805 1352	1			O-RING
9	J400 6725	3			NUT
10	J400 0480	3			WASHER

MODEL CODES

16=Cherokee 2 Dr.(1981-83)
17=Cherokee 2 Dr.(1981-83)
73=Cherokee 2WD-2 Dr.(1984-86)
74=Cherokee 2WD-4 Dr.(1984-86)
18=Cherokee 4 Dr.(1981-83)
77=Cherokee 4WD-2 Dr.(1984-86)
78=Cherokee 4WD-4 Dr.(1984-86)
85=CJ-5 (1981-83)
86=CJ-6(1981)
87=CJ-7(1981-86)
88=CJ-8, Scrambler(1981-86)
64=Comanche 2WD-6 Ft. Box(1986)
66=Comanche 2WD-7 Ft. Box(1986)
63=Comanche 4WD-6 Ft. Box(1986)
65=Comanche 4WD-7 Ft. Box(1986)
15=Grand Wagoneer 4 Dr.(1984-86)
25=J-10 Truck 7 Ft. Box(1981-84)
26=J10 Truck 8 Ft. Box(1981-86)
27=J-20 Truck 8 Ft. Box(1981-86)
15=Wagoneer 4 Dr.(1981-83)
75=Wagoneer 4WD-4 Dr.(1984-86)

BODY
CJ=CJ-5, CJ-6, CJ-7, CJ-8, Scrambler(1981-86)
MJ=Comanche Pickup(1986)

STYLES
SJ=Wagoneer(1981-83), Grand Wagoneer(1984-86), Cherokee(1981-83), J-10, J-20(1981-86)
XJ=Wagoneer(1984-86), Cherokee(1984-86)

AR = Use as Required - = Non Illustrated Part P.A.R. = Paint as Required

« RETURN TO GROUP INDEX

MANIFOLD, INTAKE AND EXHAUST SJ CHEROKEE, SJ WAGONEER, J10
Figure 9B-2800

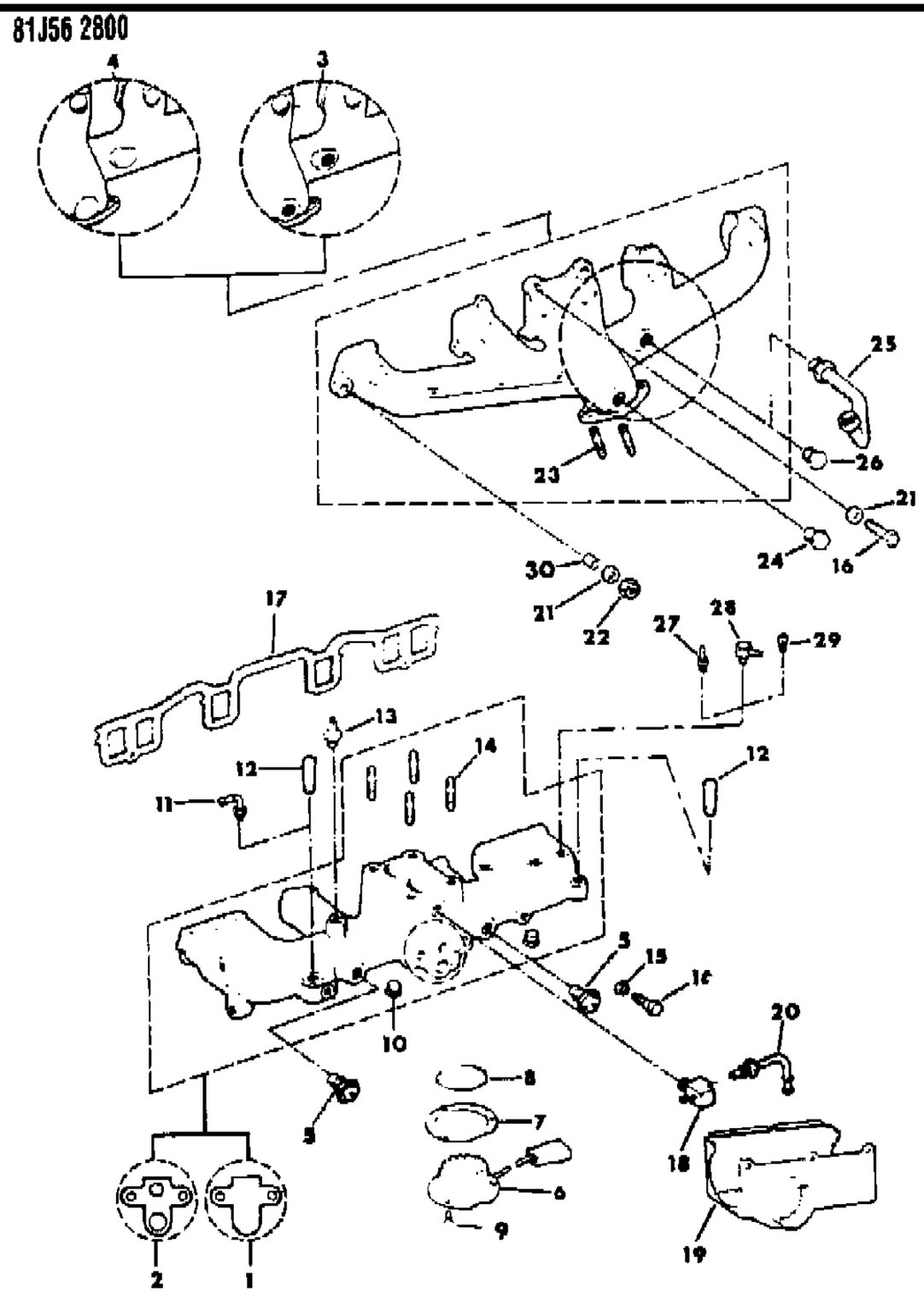

ITEM	PART NUMBER	QTY	BODY	MODEL	DESCRIPTION
1	3300 0337	1			MANIFOLD, Intake, EXPORT, Non-Regulated Markets, Without Exhaust Emission Pump
2					MANIFOLD, Intake
	J813 3011	1			1981-82
	8350 0204	1			1983-86
3					MANIFOLD, Exhaust
	J323 7427	1			1981-82
	J323 7426	1			1983-86
	J323 7426	1			1981-86: CANADA, Without Exhaust Emission Pump
	J323 7426	1			1981-86: With Exhaust Gas Recirculation, Without Exhaust Emission Pump
	J323 7427	1			1981-86: With Exhaust Emission Pump, with Exhaust Gas Recirculation
4	3300 0584	1			MANIFOLD, Exhaust, 1983-86: EXPORT, Without Exhaust Emission Pump, Without Exhaust Gas Recirculation
5					SWITCH
	J323 9065	1			1981: US-49 States
	J323 9126	1			1981: US-California Only
	J322 2254	1			1982
	J323 9065	1			1982: EXPORT
	J324 2321	1			1983-86: One Terminal
	J324 2318	1			1983-86: Two Terminals
6					HEATER, Early Fuel Evaporation
	J323 8718	1			1981-82
	J324 2601	1			1983-86
7	J323 8909	1			GASKET
8	J420 0431	1			O-RING
9	J018 0016	3			BOLT
10	S940 9961	2			PLUG
11	J324 0081	1			ELBOW
12	J314 2368	2			NIPPLE
13	3300 0902	1			SENSOR, Knock, 1983-86
14	J400 6722	4			STUD
15	8350 4222	8			WASHER, Clamp
16	J018 6622	10			BOLT
17	J323 7775	1			GASKET
18	J323 9145	1			FITTING ***
19	J323 8506	1			SHROUD, Exhaust Manifold ***
20	J536 2870	1			TUBE, Vacuum

MODEL CODES

16=Cherokee 2 Dr.(1981-83)
17=Cherokee 2 Dr.(1981-83)
73=Cherokee 2WD-2 Dr.(1984-86)
74=Cherokee 2WD-4 Dr.(1984-86)
18=Cherokee 4 Dr.(1981-83)
77=Cherokee 4WD-2 Dr.(1984-86)
78=Cherokee 4WD-4 Dr.(1984-86)
85=CJ-5 (1981-83)
86=CJ-6(1981)
87=CJ-7(1981-86)
88=CJ-8, Scrambler(1981-86)
64=Comanche 2WD-6 Ft. Box(1986)
66=Comanche 2WD-7 Ft. Box(1986)
63=Comanche 4WD-6 Ft. Box(1986)
65=Comanche 4WD-7 Ft. Box(1986)
15=Grand Wagoneer 4 Dr.(1984-86)
25=J-10 Truck 7 Ft. Box(1981-84)
26=J10 Truck 8 Ft. Box(1981-86)
27=J-20 Truck 8 Ft. Box(1981-86)
15=Wagoneer 4 Dr.(1981-83)
75=Wagoneer 4WD-4 Dr.(1984-86)

BODY
CJ=CJ-5, CJ-6, CJ-7, CJ-8, Scrambler(1981-86)
MJ=Comanche Pickup(1986)

STYLES
SJ=Wagoneer(1981-83), Grand Wagoneer(1984-86), Cherokee(1981-83), J-10, J-20(1981-86)
XJ=Wagoneer(1984-86), Cherokee(1984-86)

AR = Use as Required - = Non Illustrated Part P.A.R. = Paint as Required

MANIFOLD, INTAKE AND EXHAUST SJ CHEROKEE, SJ WAGONEER, J10
Figure 9B-2800

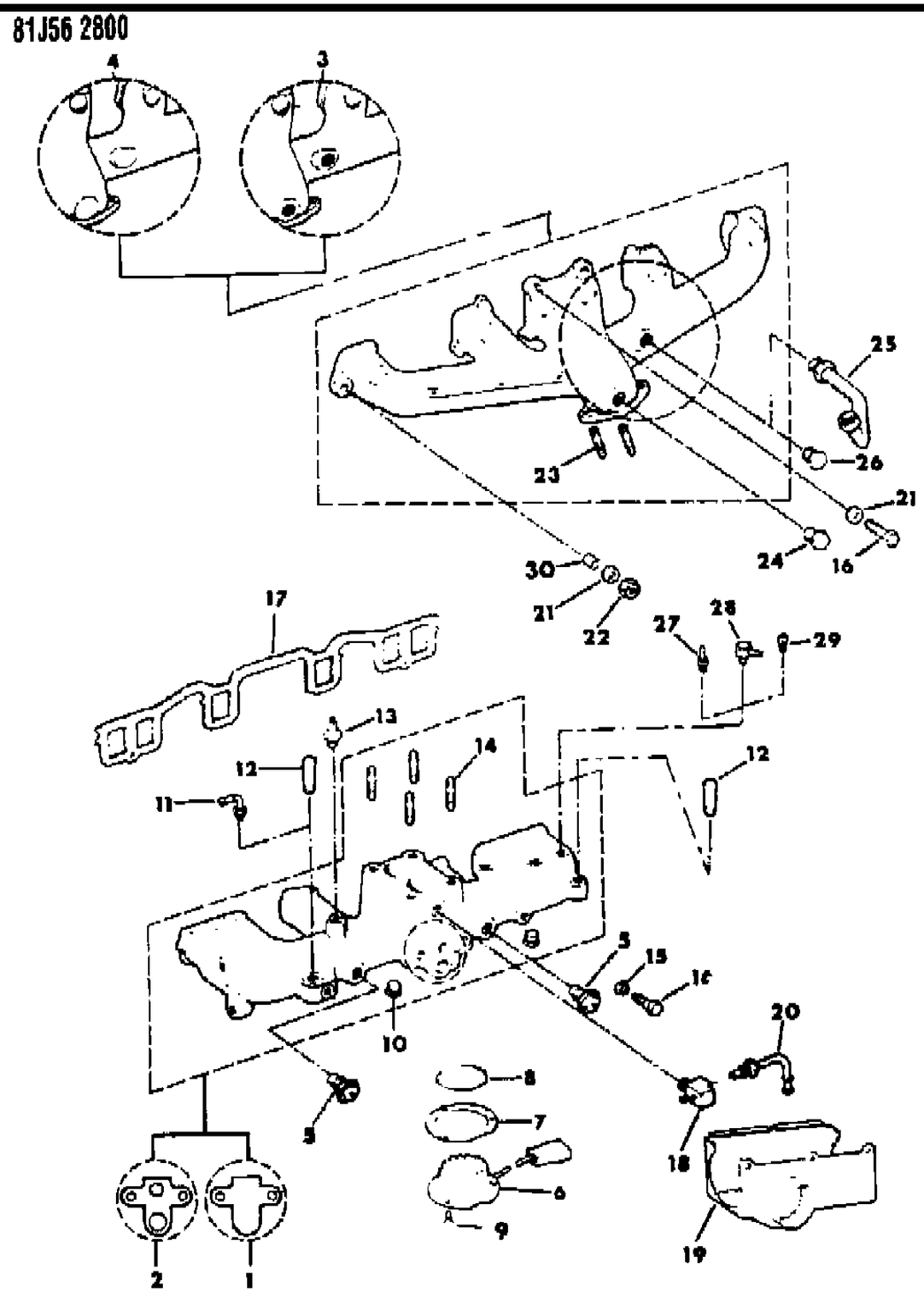

ITEM	PART NUMBER	QTY	BODY	MODEL	DESCRIPTION
21	J317 3077	4			WASHER
22	J535 1688	2			NUT
23	J400 6547	2			STUD
24	J420 0413	1			PLUG
25	J323 7776	1			TUBE, EGR
26	J063 9979	1			PLUG
27	J321 5574	1			FITTING ***
28	J323 9146	1			FITTING ***
29	J010 3877	1			PLUG
30	3300 4026	1			SPACER

MODEL CODES

16=Cherokee 2 Dr.(1981-83)
17=Cherokee 2 Dr.(1981-83)
73=Cherokee 2WD-2 Dr.(1984-86)
74=Cherokee 2WD-4 Dr.(1984-86)
18=Cherokee 4 Dr.(1981-83)
77=Cherokee 4WD-2 Dr.(1984-86)
78=Cherokee 4WD-4 Dr.(1984-86)
85=CJ-5 (1981-83)
86=CJ-6(1981)
87=CJ-7(1981-86)
88=CJ-8, Scrambler(1981-86)
64=Comanche 2WD-6 Ft. Box(1986)
66=Comanche 2WD-7 Ft. Box(1986)
63=Comanche 4WD-6 Ft. Box(1986)
65=Comanche 4WD-7 Ft. Box(1986)
15=Grand Wagoneer 4 Dr.(1984-86)
25=J-10 Truck 7 Ft. Box(1981-84)
26=J10 Truck 8 Ft. Box(1981-86)
27=J-20 Truck 8 Ft. Box(1981-86)
15=Wagoneer 4 Dr.(1981-83)
75=Wagoneer 4WD-4 Dr.(1984-86)

BODY
CJ=CJ-5, CJ-6, CJ-7, CJ-8, Scrambler(1981-86)
MJ=Comanche Pickup(1986)

STYLES
SJ=Wagoneer(1981-83), Grand Wagoneer(1984-86), Cherokee(1981-83), J-10, J-20(1981-86)
XJ=Wagoneer(1984-86), Cherokee(1984-86)

AR = Use as Required - = Non Illustrated Part P.A.R. = Paint as Required

« RETURN TO GROUP INDEX

ENGINE MOUNTING SJ CHEROKEE, SJ WAGONEER, J10
Figure 9B-2900

81J56 2900

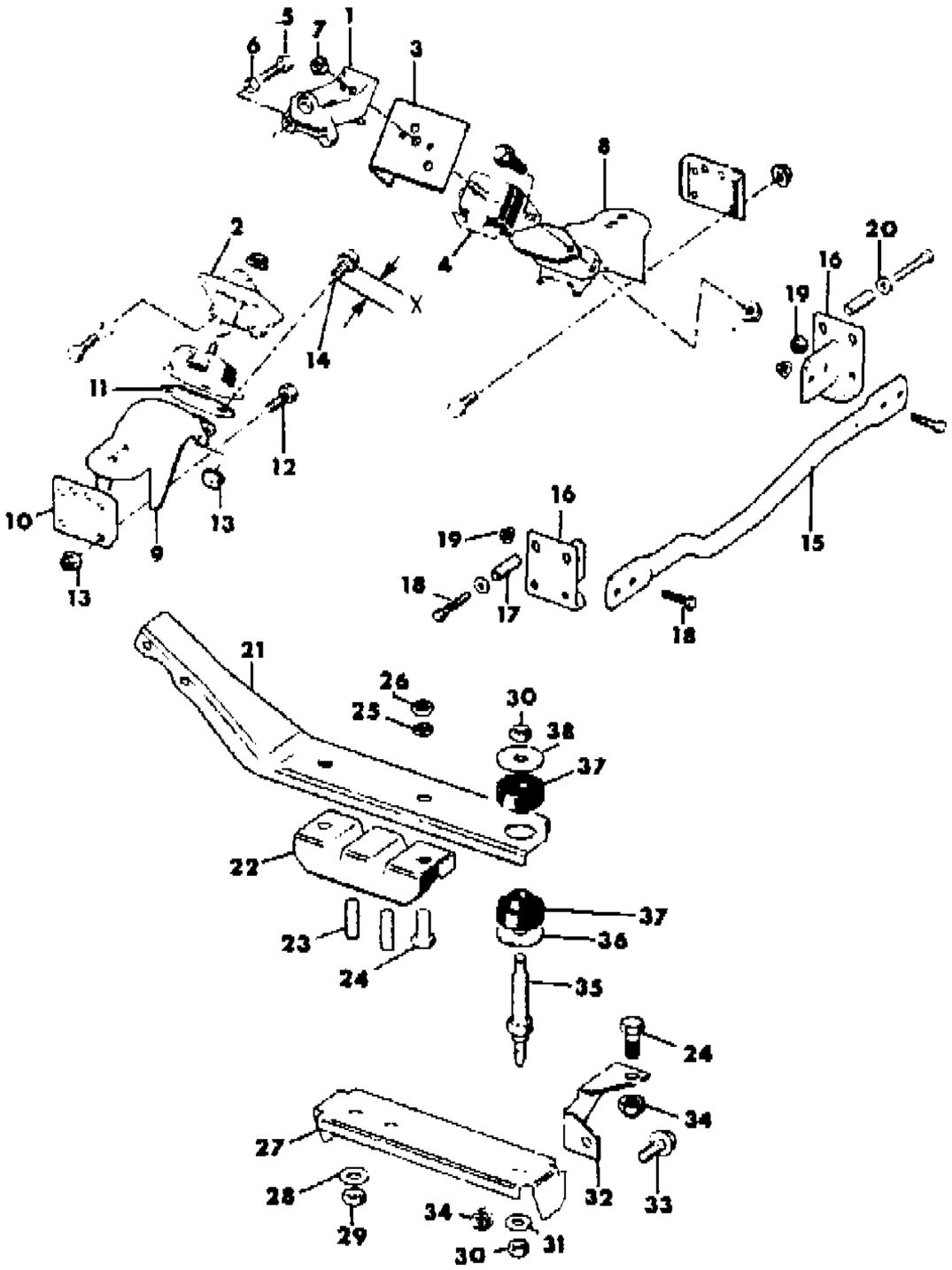

ITEM	PART NUMBER	QTY	BODY	MODEL	DESCRIPTION
1					BRACKET, Engine
	J535 1785	1			1981-84: Used with Shim Between Insulator and Bracket
	J536 4438	1			1984-86: Used without Shim Between Insulator and Bracket
2					BRACKET, Engine
	J535 1784	1			1981-84: Used With Shim Between Insulator and Bracket
	J536 4439	1			1984-86: Used without Shim Between Insulator and Bracket
3	J535 4449	1			SHIELD, Heat
4	J812 8488	2			MOUNT, Engine ***
5	J018 0123	6			BOLT
6	J012 0382	6			WASHER, Lock
7	J400 3975	2			NUT
8	J535 2439	1			BRACKET
9	J535 2440	1			BRACKET
10	J535 3589	2			REINFORCEMENT
11	J536 4387	2			SHIM ***
12	J942 1204	6			BOLT
13	J400 3909	6			NUT
14					BOLT
	J027 3773	4			1981-84
	S018 0124	1			1985-86: (1.25")
	J018 0122	3			1985-86: (1.00")
15	9200 0008	1			BAR, Tie, EXPORT, Severe Use
16	9200 0009	2			BRACKET, EXPORT, Severe Use
17	9200 0010	2			SPACER, EXPORT, Severe Use
18	J400 6864	AR			BOLT, EXPORT, Severe Use
19	J400 6445	AR			NUT, EXPORT, Severe Use
20	J400 3926	AR			WASHER, EXPORT, Severe Use
21	J536 4455	1			BRACKET
22	J137 0910	1			INSULATOR
23	J400 4819	2			STUD
24	J018 0145	2			BOLT
25	J012 0383	1			WASHER
26	J027 1501	1			NUT
27	J536 3123	1			BRACKET
28	J400 1120	2			WASHER
29	J941 3215	2			NUT
30	J941 1783	2			NUT
31	J400 1104	1			WASHER
32	J536 3122	1			BRACKET

MODEL CODES

16=Cherokee 2 Dr.(1981-83)
17=Cherokee 2 Dr.(1981-83)
73=Cherokee 2WD-2 Dr.(1984-86)
74=Cherokee 2WD-4 Dr.(1984-86)
18=Cherokee 4 Dr.(1981-83)
77=Cherokee 4WD-2 Dr.(1984-86)
78=Cherokee 4WD-4 Dr.(1984-86)
85=CJ-5 (1981-83)
86=CJ-6(1981)
87=CJ-7(1981-86)
88=CJ-8, Scrambler(1981-86)
64=Comanche 2WD-6 Ft. Box(1986)
66=Comanche 2WD-7 Ft. Box(1986)
63=Comanche 4WD-6 Ft. Box(1986)
65=Comanche 4WD-7 Ft. Box(1986)
15=Grand Wagoneer 4 Dr.(1984-86)
25=J-10 Truck 7 Ft. Box(1981-84)
26=J10 Truck 8 Ft. Box(1981-86)
27=J-20 Truck 8 Ft. Box(1981-86)
15=Wagoneer 4 Dr.(1981-83)
75=Wagoneer 4WD-4 Dr.(1984-86)

BODY
CJ=CJ-5, CJ-6, CJ-7, CJ-8, Scrambler(1981-86)
MJ=Comanche Pickup(1986)

STYLES
SJ=Wagoneer(1981-83), Grand Wagoneer(1984-86), Cherokee(1981-83), J-10, J-20(1981-86)
XJ=Wagoneer(1984-86), Cherokee(1984-86)

AR = Use as Required - = Non Illustrated Part P.A.R. = Paint as Required

« RETURN TO GROUP INDEX »

ENGINE MOUNTING SJ CHEROKEE, SJ WAGONEER, J10
Figure 9B-2900

81J56 2900

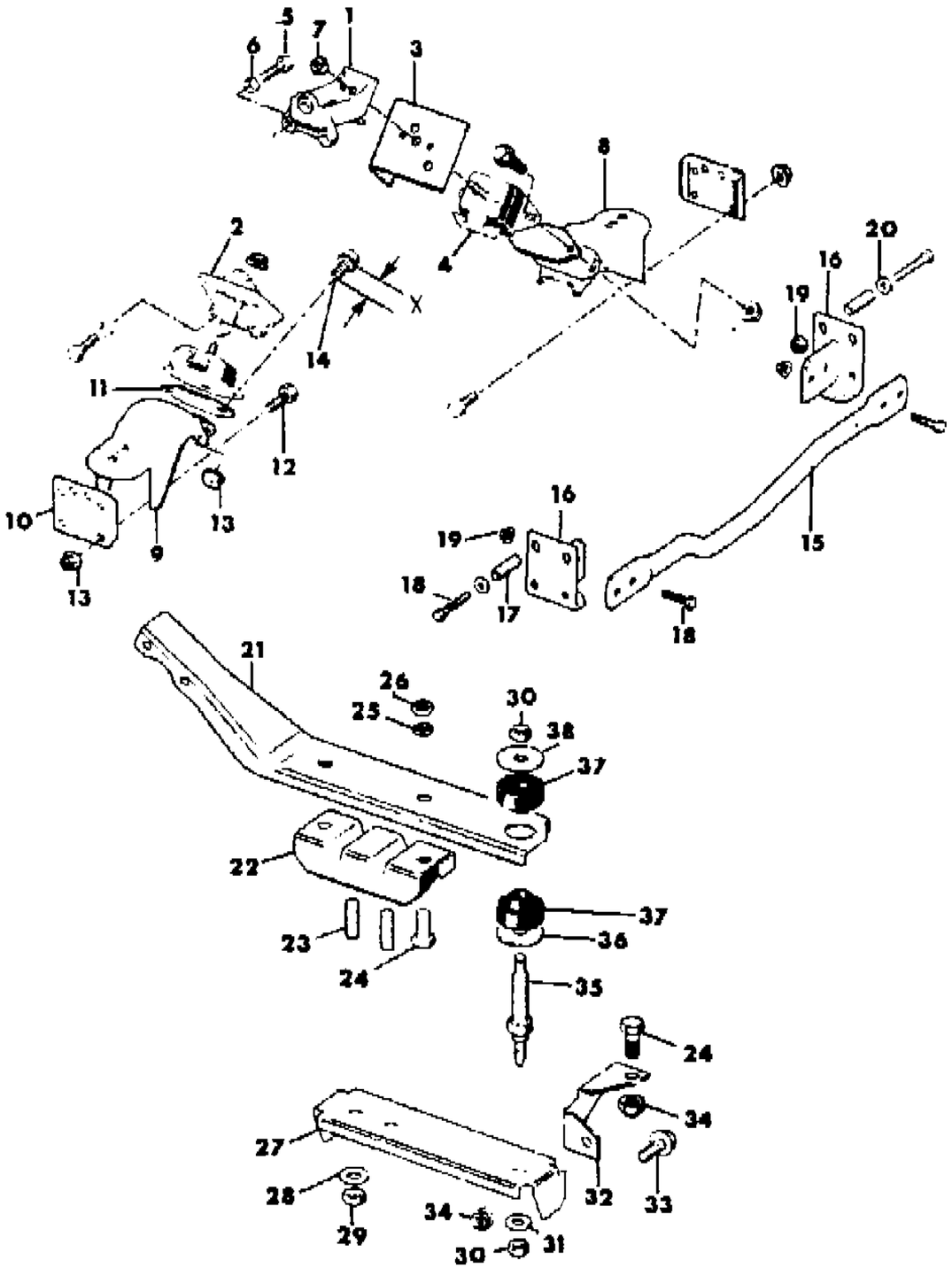

ITEM	PART NUMBER	QTY	BODY	MODEL	DESCRIPTION
33	J941 9856	1			BOLT
34	J400 3956	1			NUT
35	J535 8879	1			STUD
36	J094 1399	1			WASHER
37	J094 5266	2			INSULATOR
38	J094 5269	1			WASHER

MODEL CODES

16=Cherokee 2 Dr.(1981-83)
17=Cherokee 2 Dr.(1981-83)
73=Cherokee 2WD-2 Dr.(1984-86)
74=Cherokee 2WD-4 Dr.(1984-86)
18=Cherokee 4 Dr.(1981-83)
77=Cherokee 4WD-2 Dr.(1984-86)
78=Cherokee 4WD-4 Dr.(1984-86)
85=CJ-5 (1981-83)
86=CJ-6(1981)
87=CJ-7(1981-86)
88=CJ-8, Scrambler(1981-86)
64=Comanche 2WD-6 Ft. Box(1986)
66=Comanche 2WD-7 Ft. Box(1986)
63=Comanche 4WD-6 Ft. Box(1986)
65=Comanche 4WD-7 Ft. Box(1986)
15=Grand Wagoneer 4 Dr.(1984-86)
25=J-10 Truck 7 Ft. Box(1981-84)
26=J10 Truck 8 Ft. Box(1981-86)
27=J-20 Truck 8 Ft. Box(1981-86)
15=Wagoneer 4 Dr.(1981-83)
75=Wagoneer 4WD-4 Dr.(1984-86)

BODY
CJ=CJ-5, CJ-6, CJ-7, CJ-8, Scrambler(1981-86)
MJ=Comanche Pickup(1986)

STYLES
SJ=Wagoneer(1981-83), Grand Wagoneer(1984-86), Cherokee(1981-83), J-10, J-20(1981-86)
XJ=Wagoneer(1984-86), Cherokee(1984-86)

AR = Use as Required - = Non Illustrated Part P.A.R. = Paint as Required

« RETURN TO GROUP INDEX

ILLUSTRATION NOT AVAILABLE AT TIME OF PUBLICATION

GROUP 9C - ENGINE, 8 CYLINDER

ILLUSTRATION TITLE	GROUP-FIG. NO.
CJ 8 CYLINDER ENGINE, 1981	
ENGINE, EIGHT CYLINDER CJ-5,7	Fig. 9C-100
BLOCK, ENGINE CJ-5,7	Fig. 9C-200
GASKET SET CJ-5,7	Fig. 9C-300
CYLINDER HEAD CJ-5,7	Fig. 9C-400
CRANKSHAFT, FLYWHEEL AND PISTON CJ-5,7	Fig. 9C-500
CAMSHAFT AND VALVES CJ-5,7	Fig. 9C-600
TIMING COVER CJ-5,7	Fig. 9C-700
ENGINE OILING CJ-5,7	Fig. 9C-800
MANIFOLD, INTAKE AND EXHAUST CJ-5,7	Fig. 9C-900
ENGINE MOUNTING CJ-5,7	Fig. 9C-1000
SJ 8 CYLINDER	
ENGINE, EIGHT CYLINDER SJ CHEROKEE, SJ WAGONEER, J10, J20	Fig. 9C-1100
BLOCK, ENGINE SJ CHEROKEE, SJ WAGONEER, J10, J20	Fig. 9C-1200
GASKET SET SJ CHEROKEE, SJ WAGONEER, J10, J20	Fig. 9C-1300
CYLINDER HEAD SJ CHEROKEE, SJ WAGONEER, J10, J20	Fig. 9C-1400
CRANKSHAFT, FLYWHEEL AND PISTON SJ CHEROKEE, SJ WAGONEER J10, J20	Fig. 9C-1500
CAMSHAFT AND VALVES SJ CHEROKEE, SJ WAGONEER, J10, J20	Fig. 9C-1600
TIMING COVER SJ CHEROKEE, SJ WAGONEER, J10, J20	Fig. 9C-1700
ENGINE OILING SJ CHEROKEE, SJ WAGONEER, J10, J20	Fig. 9C-1800
MANIFOLD, INTAKE AND EXHAUST SJ CHEROKEE, SJ WAGONEER, J10, J20	Fig. 9C-1900
ENGINE MOUNTING SJ CHEROKEE, SJ WAGONEER, J10, J20	Fig. 9C-2000

ENGINE, EIGHT CYLINDER CJ-5,7
Figure 9C-100

81J09 100

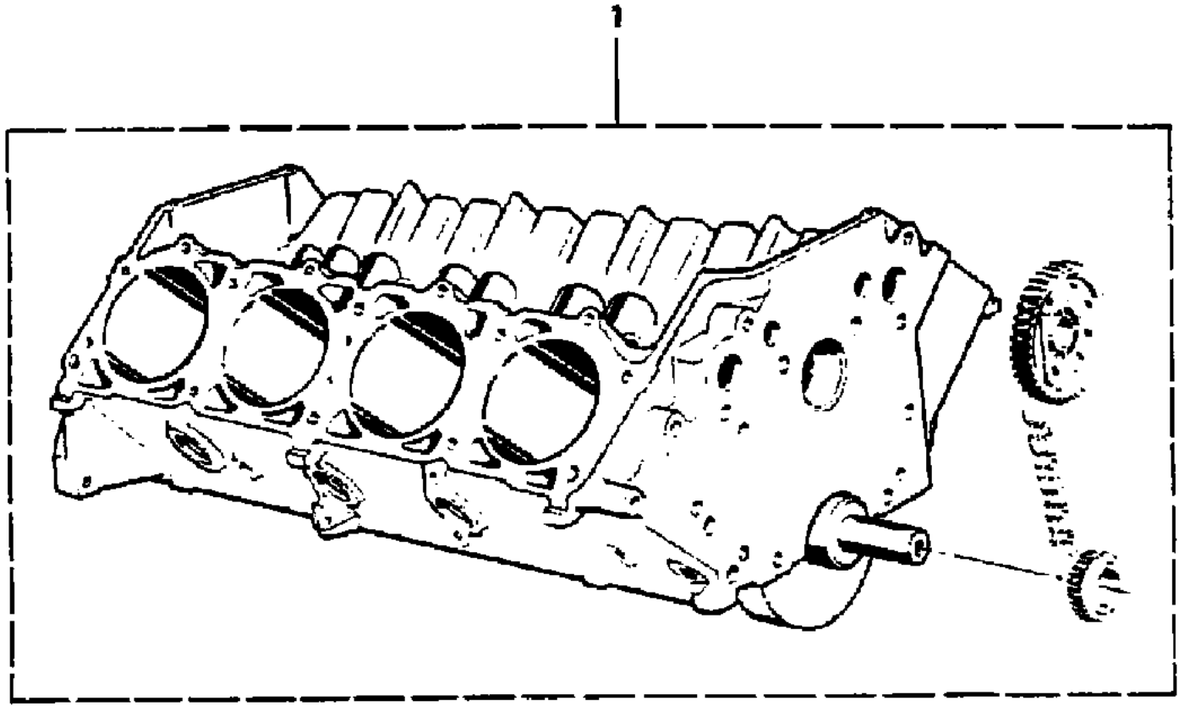

ITEM	PART NUMBER	QTY	BODY	MODEL	DESCRIPTION
1	J813 0670	1			ENGINE, Short, Without Camshaft

MODEL CODES
16=Cherokee 2 Dr.(1981-83)
17=Cherokee 2 Dr.(1981-83)
73=Cherokee 2WD-2 Dr.(1984-86)
74=Cherokee 2WD-4 Dr.(1984-86)
18=Cherokee 4 Dr.(1981-83)
77=Cherokee 4WD-2 Dr.(1984-86)
78=Cherokee 4WD-4 Dr.(1984-86)
85=CJ-5 (1981-83)
86=CJ-6(1981)
87=CJ-7(1981-86)
88=CJ-8, Scrambler(1981-86)
64=Comanche 2WD-6 Ft. Box(1986)
66=Comanche 2WD-7 Ft. Box(1986)
63=Comanche 4WD-6 Ft. Box(1986)
65=Comanche 4WD-7 Ft. Box(1986)
15=Grand Wagoneer 4 Dr.(1984-86)
25=J-10 Truck 7 Ft. Box(1981-84)
26=J10 Truck 8 Ft. Box(1981-86)
27=J-20 Truck 8 Ft. Box(1981-86)
15=Wagoneer 4 Dr.(1981-83)
75=Wagoneer 4WD-4 Dr.(1984-86)

BODY
CJ=CJ-5, CJ-6, CJ-7, CJ-8, Scrambler(1981-86)
MJ=Comanche Pickup(1986)

STYLES
SJ=Wagoneer(1981-83), Grand Wagoneer(1984-86), Cherokee(1981-83), J-10, J-20(1981-86)
XJ=Wagoneer(1984-86), Cherokee(1984-86)

AR = Use as Required - = Non Illustrated Part P.A.R. = Paint as Required

« RETURN TO GROUP INDEX

BLOCK, ENGINE CJ-5,7
Figure 9C-200

81J09 200

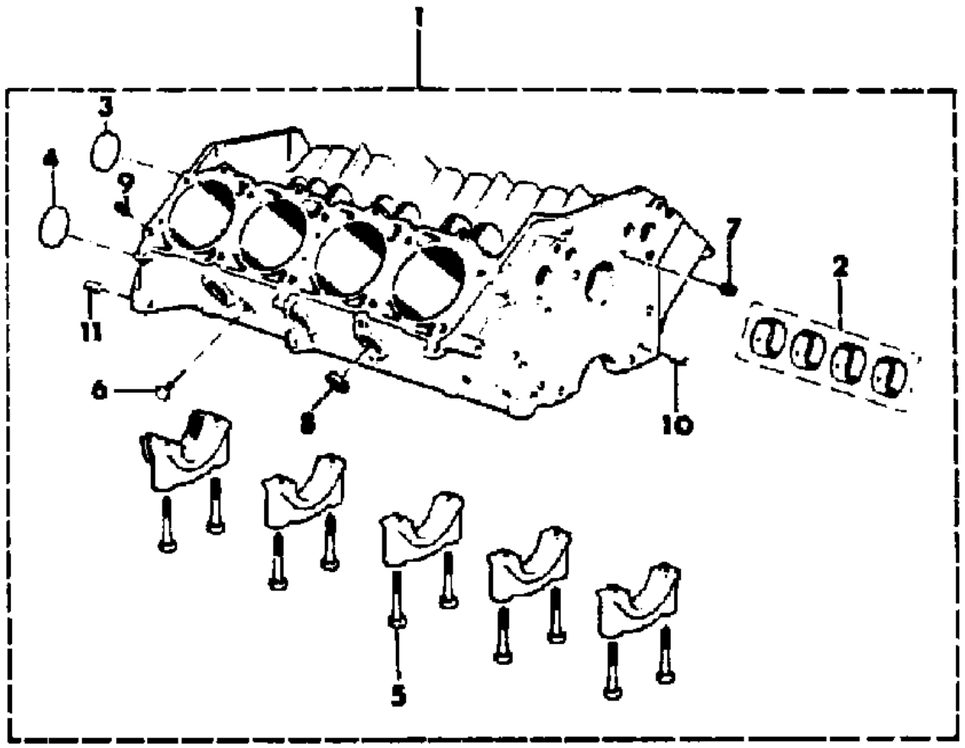

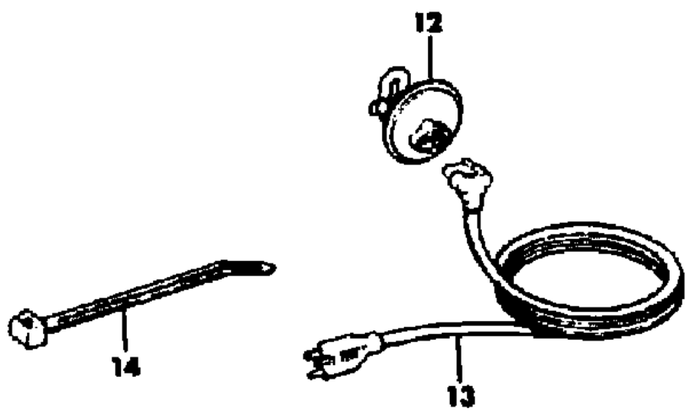

ITEM	PART NUMBER	QTY	BODY	MODEL	DESCRIPTION
1	J448 7211	1			BLOCK, Engine ***
2	J448 6286	1			BEARING KIT ***
3	J317 2313	1			PLUG
4	J400 6580	2			PLUG
5	J319 0891	10			BOLT
6	J044 4618	2			PLUG
7	J044 4660	6			PLUG
8	J314 4641	6			PLUG
9	J400 5149	4			PIN
10	J400 5307	2			PIN
11	J400 5148	2			PIN
12	J323 4035	1			HEATER, Engine Block
13	J323 2324	1			CORD, Power Supply
14					STRAP, Tie
	J323 3227	AR			200mm
	J369 3058	AR			300mm
	J323 0270	AR			350mm
	J323 5187	AR			450mm

MODEL CODES

16=Cherokee 2 Dr.(1981-83)
17=Cherokee 2 Dr.(1981-83)
73=Cherokee 2WD-2 Dr.(1984-86)
74=Cherokee 2WD-4 Dr.(1984-86)
18=Cherokee 4 Dr.(1981-83)
77=Cherokee 4WD-2 Dr.(1984-86)
78=Cherokee 4WD-4 Dr.(1984-86)
85=CJ-5 (1981-83)
86=CJ-6(1981)
87=CJ-7(1981-86)
88=CJ-8, Scrambler(1981-86)
64=Comanche 2WD-6 Ft. Box(1986)
66=Comanche 2WD-7 Ft. Box(1986)
63=Comanche 4WD-6 Ft. Box(1986)
65=Comanche 4WD-7 Ft. Box(1986)
15=Grand Wagoneer 4 Dr.(1984-86)
25=J-10 Truck 7 Ft. Box(1981-84)
26=J10 Truck 8 Ft. Box(1981-86)
27=J-20 Truck 8 Ft. Box(1981-86)
15=Wagoneer 4 Dr.(1981-83)
75=Wagoneer 4WD-4 Dr.(1984-86)

BODY
CJ=CJ-5, CJ-6, CJ-7, CJ-8, Scrambler(1981-86)
MJ=Comanche Pickup(1986)

STYLES
SJ=Wagoneer(1981-83), Grand Wagoneer(1984-86), Cherokee(1981-83), J-10, J-20(1981-86)
XJ=Wagoneer(1984-86), Cherokee(1984-86)

AR = Use as Required - = Non Illustrated Part P.A.R. = Paint as Required

« RETURN TO GROUP INDEX

GASKET SET CJ-5,7
Figure 9C-300

81J09 300

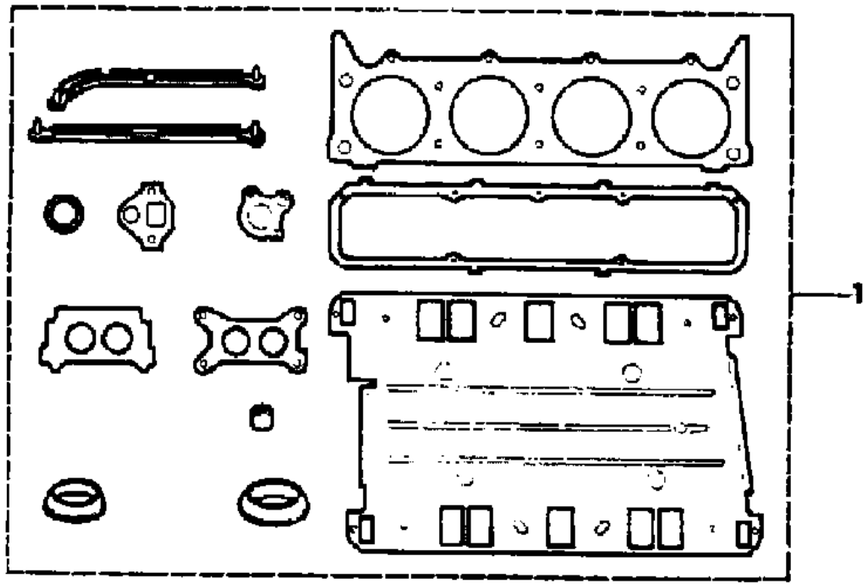

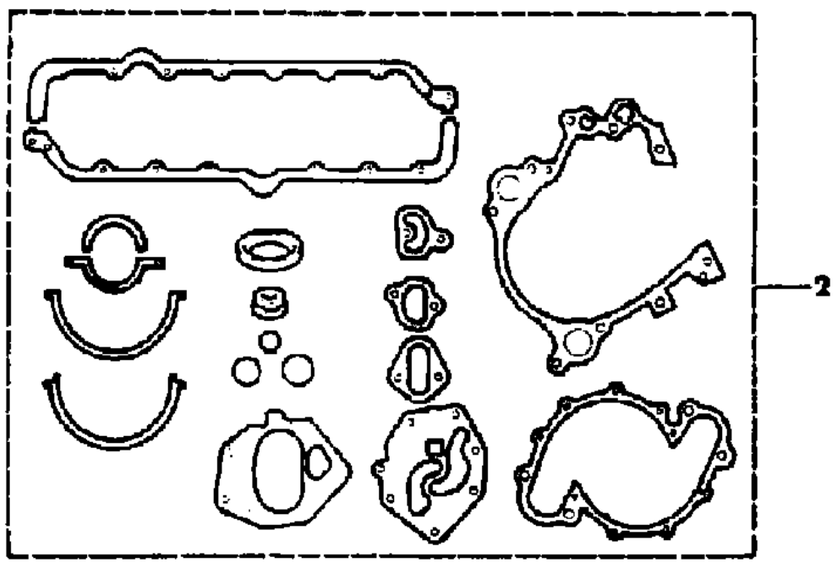

ITEM	PART NUMBER	QTY	BODY	MODEL	DESCRIPTION
1	J812 8191	1			GASKET PACKAGE, Engine Upper ***
2	J812 5727	1			GASKET PACKAGE, Engine Lower ***

MODEL CODES

16=Cherokee 2 Dr.(1981-83)
17=Cherokee 2 Dr.(1981-83)
73=Cherokee 2WD-2 Dr.(1984-86)
74=Cherokee 2WD-4 Dr.(1984-86)
18=Cherokee 4 Dr.(1981-83)
77=Cherokee 4WD-2 Dr.(1984-86)
78=Cherokee 4WD-4 Dr.(1984-86)
85=CJ-5 (1981-83)
86=CJ-6(1981)
87=CJ-7(1981-86)
88=CJ-8, Scrambler(1981-86)
64=Comanche 2WD-6 Ft. Box(1986)
66=Comanche 2WD-7 Ft. Box(1986)
63=Comanche 4WD-6 Ft. Box(1986)
65=Comanche 4WD-7 Ft. Box(1986)
15=Grand Wagoneer 4 Dr.(1984-86)
25=J-10 Truck 7 Ft. Box(1981-84)
26=J10 Truck 8 Ft. Box(1981-86)
27=J-20 Truck 8 Ft. Box(1981-86)
15=Wagoneer 4 Dr.(1981-83)
75=Wagoneer 4WD-4 Dr.(1984-86)

BODY
CJ=CJ-5, CJ-6, CJ-7, CJ-8, Scrambler(1981-86)
MJ=Comanche Pickup(1986)

STYLES
SJ=Wagoneer(1981-83), Grand Wagoneer(1984-86), Cherokee(1981-83), J-10, J-20(1981-86)
XJ=Wagoneer(1984-86), Cherokee(1984-86)

AR = Use as Required - = Non Illustrated Part P.A.R. = Paint as Required

« RETURN TO GROUP INDEX

CYLINDER HEAD CJ-5,7
Figure 9C-400

81J09 400

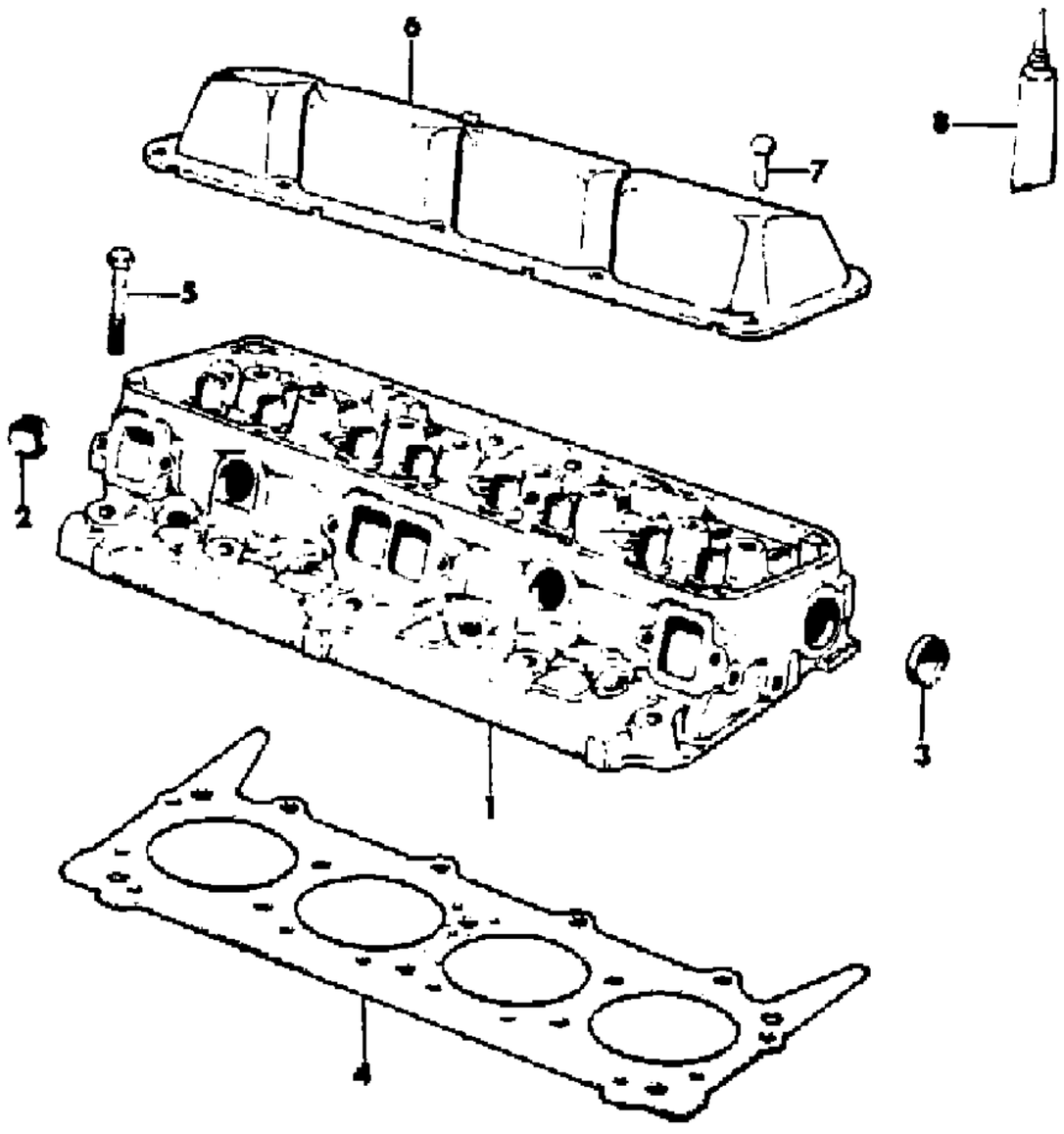

ITEM	PART NUMBER	QTY	BODY	MODEL	DESCRIPTION
1	J812 9669	2			HEAD, Engine Cylinder
2	J317 8449	2			PLUG
3	J314 4641	2			PLUG
4	J322 7352	2			GASKET
5					BOLT
	J319 4682	10			2.36"
	J319 4681	18			3.79"
6	J323 3719	2			COVER, Cylinder Head
7	J400 5731	14			BOLT
8	J899 3317	AR			SEALER ***

MODEL CODES

16=Cherokee 2 Dr.(1981-83)
17=Cherokee 2 Dr.(1981-83)
73=Cherokee 2WD-2 Dr.(1984-86)
74=Cherokee 2WD-4 Dr.(1984-86)
18=Cherokee 4 Dr.(1981-83)
77=Cherokee 4WD-2 Dr.(1984-86)
78=Cherokee 4WD-4 Dr.(1984-86)
85=CJ-5 (1981-83)
86=CJ-6(1981)
87=CJ-7(1981-86)
88=CJ-8, Scrambler(1981-86)
64=Comanche 2WD-6 Ft. Box(1986)
66=Comanche 2WD-7 Ft. Box(1986)
63=Comanche 4WD-6 Ft. Box(1986)
65=Comanche 4WD-7 Ft. Box(1986)
15=Grand Wagoneer 4 Dr.(1984-86)
25=J-10 Truck 7 Ft. Box(1981-84)
26=J10 Truck 8 Ft. Box(1981-86)
27=J-20 Truck 8 Ft. Box(1981-86)
15=Wagoneer 4 Dr.(1981-83)
75=Wagoneer 4WD-4 Dr.(1984-86)

BODY
CJ=CJ-5, CJ-6, CJ-7, CJ-8, Scrambler(1981-86)
MJ=Comanche Pickup(1986)

STYLES
SJ=Wagoneer(1981-83), Grand Wagoneer(1984-86), Cherokee(1981-83), J-10, J-20(1981-86)
XJ=Wagoneer(1984-86), Cherokee(1984-86)

AR = Use as Required - = Non Illustrated Part P.A.R. = Paint as Required

« RETURN TO GROUP INDEX

CRANKSHAFT, FLYWHEEL AND PISTON CJ-5,7
Figure 9C-500

81J09 500

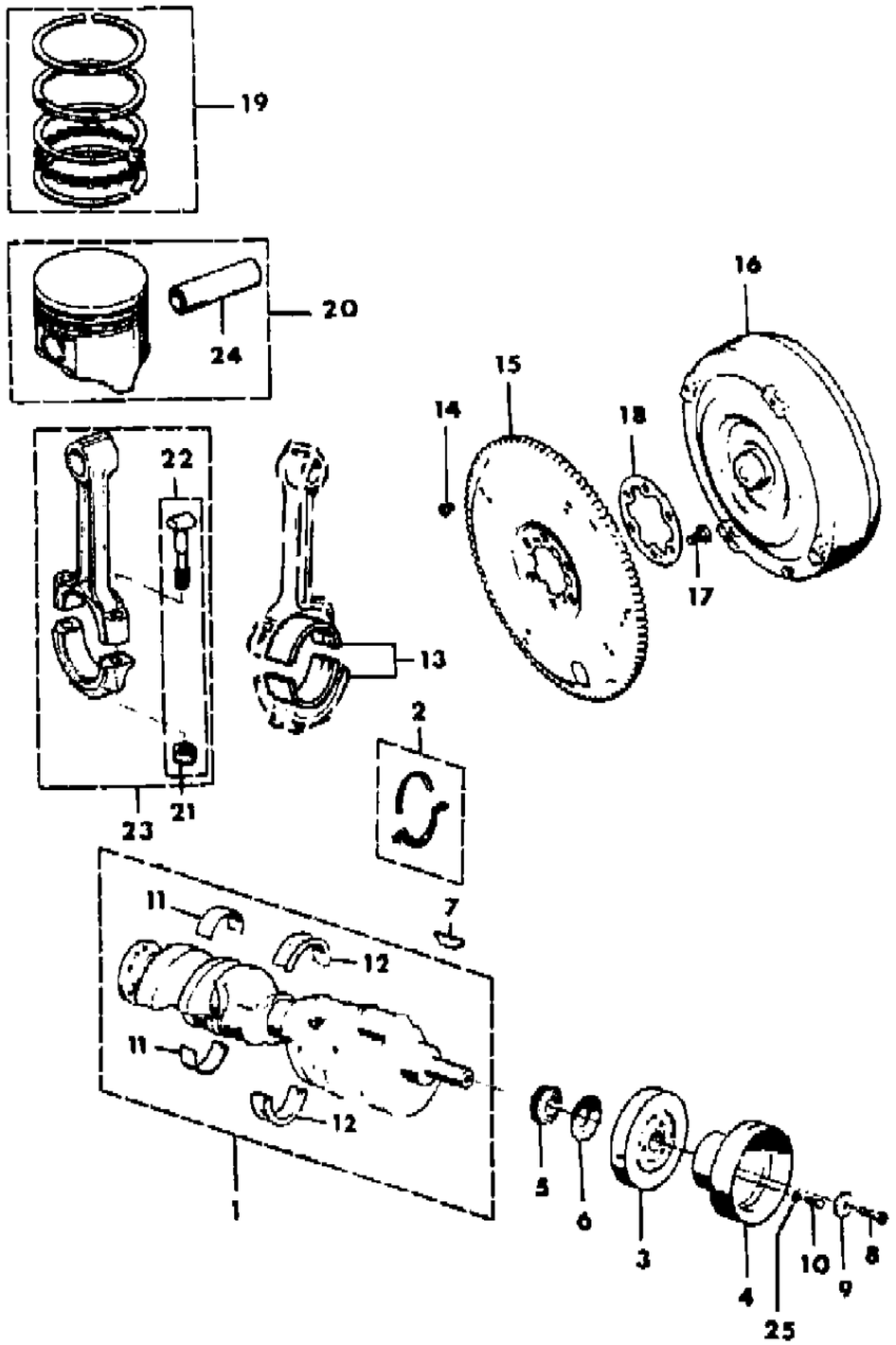

ITEM	PART NUMBER	QTY	BODY	MODEL	DESCRIPTION
1	J812 5451	1			CRANKSHAFT, Package
2	J320 6691	1			SEAL PACKAGE ***
3	J323 0130	1			DAMPER
4	J322 7671	1			PULLEY ***
5					SPROCKET, Crankshaft
	J323 4235	1			.50"
	J322 3199	1			.62"
6	J318 0205	1			SLINGER, Oil ***
7	J322 9831	1			KEY
8	J400 5748	1			BOLT
9	J323 0155	1			WASHER
10	J018 0123	4			BOLT
11					BEARING PACKAGE
	J812 5928	4			Standard
	J812 5929	4			-.001"
	J812 5930	4			-.002"
	J812 5931	4			-.010"
	J812 5932	4			-.012"
12					BEARING PACKAGE
	J812 5933	1			Standard
	J812 5934	1			-.001"
	J812 5935	1			-.002"
	J812 5936	1			-.010"
	J812 5937	1			-.012"
13					BEARING PACKAGE
	J812 6204	8			Standard
	J812 6205	8			-.001"
	J812 6206	8			-.002"
	J812 6207	8			-.010"
	J812 6208	8			-.012"
14	J321 4097	4			BOLT
15	J323 2138	1			PLATE, Converter Drive
16					CONVERTER, Transmission
	J813 2569	1			EXPORT
	JR77 5035	1			Remanufactured
17	J315 1407	AR			BOLT
18	J321 4094	1			REINFORCEMENT
19					RING PACKAGE, Piston ***
					Standard

MODEL CODES

16=Cherokee 2 Dr.(1981-83)
17=Cherokee 2 Dr.(1981-83)
73=Cherokee 2WD-2 Dr.(1984-86)
74=Cherokee 2WD-4 Dr.(1984-86)
18=Cherokee 4 Dr.(1981-83)
77=Cherokee 4WD-2 Dr.(1984-86)
78=Cherokee 4WD-4 Dr.(1984-86)
85=CJ-5 (1981-83)
86=CJ-6(1981)
87=CJ-7(1981-86)
88=CJ-8, Scrambler(1981-86)
64=Comanche 2WD-6 Ft. Box(1986)
66=Comanche 2WD-7 Ft. Box(1986)
63=Comanche 4WD-6 Ft. Box(1986)
65=Comanche 4WD-7 Ft. Box(1986)
15=Grand Wagoneer 4 Dr.(1984-86)
25=J-10 Truck 7 Ft. Box(1981-84)
26=J10 Truck 8 Ft. Box(1981-86)
27=J-20 Truck 8 Ft. Box(1981-86)
15=Wagoneer 4 Dr.(1981-83)
75=Wagoneer 4WD-4 Dr.(1984-86)

BODY
CJ=CJ-5, CJ-6, CJ-7, CJ-8, Scrambler(1981-86)
MJ=Comanche Pickup(1986)

STYLES
SJ=Wagoneer(1981-83), Grand Wagoneer(1984-86), Cherokee(1981-83), J-10, J-20(1981-86)
XJ=Wagoneer(1984-86), Cherokee(1984-86)

AR = Use as Required - = Non Illustrated Part P.A.R. = Paint as Required

« RETURN TO GROUP INDEX »

CRANKSHAFT, FLYWHEEL AND PISTON CJ-5,7
Figure 9C-500

81J09 500

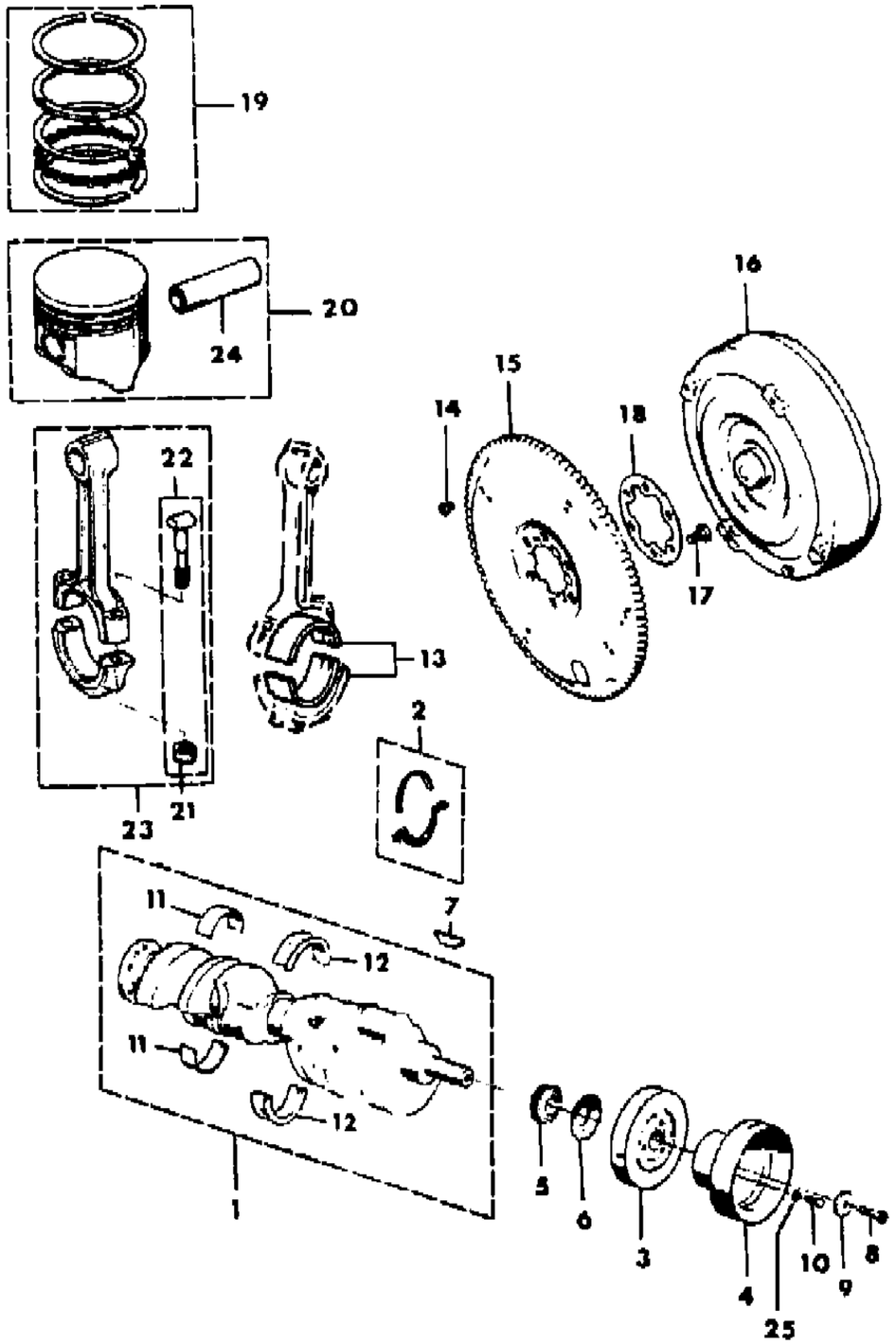

ITEM	PART NUMBER	QTY	BODY	MODEL	DESCRIPTION
	J320 7456	1			Sealed Power
	J320 7514	1			Perfect Circle
	J812 1685	1			TRW
					RING PACKAGE, Piston ***
					+.010"
	J320 7823	1			Sealed Power
	J812 1686	1			TRW
20					PISTON PACKAGE ***
	J448 7564	8			Standard
	J448 7565	8			+.010"
21	J314 9556	16			NUT
22	J448 6626	16			BOLT PACKAGE ***
23	J319 6750	8			ROD, Connecting, Coded "707"
24					PIN, Piston
	J318 0843	8			Standard
	8350 0303	8			+.003"
	8350 0304	8			+.005"
25	J012 0382	AR			WASHER
26	3300 4041	1			BUSHING, Pilot w/man tran

MODEL CODES

16=Cherokee 2 Dr.(1981-83)
17=Cherokee 2 Dr.(1981-83)
73=Cherokee 2WD-2 Dr.(1984-86)
74=Cherokee 2WD-4 Dr.(1984-86)
18=Cherokee 4 Dr.(1981-83)
77=Cherokee 4WD-2 Dr.(1984-86)
78=Cherokee 4WD-4 Dr.(1984-86)
85=CJ-5 (1981-83)
86=CJ-6(1981)
87=CJ-7(1981-86)
88=CJ-8, Scrambler(1981-86)
64=Comanche 2WD-6 Ft. Box(1986)
66=Comanche 2WD-7 Ft. Box(1986)
63=Comanche 4WD-6 Ft. Box(1986)
65=Comanche 4WD-7 Ft. Box(1986)
15=Grand Wagoneer 4 Dr.(1984-86)
25=J-10 Truck 7 Ft. Box(1981-84)
26=J10 Truck 8 Ft. Box(1981-86)
27=J-20 Truck 8 Ft. Box(1981-86)
15=Wagoneer 4 Dr.(1981-83)
75=Wagoneer 4WD-4 Dr.(1984-86)

BODY
CJ=CJ-5, CJ-6, CJ-7, CJ-8, Scrambler(1981-86)
MJ=Comanche Pickup(1986)

STYLES
SJ=Wagoneer(1981-83), Grand Wagoneer(1984-86), Cherokee(1981-83), J-10, J-20(1981-86)
XJ=Wagoneer(1984-86), Cherokee(1984-86)

AR = Use as Required - = Non Illustrated Part P.A.R. = Paint as Required

CAMSHAFT AND VALVES CJ-5,7
Figure 9C-600

81J09 600

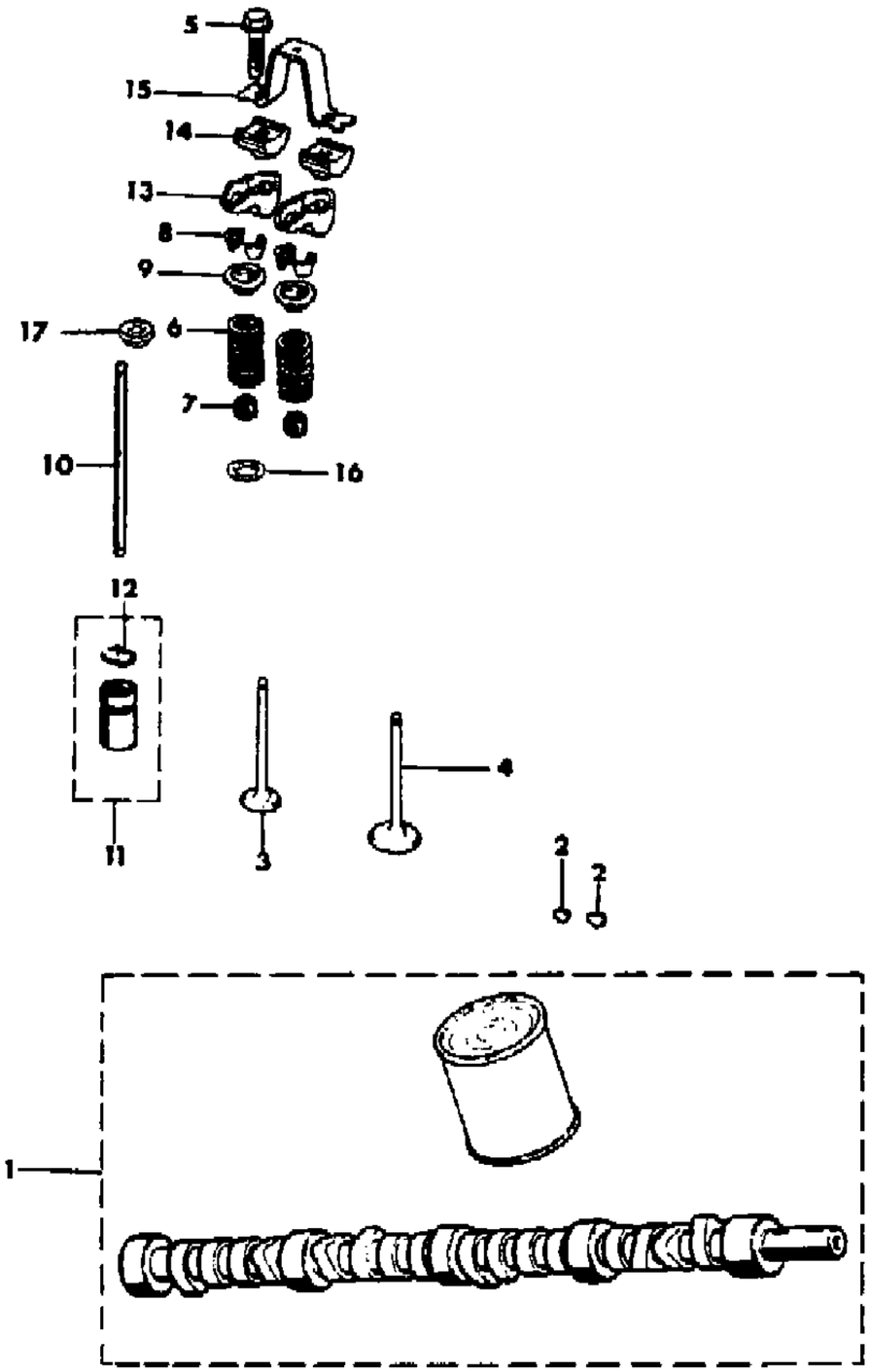

ITEM	PART NUMBER	QTY	BODY	MODEL	DESCRIPTION
1	J812 9668	1			CAMSHAFT
2	J012 4546	2			KEY
3	J323 7464	8			VALVE, Exhaust, Standard
4	J323 7465	8			VALVE, Intake, Standard
5	J812 0512	16			BOLT
6	J322 8192	16			SPRING
7	J321 8976	16			DEFLECTOR ***
8	J318 0458	32			KEEPER ***
9	J323 7482	16			RETAINER
10	J321 4014	16			PUSHROD ***
11	J322 2276	16			TAPPET
12	J644 0614	16			RING
13	J322 3539	16			ARM, Valve Rocker
14	J323 5090	16			PIVOT
15	J323 6513	8			BRIDGE ***
16	J322 3898	AR			SEAT, Valve Spring ***
17	J321 9895	AR			ROTATOR

MODEL CODES

16=Cherokee 2 Dr.(1981-83)
17=Cherokee 2 Dr.(1981-83)
73=Cherokee 2WD-2 Dr.(1984-86)
74=Cherokee 2WD-4 Dr.(1984-86)
18=Cherokee 4 Dr.(1981-83)
77=Cherokee 4WD-2 Dr.(1984-86)
78=Cherokee 4WD-4 Dr.(1984-86)
85=CJ-5 (1981-83)
86=CJ-6(1981)
87=CJ-7(1981-86)
88=CJ-8, Scrambler(1981-86)
64=Comanche 2WD-6 Ft. Box(1986)
66=Comanche 2WD-7 Ft. Box(1986)
63=Comanche 4WD-6 Ft. Box(1986)
65=Comanche 4WD-7 Ft. Box(1986)
15=Grand Wagoneer 4 Dr.(1984-86)
25=J-10 Truck 7 Ft. Box(1981-84)
26=J10 Truck 8 Ft. Box(1981-86)
27=J-20 Truck 8 Ft. Box(1981-86)
15=Wagoneer 4 Dr.(1981-83)
75=Wagoneer 4WD-4 Dr.(1984-86)

BODY
CJ=CJ-5, CJ-6, CJ-7, CJ-8, Scrambler(1981-86)
MJ=Comanche Pickup(1986)

STYLES
SJ=Wagoneer(1981-83), Grand Wagoneer(1984-86), Cherokee(1981-83), J-10, J-20(1981-86)
XJ=Wagoneer(1984-86), Cherokee(1984-86)

AR = Use as Required - = Non Illustrated Part P.A.R. = Paint as Required

« RETURN TO GROUP INDEX

TIMING COVER CJ-5,7
Figure 9C-700

81J09 700

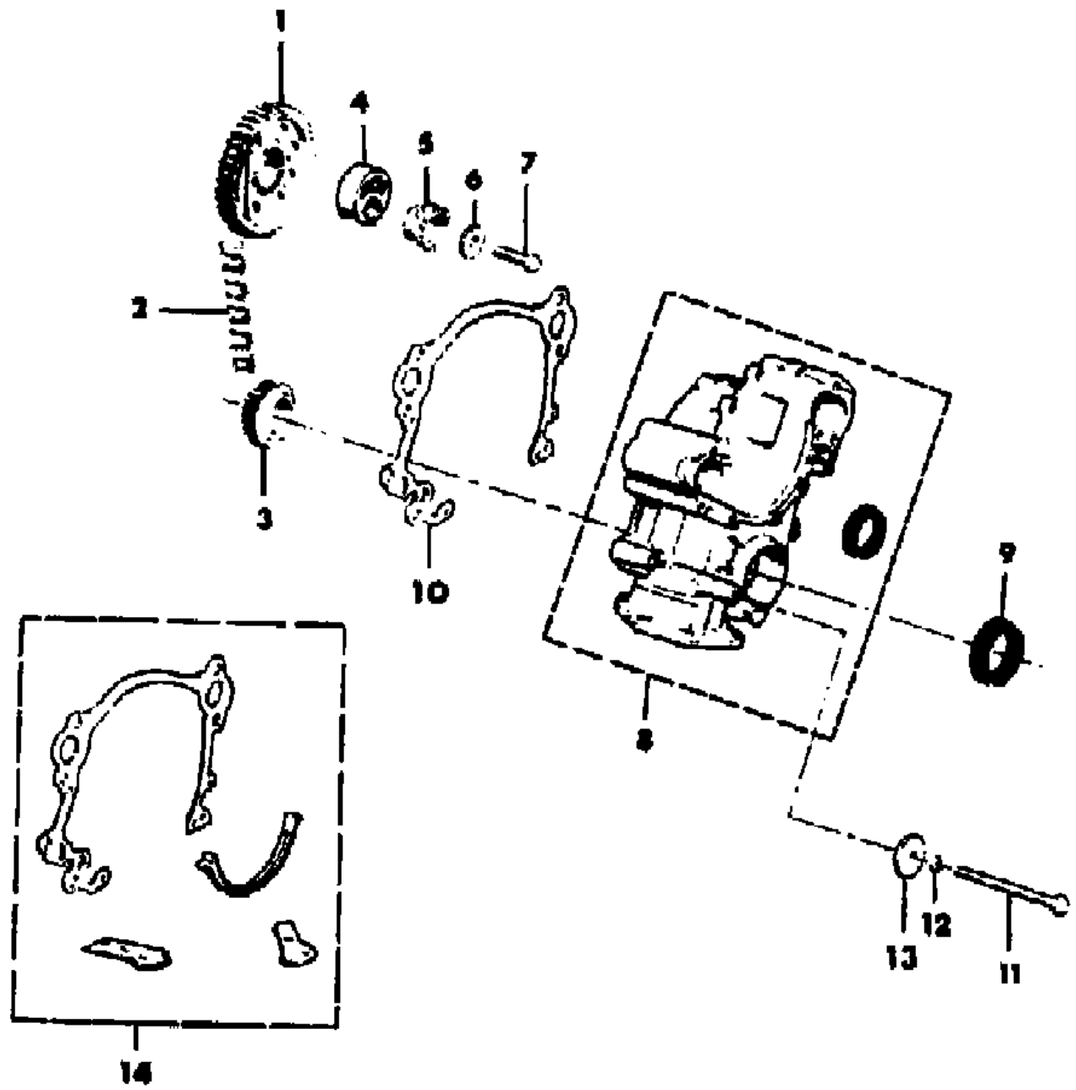

ITEM	PART NUMBER	QTY	BODY	MODEL	DESCRIPTION
1					SPROCKET, Camshaft
	J323 4234	1			.50" Wide
	J319 7138	1			.62" Wide
2					CHAIN, Timing
	J323 4433	1			.50" Wide Sprocket
	J813 4343	1			.62" Wide Sprocket
3					SPROCKET, Crankshaft
	J323 4235	1			.50" Wide
	J322 3199	1			.62" Wide
4	J321 8314	1			ECCENTRIC, Fuel Pump
5	J319 4007	1			GEAR, Distributor
6	J318 9338	1			SPACER
7	J019 2353	1			BOLT
8	J812 9333	1			COVER
9	J319 3613	1			SEAL
10	J318 0216	1			GASKET, Timing Cover
11					BOLT
	J017 9844	2			1.62"
	J018 6276	2			2.12"
	J018 9303	2			3.12"
12	J400 3803	4			WASHER, Lock
13	J400 1102	4			WASHER, Plain
14	J812 9098	1			GASKET PACKAGE, Timing ***

MODEL CODES

16=Cherokee 2 Dr.(1981-83)
17=Cherokee 2 Dr.(1981-83)
73=Cherokee 2WD-2 Dr.(1984-86)
74=Cherokee 2WD-4 Dr.(1984-86)
18=Cherokee 4 Dr.(1981-83)
77=Cherokee 4WD-2 Dr.(1984-86)
78=Cherokee 4WD-4 Dr.(1984-86)
85=CJ-5 (1981-83)
86=CJ-6(1981)
87=CJ-7(1981-86)
88=CJ-8, Scrambler(1981-86)
64=Comanche 2WD-6 Ft. Box(1986)
66=Comanche 2WD-7 Ft. Box(1986)
63=Comanche 4WD-6 Ft. Box(1986)
65=Comanche 4WD-7 Ft. Box(1986)
15=Grand Wagoneer 4 Dr.(1984-86)
25=J-10 Truck 7 Ft. Box(1981-84)
26=J10 Truck 8 Ft. Box(1981-86)
27=J-20 Truck 8 Ft. Box(1981-86)
15=Wagoneer 4 Dr.(1981-83)
75=Wagoneer 4WD-4 Dr.(1984-86)

BODY
CJ=CJ-5, CJ-6, CJ-7, CJ-8, Scrambler(1981-86)
MJ=Comanche Pickup(1986)

STYLES
SJ=Wagoneer(1981-83), Grand Wagoneer(1984-86), Cherokee(1981-83), J-10, J-20(1981-86)
XJ=Wagoneer(1984-86), Cherokee(1984-86)

AR = Use as Required - = Non Illustrated Part P.A.R. = Paint as Required

« RETURN TO GROUP INDEX

ENGINE OILING CJ-5,7
Figure 9C-800

81J09 800

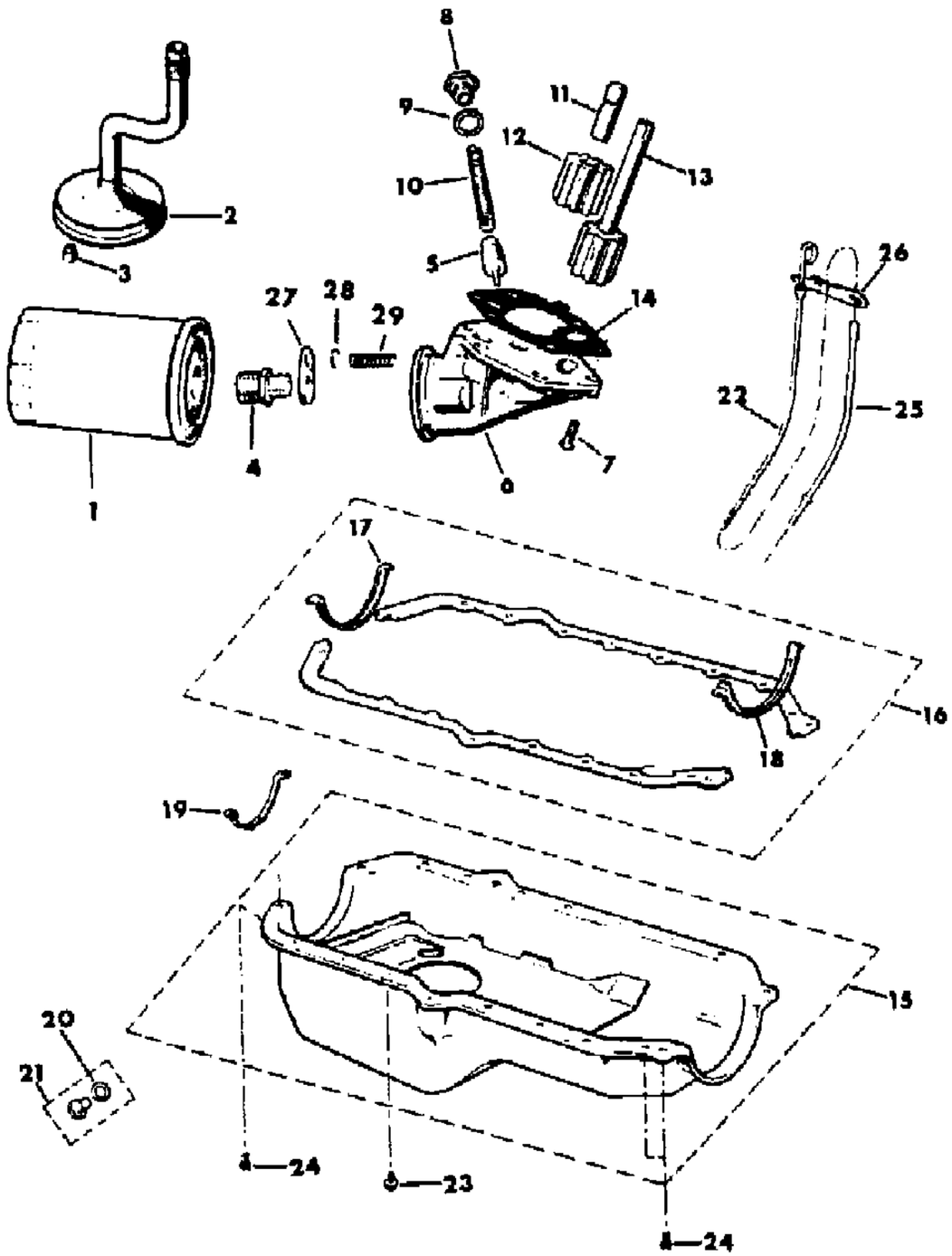

ITEM	PART NUMBER	QTY	BODY	MODEL	DESCRIPTION
1	J899 3146	1			FILTER, Engine Oil
2	J321 6049	1			TUBE, Oil Pump Inlet
3	J316 7541	1			SPACER
4	3300 3538	1			CONNECTOR
5					PLUNGER
	J318 8661	1			Standard
	J324 1676	1			+.010"
6	J322 6242	1			COVER, Oil Pump
7	J017 9796	7			BOLT
8	J312 4735	1			CAP
9	J310 5561	1			GASKET
10	J323 3994	1			SPRING
11	J318 0209	1			SHAFT
12	J319 6842	1			GEAR, Oil Pump Driven
13	J318 2698	1			GEAR, Drive
14	J322 6241	1			GASKET, Cover
15	J323 6322	1			PAN, Engine Oil
16	J320 6690	1			GASKET, Package
17	3300 4733	1			SEAL
18	J318 0414	1			SEAL
19	J324 3116	1			SUPPORT
20	J317 0271	1			SEAL
21					PLUG PACKAGE, Oil Drain
	J812 1449	1			Non-Magnetic
	J320 6696	1			Magnetic
22	J322 4880	1			INDICATOR, Engine Oil Lever
23	J400 6296	14			SCREW
24	J400 6909	6			SCREW
25	J319 0848	1			TUBE, Engine Oil Indicator
26	J321 5161	1			BRACKET
27	J317 3225	1			RETAINER
28	J317 3203	1			VALUE ***
29	J317 3224	1			SPRING

MODEL CODES

16=Cherokee 2 Dr.(1981-83)
17=Cherokee 2 Dr.(1981-83)
73=Cherokee 2WD-2 Dr.(1984-86)
74=Cherokee 2WD-4 Dr.(1984-86)
18=Cherokee 4 Dr.(1981-83)
77=Cherokee 4WD-2 Dr.(1984-86)
78=Cherokee 4WD-4 Dr.(1984-86)
85=CJ-5 (1981-83)
86=CJ-6(1981)
87=CJ-7(1981-86)
88=CJ-8, Scrambler(1981-86)
64=Comanche 2WD-6 Ft. Box(1986)
66=Comanche 2WD-7 Ft. Box(1986)
63=Comanche 4WD-6 Ft. Box(1986)
65=Comanche 4WD-7 Ft. Box(1986)
15=Grand Wagoneer 4 Dr.(1984-86)
25=J-10 Truck 7 Ft. Box(1981-84)
26=J10 Truck 8 Ft. Box(1981-86)
27=J-20 Truck 8 Ft. Box(1981-86)
15=Wagoneer 4 Dr.(1981-83)
75=Wagoneer 4WD-4 Dr.(1984-86)

BODY
CJ=CJ-5, CJ-6, CJ-7, CJ-8, Scrambler(1981-86)
MJ=Comanche Pickup(1986)

STYLES
SJ=Wagoneer(1981-83), Grand Wagoneer(1984-86), Cherokee(1981-83), J-10, J-20(1981-86)
XJ=Wagoneer(1984-86), Cherokee(1984-86)

AR = Use as Required - = Non Illustrated Part P.A.R. = Paint as Required

« RETURN TO GROUP INDEX

MANIFOLD, INTAKE AND EXHAUST CJ-5,7
Figure 9C-900

81J09 900

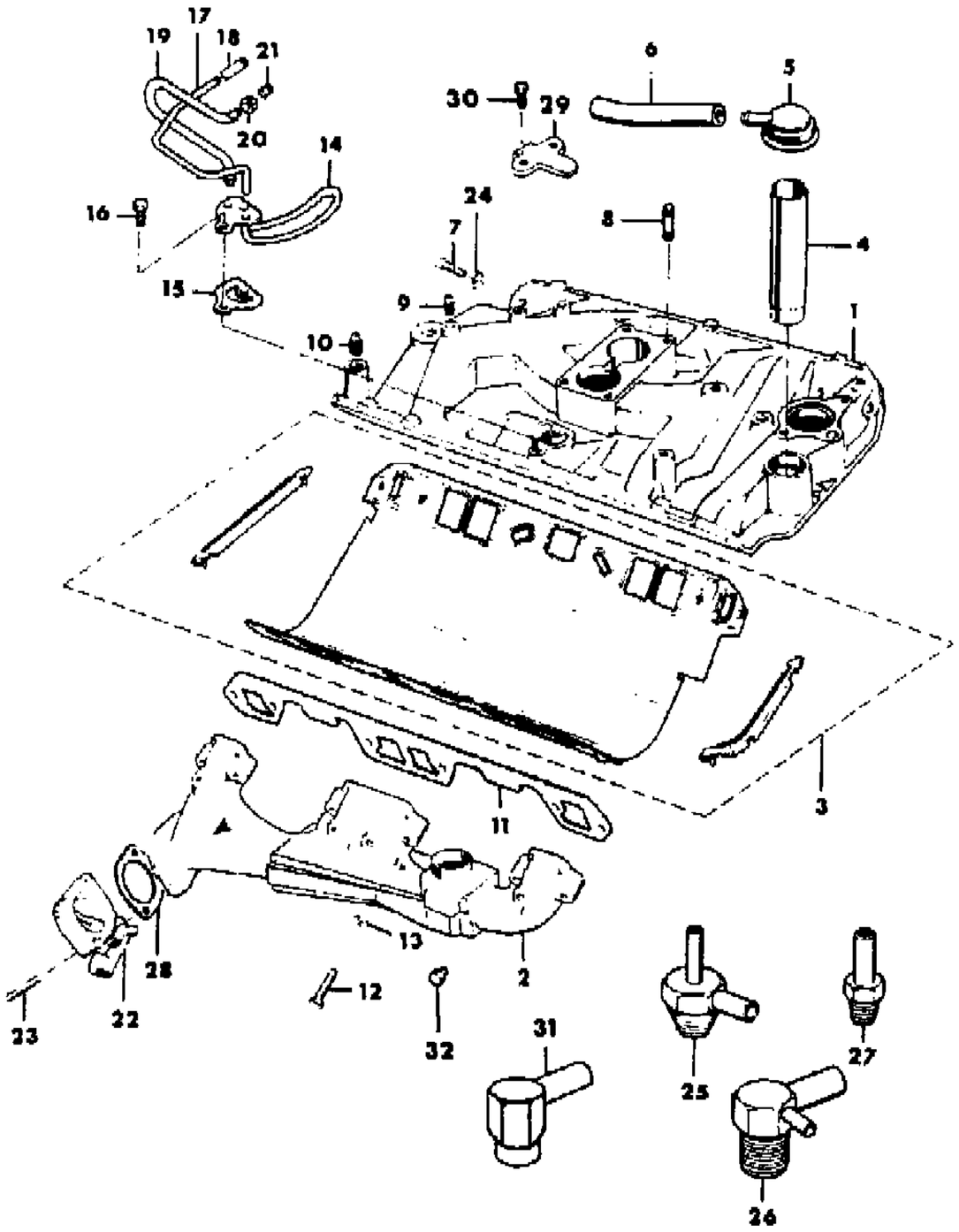

ITEM	PART NUMBER	QTY	BODY	MODEL	DESCRIPTION
1	J813 0210	1			MANIFOLD, Intake
2					MANIFOLD, Exhaust
	J812 2442	1			Left
	J812 1274	1			Right
3	J812 5869	1			GASKET PACKAGE, Manifold ***
4	J319 8950	1			TUBE, Oil Filler
5	J322 0248	1			CAP, Oil Filler
6	J812 5841	AR			HOSE, Bulk
7	J999 8055	12			BOLT
8	J019 2423	4			STUD
9	J010 3877	AR			PLUG
10	J044 4660	AR			PLUG
11	J323 7270	2			GASKET
12					BOLT
	J400 4538	4			.38"
	J400 6311	8			.31"
13					WASHER
	J400 3938	4			.38"
	J400 6292	8			.31"
14	J322 0181	1			TUBE
15	J321 8215	1			GASKET
16	J400 6297	2			SCREW
17	J323 0266	1			TUBE, Clean Air
18	J812 5813	AR			HOSE, Bulk
19	J323 9811	1			TUBE, Heat
20	J011 4627	1			NUT
21	J011 4628	1			SLEEVE
22	J323 8998	1			DAMPER
23					STUD
	J400 4110	1			Left
	J400 4109	1			Right
24	J400 3938	12			WASHER
25	J322 5447	1			FITTING ***
26	J321 6512	1			FITTING ***
27	5300 2726	1			FITTING ***
28	J535 3073	1			GASKET
29	J321 9665	1			COVER, EGR Port
30	J027 3573	2			BOLT
31	J319 8347	1			ELBOW, Vacuum, Intake Manifold

MODEL CODES

16=Cherokee 2 Dr.(1981-83)
17=Cherokee 2 Dr.(1981-83)
73=Cherokee 2WD-2 Dr.(1984-86)
74=Cherokee 2WD-4 Dr.(1984-86)
18=Cherokee 4 Dr.(1981-83)
77=Cherokee 4WD-2 Dr.(1984-86)
78=Cherokee 4WD-4 Dr.(1984-86)
85=CJ-5 (1981-83)
86=CJ-6(1981)
87=CJ-7(1981-86)
88=CJ-8, Scrambler(1981-86)
64=Comanche 2WD-6 Ft. Box(1986)
66=Comanche 2WD-7 Ft. Box(1986)
63=Comanche 4WD-6 Ft. Box(1986)
65=Comanche 4WD-7 Ft. Box(1986)
15=Grand Wagoneer 4 Dr.(1984-86)
25=J-10 Truck 7 Ft. Box(1981-84)
26=J10 Truck 8 Ft. Box(1981-86)
27=J-20 Truck 8 Ft. Box(1981-86)
15=Wagoneer 4 Dr.(1981-83)
75=Wagoneer 4WD-4 Dr.(1984-86)

BODY
CJ=CJ-5, CJ-6, CJ-7, CJ-8, Scrambler(1981-86)
MJ=Comanche Pickup(1986)

STYLES
SJ=Wagoneer(1981-83), Grand Wagoneer(1984-86), Cherokee(1981-83), J-10, J-20(1981-86)
XJ=Wagoneer(1984-86), Cherokee(1984-86)

AR = Use as Required - = Non Illustrated Part P.A.R. = Paint as Required

« RETURN TO GROUP INDEX »

MANIFOLD, INTAKE AND EXHAUST CJ-5,7
Figure 9C-900

81J09 900

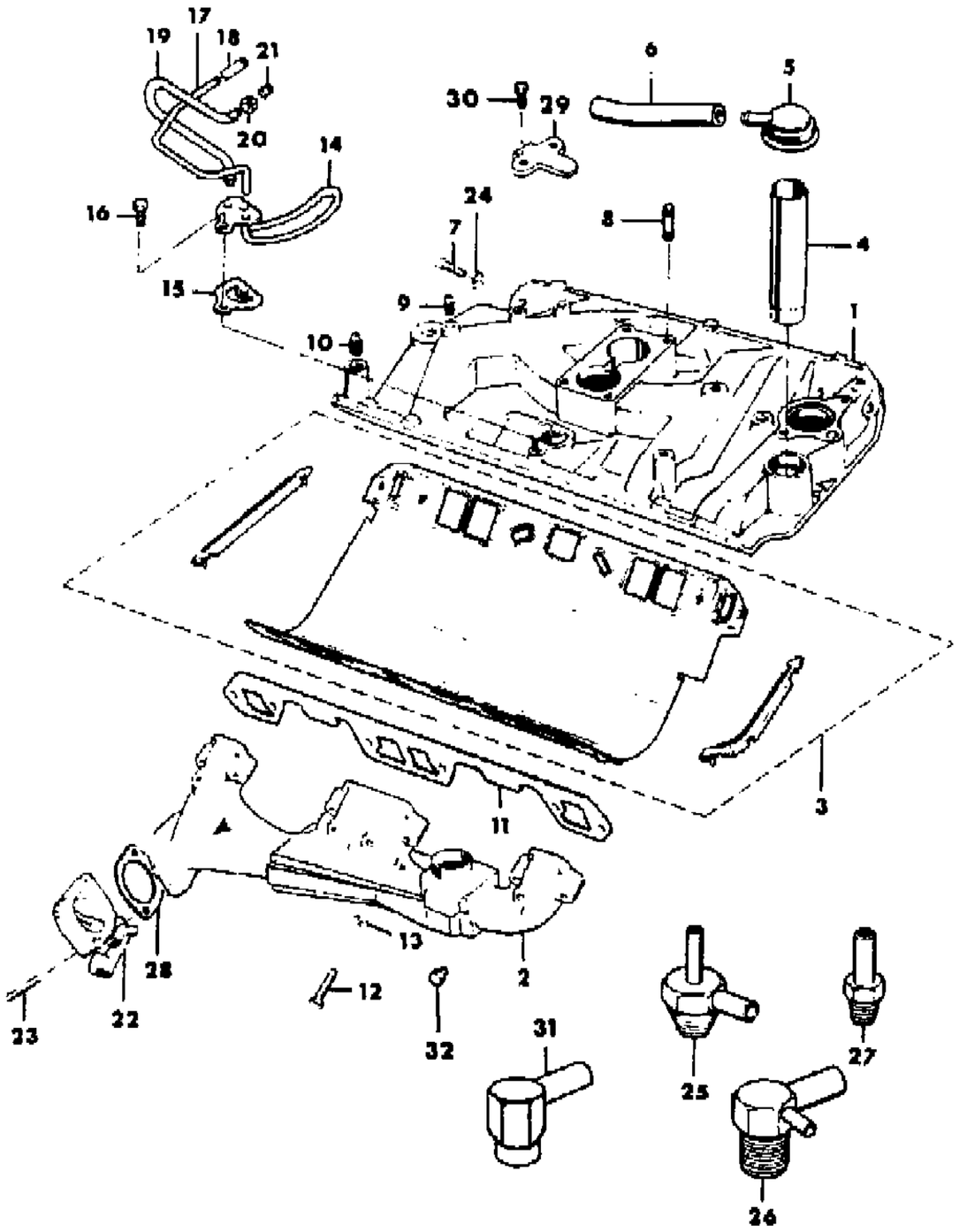

ITEM	PART NUMBER	QTY	BODY	MODEL	DESCRIPTION
32	J321 4061	AR			PLUG, EXPORT

MODEL CODES

16=Cherokee 2 Dr.(1981-83)	78=Cherokee 4WD-4 Dr.(1984-86)	64=Comanche 2WD-6 Ft. Box(1986)	25=J-10 Truck 7 Ft. Box(1981-84)
17=Cherokee 2 Dr.(1981-83)	85=CJ-5 (1981-83)	66=Comanche 2WD-7 Ft. Box(1986)	26=J10 Truck 8 Ft. Box(1981-86)
73=Cherokee 2WD-2 Dr.(1984-86)	86=CJ-6(1981)	63=Comanche 4WD-6 Ft. Box(1986)	27=J-20 Truck 8 Ft. Box(1981-86)
74=Cherokee 2WD-4 Dr.(1984-86)	87=CJ-7(1981-86)	65=Comanche 4WD-7 Ft. Box(1986)	15=Wagoneer 4 Dr.(1981-83)
18=Cherokee 4 Dr.(1981-83)	88=CJ-8, Scrambler(1981-86)	15=Grand Wagoneer 4 Dr.(1984-86)	75=Wagoneer 4WD-4 Dr.(1984-86)
77=Cherokee 4WD-2 Dr.(1984-86)			

BODY
CJ=CJ-5, CJ-6, CJ-7, CJ-8, Scrambler(1981-86)
MJ=Comanche Pickup(1986)

STYLES
SJ=Wagoneer(1981-83), Grand Wagoneer(1984-86), Cherokee(1981-83), J-10, J-20(1981-86)
XJ=Wagoneer(1984-86), Cherokee(1984-86)

AR = Use as Required - = Non Illustrated Part P.A.R. = Paint as Required

« RETURN TO GROUP INDEX

ENGINE MOUNTING CJ-5,7
Figure 9C-1000

81J09 1000

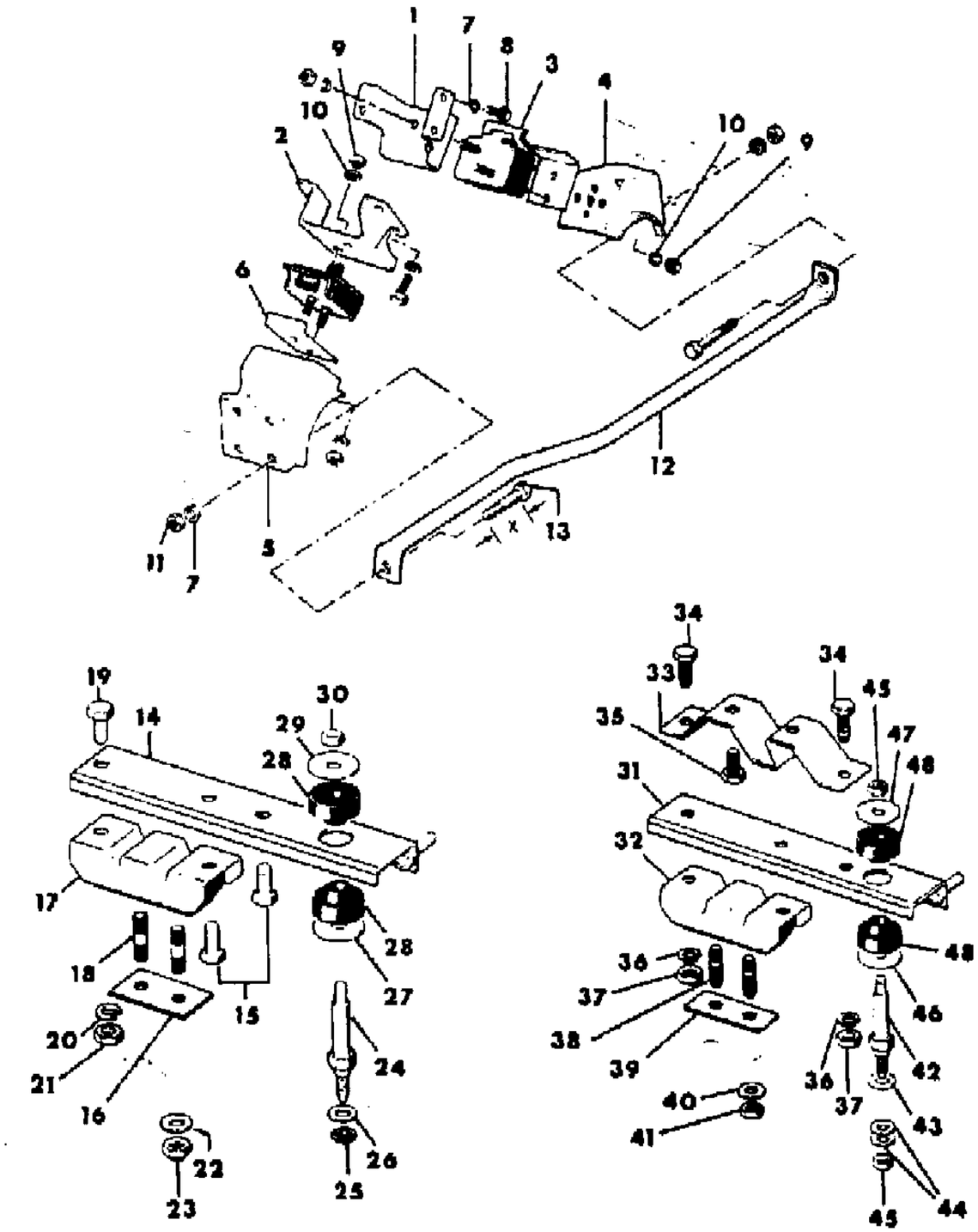

ITEM	PART NUMBER	QTY	BODY	MODEL	DESCRIPTION
1	J099 9147	1			BRACKET, Engine, Left
2	J099 9148	1			BRACKET, Engine, Right
3	J321 3534	2			MOUNT, Engine ***
4	J812 8343	1			BRACKET, Left
5	J535 5948	1			BRACKET, Right
6	J099 8842	2			RESTRICTOR ***
7	J012 0382	AR			WASHER, Lock
8	J018 0121	AR			BOLT
9	J400 3869	AR			NUT
10	J012 0394	AR			WASHER, Plain
11	J941 1783	AR			NUT, Lock
12	J535 5942	1			BAR, Tie
13					BOLT
	S018 1650	AR			2.50"
	S018 1651	AR			2.75"
	S018 1652	AR			3.00"
14	J536 1157	1			BRACKET
15	J400 6110	2			BOLT
16	J536 1885	1			SPACER
17	J137 0910	1			INSULATOR, Mounting
18	J400 4819	2			STUD
19	J018 0145	1			BOLT
20	J012 0383	1			WASHER
21	J027 1501	1			NUT
22	J400 1120	2			WASHER
23	J941 3215	2			NUT
24	J535 8879	1			STUD
25	J941 1783	1			NUT
26	J400 1134	1			WASHER
27	J094 1399	1			WASHER
28	J094 5266	2			INSULATOR
29	J094 5269	1			WASHER
30	J941 1783	1			NUT
31	J536 1323	1			BRACKET, US-49 States
32	J137 0910	1			INSULATOR
33	J535 9706	1			ADAPTER
34	J018 0145	2			BOLT
35	J400 4110	1			BOLT
36	J012 0383	2			WASHER

MODEL CODES
16=Cherokee 2 Dr.(1981-83)
17=Cherokee 2 Dr.(1981-83)
73=Cherokee 2WD-2 Dr.(1984-86)
74=Cherokee 2WD-4 Dr.(1984-86)
18=Cherokee 4 Dr.(1981-83)
77=Cherokee 4WD-2 Dr.(1984-86)
78=Cherokee 4WD-4 Dr.(1984-86)
85=CJ-5 (1981-83)
86=CJ-6(1981)
87=CJ-7(1981-86)
88=CJ-8, Scrambler(1981-86)
64=Comanche 2WD-6 Ft. Box(1986)
66=Comanche 2WD-7 Ft. Box(1986)
63=Comanche 4WD-6 Ft. Box(1986)
65=Comanche 4WD-7 Ft. Box(1986)
15=Grand Wagoneer 4 Dr.(1984-86)
25=J-10 Truck 7 Ft. Box(1981-84)
26=J10 Truck 8 Ft. Box(1981-86)
27=J-20 Truck 8 Ft. Box(1981-86)
15=Wagoneer 4 Dr.(1981-83)
75=Wagoneer 4WD-4 Dr.(1984-86)

BODY
CJ=CJ-5, CJ-6, CJ-7, CJ-8, Scrambler(1981-86)
MJ=Comanche Pickup(1986)

STYLES
SJ=Wagoneer(1981-83), Grand Wagoneer(1984-86), Cherokee(1981-83), J-10, J-20(1981-86)
XJ=Wagoneer(1984-86), Cherokee(1984-86)

AR = Use as Required - = Non Illustrated Part P.A.R. = Paint as Required

« RETURN TO GROUP INDEX »

ENGINE MOUNTING CJ-5,7
Figure 9C-1000

81J09 1000

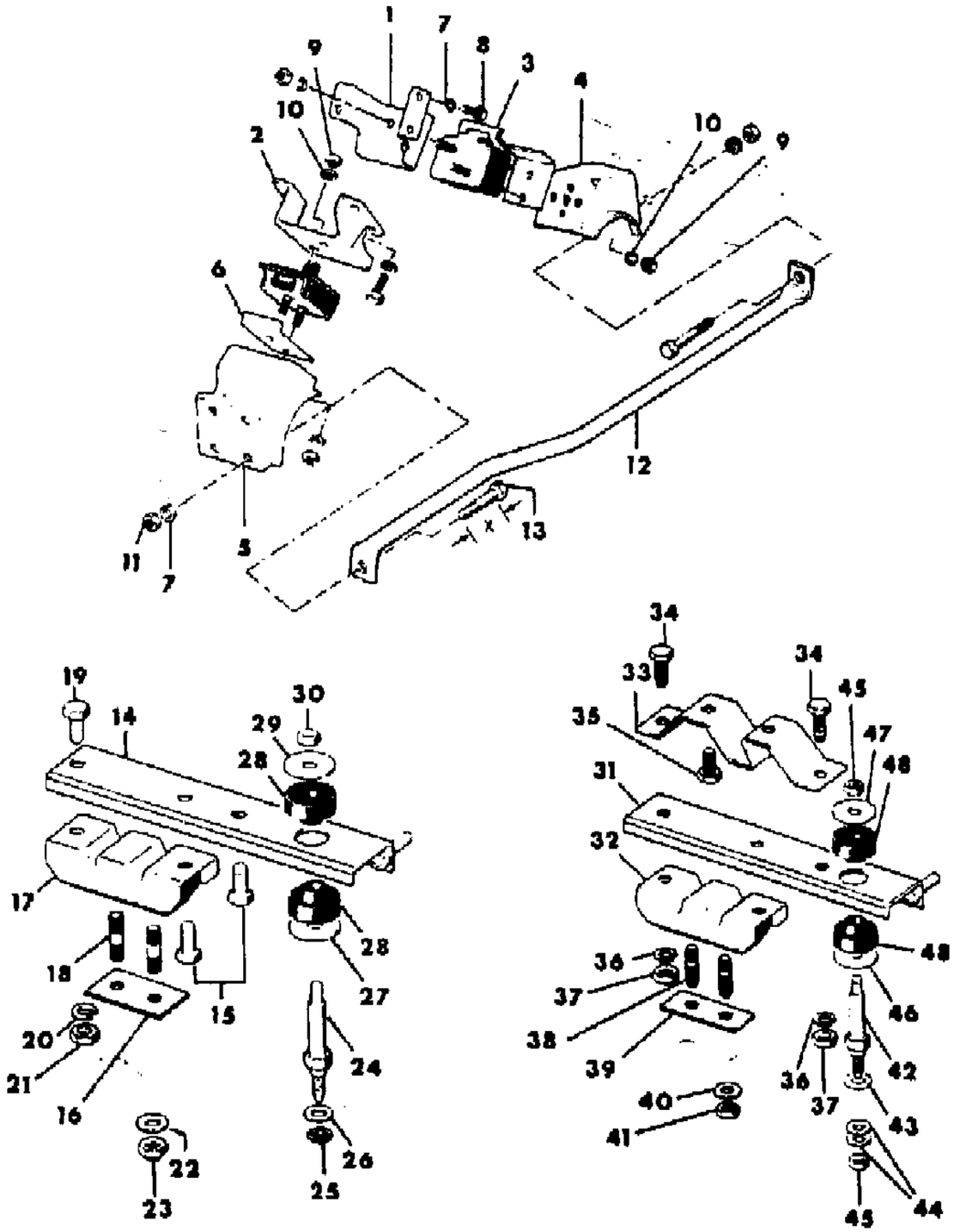

ITEM	PART NUMBER	QTY	BODY	MODEL	DESCRIPTION
37	J027 1501	2			NUT
38	J400 4819	2			STUD
39	J536 1885	1			SPACER
40	J400 1120	2			WASHER
41	J941 3215	2			NUT
42	J535 8879	1			STUD
43	J400 1134	1			WASHER
44	J400 1104	2			WASHER
45	J941 1783	2			NUT
46	J094 1399	1			WASHER
47	J094 5269	1			WASHER
48	J094 5266	2			INSULATOR

MODEL CODES

16=Cherokee 2 Dr.(1981-83)
17=Cherokee 2 Dr.(1981-83)
73=Cherokee 2WD-2 Dr.(1984-86)
74=Cherokee 2WD-4 Dr.(1984-86)
18=Cherokee 4 Dr.(1981-83)
77=Cherokee 4WD-2 Dr.(1984-86)
78=Cherokee 4WD-4 Dr.(1984-86)
85=CJ-5 (1981-83)
86=CJ-6(1981)
87=CJ-7(1981-86)
88=CJ-8, Scrambler(1981-86)
64=Comanche 2WD-6 Ft. Box(1986)
66=Comanche 2WD-7 Ft. Box(1986)
63=Comanche 4WD-6 Ft. Box(1986)
65=Comanche 4WD-7 Ft. Box(1986)
15=Grand Wagoneer 4 Dr.(1984-86)
25=J-10 Truck 7 Ft. Box(1981-84)
26=J10 Truck 8 Ft. Box(1981-86)
27=J-20 Truck 8 Ft. Box(1981-86)
15=Wagoneer 4 Dr.(1981-83)
75=Wagoneer 4WD-4 Dr.(1984-86)

BODY
CJ=CJ-5, CJ-6, CJ-7, CJ-8, Scrambler(1981-86)
MJ=Comanche Pickup(1986)

STYLES
SJ=Wagoneer(1981-83), Grand Wagoneer(1984-86), Cherokee(1981-83), J-10, J-20(1981-86)
XJ=Wagoneer(1984-86), Cherokee(1984-86)

AR = Use as Required - = Non Illustrated Part P.A.R. = Paint as Required

« RETURN TO GROUP INDEX

ENGINE, EIGHT CYLINDER SJ CHEROKEE, SJ WAGONEER, J10, J20
Figure 9C-1100

81J09 1100

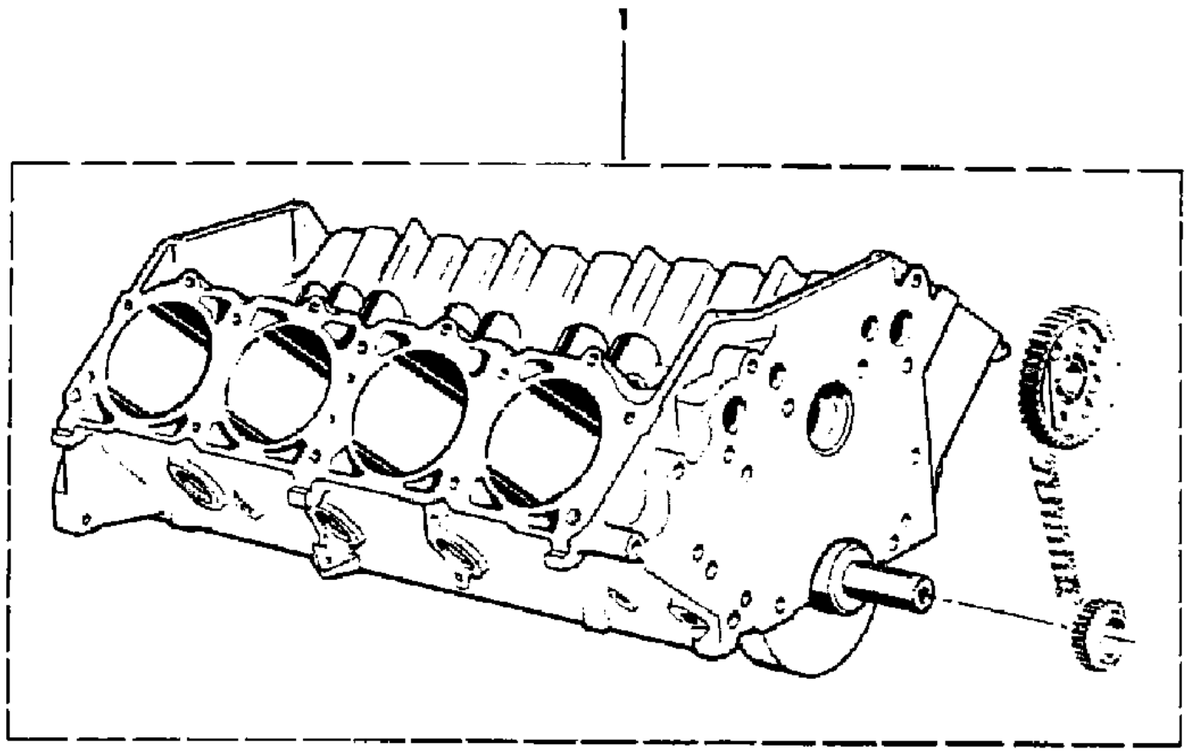

ITEM	PART NUMBER	QTY	BODY	MODEL	DESCRIPTION
1	J812 6088	1			ENGINE, Short, Without Camshaft

MODEL CODES
16=Cherokee 2 Dr.(1981-83)
17=Cherokee 2 Dr.(1981-83)
73=Cherokee 2WD-2 Dr.(1984-86)
74=Cherokee 2WD-4 Dr.(1984-86)
18=Cherokee 4 Dr.(1981-83)
77=Cherokee 4WD-2 Dr.(1984-86)
78=Cherokee 4WD-4 Dr.(1984-86)
85=CJ-5 (1981-83)
86=CJ-6(1981)
87=CJ-7(1981-86)
88=CJ-8, Scrambler(1981-86)
64=Comanche 2WD-6 Ft. Box(1986)
66=Comanche 2WD-7 Ft. Box(1986)
63=Comanche 4WD-6 Ft. Box(1986)
65=Comanche 4WD-7 Ft. Box(1986)
15=Grand Wagoneer 4 Dr.(1984-86)
25=J-10 Truck 7 Ft. Box(1981-84)
26=J10 Truck 8 Ft. Box(1981-86)
27=J-20 Truck 8 Ft. Box(1981-86)
15=Wagoneer 4 Dr.(1981-83)
75=Wagoneer 4WD-4 Dr.(1984-86)

BODY
CJ=CJ-5, CJ-6, CJ-7, CJ-8, Scrambler(1981-86)
MJ=Comanche Pickup(1986)

STYLES
SJ=Wagoneer(1981-83), Grand Wagoneer(1984-86), Cherokee(1981-83), J-10, J-20(1981-86)
XJ=Wagoneer(1984-86), Cherokee(1984-86)

AR = Use as Required - = Non Illustrated Part P.A.R. = Paint as Required

« RETURN TO GROUP INDEX

BLOCK, ENGINE SJ CHEROKEE, SJ WAGONEER, J10, J20
Figure 9C-1200

81J09 1200

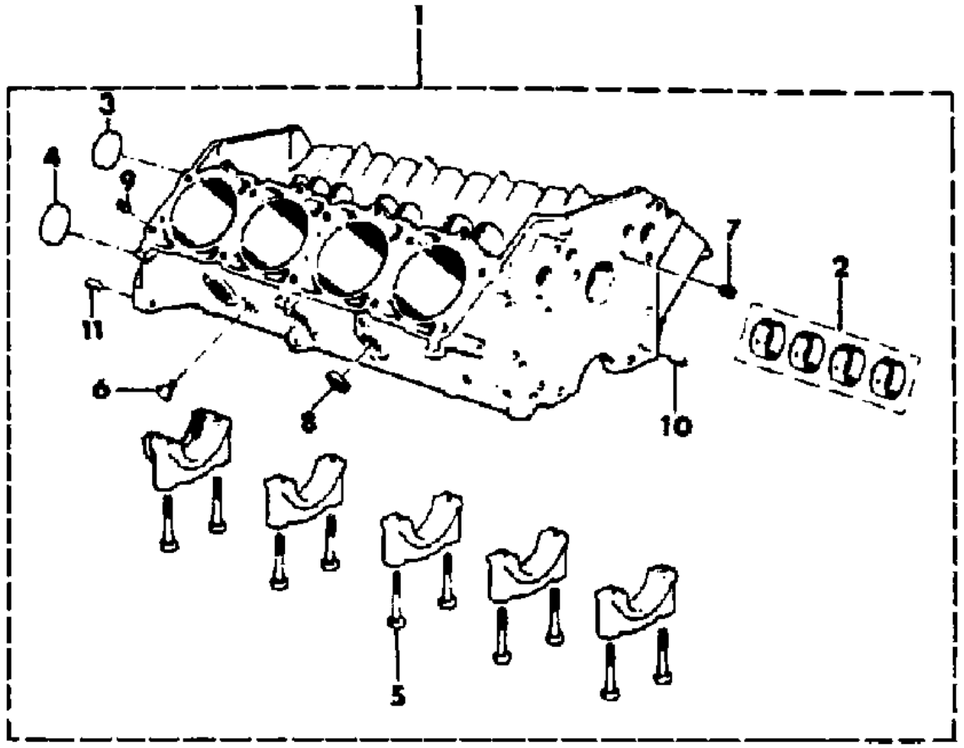

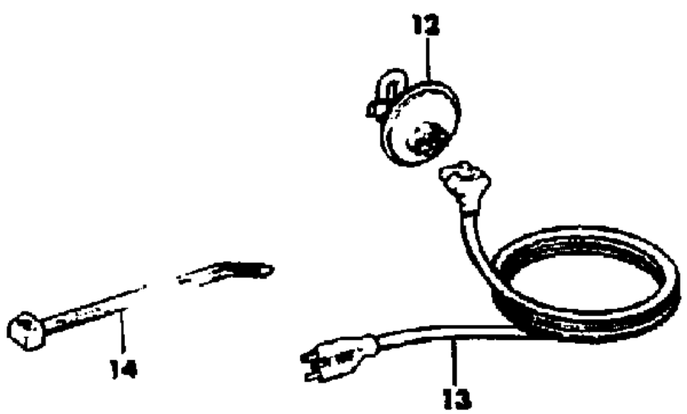

ITEM	PART NUMBER	QTY	BODY	MODEL	DESCRIPTION
1	J448 7212	1			BLOCK Engine ***
2					BEARING PACKAGE
	J448 6286	1			Standard
	J448 6890	1			+.010"
3	J317 2313	1			PLUG
4	J400 6580	2			PLUG
5	J319 0891	10			BOLT
6	J044 4618	2			PLUG
7	J044 4660	6			PLUG
8	J314 4641	6			PLUG
9	J400 5149	4			PIN
10	J400 5307	2			PIN
11	J400 5148	2			PIN
12	J323 4035	1			HEATER, Engine Block
13	J324 2324	1			CORD, Power Supply
14					STRAP, Tie
	J323 3227	AR			200mm
	J369 3058	AR			300mm
	J323 0270	AR			350mm
	J323 5187	AR			450mm

MODEL CODES

16=Cherokee 2 Dr.(1981-83)
17=Cherokee 2 Dr.(1981-83)
73=Cherokee 2WD-2 Dr.(1984-86)
74=Cherokee 2WD-4 Dr.(1984-86)
18=Cherokee 4 Dr.(1981-83)
77=Cherokee 4WD-2 Dr.(1984-86)
78=Cherokee 4WD-4 Dr.(1984-86)
85=CJ-5 (1981-83)
86=CJ-6(1981)
87=CJ-7(1981-86)
88=CJ-8, Scrambler(1981-86)
64=Comanche 2WD-6 Ft. Box(1986)
66=Comanche 2WD-7 Ft. Box(1986)
63=Comanche 4WD-6 Ft. Box(1986)
65=Comanche 4WD-7 Ft. Box(1986)
15=Grand Wagoneer 4 Dr.(1984-86)
25=J-10 Truck 7 Ft. Box(1981-84)
26=J10 Truck 8 Ft. Box(1981-86)
27=J-20 Truck 8 Ft. Box(1981-86)
15=Wagoneer 4 Dr.(1981-83)
75=Wagoneer 4WD-4 Dr.(1984-86)

BODY
CJ=CJ-5, CJ-6, CJ-7, CJ-8, Scrambler(1981-86)
MJ=Comanche Pickup(1986)

STYLES
SJ=Wagoneer(1981-83), Grand Wagoneer(1984-86), Cherokee(1981-83), J-10, J-20(1981-86)
XJ=Wagoneer(1984-86), Cherokee(1984-86)

AR = Use as Required - = Non Illustrated Part P.A.R. = Paint as Required

« RETURN TO GROUP INDEX

GASKET SET SJ CHEROKEE, SJ WAGONEER, J10, J20
Figure 9C-1300

81J09 1300

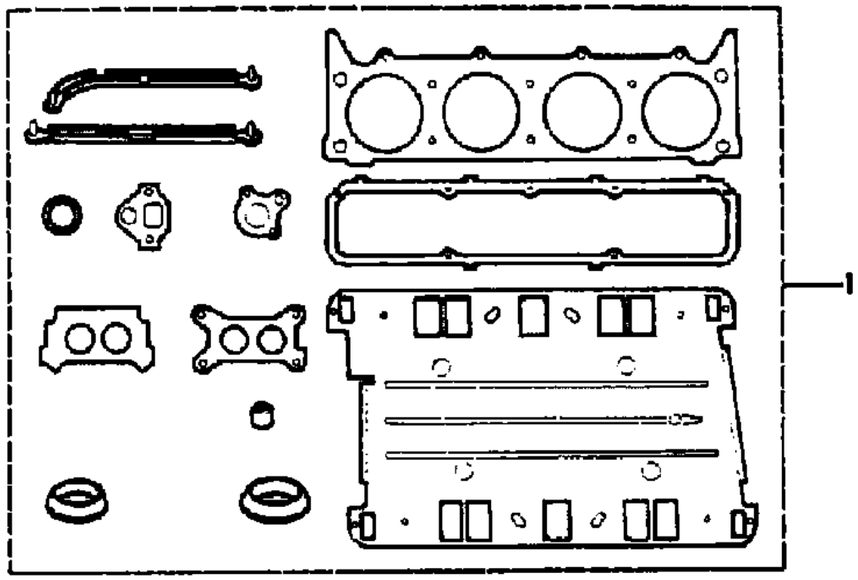

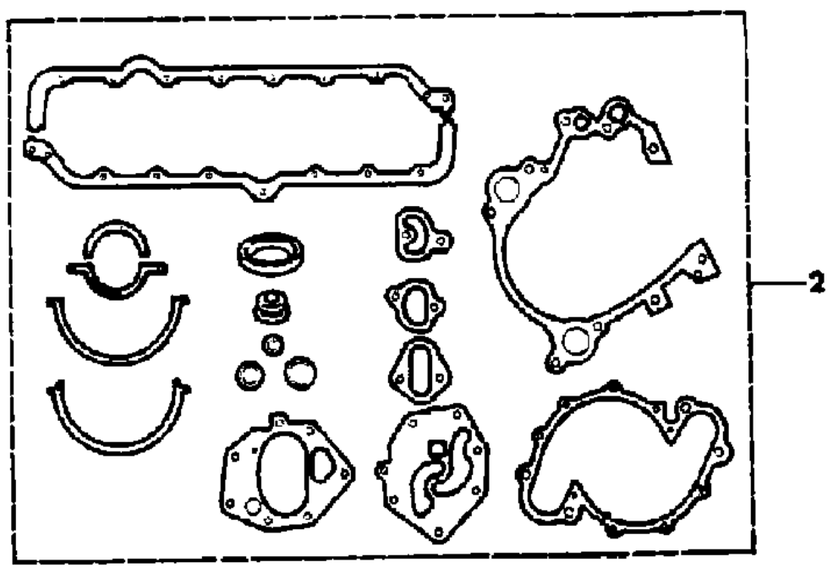

ITEM	PART NUMBER	QTY	BODY	MODEL	DESCRIPTION
1	J812 8192	1			GASKET PACKAGE, Engine Upper ***
2	J812 5727	1			GASKET PACKAGE, Engine Lower ***

MODEL CODES

16=Cherokee 2 Dr.(1981-83)
17=Cherokee 2 Dr.(1981-83)
73=Cherokee 2WD-2 Dr.(1984-86)
74=Cherokee 2WD-4 Dr.(1984-86)
18=Cherokee 4 Dr.(1981-83)
77=Cherokee 4WD-2 Dr.(1984-86)
78=Cherokee 4WD-4 Dr.(1984-86)
85=CJ-5 (1981-83)
86=CJ-6(1981)
87=CJ-7(1981-86)
88=CJ-8, Scrambler(1981-86)
64=Comanche 2WD-6 Ft. Box(1986)
66=Comanche 2WD-7 Ft. Box(1986)
63=Comanche 4WD-6 Ft. Box(1986)
65=Comanche 4WD-7 Ft. Box(1986)
15=Grand Wagoneer 4 Dr.(1984-86)
25=J-10 Truck 7 Ft. Box(1981-84)
26=J10 Truck 8 Ft. Box(1981-86)
27=J-20 Truck 8 Ft. Box(1981-86)
15=Wagoneer 4 Dr.(1981-83)
75=Wagoneer 4WD-4 Dr.(1984-86)

BODY

CJ=CJ-5, CJ-6, CJ-7, CJ-8, Scrambler(1981-86)
MJ=Comanche Pickup(1986)

STYLES

SJ=Wagoneer(1981-83), Grand Wagoneer(1984-86), Cherokee(1981-83), J-10, J-20(1981-86)
XJ=Wagoneer(1984-86), Cherokee(1984-86)

AR = Use as Required - = Non Illustrated Part P.A.R. = Paint as Required

« RETURN TO GROUP INDEX

CYLINDER HEAD SJ CHEROKEE, SJ WAGONEER, J10, J20
Figure 9C-1400

81J09 1400

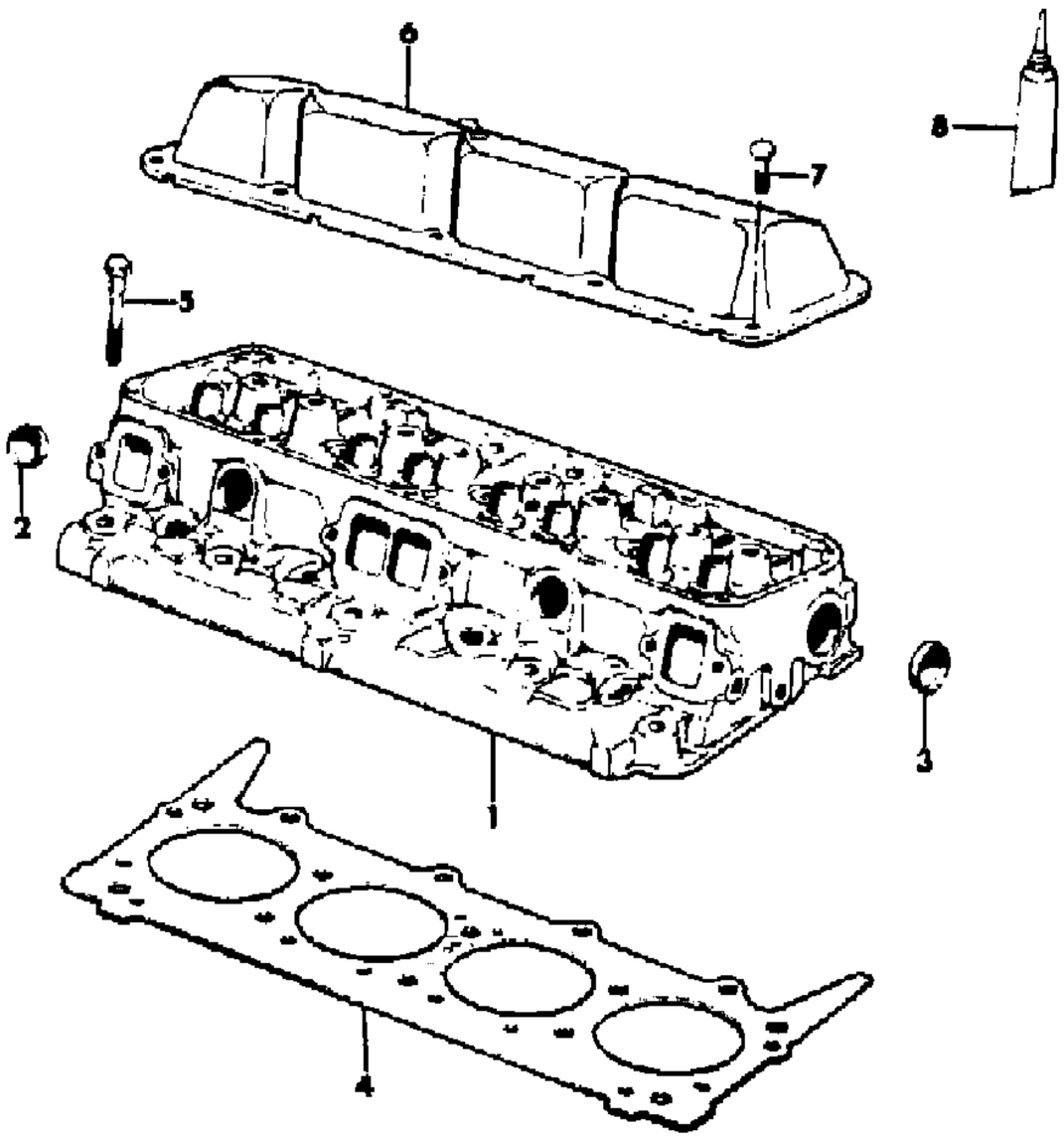

ITEM	PART NUMBER	QTY	BODY	MODEL	DESCRIPTION
1	J813 0366	2			HEAD, Engine Cylinder
2	J317 8449	2			PLUG
3	J314 4641	2			PLUG
4					GASKET
	J321 9846	2			1981
	J322 7352	2			1982-86
5					BOLT
	J319 4682	10			2.36"
	J319 4681	18			3.79"
6	J323 3719	2			COVER, Cylinder Head
7	J400 5731	14			BOLT
8	J899 3317	AR			SEALER ***

MODEL CODES

16=Cherokee 2 Dr.(1981-83)
17=Cherokee 2 Dr.(1981-83)
73=Cherokee 2WD-2 Dr.(1984-86)
74=Cherokee 2WD-4 Dr.(1984-86)
18=Cherokee 4 Dr.(1981-83)
77=Cherokee 4WD-2 Dr.(1984-86)
78=Cherokee 4WD-4 Dr.(1984-86)
85=CJ-5 (1981-83)
86=CJ-6(1981)
87=CJ-7(1981-86)
88=CJ-8, Scrambler(1981-86)
64=Comanche 2WD-6 Ft. Box(1986)
66=Comanche 2WD-7 Ft. Box(1986)
63=Comanche 4WD-6 Ft. Box(1986)
65=Comanche 4WD-7 Ft. Box(1986)
15=Grand Wagoneer 4 Dr.(1984-86)
25=J-10 Truck 7 Ft. Box(1981-84)
26=J10 Truck 8 Ft. Box(1981-86)
27=J-20 Truck 8 Ft. Box(1981-86)
15=Wagoneer 4 Dr.(1981-83)
75=Wagoneer 4WD-4 Dr.(1984-86)

BODY
CJ=CJ-5, CJ-6, CJ-7, CJ-8, Scrambler(1981-86)
MJ=Comanche Pickup(1986)

STYLES
SJ=Wagoneer(1981-83), Grand Wagoneer(1984-86), Cherokee(1981-83), J-10, J-20(1981-86)
XJ=Wagoneer(1984-86), Cherokee(1984-86)

AR = Use as Required - = Non Illustrated Part P.A.R. = Paint as Required

« RETURN TO GROUP INDEX

CRANKSHAFT, FLYWHEEL AND PISTON SJ CHEROKEE, SJ WAGONEER J10, J20
Figure 9C-1500

81J09 1500

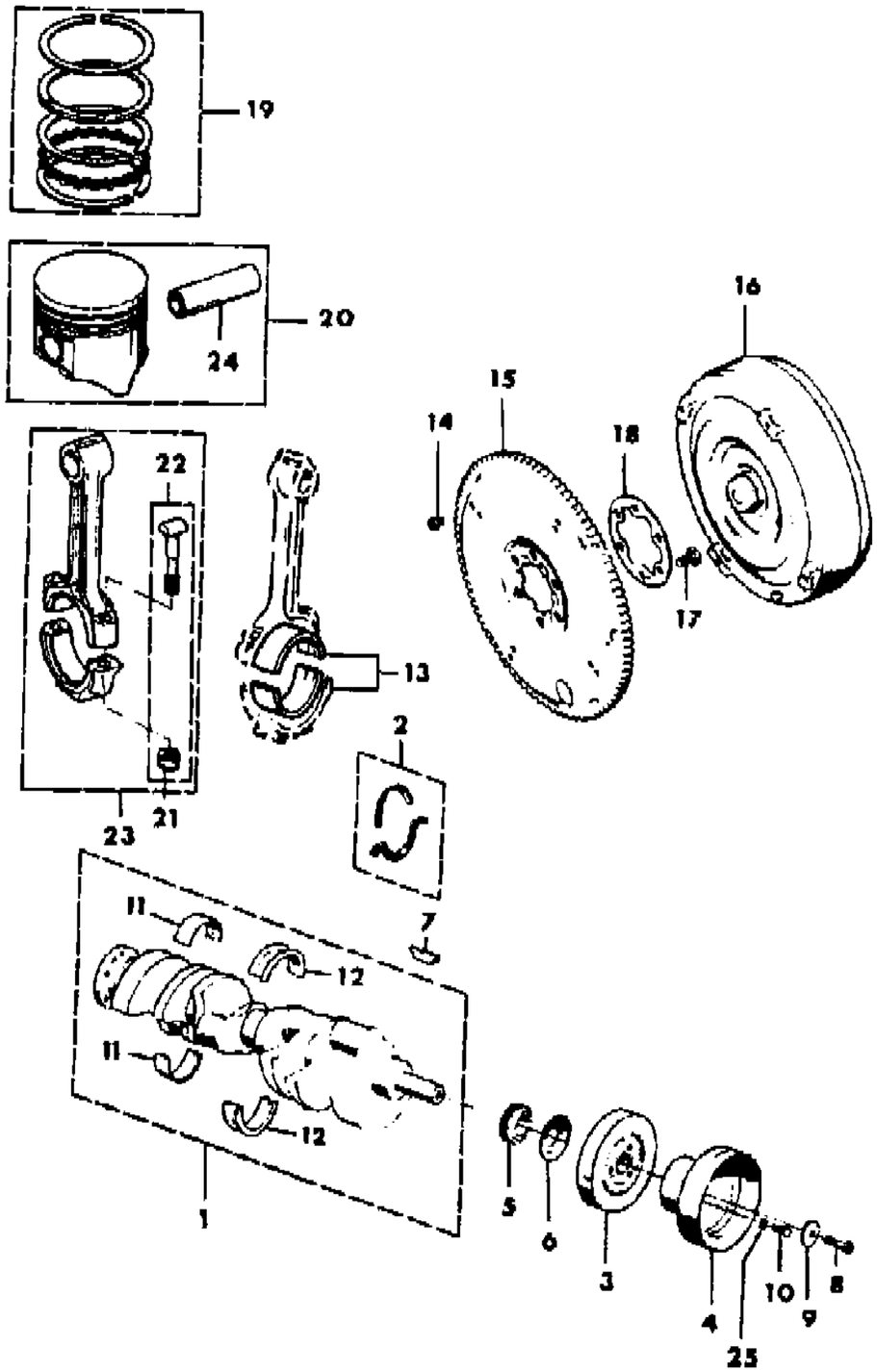

ITEM	PART NUMBER	QTY	BODY	MODEL	DESCRIPTION
1	J812 5451	1			CRANKSHAFT PACKAGE, (Add Pilot Bearing j3236726) ***
2	J320 6691	1			SEAL PACKAGE ***
3	J323 0131	1			DAMPER
4	J322 7671	1			PULLEY ***
5					SPROCKET, Camshaft
	J323 4235	1			.50"
	J322 3199	1			.62"
6	J318 0205	1			SLINGER, Oil ***
7	J322 9831	1			KEY
8	J400 5748	1			BOLT
9	J323 0155	1			WASHER
10	J018 0123	4			BOLT
11					BEARING PACKAGE
	J812 5928	4			Standard
	J812 5929	4			-.001"
	J812 5930	4			-.002"
	J812 5931	4			-.010"
	J812 5932	4			-.012"
12					BEARING PACKAGE
	J812 5933	1			Standard
	J812 5934	1			-.001"
	J812 5935	1			-.002"
	J812 5936	1			-.010"
	J812 5937	1			-.012"
13					BEARING PACKAGE
	J812 6204	8			Standard
	J812 6205	8			-.001"
	J812 6206	8			-.002"
	J812 6207	8			-.010"
	J812 6208	8			-.012"
14	J321 4097	4			BOLT
15					PLATE, Converter Drive
	J323 2138	1			1981-83
	J323 2139	1			Used on Transmission Model "727" ***
16					CONVERTER, Transmission
					For Transmission Coded "33000913"
	J813 2569	1			EXPORT
	JR77 5035	1			Remanufactured
					For Transmission Coded "33000917"

MODEL CODES

16=Cherokee 2 Dr.(1981-83)
17=Cherokee 2 Dr.(1981-83)
73=Cherokee 2WD-2 Dr.(1984-86)
74=Cherokee 2WD-4 Dr.(1984-86)
18=Cherokee 4 Dr.(1981-83)
77=Cherokee 4WD-2 Dr.(1984-86)
78=Cherokee 4WD-4 Dr.(1984-86)
85=CJ-5 (1981-83)
86=CJ-6(1981)
87=CJ-7(1981-86)
88=CJ-8, Scrambler(1981-86)
64=Comanche 2WD-6 Ft. Box(1986)
66=Comanche 2WD-7 Ft. Box(1986)
63=Comanche 4WD-6 Ft. Box(1986)
65=Comanche 4WD-7 Ft. Box(1986)
15=Grand Wagoneer 4 Dr.(1984-86)
25=J-10 Truck 7 Ft. Box(1981-84)
26=J10 Truck 8 Ft. Box(1981-86)
27=J-20 Truck 8 Ft. Box(1981-86)
15=Wagoneer 4 Dr.(1981-83)
75=Wagoneer 4WD-4 Dr.(1984-86)

BODY
CJ=CJ-5, CJ-6, CJ-7, CJ-8, Scrambler(1981-86)
MJ=Comanche Pickup(1986)

STYLES
SJ=Wagoneer(1981-83), Grand Wagoneer(1984-86), Cherokee(1981-83), J-10, J-20(1981-86)
XJ=Wagoneer(1984-86), Cherokee(1984-86)

AR = Use as Required - = Non Illustrated Part P.A.R. = Paint as Required

« RETURN TO GROUP INDEX »

CRANKSHAFT, FLYWHEEL AND PISTON SJ CHEROKEE, SJ WAGONEER J10, J20
Figure 9C-1500

81J09 1500

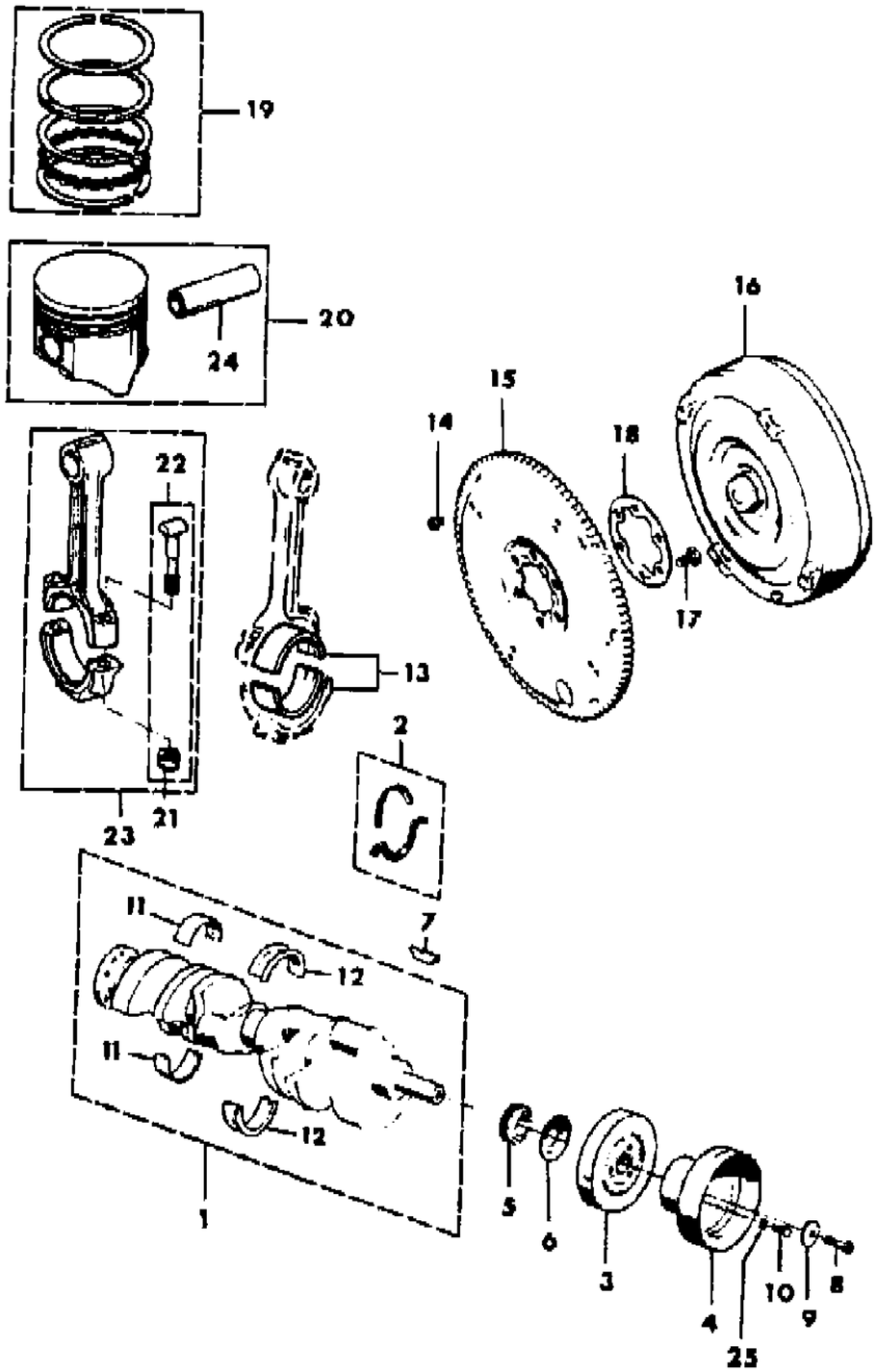

ITEM	PART NUMBER	QTY	BODY	MODEL	DESCRIPTION
	J813 2567	1			EXPORT
	JR77 5033	1			Remanufactured
					1981-83
	J813 3181	1			EXPORT
	JR77 5038	1			Remanufactured
	J813 2570	1			Economic Commission of Europe, Australian Design Rules
					1983: 2.73 Ratio, Lock-up
	J813 3181	1			EXPORT
	JR77 5038	1			Remanufactured
					1983-86
	J813 2570	1			EXPORT
	JR77 5036	1			Remanufactured
17	J315 1407	AR			BOLT
18	J321 4094	1			REINFORCEMENT
19					RING PACKAGE, Piston ***
					Standard
	J320 8065	1			1981
	J320 8066	1			1982-86
					+.010"
	J320 8067	1			1982-86
20					PISTON PACKAGE ***
					Standard
	J448 7567	1			1981
	J813 3807	1			1982-86
					+.010"
	J448 7568	1			1981
	J813 3803	1			1982-86
21					NUT
	J314 9556	16			Coded "707"
	J400 6385	16			Coded "352"
22					BOLT PACKAGE ***
	J448 6626	16			Coded "707"
	J813 3824	16			Coded "352"
23					ROD, Connecting
	J319 6750	8			Coded "707"
	J323 7814	8			Coded "352"
24					PIN, Piston
	J318 0483	8			Standard
	8350 0303	8			+.003"

MODEL CODES

16=Cherokee 2 Dr.(1981-83)
17=Cherokee 2 Dr.(1981-83)
73=Cherokee 2WD-2 Dr.(1984-86)
74=Cherokee 2WD-4 Dr.(1984-86)
18=Cherokee 4 Dr.(1981-83)
77=Cherokee 4WD-2 Dr.(1984-86)
78=Cherokee 4WD-4 Dr.(1984-86)
85=CJ-5 (1981-83)
86=CJ-6(1981)
87=CJ-7(1981-86)
88=CJ-8, Scrambler(1981-86)
64=Comanche 2WD-6 Ft. Box(1986)
66=Comanche 2WD-7 Ft. Box(1986)
63=Comanche 4WD-6 Ft. Box(1986)
65=Comanche 4WD-7 Ft. Box(1986)
15=Grand Wagoneer 4 Dr.(1984-86)
25=J-10 Truck 7 Ft. Box(1981-84)
26=J10 Truck 8 Ft. Box(1981-86)
27=J-20 Truck 8 Ft. Box(1981-86)
15=Wagoneer 4 Dr.(1981-83)
75=Wagoneer 4WD-4 Dr.(1984-86)

BODY
CJ=CJ-5, CJ-6, CJ-7, CJ-8, Scrambler(1981-86)
MJ=Comanche Pickup(1986)

STYLES
SJ=Wagoneer(1981-83), Grand Wagoneer(1984-86), Cherokee(1981-83), J-10, J-20(1981-86)
XJ=Wagoneer(1984-86), Cherokee(1984-86)

AR = Use as Required - = Non Illustrated Part P.A.R. = Paint as Required

CRANKSHAFT, FLYWHEEL AND PISTON SJ CHEROKEE, SJ WAGONEER J10, J20
Figure 9C-1500

81J09 1500

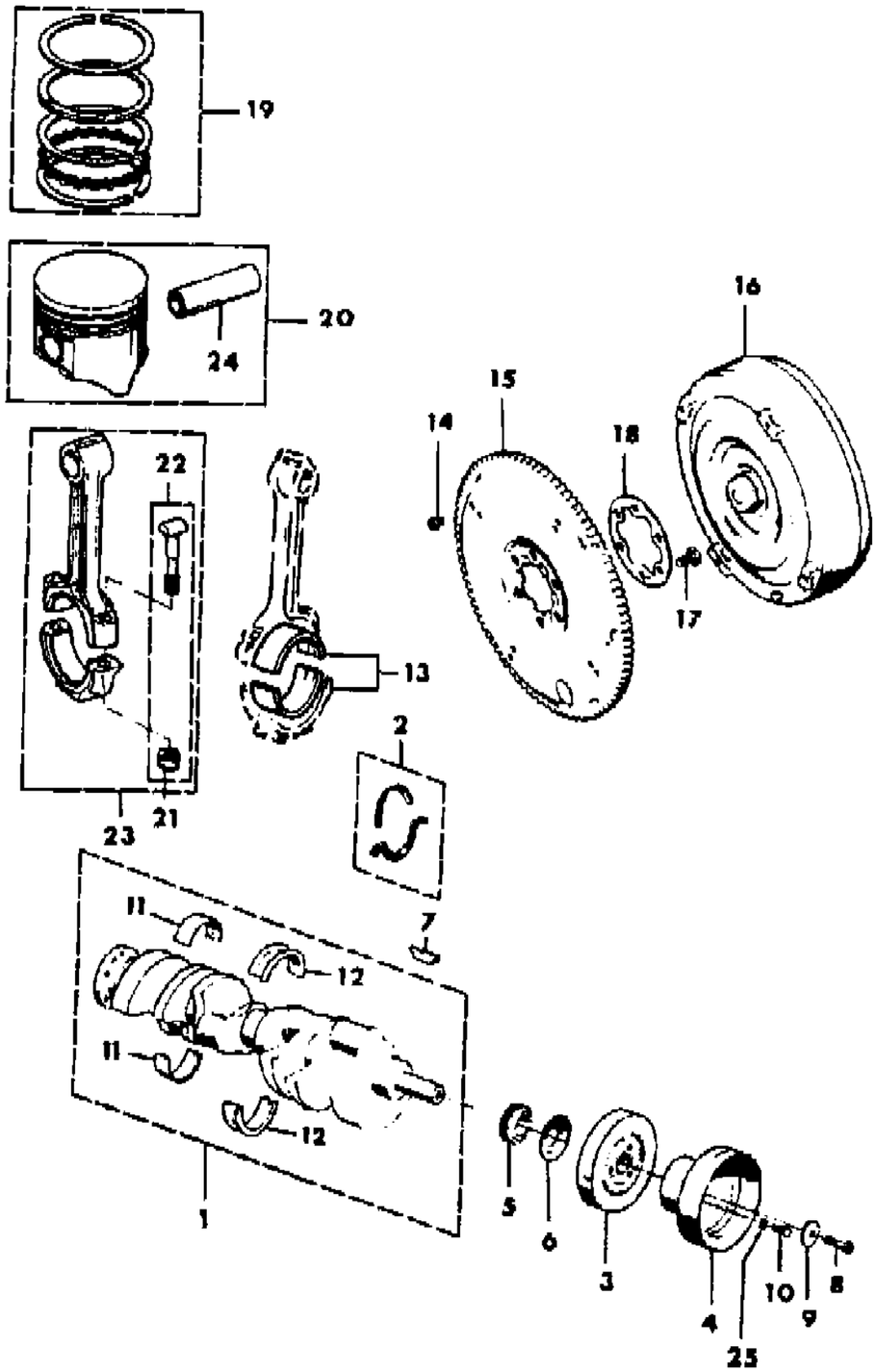

ITEM	PART NUMBER	QTY	BODY	MODEL	DESCRIPTION
	8350 0304	8			+.005"
25	J012 0382	AR			WASHER
26	3300 4041	1			BUSHING, Pilot w/man tran

MODEL CODES

16=Cherokee 2 Dr.(1981-83)
17=Cherokee 2 Dr.(1981-83)
73=Cherokee 2WD-2 Dr.(1984-86)
74=Cherokee 2WD-4 Dr.(1984-86)
18=Cherokee 4 Dr.(1981-83)
77=Cherokee 4WD-2 Dr.(1984-86)
78=Cherokee 4WD-4 Dr.(1984-86)
85=CJ-5 (1981-83)
86=CJ-6(1981)
87=CJ-7(1981-86)
88=CJ-8, Scrambler(1981-86)
64=Comanche 2WD-6 Ft. Box(1986)
66=Comanche 2WD-7 Ft. Box(1986)
63=Comanche 4WD-6 Ft. Box(1986)
65=Comanche 4WD-7 Ft. Box(1986)
15=Grand Wagoneer 4 Dr.(1984-86)
25=J-10 Truck 7 Ft. Box(1981-84)
26=J10 Truck 8 Ft. Box(1981-86)
27=J-20 Truck 8 Ft. Box(1981-86)
15=Wagoneer 4 Dr.(1981-83)
75=Wagoneer 4WD-4 Dr.(1984-86)

BODY
CJ=CJ-5, CJ-6, CJ-7, CJ-8, Scrambler(1981-86)
MJ=Comanche Pickup(1986)

STYLES
SJ=Wagoneer(1981-83), Grand Wagoneer(1984-86), Cherokee(1981-83), J-10, J-20(1981-86)
XJ=Wagoneer(1984-86), Cherokee(1984-86)

AR = Use as Required - = Non Illustrated Part P.A.R. = Paint as Required

« RETURN TO GROUP INDEX

CAMSHAFT AND VALVES SJ CHEROKEE, SJ WAGONEER, J10, J20
Figure 9C-1600

81J09 1600

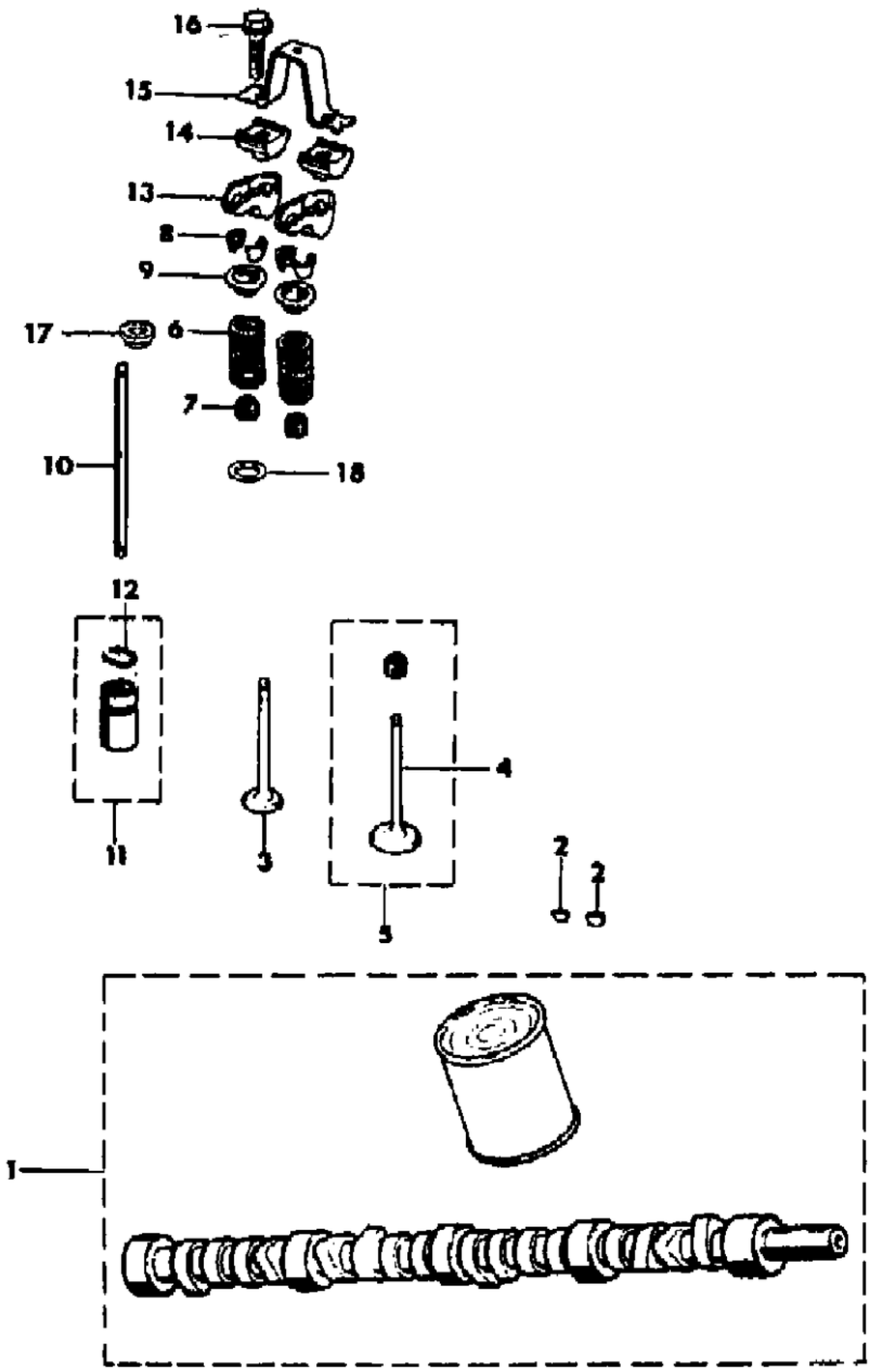

ITEM	PART NUMBER	QTY	BODY	MODEL	DESCRIPTION
1	J448 6476	1			CAMSHAFT
2	J012 4546	2			KEY
3					VALVE, Exhaust
	J322 4598	8			Standard
	J321 9896	8			Standard, EXPORT, Australian Design Rules
	J322 4604	8			+.003"
	J322 4605	8			+.015"
4	J322 9657	8			VALVE, Intake, Standard
5					VALVE, Intake
	J812 7694	8			+.003"
	J812 7695	8			+.015"
6					SPRING
	J322 8192	16			
	J321 9893	8			Exhaust Valve, EXPORT, Australian Design Rules
	J322 8192	8			Intake Valve, EXPORT, Australian Design Rules
7					DEFLECTOR ***
	J321 8976	16			Standard
	J321 8976	16			+.003"
	J321 8977	16			+.015"
	J321 8978	16			+.030"
8					KEEPER ***
	J318 0458	32			1981
	J315 6157	32			1982-86
					Intake Valve
	J318 0458	16			1981: EXPORT, Australian Design Rules
	J315 6157	16			1982-86: EXPORT, Australian Design Rules
					Exhaust Valve
	J812 3237	16			1981-86: EXPORT, Australian Design Rules
9					RETAINER
	J323 7482	16			1981
	J323 1483	16			1982-86
10	J321 4014	16			PUSHROD ***
11	J322 2276	16			TAPPET
12	J644 0614	16			RING
13	J322 3539	16			ARM, Valve Rocker
14	J323 5090	16			PIVOT
15	J323 6513	8			BRIDGE ***
16	J812 0512	16			BOLT
17	J321 9895	8			ROTATOR, Exhaust Valve, EXPORT, Australian Design Rules

MODEL CODES

16=Cherokee 2 Dr.(1981-83)
17=Cherokee 2 Dr.(1981-83)
73=Cherokee 2WD-2 Dr.(1984-86)
74=Cherokee 2WD-4 Dr.(1984-86)
18=Cherokee 4 Dr.(1981-83)
77=Cherokee 4WD-2 Dr.(1984-86)
78=Cherokee 4WD-4 Dr.(1984-86)
85=CJ-5 (1981-83)
86=CJ-6(1981)
87=CJ-7(1981-86)
88=CJ-8, Scrambler(1981-86)
64=Comanche 2WD-6 Ft. Box(1986)
66=Comanche 2WD-7 Ft. Box(1986)
63=Comanche 4WD-6 Ft. Box(1986)
65=Comanche 4WD-7 Ft. Box(1986)
15=Grand Wagoneer 4 Dr.(1984-86)
25=J-10 Truck 7 Ft. Box(1981-84)
26=J10 Truck 8 Ft. Box(1981-86)
27=J-20 Truck 8 Ft. Box(1981-86)
15=Wagoneer 4 Dr.(1981-83)
75=Wagoneer 4WD-4 Dr.(1984-86)

BODY
CJ=CJ-5, CJ-6, CJ-7, CJ-8, Scrambler(1981-86)
MJ=Comanche Pickup(1986)

STYLES
SJ=Wagoneer(1981-83), Grand Wagoneer(1984-86), Cherokee(1981-83), J-10, J-20(1981-86)
XJ=Wagoneer(1984-86), Cherokee(1984-86)

AR = Use as Required - = Non Illustrated Part P.A.R. = Paint as Required

81J09 1600

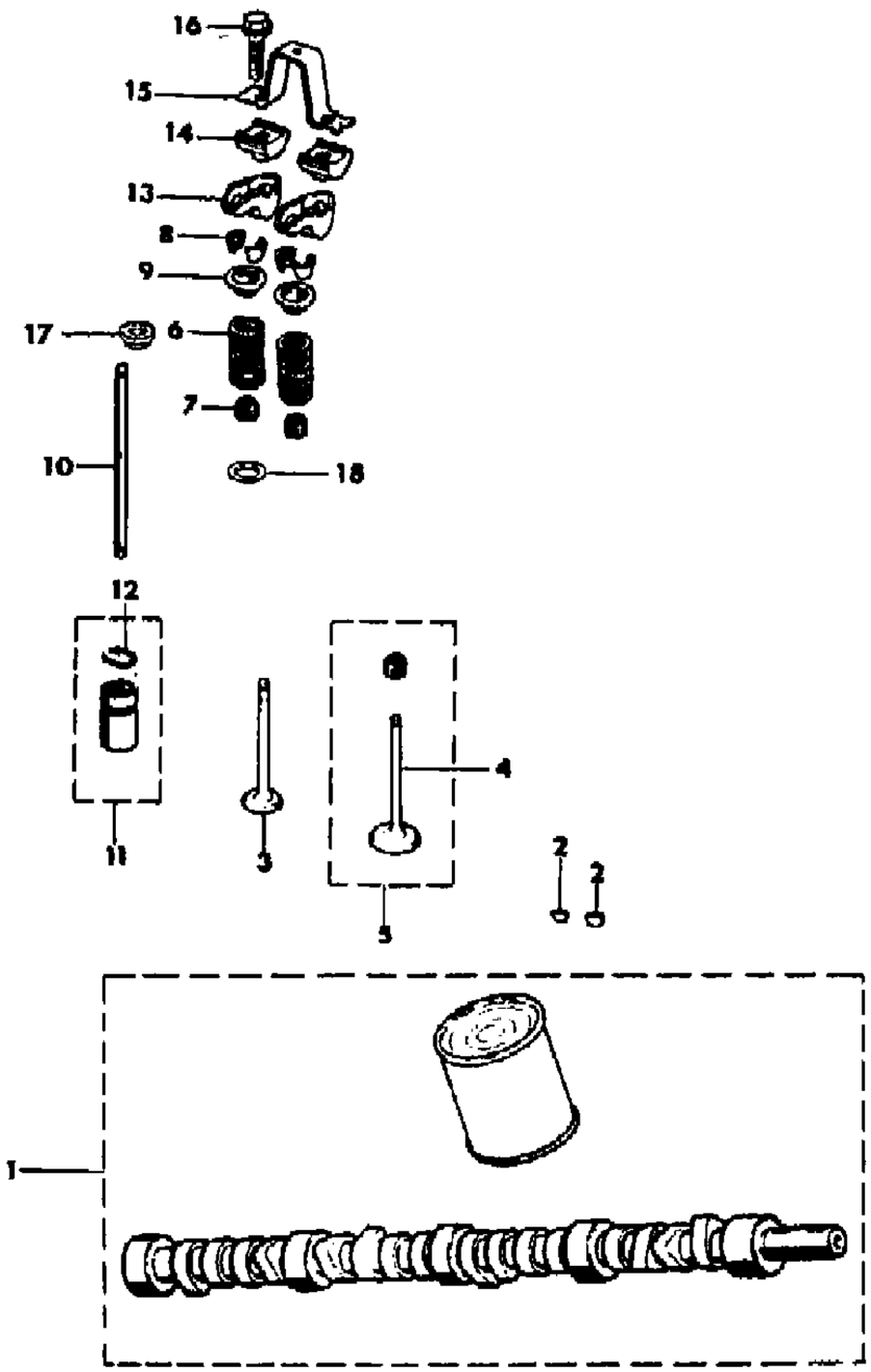

ITEM	PART NUMBER	QTY	BODY	MODEL	DESCRIPTION
18	J322 3898	8			SEAT, Valve Spring, Exhaust Valve, EXPORT, Australian Design Rules ***

MODEL CODES
16=Cherokee 2 Dr.(1981-83)
17=Cherokee 2 Dr.(1981-83)
73=Cherokee 2WD-2 Dr.(1984-86)
74=Cherokee 2WD-4 Dr.(1984-86)
18=Cherokee 4 Dr.(1981-83)
77=Cherokee 4WD-2 Dr.(1984-86)
78=Cherokee 4WD-4 Dr.(1984-86)
85=CJ-5 (1981-83)
86=CJ-6(1981)
87=CJ-7(1981-86)
88=CJ-8, Scrambler(1981-86)
64=Comanche 2WD-6 Ft. Box(1986)
66=Comanche 2WD-7 Ft. Box(1986)
63=Comanche 4WD-6 Ft. Box(1986)
65=Comanche 4WD-7 Ft. Box(1986)
15=Grand Wagoneer 4 Dr.(1984-86)
25=J-10 Truck 7 Ft. Box(1981-84)
26=J10 Truck 8 Ft. Box(1981-86)
27=J-20 Truck 8 Ft. Box(1981-86)
15=Wagoneer 4 Dr.(1981-83)
75=Wagoneer 4WD-4 Dr.(1984-86)

BODY
CJ=CJ-5, CJ-6, CJ-7, CJ-8, Scrambler(1981-86)
MJ=Comanche Pickup(1986)

STYLES
SJ=Wagoneer(1981-83), Grand Wagoneer(1984-86), Cherokee(1981-83), J-10, J-20(1981-86)
XJ=Wagoneer(1984-86), Cherokee(1984-86)

AR = Use as Required - = Non Illustrated Part P.A.R. = Paint as Required

TIMING COVER SJ CHEROKEE, SJ WAGONEER, J10, J20
Figure 9C-1700

81J09 1700

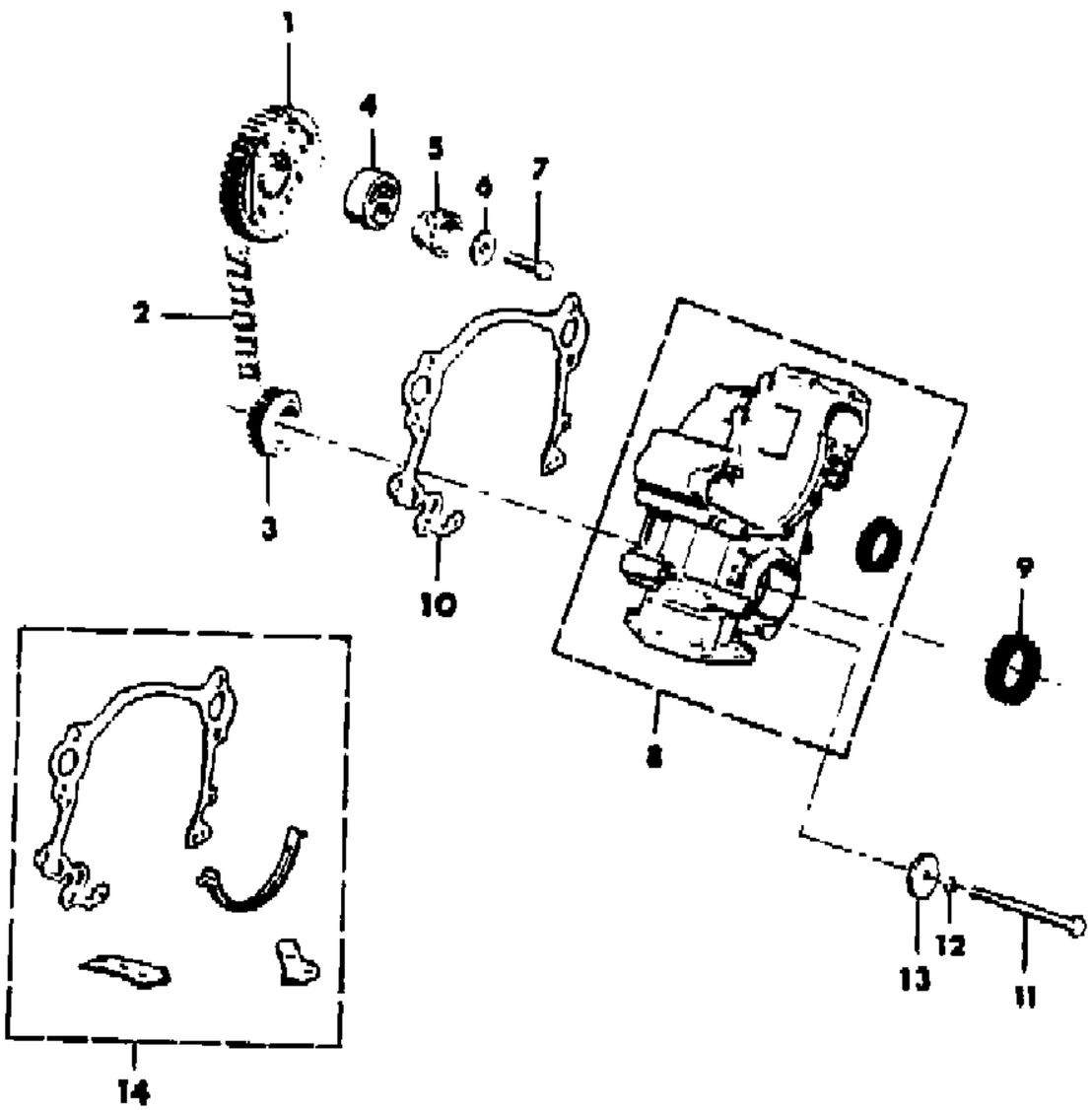

ITEM	PART NUMBER	QTY	BODY	MODEL	DESCRIPTION
1					SPROCKET, Camshaft
	J323 4234	1			.50" Wide
	J319 7138	1			.62" Wide
2					CHAIN, Timing
	J323 4433	1			.50" Wide
	J813 4343	1			.62" Wide
3					SPROCKET, Crankshaft
	J323 4235	1			.50" Wide
	J322 3199	1			.62" Wide
4	J321 8314	1			ECCENTRIC, Fuel Pump
5	J319 4007	1			GEAR, Distributor
6	J318 9338	1			SPACER
7	J019 2353	1			BOLT
8	J812 9373	1			COVER
9	J319 3613	1			SEAL
10	J318 0216	1			GASKET
11					BOLT
	J017 9844	2			1.62"
	J018 6276	2			2.12"
	J018 9303	2			3.12"
12	J400 3803	4			WASHER, Lock
13	J400 1102	4			WASHER, Plain
14	J812 9098	1			GASKET PACKAGE ***

MODEL CODES

16=Cherokee 2 Dr.(1981-83)
17=Cherokee 2 Dr.(1981-83)
73=Cherokee 2WD-2 Dr.(1984-86)
74=Cherokee 2WD-4 Dr.(1984-86)
18=Cherokee 4 Dr.(1981-83)
77=Cherokee 4WD-2 Dr.(1984-86)
78=Cherokee 4WD-4 Dr.(1984-86)
85=CJ-5 (1981-83)
86=CJ-6(1981)
87=CJ-7(1981-86)
88=CJ-8, Scrambler(1981-86)
64=Comanche 2WD-6 Ft. Box(1986)
66=Comanche 2WD-7 Ft. Box(1986)
63=Comanche 4WD-6 Ft. Box(1986)
65=Comanche 4WD-7 Ft. Box(1986)
15=Grand Wagoneer 4 Dr.(1984-86)
25=J-10 Truck 7 Ft. Box(1981-84)
26=J10 Truck 8 Ft. Box(1981-86)
27=J-20 Truck 8 Ft. Box(1981-86)
15=Wagoneer 4 Dr.(1981-83)
75=Wagoneer 4WD-4 Dr.(1984-86)

BODY
CJ=CJ-5, CJ-6, CJ-7, CJ-8, Scrambler(1981-86)
MJ=Comanche Pickup(1986)

STYLES
SJ=Wagoneer(1981-83), Grand Wagoneer(1984-86), Cherokee(1981-83), J-10, J-20(1981-86)
XJ=Wagoneer(1984-86), Cherokee(1984-86)

AR = Use as Required - = Non Illustrated Part P.A.R. = Paint as Required

« RETURN TO GROUP INDEX

ENGINE OILING SJ CHEROKEE, SJ WAGONEER, J10, J20
Figure 9C-1800

81J09 1800

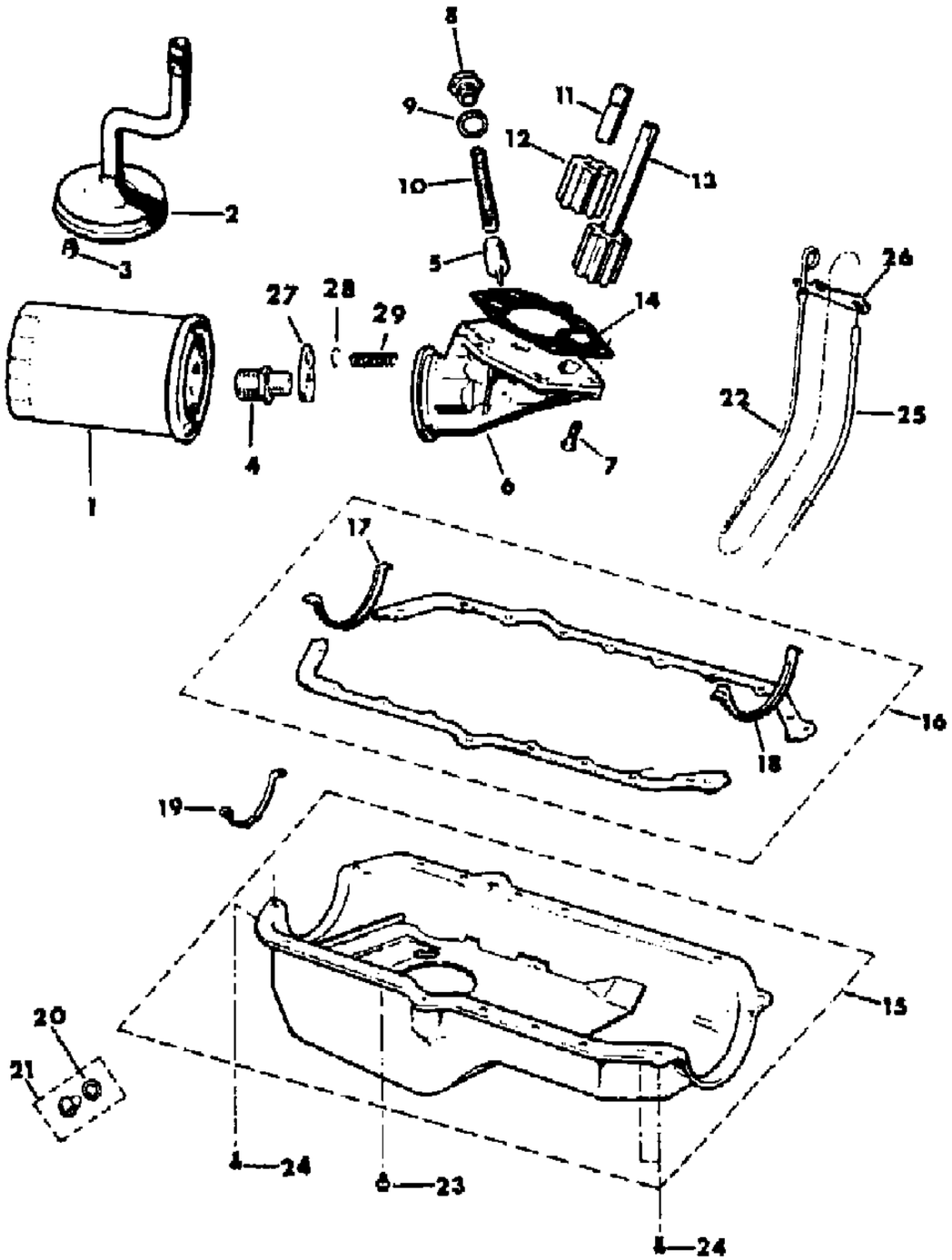

ITEM	PART NUMBER	QTY	BODY	MODEL	DESCRIPTION
1					FILTER, Engine Oil
	J899 3146	1			1981-82
	J324 2397	1			1983-86
2	J321 6049	1			TUBE, Oil Pump Inlet
3	J316 7541	1			SPACER
4	3300 3538	1			CONNECTOR
5					PLUNGER
	J318 8661	1			Standard
	J324 1676	1			+.010"
6	J322 6242	1			COVER, Oil Pump
7	J017 9796	7			BOLT
8	J312 4735	1			CAP
9	J310 5561	1			GASKET
10	J323 3994	1			SPRING
11	J318 0209	1			SHAFT
12	J319 6842	1			GEAR, Oil Pump Driven
13	J318 2698	1			GEAR, Drive
14	J322 6241	1			GASKET, Cover
15	J323 6322	1			PAN, Engine Oil
16	J320 6690	1			GASKET PACKAGE ***
17	3300 4733	1			SEAL
18	J318 0414	1			SEAL
19	J324 3116	1			SUPPORT
20	J317 0271	1			SEAL
21					PLUG PACKAGE
	J812 1449	1			Non-Magnetic
	J320 6696	1			Magnetic
22	J322 4880	1			INDICATOR, Engine Oil Level
23	J400 6296	14			SCREW
24	J400 6909	6			SCREW
25	J319 0848	1			TUBE, Engine Oil Indicator
26	J321 5161	1			BRACKET
27	J317 3225	1			RETAINER
28	J317 3203	1			VALUE ***
29	J317 3224	1			SPRING

MODEL CODES

16=Cherokee 2 Dr.(1981-83)
17=Cherokee 2 Dr.(1981-83)
73=Cherokee 2WD-2 Dr.(1984-86)
74=Cherokee 2WD-4 Dr.(1984-86)
18=Cherokee 4 Dr.(1981-83)
77=Cherokee 4WD-2 Dr.(1984-86)
78=Cherokee 4WD-4 Dr.(1984-86)
85=CJ-5 (1981-83)
86=CJ-6(1981)
87=CJ-7(1981-86)
88=CJ-8, Scrambler(1981-86)
64=Comanche 2WD-6 Ft. Box(1986)
66=Comanche 2WD-7 Ft. Box(1986)
63=Comanche 4WD-6 Ft. Box(1986)
65=Comanche 4WD-7 Ft. Box(1986)
15=Grand Wagoneer 4 Dr.(1984-86)
25=J-10 Truck 7 Ft. Box(1981-84)
26=J10 Truck 8 Ft. Box(1981-86)
27=J-20 Truck 8 Ft. Box(1981-86)
15=Wagoneer 4 Dr.(1981-83)
75=Wagoneer 4WD-4 Dr.(1984-86)

BODY
CJ=CJ-5, CJ-6, CJ-7, CJ-8, Scrambler(1981-86)
MJ=Comanche Pickup(1986)

STYLES
SJ=Wagoneer(1981-83), Grand Wagoneer(1984-86), Cherokee(1981-83), J-10, J-20(1981-86)
XJ=Wagoneer(1984-86), Cherokee(1984-86)

AR = Use as Required - = Non Illustrated Part P.A.R. = Paint as Required

« RETURN TO GROUP INDEX

MANIFOLD, INTAKE AND EXHAUST SJ CHEROKEE, SJ WAGONEER, J10, J20
Figure 9C-1900

81J09 1900

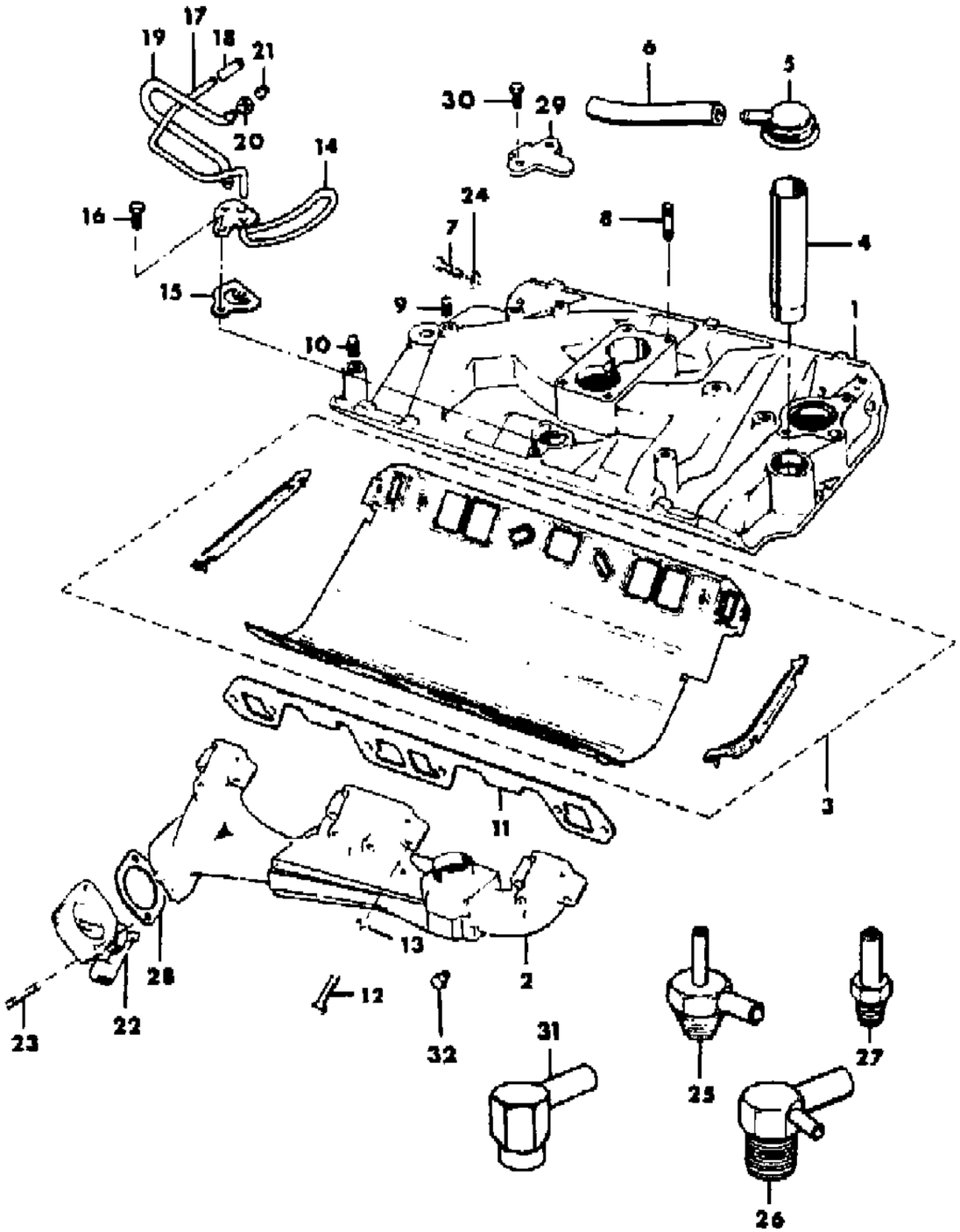

ITEM	PART NUMBER	QTY	BODY	MODEL	DESCRIPTION
1	J323 3786	1			MANIFOLD, Intake
2					MANIFOLD, Exhaust
	J812 9210	1			Left
	J812 1274	1			Right
3	J812 5869	1			GASKET PACKAGE ***
4	J319 8950	1			TUBE, Oil Filler
5	J322 0248	1			CAP
6	J812 5841	AR			HOSE, Bulk
7	J999 8055	AR			BOLT
8	J019 2423	4			STUD
9	J010 3877	AR			PLUG
10	J044 4660	AR			PLUG
11	J323 7270	2			GASKET
12					BOLT
	J400 4538	4			.38"
	J400 6311	8			.31"
13					WASHER
	J400 3938	4			.38"
	J400 6292	8			.31"
14	J322 0181	1			TUBE
15	J321 8215	1			GASKET
16	J400 6297	2			SCREW
17	J323 0266	1			TUBE, Clean Air
18	J812 5813	AR			HOSE, Bulk
19	J323 9811	1			TUBE, Heat
20	J011 4627	1			NUT
21	J011 4628	1			SLEEVE
22	J323 8998	1			DAMPER
23					STUD
	J400 4110	2			Left
	J400 4109	2			Right
24	J400 3938	12			WASHER
25	J322 5447	1			FITTING ***
26	J321 6512	1			FITTING ***
27	5300 2726	1			FITTING ***
28	J535 3073	1			GASKET
29	J321 9665	1			COVER, EGR Port
30	J027 3573	2			BOLT
31	J319 8347	1			ELBOW, Vacuum, Intake Manifold

MODEL CODES

16=Cherokee 2 Dr.(1981-83)
17=Cherokee 2 Dr.(1981-83)
73=Cherokee 2WD-2 Dr.(1984-86)
74=Cherokee 2WD-4 Dr.(1984-86)
18=Cherokee 4 Dr.(1981-83)
77=Cherokee 4WD-2 Dr.(1984-86)
78=Cherokee 4WD-4 Dr.(1984-86)
85=CJ-5 (1981-83)
86=CJ-6(1981)
87=CJ-7(1981-86)
88=CJ-8, Scrambler(1981-86)
64=Comanche 2WD-6 Ft. Box(1986)
66=Comanche 2WD-7 Ft. Box(1986)
63=Comanche 4WD-6 Ft. Box(1986)
65=Comanche 4WD-7 Ft. Box(1986)
15=Grand Wagoneer 4 Dr.(1984-86)
25=J-10 Truck 7 Ft. Box(1981-84)
26=J10 Truck 8 Ft. Box(1981-86)
27=J-20 Truck 8 Ft. Box(1981-86)
15=Wagoneer 4 Dr.(1981-83)
75=Wagoneer 4WD-4 Dr.(1984-86)

BODY
CJ=CJ-5, CJ-6, CJ-7, CJ-8, Scrambler(1981-86)
MJ=Comanche Pickup(1986)

STYLES
SJ=Wagoneer(1981-83), Grand Wagoneer(1984-86), Cherokee(1981-83), J-10, J-20(1981-86)
XJ=Wagoneer(1984-86), Cherokee(1984-86)

AR = Use as Required - = Non Illustrated Part P.A.R. = Paint as Required

« RETURN TO GROUP INDEX »

81J09 1900

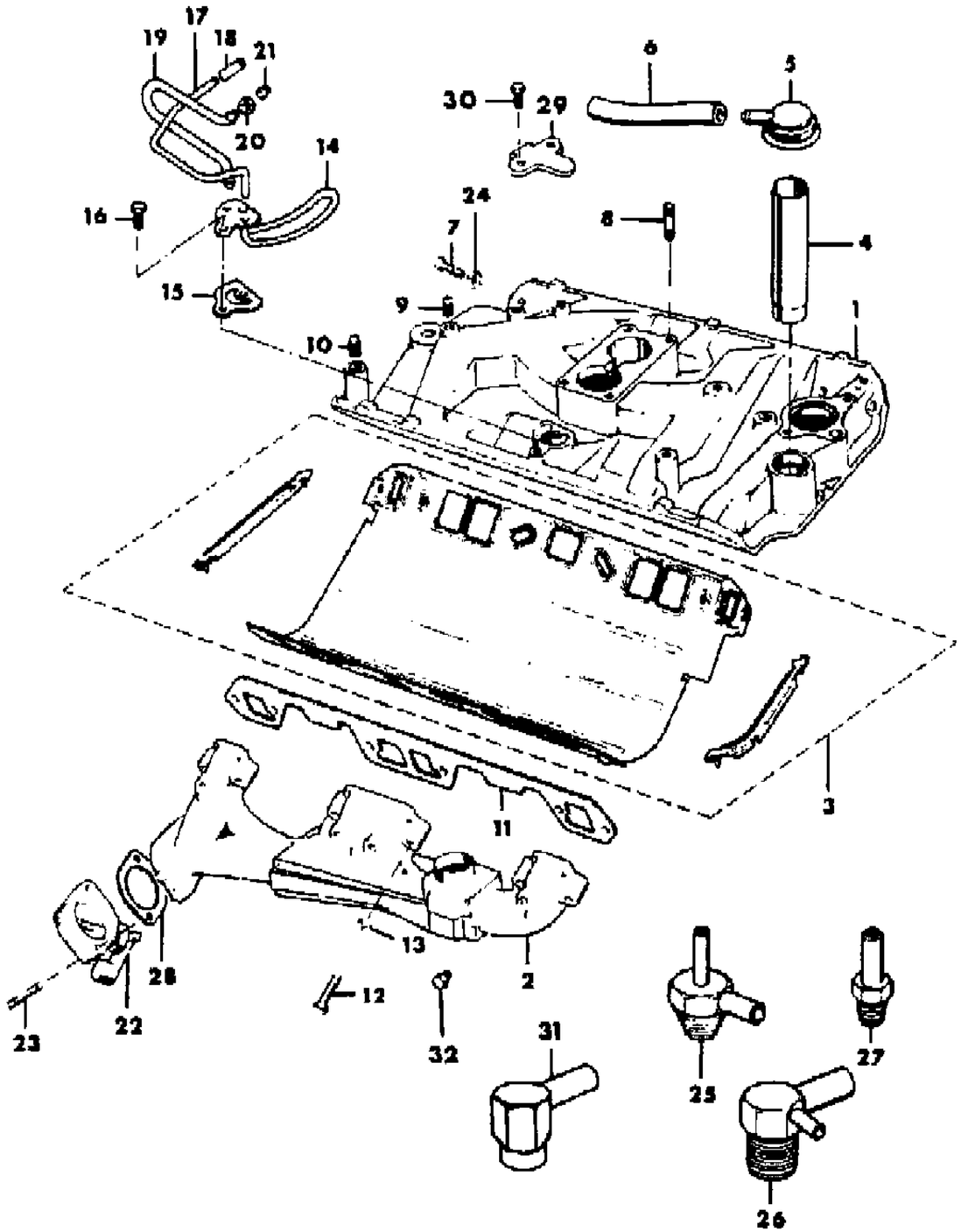

ITEM	PART NUMBER	QTY	BODY	MODEL	DESCRIPTION
32	J321 4061	AR			PLUG, EXPORT

MODEL CODES
16=Cherokee 2 Dr.(1981-83)
17=Cherokee 2 Dr.(1981-83)
73=Cherokee 2WD-2 Dr.(1984-86)
74=Cherokee 2WD-4 Dr.(1984-86)
18=Cherokee 4 Dr.(1981-83)
77=Cherokee 4WD-2 Dr.(1984-86)
78=Cherokee 4WD-4 Dr.(1984-86)
85=CJ-5 (1981-83)
86=CJ-6(1981)
87=CJ-7(1981-86)
88=CJ-8, Scrambler(1981-86)
64=Comanche 2WD-6 Ft. Box(1986)
66=Comanche 2WD-7 Ft. Box(1986)
63=Comanche 4WD-6 Ft. Box(1986)
65=Comanche 4WD-7 Ft. Box(1986)
15=Grand Wagoneer 4 Dr.(1984-86)
25=J-10 Truck 7 Ft. Box(1981-84)
26=J10 Truck 8 Ft. Box(1981-86)
27=J-20 Truck 8 Ft. Box(1981-86)
15=Wagoneer 4 Dr.(1981-83)
75=Wagoneer 4WD-4 Dr.(1984-86)

BODY
CJ=CJ-5, CJ-6, CJ-7, CJ-8, Scrambler(1981-86)
MJ=Comanche Pickup(1986)

STYLES
SJ=Wagoneer(1981-83), Grand Wagoneer(1984-86), Cherokee(1981-83), J-10, J-20(1981-86)
XJ=Wagoneer(1984-86), Cherokee(1984-86)

AR = Use as Required - = Non Illustrated Part P.A.R. = Paint as Required

ENGINE MOUNTING SJ CHEROKEE, SJ WAGONEER, J10, J20
Figure 9C-2000

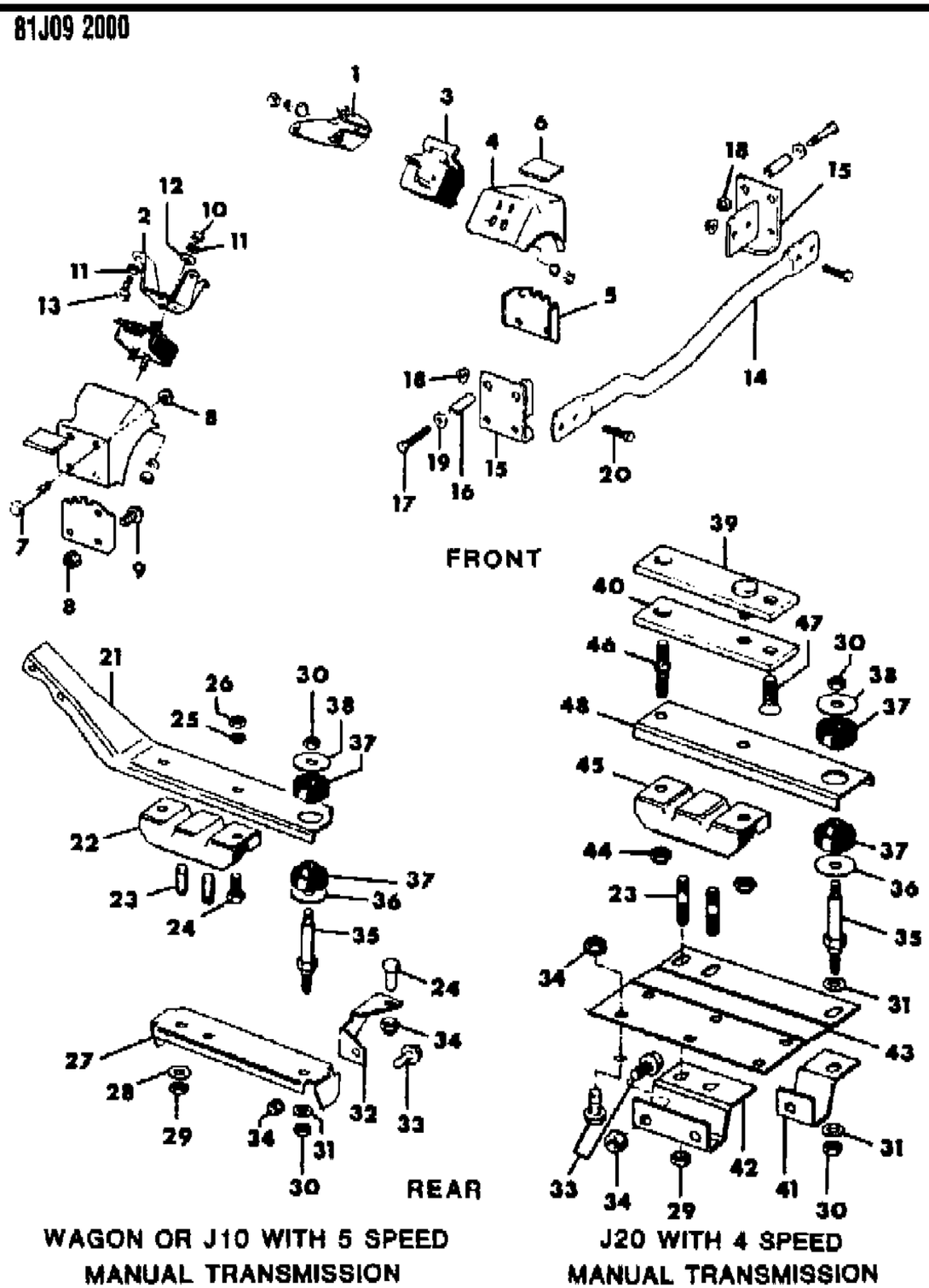

ITEM	PART NUMBER	QTY	BODY	MODEL	DESCRIPTION
1	J318 6274	1			BRACKET, Engine, Left
2	J318 6275	1			BRACKET, Engine, Right
3	J321 9194	2			MOUNT, Engine ***
4	5200 3004	2			BRACKET
5	J535 2448	2			REINFORCEMENT
6	J099 8373	2			REINFORCEMENT
7	J942 1204	4			BOLT
8	J400 3909	6			NUT
9	J400 5664	2			BOLT
10	J400 3869	AR			NUT
11	J012 0382	AR			WASHER, Lock
12	J012 0394	4			WASHER, Plain
13	J018 0121	6			BOLT
14	9200 0008	1			BAR, Tie, EXPORT, Severe Use
15	9200 0009	2			BRACKET, EXPORT, Severe Use
16	9200 0010	2			SPACER, EXPORT, Severe Use
17	J400 6864	AR			BOLT, EXPORT, Severe Use
18	J400 6445	AR			NUT, EXPORT, Severe Use
19	J400 3926	AR			WASHER, EXPORT, Severe Use
20	J018 0124	AR			BOLT, EXPORT, Severe Use
21	J536 4455	1			BRACKET
22	J137 0910	1			INSULATOR
23	J400 4819	AR			STUD
24	J018 0145	2			BOLT
25	J012 0383	1			WASHER
26	J027 1501	1			NUT
27	J536 3123	1			BRACKET
28	J400 1120	2			WASHER
29	J941 3215	AR			NUT
30	J941 1783	AR			NUT
31	J400 1104	AR			WASHER
32	J536 3122	1			BRACKET
33	J941 9856	AR			BOLT
34	J400 3956	AR			NUT
35	J535 8879	1			STUD
36	J094 1399	1			WASHER
37	J094 5266	2			INSULATOR
38	J094 5269	AR			WASHER
39	J535 9785	1			SPACER

MODEL CODES

16=Cherokee 2 Dr.(1981-83)
17=Cherokee 2 Dr.(1981-83)
73=Cherokee 2WD-2 Dr.(1984-86)
74=Cherokee 2WD-4 Dr.(1984-86)
18=Cherokee 4 Dr.(1981-83)
77=Cherokee 4WD-2 Dr.(1984-86)
78=Cherokee 4WD-4 Dr.(1984-86)
85=CJ-5 (1981-83)
86=CJ-6(1981)
87=CJ-7(1981-86)
88=CJ-8, Scrambler(1981-86)
64=Comanche 2WD-6 Ft. Box(1986)
66=Comanche 2WD-7 Ft. Box(1986)
63=Comanche 4WD-6 Ft. Box(1986)
65=Comanche 4WD-7 Ft. Box(1986)
15=Grand Wagoneer 4 Dr.(1984-86)
25=J-10 Truck 7 Ft. Box(1981-84)
26=J10 Truck 8 Ft. Box(1981-86)
27=J-20 Truck 8 Ft. Box(1981-86)
15=Wagoneer 4 Dr.(1981-83)
75=Wagoneer 4WD-4 Dr.(1984-86)

BODY
CJ=CJ-5, CJ-6, CJ-7, CJ-8, Scrambler(1981-86)
MJ=Comanche Pickup(1986)

STYLES
SJ=Wagoneer(1981-83), Grand Wagoneer(1984-86), Cherokee(1981-83), J-10, J-20(1981-86)
XJ=Wagoneer(1984-86), Cherokee(1984-86)

AR = Use as Required - = Non Illustrated Part P.A.R. = Paint as Required

« RETURN TO GROUP INDEX »

ENGINE MOUNTING SJ CHEROKEE, SJ WAGONEER, J10, J20
Figure 9C-2000

81J09 2000

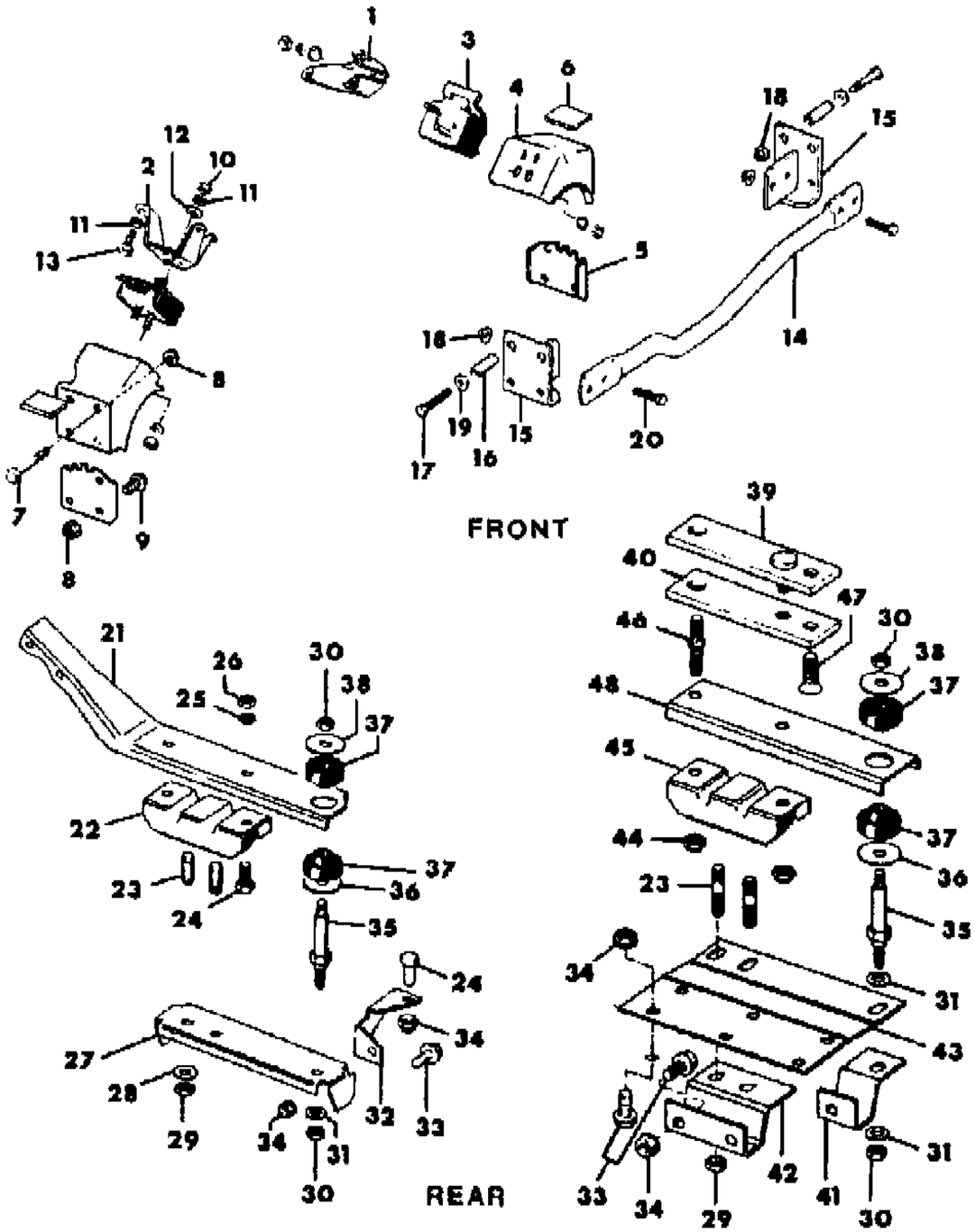

WAGON OR J10 WITH 5 SPEED MANUAL TRANSMISSION

J20 WITH 4 SPEED MANUAL TRANSMISSION

ITEM	PART NUMBER	QTY	BODY	MODEL	DESCRIPTION
40	J535 9781	1			SPACER
41	J535 9770	1			BRACKET
42	J535 9771	1			BRACKET
43	J535 9757	1			PLATE
44	J400 3975	2			NUT
45	J137 0910	1			INSULATOR
46	J400 6461	1			STUD
47	J400 6460	1			BOLT
48	J535 9776	1			BRACKET

MODEL CODES

16=Cherokee 2 Dr.(1981-83)
17=Cherokee 2 Dr.(1981-83)
73=Cherokee 2WD-2 Dr.(1984-86)
74=Cherokee 2WD-4 Dr.(1984-86)
18=Cherokee 4 Dr.(1981-83)
77=Cherokee 4WD-2 Dr.(1984-86)
78=Cherokee 4WD-4 Dr.(1984-86)
85=CJ-5 (1981-83)
86=CJ-6(1981)
87=CJ-7(1981-86)
88=CJ-8, Scrambler(1981-86)
64=Comanche 2WD-6 Ft. Box(1986)
66=Comanche 2WD-7 Ft. Box(1986)
63=Comanche 4WD-6 Ft. Box(1986)
65=Comanche 4WD-7 Ft. Box(1986)
15=Grand Wagoneer 4 Dr.(1984-86)
25=J-10 Truck 7 Ft. Box(1981-84)
26=J10 Truck 8 Ft. Box(1981-86)
27=J-20 Truck 8 Ft. Box(1981-86)
15=Wagoneer 4 Dr.(1981-83)
75=Wagoneer 4WD-4 Dr.(1984-86)

BODY
CJ=CJ-5, CJ-6, CJ-7, CJ-8, Scrambler(1981-86)
MJ=Comanche Pickup(1986)

STYLES
SJ=Wagoneer(1981-83), Grand Wagoneer(1984-86), Cherokee(1981-83), J-10, J-20(1981-86)
XJ=Wagoneer(1984-86), Cherokee(1984-86)

AR = Use as Required - = Non Illustrated Part P.A.R. = Paint as Required

« RETURN TO GROUP INDEX

GROUP 11 - EXHAUST

ILLUSTRATION TITLE	GROUP-FIG. NO.
EXHAUST SYSTEMS	
EXHAUST SYSTEM DIESEL ENGINE, EXPORT CJ-5,6,7,8	Fig. 11-100
EXHAUST SYSTEM FOUR CYLINDER ENGINE CJ-5,6,7,8, SCRAMBLER	Fig. 11-200
EXHAUST SYSTEM SIX CYLINDER ENGINE CJ-5,6,7,8, SCRAMBLER	Fig. 11-300
EXHAUST SYSTEM EIGHT CYLINDER ENGINE CJ-5,6,7,8, SCRAMBLER	Fig. 11-400
EXHAUST SYSTEM DIESEL ENGINE, EXPORT XJ CHEROKEE, XJ WAGONEER, COMANCHE	Fig. 11-500
EXHAUST SYSTEM FOUR CYLINDER ENGINE XJ CHEROKEE, XJ WAGONEER, COMANCHE	Fig. 11-600
EXHAUST SYSTEM SIX CYLINDER ENGINE XJ CHEROKEE, XJ WAGONEER, COMANCHE	Fig. 11-700
EXHAUST SYSTEM, US SIX AND EIGHT CYLINDER ENGINES SJ CHEROKEE, SJ WAGONEER	Fig. 11-800
EXHAUST SYSTEM, CANADA, NON-REGULATED MARKETS SIX AND EIGHT CYLINDER ENGINES SJ CHEROKEE, SJ WAGONEER	Fig. 11-900
EXHAUST SYSTEM, US SIX AND EIGHT CYLINDER ENGINES J10, J20	Fig. 11-1000
EXHAUST SYSTEM, CANADA, NON-REGULATED MARKETS SIX AND EIGHT CYLINDER ENGINES J10, J20	Fig. 11-1100

ILLUSTRATION NOT AVAILABLE AT TIME OF PUBLICATION

EXHAUST SYSTEM DIESEL ENGINE, EXPORT CJ-5,6,7,8
Figure 11-100

81J11 100

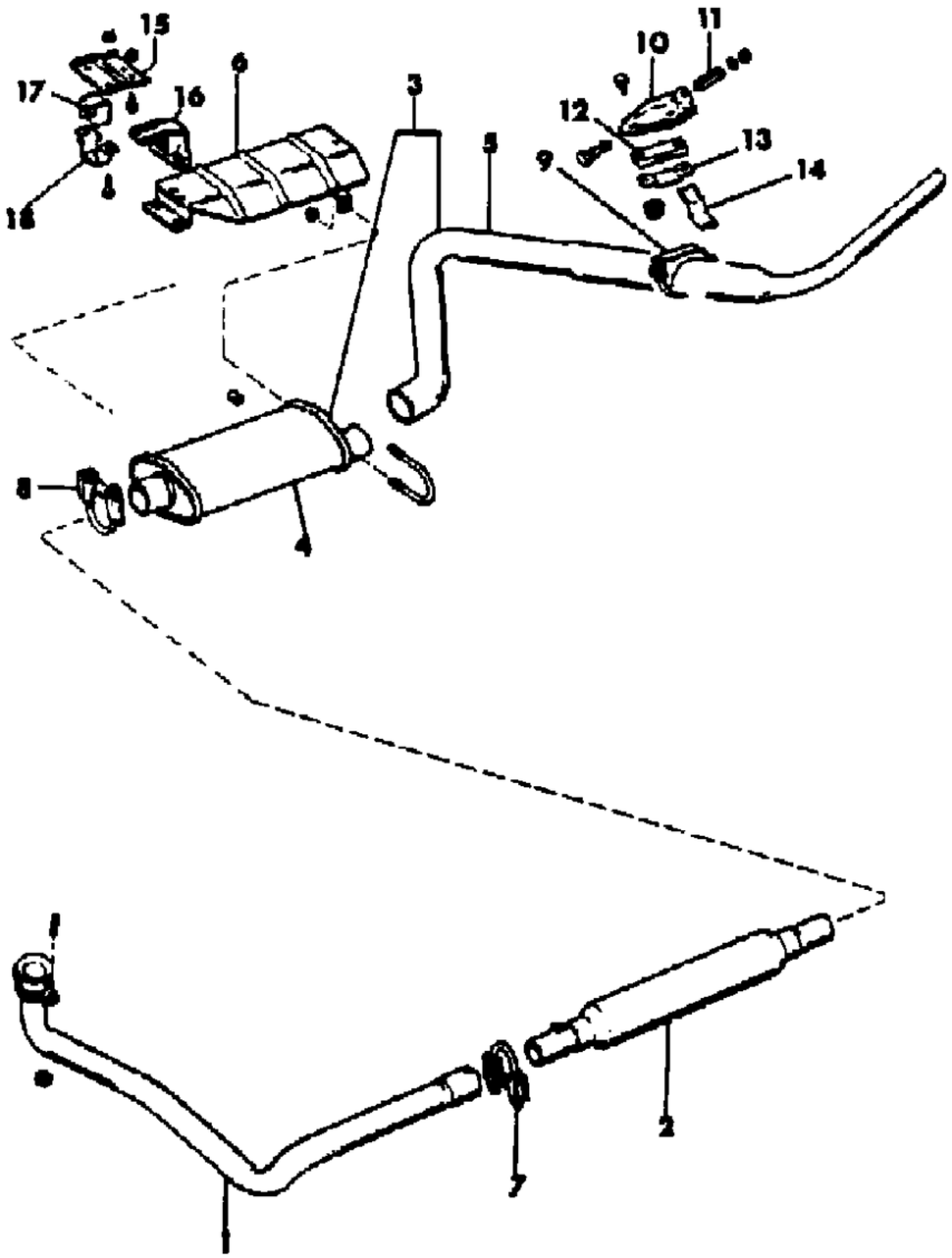

ITEM	PART NUMBER	QTY	BODY	MODEL	DESCRIPTION
1					PIPE, Exhaust, Front
	J536 2793	1		85	1981
	J536 3582	1		85	1982-83: Non-Regulated Markets
	J536 2793	1		85	1981-83: Australian Design Rules, Economic Commisson of Europe
	J536 1232	1		86	1981
	J536 2795	1		87	1981
	J536 3584	1		87	1982-85: Non-Regulated Markets
	J536 2795	1		87	1982-85: Australian Design Rules, Economic Commission of Europe
	J536 3775	1		87	1986
	J536 2794	1		88	1981
	J536 3586	1		88	1982-85: Non-Regulated Markets
	J536 2794	1		88	1982-85: Australian Design Rules, Economic Commission of Europe
	J536 4221	1		88	1986
2					RESONATOR ***
	J536 3611	1			1982-86
3					TAILPIPE ASSEMBLY ***
	J536 4049	1		85,87	1982-85: Non-Regulated Markets
	J536 4049	1		87	1986
	J536 4047	1		88	1982-86: Without Step Bumper
	J536 4153	1		88	1982-86: With Step Bumper
4					MUFFLER
	J536 2758	1		85,87,8	1981-85
	J536 1481	1		86	1981
5					PIPE, Tail
	J536 2712	1		85,87	1981-85: Australian Design Rules, Economic Commission of Europe, Non-Regulated Markets
	J536 1400	1		86	Australian Design Rules, Economic Commission of Europe, Non-Regulated Markets
	J536 2692	1		88	1981-85: Australian Design Rules, Economic Commission of Europe, Non-Regulated Markets
6					SHIELD, Heat
	J536 7047	1		85,86,8	1981: Australian Design Rules, Economic Commission of Europe, Non-Regulated Markets
	J535 7047	1		85,87,8	1982-85: Australian Design Rules, Economic Commission of Europe

MODEL CODES

16=Cherokee 2 Dr.(1981-83)	78=Cherokee 4WD-4 Dr.(1984-86)	64=Comanche 2WD-6 Ft. Box(1986)	25=J-10 Truck 7 Ft. Box(1981-84)
17=Cherokee 2 Dr.(1981-83)	85=CJ-5 (1981-83)	66=Comanche 2WD-7 Ft. Box(1986)	26=J10 Truck 8 Ft. Box(1981-86)
73=Cherokee 2WD-2 Dr.(1984-86)	86=CJ-6(1981)	63=Comanche 4WD-6 Ft. Box(1986)	27=J-20 Truck 8 Ft. Box(1981-86)
74=Cherokee 2WD-4 Dr.(1984-86)	87=CJ-7(1981-86)	65=Comanche 4WD-7 Ft. Box(1986)	15=Wagoneer 4 Dr.(1981-83)
18=Cherokee 4 Dr.(1981-83)	88=CJ-8, Scrambler(1981-86)	15=Grand Wagoneer 4 Dr.(1984-86)	75=Wagoneer 4WD-4 Dr.(1984-86)
77=Cherokee 4WD-2 Dr.(1984-86)			

BODY
CJ=CJ-5, CJ-6, CJ-7, CJ-8, Scrambler(1981-86)
MJ=Comanche Pickup(1986)

STYLES
SJ=Wagoneer(1981-83), Grand Wagoneer(1984-86), Cherokee(1981-83), J-10, J-20(1981-86)
XJ=Wagoneer(1984-86), Cherokee(1984-86)

AR = Use as Required - = Non Illustrated Part P.A.R. = Paint as Required

EXHAUST SYSTEM DIESEL ENGINE, EXPORT CJ-5,6,7,8
Figure 11-100

81J11 100

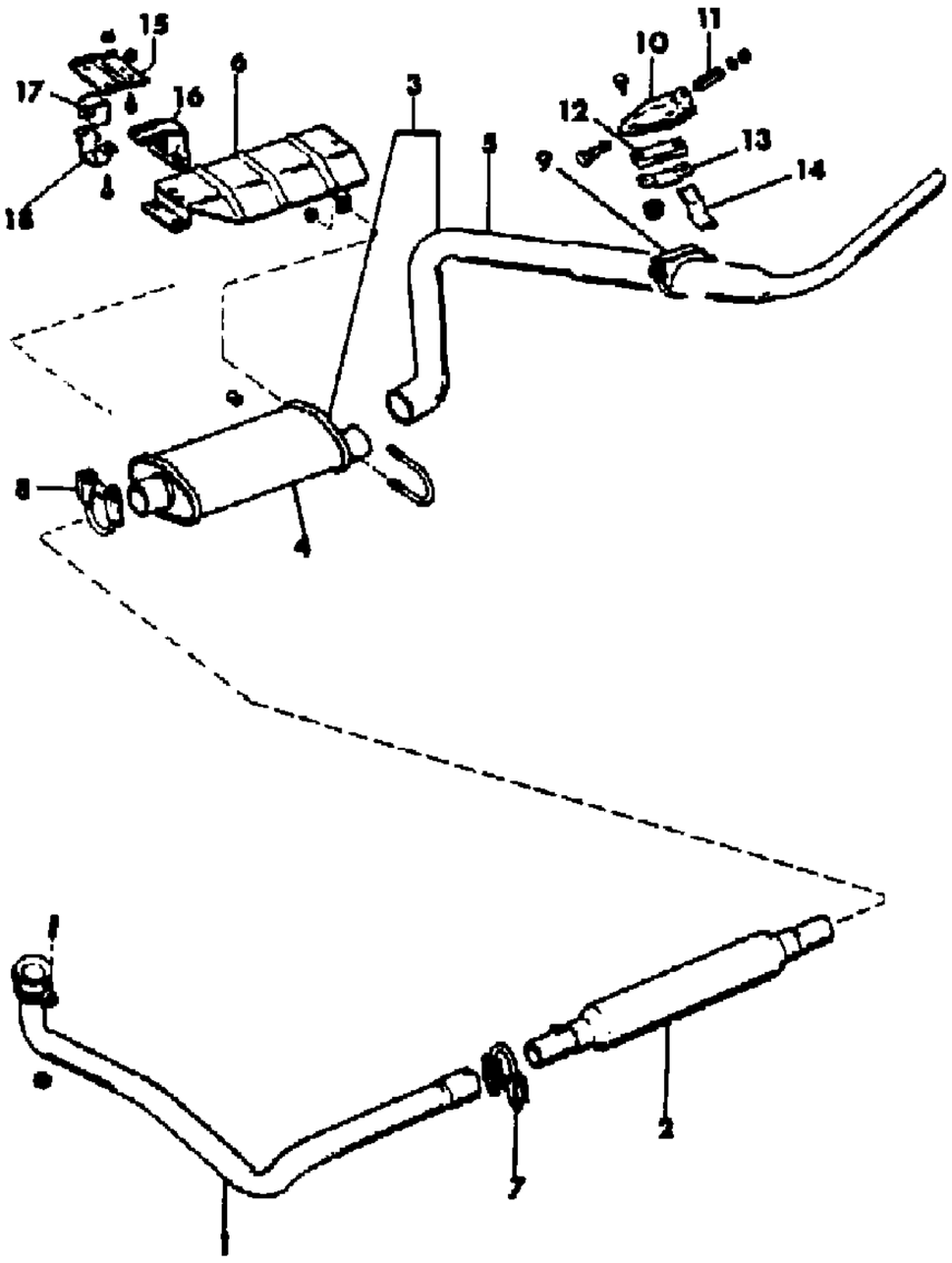

ITEM	PART NUMBER	QTY	BODY	MODEL	DESCRIPTION
	J536 3560	1		85,87,8	1982-85: Without Australian Design Rules, Without Economic Commission of Europe
	J536 3560	1		87,88	1986
7	5200 1860	1			CLAMP
8	J813 4108	1			CLAMP
9					CLAMP
	J812 6663	1		87	1981-85
	J812 6665	1		88	1986
10	J536 3893	1			BRACKET
11	J536 6497	1			SPACER
12	J536 3891	1			INSULATOR
13	J536 3890	1			BRACKET
13	J536 3890	1			BRACKET
14	J536 3892	1			BRACKET
15	J536 3555	1			PLATE
16	J536 3556	1			BRACKET
17	J536 2502	1			INSULATOR
18	J536 2500	1			BRACKET

MODEL CODES

16=Cherokee 2 Dr.(1981-83)
17=Cherokee 2 Dr.(1981-83)
73=Cherokee 2WD-2 Dr.(1984-86)
74=Cherokee 2WD-4 Dr.(1984-86)
18=Cherokee 4 Dr.(1981-83)
77=Cherokee 4WD-2 Dr.(1984-86)
78=Cherokee 4WD-4 Dr.(1984-86)
85=CJ-5 (1981-83)
86=CJ-6(1981)
87=CJ-7(1981-86)
88=CJ-8, Scrambler(1981-86)
64=Comanche 2WD-6 Ft. Box(1986)
66=Comanche 2WD-7 Ft. Box(1986)
63=Comanche 4WD-6 Ft. Box(1986)
65=Comanche 4WD-7 Ft. Box(1986)
15=Grand Wagoneer 4 Dr.(1984-86)
25=J-10 Truck 7 Ft. Box(1981-84)
26=J10 Truck 8 Ft. Box(1981-86)
27=J-20 Truck 8 Ft. Box(1981-86)
15=Wagoneer 4 Dr.(1981-83)
75=Wagoneer 4WD-4 Dr.(1984-86)

BODY
CJ=CJ-5, CJ-6, CJ-7, CJ-8, Scrambler(1981-86)
MJ=Comanche Pickup(1986)

STYLES
SJ=Wagoneer(1981-83), Grand Wagoneer(1984-86), Cherokee(1981-83), J-10, J-20(1981-86)
XJ=Wagoneer(1984-86), Cherokee(1984-86)

AR = Use as Required - = Non Illustrated Part P.A.R. = Paint as Required

« RETURN TO GROUP INDEX

EXHAUST SYSTEM FOUR CYLINDER ENGINE CJ-5,6,7,8, SCRAMBLER
Figure 11-200

81J11 200A

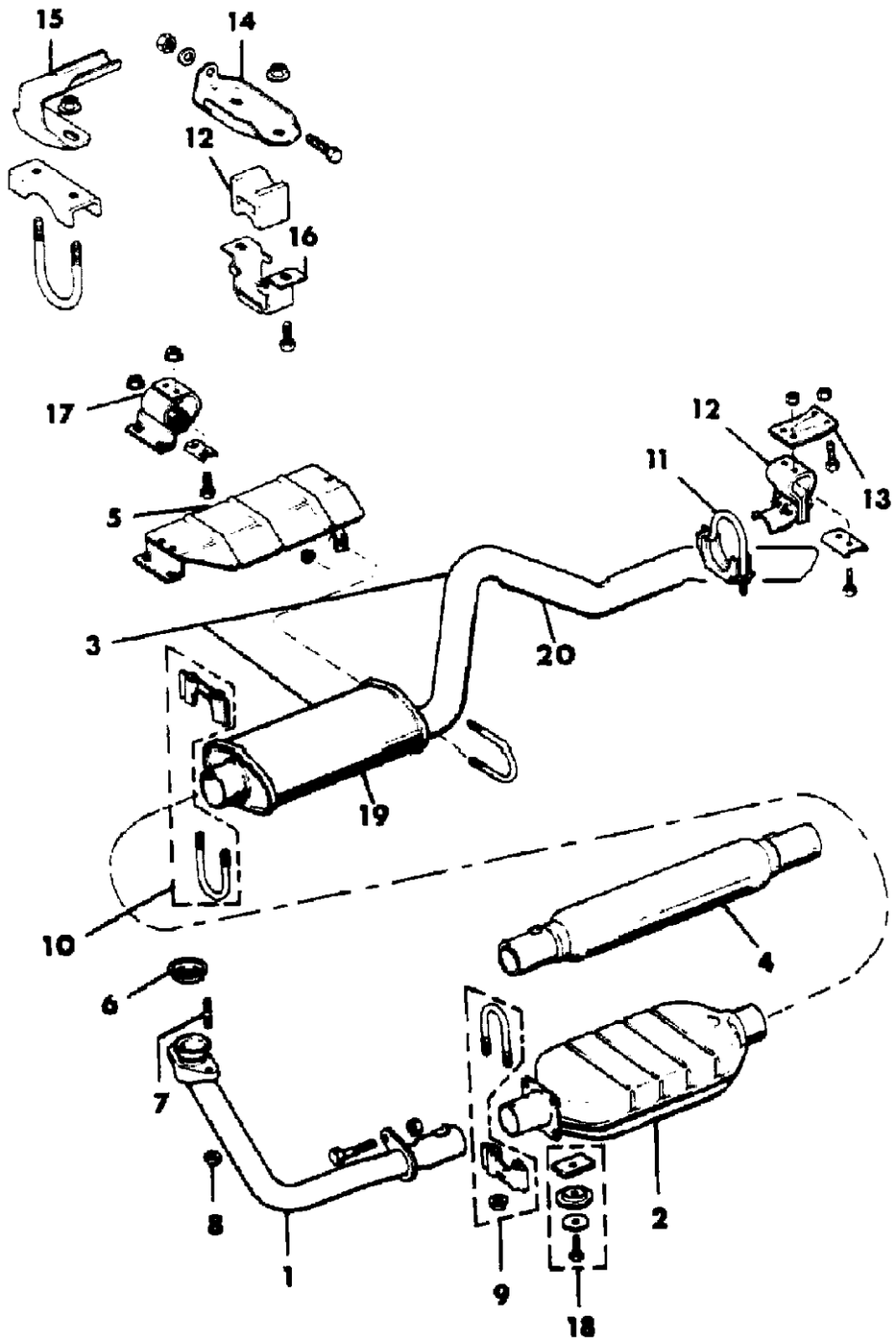

ITEM	PART NUMBER	QTY	BODY	MODEL	DESCRIPTION
1					PIPE, Exhaust, Front
	J536 2779	1		85	1981: Without CANADA
	J536 2762	1		85	1981: CANADA, with Four Speed Transmission
	J536 3600	1		85	1982: Without CANADA
	J536 3576	1		85	1982: CANADA
	J536 3576	1		85	1982: EXPORT
	J536 4523	1		85	1983: Without CANADA
	J536 4529	1		85	1983: CANADA
	J536 4529	1		85	1983: EXPORT
	J536 1364	1		86	1981: EXPORT, Non-Regulated Markets, with Four Speed Transmission
	J536 2780	1		87	1981: Without CANADA, with Four Speed Transmission
	J536 2764	1		87	1981: CANADA, with Four Speed Transmission
	J536 2764	1		87	1981: EXPORT, with Four Speed Transmission
	J536 2542	1		87	1981: Without CANADA, with Automatic Transmission
	J536 2867	1		87	1981: CANADA, with Automatic Transmission
	J536 3602	1		87	1982: CANADA
	J536 3578	1		87	1982: CANADA
	J536 3578	1		87	1982: EXPORT
	J536 4524	1		87	1983: Without CANADA
	J536 4530	1		87	1983: CANADA
	J536 4530	1		87	1983: EXPORT
	J536 4663	1		87	1984-86: EXPORT
	J536 4648	1		87,88	1983-84: Without California
	J536 4648	1		87,88	1985-86
	J536 3085	1		88	1981: Without CANADA, with Four Speed Transmission
	J536 2763	1		88	1981: CANADA, with Four Speed Transmission
	J536 2763	1		88	1981: EXPORT, with Four Speed Transmission
	J536 3083	1		88	1981: Without CANADA, with Automatic Transmission
	J536 2366	1		88	1981: CANADA, with Automatic Transmission
	J536 3604	1		88	1982: Without CANADA
	J536 3580	1		88	1982: CANADA
	J536 3580	1		88	1982: EXPORT
	J536 4525	1		88	1983: Without CANADA
	J536 4531	1		88	1983: CANADA
	J536 4531	1		88	1983: EXPORT
	J536 4737	1		88	1984-86: EXPORT
2					CONVERTER, Catalytic
	J537 0047	1			1981: 49 States

MODEL CODES
16=Cherokee 2 Dr.(1981-83)
17=Cherokee 2 Dr.(1981-83)
73=Cherokee 2WD-2 Dr.(1984-86)
74=Cherokee 2WD-4 Dr.(1984-86)
18=Cherokee 4 Dr.(1981-83)
77=Cherokee 4WD-2 Dr.(1984-86)
78=Cherokee 4WD-4 Dr.(1984-86)
85=CJ-5 (1981-83)
86=CJ-6(1981)
87=CJ-7(1981-86)
88=CJ-8, Scrambler(1981-86)
64=Comanche 2WD-6 Ft. Box(1986)
66=Comanche 2WD-7 Ft. Box(1986)
63=Comanche 4WD-6 Ft. Box(1986)
65=Comanche 4WD-7 Ft. Box(1986)
15=Grand Wagoneer 4 Dr.(1984-86)
25=J-10 Truck 7 Ft. Box(1981-84)
26=J10 Truck 8 Ft. Box(1981-86)
27=J-20 Truck 8 Ft. Box(1981-86)
15=Wagoneer 4 Dr.(1981-83)
75=Wagoneer 4WD-4 Dr.(1984-86)

BODY
CJ=CJ-5, CJ-6, CJ-7, CJ-8, Scrambler(1981-86)
MJ=Comanche Pickup(1986)

STYLES
SJ=Wagoneer(1981-83), Grand Wagoneer(1984-86), Cherokee(1981-83), J-10, J-20(1981-86)
XJ=Wagoneer(1984-86), Cherokee(1984-86)

AR = Use as Required - = Non Illustrated Part P.A.R. = Paint as Required

EXHAUST SYSTEM FOUR CYLINDER ENGINE CJ-5,6,7,8, SCRAMBLER
Figure 11-200

81J11 200A

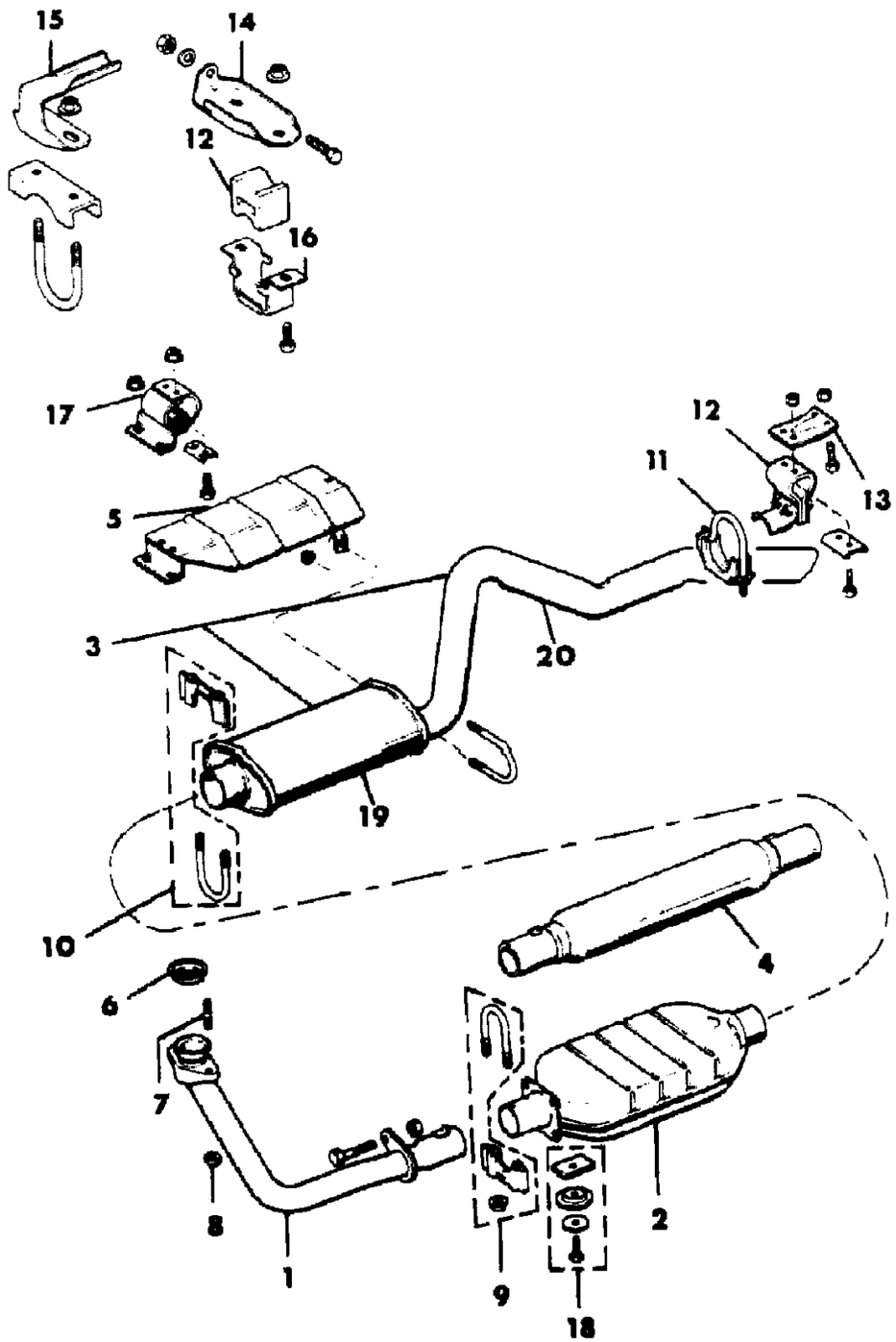

ITEM	PART NUMBER	QTY	BODY	MODEL	DESCRIPTION
	J537 0048	1			1981-83: California
	J537 0049	1			1982: 49 States
	J537 0129	1			1984-86
3					TAILPIPE ASSEMBLY ***
	J536 2725	1		85,87	1981: US
	J536 4049	1		85,87	1982-83: CANADA
	J536 3571	1			1982-83: Without CANADA
	J536 3566	1			1984-86
	J536 3080	1		88	1981: US
	J536 4153	1		88	1982-83: CANADA, with Step Bumper
	J536 4047	1		88	1982-83: CANADA, without Step Bumper
	J536 4151	1		88	1984-86: CANADA, with Step Bumper
	J536 4045	1		88	1984-86: CANADA, without Step Bumper
4					RESONATOR ***
	J536 3904	1			CANADA, EXPORT, without DIESEL
5					SHIELD, Heat
	J536 3776	1			1981: US
	J535 7047	1			1981: CANADA
	J536 3563	1			1982-83: Without CANADA
	J536 3560	1			1982-86: CANADA
	J536 3560	1			1984-86
6					SEAL
	J324 1445	1			1982
	3300 1058	1			1983
7					STUD
	J420 0404	2			1981-82
	5300 0709	2			1983
	J400 7109	2			1984-86
8					NUT
	J420 0405	2			1981-82
9	5200 1860	2			CLAMP
10	J813 4108	AR			CLAMP
11	J812 6665	1			CLAMP
12					INSULATOR
	J536 3088	1		85,87	1981
	J536 2502	1		88	1981
	J536 3891	1			1982-86
13					BRACKET
	J535 5402	1			1981

MODEL CODES

16=Cherokee 2 Dr.(1981-83)	78=Cherokee 4WD-4 Dr.(1984-86)	64=Comanche 2WD-6 Ft. Box(1986)	25=J-10 Truck 7 Ft. Box(1981-84)
17=Cherokee 2 Dr.(1981-83)	85=CJ-5 (1981-83)	66=Comanche 2WD-7 Ft. Box(1986)	26=J10 Truck 8 Ft. Box(1981-86)
73=Cherokee 2WD-2 Dr.(1984-86)	86=CJ-6(1981)	63=Comanche 4WD-6 Ft. Box(1986)	27=J-20 Truck 8 Ft. Box(1981-86)
74=Cherokee 2WD-4 Dr.(1984-86)	87=CJ-7(1981-86)	65=Comanche 4WD-7 Ft. Box(1986)	15=Wagoneer 4 Dr.(1981-83)
18=Cherokee 4 Dr.(1981-83)	88=CJ-8, Scrambler(1981-86)	15=Grand Wagoneer 4 Dr.(1984-86)	75=Wagoneer 4WD-4 Dr.(1984-86)
77=Cherokee 4WD-2 Dr.(1984-86)			

BODY
CJ=CJ-5, CJ-6, CJ-7, CJ-8, Scrambler(1981-86)
MJ=Comanche Pickup(1986)

STYLES
SJ=Wagoneer(1981-83), Grand Wagoneer(1984-86), Cherokee(1981-83), J-10, J-20(1981-86)
XJ=Wagoneer(1984-86), Cherokee(1984-86)

AR = Use as Required - = Non Illustrated Part P.A.R. = Paint as Required

EXHAUST SYSTEM FOUR CYLINDER ENGINE CJ-5,6,7,8, SCRAMBLER
Figure 11-200

81J11 200A

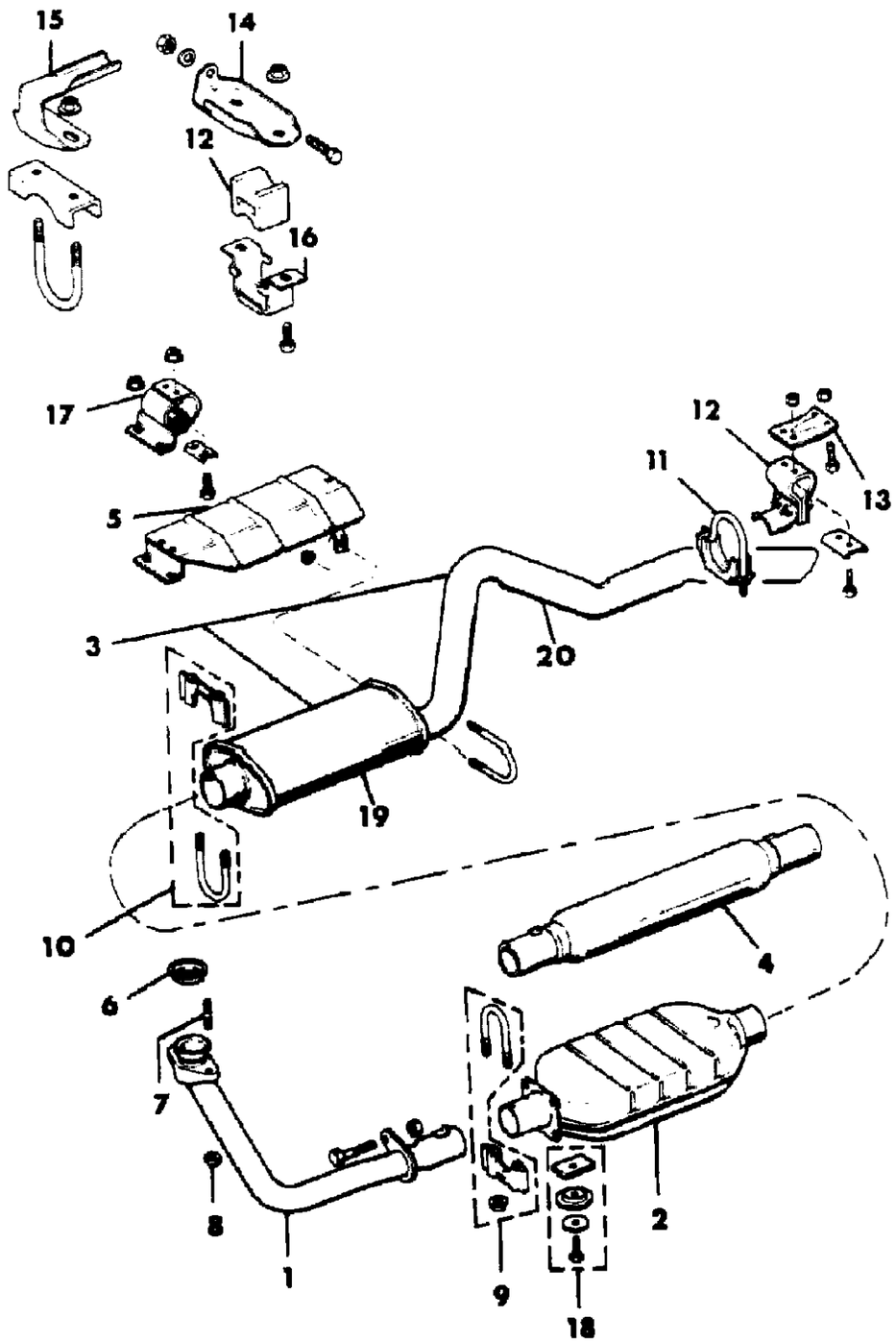

ITEM	PART NUMBER	QTY	BODY	MODEL	DESCRIPTION
14					BRACKET
	J536 2925	1		88	1981
	J536 3893	1			1982-86
15					BRACKET
	J536 2501	1		88	1981
	J536 3892	1			1982-86
16					BRACKET
	J536 2500	1		88	1981
17					INSULATOR
	J536 6065	1			1981
	J536 2502	1			1982-86
18	J813 0186	1			PLUG KIT ***
19					MUFFLER
	J536 2758	1			1981: CANADA
20					PIPE, Tail
	J536 2712	1		85,87	1981: CANADA
	J536 2692	1		88	1981: CANADA

MODEL CODES
16=Cherokee 2 Dr.(1981-83)
17=Cherokee 2 Dr.(1981-83)
73=Cherokee 2WD-2 Dr.(1984-86)
74=Cherokee 2WD-4 Dr.(1984-86)
18=Cherokee 4 Dr.(1981-83)
77=Cherokee 4WD-2 Dr.(1984-86)
78=Cherokee 4WD-4 Dr.(1984-86)
85=CJ-5 (1981-83)
86=CJ-6(1981)
87=CJ-7(1981-86)
88=CJ-8, Scrambler(1981-86)
64=Comanche 2WD-6 Ft. Box(1986)
66=Comanche 2WD-7 Ft. Box(1986)
63=Comanche 4WD-6 Ft. Box(1986)
65=Comanche 4WD-7 Ft. Box(1986)
15=Grand Wagoneer 4 Dr.(1984-86)
25=J-10 Truck 7 Ft. Box(1981-84)
26=J10 Truck 8 Ft. Box(1981-86)
27=J-20 Truck 8 Ft. Box(1981-86)
15=Wagoneer 4 Dr.(1981-83)
75=Wagoneer 4WD-4 Dr.(1984-86)

BODY
CJ=CJ-5, CJ-6, CJ-7, CJ-8, Scrambler(1981-86)
MJ=Comanche Pickup(1986)

STYLES
SJ=Wagoneer(1981-83), Grand Wagoneer(1984-86), Cherokee(1981-83), J-10, J-20(1981-86)
XJ=Wagoneer(1984-86), Cherokee(1984-86)

AR = Use as Required - = Non Illustrated Part P.A.R. = Paint as Required

« RETURN TO GROUP INDEX

EXHAUST SYSTEM SIX CYLINDER ENGINE CJ-5,6,7,8, SCRAMBLER
Figure 11-300

81J11 300

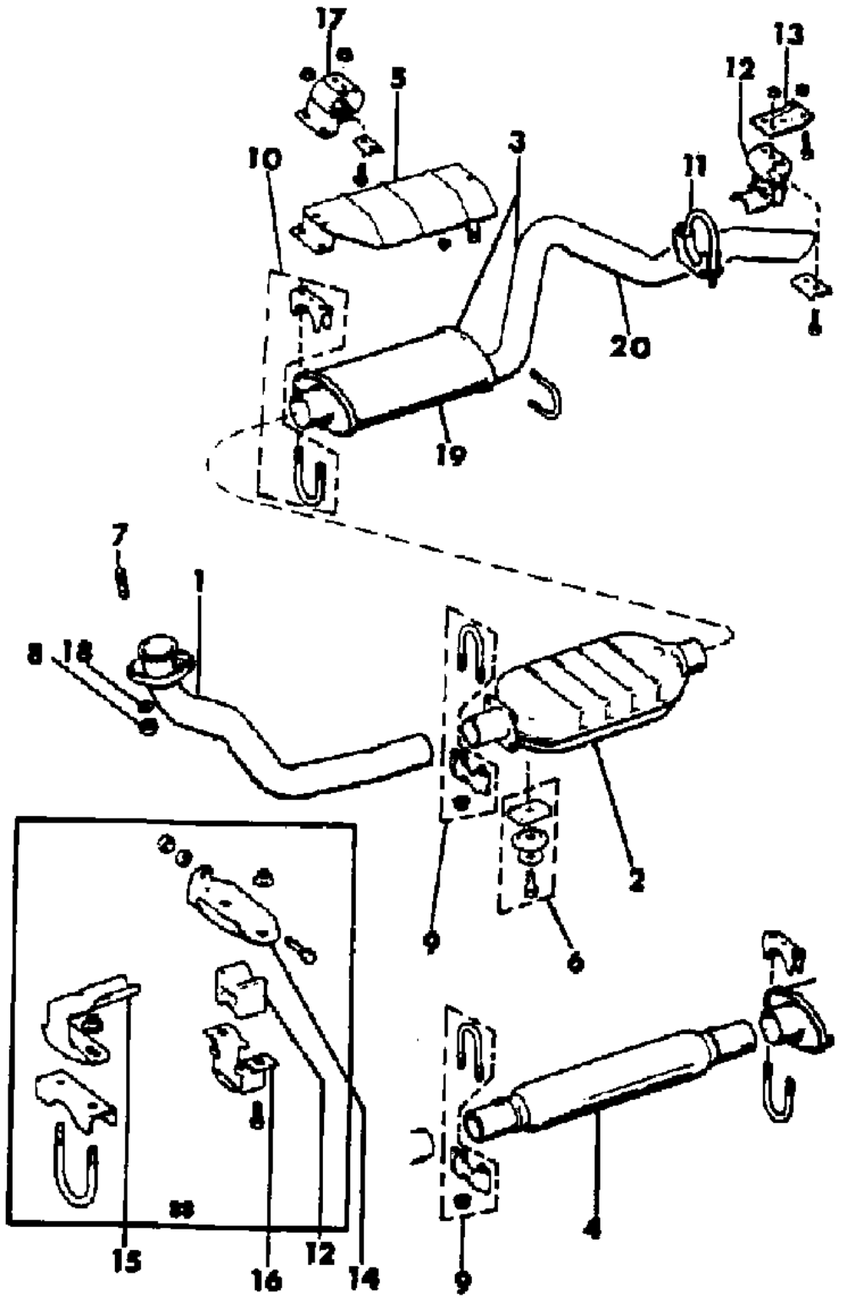

ITEM	PART NUMBER	QTY	BODY	MODEL	DESCRIPTION
1					PIPE, Exhaust, Front
	J536 2685	1		85	1981: Without California, without CANADA, with Four Speed Transmission
	J536 2715	1		85	1981: California, with Four Speed Transmission
	J536 2676	1		85	1981: CANADA, with Four Speed Transmission
	J536 2676	1		85	1981: EXPORT, Australian Design Rules, Economic Commission of Europe, Non-Regulated Markets, with Four Speed Transmission
	J536 3594	1		85	1982: Without California, without CANADA
	J536 3588	1		85	1982: California
	J536 3588	1		85	1982-83: CANADA
	J536 3588	1		85	1982-83: EXPORT
	J536 4311	1		85	1983
	J536 1354	1		86	1981: EXPORT, Australian Design Rules, Economic Commission of Europe, Non-Regulated Markets, with SR-4 Transmission
	J536 1877	1		86	1981: EXPORT, Australian Design Rules, Economic Commission of Europe, Non-Regulated Markets, with T-176 Transmission
	J536 2687	1		87	1981: Without California, without CANADA, with SR-4 Transmission
	J536 2718	1		87	1981: California, with SR-4 Transmission
	J536 2678	1		87	1981: CANADA, with SR-4 Transmission
	J536 2678	1		87	1981: EXPORT, Australian Design Rules, Economic Commission of Europe, Non-Regulated Markets, with S-4 Transmission
	J536 2688	1		87	1981: Without California, without CANADA, with T-176, T-177 Transmission
	J536 2717	1		87	1981: California, with T-176, T-177 Transmission
	J536 2681	1		87	1981: CANADA, with T-176, T-177 Transmission
	J536 2681	1		87	1981: EXPORT, Australian Design Rules, Economic Commission of Europe, Non-Regulated Markets, with T-176, T-177 Transmission
	J536 2686	1		87	1981: Without California, without CANADA, with Automatic Transmission
	J536 2716	1		87	1981: California, with Automatic Transmission
	J536 2679	1		87	1981: CANADA, with Automatic Transmission

MODEL CODES

16=Cherokee 2 Dr.(1981-83)
17=Cherokee 2 Dr.(1981-83)
73=Cherokee 2WD-2 Dr.(1984-86)
74=Cherokee 2WD-4 Dr.(1984-86)
18=Cherokee 4 Dr.(1981-83)
77=Cherokee 4WD-2 Dr.(1984-86)
78=Cherokee 4WD-4 Dr.(1984-86)
85=CJ-5 (1981-83)
86=CJ-6(1981)
87=CJ-7(1981-86)
88=CJ-8, Scrambler(1981-86)
64=Comanche 2WD-6 Ft. Box(1986)
66=Comanche 2WD-7 Ft. Box(1986)
63=Comanche 4WD-6 Ft. Box(1986)
65=Comanche 4WD-7 Ft. Box(1986)
15=Grand Wagoneer 4 Dr.(1984-86)
25=J-10 Truck 7 Ft. Box(1981-84)
26=J10 Truck 8 Ft. Box(1981-86)
27=J-20 Truck 8 Ft. Box(1981-86)
15=Wagoneer 4 Dr.(1981-83)
75=Wagoneer 4WD-4 Dr.(1984-86)

BODY
CJ=CJ-5, CJ-6, CJ-7, CJ-8, Scrambler(1981-86)
MJ=Comanche Pickup(1986)

STYLES
SJ=Wagoneer(1981-83), Grand Wagoneer(1984-86), Cherokee(1981-83), J-10, J-20(1981-86)
XJ=Wagoneer(1984-86), Cherokee(1984-86)

AR = Use as Required - = Non Illustrated Part P.A.R. = Paint as Required

EXHAUST SYSTEM SIX CYLINDER ENGINE CJ-5,6,7,8, SCRAMBLER
Figure 11-300

81J11 300

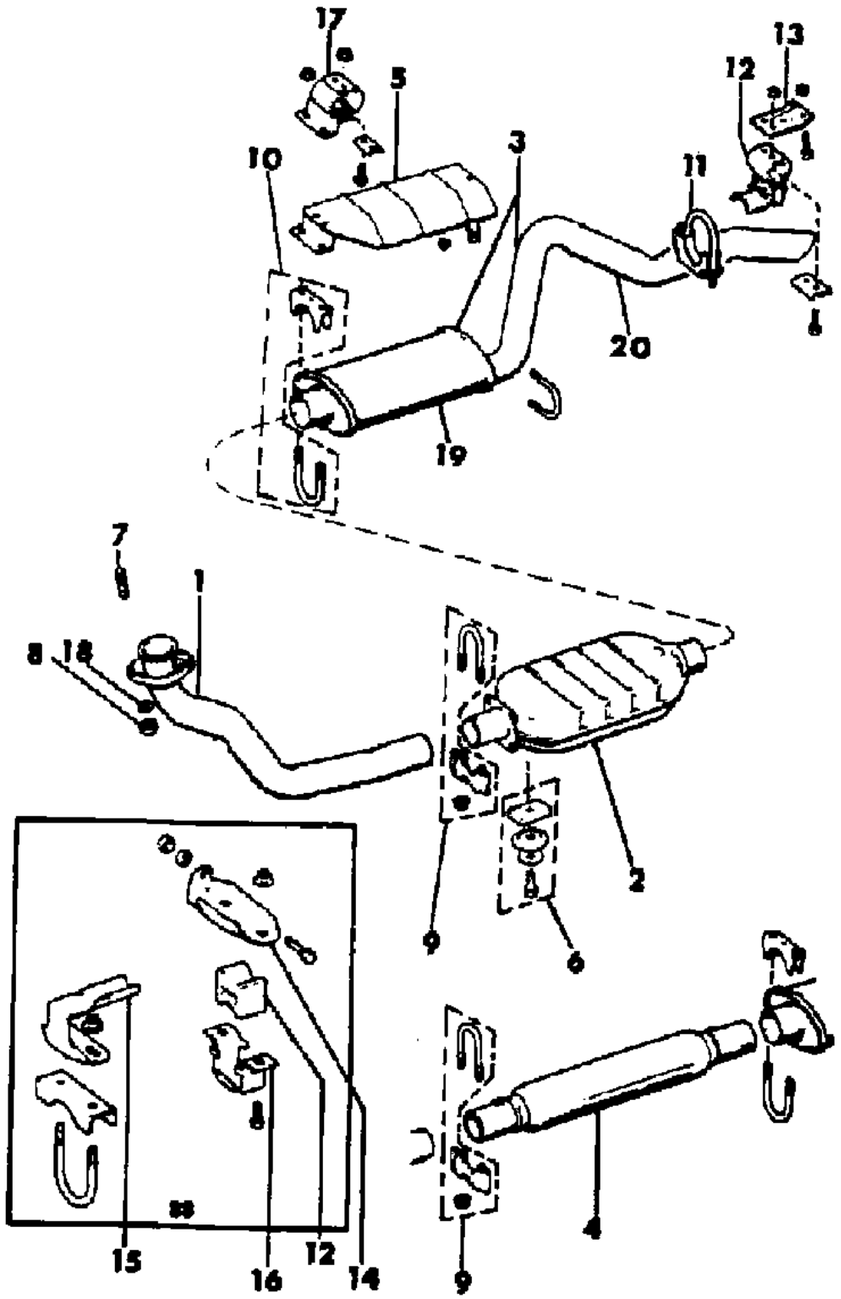

ITEM	PART NUMBER	QTY	BODY	MODEL	DESCRIPTION
	J536 2679	1		87	1981: EXPORT, Australian Design Rules, Economic Commission of Europe, Non-Regulated Markets, with Automatic Transmission
	J536 3596	1		87	1982: Without California, without CANADA
	J536 3590	1		87	1982: California
	J536 3590	1		87	1982-86: CANADA
	J536 3590	1		87	1982-86: EXPORT
	J536 3590	1		87	1982: Japan
	J536 4312	1		87	1983-85: Japan
	J536 4312	1		87-88	1983-86
	J536 3054	1		88	1981: Without California, without CANADA, with SR-4 Transmission
	J536 3059	1		88	1981: California, with SR-4 Transmission
	J536 2677	1		88	1981: CANADA, with SR-4 Transmission
	J536 2677	1		88	1981: EXPORT, Autralian Design Rules, Economic Commission of Europe, Non-Regulated Markets, with SR-4 Transmission
	J536 3055	1		88	1981: Without California, without CANADA, with T-176, T-177 Transmission
	J536 3058	1		88	1981: California, with T-176, T-177 Transmission
	J536 2680	1		88	1981: CANADA, with T-176, T-177 Transmission
	J536 2680	1		88	1981: EXPORT, Australian Design Rules, Economic Commission of Europe, Non-Regulated Markets, with T-176, T-177 Transmission
	J536 3053	1		88	1981: Without California, without CANADA, with Automatic Transmission
	J536 3057	1		88	1981: California, With Automatic Transmission
	J536 3051	1		88	1981: CANADA, With Automatic Transmission
	J536 3051	1		88	1981: EXPORT, Australian Design Rules, Economic Commission of Europe, Non-Regulated Markets, with Automatic Transmission
	J536 3598	1		88	1982: Without California, without CANADA
	J536 3592	1		88	1982: California
	J536 3592	1		88	1982-86: CANADA
	J536 3592	1		88	1982-86: EXPORT
2					CONVERTER, Catalytic
	J537 0049	1			1981: Without California
	J537 0050	1			1981: California
	J537 0049	1			1982: Without California
	J537 0117	1			1982: California

MODEL CODES

16=Cherokee 2 Dr.(1981-83)	78=Cherokee 4WD-4 Dr.(1984-86)	64=Comanche 2WD-6 Ft. Box(1986)	25=J-10 Truck 7 Ft. Box(1981-84)
17=Cherokee 2 Dr.(1981-83)	85=CJ-5 (1981-83)	66=Comanche 2WD-7 Ft. Box(1986)	26=J10 Truck 8 Ft. Box(1981-86)
73=Cherokee 2WD-2 Dr.(1984-86)	86=CJ-6(1981)	63=Comanche 4WD-6 Ft. Box(1986)	27=J-20 Truck 8 Ft. Box(1981-86)
74=Cherokee 2WD-4 Dr.(1984-86)	87=CJ-7(1981-86)	65=Comanche 4WD-7 Ft. Box(1986)	15=Wagoneer 4 Dr.(1981-83)
18=Cherokee 4 Dr.(1981-83)	88=CJ-8, Scrambler(1981-86)	15=Grand Wagoneer 4 Dr.(1984-86)	75=Wagoneer 4WD-4 Dr.(1984-86)
77=Cherokee 4WD-2 Dr.(1984-86)			

BODY
CJ=CJ-5, CJ-6, CJ-7, CJ-8, Scrambler(1981-86)
MJ=Comanche Pickup(1986)

STYLES
SJ=Wagoneer(1981-83), Grand Wagoneer(1984-86), Cherokee(1981-83), J-10, J-20(1981-86)
XJ=Wagoneer(1984-86), Cherokee(1984-86)

AR = Use as Required - = Non Illustrated Part P.A.R. = Paint as Required

EXHAUST SYSTEM SIX CYLINDER ENGINE CJ-5,6,7,8, SCRAMBLER
Figure 11-300

81J11 300

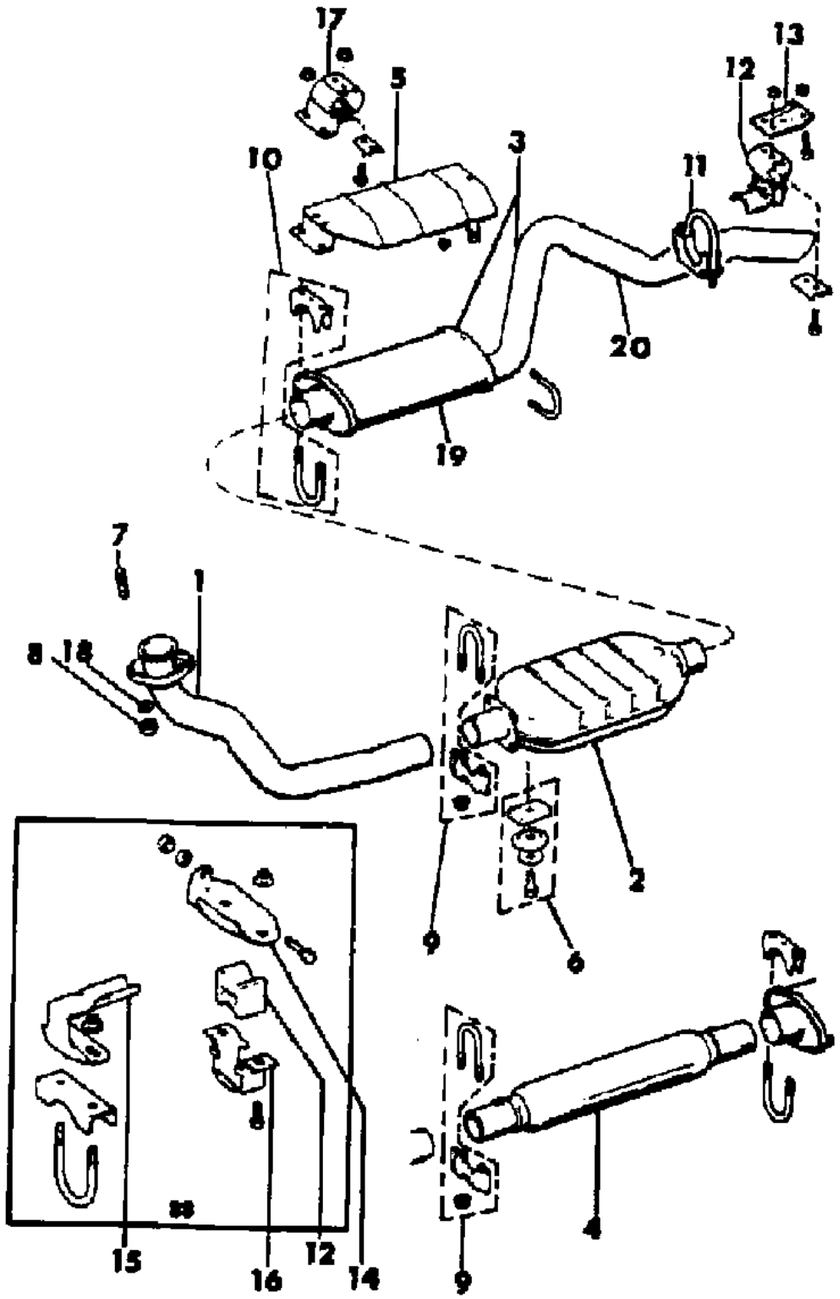

ITEM	PART NUMBER	QTY	BODY	MODEL	DESCRIPTION
	J537 0129	1			1983-86: Without CANADA
	J536 4465	1			1983-85: Japan
3					TAILPIPE ASSEMBLY ***
	J536 2723	1		85,87	1981: Without California, without CANADA
	J536 2804	1		85,87	1981: Without CANADA
	J536 2691	1			1981: CANADA
	J536 2691	1		85,87,8	1981: EXPORT, Australian Design Rules, Economic Commission of Europe, Non-Regulated Markets
	J536 1399	1		86	1981: EXPORT, Australian Design Rules, Economic Commission of Europe, Non-Regulated Markets
	J536 2150	1		88	1981: Without California
	J536 2517	1		88	1981: California
	J536 3569	1			1982: Without California
	J536 3566	1			1982: California
	J536 4032	1		85,87	1982-83: CANADA
	J536 4032	1		85,87	1982-86: EXPORT
	J536 4032	1		87	1982-85: Japan
	J536 4045	1		88	1982-86: Without Step Bumper
	J536 4151	1		88	1982-86: With Step Bumper
	J536 3566	1			1983-86
4					RESONATOR ***
	J536 3611	1			CANADA, EXPORT
5					SHIELD, Heat
	J536 8776	1			1981: Without California
	J536 2646	1			1981: California
	J535 7047	1			1981: CANADA
	J536 3563	1			1982-83: California, CANADA
	J536 3560	1			1982-86
6	J813 0186	1			PLUG PACKAGE ***
7	J400 6547	2			STUD
8	J400 6567	2			NUT
9	5200 1860	2			CLAMP
10	J812 4109	AR			CLAMP
11	J813 6663	AR			CLAMP
12					INSULATOR
	J536 3088	1		85,87	1981
	J536 2502	1		88	1981
	J536 3891	1			1982-86
13	J535 5402	2			BRACKET

MODEL CODES

16=Cherokee 2 Dr.(1981-83)	78=Cherokee 4WD-4 Dr.(1984-86)	64=Comanche 2WD-6 Ft. Box(1986)	25=J-10 Truck 7 Ft. Box(1981-84)
17=Cherokee 2 Dr.(1981-83)	85=CJ-5 (1981-83)	66=Comanche 2WD-7 Ft. Box(1986)	26=J10 Truck 8 Ft. Box(1981-86)
73=Cherokee 2WD-2 Dr.(1984-86)	86=CJ-6(1981)	63=Comanche 4WD-6 Ft. Box(1986)	27=J-20 Truck 8 Ft. Box(1981-86)
74=Cherokee 2WD-4 Dr.(1984-86)	87=CJ-7(1981-86)	65=Comanche 4WD-7 Ft. Box(1986)	15=Wagoneer 4 Dr.(1981-83)
18=Cherokee 4 Dr.(1981-83)	88=CJ-8, Scrambler(1981-86)	15=Grand Wagoneer 4 Dr.(1984-86)	75=Wagoneer 4WD-4 Dr.(1984-86)
77=Cherokee 4WD-2 Dr.(1984-86)			

BODY
CJ=CJ-5, CJ-6, CJ-7, CJ-8, Scrambler(1981-86)
MJ=Comanche Pickup(1986)

STYLES
SJ=Wagoneer(1981-83), Grand Wagoneer(1984-86), Cherokee(1981-83), J-10, J-20(1981-86)
XJ=Wagoneer(1984-86), Cherokee(1984-86)

AR = Use as Required - = Non Illustrated Part P.A.R. = Paint as Required

EXHAUST SYSTEM SIX CYLINDER ENGINE CJ-5,6,7,8, SCRAMBLER
Figure 11-300

81J11 300

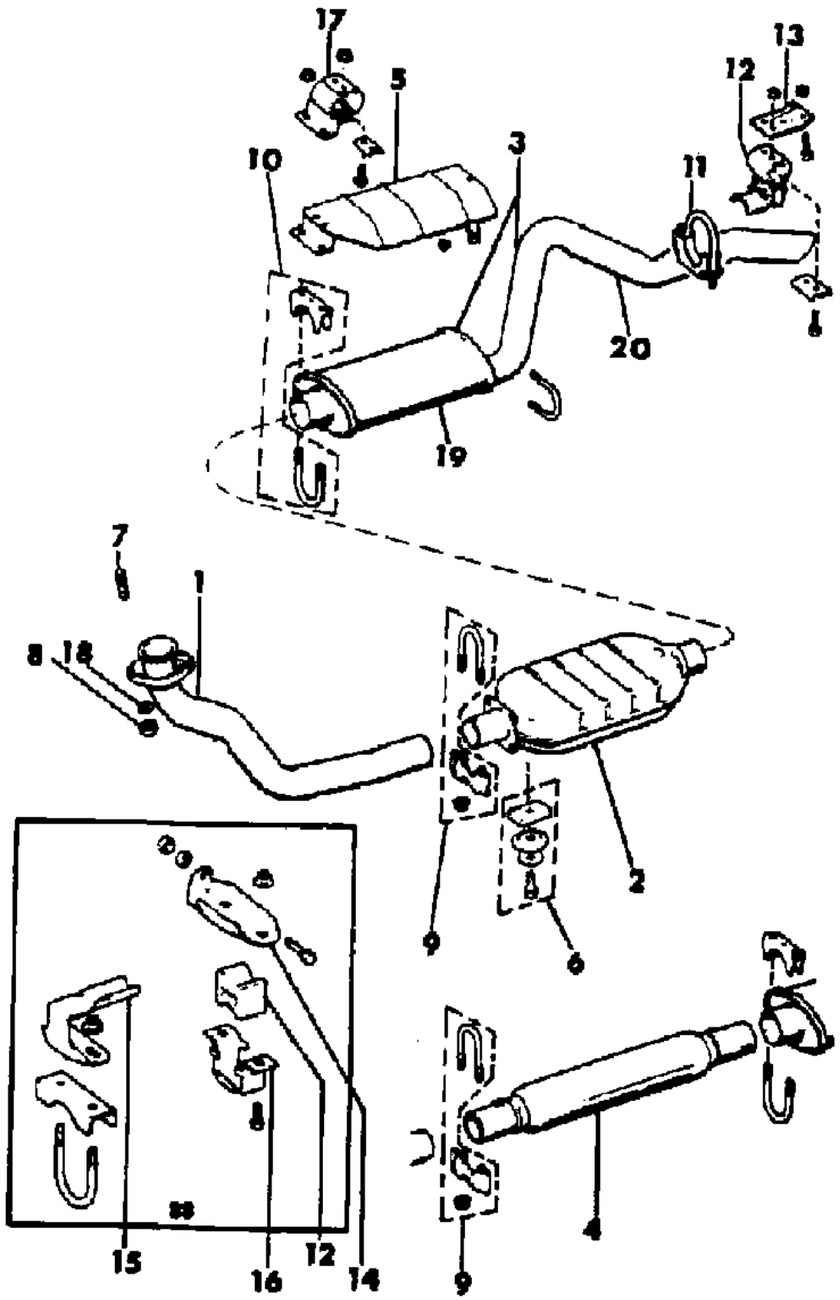

ITEM	PART NUMBER	QTY	BODY	MODEL	DESCRIPTION
14					BRACKET
	J536 2925	1		88	1981
	J536 3893	1		88	1982-86
15					BRACKET
	J536 2501	1		88	1981
	J536 3892	1		88	1982-86
16					BRACKET
	J536 2500	1		88	1981
17					INSULATOR
	J535 6065	1			1981
	J536 2502	1			1982-86
18	J400 3803	2			WASHER
19					MUFFLER
	J536 2691	1			1981: CANADA
20					PIPE, Tail
	J536 2712	1		85,87	1981: CANADA
	J536 2692	1		88	1981: CANADA

MODEL CODES

16=Cherokee 2 Dr.(1981-83)	78=Cherokee 4WD-4 Dr.(1984-86)	64=Comanche 2WD-6 Ft. Box(1986)	25=J-10 Truck 7 Ft. Box(1981-84)
17=Cherokee 2 Dr.(1981-83)	85=CJ-5 (1981-83)	66=Comanche 2WD-7 Ft. Box(1986)	26=J10 Truck 8 Ft. Box(1981-86)
73=Cherokee 2WD-2 Dr.(1984-86)	86=CJ-6(1981)	63=Comanche 4WD-6 Ft. Box(1986)	27=J-20 Truck 8 Ft. Box(1981-86)
74=Cherokee 2WD-4 Dr.(1984-86)	87=CJ-7(1981-86)	65=Comanche 4WD-7 Ft. Box(1986)	15=Wagoneer 4 Dr.(1981-83)
18=Cherokee 4 Dr.(1981-83)	88=CJ-8, Scrambler(1981-86)	15=Grand Wagoneer 4 Dr.(1984-86)	75=Wagoneer 4WD-4 Dr.(1984-86)
77=Cherokee 4WD-2 Dr.(1984-86)			

BODY
CJ=CJ-5, CJ-6, CJ-7, CJ-8, Scrambler(1981-86)
MJ=Comanche Pickup(1986)

STYLES
SJ=Wagoneer(1981-83), Grand Wagoneer(1984-86), Cherokee(1981-83), J-10, J-20(1981-86)
XJ=Wagoneer(1984-86), Cherokee(1984-86)

AR = Use as Required - = Non Illustrated Part P.A.R. = Paint as Required

« RETURN TO GROUP INDEX

EXHAUST SYSTEM EIGHT CYLINDER ENGINE CJ-5,6,7,8, SCRAMBLER
Figure 11-400

81J11 400

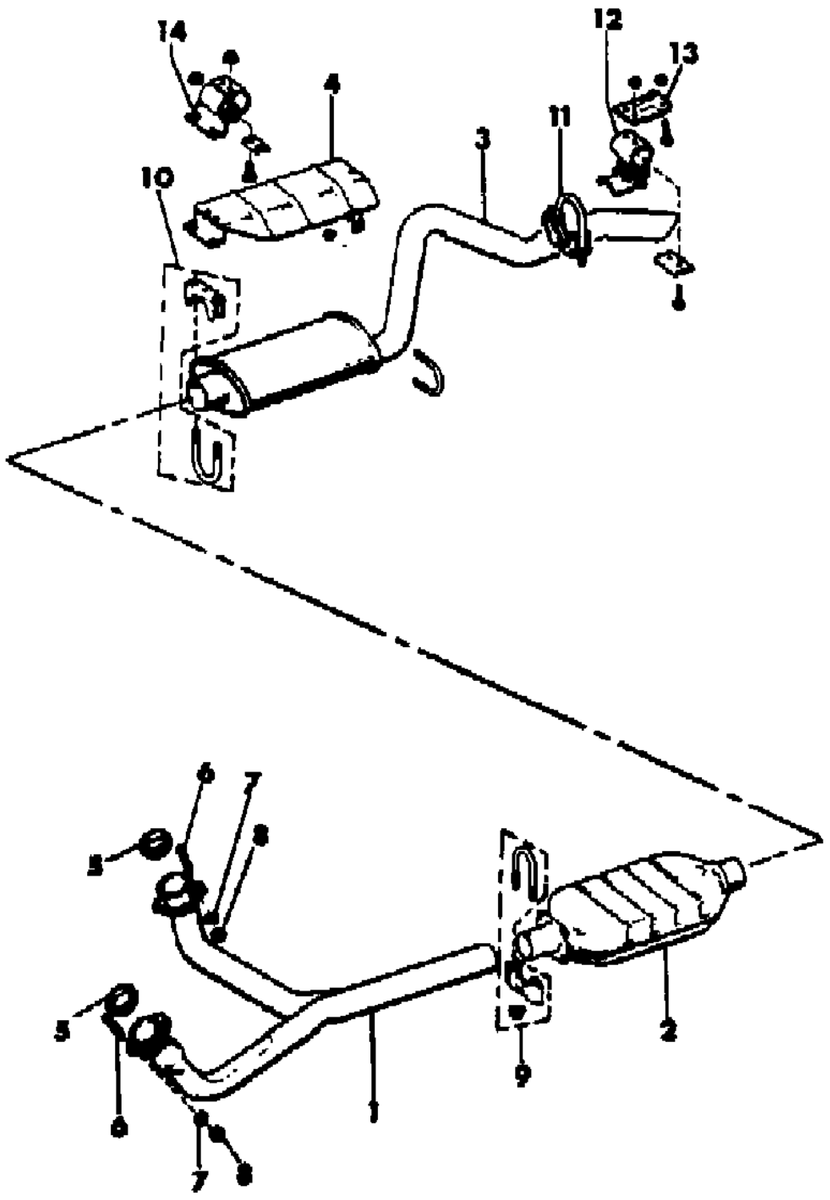

ITEM	PART NUMBER	QTY	BODY	MODEL	DESCRIPTION
1					PIPE, Exhaust, Front
	J536 2555	1		85	1981: Without California, without CANADA, with Four Speed Transmission
	J536 2640	1		85	1981: CANADA, with Four Speed Transmission
	J536 2640	1		85	1981: EXPORT, Economic Commission of Europe, Non-Regulated Markets, with Four Speed Transmission
	J536 2556	1		87	1981: Without California, without CANADA, with Four Speed Transmission
	J536 2641	1		87	1981: CANADA, with Four Speed Transmission
	J536 2641	1		87	1981: EXPORT, Economic Commission of EUROPE, Non-Regulated Markets, with Four Speed Transmission
	J536 2635	1		87	1981: Without California, without CANADA, with Automatic Transmission
	J536 2638	1		87	1981: CANADA, with Automatic Transmission
	J536 2638	1		87	1981: EXPORT, Economic Commission of Europe, Non-Regulated Markets, with Automatic Transmission
2	J537 0051	1			CONVERTER, Catalytic
3					TAILPIPE ASSEMBLY ***
	J536 2724	1		85,87	1981
4	J535 8776	1			SHIELD, Heat
5	J322 3547	1			SEAL
6	J400 4109	1			STUD
7	J400 3803	4			WASHER
8	J535 1688	4			NUT
9	J535 8827	1			CLAMP
10	J813 4109	1			CLAMP
11	J813 6663	AR			CLAMP
12	J536 3088	1			INSULATOR
13	J535 5402	1			BRACKET
14	J535 6065	1			INSULATOR

MODEL CODES
16=Cherokee 2 Dr.(1981-83)
17=Cherokee 2 Dr.(1981-83)
73=Cherokee 2WD-2 Dr.(1984-86)
74=Cherokee 2WD-4 Dr.(1984-86)
18=Cherokee 4 Dr.(1981-83)
77=Cherokee 4WD-2 Dr.(1984-86)
78=Cherokee 4WD-4 Dr.(1984-86)
85=CJ-5 (1981-83)
86=CJ-6(1981)
87=CJ-7(1981-86)
88=CJ-8, Scrambler(1981-86)
64=Comanche 2WD-6 Ft. Box(1986)
66=Comanche 2WD-7 Ft. Box(1986)
63=Comanche 4WD-6 Ft. Box(1986)
65=Comanche 4WD-7 Ft. Box(1986)
15=Grand Wagoneer 4 Dr.(1984-86)
25=J-10 Truck 7 Ft. Box(1981-84)
26=J10 Truck 8 Ft. Box(1981-86)
27=J-20 Truck 8 Ft. Box(1981-86)
15=Wagoneer 4 Dr.(1981-83)
75=Wagoneer 4WD-4 Dr.(1984-86)

BODY
CJ=CJ-5, CJ-6, CJ-7, CJ-8, Scrambler(1981-86)
MJ=Comanche Pickup(1986)

STYLES
SJ=Wagoneer(1981-83), Grand Wagoneer(1984-86), Cherokee(1981-83), J-10, J-20(1981-86)
XJ=Wagoneer(1984-86), Cherokee(1984-86)

AR = Use as Required - = Non Illustrated Part P.A.R. = Paint as Required

« RETURN TO GROUP INDEX

EXHAUST SYSTEM DIESEL ENGINE, EXPORT XJ CHEROKEE, XJ WAGONEER, COMANCHE
Figure 11-500

81J11 500

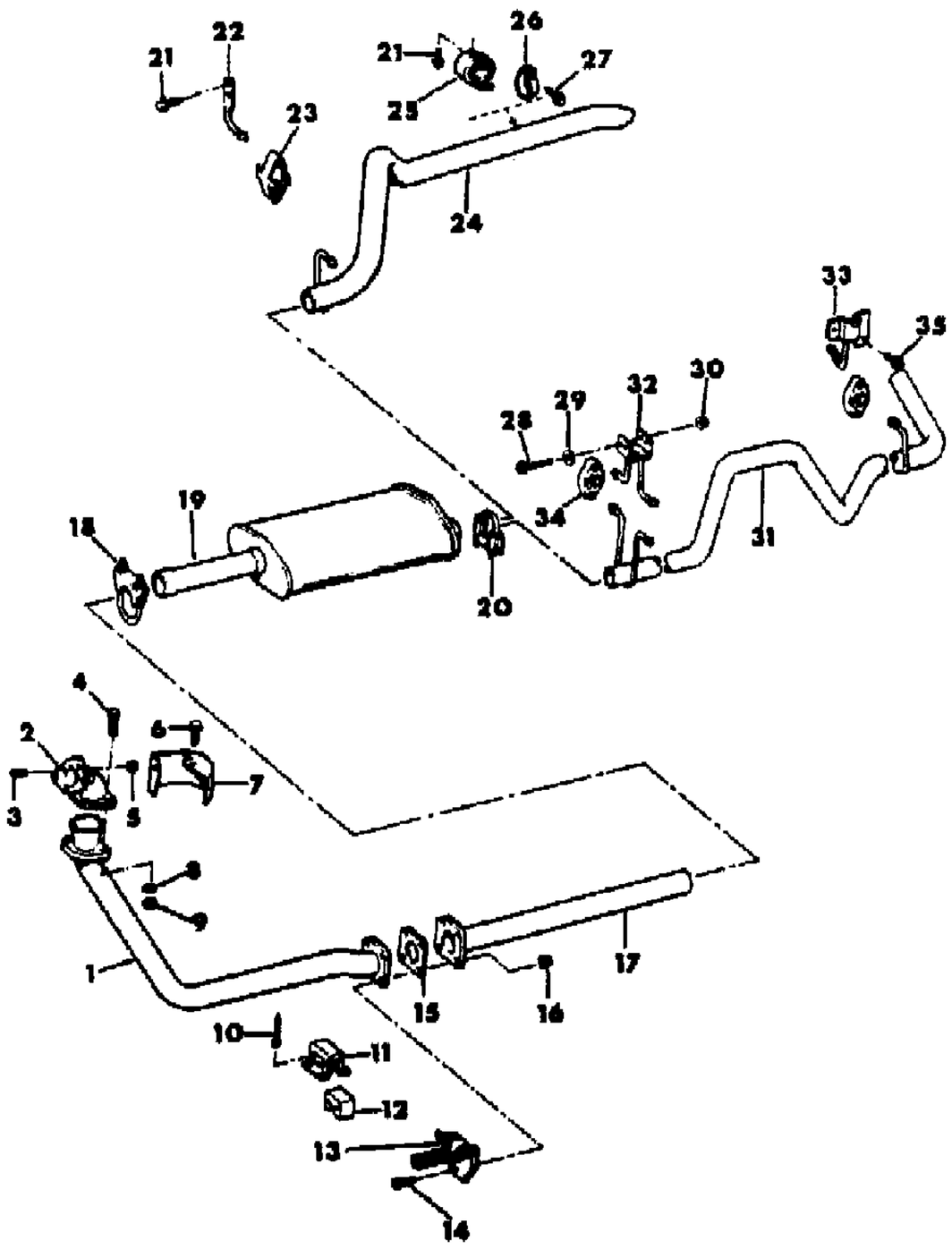

ITEM	PART NUMBER	QTY	BODY	MODEL	DESCRIPTION
1	5200 1819	1			PIPE, Exhaust, Front
2	5300 1750	1			ADAPTER, Turbocharger
3	3420 2088	4			STUD
4	J400 7109	2			STUD
5	3420 1918	4			NUT
6	1150 4986	1			BOLT
7	3300 2103	1			SHIELD, Adapter
8	J400 1104	2			WASHER
9	J400 6567	2			NUT
10	3420 2083	4			RIVET
11	5300 0104	1			BRACKET
12	5300 0101	1			INSULATOR
13	5300 1473	1			SUPPORT
14	J812 5845	AR			BOLT
15	J322 6666	1			GASKET
16	J400 4008	4			NUT
17	5300 0846	1			PIPE, Exhaust Adapter
18	5200 1860	1			CLAMP
19					MUFFLER
	8350 1930	1	XJ		1984-85
	8350 2649	1	XJ		1986
	8350 2657	1	MJ		1986
20	8330 0060	1			CLAMP
21					SCREW
	J420 0402	AR			1984-85
	3420 1193	AR			1986
22	5300 1085	1	XJ		HANGER
23	5300 1377	1	XJ		SUPPORT
24					TAILPIPE ASSY ***
	8350 1931	1	XJ		1984-85
	8350 2647	1	XJ		1986
25					HANGER
	J536 3088	1	XJ		1984-85
	5200 2794	1	XJ		1986
26	5300 1474	1	XJ		CLAMP
27	J400 4692	AR	XJ		SCREW
28	T300 1397	2	MJ		BOLT
29	1150 0255	2	MJ		WASHER
30	3420 1918	2	MJ		NUT, Lock

MODEL CODES
16=Cherokee 2 Dr.(1981-83)
17=Cherokee 2 Dr.(1981-83)
73=Cherokee 2WD-2 Dr.(1984-86)
74=Cherokee 2WD-4 Dr.(1984-86)
18=Cherokee 4 Dr.(1981-83)
77=Cherokee 4WD-2 Dr.(1984-86)
78=Cherokee 4WD-4 Dr.(1984-86)
85=CJ-5 (1981-83)
86=CJ-6(1981)
87=CJ-7(1981-86)
88=CJ-8, Scrambler(1981-86)
64=Comanche 2WD-6 Ft. Box(1986)
66=Comanche 2WD-7 Ft. Box(1986)
63=Comanche 4WD-6 Ft. Box(1986)
65=Comanche 4WD-7 Ft. Box(1986)
15=Grand Wagoneer 4 Dr.(1984-86)
25=J-10 Truck 7 Ft. Box(1981-84)
26=J10 Truck 8 Ft. Box(1981-86)
27=J-20 Truck 8 Ft. Box(1981-86)
15=Wagoneer 4 Dr.(1981-83)
75=Wagoneer 4WD-4 Dr.(1984-86)

BODY
CJ=CJ-5, CJ-6, CJ-7, CJ-8, Scrambler(1981-86)
MJ=Comanche Pickup(1986)

STYLES
SJ=Wagoneer(1981-83), Grand Wagoneer(1984-86), Cherokee(1981-83), J-10, J-20(1981-86)
XJ=Wagoneer(1984-86), Cherokee(1984-86)

AR = Use as Required - = Non Illustrated Part P.A.R. = Paint as Required

EXHAUST SYSTEM DIESEL ENGINE, EXPORT XJ CHEROKEE, XJ WAGONEER, COMANCHE
Figure 11-500

81J11 500

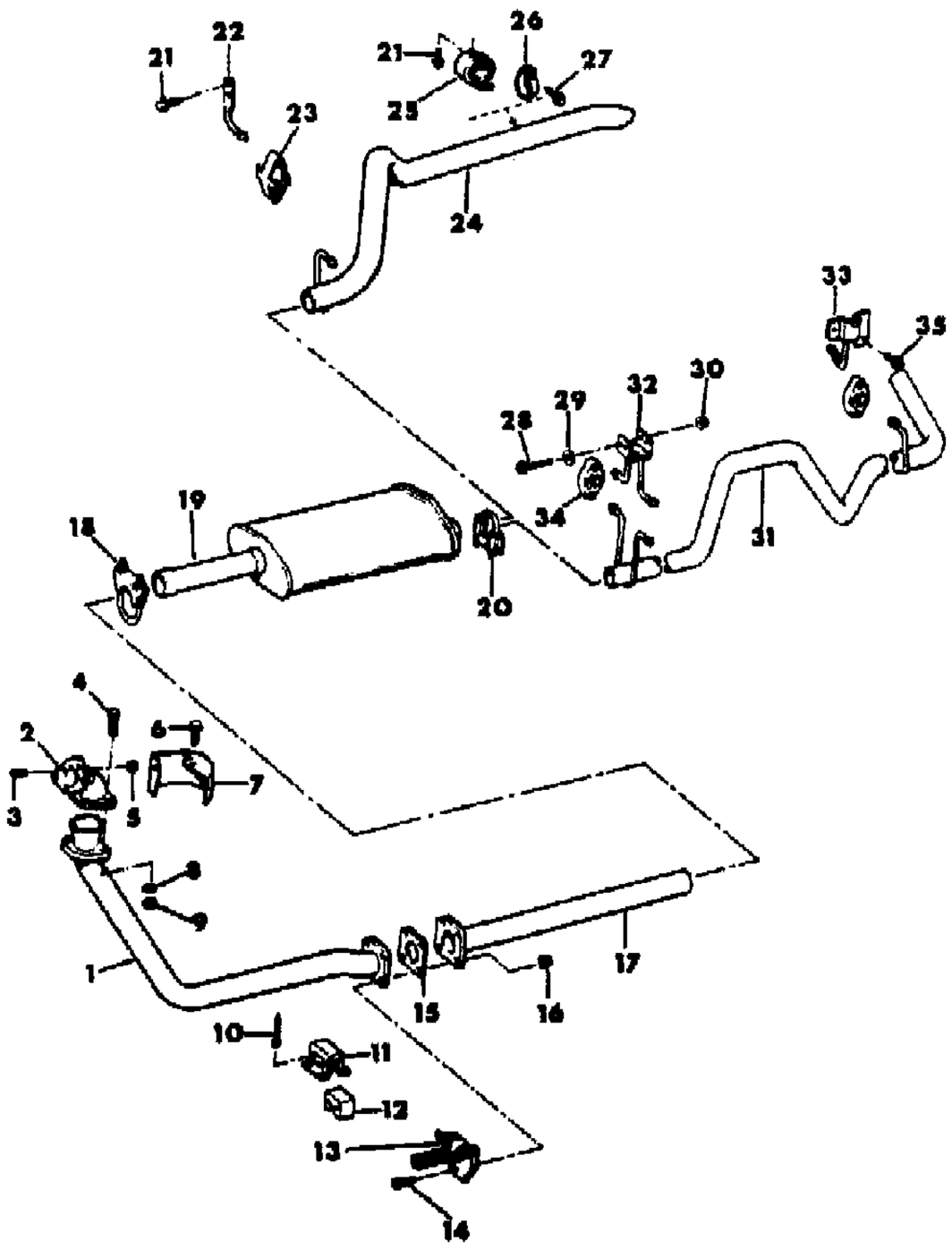

ITEM	PART NUMBER	QTY	BODY	MODEL	DESCRIPTION
31	8350 2653	1	MJ		TAILPIPE ***
32	5200 1762	1	MJ		HANGER
33	5200 2456	1	MJ		HANGER
34	5200 1759	AR			SUPPORT
35	3420 1257	2	MJ		SCREW

MODEL CODES

16=Cherokee 2 Dr.(1981-83)
17=Cherokee 2 Dr.(1981-83)
73=Cherokee 2WD-2 Dr.(1984-86)
74=Cherokee 2WD-4 Dr.(1984-86)
18=Cherokee 4 Dr.(1981-83)
77=Cherokee 4WD-2 Dr.(1984-86)
78=Cherokee 4WD-4 Dr.(1984-86)
85=CJ-5 (1981-83)
86=CJ-6(1981)
87=CJ-7(1981-86)
88=CJ-8, Scrambler(1981-86)
64=Comanche 2WD-6 Ft. Box(1986)
66=Comanche 2WD-7 Ft. Box(1986)
63=Comanche 4WD-6 Ft. Box(1986)
65=Comanche 4WD-7 Ft. Box(1986)
15=Grand Wagoneer 4 Dr.(1984-86)
25=J-10 Truck 7 Ft. Box(1981-84)
26=J10 Truck 8 Ft. Box(1981-86)
27=J-20 Truck 8 Ft. Box(1981-86)
15=Wagoneer 4 Dr.(1981-83)
75=Wagoneer 4WD-4 Dr.(1984-86)

BODY
CJ=CJ-5, CJ-6, CJ-7, CJ-8, Scrambler(1981-86)
MJ=Comanche Pickup(1986)

STYLES
SJ=Wagoneer(1981-83), Grand Wagoneer(1984-86), Cherokee(1981-83), J-10, J-20(1981-86)
XJ=Wagoneer(1984-86), Cherokee(1984-86)

AR = Use as Required - = Non Illustrated Part P.A.R. = Paint as Required

« RETURN TO GROUP INDEX

EXHAUST SYSTEM FOUR CYLINDER ENGINE XJ CHEROKEE, XJ WAGONEER, COMANCHE
Figure 11-600

81J11 600

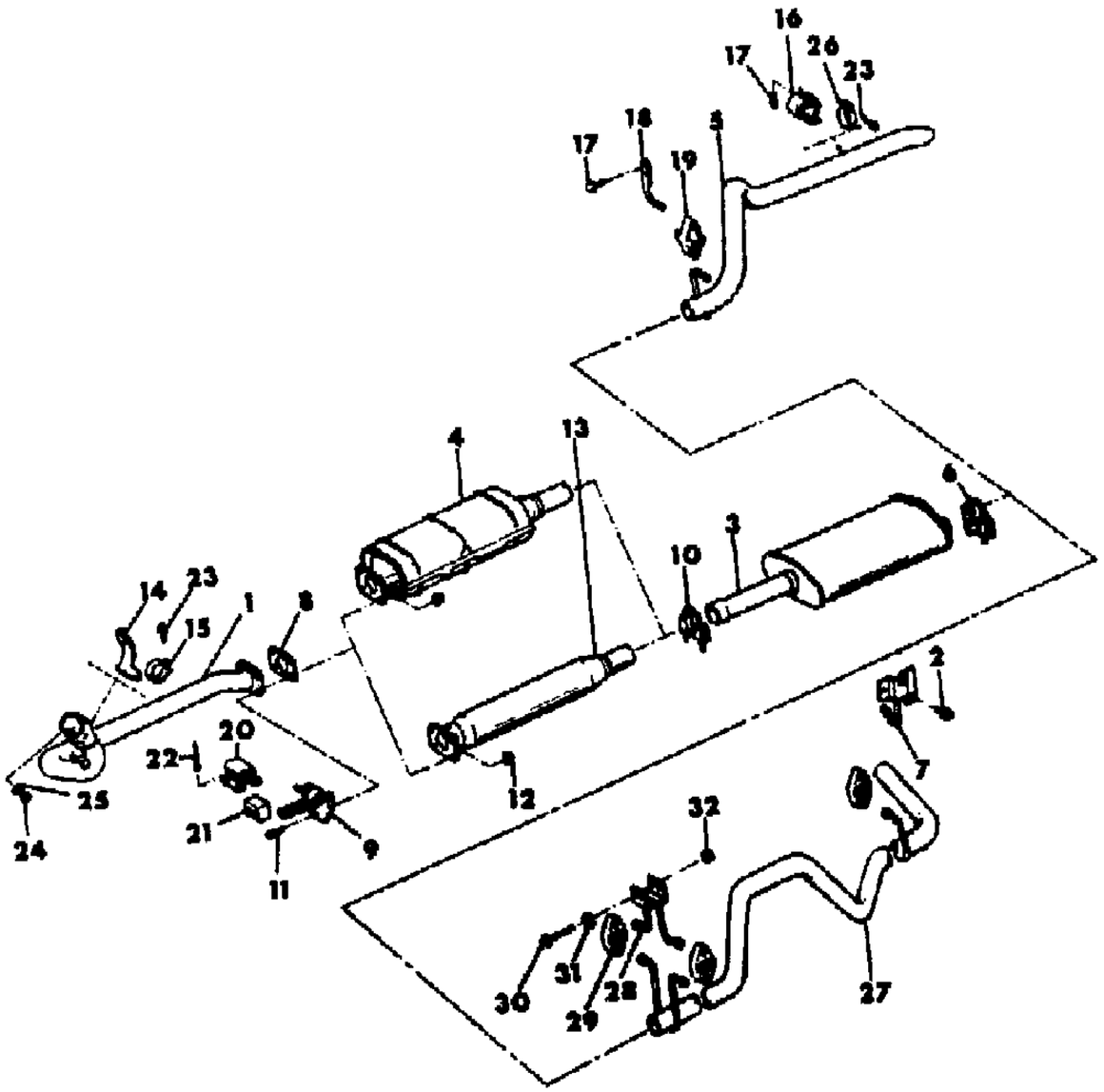

ITEM	PART NUMBER	QTY	BODY	MODEL	DESCRIPTION
1					PIPE, Exhaust, Front
	5300 0067	1			1984-85: US
	5300 1516	1			1984-85: Without US
	5300 1516	1			1986
2	3420 1257	2	MJ		SCREW
3					MUFFLER
	8350 0482	1	XJ		1984-85
	8350 2646	1	XJ		1986
	8350 2654	1	MJ		1986
4					CONVERTER, Catalytic
	5300 1627	1			1984-85: US
	5200 2634	1			1986: US
5					TAILPIPE ASSEMBLY ***
	8350 1931	1	XJ		1984-85
	8350 2645	1	XJ		1986
6					CLAMP
	5200 1860	1			1984-85
	8330 0061	1			1986
7	5200 2456	1	MJ		HANGER
8	J322 6666	1			GASKET, Catalytic Converter
9	5300 1473	1			SUPPORT
10					CLAMP
	5200 1860	1			1984-85
	5200 2144	1			1986
11	J812 5845	AR			BOLT
12	J400 4008	4			NUT
13					RESONATOR ***
	5300 1555	1			1984-85: CANADA, EXPORT
	5200 2945	1			1986: CANADA, Non-Regulated Markets
14					SUPPORT
	5300 1652	1			With Manual Transmission
	5300 1083	1			With Automatic Transmission
15	5300 1474	2			CLAMP
16					HANGER
	J536 3088	1	XJ		1984-85
	5200 2794	1	XJ		1986
17					SCREW
	J420 0402	AR			1984-85
	3420 1143	AR			1986

MODEL CODES

16=Cherokee 2 Dr.(1981-83)
17=Cherokee 2 Dr.(1981-83)
73=Cherokee 2WD-2 Dr.(1984-86)
74=Cherokee 2WD-4 Dr.(1984-86)
18=Cherokee 4 Dr.(1981-83)
77=Cherokee 4WD-2 Dr.(1984-86)
78=Cherokee 4WD-4 Dr.(1984-86)
85=CJ-5 (1981-83)
86=CJ-6(1981)
87=CJ-7(1981-86)
88=CJ-8, Scrambler(1981-86)
64=Comanche 2WD-6 Ft. Box(1986)
66=Comanche 2WD-7 Ft. Box(1986)
63=Comanche 4WD-6 Ft. Box(1986)
65=Comanche 4WD-7 Ft. Box(1986)
15=Grand Wagoneer 4 Dr.(1984-86)
25=J-10 Truck 7 Ft. Box(1981-84)
26=J10 Truck 8 Ft. Box(1981-86)
27=J-20 Truck 8 Ft. Box(1981-86)
15=Wagoneer 4 Dr.(1981-83)
75=Wagoneer 4WD-4 Dr.(1984-86)

BODY
CJ=CJ-5, CJ-6, CJ-7, CJ-8, Scrambler(1981-86)
MJ=Comanche Pickup(1986)

STYLES
SJ=Wagoneer(1981-83), Grand Wagoneer(1984-86), Cherokee(1981-83), J-10, J-20(1981-86)
XJ=Wagoneer(1984-86), Cherokee(1984-86)

AR = Use as Required - = Non Illustrated Part P.A.R. = Paint as Required

EXHAUST SYSTEM FOUR CYLINDER ENGINE XJ CHEROKEE, XJ WAGONEER, COMANCHE
Figure 11-600

81J11 600

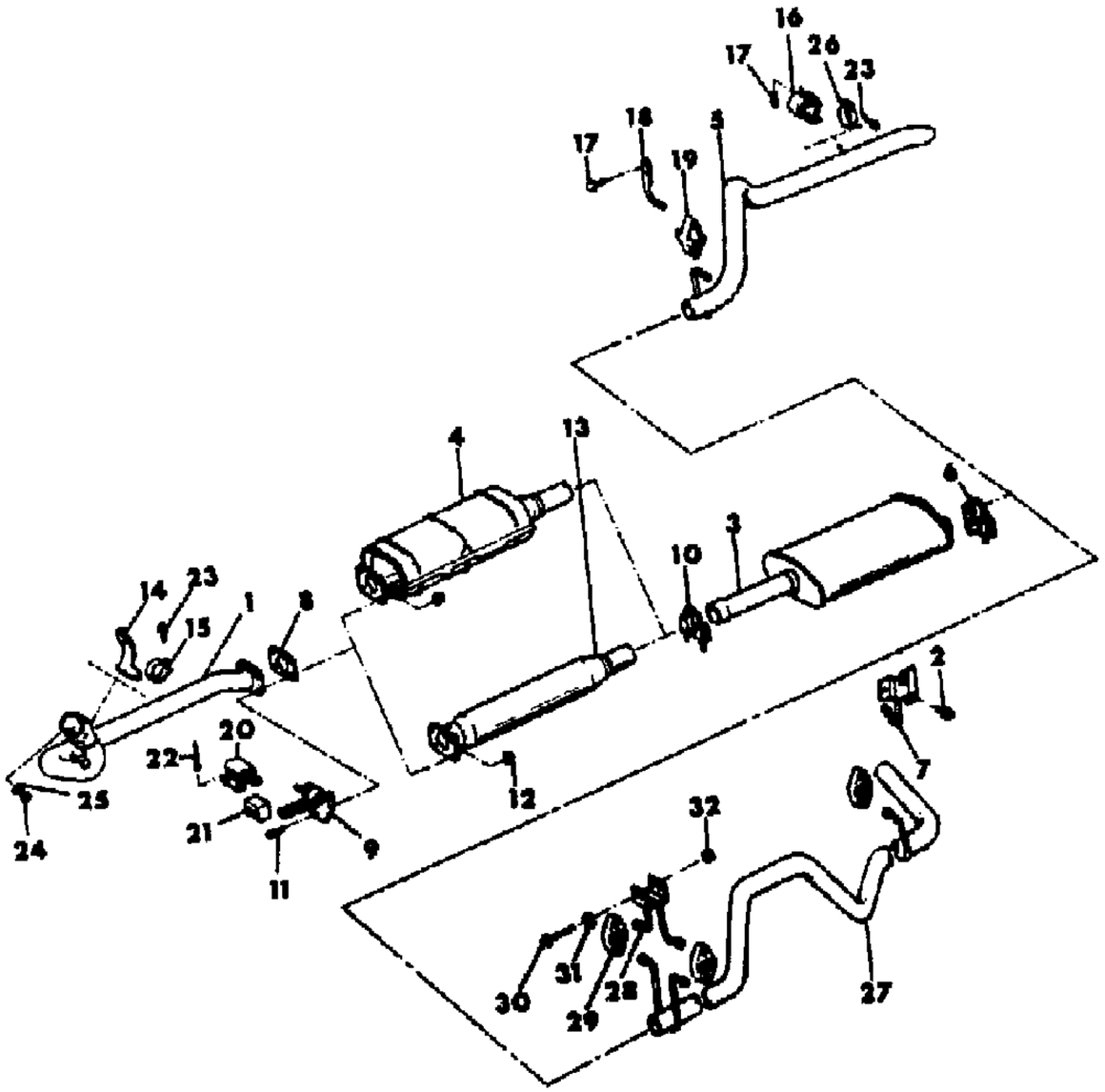

ITEM	PART NUMBER	QTY	BODY	MODEL	DESCRIPTION
18	5300 1085	1	XJ		HANGER
19	5300 1377	1	XJ		SUPPORT
20	5300 0104	1			BRACKET
21	5300 0101	1			INSULATOR
22	J400 6543	4			RIVET
23	J400 4692	AR			SCREW
24	J400 6567	2			NUT
25	J400 1104	2			WASHER
26	5200 2722	1	XJ		CLAMP
27	8350 2655	1	MJ		TAILPIPE ASSEMBLY ***
28	5200 1762	1	MJ		HANGER
29	5200 1759	3	MJ		SUPPORT
30	T300 1397	2	MJ		BOLT
31	1150 0255	2	MJ		WASHER
32	3420 1918	2	MJ		NUT, Lock

MODEL CODES

16=Cherokee 2 Dr.(1981-83)
17=Cherokee 2 Dr.(1981-83)
73=Cherokee 2WD-2 Dr.(1984-86)
74=Cherokee 2WD-4 Dr.(1984-86)
18=Cherokee 4 Dr.(1981-83)
77=Cherokee 4WD-2 Dr.(1984-86)
78=Cherokee 4WD-4 Dr.(1984-86)
85=CJ-5 (1981-83)
86=CJ-6(1981)
87=CJ-7(1981-86)
88=CJ-8, Scrambler(1981-86)
64=Comanche 2WD-6 Ft. Box(1986)
66=Comanche 2WD-7 Ft. Box(1986)
63=Comanche 4WD-6 Ft. Box(1986)
65=Comanche 4WD-7 Ft. Box(1986)
15=Grand Wagoneer 4 Dr.(1984-86)
25=J-10 Truck 7 Ft. Box(1981-84)
26=J10 Truck 8 Ft. Box(1981-86)
27=J-20 Truck 8 Ft. Box(1981-86)
15=Wagoneer 4 Dr.(1981-83)
75=Wagoneer 4WD-4 Dr.(1984-86)

BODY
CJ=CJ-5, CJ-6, CJ-7, CJ-8, Scrambler(1981-86)
MJ=Comanche Pickup(1986)

STYLES
SJ=Wagoneer(1981-83), Grand Wagoneer(1984-86), Cherokee(1981-83), J-10, J-20(1981-86)
XJ=Wagoneer(1984-86), Cherokee(1984-86)

AR = Use as Required - = Non Illustrated Part P.A.R. = Paint as Required

« RETURN TO GROUP INDEX

EXHAUST SYSTEM SIX CYLINDER ENGINE XJ CHEROKEE, XJ WAGONEER, COMANCHE
Figure 11-700

81J11 700

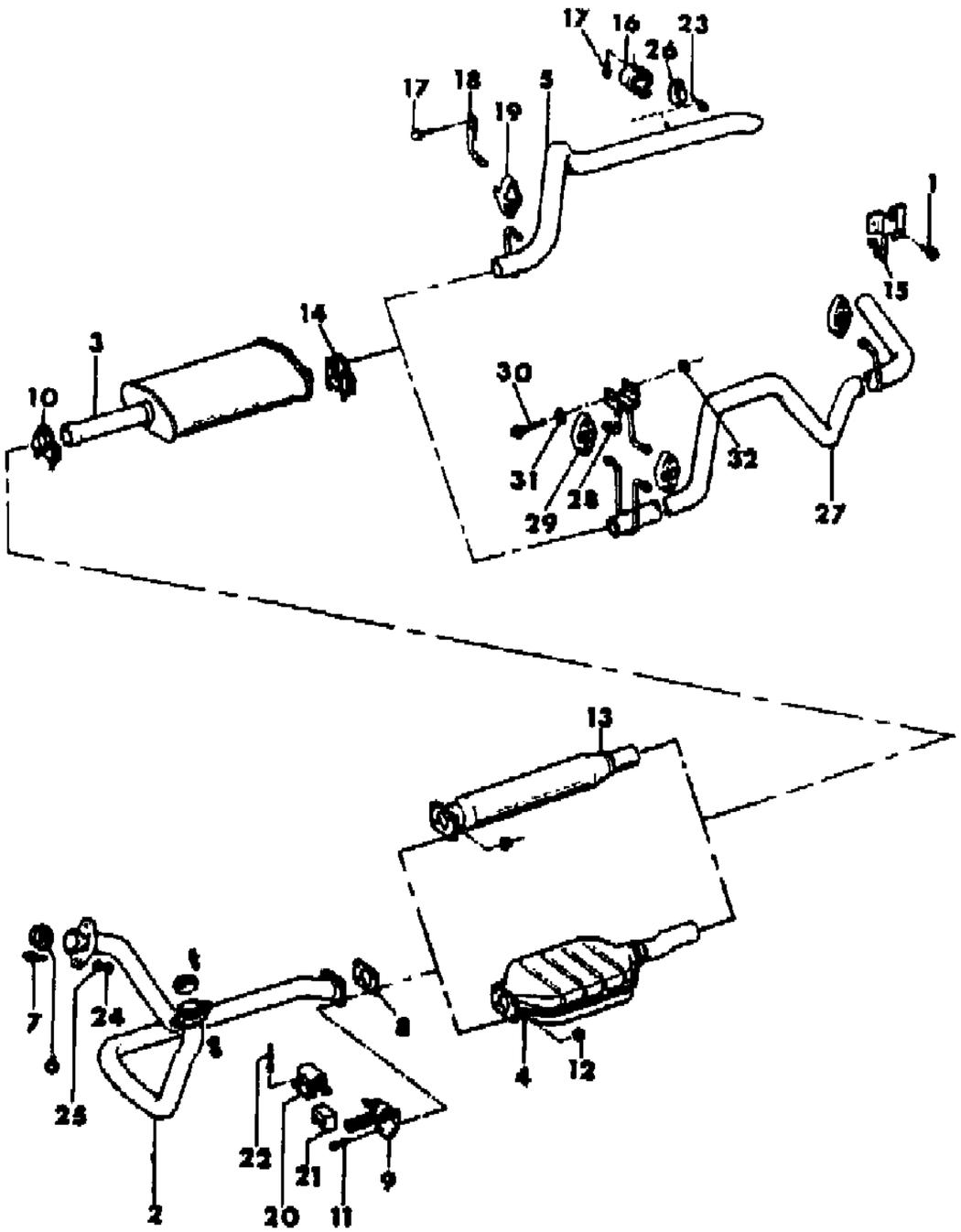

ITEM	PART NUMBER	QTY	BODY	MODEL	DESCRIPTION
1	3420 1257	2	MJ		SCREW
2					PIPE, Exhaust, Front
	5300 1388	1			Without US-California
	5300 1392	1			With US-California
3					MUFFLER
	8350 0483	1	XJ		1984-85
	8350 2648	1	XJ		1986
	8350 2654	1	MJ		1986
4					CONVERTER, Catalytic
	5300 1801	1			US-49 States, High Altitude Operation
	5300 1268	1			US-California
5					TAILPIPE ASSEMBLY ***
	8350 1931	1	XJ		1984-85
	8350 2647	1	XJ		1986
6	5300 0692	2			SEAL
7	5300 0709	4			STUD
8	J322 6666	1			GASKET, Catalytic Converter
9	5300 1473	1			SUPPORT
10	5200 1860	1			CLAMP
11	J812 5845	AR			BOLT
12	J400 4008	4			NUT
13					RESONATOR ***
	5300 1555	1			1984-85: CANADA, EXPORT
	5300 1555	1			1986: CANADA, Non-Regulated Markets
14					CLAMP
	5200 1860	1			1984-85
	8330 0060	1			1986
15	5200 2456	1	MJ		HANGER
16					HANGER
	J536 3088	1	XJ		1984-85
	5200 2794	1	XJ		1986
17					SCREW
	J420 0402	AR			1984-85
	3420 1193	AR			1986
18	5300 1085	1			HANGER
19	5300 1377	1			SUPPORT
20	5300 0104	1			BRACKET
21	5300 0101	1			INSULATOR
22	J400 6543	4			RIVET

MODEL CODES

16=Cherokee 2 Dr.(1981-83)
17=Cherokee 2 Dr.(1981-83)
73=Cherokee 2WD-2 Dr.(1984-86)
74=Cherokee 2WD-4 Dr.(1984-86)
18=Cherokee 4 Dr.(1981-83)
77=Cherokee 4WD-2 Dr.(1984-86)
78=Cherokee 4WD-4 Dr.(1984-86)
85=CJ-5 (1981-83)
86=CJ-6(1981)
87=CJ-7(1981-86)
88=CJ-8, Scrambler(1981-86)
64=Comanche 2WD-6 Ft. Box(1986)
66=Comanche 2WD-7 Ft. Box(1986)
63=Comanche 4WD-6 Ft. Box(1986)
65=Comanche 4WD-7 Ft. Box(1986)
15=Grand Wagoneer 4 Dr.(1984-86)
25=J-10 Truck 7 Ft. Box(1981-84)
26=J10 Truck 8 Ft. Box(1981-86)
27=J-20 Truck 8 Ft. Box(1981-86)
15=Wagoneer 4 Dr.(1981-83)
75=Wagoneer 4WD-4 Dr.(1984-86)

BODY
CJ=CJ-5, CJ-6, CJ-7, CJ-8, Scrambler(1981-86)
MJ=Comanche Pickup(1986)

STYLES
SJ=Wagoneer(1981-83), Grand Wagoneer(1984-86), Cherokee(1981-83), J-10, J-20(1981-86)
XJ=Wagoneer(1984-86), Cherokee(1984-86)

AR = Use as Required - = Non Illustrated Part P.A.R. = Paint as Required

EXHAUST SYSTEM SIX CYLINDER ENGINE XJ CHEROKEE, XJ WAGONEER, COMANCHE
Figure 11-700

81J11 700

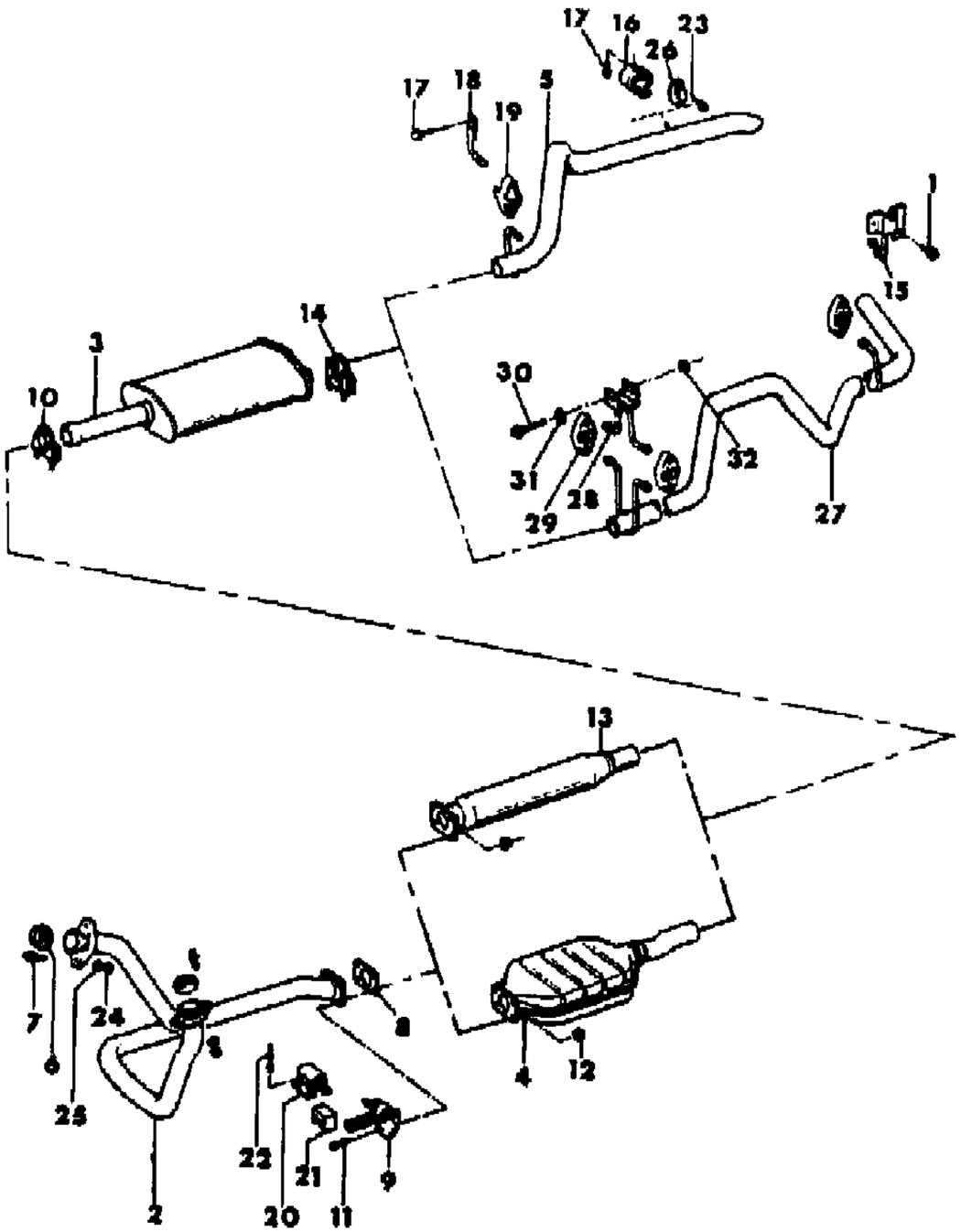

ITEM	PART NUMBER	QTY	BODY	MODEL	DESCRIPTION
23	J400 4692	AR			SCREW
24	J400 6567	4			NUT
25	J400 1104	4			WASHER
26	5300 1474	1	XJ		CLAMP
27	8350 2653	1	MJ		TAILPIPE ASSEMBLY ***
28	5200 1762	1	MJ		HANGER
29	5200 1759	3	MJ		SUPPORT
30	T300 1397	2	MJ		BOLT
31	1150 0255	2	MJ		WASHER
32	3420 1918	2	MJ		NUT, Lock

MODEL CODES

16=Cherokee 2 Dr.(1981-83)
17=Cherokee 2 Dr.(1981-83)
73=Cherokee 2WD-2 Dr.(1984-86)
74=Cherokee 2WD-4 Dr.(1984-86)
18=Cherokee 4 Dr.(1981-83)
77=Cherokee 4WD-2 Dr.(1984-86)
78=Cherokee 4WD-4 Dr.(1984-86)
85=CJ-5 (1981-83)
86=CJ-6(1981)
87=CJ-7(1981-86)
88=CJ-8, Scrambler(1981-86)
64=Comanche 2WD-6 Ft. Box(1986)
66=Comanche 2WD-7 Ft. Box(1986)
63=Comanche 4WD-6 Ft. Box(1986)
65=Comanche 4WD-7 Ft. Box(1986)
15=Grand Wagoneer 4 Dr.(1984-86)
25=J-10 Truck 7 Ft. Box(1981-84)
26=J10 Truck 8 Ft. Box(1981-86)
27=J-20 Truck 8 Ft. Box(1981-86)
15=Wagoneer 4 Dr.(1981-83)
75=Wagoneer 4WD-4 Dr.(1984-86)

BODY
CJ=CJ-5, CJ-6, CJ-7, CJ-8, Scrambler(1981-86)
MJ=Comanche Pickup(1986)

STYLES
SJ=Wagoneer(1981-83), Grand Wagoneer(1984-86), Cherokee(1981-83), J-10, J-20(1981-86)
XJ=Wagoneer(1984-86), Cherokee(1984-86)

AR = Use as Required - = Non Illustrated Part P.A.R. = Paint as Required

« RETURN TO GROUP INDEX

EXHAUST SYSTEM, US SIX AND EIGHT CYLINDER ENGINES SJ CHEROKEE, SJ WAGONEER
Figure 11-800

81J11 800

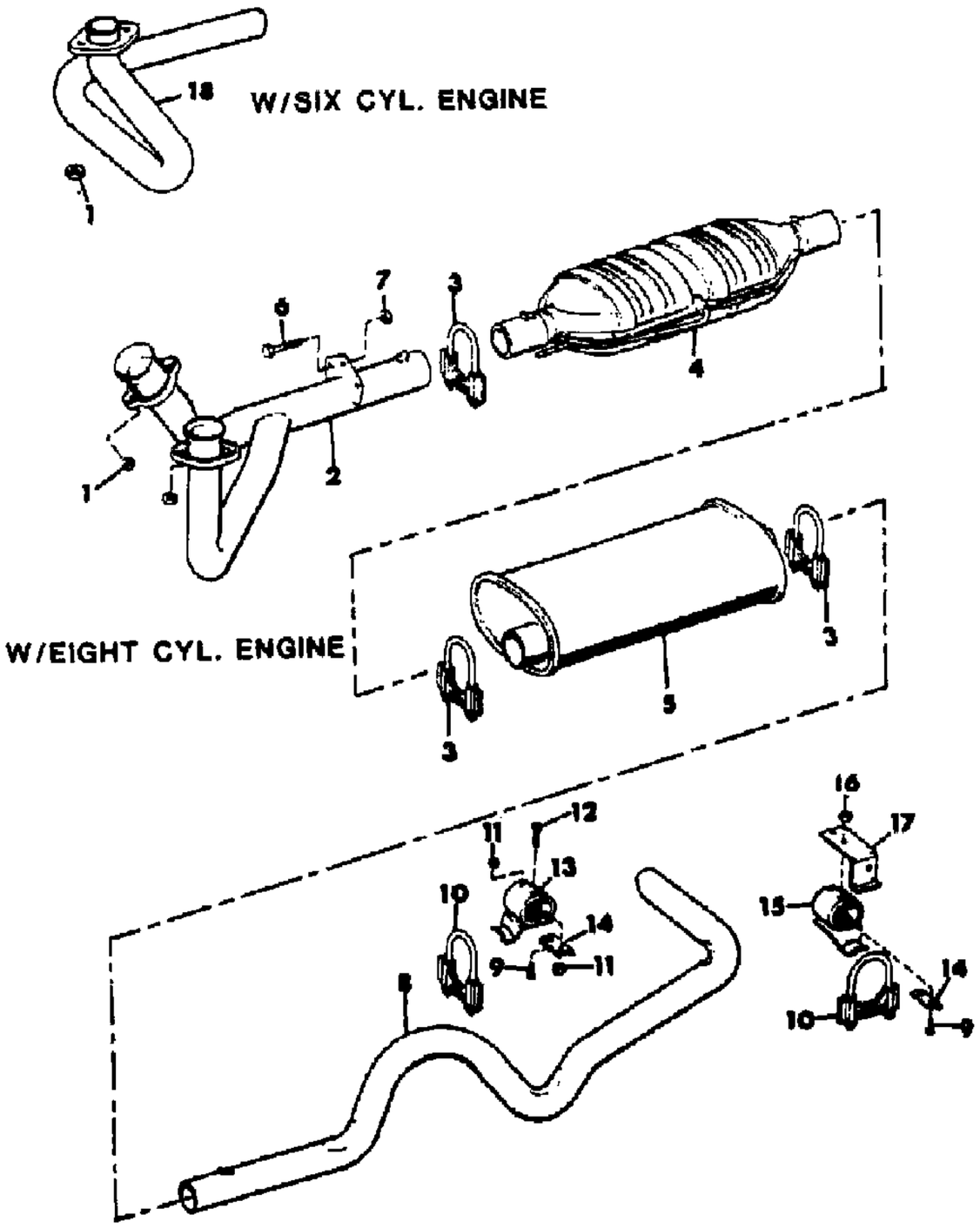

ITEM	PART NUMBER	QTY	BODY	MODEL	DESCRIPTION
1	J400 6567	2			NUT
2					PIPE, Exhaust, Front
	J536 2534	1			1981-86: US-49 States, with Four Speed Transmission
	J536 2536	1			1981-82: US-49 States, with Automatic Transmission
	J536 2536	1			1983-86: With Automatic Transmission
3					CLAMP
	J323 0831	1			Six Cylinder
	J535 8827	1			Eight Cylinder
4					CONVERTER, Catalytic
					Six Cylinder
	J537 0049	1			1981: US-49 States
	J537 0050	1			1981: US-California
	J537 0117	1			1982
	J537 0123	1			1983-86
					Eight Cylinder
	J537 0051	1			1981-83
	J537 0145	1			1984-86
5					MUFFLER
					Six Cylinder
	J536 2494	1			1981: US-49 States
	J536 2284	1			1981: US-California
	J536 2284	1			1982-86
					Eight Cylinder
	J536 2540	1			1981-86
6	J018 0132	1			BOLT
7	J400 5142	1			NUT, Lock
8					TAILPIPE ***
					Six Cylinder
	J536 1873	1			1981: US-49 States
	J536 2160	1			1981: US-California
	J536 3115	1			1982-86
					Eight Cylinder
	J536 0080	1			1981-83
	J536 4858	1			1984-86
9	J018 0081	3			BOLT
10	8330 0062	2			CLAMP
11	J941 3447	2			NUT
12	J098 1537	1			SCREW
13	J536 3088	1			HANGER

MODEL CODES

16=Cherokee 2 Dr.(1981-83)	78=Cherokee 4WD-4 Dr.(1984-86)	64=Comanche 2WD-6 Ft. Box(1986)	25=J-10 Truck 7 Ft. Box(1981-84)
17=Cherokee 2 Dr.(1981-83)	85=CJ-5 (1981-83)	66=Comanche 2WD-7 Ft. Box(1986)	26=J10 Truck 8 Ft. Box(1981-86)
73=Cherokee 2WD-2 Dr.(1984-86)	86=CJ-6(1981)	63=Comanche 4WD-6 Ft. Box(1986)	27=J-20 Truck 8 Ft. Box(1981-86)
74=Cherokee 2WD-4 Dr.(1984-86)	87=CJ-7(1981-86)	65=Comanche 4WD-7 Ft. Box(1986)	15=Wagoneer 4 Dr.(1981-83)
18=Cherokee 4 Dr.(1981-83)	88=CJ-8, Scrambler(1981-86)	15=Grand Wagoneer 4 Dr.(1984-86)	75=Wagoneer 4WD-4 Dr.(1984-86)
77=Cherokee 4WD-2 Dr.(1984-86)			

BODY
CJ=CJ-5, CJ-6, CJ-7, CJ-8, Scrambler(1981-86)
MJ=Comanche Pickup(1986)

STYLES
SJ=Wagoneer(1981-83), Grand Wagoneer(1984-86), Cherokee(1981-83), J-10, J-20(1981-86)
XJ=Wagoneer(1984-86), Cherokee(1984-86)

AR = Use as Required - = Non Illustrated Part P.A.R. = Paint as Required

EXHAUST SYSTEM, US SIX AND EIGHT CYLINDER ENGINES SJ CHEROKEE, SJ WAGONEER
Figure 11-800

81J11 800

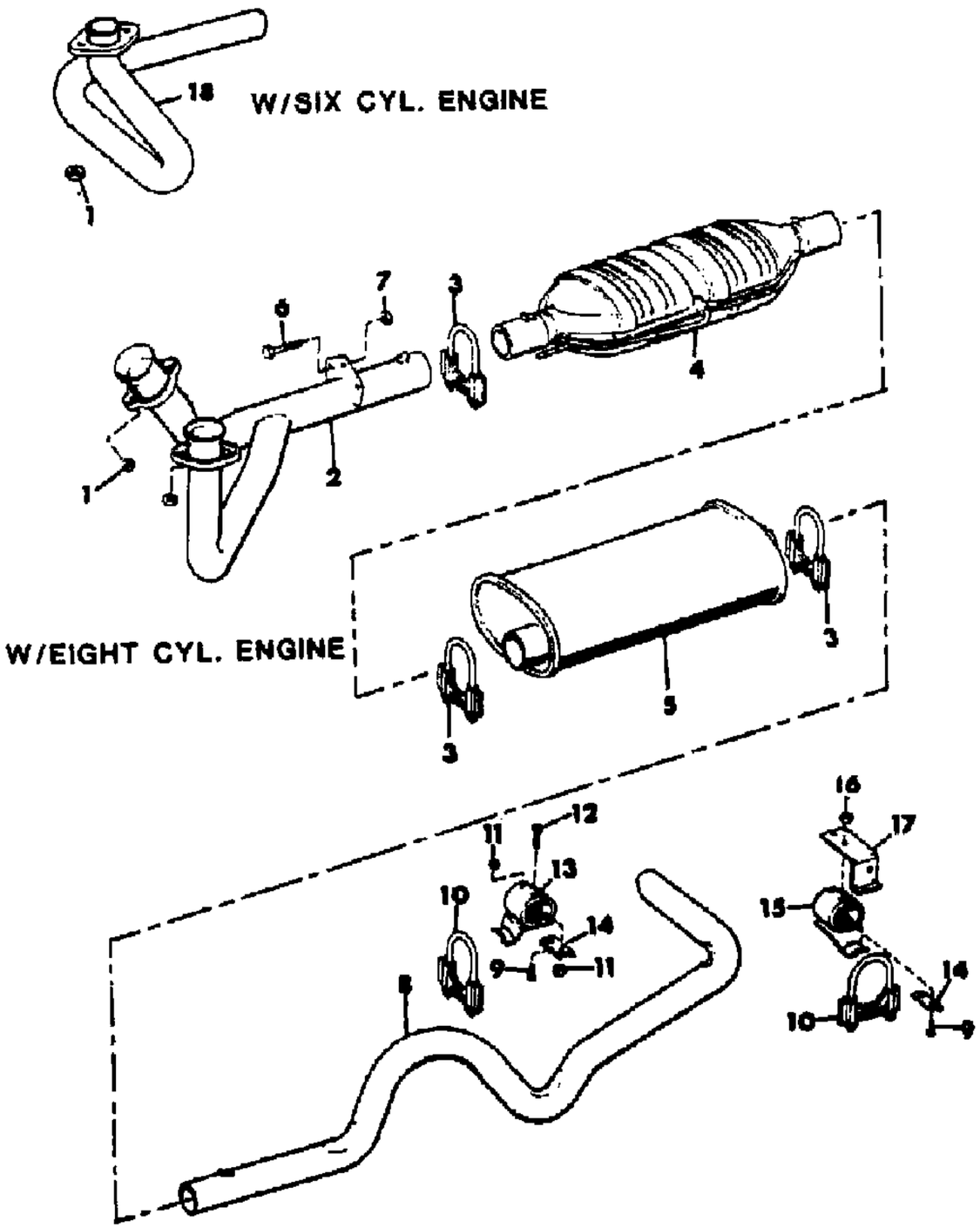

ITEM	PART NUMBER	QTY	BODY	MODEL	DESCRIPTION
14	J535 8078	2			PLATE
15	J536 3087	1			HANGER
16	J027 1184	2			NUT
17	J535 7044	1			BRACKET
18					PIPE, Exhaust, Front
	J536 2470	1			1981: US-49 States, with Four Speed Transmission
	J536 2167	1			1981: US-California, with Four Speed Transmission
	J536 2471	1			1981: US-49 States, with Automatic Transmission
	J536 2168	1			1981: US-California, with Automatic Transmission
	J536 2167	1			1982: With Four Speed Transmission
	J536 3151	1			1982: With Five Speed Transmission
	J536 2168	1			1982: With Automatic Transmission
	J536 4317	1			1983-86

MODEL CODES

16=Cherokee 2 Dr.(1981-83)
17=Cherokee 2 Dr.(1981-83)
73=Cherokee 2WD-2 Dr.(1984-86)
74=Cherokee 2WD-4 Dr.(1984-86)
18=Cherokee 4 Dr.(1981-83)
77=Cherokee 4WD-2 Dr.(1984-86)
78=Cherokee 4WD-4 Dr.(1984-86)
85=CJ-5 (1981-83)
86=CJ-6(1981)
87=CJ-7(1981-86)
88=CJ-8, Scrambler(1981-86)
64=Comanche 2WD-6 Ft. Box(1986)
66=Comanche 2WD-7 Ft. Box(1986)
63=Comanche 4WD-6 Ft. Box(1986)
65=Comanche 4WD-7 Ft. Box(1986)
15=Grand Wagoneer 4 Dr.(1984-86)
25=J-10 Truck 7 Ft. Box(1981-84)
26=J10 Truck 8 Ft. Box(1981-86)
27=J-20 Truck 8 Ft. Box(1981-86)
15=Wagoneer 4 Dr.(1981-83)
75=Wagoneer 4WD-4 Dr.(1984-86)

BODY
CJ=CJ-5, CJ-6, CJ-7, CJ-8, Scrambler(1981-86)
MJ=Comanche Pickup(1986)

STYLES
SJ=Wagoneer(1981-83), Grand Wagoneer(1984-86), Cherokee(1981-83), J-10, J-20(1981-86)
XJ=Wagoneer(1984-86), Cherokee(1984-86)

AR = Use as Required - = Non Illustrated Part P.A.R. = Paint as Required

« RETURN TO GROUP INDEX

EXHAUST SYSTEM, CANADA, NON-REGULATED MARKETS SIX AND EIGHT CYLINDER ENGINES SJ CHEROKEE, SJ WAGONEER
Figure 11-900

81J11 900

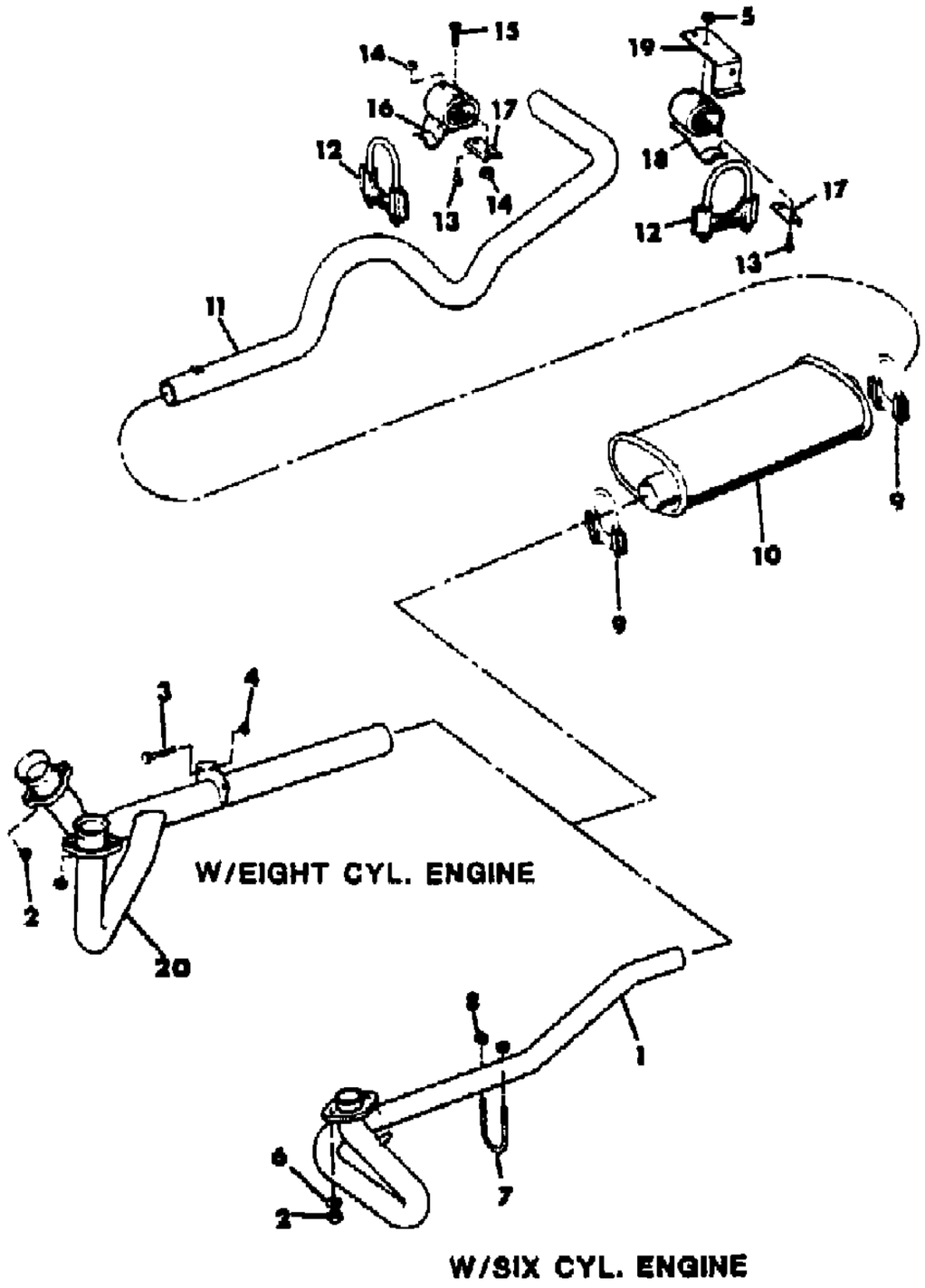

ITEM	PART NUMBER	QTY	BODY	MODEL	DESCRIPTION
1					PIPE, Exhaust, Front
	J536 1754	1			1981-82: CANADA, with Four Speed Transmission
	J536 1754	1			1981-83: EXPORT, with Four Speed Transmission
	J536 1755	1			1981-82: CANADA, with Automatic Transmission
	J536 1755	1			1981-83: EXPORT, with Automatic Transmission
	J536 3183	1			1982: CANADA, with Five Speed Transmission
	J536 3183	1			1982-84: EXPORT, with Five Speed Transmission
	J536 4500	1			1983-86: CANADA
	J536 4500	1			1984-86: EXPORT
2					NUT
	J400 6567	2			Six Cylinder
	J400 3869	4			Eight Cylinder
3	J018 0132	1			BOLT
4	J400 5142	1			NUT
5	J027 1184	2			NUT
6	J400 1181	2			WASHER
7	J094 1013	1			U-BOLT
8	J012 0376	2			NUT
9					CLAMP
	8330 0060	1			Six Cylinder
	J535 8827	2			Eight Cylinder
10					MUFFLER
	J536 1747	1			Six Cylinder
	J536 2540	1			Eight Cylinder
11					TAILPIPE ***
	J536 1873	1			Six Cylinder
					Eight Cylinder
	J536 0080	1			1981-84
	J536 3113	1			1985-86
12	8330 0062	2			CLAMP
13	J018 0081	3			BOLT
14	J941 3447	2			NUT
15	J098 1537	1			SCREW
16	J536 3088	1			HANGER
17	J535 8978	2			PLATE
18	J536 3087	1			HANGER
19	J535 7044	1			BRACKET
20					PIPE, Exhaust, Front
	J536 2808	1			CANADA, EXPORT, with Four Speed Transmission

MODEL CODES

16=Cherokee 2 Dr.(1981-83)	78=Cherokee 4WD-4 Dr.(1984-86)	64=Comanche 2WD-6 Ft. Box(1986)	25=J-10 Truck 7 Ft. Box(1981-84)
17=Cherokee 2 Dr.(1981-83)	85=CJ-5 (1981-83)	66=Comanche 2WD-7 Ft. Box(1986)	26=J10 Truck 8 Ft. Box(1981-86)
73=Cherokee 2WD-2 Dr.(1984-86)	86=CJ-6(1981)	63=Comanche 4WD-6 Ft. Box(1986)	27=J-20 Truck 8 Ft. Box(1981-86)
74=Cherokee 2WD-4 Dr.(1984-86)	87=CJ-7(1981-86)	65=Comanche 4WD-7 Ft. Box(1986)	15=Wagoneer 4 Dr.(1981-83)
18=Cherokee 4 Dr.(1981-83)	88=CJ-8, Scrambler(1981-86)	15=Grand Wagoneer 4 Dr.(1984-86)	75=Wagoneer 4WD-4 Dr.(1984-86)
77=Cherokee 4WD-2 Dr.(1984-86)			

BODY
CJ=CJ-5, CJ-6, CJ-7, CJ-8, Scrambler(1981-86)
MJ=Comanche Pickup(1986)

STYLES
SJ=Wagoneer(1981-83), Grand Wagoneer(1984-86), Cherokee(1981-83), J-10, J-20(1981-86)
XJ=Wagoneer(1984-86), Cherokee(1984-86)

AR = Use as Required - = Non Illustrated Part P.A.R. = Paint as Required

EXHAUST SYSTEM, CANADA, NON-REGULATED MARKETS SIX AND EIGHT CYLINDER ENGINES SJ CHEROKEE, SJ WAGONEER
Figure 11-900

81J11 900

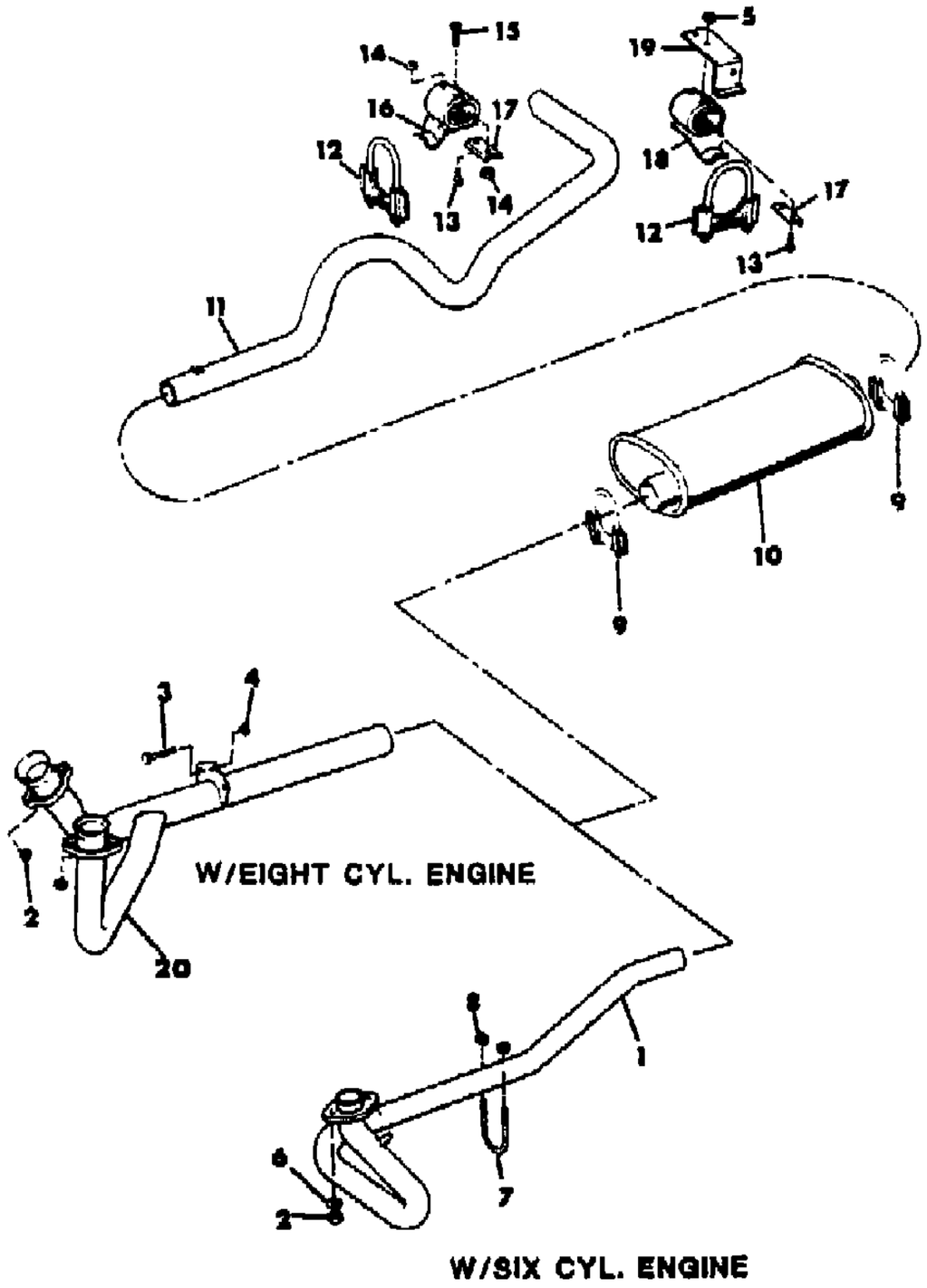

ITEM	PART NUMBER	QTY	BODY	MODEL	DESCRIPTION
	J536 2809	1			CANADA, EXPORT, with Automatic Transmission

MODEL CODES

16=Cherokee 2 Dr.(1981-83)	78=Cherokee 4WD-4 Dr.(1984-86)	64=Comanche 2WD-6 Ft. Box(1986)	25=J-10 Truck 7 Ft. Box(1981-84)
17=Cherokee 2 Dr.(1981-83)	85=CJ-5 (1981-83)	66=Comanche 2WD-7 Ft. Box(1986)	26=J10 Truck 8 Ft. Box(1981-86)
73=Cherokee 2WD-2 Dr.(1984-86)	86=CJ-6(1981)	63=Comanche 4WD-6 Ft. Box(1986)	27=J-20 Truck 8 Ft. Box(1981-86)
74=Cherokee 2WD-4 Dr.(1984-86)	87=CJ-7(1981-86)	65=Comanche 4WD-7 Ft. Box(1986)	15=Wagoneer 4 Dr.(1981-83)
18=Cherokee 4 Dr.(1981-83)	88=CJ-8, Scrambler(1981-86)	15=Grand Wagoneer 4 Dr.(1984-86)	75=Wagoneer 4WD-4 Dr.(1984-86)
77=Cherokee 4WD-2 Dr.(1984-86)			

BODY
CJ=CJ-5, CJ-6, CJ-7, CJ-8, Scrambler(1981-86)
MJ=Comanche Pickup(1986)

STYLES
SJ=Wagoneer(1981-83), Grand Wagoneer(1984-86), Cherokee(1981-83), J-10, J-20(1981-86)
XJ=Wagoneer(1984-86), Cherokee(1984-86)

AR = Use as Required - = Non Illustrated Part P.A.R. = Paint as Required

EXHAUST SYSTEM, US SIX AND EIGHT CYLINDER ENGINES J10, J20
Figure 11-1000

81J11 1000

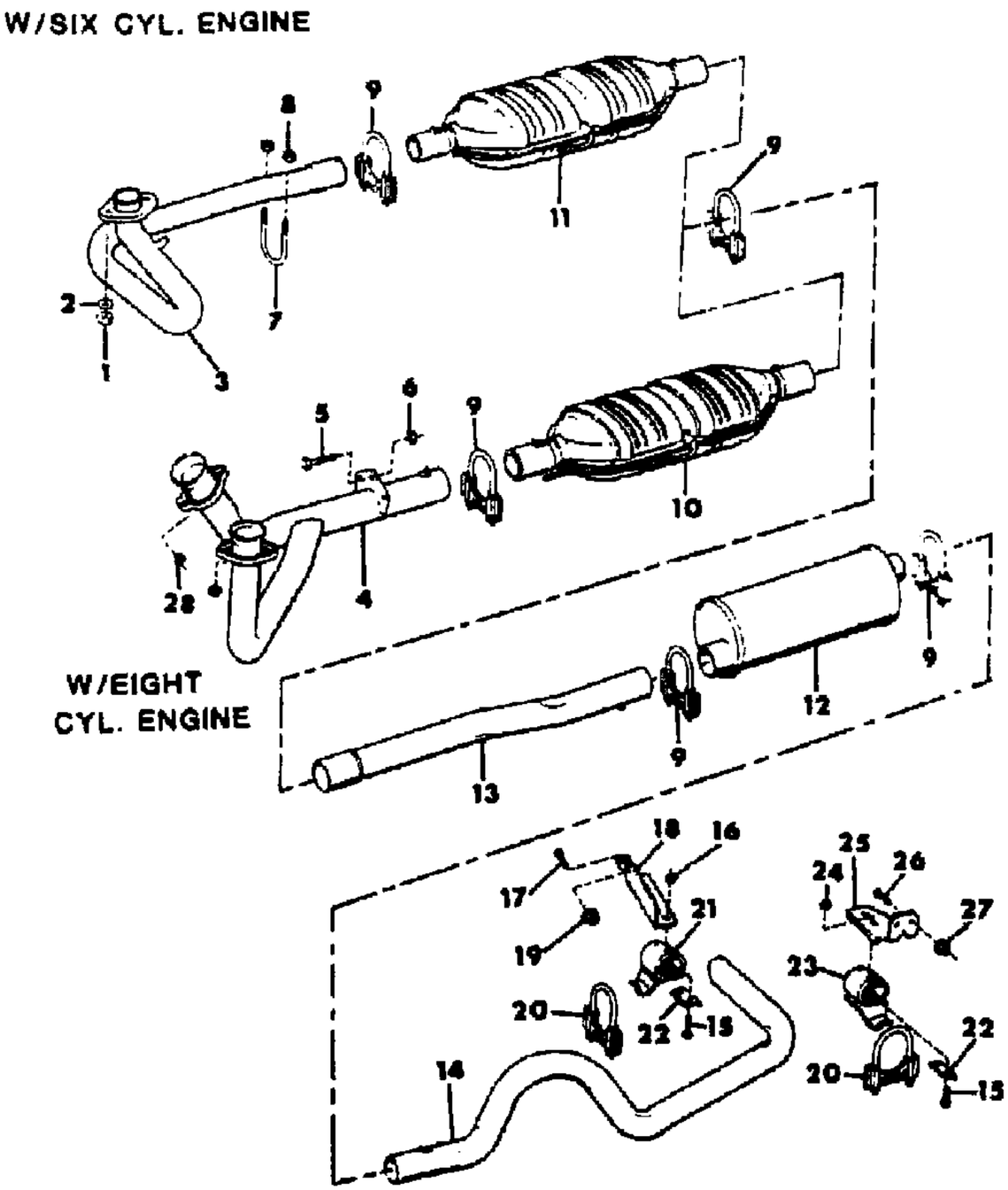

ITEM	PART NUMBER	QTY	BODY	MODEL	DESCRIPTION
1	J400 6567	2			NUT
2	J400 1181	2			WASHER
3					PIPE, Exhaust, Front
	J536 2470	1			1981: US-49 States, with Four Speed Transmission
	J536 2167	1			1981: US-California, with Four Speed Transmission
	J536 2471	1			1981: US-49 States, with Automatic Transmission
	J536 2168	1			1981: US-California, with Automatic Transmission
	J536 2167	1			1982: With Four Speed Transmission
	J536 3151	1			1982: With Five Speed Transmission
	J536 2168	1			1982: With Automatic Transmission
	J536 4317	1			1983-86
4					PIPE, Exhaust, Front
	J536 2534	1		25,26	1981-86: US-49 States, with Four Speed Transmission
	J536 2535	1		27	1981-86: US-49 States, with Four Speed Transmission
	J536 2536	1			1081-82: US-49 States, with Automatic Transmission
	J536 2536	1			1983-86: with Automatic Transmission
5	J018 0132	1			BOLT
6	J400 5142	1			NUT
7	J094 1013	1			U-BOLT
8	J012 0376	2			NUT
9					CLAMP
	8330 0060	4			Six Cylinder
	J535 8827	4			Eight Cylinder
10					CONVERTER, Catalytic
					Eight Cylinder
	J537 0051	1			1981-83
	J537 0145	1			1984-86
11					CONVERTER, Catalytic
					Six Cylinder
	J537 0049	1			1981: US-49 States
	J537 0050	1			1981: US-California
	J537 0117	1			1982
	J537 0123	1			1983-86
12					MUFFLER
					Six Cylinder
	J536 1820	1		25,26	1981: US-49 States
	J536 2489	1		25,26	1981: US-California
	J536 2489	1		25,26	1982-86
					Eight Cylinder

MODEL CODES

16=Cherokee 2 Dr.(1981-83)
17=Cherokee 2 Dr.(1981-83)
73=Cherokee 2WD-2 Dr.(1984-86)
74=Cherokee 2WD-4 Dr.(1984-86)
18=Cherokee 4 Dr.(1981-83)
77=Cherokee 4WD-2 Dr.(1984-86)
78=Cherokee 4WD-4 Dr.(1984-86)
85=CJ-5 (1981-83)
86=CJ-6(1981)
87=CJ-7(1981-86)
88=CJ-8, Scrambler(1981-86)
64=Comanche 2WD-6 Ft. Box(1986)
66=Comanche 2WD-7 Ft. Box(1986)
63=Comanche 4WD-6 Ft. Box(1986)
65=Comanche 4WD-7 Ft. Box(1986)
15=Grand Wagoneer 4 Dr.(1984-86)
25=J-10 Truck 7 Ft. Box(1981-84)
26=J10 Truck 8 Ft. Box(1981-86)
27=J-20 Truck 8 Ft. Box(1981-86)
15=Wagoneer 4 Dr.(1981-83)
75=Wagoneer 4WD-4 Dr.(1984-86)

BODY
CJ=CJ-5, CJ-6, CJ-7, CJ-8, Scrambler(1981-86)
MJ=Comanche Pickup(1986)

STYLES
SJ=Wagoneer(1981-83), Grand Wagoneer(1984-86), Cherokee(1981-83), J-10, J-20(1981-86)
XJ=Wagoneer(1984-86), Cherokee(1984-86)

AR = Use as Required - = Non Illustrated Part P.A.R. = Paint as Required

EXHAUST SYSTEM, US SIX AND EIGHT CYLINDER ENGINES J10, J20
Figure 11-1000

81J11 1000

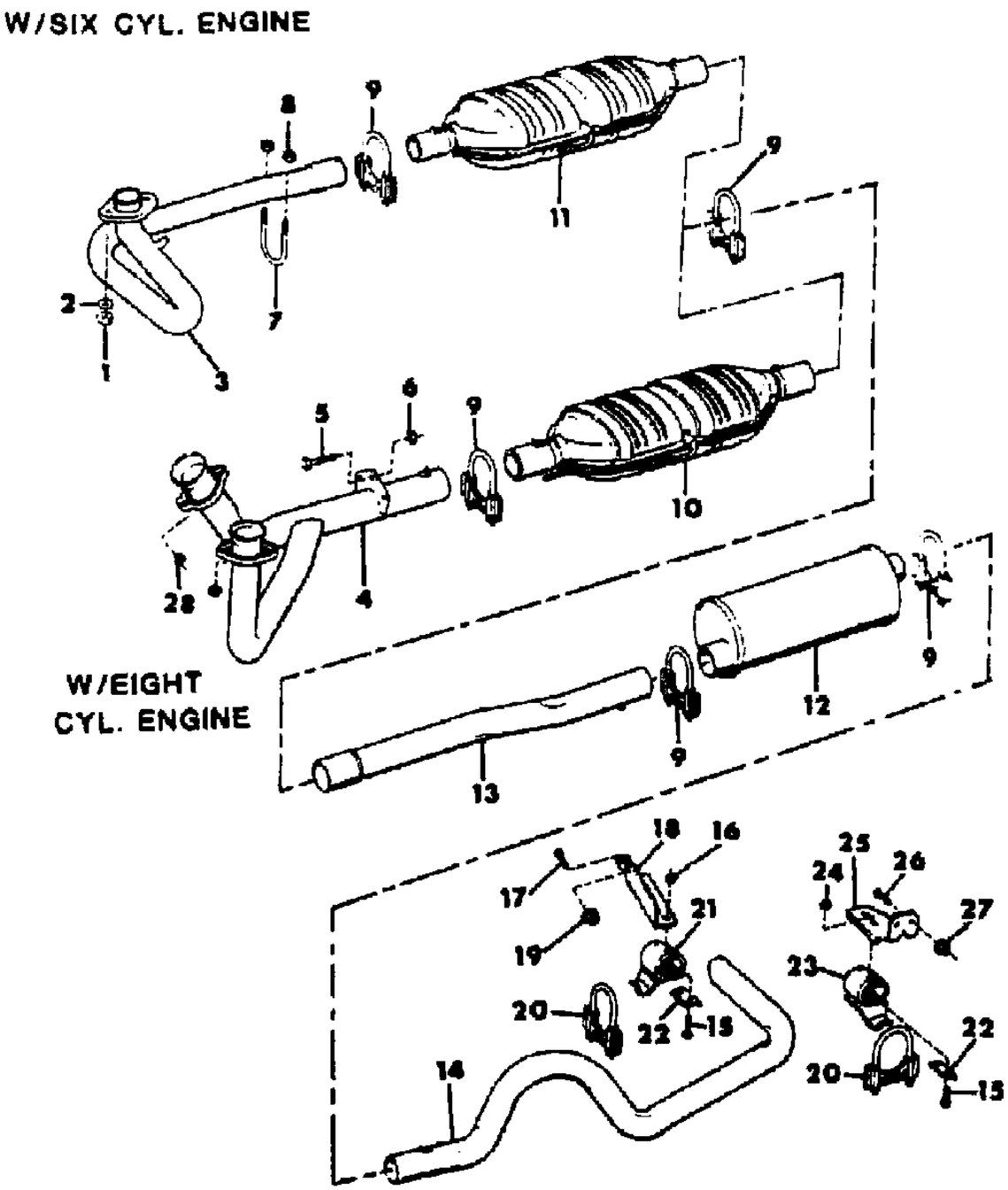

ITEM	PART NUMBER	QTY	BODY	MODEL	DESCRIPTION
	J536 1821	1			1981-83: US-49 States
	J536 1821	1			1984-86
13					PIPE, Intermediate
					Six Cylinder
	J536 2552	1		25	1981: US-49 States
	J536 2485	1		25	1981: US-California
	J536 2485	1		25	1982-85
	J536 2550	1		26	1981: US-49 States
	J536 2483	1		26	1981: US-California
	J536 2483	1		26	1982-85
					Eight Cylinder
	J536 2552	1		25	1981-83
	J536 4859	1		25	1984-85
	J536 2550	1		26,27	1981-83
	J536 4860	1		26,27	1984-86
14					TAILPIPE ***
					Six Cylinder
	J536 1952	1		25	
	J536 1954	1		26	
					Eight Cylinder
	J536 1989	1		25	1981-82: US-49 States
	J536 3117	1		25	1983-86
	J536 1985	1		26,27	1981-82: US-49 States
	J536 3119	1		26,27	1983-86
15	J018 0081	4			BOLT
16	J400 3954	2			NUT
17	J018 0121	2			BOLT
18	J535 8969	1			BRACKET, Front
19	J400 3909	2			NUT
20					CLAMP
	8330 0060	2			Six Cylinder
	8330 0062	2			Eight Cylinder
21	J536 3088	1			HANGER
22	J535 8978	2			PLATE
23	J536 3087	1			HANGER
24	J027 1184	2			NUT
25	J536 1940	1			BRACKET, Rear
26	J027 4319	2			SCREW
27	J400 4005	2			NUT

MODEL CODES

16=Cherokee 2 Dr.(1981-83)
17=Cherokee 2 Dr.(1981-83)
73=Cherokee 2WD-2 Dr.(1984-86)
74=Cherokee 2WD-4 Dr.(1984-86)
18=Cherokee 4 Dr.(1981-83)
77=Cherokee 4WD-2 Dr.(1984-86)
78=Cherokee 4WD-4 Dr.(1984-86)
85=CJ-5 (1981-83)
86=CJ-6(1981)
87=CJ-7(1981-86)
88=CJ-8, Scrambler(1981-86)
64=Comanche 2WD-6 Ft. Box(1986)
66=Comanche 2WD-7 Ft. Box(1986)
63=Comanche 4WD-6 Ft. Box(1986)
65=Comanche 4WD-7 Ft. Box(1986)
15=Grand Wagoneer 4 Dr.(1984-86)
25=J-10 Truck 7 Ft. Box(1981-84)
26=J10 Truck 8 Ft. Box(1981-86)
27=J-20 Truck 8 Ft. Box(1981-86)
15=Wagoneer 4 Dr.(1981-83)
75=Wagoneer 4WD-4 Dr.(1984-86)

BODY
CJ=CJ-5, CJ-6, CJ-7, CJ-8, Scrambler(1981-86)
MJ=Comanche Pickup(1986)

STYLES
SJ=Wagoneer(1981-83), Grand Wagoneer(1984-86), Cherokee(1981-83), J-10, J-20(1981-86)
XJ=Wagoneer(1984-86), Cherokee(1984-86)

AR = Use as Required - = Non Illustrated Part P.A.R. = Paint as Required

81J11 1000

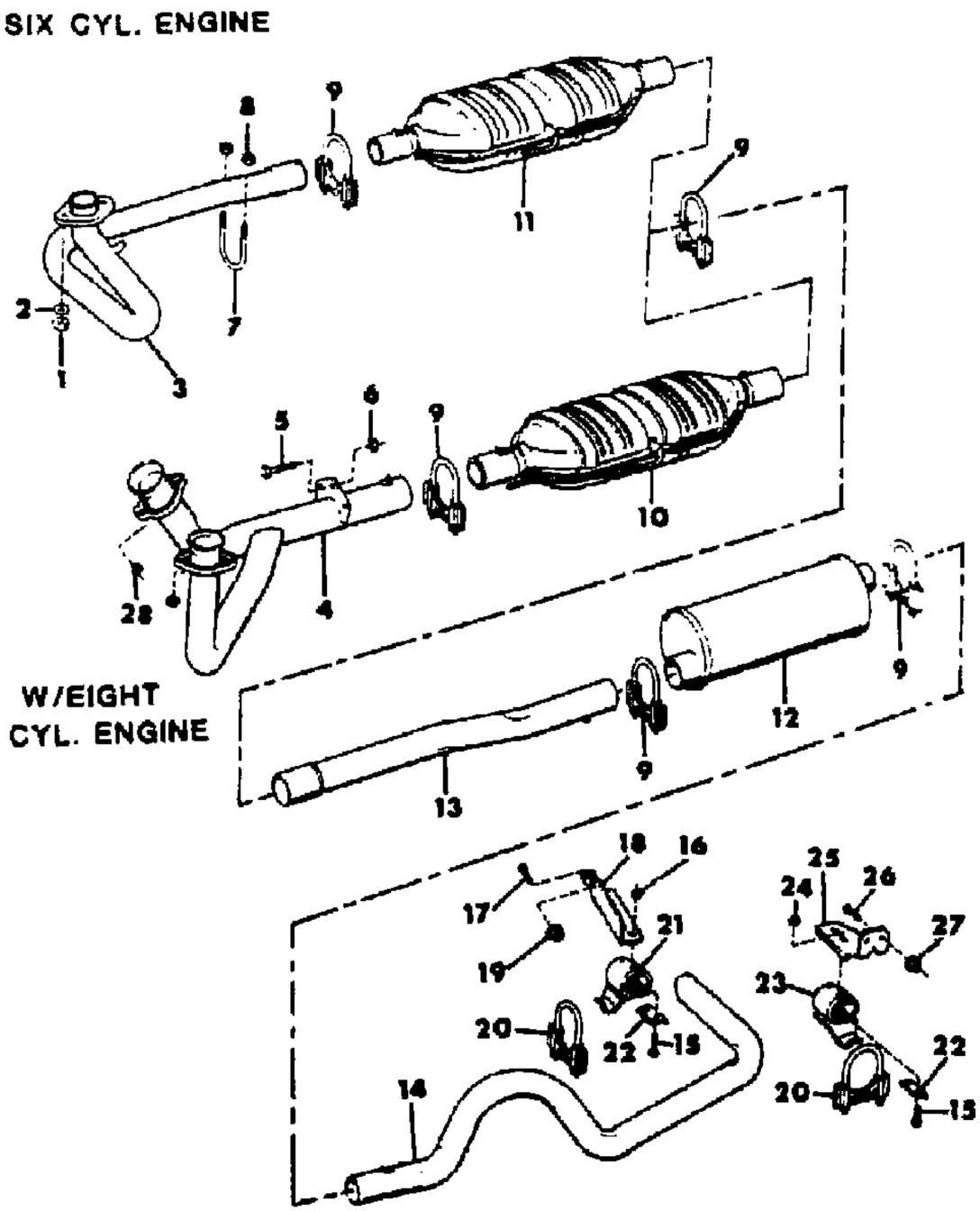

ITEM	PART NUMBER	QTY	BODY	MODEL	DESCRIPTION
28	J400 3869	4			NUT

MODEL CODES
16=Cherokee 2 Dr.(1981-83)
17=Cherokee 2 Dr.(1981-83)
73=Cherokee 2WD-2 Dr.(1984-86)
74=Cherokee 2WD-4 Dr.(1984-86)
18=Cherokee 4 Dr.(1981-83)
77=Cherokee 4WD-2 Dr.(1984-86)
78=Cherokee 4WD-4 Dr.(1984-86)
85=CJ-5 (1981-83)
86=CJ-6(1981)
87=CJ-7(1981-86)
88=CJ-8, Scrambler(1981-86)
64=Comanche 2WD-6 Ft. Box(1986)
66=Comanche 2WD-7 Ft. Box(1986)
63=Comanche 4WD-6 Ft. Box(1986)
65=Comanche 4WD-7 Ft. Box(1986)
15=Grand Wagoneer 4 Dr.(1984-86)
25=J-10 Truck 7 Ft. Box(1981-84)
26=J10 Truck 8 Ft. Box(1981-86)
27=J-20 Truck 8 Ft. Box(1981-86)
15=Wagoneer 4 Dr.(1981-83)
75=Wagoneer 4WD-4 Dr.(1984-86)

BODY
CJ=CJ-5, CJ-6, CJ-7, CJ-8, Scrambler(1981-86)
MJ=Comanche Pickup(1986)

STYLES
SJ=Wagoneer(1981-83), Grand Wagoneer(1984-86), Cherokee(1981-83), J-10, J-20(1981-86)
XJ=Wagoneer(1984-86), Cherokee(1984-86)

AR = Use as Required - = Non Illustrated Part P.A.R. = Paint as Required

EXHAUST SYSTEM, CANADA, NON-REGULATED MARKETS SIX AND EIGHT CYLINDER ENGINES J10, J20
Figure 11-1100

81J111100

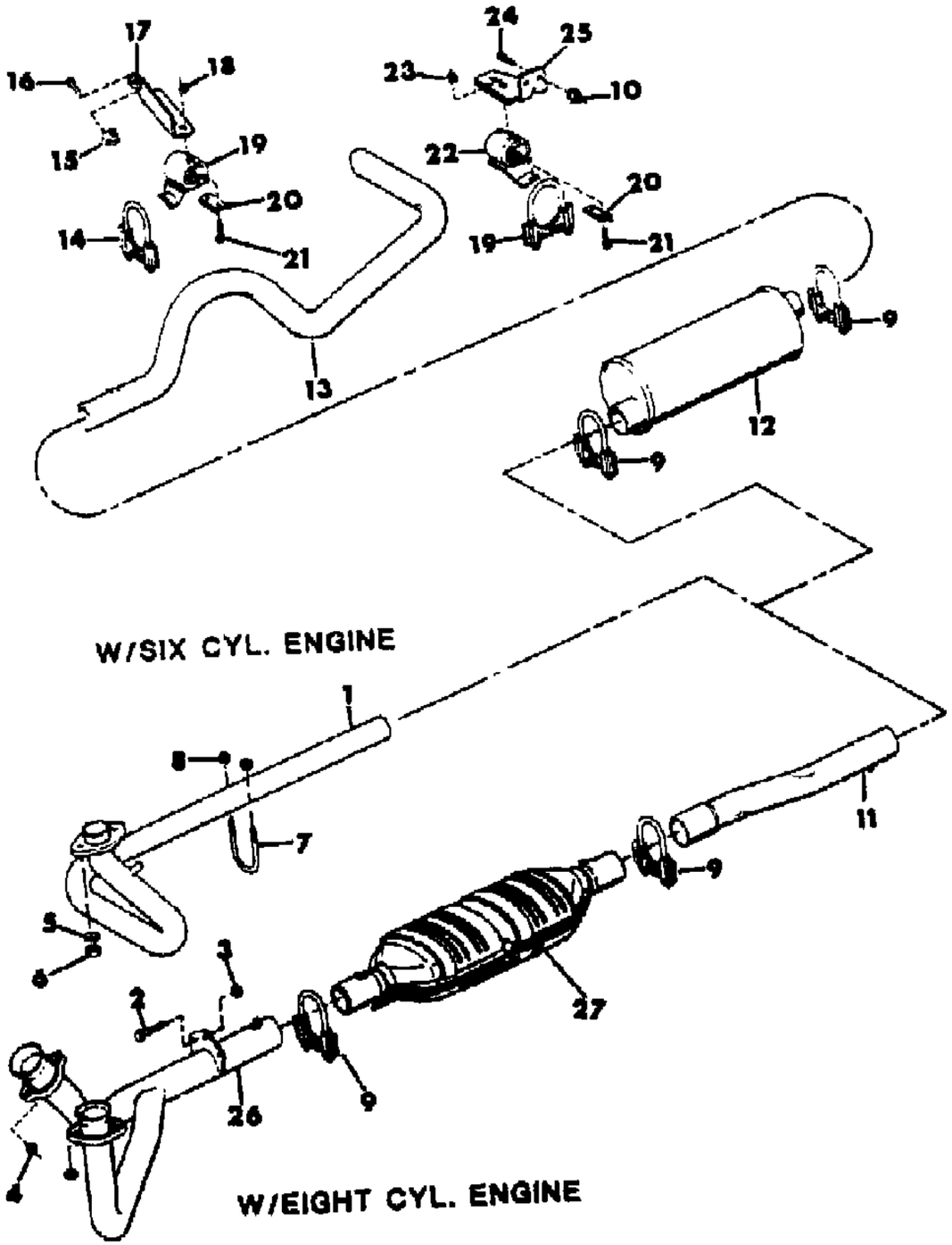

ITEM	PART NUMBER	QTY	BODY	MODEL	DESCRIPTION
1					PIPE, Exhaust, Front
	J536 1788	1		25,26	1981: Australian Design Rules, Economic Commission of Europe, Non-Regulated Markets, with Four Speed Transmission
	J536 1788	1		25,26	1981-82: CANADA, with Four Speed Transmission
	J536 1789	1		25,26	1981-82: CANADA, with Automatic Transmission
	J536 3381	1		25,26	1982: CANADA, with Five Speed Transmission
	J536 4503	1		25,26	1983-86: CANADA
	J536 1789	1		25,26	1981: Australian Design Rules, Economic Commission of Europe, Non-Regulated Markets, with Automatic Transmission
	J536 1788	1		25,26	1982-83: EXPORT, with Four Speed Transmission
	J536 3381	1		25,26	1982-86: EXPORT, with Five Speed Transmission
	J536 1789	1		25,26	1982-86: EXPORT, with Automatic Transmission
	J536 4503	1		25,26	1984-86: EXPORT
	J536 1790	1		27	1981-82: EXPORT, with Four Speed Transmission
	J536 4505	1		27	1983-86: EXPORT
2	J018 0132	1			BOLT
3	J400 5142	1			NUT
4	J400 3869	4			NUT
5	J400 1181	2			WASHER
6	J400 6567	2			NUT
7	J094 1013	1			U-BOLT
8	J012 0376	2			NUT
9					CLAMP
	8330 0060	4			Six Cylinder
	J535 8827	4			Eight Cylinder
10	J400 4005	2			NUT
11					PIPE, Exhaust, Rear
					Six Cylinder
	J536 3939	1		25,26	1982-86: EXPORT
					Eight Cylinder
	J536 3941	1		25,26	1982-83: EXPORT
	J536 3943	1		27	1982-83: EXPORT, with Automatic Transmission
	J536 3941	1		27	1982-83: EXPORT, with Manual Transmission
	J536 5061	1		27	1984-86: EXPORT
12					MUFFLER
					Six Cylinder
	J536 1838	1		25,26	CANADA

MODEL CODES

16=Cherokee 2 Dr.(1981-83)	78=Cherokee 4WD-4 Dr.(1984-86)	64=Comanche 2WD-6 Ft. Box(1986)	25=J-10 Truck 7 Ft. Box(1981-84)
17=Cherokee 2 Dr.(1981-83)	85=CJ-5 (1981-83)	66=Comanche 2WD-7 Ft. Box(1986)	26=J10 Truck 8 Ft. Box(1981-86)
73=Cherokee 2WD-2 Dr.(1984-86)	86=CJ-6(1981)	63=Comanche 4WD-6 Ft. Box(1986)	27=J-20 Truck 8 Ft. Box(1981-86)
74=Cherokee 2WD-4 Dr.(1984-86)	87=CJ-7(1981-86)	65=Comanche 4WD-7 Ft. Box(1986)	15=Wagoneer 4 Dr.(1981-83)
18=Cherokee 4 Dr.(1981-83)	88=CJ-8, Scrambler(1981-86)	15=Grand Wagoneer 4 Dr.(1984-86)	75=Wagoneer 4WD-4 Dr.(1984-86)
77=Cherokee 4WD-2 Dr.(1984-86)			

BODY
CJ=CJ-5, CJ-6, CJ-7, CJ-8, Scrambler(1981-86)
MJ=Comanche Pickup(1986)

STYLES
SJ=Wagoneer(1981-83), Grand Wagoneer(1984-86), Cherokee(1981-83), J-10, J-20(1981-86)
XJ=Wagoneer(1984-86), Cherokee(1984-86)

AR = Use as Required - = Non Illustrated Part P.A.R. = Paint as Required

« RETURN TO GROUP INDEX »

EXHAUST SYSTEM, CANADA, NON-REGULATED MARKETS SIX AND EIGHT CYLINDER ENGINES J10, J20
Figure 11-1100

81J111100

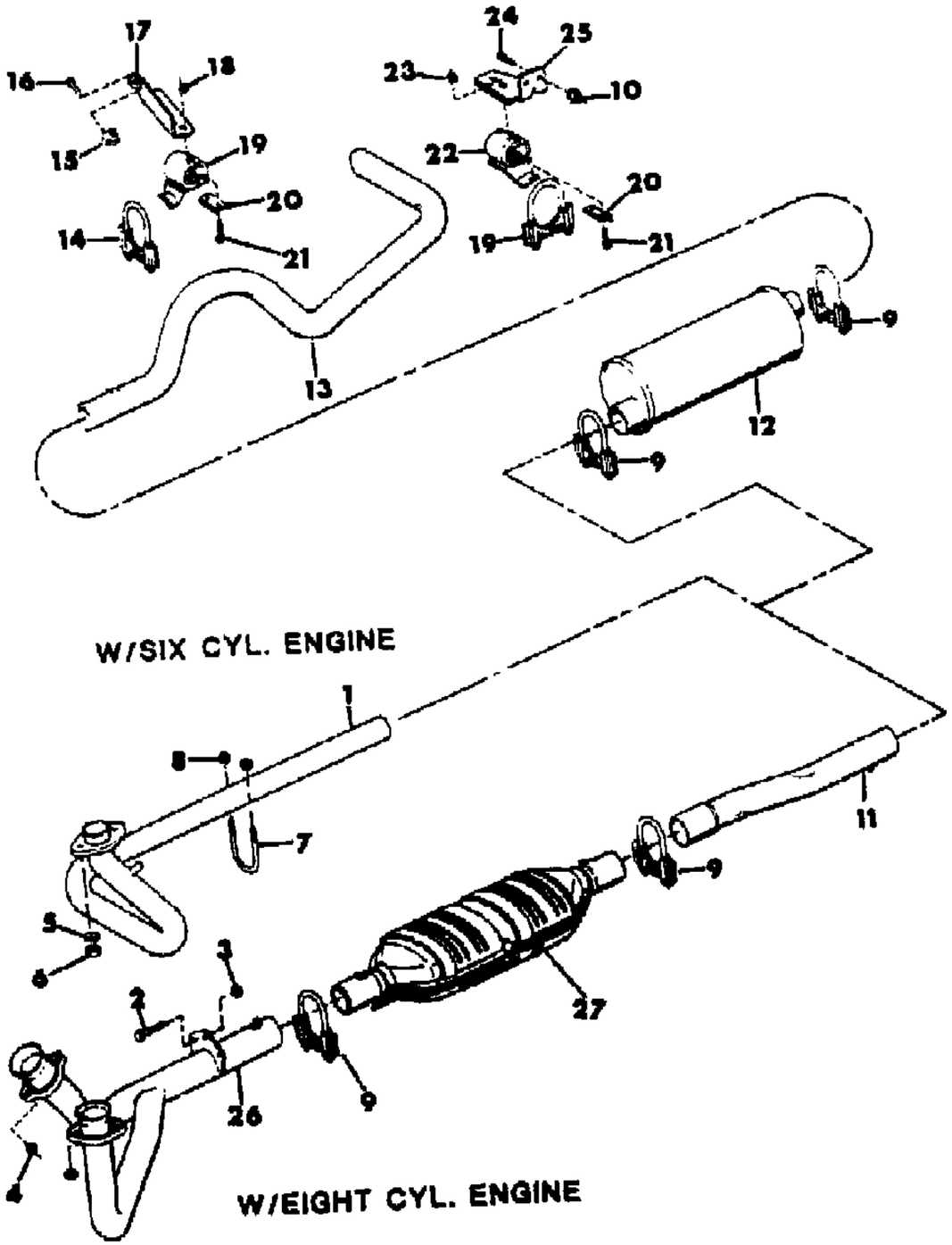

ITEM	PART NUMBER	QTY	BODY	MODEL	DESCRIPTION
	J536 1838	1			EXPORT
					Eight Cylinder
	J536 1842	1		25,26	CANADA
	J536 1821	1		27	CANADA
	J536 1842	1		27	EXPORT
13					TAILPIPE ***
					Six Cylinder
	J536 1950	1		25	CANADA
	J536 1950	1		25	EXPORT
	J536 1958	1		26	CANADA
	J536 1958	1		26,27	EXPORT
					Eight Cylinder
	J536 1991	1		25	CANADA
	J536 1991	1		25	EXPORT
	J536 1985	1		26	CANADA
	J536 1987	1		26,27	EXPORT
	J536 1985	1		27	1981-82: CANADA
	J536 3119	1		27	1983-86: CANADA
14					CLAMP
	8330 0060	2			Six Cylinder
	8330 0062	2			Eight Cylinder
15	J400 3909	2			NUT
16	J018 0121	2			BOLT
17	J535 8969	1			BRACKET, Front
18	J400 3954	2			NUT
19	J536 3088	1			HANGER
20	J535 8978	2			PLATE
21	J018 0081	4			BOLT
22	J536 3087	1			HANGER
23	J027 1184	2			NUT
24	J027 4319	2			SCREW
25	J536 1940	1			BRACKET, Rear
26					PIPE, Exhaust, Front
	J536 1783	1		25,26	CANADA, with Four Speed Transmission
	J536 1784	1		25,26	CANADA, with Automatic Transmission
	J536 2535	1		27	CANADA, with Four Speed Transmission
	J536 2536	1		27	CANADA, with Automatic Transmission
	J536 1783	1		25,26	EXPORT, with Four Speed Transmission
	J536 1785	1		27	EXPORT, with Four Speed Transmission

MODEL CODES

16=Cherokee 2 Dr.(1981-83)	78=Cherokee 4WD-4 Dr.(1984-86)	64=Comanche 2WD-6 Ft. Box(1986)	25=J-10 Truck 7 Ft. Box(1981-84)
17=Cherokee 2 Dr.(1981-83)	85=CJ-5 (1981-83)	66=Comanche 2WD-7 Ft. Box(1986)	26=J10 Truck 8 Ft. Box(1981-86)
73=Cherokee 2WD-2 Dr.(1984-86)	86=CJ-6(1981)	63=Comanche 4WD-6 Ft. Box(1986)	27=J-20 Truck 8 Ft. Box(1981-86)
74=Cherokee 2WD-4 Dr.(1984-86)	87=CJ-7(1981-86)	65=Comanche 4WD-7 Ft. Box(1986)	15=Wagoneer 4 Dr.(1981-83)
18=Cherokee 4 Dr.(1981-83)	88=CJ-8, Scrambler(1981-86)	15=Grand Wagoneer 4 Dr.(1984-86)	75=Wagoneer 4WD-4 Dr.(1984-86)
77=Cherokee 4WD-2 Dr.(1984-86)			

BODY
CJ=CJ-5, CJ-6, CJ-7, CJ-8, Scrambler(1981-86)
MJ=Comanche Pickup(1986)

STYLES
SJ=Wagoneer(1981-83), Grand Wagoneer(1984-86), Cherokee(1981-83), J-10, J-20(1981-86)
XJ=Wagoneer(1984-86), Cherokee(1984-86)

AR = Use as Required - = Non Illustrated Part P.A.R. = Paint as Required

EXHAUST SYSTEM, CANADA, NON-REGULATED MARKETS SIX AND EIGHT CYLINDER ENGINES J10, J20
Figure 11-1100

81J111100

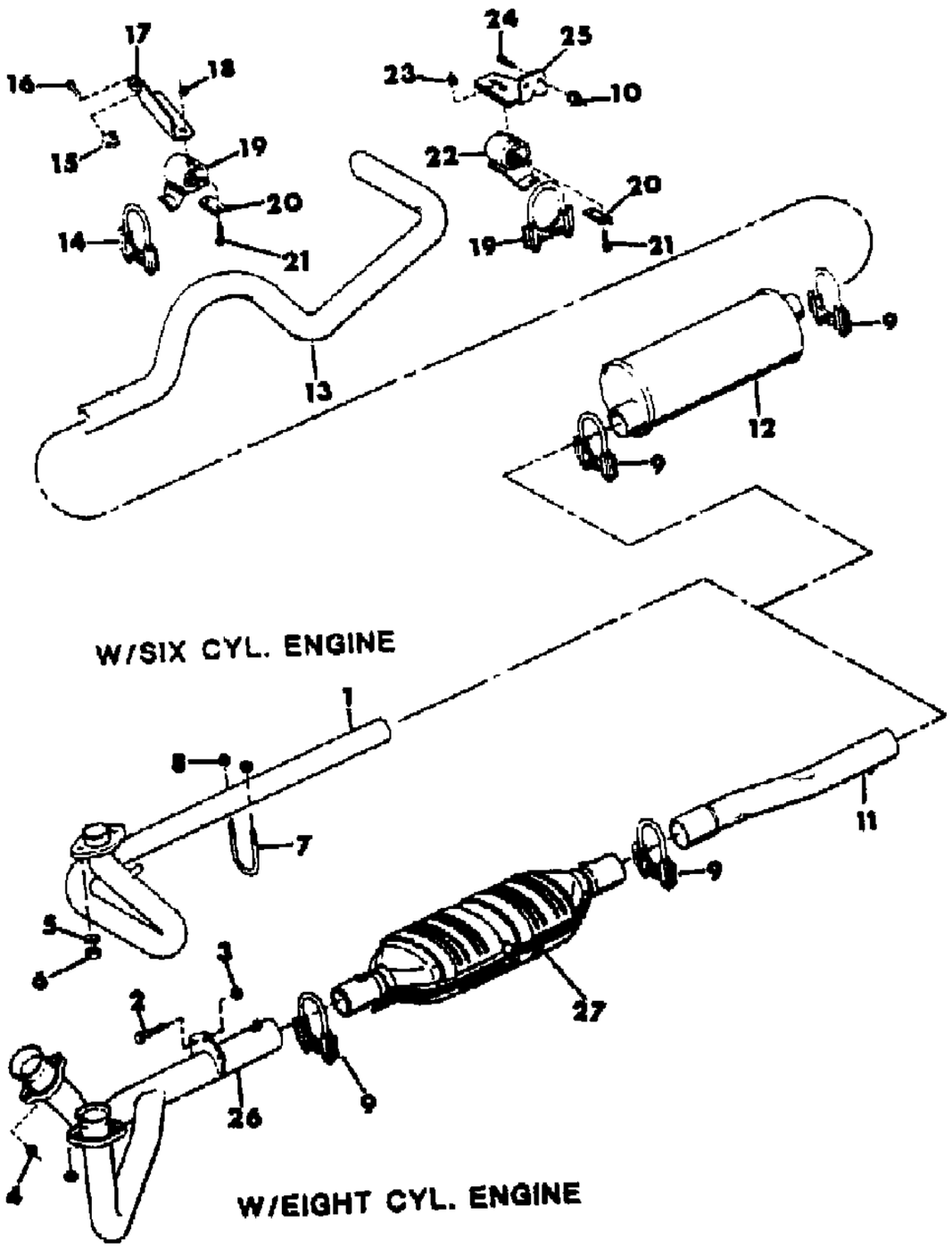

ITEM	PART NUMBER	QTY	BODY	MODEL	DESCRIPTION
	J536 1784	1		27	EXPORT, with Automatic Transmission
27					CONVERTER, Catalytic
					Eight Cylinder
	J537 0051	1			1981-83
	J537 0145	1			1984-86

MODEL CODES

16=Cherokee 2 Dr.(1981-83)	78=Cherokee 4WD-4 Dr.(1984-86)	64=Comanche 2WD-6 Ft. Box(1986)	25=J-10 Truck 7 Ft. Box(1981-84)
17=Cherokee 2 Dr.(1981-83)	85=CJ-5 (1981-83)	66=Comanche 2WD-7 Ft. Box(1986)	26=J10 Truck 8 Ft. Box(1981-86)
73=Cherokee 2WD-2 Dr.(1984-86)	86=CJ-6(1981)	63=Comanche 4WD-6 Ft. Box(1986)	27=J-20 Truck 8 Ft. Box(1981-86)
74=Cherokee 2WD-4 Dr.(1984-86)	87=CJ-7(1981-86)	65=Comanche 4WD-7 Ft. Box(1986)	15=Wagoneer 4 Dr.(1981-83)
18=Cherokee 4 Dr.(1981-83)	88=CJ-8, Scrambler(1981-86)	15=Grand Wagoneer 4 Dr.(1984-86)	75=Wagoneer 4WD-4 Dr.(1984-86)
77=Cherokee 4WD-2 Dr.(1984-86)			

BODY
CJ=CJ-5, CJ-6, CJ-7, CJ-8, Scrambler(1981-86)
MJ=Comanche Pickup(1986)

STYLES
SJ=Wagoneer(1981-83), Grand Wagoneer(1984-86), Cherokee(1981-83), J-10, J-20(1981-86)
XJ=Wagoneer(1984-86), Cherokee(1984-86)

AR = Use as Required - = Non Illustrated Part P.A.R. = Paint as Required

ILLUSTRATION NOT AVAILABLE AT TIME OF PUBLICATION

GROUP 13 - FRAME & BUMPERS

ILLUSTRATION TITLE	GROUP-FIG. NO.
FRAME AND COMPONENTS CJ	Fig. 13-100
MOUNTING HARDWARE, BODY CJ	Fig. 13-200
BUMPER, FRONT TOWING EYES AND HOOKS CJ	Fig. 13-300
TOW BAR, FRONT CJ	Fig. 13-400
BUMPER, REAR DRAW BAR, PINTLE HOOK, TOWING EYES CJ	Fig. 13-500
BUMPER, REAR STEP SCRAMBLER	Fig. 13-600
WINCH CONTROLS RAMSEY 2000 OR 2001 OR 7901 CJ, SJ CHEROKEE, SJ WAGONEER, J10, J20	Fig. 13-700
WINCH MOUNTING, REGULAR RAMSEY 2000 OR 2001 CJ	Fig. 13-800
WINCH MOUNTING, LIGHTWEIGHT RAMSEY 2000 OR 2001 CJ	Fig. 13-900
WINCH MOTOR AND DRUM RAMSEY, 2000 OR 2001 CJ, SJ CHEROKEE, SJ WAGONEER, J10, J20	Fig. 13-1000
WINCH CONTROLS RAMSEY 6000 CJ	Fig. 13-1100
WINCH MOUNTING RAMSEY 6000 CJ	Fig. 13-1200
WINCH MOUNTING RAMSEY 6000 CJ	Fig. 13-1300
WINCH CONTROLS RAMSEY REP 6000 CJ, SJ CHEROKEE, SJ WAGONEER, J10, J20	Fig. 13-1400
WINCH MOUNTING RAMSEY REP 6000 CJ	Fig. 13-1500
WINCH MOTOR AND DRUM RAMSEY REP 6000 CJ, SJ CHEROKEE, SJ WAGONEER, J10, J20	Fig. 13-1600
WINCH CONTROLS WARN 8274 OR 9854 CJ, SJ CHEROKEE, SJ WAGONEER, J10, J20	Fig. 13-1700
WINCH MOUNTING WARN 8274 OR 9854 CJ	Fig. 13-1800
WINCH MOUNTING WARN 8274 OR 9854 CJ, SJ CHEROKEE, SJ WAGONEER, J10, J20	Fig. 13-1900
WINCH, PORTABLE ELECTRIC A15-12 OR A30-12C CJ, SJ CHEROKEE, SJ WAGONEER, J10, J20	Fig. 13-2000
WINCH, PORTABLE ELECTRIC A15-12C CJ, SJ CHEROKEE, SJ WAGONEER, J10, J20	Fig. 13-2100
SNOW PLOW - POWER LIFT UNIT CJ, XJ CHEROKEE, XJ WAGONEER, SJ CHEROKEE, SJ WAGONEER, J10, J20	Fig. 13-2200
SNOW PLOW LIFT RAM AND RESERVOIR, HYDRAULIC CJ, SJ CHEROKEE, SJ WAGONEER, J10, J20	Fig. 13-2300
SNOW PLOW HYDRAULIC PUMP CJ, SJ CHEROKEE, SJ WAGONEER, J10, J20	Fig. 13-2400
SNOW PLOW HYDRAULIC CONTROL VALVES CJ, SJ CHEROKEE, SJ WAGONEER, J10, J20	Fig. 13-2500
SNOW PLOW OPERATING CONTROLS AND SWITCHES CJ, SJ CHEROKEE, SJ WAGONEER, J10, J20	Fig. 13-2600
SNOW PLOW MOLDBOARD AND MOUNTING CJ	Fig. 13-2700
SNOW PLOW - POWER ANGLING CYLINDERS CJ, XJ CHEROKEE, XJ WAGONEER, COMANCHE, SJ CHEROKEE, SJ WAGONEER, J10, J20	Fig. 13-2800
MOUNTING HARDWARE PICKUP BOX COMANCHE	Fig. 13-2900
BUMPER, FRONT XJ CHEROKEE, XJ WAGONEER, COMANCHE	Fig. 13-3000
BUMPER, REAR XJ CHEROKEE, XJ WAGONEER, COMANCHE	Fig. 13-3100
BUMPER, REAR STEP COMMANCHE	Fig. 13-3200
WINCH CONTROLS HIDDEN WINCH XJ CHEROKEE, XJ WAGONEER, COMANCHE	Fig. 13-3300
WINCH MOUNTING HIDDEN WINCH XJ CHEROKEE, XJ WAGONEER, COMANCHE	Fig. 13-3400
WINCH MOTOR AND DRUM HIDDEN WINCH XJ CHEROKEE, XJ WAGONEER, COMANCHE	Fig. 13-3500
HARNESS, TRAILER TOWING CJ, EXPORT	Fig. 13-3600
HITCH, TRAILER LIGHT DUTY XJ CHEROKEE, XJ WAGONEER	Fig. 13-3700

ILLUSTRATION TITLE	GROUP-FIG. NO.
EXHAUST SYSTEMS (Continued)	
HITCH, TRAILER LIGHT DUTY XJ CHEROKEE, XJ WAGONEER	Fig. 13-3700
HITCH, TRAILER HEAVY DUTY XJ CHEROKEE, XJ WAGONEER	Fig. 13-3800
SNOW PLOW OPERATING CONTROLS AND SWITCHES, 1984-85 XJ CHEROKEE, XJ WAGONEER	Fig. 13-3900
SNOW PLOW OPERATING CONTROLS AND SWITCHES, 1986 XJ CHEROKEE, XJ WAGONEER, COMANCHE	Fig. 13-4000
SNOW PLOW OPERATING CONTROLS AND SWITCHES, 1986 XJ CHEROKEE, XJ WAGONEER, COMANCHE	Fig. 13-4100
FRAME ASSEMBLY SJ CHEROKEE, SJ WAGONEER J10, J20	Fig. 13-4200
FRAME AND COMPONENTS SJ CHEROKEE, SJ WAGONEER J10, J20	Fig. 13-4300
MOUNTING HARDWARE, BODY SJ CHEROKEE, SJ WAGONEER J10, J20	Fig. 13-4400
BUMPER, FRONT SJ CHEROKEE, SJ WAGONEER J10, J20	Fig. 13-4500
BRUSH GUARD, FRONT J10, J20	Fig. 13-4600
BUMPERS, REAR SJ CHEROKEE, SJ WAGONEER, J10, J20	Fig. 13-4700
BUMPERETTES, REAR SEVERE USE, EXPORT J20	Fig. 13-4800
HARNESS, TRAILER TOWING WITHOUT EQUALIZER HITCH SJ CHEROKEE, SJ WAGONEER	Fig. 13-4900
HARNESS, TRAILER TOWING WITHOUT EQUALIZER HITCH SJ CHEROKEE, SJ WAGONEER	Fig. 13-5000
HITCH, TRAILER PINTLE HOOK J10, J20	Fig. 13-5100
WINCH MOUNTING RAMSEY 2000 0R 2001 SJ CHEROKEE, SJ WAGONEER, J10, J20	Fig. 13-5200
WINCH MOUNTING RAMSEY 7901 (HIDDEN WINCH) SJ CHEROKEE, SJ WAGONEER, J10, J20	Fig. 13-5300
WINCH, MOTOR AND DRUM RAMSEY 7901 (HIDDEN WINCH) SJ CHEROKEE, SJ WAGONEER, J10, J20	Fig. 13-5400
WINCH MOUNTING RAMSEY REP 6000 SJ CHEROKEE, SJ WAGONEER, J10, J20	Fig. 13-5500
WINCH MOUNTING WARN 8274 OR 9854 SJ CHEROKEE, SJ WAGONEER, J10, J20	Fig. 13-5600
SNOW PLOW MOLDBOARD AND MOUNTING SJ CHEROKEE, SJ WAGONEER, J10, J20	Fig. 13-5700

FRAME AND COMPONENTS CJ
Figure 13-100

81J13 100

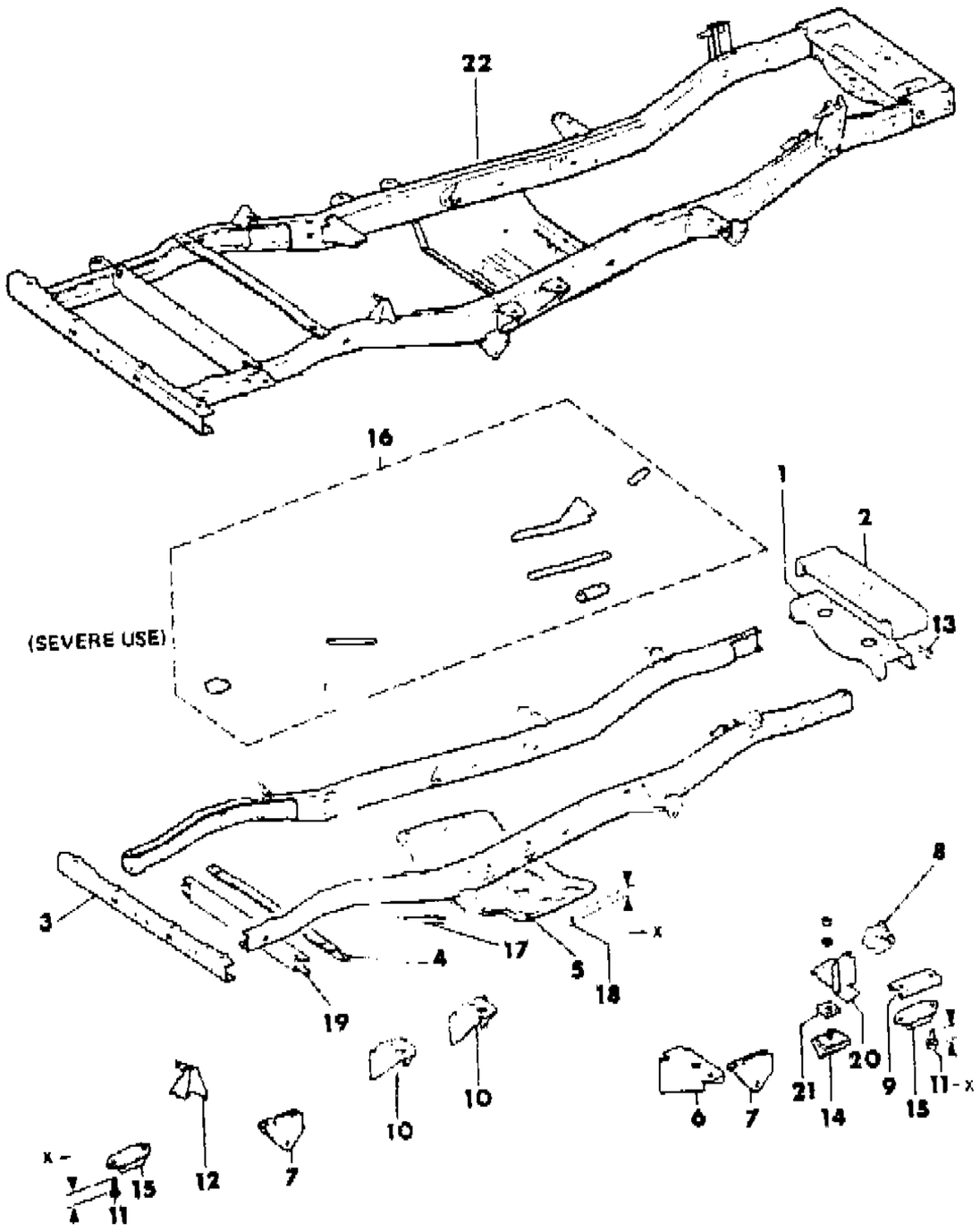

ITEM	PART NUMBER	QTY	BODY	MODEL	DESCRIPTION
1	J812 7708	1			CROSSMEMBER, Front
2	J575 8048	1			COVER
3	J812 7711	1			CROSSMEMBER, Rear
4	J813 3428	1			CROSSMEMBER
5	J535 9522	1			CROSSMEMBER
6	J812 6590	1			BRACKET, Body, #1
7	J812 7712	1			BRACKET, Spring Mounting
8					BRACKET, Shock Absorber
	J812 6587	2			1981
	J536 3318-9	1			1982-86
9	J535 5682	2			REINFORCEMENT
10	J812 6593	6			BRACKET, Body, #2, #3
11					BOLT
	J400 5063	AR			.62" long
	J400 3060	AR			1.25" long
12	J812 7713	2			BRACKET, Shock Absorber
13	J400 6850	4			BOLT
14	J535 4848	1			BUMPER, Axle
15	J535 5483	4			BUMPER
16					REINFORCEMENT PACKAGE ***
	J805 1895	1		87	
	J805 1770	1		88	
17	J805 1873	1			REINFORCEMENT
18					BOLT
	J027 3773	AR			.75" long
	J400 5664	AR			1.12" long
19	J813 3429	1			CROSSMEMBER
20	J812 6586	1			BRACKET, Right
21	J099 8283	1			SPACER, Right
22					FRAME, Assembly
	J536 2104	1		85	1981
	J536 3233	1		85	1982-83
	J536 2110	1		86	1981: Export, Diesel
	J536 2118	1		87	1981
	J536 3234	1		87	1982-86
	J536 2490	1		88	1981
	J536 3285	1		88	1982-86

MODEL CODES

16=Cherokee 2 Dr.(1981-83)	78=Cherokee 4WD-4 Dr.(1984-86)	64=Comanche 2WD-6 Ft. Box(1986)	25=J-10 Truck 7 Ft. Box(1981-84)
17=Cherokee 2 Dr.(1981-83)	85=CJ-5 (1981-83)	66=Comanche 2WD-7 Ft. Box(1986)	26=J10 Truck 8 Ft. Box(1981-86)
73=Cherokee 2WD-2 Dr.(1984-86)	86=CJ-6(1981)	63=Comanche 4WD-6 Ft. Box(1986)	27=J-20 Truck 8 Ft. Box(1981-86)
74=Cherokee 2WD-4 Dr.(1984-86)	87=CJ-7(1981-86)	65=Comanche 4WD-7 Ft. Box(1986)	15=Wagoneer 4 Dr.(1981-83)
18=Cherokee 4 Dr.(1981-83)	88=CJ-8, Scrambler(1981-86)	15=Grand Wagoneer 4 Dr.(1984-86)	75=Wagoneer 4WD-4 Dr.(1984-86)
77=Cherokee 4WD-2 Dr.(1984-86)			

BODY
CJ=CJ-5, CJ-6, CJ-7, CJ-8, Scrambler(1981-86)
MJ=Comanche Pickup(1986)

STYLES
SJ=Wagoneer(1981-83), Grand Wagoneer(1984-86), Cherokee(1981-83), J-10, J-20(1981-86)
XJ=Wagoneer(1984-86), Cherokee(1984-86)

AR = Use as Required - = Non Illustrated Part P.A.R. = Paint as Required

« RETURN TO GROUP INDEX

MOUNTING HARDWARE, BODY CJ
Figure 13-200

81J13 200

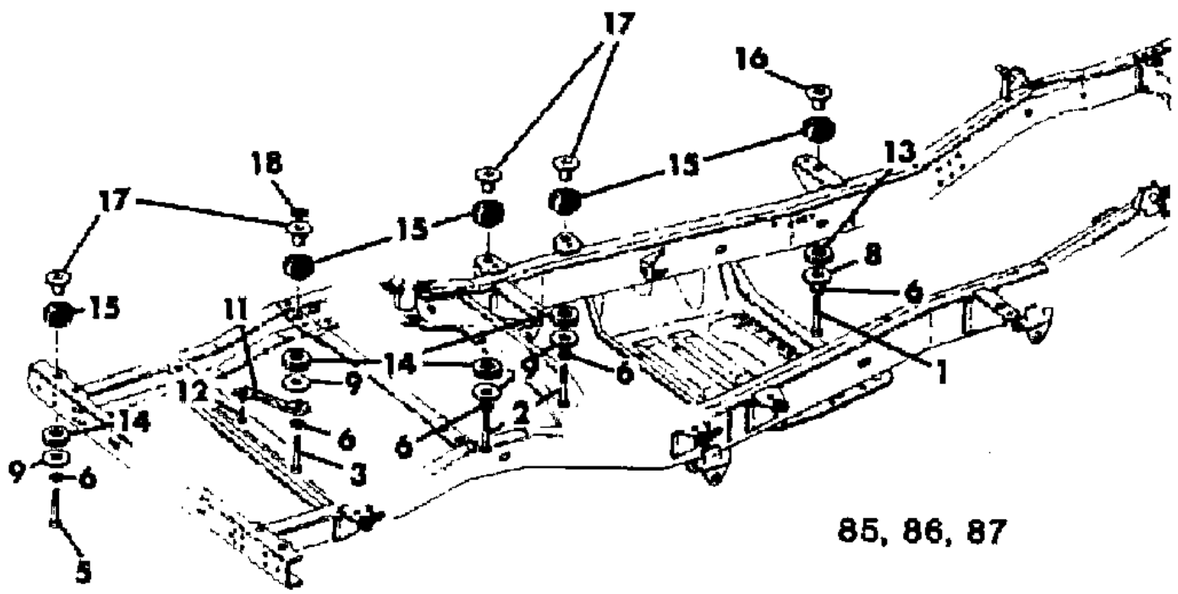

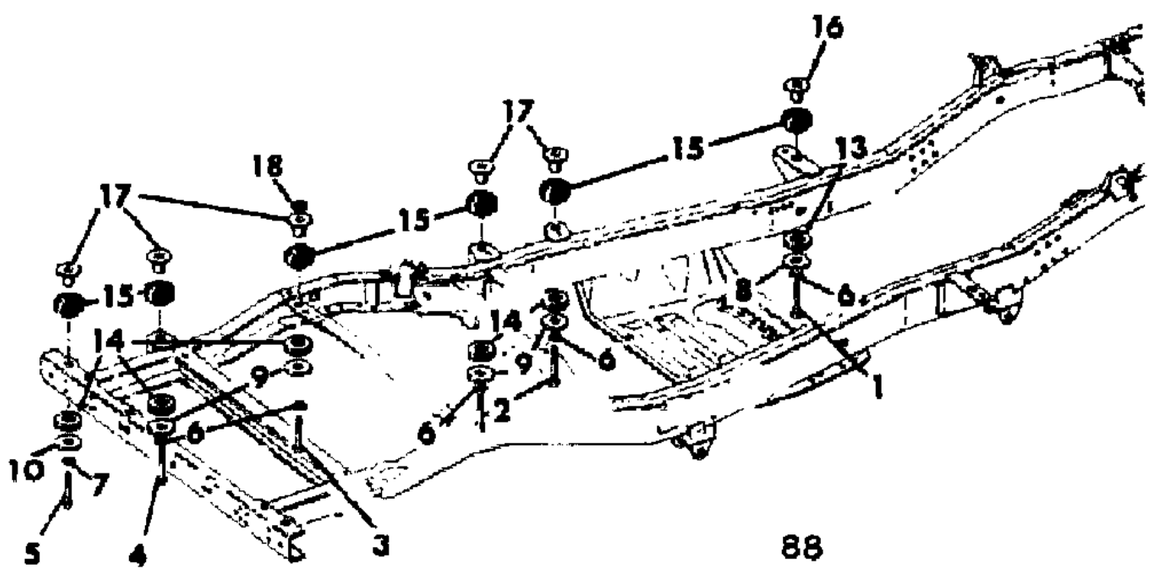

ITEM	PART NUMBER	QTY	BODY	MODEL	DESCRIPTION
1	J400 6182	2			BOLT
2	J400 5828	4			BOLT
3					BOLT
	J400 6420	2			2.50" Long
	J400 5828	2			2.25" Long
4					BOLT
	J400 5625	2		88	2.50" Long
	J400 5828	2		88	2.25" Long
5					BOLT
	J400 5625	2			2.50" Long
	J400 5828	2		85,86,8	2.25" Long
6	J400 4711	AR			WASHER
7	J400 5633	2		88	WASHER, Conical
8	J400 5641	2			WASHER
9	J400 5697	AR			WASHER
10	J400 6419	2		88	WASHER
11	J575 0923	2		85,86,8	BRACKET
12	J099 8593	2		85,86,8	BOLT
13	J545 9515	2			SPACER
14	J546 2446	AR			SPACER
15	J546 2447	AR			SPACER
16	J575 0008	2			WASHER AND TUBE ***
17	J545 5291	AR			WASHER AND TUBE ***
18	J400 3084	2			NUT

MODEL CODES
16=Cherokee 2 Dr.(1981-83)
17=Cherokee 2 Dr.(1981-83)
73=Cherokee 2WD-2 Dr.(1984-86)
74=Cherokee 2WD-4 Dr.(1984-86)
18=Cherokee 4 Dr.(1981-83)
77=Cherokee 4WD-2 Dr.(1984-86)
78=Cherokee 4WD-4 Dr.(1984-86)
85=CJ-5 (1981-83)
86=CJ-6(1981)
87=CJ-7(1981-86)
88=CJ-8, Scrambler(1981-86)
64=Comanche 2WD-6 Ft. Box(1986)
66=Comanche 2WD-7 Ft. Box(1986)
63=Comanche 4WD-6 Ft. Box(1986)
65=Comanche 4WD-7 Ft. Box(1986)
15=Grand Wagoneer 4 Dr.(1984-86)
25=J-10 Truck 7 Ft. Box(1981-84)
26=J10 Truck 8 Ft. Box(1981-86)
27=J-20 Truck 8 Ft. Box(1981-86)
15=Wagoneer 4 Dr.(1981-83)
75=Wagoneer 4WD-4 Dr.(1984-86)

BODY
CJ=CJ-5, CJ-6, CJ-7, CJ-8, Scrambler(1981-86)
MJ=Comanche Pickup(1986)

STYLES
SJ=Wagoneer(1981-83), Grand Wagoneer(1984-86), Cherokee(1981-83), J-10, J-20(1981-86)
XJ=Wagoneer(1984-86), Cherokee(1984-86)

AR = Use as Required - = Non Illustrated Part P.A.R. = Paint as Required

« RETURN TO GROUP INDEX

BUMPER, FRONT TOWING EYES AND HOOKS CJ
Figure 13-300

81J13 300

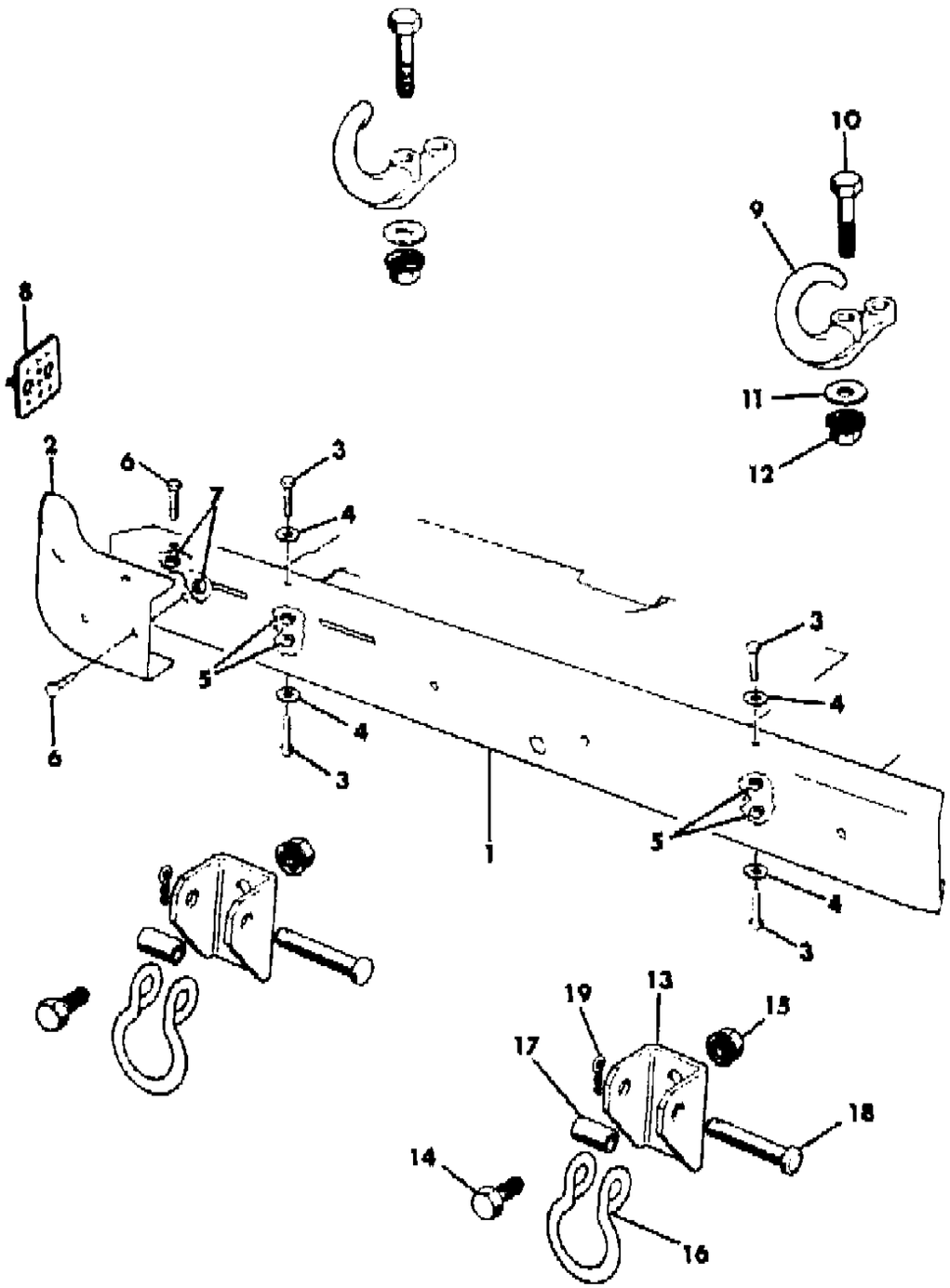

ITEM	PART NUMBER	QTY	BODY	MODEL	DESCRIPTION
1					RAIL, Bumper
	J535 5342	1			Black
	J535 9718	1			Chrome
2					EXTENSION, Rail
	J099 7348	2			Metal
	J536 3883	2			Plastic
3					BOLT
	J400 6811	4			Cadimum
	J400 6602	4			Chrome
4					WASHER
	J400 6601	4			Nylon
	J012 0394	4			Plain
5	J400 3909	4			NUT
6	J018 0121	8			BOLT
7					NUT
	J400 3909	8			With Metal Extension
	J400 6080	4			With Plastic Extension
8	J536 3881	2			PLATE, Limited
9	J536 2504-5	1			HOOK, Tow
10	J400 6843	4			BOLT
11	J400 6839	4			WASHER
12	J400 4008	4			NUT
13	J813 1740	2			BRACKET
14					BOLT
	J941 9105	4			1/2-13x2.00
	J941 9079	4			7/16-14x1.75
15					NUT
	J400 5098	4			1/2-13
	J400 3956	4			7/16-14
16	J813 1743	2			EYE, Towing ***
17	J813 1742	2			SPACER
18	J813 1741	2			PIN
19	J018 7988	2			PIN

MODEL CODES
16=Cherokee 2 Dr.(1981-83)
17=Cherokee 2 Dr.(1981-83)
73=Cherokee 2WD-2 Dr.(1984-86)
74=Cherokee 2WD-4 Dr.(1984-86)
18=Cherokee 4 Dr.(1981-83)
77=Cherokee 4WD-2 Dr.(1984-86)
78=Cherokee 4WD-4 Dr.(1984-86)
85=CJ-5 (1981-83)
86=CJ-6(1981)
87=CJ-7(1981-86)
88=CJ-8, Scrambler(1981-86)
64=Comanche 2WD-6 Ft. Box(1986)
66=Comanche 2WD-7 Ft. Box(1986)
63=Comanche 4WD-6 Ft. Box(1986)
65=Comanche 4WD-7 Ft. Box(1986)
15=Grand Wagoneer 4 Dr.(1984-86)
25=J-10 Truck 7 Ft. Box(1981-84)
26=J10 Truck 8 Ft. Box(1981-86)
27=J-20 Truck 8 Ft. Box(1981-86)
15=Wagoneer 4 Dr.(1981-83)
75=Wagoneer 4WD-4 Dr.(1984-86)

BODY
CJ=CJ-5, CJ-6, CJ-7, CJ-8, Scrambler(1981-86)
MJ=Comanche Pickup(1986)

STYLES
SJ=Wagoneer(1981-83), Grand Wagoneer(1984-86), Cherokee(1981-83), J-10, J-20(1981-86)
XJ=Wagoneer(1984-86), Cherokee(1984-86)

AR = Use as Required - = Non Illustrated Part P.A.R. = Paint as Required

« RETURN TO GROUP INDEX

TOW BAR, FRONT CJ
Figure 13-400

81J13 400

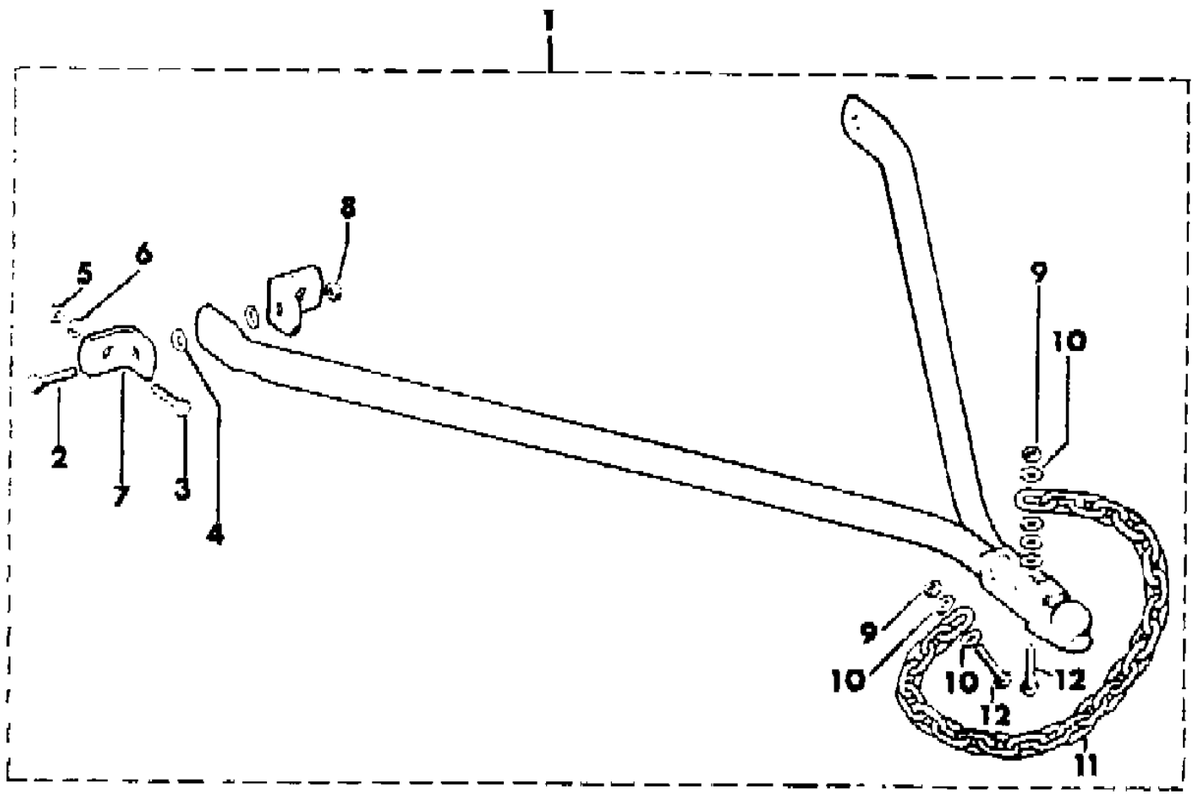

ITEM	PART NUMBER	QTY	BODY	MODEL	DESCRIPTION
1	J212 7000	1			TOW BAR ***
2	S018 0179	2			BOLT
3	S018 0177	4			BOLT
4	J813 1180	4			WASHER
5	S012 0378	4			NUT
6	S012 0384	4			WASHER
7	J813 1182	2			BRACKET
8	J400 5954	2			NUT
9	J027 1506	2			NUT
10	J012 0395	6			WASHER
11	J813 1181	1			CHAIN ***
12	S018 0149	2			BOLT

MODEL CODES

16=Cherokee 2 Dr.(1981-83)
17=Cherokee 2 Dr.(1981-83)
73=Cherokee 2WD-2 Dr.(1984-86)
74=Cherokee 2WD-4 Dr.(1984-86)
18=Cherokee 4 Dr.(1981-83)
77=Cherokee 4WD-2 Dr.(1984-86)
78=Cherokee 4WD-4 Dr.(1984-86)
85=CJ-5 (1981-83)
86=CJ-6(1981)
87=CJ-7(1981-86)
88=CJ-8, Scrambler(1981-86)
64=Comanche 2WD-6 Ft. Box(1986)
66=Comanche 2WD-7 Ft. Box(1986)
63=Comanche 4WD-6 Ft. Box(1986)
65=Comanche 4WD-7 Ft. Box(1986)
15=Grand Wagoneer 4 Dr.(1984-86)
25=J-10 Truck 7 Ft. Box(1981-84)
26=J10 Truck 8 Ft. Box(1981-86)
27=J-20 Truck 8 Ft. Box(1981-86)
15=Wagoneer 4 Dr.(1981-83)
75=Wagoneer 4WD-4 Dr.(1984-86)

BODY
CJ=CJ-5, CJ-6, CJ-7, CJ-8, Scrambler(1981-86)
MJ=Comanche Pickup(1986)

STYLES
SJ=Wagoneer(1981-83), Grand Wagoneer(1984-86), Cherokee(1981-83), J-10, J-20(1981-86)
XJ=Wagoneer(1984-86), Cherokee(1984-86)

AR = Use as Required - = Non Illustrated Part P.A.R. = Paint as Required

« RETURN TO GROUP INDEX

BUMPER, REAR DRAW BAR, PINTLE HOOK, TOWING EYES CJ
Figure 13-500

81J13 500

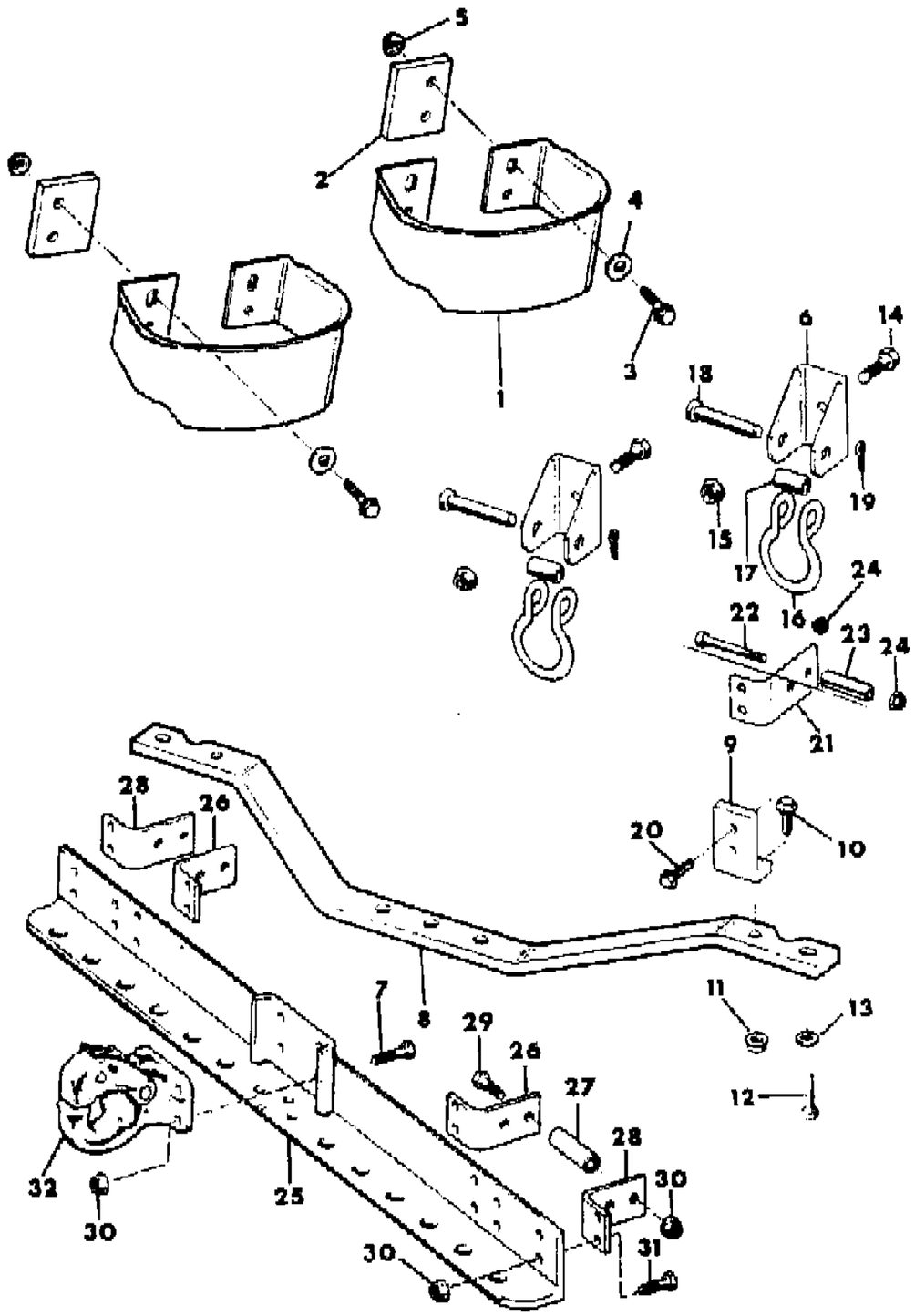

ITEM	PART NUMBER	QTY	BODY	MODEL	DESCRIPTION
1					BUMPERETTE, Rear ***
	J535 5457	2			Black
	J535 9717	2			Chrome
	J536 5065	2			Black, EXPORT, Economic Commission of Europe
	J536 5064	2			Chrome, EXPORT, Economic Commission of Europe
	J536 5024	2			Black, France
	J536 5025	2			Chrome, France
2	J535 8680	4			SPACER
3					BOLT, .88" long
	S018 0144	8			Black
	J400 7205	8			Chrome
	J400 6825	8			France
4	J400 6695	8			WASHER
5					NUT
	J400 6810	8			Hex
	J400 4175	4			Push
	J400 3956	8			Hex, France
6	J813 1740	2			BRACKET
7	J941 9079	4			BOLT
8	J535 8679	1			BAR, Draw, Without Pintle Hook
9	J535 8681	2			BRACKET
10	S941 9105	4			BOLT
11	J400 5098	4			NUT
12	J400 5824	2			BOLT
13	J400 1120	2			WASHER
14					BOLT
	J941 9105	4			1/2-13x2.00
	J941 9079	4			7/16-14x1.75
15					NUT
	J400 5098	4			1/2-13
	J400 3956	4			7/16-14
16	J813 1743	2			EYE, Towing ***
17	J813 1742	2			SPACER
18	J813 1741	2			PIN
19	S018 7988	2			PIN
20					BOLT
	S942 3533	8			1.50" Long, Phosphate
	J400 7211	8			1.50" Long, Chrome
21					BRACKET

MODEL CODES

16=Cherokee 2 Dr.(1981-83)	78=Cherokee 4WD-4 Dr.(1984-86)	64=Comanche 2WD-6 Ft. Box(1986)	25=J-10 Truck 7 Ft. Box(1981-84)
17=Cherokee 2 Dr.(1981-83)	85=CJ-5 (1981-83)	66=Comanche 2WD-7 Ft. Box(1986)	26=J10 Truck 8 Ft. Box(1981-86)
73=Cherokee 2WD-2 Dr.(1984-86)	86=CJ-6(1981)	63=Comanche 4WD-6 Ft. Box(1986)	27=J-20 Truck 8 Ft. Box(1981-86)
74=Cherokee 2WD-4 Dr.(1984-86)	87=CJ-7(1981-86)	65=Comanche 4WD-7 Ft. Box(1986)	15=Wagoneer 4 Dr.(1981-83)
18=Cherokee 4 Dr.(1981-83)	88=CJ-8, Scrambler(1981-86)	15=Grand Wagoneer 4 Dr.(1984-86)	75=Wagoneer 4WD-4 Dr.(1984-86)
77=Cherokee 4WD-2 Dr.(1984-86)			

BODY
CJ=CJ-5, CJ-6, CJ-7, CJ-8, Scrambler(1981-86)
MJ=Comanche Pickup(1986)

STYLES
SJ=Wagoneer(1981-83), Grand Wagoneer(1984-86), Cherokee(1981-83), J-10, J-20(1981-86)
XJ=Wagoneer(1984-86), Cherokee(1984-86)

AR = Use as Required - = Non Illustrated Part P.A.R. = Paint as Required

BUMPER, REAR DRAW BAR, PINTLE HOOK, TOWING EYES CJ
Figure 13-500

81J13 500

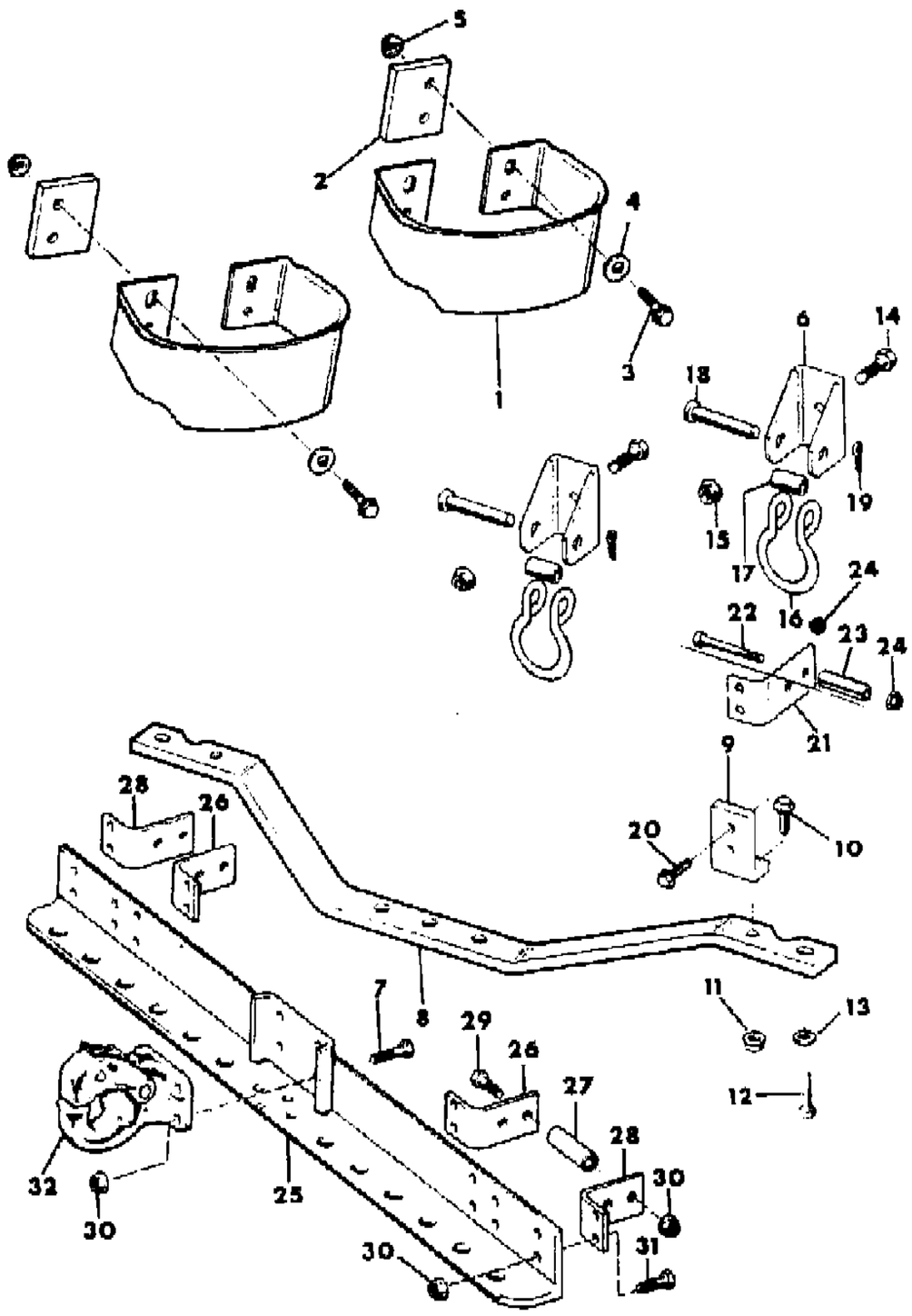

ITEM	PART NUMBER	QTY	BODY	MODEL	DESCRIPTION
	J535 6435	2			Inner
	J535 5461	2			Outer
22	J400 3967	2			BOLT, 3.75 long
23					SPACER
	J535 6497	2		85,86,8	Tube
	J535 8680	1			Square
24	J400 3956	AR			NUT
25	J535 6471	1			BAR, Draw, With Pintle Hook
26	J535 6435	2			BRACKET, Inner
27					SPACER
	J535 6497	2			Round
	J535 8680	1			Square
28	J535 5461	2			BRACKET, Outer
29	J400 3967	2			BOLT
30	J400 3956	AR			NUT
31					BOLT
	J942 3533	8			Phosphate
	J400 7211	8			Chrome
32	J096 1171	1			HOOK, Pintle

MODEL CODES

16=Cherokee 2 Dr.(1981-83)	78=Cherokee 4WD-4 Dr.(1984-86)	64=Comanche 2WD-6 Ft. Box(1986)	25=J-10 Truck 7 Ft. Box(1981-84)
17=Cherokee 2 Dr.(1981-83)	85=CJ-5 (1981-83)	66=Comanche 2WD-7 Ft. Box(1986)	26=J10 Truck 8 Ft. Box(1981-86)
73=Cherokee 2WD-2 Dr.(1984-86)	86=CJ-6(1981)	63=Comanche 4WD-6 Ft. Box(1986)	27=J-20 Truck 8 Ft. Box(1981-86)
74=Cherokee 2WD-4 Dr.(1984-86)	87=CJ-7(1981-86)	65=Comanche 4WD-7 Ft. Box(1986)	15=Wagoneer 4 Dr.(1981-83)
18=Cherokee 4 Dr.(1981-83)	88=CJ-8, Scrambler(1981-86)	15=Grand Wagoneer 4 Dr.(1984-86)	75=Wagoneer 4WD-4 Dr.(1984-86)
77=Cherokee 4WD-2 Dr.(1984-86)			

BODY
CJ=CJ-5, CJ-6, CJ-7, CJ-8, Scrambler(1981-86)
MJ=Comanche Pickup(1986)

STYLES
SJ=Wagoneer(1981-83), Grand Wagoneer(1984-86), Cherokee(1981-83), J-10, J-20(1981-86)
XJ=Wagoneer(1984-86), Cherokee(1984-86)

AR = Use as Required - = Non Illustrated Part P.A.R. = Paint as Required

« RETURN TO GROUP INDEX

BUMPER, REAR STEP SCRAMBLER
Figure 13-600

81J13 600

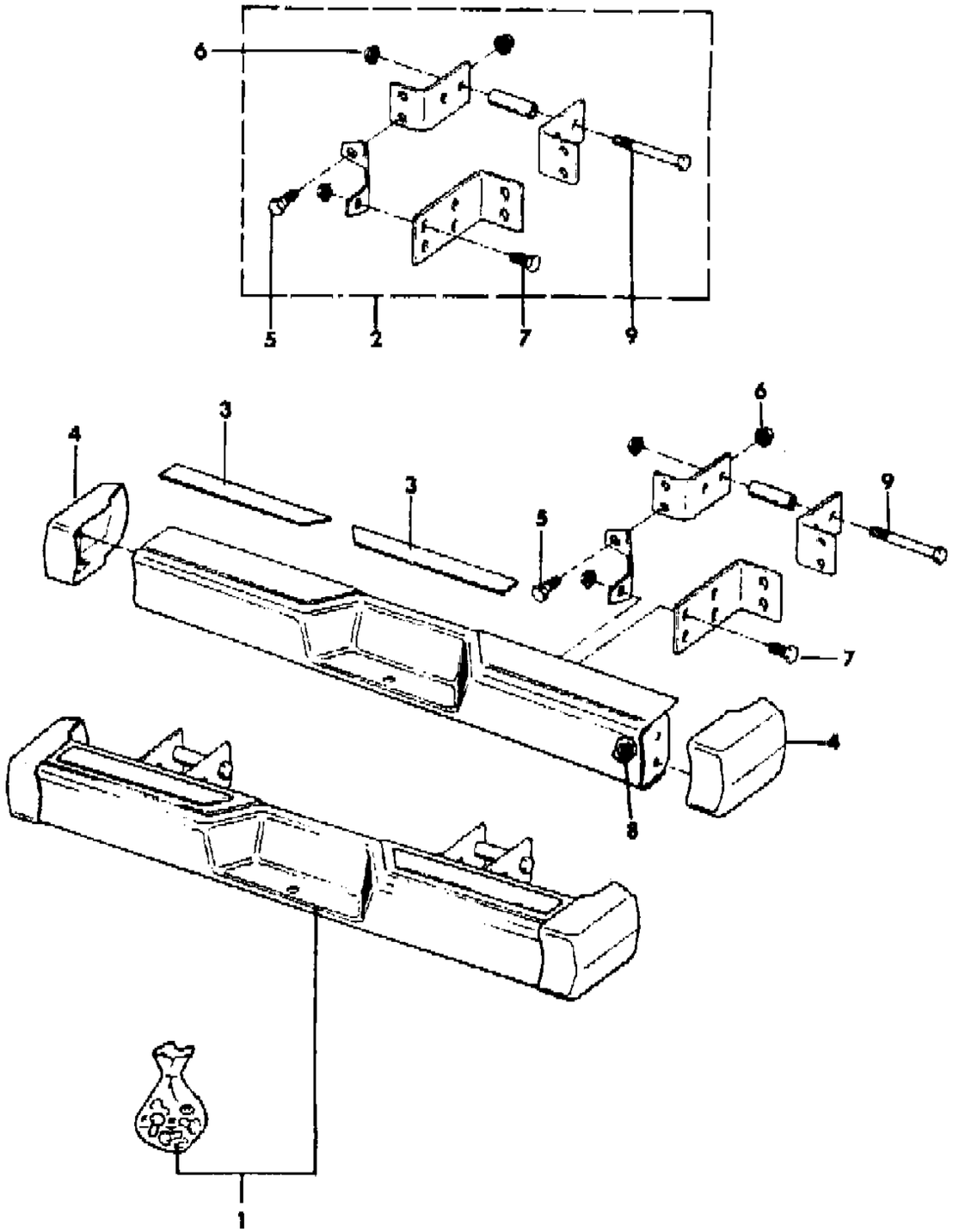

ITEM	PART NUMBER	QTY	BODY	MODEL	DESCRIPTION
1					BUMPER, Rear Step
	J210 9014	1			Black
	J210 9015	1			Chrome
2	J813 2026	2			BRACKET KIT ***
3	J536 3900-1	1			STRIP, Skid ***
4					CAP, End
	J536 3171	1			Right
	J536 3170	1			Left
5	S018 0147	AR			BOLT
6	J400 3956	AR			NUT
7	J018 0145	AR			BOLT
8	J027 1184	AR			NUT
9	J400 5986	AR			BOLT

MODEL CODES
16=Cherokee 2 Dr.(1981-83)
17=Cherokee 2 Dr.(1981-83)
73=Cherokee 2WD-2 Dr.(1984-86)
74=Cherokee 2WD-4 Dr.(1984-86)
18=Cherokee 4 Dr.(1981-83)
77=Cherokee 4WD-2 Dr.(1984-86)
78=Cherokee 4WD-4 Dr.(1984-86)
85=CJ-5 (1981-83)
86=CJ-6(1981)
87=CJ-7(1981-86)
88=CJ-8, Scrambler(1981-86)
64=Comanche 2WD-6 Ft. Box(1986)
66=Comanche 2WD-7 Ft. Box(1986)
63=Comanche 4WD-6 Ft. Box(1986)
65=Comanche 4WD-7 Ft. Box(1986)
15=Grand Wagoneer 4 Dr.(1984-86)
25=J-10 Truck 7 Ft. Box(1981-84)
26=J10 Truck 8 Ft. Box(1981-86)
27=J-20 Truck 8 Ft. Box(1981-86)
15=Wagoneer 4 Dr.(1981-83)
75=Wagoneer 4WD-4 Dr.(1984-86)

BODY
CJ=CJ-5, CJ-6, CJ-7, CJ-8, Scrambler(1981-86)
MJ=Comanche Pickup(1986)

STYLES
SJ=Wagoneer(1981-83), Grand Wagoneer(1984-86), Cherokee(1981-83), J-10, J-20(1981-86)
XJ=Wagoneer(1984-86), Cherokee(1984-86)

AR = Use as Required - = Non Illustrated Part P.A.R. = Paint as Required

« RETURN TO GROUP INDEX

WINCH CONTROLS RAMSEY 2000 OR 2001 OR 7901 CJ, SJ CHEROKEE, SJ WAGONEER, J10, J20
Figure 13-700

81J13 700

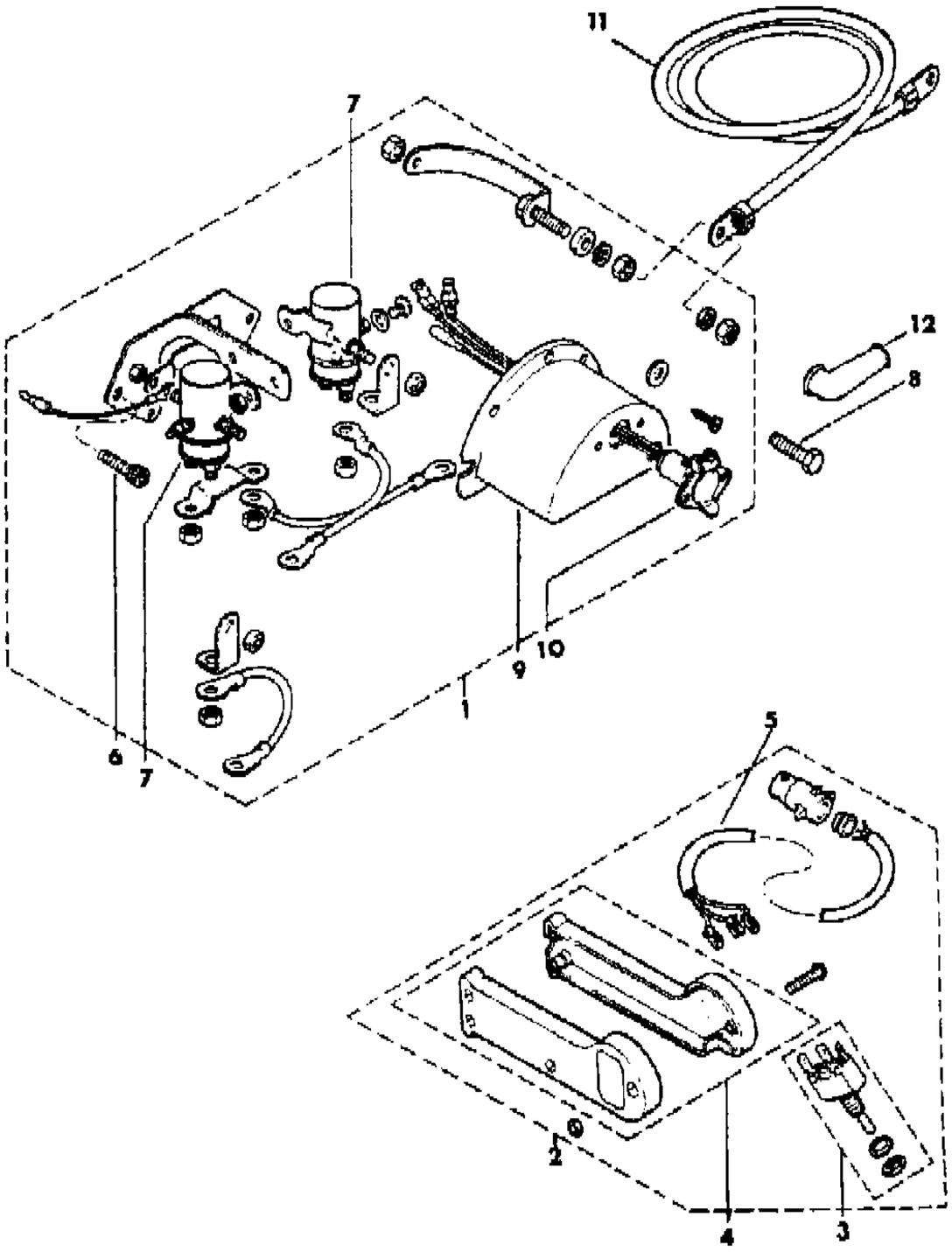

ITEM	PART NUMBER	QTY	BODY	MODEL	DESCRIPTION
1	J813 1020	1			SOLENOID ASSEMBLY, Winch ***
2	J206 2152	1			SWITCH ASSEMBLY, Winch ***
3	J205 7163	1			SWITCH
4	J813 1019	1			HANDLE
5	J813 1018	1			HARNESS, Wire
6	J813 1064	AR			BOLT
7	J206 2132	2			SOLENOID ***
8	S018 0022	AR			BOLT
9	J813 1023	1			COVER
10	J813 1022	1			CONNECTOR
11	J206 2151	1			CABLE
12	J813 1219	1			COVER

MODEL CODES

16=Cherokee 2 Dr.(1981-83)
17=Cherokee 2 Dr.(1981-83)
73=Cherokee 2WD-2 Dr.(1984-86)
74=Cherokee 2WD-4 Dr.(1984-86)
18=Cherokee 4 Dr.(1981-83)
77=Cherokee 4WD-2 Dr.(1984-86)
78=Cherokee 4WD-4 Dr.(1984-86)
85=CJ-5 (1981-83)
86=CJ-6(1981)
87=CJ-7(1981-86)
88=CJ-8, Scrambler(1981-86)
64=Comanche 2WD-6 Ft. Box(1986)
66=Comanche 2WD-7 Ft. Box(1986)
63=Comanche 4WD-6 Ft. Box(1986)
65=Comanche 4WD-7 Ft. Box(1986)
15=Grand Wagoneer 4 Dr.(1984-86)
25=J-10 Truck 7 Ft. Box(1981-84)
26=J10 Truck 8 Ft. Box(1981-86)
27=J-20 Truck 8 Ft. Box(1981-86)
15=Wagoneer 4 Dr.(1981-83)
75=Wagoneer 4WD-4 Dr.(1984-86)

BODY
CJ=CJ-5, CJ-6, CJ-7, CJ-8, Scrambler(1981-86)
MJ=Comanche Pickup(1986)

STYLES
SJ=Wagoneer(1981-83), Grand Wagoneer(1984-86), Cherokee(1981-83), J-10, J-20(1981-86)
XJ=Wagoneer(1984-86), Cherokee(1984-86)

AR = Use as Required - = Non Illustrated Part P.A.R. = Paint as Required

« RETURN TO GROUP INDEX

WINCH MOUNTING, REGULAR RAMSEY 2000 OR 2001 CJ
Figure 13-800

81J13 800

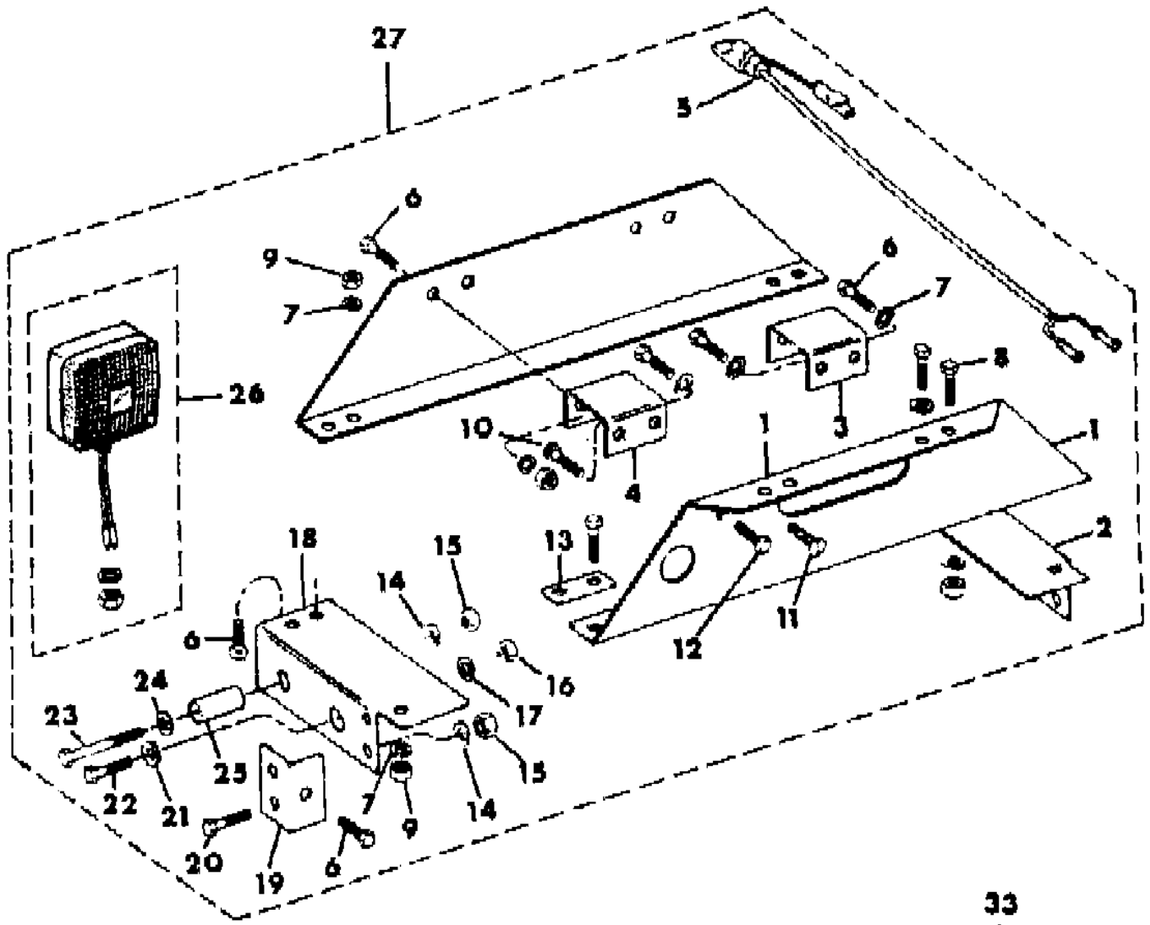

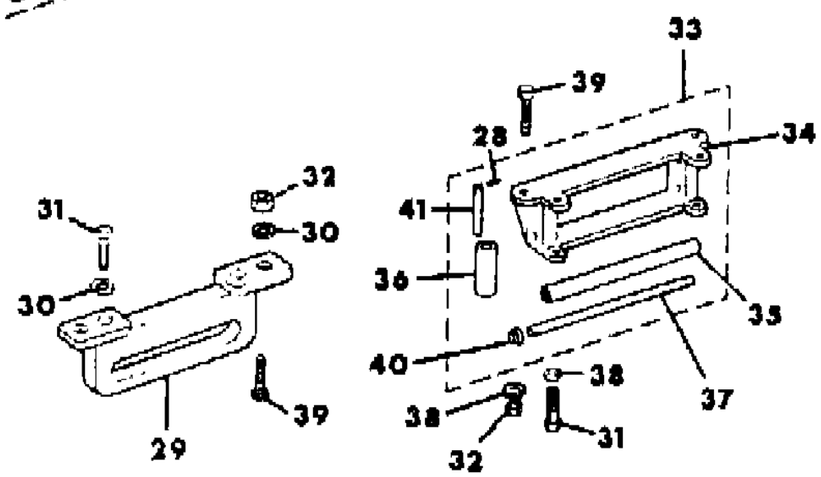

ITEM	PART NUMBER	QTY	BODY	MODEL	DESCRIPTION
1					BRACKET, Mounting
	J813 1038	1			Right
	J813 1037	1			Left
2	J813 1035	2			BRACKET
3	J813 1062	1			BRACKET
4	J813 1063	1			BRACKET
5	J813 1045	2			WIRE
6	J018 0122	AR			BOLT
7	J012 0382	AR			WASHER, Lock
8	S018 0124	AR			BOLT
9	J012 0377	AR			NUT
10	J813 1033	4			BOLT
11	J813 1034	AR			SCREW
12	J018 0120	AR			BOLT
13	J813 1040	4			BRACKET
14	S012 0384	AR			WASHER, Lock
15	S012 0378	AR			NUT
16	S022 0086	AR			NUT
17	S013 1046	AR			WASHER
18	J813 1036	2			BRACKET, Mounting
19	J813 1039	AR			BRACKET
20	J018 0173	AR			BOLT
21	S013 1017	AR			WASHER
22	S027 1767	2			BOLT
23	S018 0192	2			BOLT
24	J012 0396	AR			WASHER
25	J813 1044	AR			SPACER
26	J813 1043	2			LAMP, Park/Turn
27	J206 1506	1			MOUNTING PACKAGE, Winch ***
28	J813 1017	AR			PIN
29	J813 1011	1			GUIDE, Cable
30	J012 0382	2			WASHER, Lock
31	J018 0122	AR			BOLT
32	J012 0377	AR			NUT
33	J813 1177	1			GUIDE, Cable
34	J813 1012	1			FRAME
35	J813 1015	2			ROLLER
36	J813 1016	2			ROLLER
37	J813 1013	1			PIN

MODEL CODES

16=Cherokee 2 Dr.(1981-83)
17=Cherokee 2 Dr.(1981-83)
73=Cherokee 2WD-2 Dr.(1984-86)
74=Cherokee 2WD-4 Dr.(1984-86)
18=Cherokee 4 Dr.(1981-83)
77=Cherokee 4WD-2 Dr.(1984-86)
78=Cherokee 4WD-4 Dr.(1984-86)
85=CJ-5 (1981-83)
86=CJ-6(1981)
87=CJ-7(1981-86)
88=CJ-8, Scrambler(1981-86)
64=Comanche 2WD-6 Ft. Box(1986)
66=Comanche 2WD-7 Ft. Box(1986)
63=Comanche 4WD-6 Ft. Box(1986)
65=Comanche 4WD-7 Ft. Box(1986)
15=Grand Wagoneer 4 Dr.(1984-86)
25=J-10 Truck 7 Ft. Box(1981-84)
26=J10 Truck 8 Ft. Box(1981-86)
27=J-20 Truck 8 Ft. Box(1981-86)
15=Wagoneer 4 Dr.(1981-83)
75=Wagoneer 4WD-4 Dr.(1984-86)

BODY
CJ=CJ-5, CJ-6, CJ-7, CJ-8, Scrambler(1981-86)
MJ=Comanche Pickup(1986)

STYLES
SJ=Wagoneer(1981-83), Grand Wagoneer(1984-86), Cherokee(1981-83), J-10, J-20(1981-86)
XJ=Wagoneer(1984-86), Cherokee(1984-86)

AR = Use as Required - = Non Illustrated Part P.A.R. = Paint as Required

WINCH MOUNTING, REGULAR RAMSEY 2000 OR 2001 CJ
Figure 13-800

81J13 800

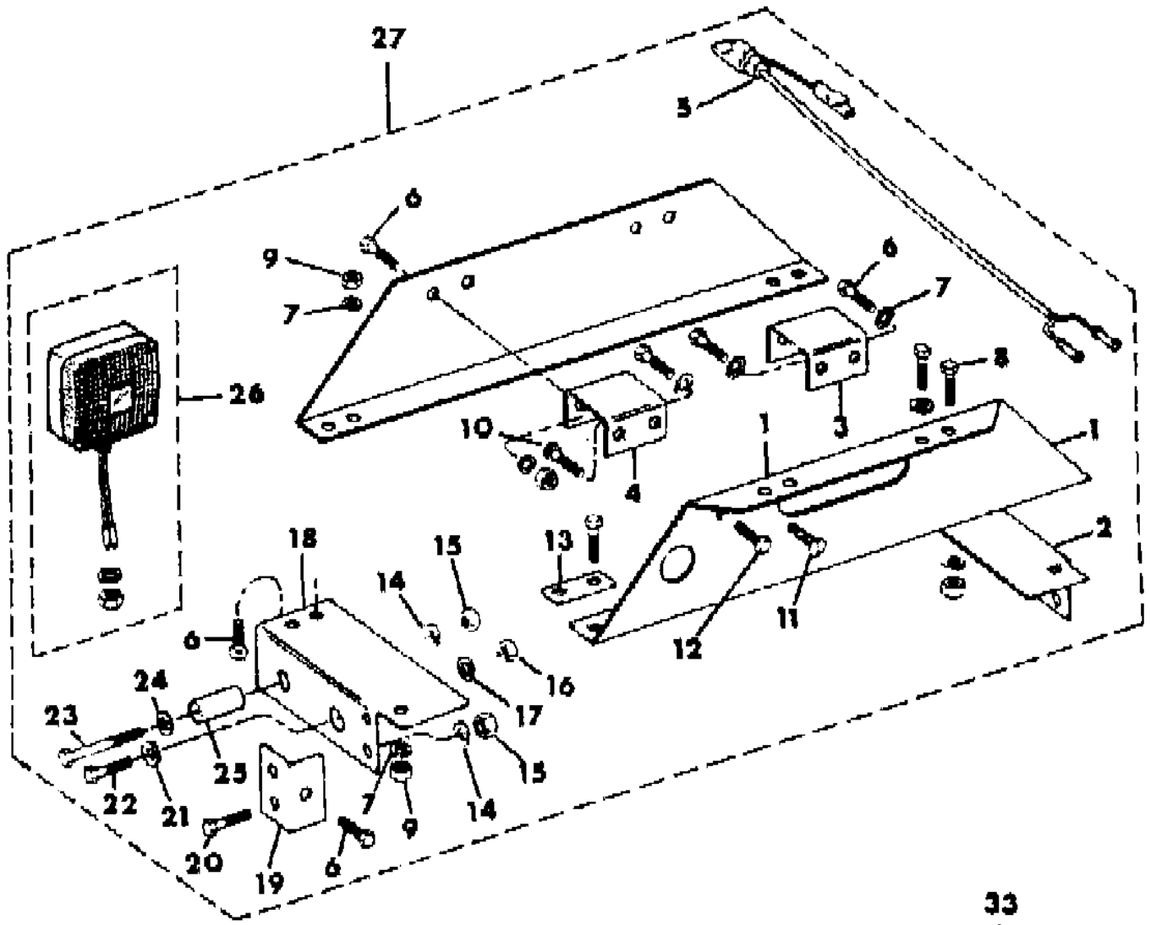

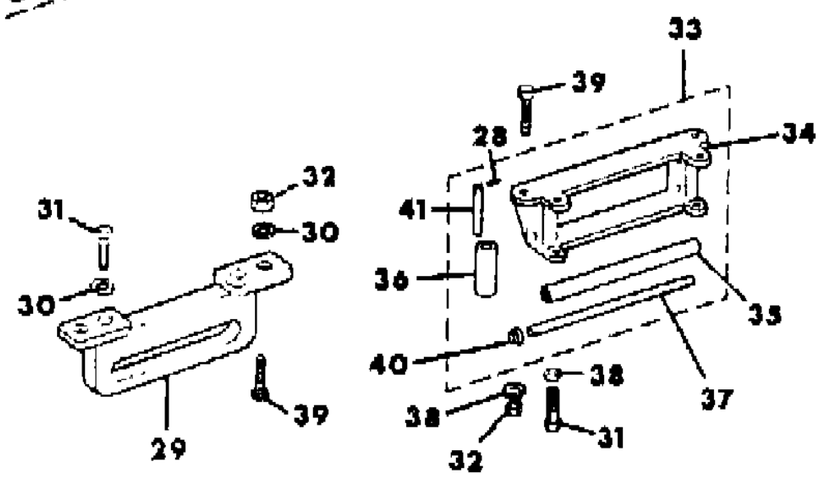

ITEM	PART NUMBER	QTY	BODY	MODEL	DESCRIPTION
38	J012 0382	AR			WASHER, Lock
39	J018 0124	AR			BOLT
40	J813 1021	AR			CAP
41	J813 1014	2			PIN

MODEL CODES

16=Cherokee 2 Dr.(1981-83)	78=Cherokee 4WD-4 Dr.(1984-86)	64=Comanche 2WD-6 Ft. Box(1986)	25=J-10 Truck 7 Ft. Box(1981-84)
17=Cherokee 2 Dr.(1981-83)	85=CJ-5 (1981-83)	66=Comanche 2WD-7 Ft. Box(1986)	26=J10 Truck 8 Ft. Box(1981-86)
73=Cherokee 2WD-2 Dr.(1984-86)	86=CJ-6(1981)	63=Comanche 4WD-6 Ft. Box(1986)	27=J-20 Truck 8 Ft. Box(1981-86)
74=Cherokee 2WD-4 Dr.(1984-86)	87=CJ-7(1981-86)	65=Comanche 4WD-7 Ft. Box(1986)	15=Wagoneer 4 Dr.(1981-83)
18=Cherokee 4 Dr.(1981-83)	88=CJ-8, Scrambler(1981-86)	15=Grand Wagoneer 4 Dr.(1984-86)	75=Wagoneer 4WD-4 Dr.(1984-86)
77=Cherokee 4WD-2 Dr.(1984-86)			

BODY
CJ=CJ-5, CJ-6, CJ-7, CJ-8, Scrambler(1981-86)
MJ=Comanche Pickup(1986)

STYLES
SJ=Wagoneer(1981-83), Grand Wagoneer(1984-86), Cherokee(1981-83), J-10, J-20(1981-86)
XJ=Wagoneer(1984-86), Cherokee(1984-86)

AR = Use as Required - = Non Illustrated Part P.A.R. = Paint as Required

« RETURN TO GROUP INDEX

WINCH MOUNTING, LIGHTWEIGHT RAMSEY 2000 OR 2001 CJ
Figure 13-900

81J13 900

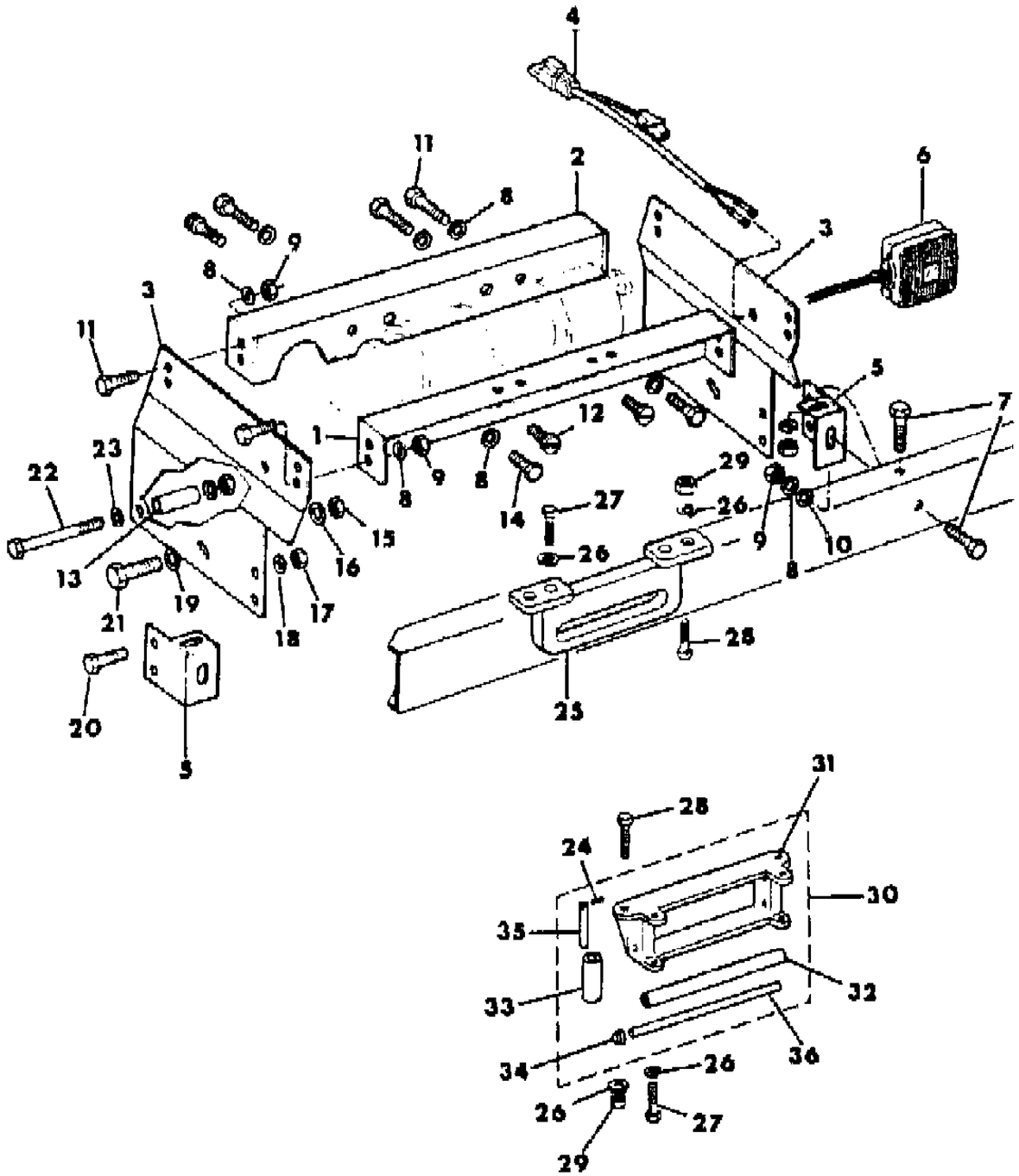

ITEM	PART NUMBER	QTY	BODY	MODEL	DESCRIPTION
1	J813 1169	1			BAR
2	J813 1174	1			BAR
3	J813 1172-3	1			BRACKET
4	J813 1045	2			WIRE
5	J813 1170-1	1			BRACKET
6	J813 1043	2			LAMP, Park/Turn
7	S018 0124	AR			BOLT
8	J012 0382	AR			WASHER, Lock
9	J012 0377	AR			NUT
10	J012 0394	AR			WASHER
11	J018 0122	AR			BOLT
12	J813 1034	AR			BOLT
13	J813 1044	AR			SPACER
14	J018 0120	AR			BOLT
15	S022 0086	AR			NUT
16	S013 1046	AR			WASHER
17	S012 0378	AR			NUT
18	S012 0384	AR			WASHER
19	S013 1017	AR			WASHER
20	J018 0173	AR			BOLT
21	S027 1767	AR			BOLT
22	S018 0192	AR			BOLT
23	J012 0396	AR			WASHER
24	J813 1017	AR			PIN
25	J813 1011	1			GUIDE, Cable
26	J012 0382	AR			WASHER, Lock
27	J018 0122	AR			BOLT
28	J018 0124	1			BOLT
29	J012 0377	AR			NUT
30	J813 1177	1			GUIDE, Cable
31	J813 1012	1			FRAME
32	J813 1015	2			ROLLER
33	J813 1016	2			ROLLER
34	J813 1021	AR			CAP
35	J813 1014	2			PIN
36	J813 1013	2			PIN

MODEL CODES
16=Cherokee 2 Dr.(1981-83)
17=Cherokee 2 Dr.(1981-83)
73=Cherokee 2WD-2 Dr.(1984-86)
74=Cherokee 2WD-4 Dr.(1984-86)
18=Cherokee 4 Dr.(1981-83)
77=Cherokee 4WD-2 Dr.(1984-86)
78=Cherokee 4WD-4 Dr.(1984-86)
85=CJ-5 (1981-83)
86=CJ-6(1981)
87=CJ-7(1981-86)
88=CJ-8, Scrambler(1981-86)
64=Comanche 2WD-6 Ft. Box(1986)
66=Comanche 2WD-7 Ft. Box(1986)
63=Comanche 4WD-6 Ft. Box(1986)
65=Comanche 4WD-7 Ft. Box(1986)
15=Grand Wagoneer 4 Dr.(1984-86)
25=J-10 Truck 7 Ft. Box(1981-84)
26=J10 Truck 8 Ft. Box(1981-86)
27=J-20 Truck 8 Ft. Box(1981-86)
15=Wagoneer 4 Dr.(1981-83)
75=Wagoneer 4WD-4 Dr.(1984-86)

BODY
CJ=CJ-5, CJ-6, CJ-7, CJ-8, Scrambler(1981-86)
MJ=Comanche Pickup(1986)

STYLES
SJ=Wagoneer(1981-83), Grand Wagoneer(1984-86), Cherokee(1981-83), J-10, J-20(1981-86)
XJ=Wagoneer(1984-86), Cherokee(1984-86)

AR = Use as Required - = Non Illustrated Part P.A.R. = Paint as Required

« RETURN TO GROUP INDEX

WINCH MOTOR AND DRUM RAMSEY, 2000 OR 2001 CJ, SJ CHEROKEE, SJ WAGONEER, J10, J20
Figure 13-1000

81J13 1000

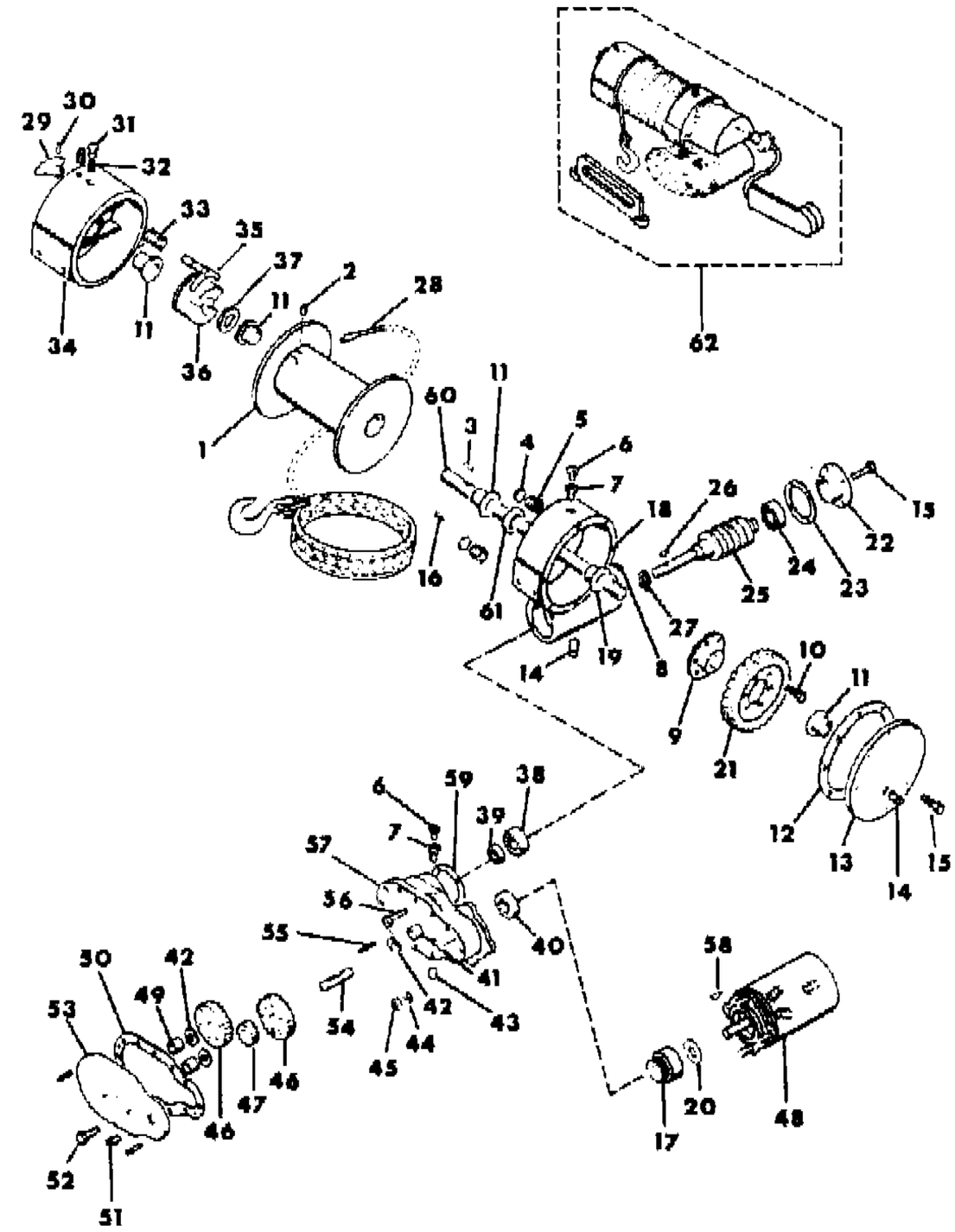

ITEM	PART NUMBER	QTY	BODY	MODEL	DESCRIPTION
1	J205 1455	1			DRUM, Cable ***
2	J205 1019	1			PLUG
3	J813 1191	1			KEY
4	J205 1100	1			CAP
5	J205 1102	1			SPRING
6	J205 1247	1			PLUG
7	J011 9923	1			SCREW
8	J205 1097	2			KEY
9	J205 1048	1			HUB ***
10	J018 0077	AR			BOLT
11	J813 1195	1			BUSHING
12	J205 1067	1			GASKET
13	J813 1186	1			COVER
14	J010 3867	3			PLUG
15	J018 0020	AR			BOLT
16	J813 1191	2			KEY
17	J812 9999	1			GEAR ***
18	J813 1000	1			HOUSING
19	J813 1194	1			BUSHING
20	J813 1007	1			WASHER
21	J205 1056	1			GEAR ***
22	J813 1184	1			CAP
23	J205 1104	1			GASKET
24	J205 1099	1			BEARING
25	J813 1192	1			GEAR ***
26	J813 1197	1			KEY
27	J206 2126	1			RING, Snap
28	J205 1436	1			CABLE, Tow
29	J813 1188	1			HANDLE
30	J813 1198	1			PIN
31	J813 1199	1			PLUG
32	J813 1196	1			SCREW
33	J813 1200	1			SPRING
34	J813 1190	1			HOUSING
35	J813 1183	1			SHIFTER ***
36	J813 1185	1			CLUTCH ***
37	J813 1189	1			SPACER
38	J205 1099	1			BEARING
39	J205 1103	1			SEAL

MODEL CODES

16=Cherokee 2 Dr.(1981-83)
17=Cherokee 2 Dr.(1981-83)
73=Cherokee 2WD-2 Dr.(1984-86)
74=Cherokee 2WD-4 Dr.(1984-86)
18=Cherokee 4 Dr.(1981-83)
77=Cherokee 4WD-2 Dr.(1984-86)
78=Cherokee 4WD-4 Dr.(1984-86)
85=CJ-5 (1981-83)
86=CJ-6(1981)
87=CJ-7(1981-86)
88=CJ-8, Scrambler(1981-86)
64=Comanche 2WD-6 Ft. Box(1986)
66=Comanche 2WD-7 Ft. Box(1986)
63=Comanche 4WD-6 Ft. Box(1986)
65=Comanche 4WD-7 Ft. Box(1986)
15=Grand Wagoneer 4 Dr.(1984-86)
25=J-10 Truck 7 Ft. Box(1981-84)
26=J10 Truck 8 Ft. Box(1981-86)
27=J-20 Truck 8 Ft. Box(1981-86)
15=Wagoneer 4 Dr.(1981-83)
75=Wagoneer 4WD-4 Dr.(1984-86)

BODY
CJ=CJ-5, CJ-6, CJ-7, CJ-8, Scrambler(1981-86)
MJ=Comanche Pickup(1986)

STYLES
SJ=Wagoneer(1981-83), Grand Wagoneer(1984-86), Cherokee(1981-83), J-10, J-20(1981-86)
XJ=Wagoneer(1984-86), Cherokee(1984-86)

AR = Use as Required - = Non Illustrated Part P.A.R. = Paint as Required

« RETURN TO GROUP INDEX »

WINCH MOTOR AND DRUM RAMSEY, 2000 OR 2001 CJ, SJ CHEROKEE, SJ WAGONEER, J10, J20
Figure 13-1000

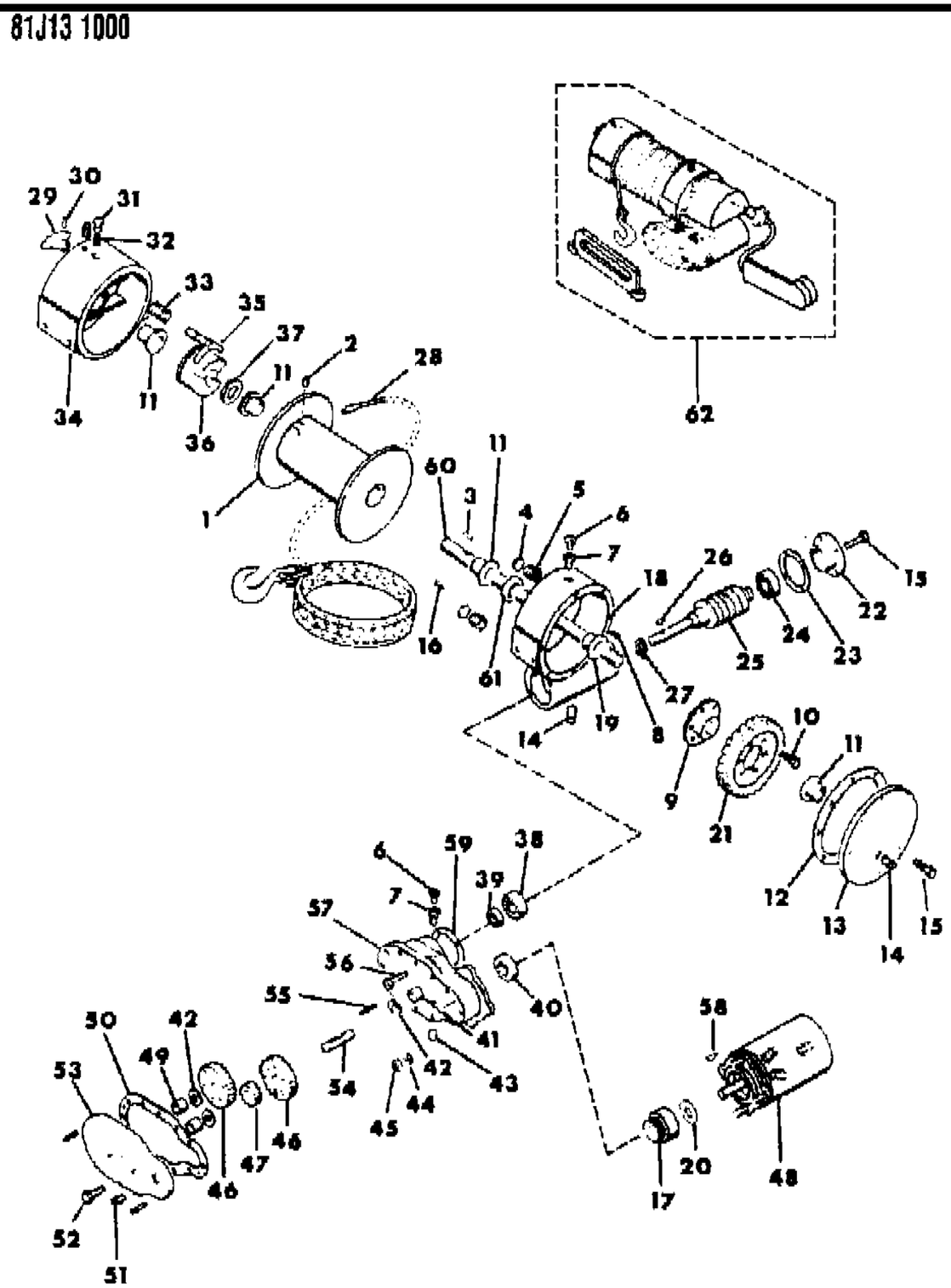

ITEM	PART NUMBER	QTY	BODY	MODEL	DESCRIPTION
40	J813 1008	1			SEAL
41	J813 1193	2			BUSHING
42	J205 7017	1			WASHER
43	J010 3867	1			SCREW
44	J012 0382	AR			WASHER
45	J012 0369	AR			NUT
46	J206 2114	2			GEAR ***
47	J206 2112	1			GEAR ***
48	J206 2124	1			MOTOR
49	J813 1193	2			BUSHING
50	J206 2119	1			GASKET
51	J205 1322	1			PLUG
52	J813 1018	AR			BOLT
53	J813 1187	1			COVER
54	J206 2111	1			SHAFT
55	J206 2136	1			KEY
56	J813 1069	1			BOLT
57	J813 1001	1			HOUSING
58	J813 1003	1			KEY
59	J205 1004				GASKET
60	J813 1168	1			SHAFT
61	J813 1010	1			SEAL
62					WINCH ***
	J206 1019	1			Model 2000
	J206 1020	1			Model 2001
					Winch Assemblies Include:
					A. Solenoid Assembly J8131020
					B. Switch Assembly J2062152
					C. Handle J8131019
					D. Connector Assembly J8131022
					E. Fairlead Assembly

MODEL CODES

16=Cherokee 2 Dr.(1981-83)
17=Cherokee 2 Dr.(1981-83)
73=Cherokee 2WD-2 Dr.(1984-86)
74=Cherokee 2WD-4 Dr.(1984-86)
18=Cherokee 4 Dr.(1981-83)
77=Cherokee 4WD-2 Dr.(1984-86)
78=Cherokee 4WD-4 Dr.(1984-86)
85=CJ-5 (1981-83)
86=CJ-6(1981)
87=CJ-7(1981-86)
88=CJ-8, Scrambler(1981-86)
64=Comanche 2WD-6 Ft. Box(1986)
66=Comanche 2WD-7 Ft. Box(1986)
63=Comanche 4WD-6 Ft. Box(1986)
65=Comanche 4WD-7 Ft. Box(1986)
15=Grand Wagoneer 4 Dr.(1984-86)
25=J-10 Truck 7 Ft. Box(1981-84)
26=J10 Truck 8 Ft. Box(1981-86)
27=J-20 Truck 8 Ft. Box(1981-86)
15=Wagoneer 4 Dr.(1981-83)
75=Wagoneer 4WD-4 Dr.(1984-86)

BODY
CJ=CJ-5, CJ-6, CJ-7, CJ-8, Scrambler(1981-86)
MJ=Comanche Pickup(1986)

STYLES
SJ=Wagoneer(1981-83), Grand Wagoneer(1984-86), Cherokee(1981-83), J-10, J-20(1981-86)
XJ=Wagoneer(1984-86), Cherokee(1984-86)

AR = Use as Required - = Non Illustrated Part P.A.R. = Paint as Required

« RETURN TO GROUP INDEX

WINCH CONTROLS RAMSEY 6000 CJ
Figure 13-1100

81J13 1100

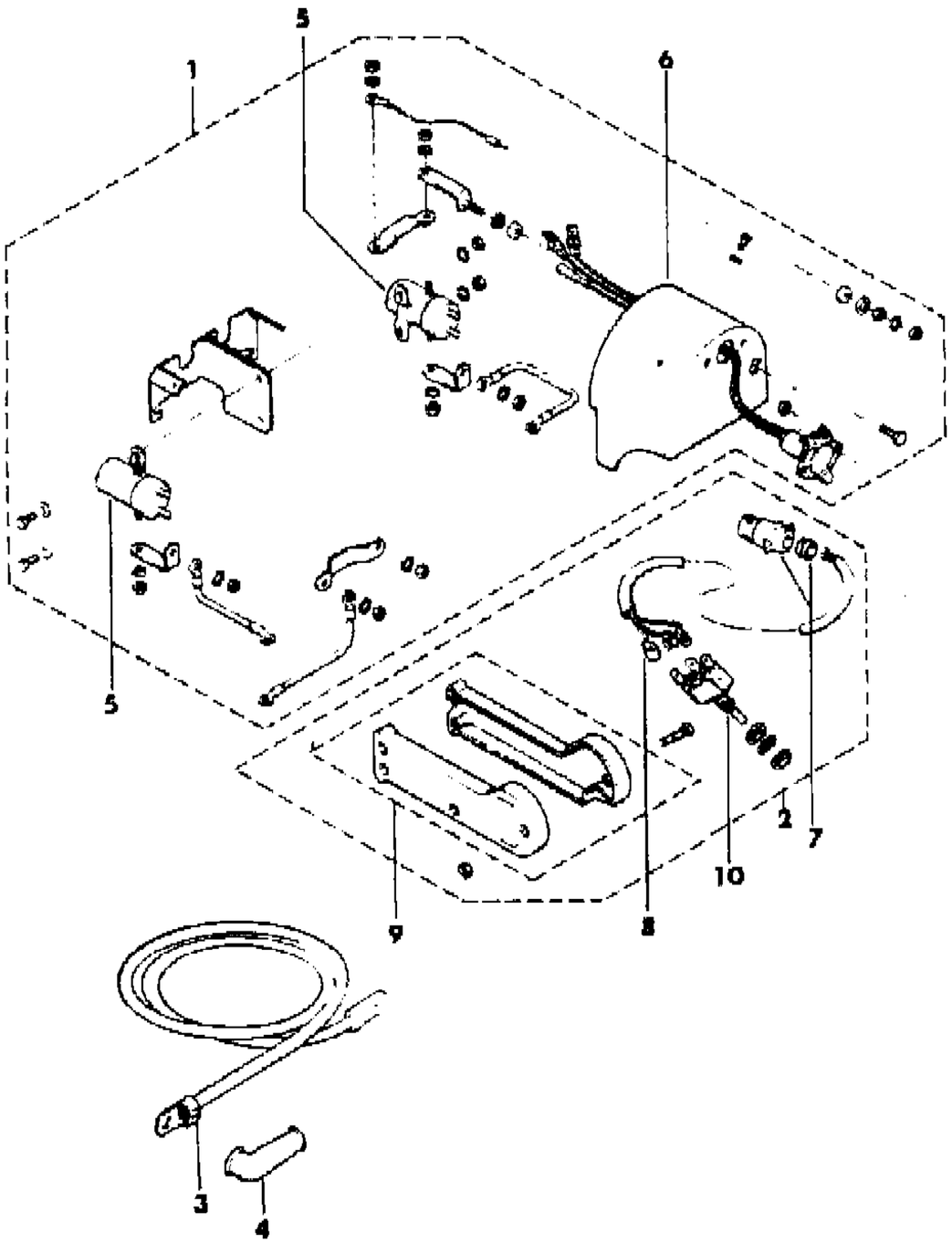

ITEM	PART NUMBER	QTY	BODY	MODEL	DESCRIPTION
1	J813 1487	1			SOLENOID ASSEMBLY, Winch ***
2	J813 1521	1			SWITCH ASSEMBLY, Winch ***
3	J206 2151	1			CABLE
4	J813 1219	1			COVER
5	J206 2132	2			SOLENOID, Winch ***
6	J813 1519	1			COVER
7	J206 2106	1			PLUG
8	J813 1018	1			HARNESS, Wire
9	J813 1019	1			HANDLE
10	J813 1520	1			SWITCH

MODEL CODES

16=Cherokee 2 Dr.(1981-83)	78=Cherokee 4WD-4 Dr.(1984-86)	64=Comanche 2WD-6 Ft. Box(1986)	25=J-10 Truck 7 Ft. Box(1981-84)
17=Cherokee 2 Dr.(1981-83)	85=CJ-5 (1981-83)	66=Comanche 2WD-7 Ft. Box(1986)	26=J10 Truck 8 Ft. Box(1981-86)
73=Cherokee 2WD-2 Dr.(1984-86)	86=CJ-6(1981)	63=Comanche 4WD-6 Ft. Box(1986)	27=J-20 Truck 8 Ft. Box(1981-86)
74=Cherokee 2WD-4 Dr.(1984-86)	87=CJ-7(1981-86)	65=Comanche 4WD-7 Ft. Box(1986)	15=Wagoneer 4 Dr.(1981-83)
18=Cherokee 4 Dr.(1981-83)	88=CJ-8, Scrambler(1981-86)	15=Grand Wagoneer 4 Dr.(1984-86)	75=Wagoneer 4WD-4 Dr.(1984-86)
77=Cherokee 4WD-2 Dr.(1984-86)			

BODY
CJ=CJ-5, CJ-6, CJ-7, CJ-8, Scrambler(1981-86)
MJ=Comanche Pickup(1986)

STYLES
SJ=Wagoneer(1981-83), Grand Wagoneer(1984-86), Cherokee(1981-83), J-10, J-20(1981-86)
XJ=Wagoneer(1984-86), Cherokee(1984-86)

AR = Use as Required - = Non Illustrated Part P.A.R. = Paint as Required

« RETURN TO GROUP INDEX

WINCH MOUNTING RAMSEY 6000 CJ
Figure 13-1200

81J13 1200

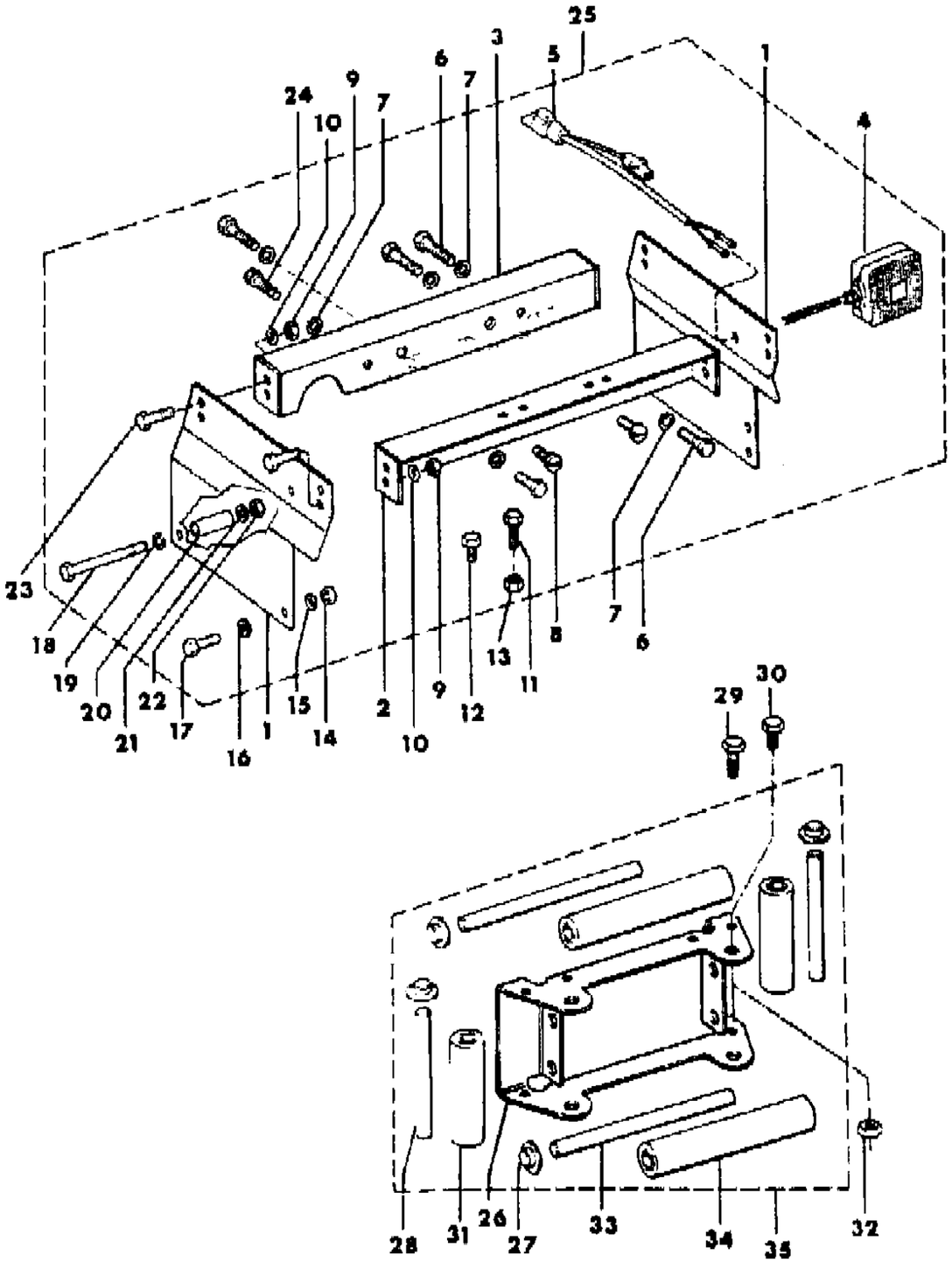

ITEM	PART NUMBER	QTY	BODY	MODEL	DESCRIPTION
1	J813 4176-7	1			BRACKET
2	J813 1473	1			BAR
3	J813 1474	1			BAR
4	J813 1043	2			LAMP, Park/Turn
5	J813 1045	2			WIRE
6	J018 0077	AR			BOLT
7	J012 0214	AR			WASHER
8	J813 1479	AR			WASHER, Lock
9	J012 0377	AR			NUT
10	J012 0382	AR			WASHER, Lock
11	J018 0120	AR			BOLT
12	S018 0124	AR			BOLT
13	J813 1475	AR			NUT
14	S022 0086	AR			NUT
15	S013 1046	AR			WASHER
16	S013 1017	AR			WASHER
17	S027 1767	AR			BOLT
18	S018 0192	AR			BOLT
19	S012 0384	AR			WASHER
20	J813 1044	AR			SPACER
21	J012 0396	AR			WASHER
22	S012 0378	1			NUT
23	J018 0122	AR			BOLT
24	J813 1478	AR			BOLT
25	J206 1544	1			MOUNTING PACKAGE, Winch ***
26	J813 1480	AR			FRAME
27	J813 1021	AR			CAP
28	J813 1484	2			ROLLER
29	S018 0124	AR			BOLT
30	J018 0120	AR			BOLT
31	J813 1482	2			ROLLER
32	J813 1475	AR			NUT
33	J813 1483	2			PIN
34	J813 1481	2			ROLLER
35	J813 1485	1			GUIDE, Cable

MODEL CODES
16=Cherokee 2 Dr.(1981-83)
17=Cherokee 2 Dr.(1981-83)
73=Cherokee 2WD-2 Dr.(1984-86)
74=Cherokee 2WD-4 Dr.(1984-86)
18=Cherokee 4 Dr.(1981-83)
77=Cherokee 4WD-2 Dr.(1984-86)
78=Cherokee 4WD-4 Dr.(1984-86)
85=CJ-5 (1981-83)
86=CJ-6(1981)
87=CJ-7(1981-86)
88=CJ-8, Scrambler(1981-86)
64=Comanche 2WD-6 Ft. Box(1986)
66=Comanche 2WD-7 Ft. Box(1986)
63=Comanche 4WD-6 Ft. Box(1986)
65=Comanche 4WD-7 Ft. Box(1986)
15=Grand Wagoneer 4 Dr.(1984-86)
25=J-10 Truck 7 Ft. Box(1981-84)
26=J10 Truck 8 Ft. Box(1981-86)
27=J-20 Truck 8 Ft. Box(1981-86)
15=Wagoneer 4 Dr.(1981-83)
75=Wagoneer 4WD-4 Dr.(1984-86)

BODY
CJ=CJ-5, CJ-6, CJ-7, CJ-8, Scrambler(1981-86)
MJ=Comanche Pickup(1986)

STYLES
SJ=Wagoneer(1981-83), Grand Wagoneer(1984-86), Cherokee(1981-83), J-10, J-20(1981-86)
XJ=Wagoneer(1984-86), Cherokee(1984-86)

AR = Use as Required - = Non Illustrated Part P.A.R. = Paint as Required

« RETURN TO GROUP INDEX

WINCH MOUNTING RAMSEY 6000 CJ
Figure 13-1200

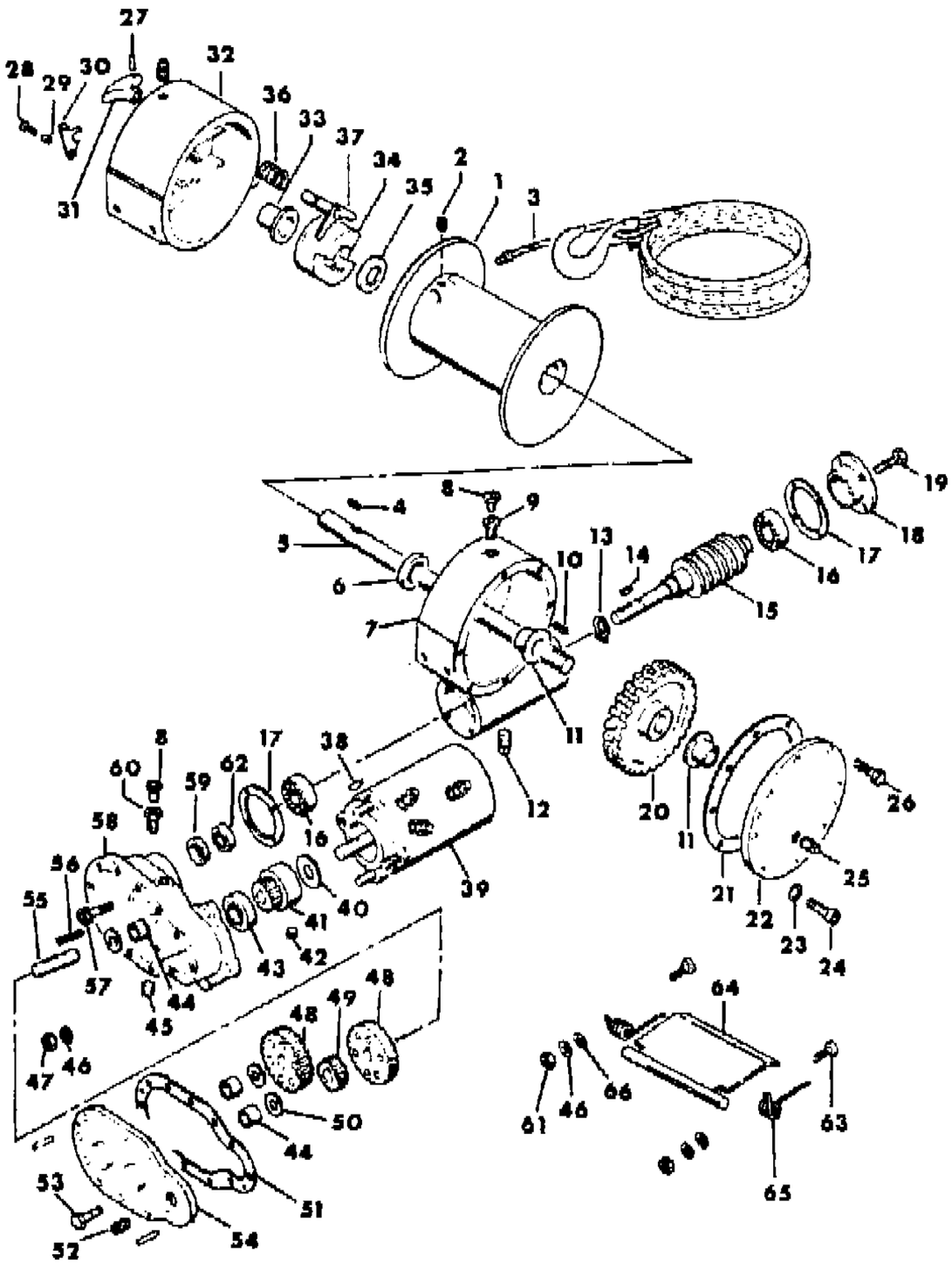

ITEM	PART NUMBER	QTY	BODY	MODEL	DESCRIPTION
1	J813 1489	1			DRUM, Cable ***
2	J813 1065	1			PLUG
3	J813 1517	1			CABLE, Tow
4	J813 1091	1			KEY
5	J813 1494	1			SHAFT
6	J813 1000	1			BUSHING
7	J813 1493	1			HOUSING
8	J205 1247	2			PLUG
9	J813 1511	1			PLUG
10	J205 1097	1			KEY
11	J813 1497	1			BUSHING
12	J813 1509	1			PLUG
13	J206 2126	1			RIING, Snap ***
14	J206 2135	1			KEY
15	J813 1495	1			SHAFT
16	J205 1099	2			BEARING
17	J205 1104	1			GASKET
18	J813 1184	1			CAP
19	J813 1500	1			BOLT
20	J813 1490	1			GEAR ***
21	J813 1507	1			GASKET
22	J813 1488	1			COVER
23	J012 0392	AR			WASHER
24	J813 1502	AR			SCREW
25	J813 1510	1			PLUG
26	J813 1499	1			SCREW
27	J813 1512	1			KEY
28	J813 1504	1			SCREW
29	J813 1496	1			BUSHING
30	J813 1508	1			BRACKET
31	J813 1491	1			HANDLE
32	J813 1492	1			HOUSING
33	J813 1194	1			BUSHING
34	J813 1185	1			CLUTCH ***
35	J813 1189	1			SPACER
36	J813 1513	1			SPRING
37	J813 1486	1			SPACER
38	J813 1003	1			KEY
39	J206 2124	1			MOTOR

MODEL CODES

16=Cherokee 2 Dr.(1981-83)
17=Cherokee 2 Dr.(1981-83)
73=Cherokee 2WD-2 Dr.(1984-86)
74=Cherokee 2WD-4 Dr.(1984-86)
18=Cherokee 4 Dr.(1981-83)
77=Cherokee 4WD-2 Dr.(1984-86)
78=Cherokee 4WD-4 Dr.(1984-86)
85=CJ-5 (1981-83)
86=CJ-6(1981)
87=CJ-7(1981-86)
88=CJ-8, Scrambler(1981-86)
64=Comanche 2WD-6 Ft. Box(1986)
66=Comanche 2WD-7 Ft. Box(1986)
63=Comanche 4WD-6 Ft. Box(1986)
65=Comanche 4WD-7 Ft. Box(1986)
15=Grand Wagoneer 4 Dr.(1984-86)
25=J-10 Truck 7 Ft. Box(1981-84)
26=J10 Truck 8 Ft. Box(1981-86)
27=J-20 Truck 8 Ft. Box(1981-86)
15=Wagoneer 4 Dr.(1981-83)
75=Wagoneer 4WD-4 Dr.(1984-86)

BODY
CJ=CJ-5, CJ-6, CJ-7, CJ-8, Scrambler(1981-86)
MJ=Comanche Pickup(1986)

STYLES
SJ=Wagoneer(1981-83), Grand Wagoneer(1984-86), Cherokee(1981-83), J-10, J-20(1981-86)
XJ=Wagoneer(1984-86), Cherokee(1984-86)

AR = Use as Required - = Non Illustrated Part P.A.R. = Paint as Required

« RETURN TO GROUP INDEX »

WINCH MOUNTING RAMSEY 6000 CJ
Figure 13-1200

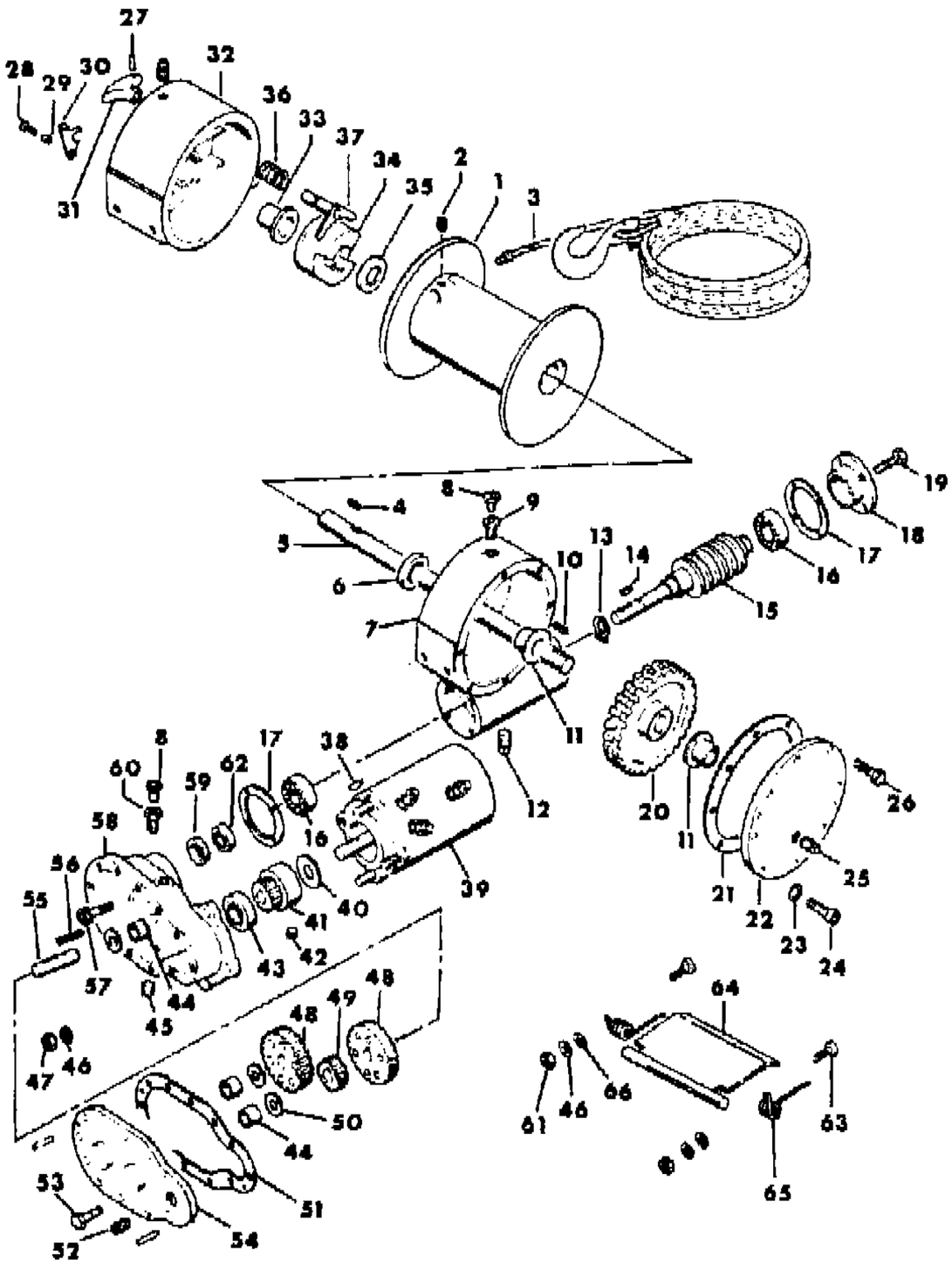

ITEM	PART NUMBER	QTY	BODY	MODEL	DESCRIPTION
40	J813 1007	1			WASHER
41	J812 9999	1			GEAR ***
42	J813 1065	1			PLUG
43	J813 1008	1			SEAL, Oil
44	J813 1193	1			BUSHING
45	J010 3867	1			PLUG
46	J012 0382	AR			WASHER, Lock
47	J813 1505	AR			NUT
48	J206 2114	2			GEAR ***
49	J206 2112	1			GEAR ***
50	J205 7017	1			WASHER
51	J206 2119	1			GASKET
52	J205 1332	1			PLUG
53	J813 1498	AR			BOLT
54	J813 1187	1			COVER
55	J206 2111	1			SHAFT
56	J206 2136	1			KEY
57	J813 1063	1			SCREW
58	J813 1001	1			HOUSING
59	J813 1516	1			BUSHING
60	J011 9923	1			PLUG
61	J012 0377	AR			NUT
62	J205 1103	1			SEAL
63	J813 1503	AR			SCREW
64	J813 1518	1			PLATE
65	J813 1514-5	1			SPRING
66	J813 1506	AR			WASHER

MODEL CODES

16=Cherokee 2 Dr.(1981-83)
17=Cherokee 2 Dr.(1981-83)
73=Cherokee 2WD-2 Dr.(1984-86)
74=Cherokee 2WD-4 Dr.(1984-86)
18=Cherokee 4 Dr.(1981-83)
77=Cherokee 4WD-2 Dr.(1984-86)
78=Cherokee 4WD-4 Dr.(1984-86)
85=CJ-5 (1981-83)
86=CJ-6(1981)
87=CJ-7(1981-86)
88=CJ-8, Scrambler(1981-86)
64=Comanche 2WD-6 Ft. Box(1986)
66=Comanche 2WD-7 Ft. Box(1986)
63=Comanche 4WD-6 Ft. Box(1986)
65=Comanche 4WD-7 Ft. Box(1986)
15=Grand Wagoneer 4 Dr.(1984-86)
25=J-10 Truck 7 Ft. Box(1981-84)
26=J10 Truck 8 Ft. Box(1981-86)
27=J-20 Truck 8 Ft. Box(1981-86)
15=Wagoneer 4 Dr.(1981-83)
75=Wagoneer 4WD-4 Dr.(1984-86)

BODY
CJ=CJ-5, CJ-6, CJ-7, CJ-8, Scrambler(1981-86)
MJ=Comanche Pickup(1986)

STYLES
SJ=Wagoneer(1981-83), Grand Wagoneer(1984-86), Cherokee(1981-83), J-10, J-20(1981-86)
XJ=Wagoneer(1984-86), Cherokee(1984-86)

AR = Use as Required - = Non Illustrated Part P.A.R. = Paint as Required

« RETURN TO GROUP INDEX

WINCH CONTROLS RAMSEY REP 6000 CJ, SJ CHEROKEE, SJ WAGONEER, J10, J20
Figure 13-1400

81J13 1400

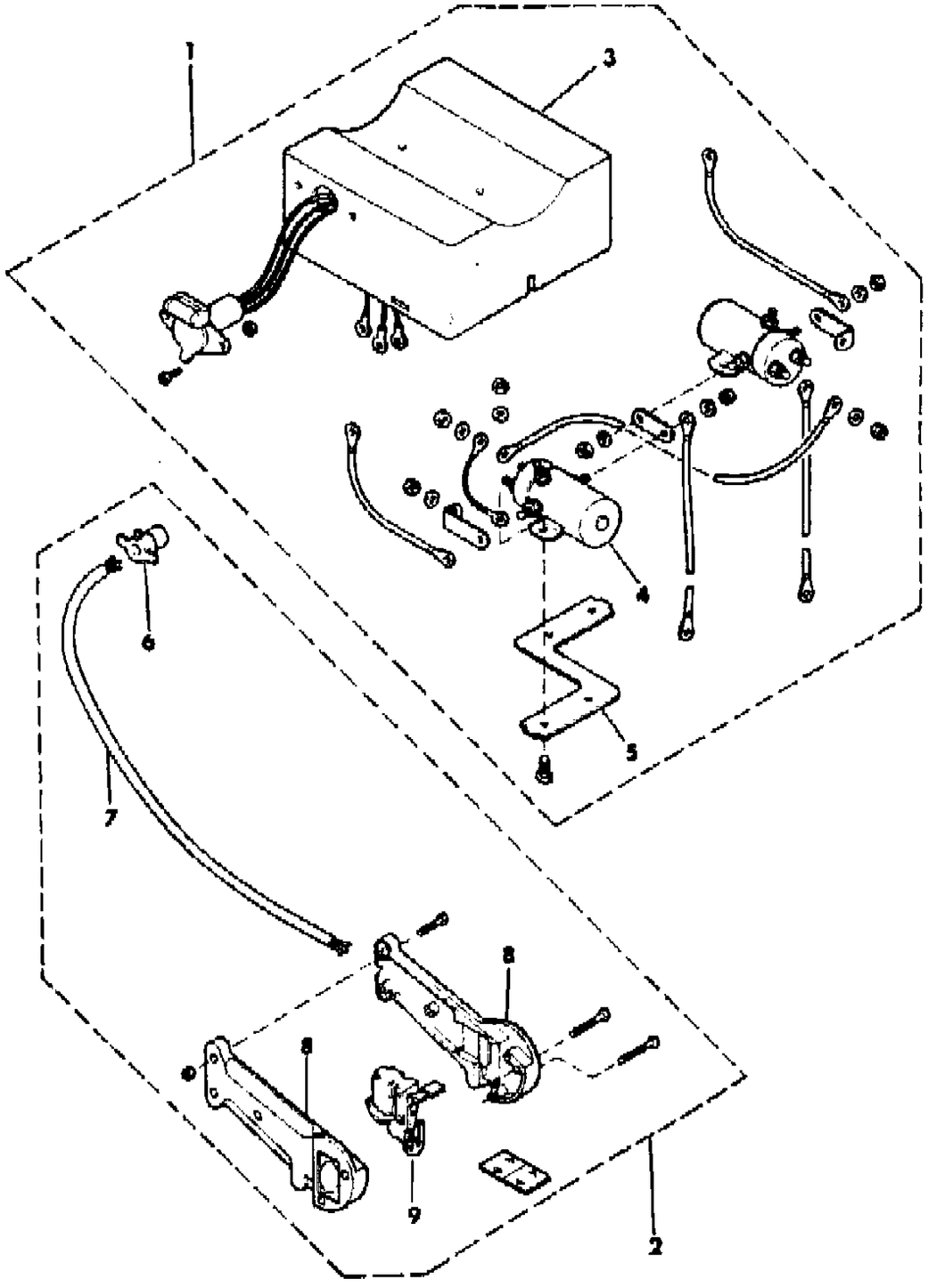

ITEM	PART NUMBER	QTY	BODY	MODEL	DESCRIPTION
1	8351 0141	1			SOLENOID ASSEMBLY, Winch ***
2	8351 0090	1			SWITCH ASSEMBLY, Winch ***
3	8351 0138	1			COVER
4	8351 0139	2			SOLENOID ***
5	8351 0140	2			BRACKET
6	8351 0148	1			CONNECTOR
7	8351 0149	1			WIRE
8	8351 0150	1			SEAT ***
9	8351 0151	1			SWITCH

MODEL CODES

16=Cherokee 2 Dr.(1981-83)	78=Cherokee 4WD-4 Dr.(1984-86)	64=Comanche 2WD-6 Ft. Box(1986)	25=J-10 Truck 7 Ft. Box(1981-84)
17=Cherokee 2 Dr.(1981-83)	85=CJ-5 (1981-83)	66=Comanche 2WD-7 Ft. Box(1986)	26=J10 Truck 8 Ft. Box(1981-86)
73=Cherokee 2WD-2 Dr.(1984-86)	86=CJ-6(1981)	63=Comanche 4WD-6 Ft. Box(1986)	27=J-20 Truck 8 Ft. Box(1981-86)
74=Cherokee 2WD-4 Dr.(1984-86)	87=CJ-7(1981-86)	65=Comanche 4WD-7 Ft. Box(1986)	15=Wagoneer 4 Dr.(1981-83)
18=Cherokee 4 Dr.(1981-83)	88=CJ-8, Scrambler(1981-86)	15=Grand Wagoneer 4 Dr.(1984-86)	75=Wagoneer 4WD-4 Dr.(1984-86)
77=Cherokee 4WD-2 Dr.(1984-86)			

BODY
CJ=CJ-5, CJ-6, CJ-7, CJ-8, Scrambler(1981-86)
MJ=Comanche Pickup(1986)

STYLES
SJ=Wagoneer(1981-83), Grand Wagoneer(1984-86), Cherokee(1981-83), J-10, J-20(1981-86)
XJ=Wagoneer(1984-86), Cherokee(1984-86)

AR = Use as Required - = Non Illustrated Part P.A.R. = Paint as Required

« RETURN TO GROUP INDEX

WINCH MOUNTING RAMSEY REP 6000 CJ
Figure 13-1500

81J13 1500

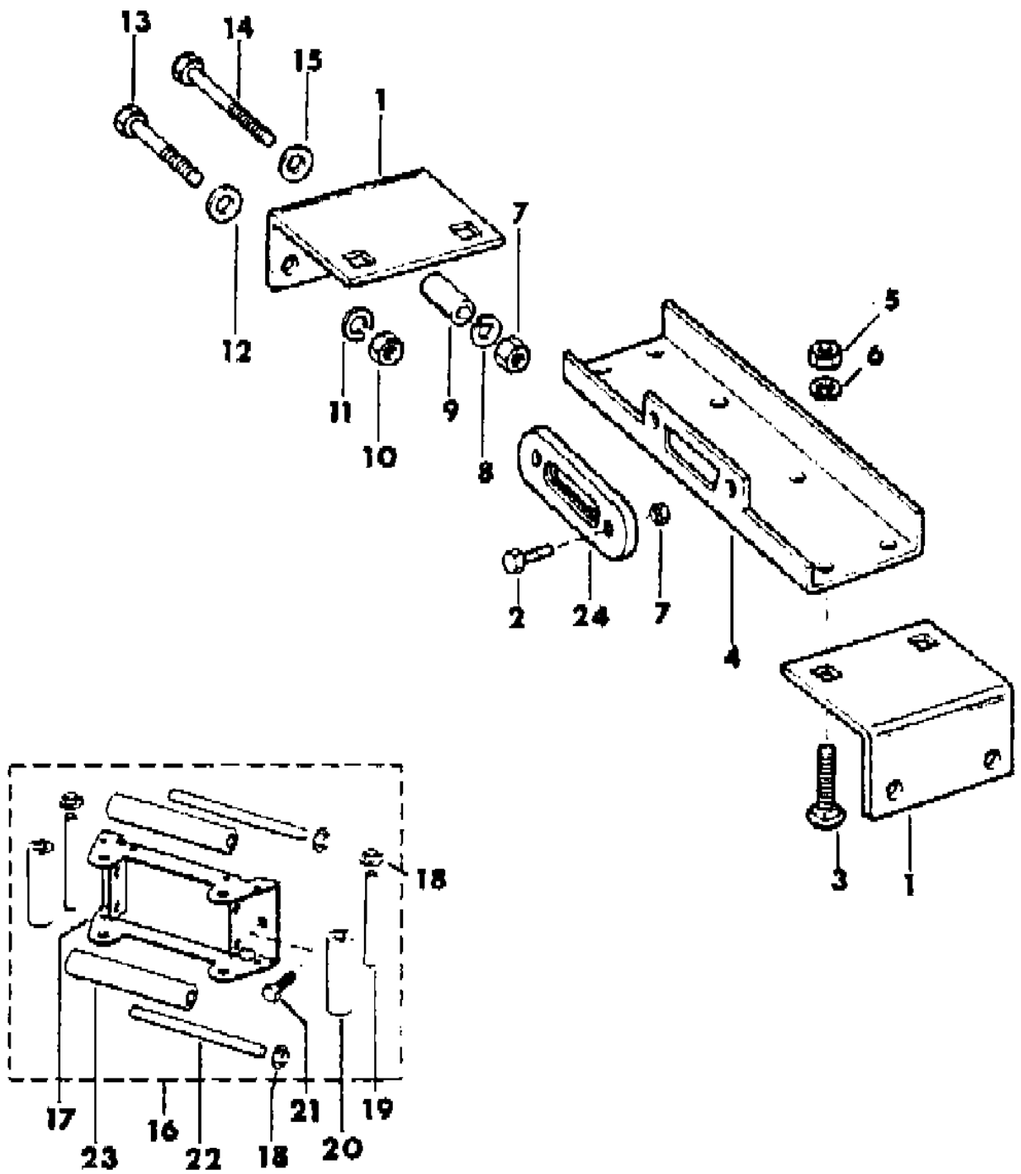

ITEM	PART NUMBER	QTY	BODY	MODEL	DESCRIPTION
1	8351 0152-3	1			BRACKET
2	8351 0147	2			BOLT
3	8351 0156	AR			BOLT
4	8351 0155	1			BRACKET
5	J012 0377	AR			NUT
6	J012 0382	AR			WASHER, Lock
7	S012 0378	AR			NUT
8	S012 0384	AR			WASHER
9	8351 0154	1			SPACER
10	S022 0286	AR			NUT
11	S013 1046	AR			WASHER
12	S013 1017	AR			WASHER
13	S027 1767	AR			BOLT
14	S018 0192	AR			BOLT
15	J012 0396	AR			WASHER
16	8351 0142	1			GUIDE, Cable
17	8351 0144	1			FRAME
18	J813 1021	AR			CAP
19	J813 1484	2			PIN
20	J813 1482	2			ROLLER
21	8351 0145	2			BOLT
22	8351 0143	2			PIN
23	J813 1015	2			ROLLER
24	8351 0146	1			GUIDE, Cable

MODEL CODES

16=Cherokee 2 Dr.(1981-83)
17=Cherokee 2 Dr.(1981-83)
73=Cherokee 2WD-2 Dr.(1984-86)
74=Cherokee 2WD-4 Dr.(1984-86)
18=Cherokee 4 Dr.(1981-83)
77=Cherokee 4WD-2 Dr.(1984-86)
78=Cherokee 4WD-4 Dr.(1984-86)
85=CJ-5 (1981-83)
86=CJ-6(1981)
87=CJ-7(1981-86)
88=CJ-8, Scrambler(1981-86)
64=Comanche 2WD-6 Ft. Box(1986)
66=Comanche 2WD-7 Ft. Box(1986)
63=Comanche 4WD-6 Ft. Box(1986)
65=Comanche 4WD-7 Ft. Box(1986)
15=Grand Wagoneer 4 Dr.(1984-86)
25=J-10 Truck 7 Ft. Box(1981-84)
26=J10 Truck 8 Ft. Box(1981-86)
27=J-20 Truck 8 Ft. Box(1981-86)
15=Wagoneer 4 Dr.(1981-83)
75=Wagoneer 4WD-4 Dr.(1984-86)

BODY
CJ=CJ-5, CJ-6, CJ-7, CJ-8, Scrambler(1981-86)
MJ=Comanche Pickup(1986)

STYLES
SJ=Wagoneer(1981-83), Grand Wagoneer(1984-86), Cherokee(1981-83), J-10, J-20(1981-86)
XJ=Wagoneer(1984-86), Cherokee(1984-86)

AR = Use as Required - = Non Illustrated Part P.A.R. = Paint as Required

« RETURN TO GROUP INDEX

WINCH MOTOR AND DRUM RAMSEY REP 6000 CJ, SJ CHEROKEE, SJ WAGONEER, J10, J20
Figure 13-1600

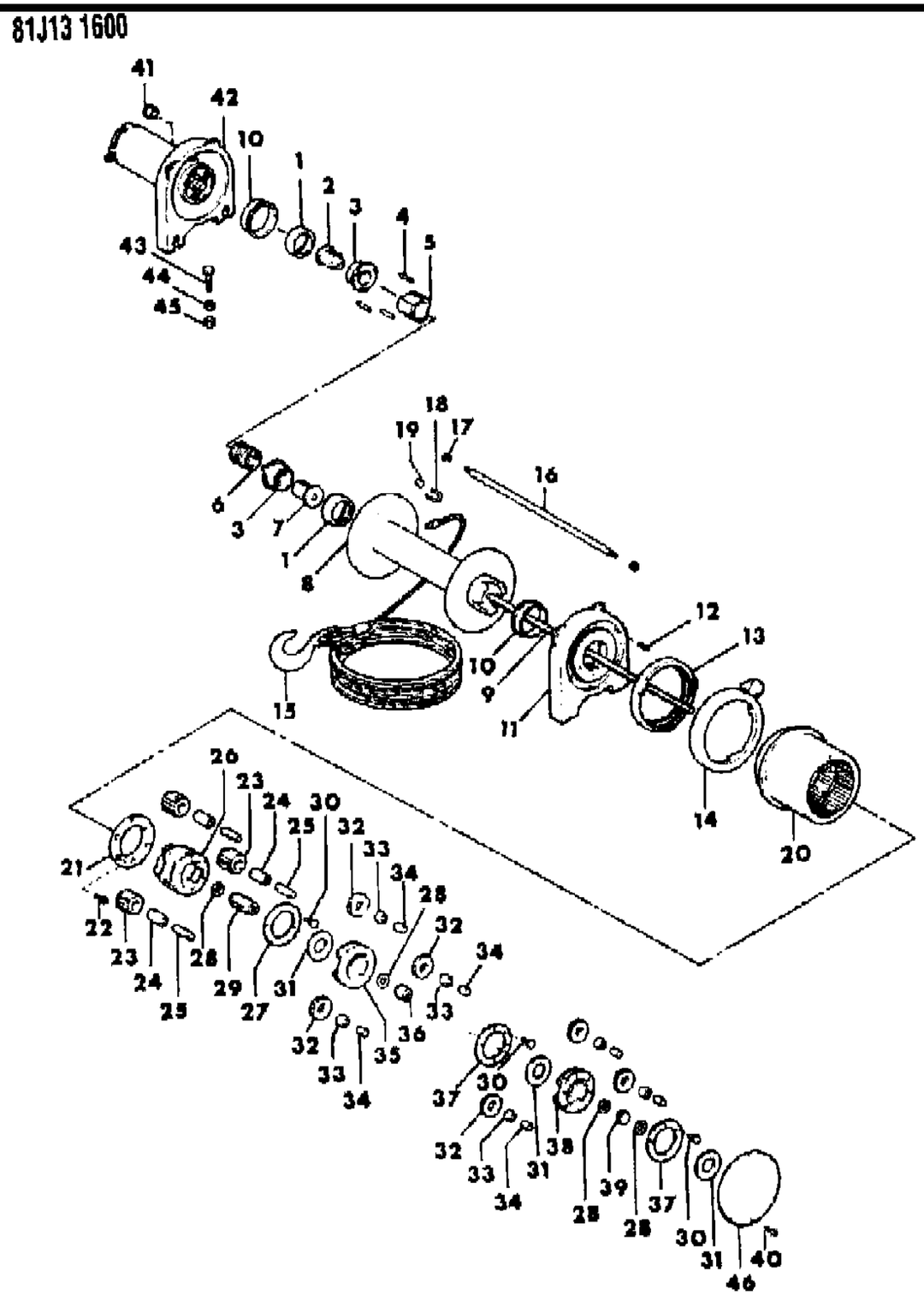

ITEM	PART NUMBER	QTY	BODY	MODEL	DESCRIPTION
1	8351 0133	2			BEARING
2	8351 0000	1			DRUM, Brake ***
3	8351 0132	2			RETAINER
4	8351 0001	3			ROLLER
5	8351 0130	1			COUPLING, Brake ***
6	8351 0002	1			SPRING, Brake
7	8351 0131	1			DRUM, Brake ***
8	8351 0101	1			DRUM, Cable ***
9	8351 0111	1			SHAFT
10	8351 0104	2			BUSHING
11	8351 0100	1			HOUSING
12	8351 0108	AR			SPRING
13	8351 0107	1			LOCK
14	8351 0106	1			RING, Cam
15	8351 0181	1			CABLE, Tow
16	8351 0134	1			BAR, Tie
17	8351 0135	AR			NUT
18	8351 0102	1			U-BOLT ***
19	8351 0180	2			NUT
20	8351 0105	1			GEAR ***
21	8351 0110	1			CAP
22	8351 0136	6			SCREW
23	8351 0119	3			GEAR ***
24	8351 0123	3			BUSHING
25	8351 0121	3			PIN
26	8351 0114	1			CARRIER ***
27	8351 0125	1			CAP
28	8351 0127	AR			WASHER
29	8351 0117	1			GEAR ***
30	8351 0137	6			RIVET
31	8351 0126	2			WASHER
32	8351 0118	4			GEAR ***
33	8351 0122	AR			BUSHING
34	8351 0120	4			PIN
35	8351 0113	1			CARRIER ***
36	8351 0116	1			GEAR ***
37	8351 0124	1			CAP
38	8351 0112	1			CARRIER ***
39	8351 0115	1			GEAR ***

MODEL CODES
16=Cherokee 2 Dr.(1981-83)
17=Cherokee 2 Dr.(1981-83)
73=Cherokee 2WD-2 Dr.(1984-86)
74=Cherokee 2WD-4 Dr.(1984-86)
18=Cherokee 4 Dr.(1981-83)
77=Cherokee 4WD-2 Dr.(1984-86)
78=Cherokee 4WD-4 Dr.(1984-86)
85=CJ-5 (1981-83)
86=CJ-6(1981)
87=CJ-7(1981-86)
88=CJ-8, Scrambler(1981-86)
64=Comanche 2WD-6 Ft. Box(1986)
66=Comanche 2WD-7 Ft. Box(1986)
63=Comanche 4WD-6 Ft. Box(1986)
65=Comanche 4WD-7 Ft. Box(1986)
15=Grand Wagoneer 4 Dr.(1984-86)
25=J-10 Truck 7 Ft. Box(1981-84)
26=J10 Truck 8 Ft. Box(1981-86)
27=J-20 Truck 8 Ft. Box(1981-86)
15=Wagoneer 4 Dr.(1981-83)
75=Wagoneer 4WD-4 Dr.(1984-86)

BODY
CJ=CJ-5, CJ-6, CJ-7, CJ-8, Scrambler(1981-86)
MJ=Comanche Pickup(1986)

STYLES
SJ=Wagoneer(1981-83), Grand Wagoneer(1984-86), Cherokee(1981-83), J-10, J-20(1981-86)
XJ=Wagoneer(1984-86), Cherokee(1984-86)

AR = Use as Required - = Non Illustrated Part P.A.R. = Paint as Required

« RETURN TO GROUP INDEX »

WINCH MOTOR AND DRUM RAMSEY REP 6000 CJ, SJ CHEROKEE, SJ WAGONEER, J10, J20
Figure 13-1600

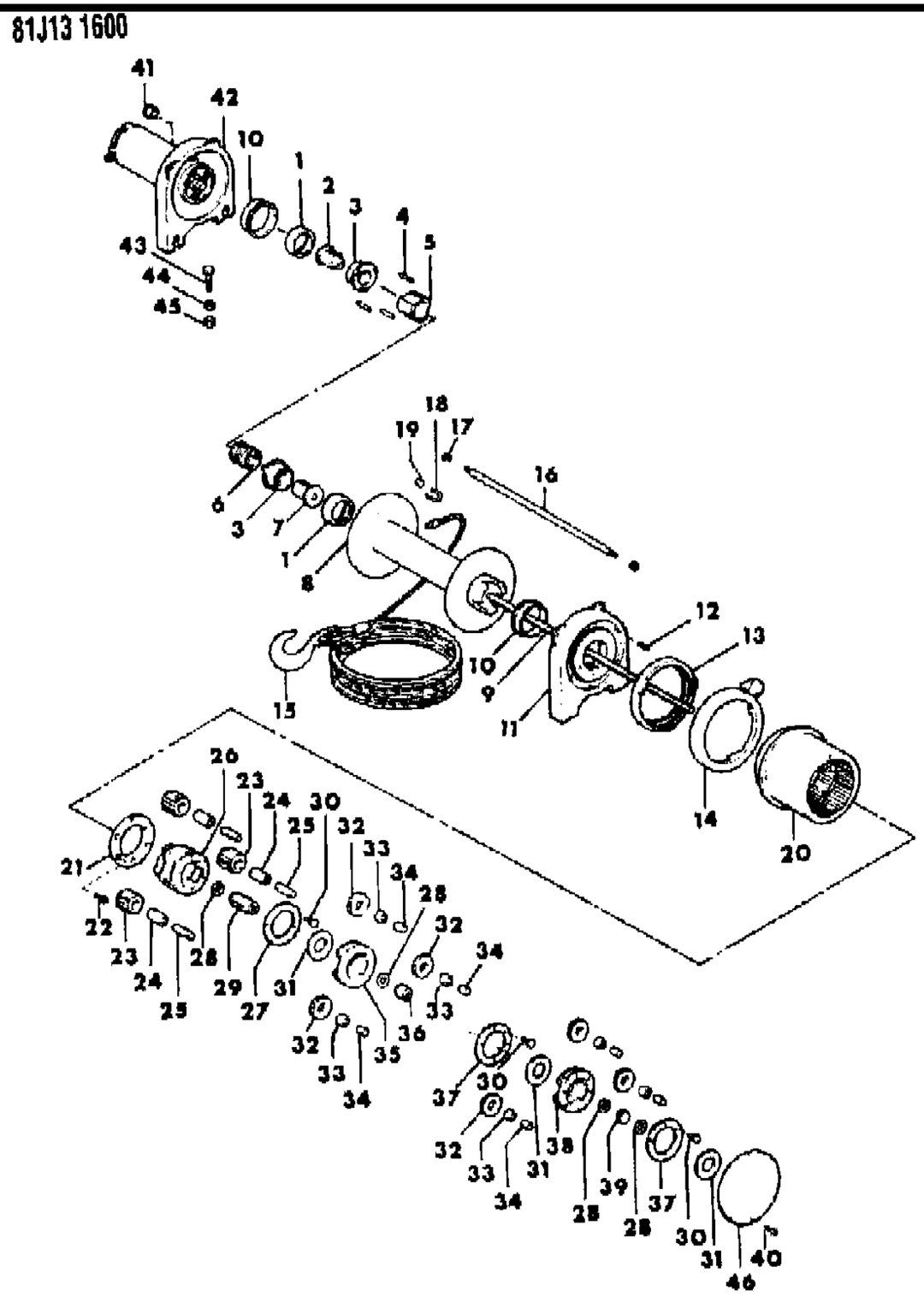

ITEM	PART NUMBER	QTY	BODY	MODEL	DESCRIPTION
40	8351 0129	6			SCREW
41	8351 0103	1			PLUG
42	8351 0038	1			MOTOR
43	8351 0166	AR			BOLT
44	J012 0382	AR			WASHER, Lock
45	J012 0377	AR			NUT
46	8351 0128	1			COVER

MODEL CODES

16=Cherokee 2 Dr.(1981-83)
17=Cherokee 2 Dr.(1981-83)
73=Cherokee 2WD-2 Dr.(1984-86)
74=Cherokee 2WD-4 Dr.(1984-86)
18=Cherokee 4 Dr.(1981-83)
77=Cherokee 4WD-2 Dr.(1984-86)
78=Cherokee 4WD-4 Dr.(1984-86)
85=CJ-5 (1981-83)
86=CJ-6(1981)
87=CJ-7(1981-86)
88=CJ-8, Scrambler(1981-86)
64=Comanche 2WD-6 Ft. Box(1986)
66=Comanche 2WD-7 Ft. Box(1986)
63=Comanche 4WD-6 Ft. Box(1986)
65=Comanche 4WD-7 Ft. Box(1986)
15=Grand Wagoneer 4 Dr.(1984-86)
25=J-10 Truck 7 Ft. Box(1981-84)
26=J10 Truck 8 Ft. Box(1981-86)
27=J-20 Truck 8 Ft. Box(1981-86)
15=Wagoneer 4 Dr.(1981-83)
75=Wagoneer 4WD-4 Dr.(1984-86)

BODY
CJ=CJ-5, CJ-6, CJ-7, CJ-8, Scrambler(1981-86)
MJ=Comanche Pickup(1986)

STYLES
SJ=Wagoneer(1981-83), Grand Wagoneer(1984-86), Cherokee(1981-83), J-10, J-20(1981-86)
XJ=Wagoneer(1984-86), Cherokee(1984-86)

AR = Use as Required - = Non Illustrated Part P.A.R. = Paint as Required

« RETURN TO GROUP INDEX

WINCH CONTROLS WARN 8274 OR 9854 CJ, SJ CHEROKEE, SJ WAGONEER, J10, J20
Figure 13-1700

81J13 1700

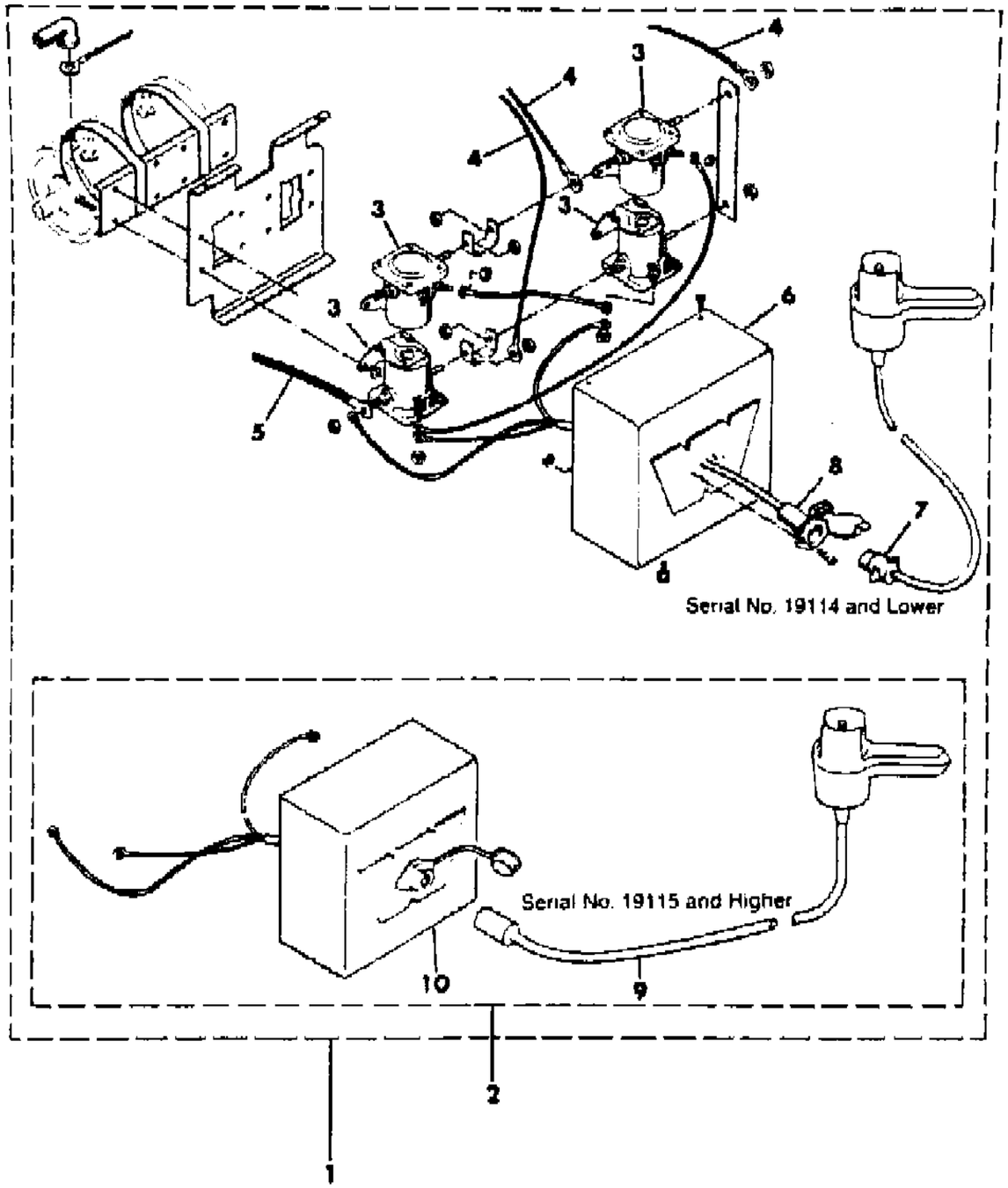

ITEM	PART NUMBER	QTY	BODY	MODEL	DESCRIPTION
1	J813 2756	1			SOLENOID ASSEMBLY, Winch, Up to Serial No. 19115 ***
2	J813 1410	1			SOLENOID ASSEMBLY, Winch, After Serial No. 19115 ***
3	J813 3870	4			SOLENOID ***
4	J812 3869	3			WIRE
5	J812 3757	1			WIRE
6	J812 3868	1			COVER, Up to Serial No 19115
7	J812 3758	1			SWITCH ASSEMBLY, Winch, Up to Serial No 19115 ***
8	J812 3871	1			SOCKET ASSEMBLY, Up to Serial No 19115 ***
9	J813 1412	1			SWITCH ASSEMBLY, Winch, After Serial No 19115 ***
10	J813 1411	1			COVER, After Serial No 19115

MODEL CODES

16=Cherokee 2 Dr.(1981-83)
17=Cherokee 2 Dr.(1981-83)
73=Cherokee 2WD-2 Dr.(1984-86)
74=Cherokee 2WD-4 Dr.(1984-86)
18=Cherokee 4 Dr.(1981-83)
77=Cherokee 4WD-2 Dr.(1984-86)
78=Cherokee 4WD-4 Dr.(1984-86)
85=CJ-5 (1981-83)
86=CJ-6(1981)
87=CJ-7(1981-86)
88=CJ-8, Scrambler(1981-86)
64=Comanche 2WD-6 Ft. Box(1986)
66=Comanche 2WD-7 Ft. Box(1986)
63=Comanche 4WD-6 Ft. Box(1986)
65=Comanche 4WD-7 Ft. Box(1986)
15=Grand Wagoneer 4 Dr.(1984-86)
25=J-10 Truck 7 Ft. Box(1981-84)
26=J10 Truck 8 Ft. Box(1981-86)
27=J-20 Truck 8 Ft. Box(1981-86)
15=Wagoneer 4 Dr.(1981-83)
75=Wagoneer 4WD-4 Dr.(1984-86)

BODY
CJ=CJ-5, CJ-6, CJ-7, CJ-8, Scrambler(1981-86)
MJ=Comanche Pickup(1986)

STYLES
SJ=Wagoneer(1981-83), Grand Wagoneer(1984-86), Cherokee(1981-83), J-10, J-20(1981-86)
XJ=Wagoneer(1984-86), Cherokee(1984-86)

AR = Use as Required - = Non Illustrated Part P.A.R. = Paint as Required

« RETURN TO GROUP INDEX

WINCH MOUNTING WARN 8274 OR 9854 CJ
Figure 13-1800

81J13 1800

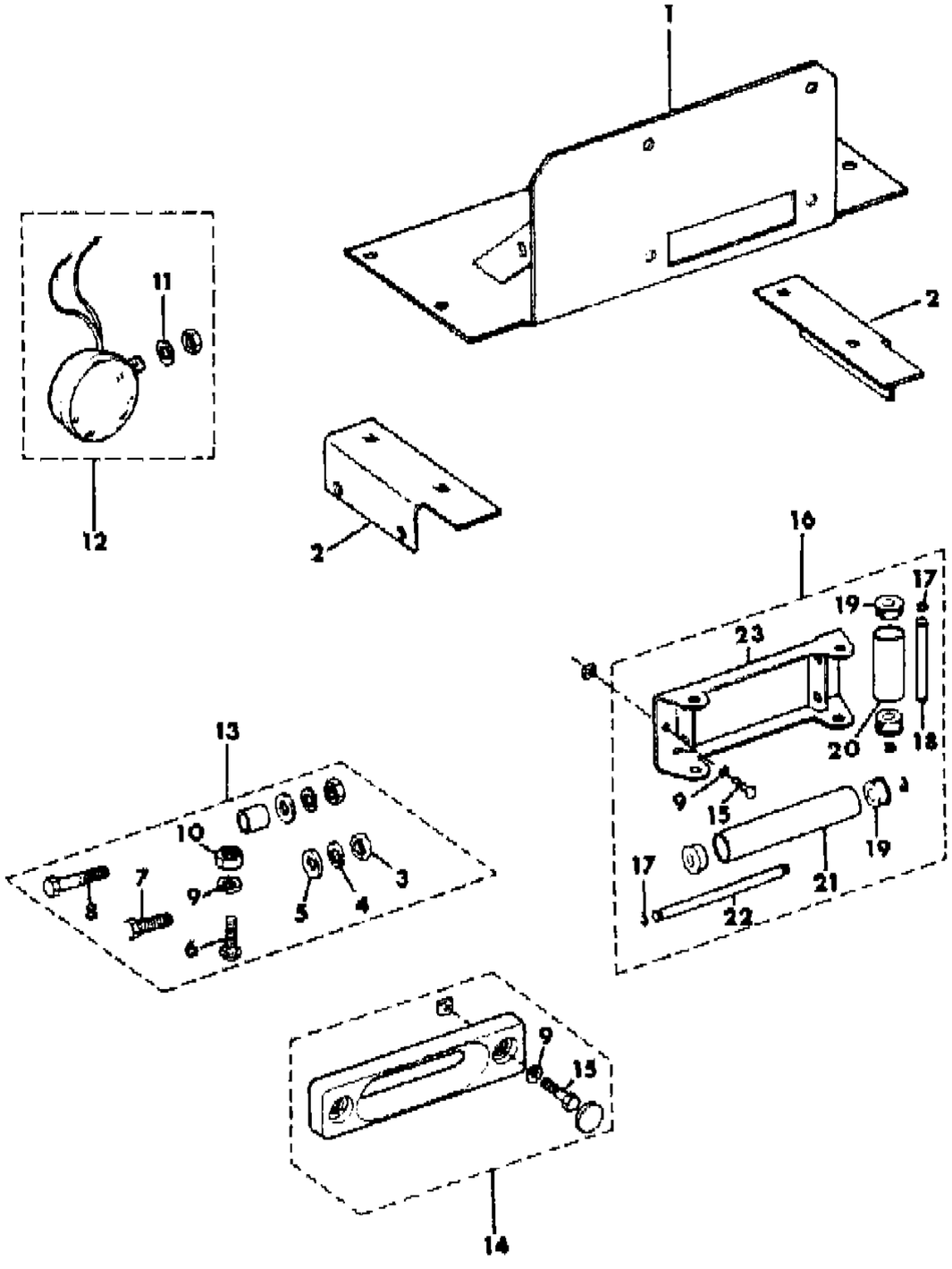

ITEM	PART NUMBER	QTY	BODY	MODEL	DESCRIPTION
1	J813 1083	1			BRACKET
2	J812 9966-7	1			BRACKET
3	J012 1589	2			NUT
4	J012 1574	2			WASHER, Lock
5	J013 1016	2			WASHER
6	J813 1024	AR			BOLT
7	J027 1547	AR			BOLT
8	S027 1730	AR			BOLT
9	J012 0383	AR			WASHER, Lock
10	J027 1506	AR			NUT
11	J012 0382	AR			WASHER, Lock
12	J812 9964	2			LAMP, Park/Turn
13	J813 1114	2			FASTENER PACKAGE ***
14	J812 3751	1			GUIDE, Cable
15	S018 0149	2			BOLT
16	J206 7311	1			GUIDE, Cable
17	J812 9993	1			RING
18	J812 9992	2			PIN
19	J812 9995	AR			BUSHING
20	J812 9997	2			ROLLER
21	J812 9996	2			ROLLER
22	J812 9994	2			PIN
23	J812 9991	1			FRAME

MODEL CODES

16=Cherokee 2 Dr.(1981-83)
17=Cherokee 2 Dr.(1981-83)
73=Cherokee 2WD-2 Dr.(1984-86)
74=Cherokee 2WD-4 Dr.(1984-86)
18=Cherokee 4 Dr.(1981-83)
77=Cherokee 4WD-2 Dr.(1984-86)
78=Cherokee 4WD-4 Dr.(1984-86)
85=CJ-5 (1981-83)
86=CJ-6(1981)
87=CJ-7(1981-86)
88=CJ-8, Scrambler(1981-86)
64=Comanche 2WD-6 Ft. Box(1986)
66=Comanche 2WD-7 Ft. Box(1986)
63=Comanche 4WD-6 Ft. Box(1986)
65=Comanche 4WD-7 Ft. Box(1986)
15=Grand Wagoneer 4 Dr.(1984-86)
25=J-10 Truck 7 Ft. Box(1981-84)
26=J10 Truck 8 Ft. Box(1981-86)
27=J-20 Truck 8 Ft. Box(1981-86)
15=Wagoneer 4 Dr.(1981-83)
75=Wagoneer 4WD-4 Dr.(1984-86)

BODY
CJ=CJ-5, CJ-6, CJ-7, CJ-8, Scrambler(1981-86)
MJ=Comanche Pickup(1986)

STYLES
SJ=Wagoneer(1981-83), Grand Wagoneer(1984-86), Cherokee(1981-83), J-10, J-20(1981-86)
XJ=Wagoneer(1984-86), Cherokee(1984-86)

AR = Use as Required - = Non Illustrated Part P.A.R. = Paint as Required

« RETURN TO GROUP INDEX

WINCH MOUNTING WARN 8274 OR 9854 CJ, SJ CHEROKEE, SJ WAGONEER, J10, J20
Figure 13-1900

81J13 1900

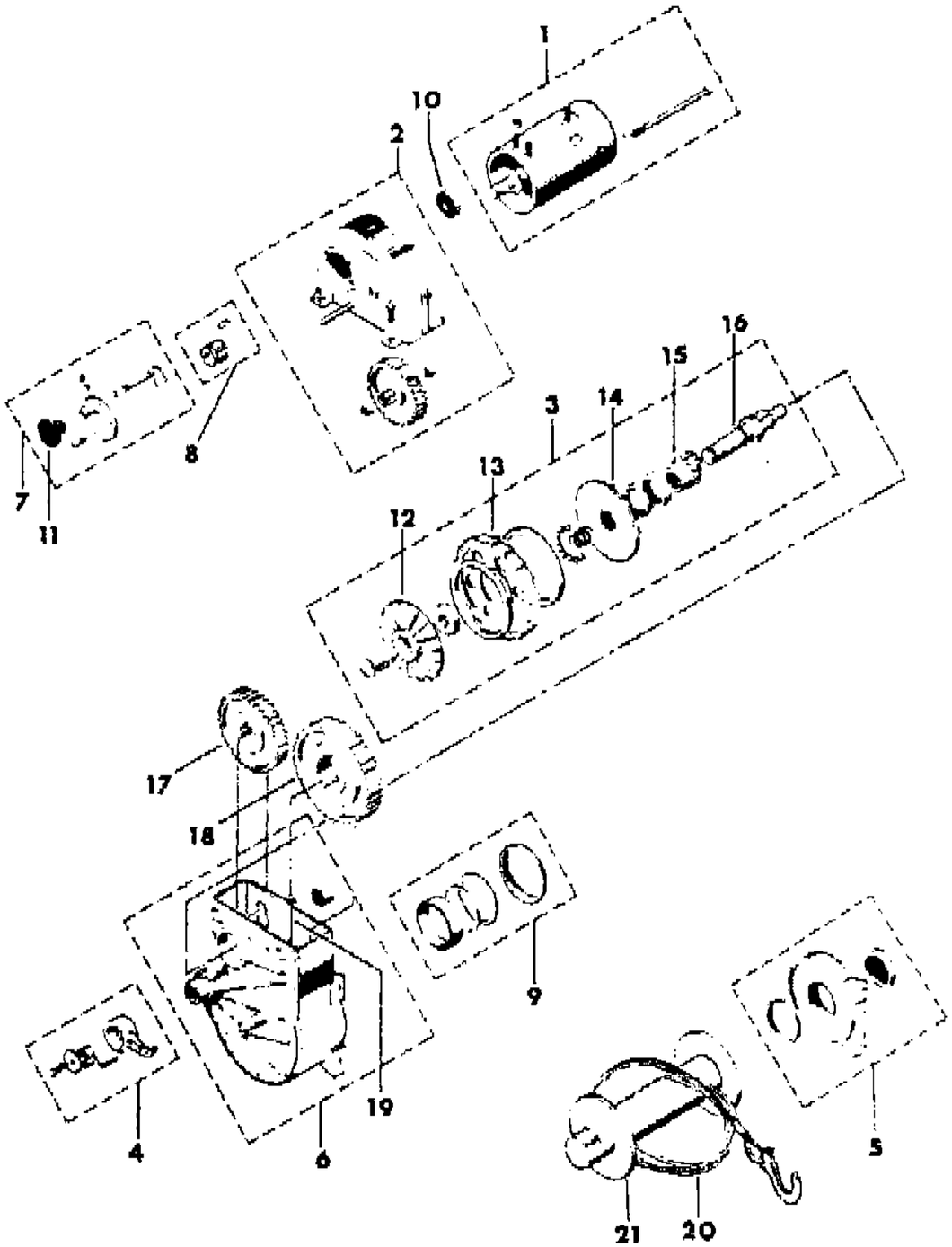

ITEM	PART NUMBER	QTY	BODY	MODEL	DESCRIPTION
1	J812 3738	1			MOTOR
2	J812 9908	1			HOUSING ASSEMBLY ***
3	J812 3741	1			BRAKE ASSEMBLY ***
4	J812 9912	1			PAWL, Locking
5	J812 3755	1			SUPPORT PACKAGE ***
6	J812 9911	1			HOUSING ASSEMBLY ***
7	J812 3761	1			CLUTCH PACKAGE ***
8	J812 9909	1			GEAR ***
9	J813 1074	1			SERVICE PACKAGE ***
10	J812 8990	1			BEARING
11	J812 3827	1			HANDLE
12	J812 3863	1			PLATE
13	J812 3864	1			GEAR ***
14	J812 3865	1			PLATE
15	J812 3866	1			CAM ***
16	J812 3867	1			SHAFT
17	J812 3743	1			GEAR ***
18	J812 3750	1			GEAR ***
19	J812 3744	1			PLATE
20	J812 3752	1			CABLE, Tow
21	J812 3745	1			DRUM, Cable ***

MODEL CODES

16=Cherokee 2 Dr.(1981-83)
17=Cherokee 2 Dr.(1981-83)
73=Cherokee 2WD-2 Dr.(1984-86)
74=Cherokee 2WD-4 Dr.(1984-86)
18=Cherokee 4 Dr.(1981-83)
77=Cherokee 4WD-2 Dr.(1984-86)
78=Cherokee 4WD-4 Dr.(1984-86)
85=CJ-5 (1981-83)
86=CJ-6(1981)
87=CJ-7(1981-86)
88=CJ-8, Scrambler(1981-86)
64=Comanche 2WD-6 Ft. Box(1986)
66=Comanche 2WD-7 Ft. Box(1986)
63=Comanche 4WD-6 Ft. Box(1986)
65=Comanche 4WD-7 Ft. Box(1986)
15=Grand Wagoneer 4 Dr.(1984-86)
25=J-10 Truck 7 Ft. Box(1981-84)
26=J10 Truck 8 Ft. Box(1981-86)
27=J-20 Truck 8 Ft. Box(1981-86)
15=Wagoneer 4 Dr.(1981-83)
75=Wagoneer 4WD-4 Dr.(1984-86)

BODY
CJ=CJ-5, CJ-6, CJ-7, CJ-8, Scrambler(1981-86)
MJ=Comanche Pickup(1986)

STYLES
SJ=Wagoneer(1981-83), Grand Wagoneer(1984-86), Cherokee(1981-83), J-10, J-20(1981-86)
XJ=Wagoneer(1984-86), Cherokee(1984-86)

AR = Use as Required - = Non Illustrated Part P.A.R. = Paint as Required

« RETURN TO GROUP INDEX

WINCH, PORTABLE ELECTRIC A15-12 OR A30-12C CJ, SJ CHEROKEE, SJ WAGONEER, J10, J20
Figure 13-2000

81J13 2000

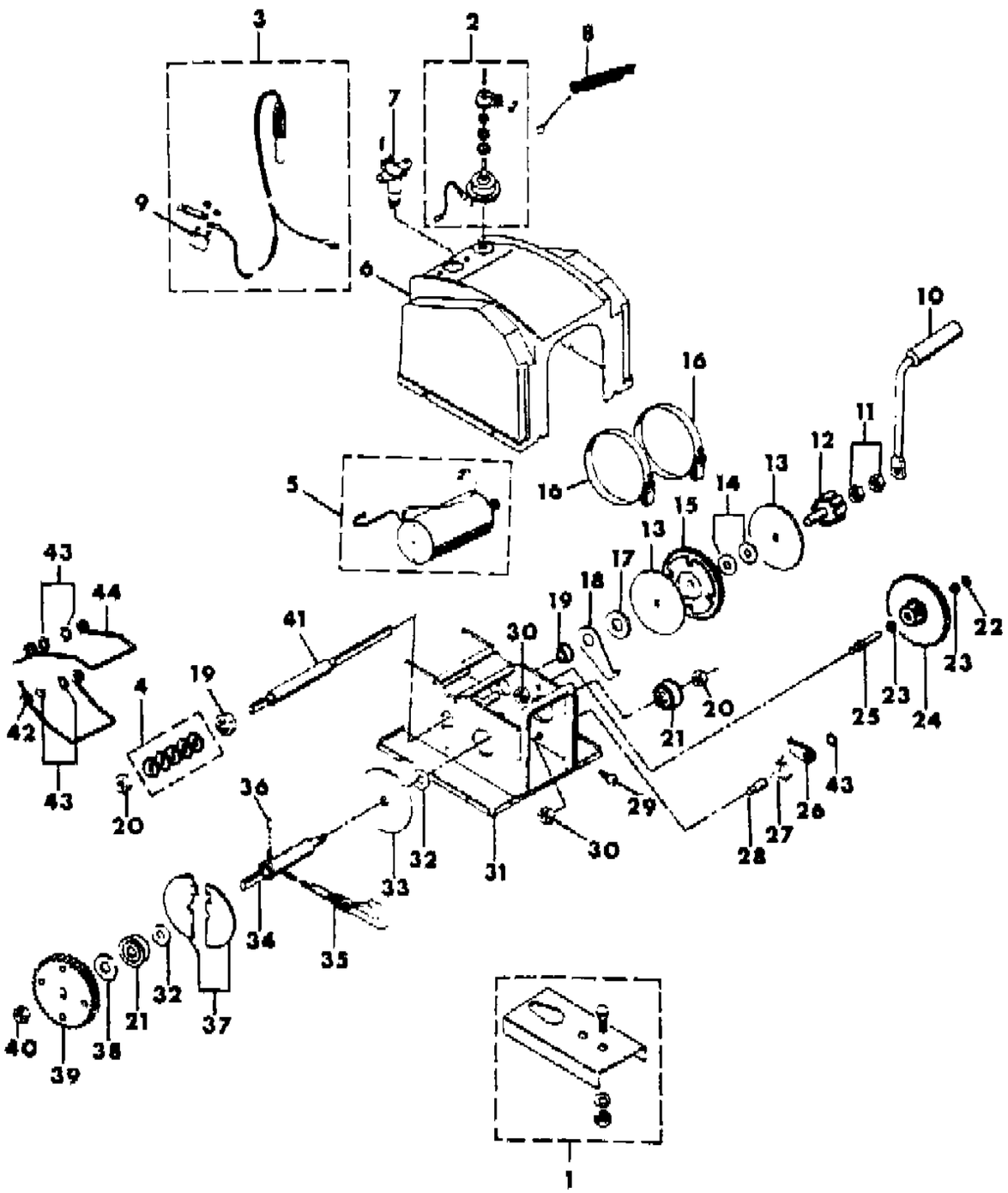

ITEM	PART NUMBER	QTY	BODY	MODEL	DESCRIPTION
1	J812 3916	1			ADAPTER
2	J213 3118	1			SWITCH ASSEMBLY ***
3	J213 3145	1			HARNESS, Wire
4	J213 3112	4			GEAR ***
5	J213 3121	1			MOTOR
6	J213 3138	1			HOUSING
7	J812 9540	1			SOCKET
8	J213 3146	1			ROPE ***
9	J213 3142	1			BREAKER, Circuit ***
10	J213 3147	1			HANDLE
11	J213 3128	2			NUT
12	J213 3127	1			GEAR ***
13	J213 3124	2			PLATE
14	J213 3126	2			WASHER
15	J213 3125	1			GEAR ***
16	J213 3122	2			CLAMP
17	J213 3140	1			WASHER
18	J213 3131	1			BRACKET
19	J213 3113	2			BEARING
20	J213 3132	2			NUT
21	J213 3107	2			BUSHING
22	J213 3129	2			SPACER
23	J213 3148	2			SPACER
24	J213 3130	1			GEAR ***
25	J213 3123	1			SHAFT
26	J213 3133	1			BRACKET
27	J213 3134	1			SPRING
28	J213 3135	1			SHAFT
29	J213 3139	1			SCREW
30	J213 3136	AR			NUT
31	J213 3102	1			BRACKET, Mounting
32	J213 3108	1			WASHER
33	J213 3103	1			PLATE
34	J213 3104	1			SHAFT
35	J213 3141	1			CABLE, Tow
36	J213 3105	1			FASTENER
37	J213 3109	2			PLATE
38	J213 3109	1			SPACER
39	J213 3110	1			GEAR ***

MODEL CODES
16=Cherokee 2 Dr.(1981-83)
17=Cherokee 2 Dr.(1981-83)
73=Cherokee 2WD-2 Dr.(1984-86)
74=Cherokee 2WD-4 Dr.(1984-86)
18=Cherokee 4 Dr.(1981-83)
77=Cherokee 4WD-2 Dr.(1984-86)
78=Cherokee 4WD-4 Dr.(1984-86)
85=CJ-5 (1981-83)
86=CJ-6(1981)
87=CJ-7(1981-86)
88=CJ-8, Scrambler(1981-86)
64=Comanche 2WD-6 Ft. Box(1986)
66=Comanche 2WD-7 Ft. Box(1986)
63=Comanche 4WD-6 Ft. Box(1986)
65=Comanche 4WD-7 Ft. Box(1986)
15=Grand Wagoneer 4 Dr.(1984-86)
25=J-10 Truck 7 Ft. Box(1981-84)
26=J10 Truck 8 Ft. Box(1981-86)
27=J-20 Truck 8 Ft. Box(1981-86)
15=Wagoneer 4 Dr.(1981-83)
75=Wagoneer 4WD-4 Dr.(1984-86)

BODY
CJ=CJ-5, CJ-6, CJ-7, CJ-8, Scrambler(1981-86)
MJ=Comanche Pickup(1986)

STYLES
SJ=Wagoneer(1981-83), Grand Wagoneer(1984-86), Cherokee(1981-83), J-10, J-20(1981-86)
XJ=Wagoneer(1984-86), Cherokee(1984-86)

AR = Use as Required - = Non Illustrated Part P.A.R. = Paint as Required

81J13 2000

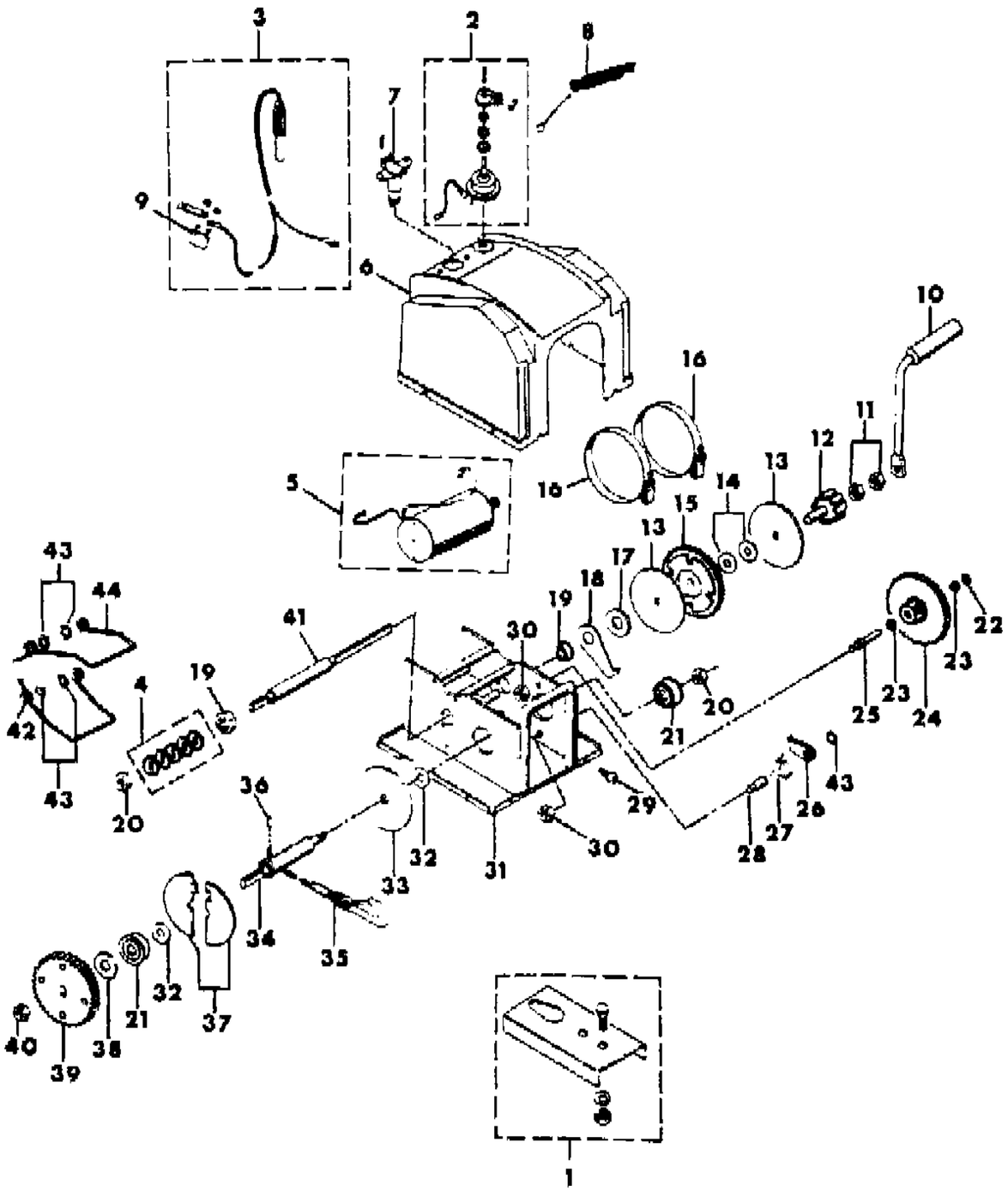

ITEM	PART NUMBER	QTY	BODY	MODEL	DESCRIPTION
40	J213 3111	1			NUT
41	J213 3114	1			SHAFT
42	J213 3116	1			SPRING
43	J213 3117	5			WASHER
44	J213 3115	1			SPRING

MODEL CODES
16=Cherokee 2 Dr.(1981-83)
17=Cherokee 2 Dr.(1981-83)
73=Cherokee 2WD-2 Dr.(1984-86)
74=Cherokee 2WD-4 Dr.(1984-86)
18=Cherokee 4 Dr.(1981-83)
77=Cherokee 4WD-2 Dr.(1984-86)
78=Cherokee 4WD-4 Dr.(1984-86)
85=CJ-5 (1981-83)
86=CJ-6(1981)
87=CJ-7(1981-86)
88=CJ-8, Scrambler(1981-86)
64=Comanche 2WD-6 Ft. Box(1986)
66=Comanche 2WD-7 Ft. Box(1986)
63=Comanche 4WD-6 Ft. Box(1986)
65=Comanche 4WD-7 Ft. Box(1986)
15=Grand Wagoneer 4 Dr.(1984-86)
25=J-10 Truck 7 Ft. Box(1981-84)
26=J10 Truck 8 Ft. Box(1981-86)
27=J-20 Truck 8 Ft. Box(1981-86)
15=Wagoneer 4 Dr.(1981-83)
75=Wagoneer 4WD-4 Dr.(1984-86)

BODY
CJ=CJ-5, CJ-6, CJ-7, CJ-8, Scrambler(1981-86)
MJ=Comanche Pickup(1986)

STYLES
SJ=Wagoneer(1981-83), Grand Wagoneer(1984-86), Cherokee(1981-83), J-10, J-20(1981-86)
XJ=Wagoneer(1984-86), Cherokee(1984-86)

AR = Use as Required - = Non Illustrated Part P.A.R. = Paint as Required

WINCH, PORTABLE ELECTRIC A15-12C CJ, SJ CHEROKEE, SJ WAGONEER, J10, J20
Figure 13-2100

81J13 2100

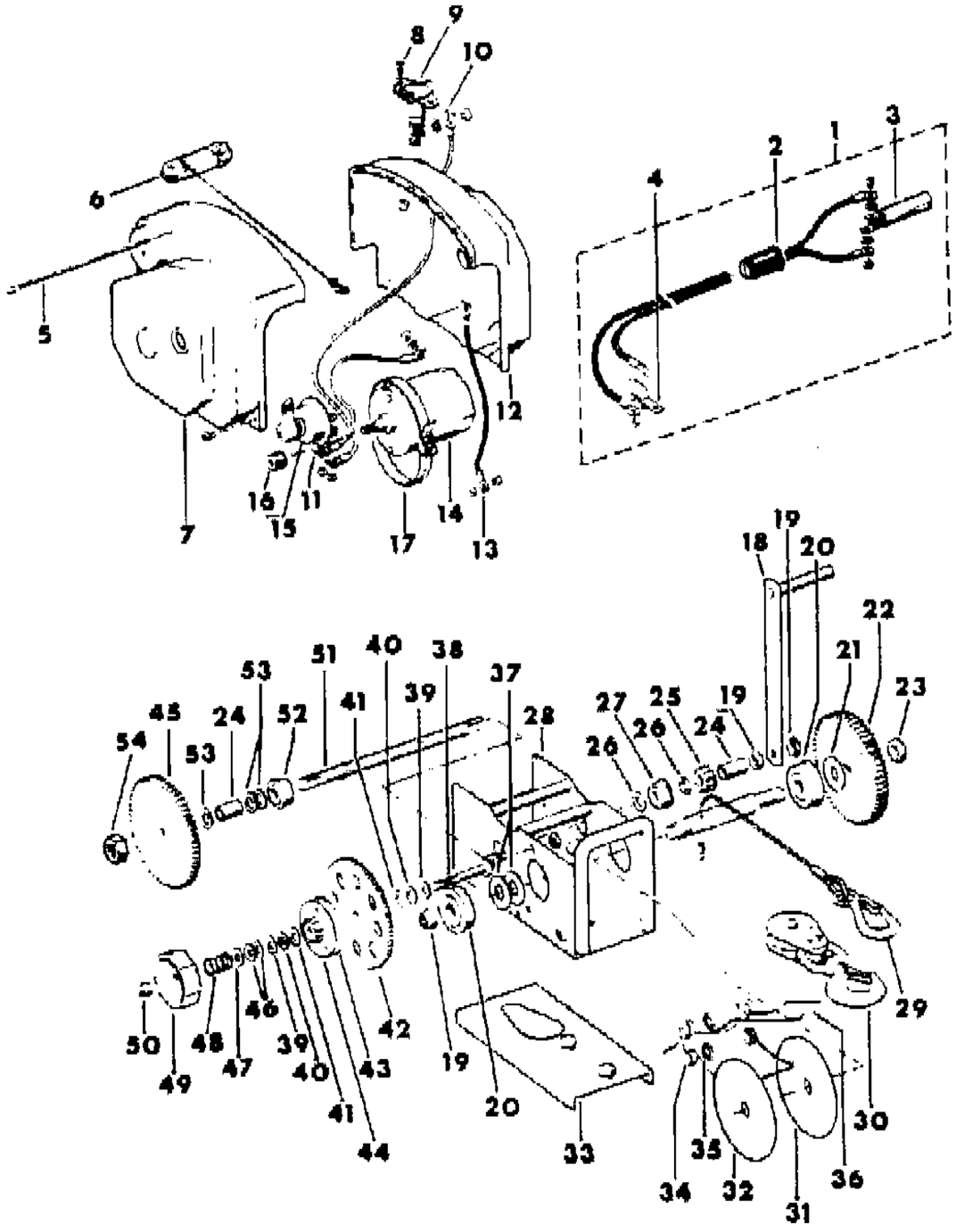

ITEM	PART NUMBER	QTY	BODY	MODEL	DESCRIPTION
1	J213 1145	1			HARNESS, Wire
2	J213 3144	1			CONNECTOR
3	J213 3143	1			PLUG
4	J213 3142	1			BREAKER, Circuit ***
5	J812 3695	1			ROD
6	J213 3146	1			ROPE ***
7	J812 3694	1			HOUSING
8	J213 3137	1			SCREW
9	J812 9540	1			SOCKET
10	J812 3676	1			WIRE
11	J812 3675	1			WIRE
12	J812 3693	1			HOUSING
13	J812 3677	1			WIRE
14	J812 3678	1			MOTOR
15	J213 3118	1			SWITCH
16	J812 3679	1			GEAR ***
17	J213 3122	1			CLAMP
18	J213 3147	1			HANDLE
19	J213 3132	AR			NUT
20	J213 3107	2			BEARING
21	J213 3109	1			WASHER
22	J213 3110	1			GEAR ***
23	J213 3111	1			NUT
24	J812 3674	2			SLEEVE
25	J213 3112	1			GEAR ***
26	J812 3672	2			WASHER
27	J213 3113	1			BEARING
28	J812 3670	1			BRACKET, Mounting
29	J213 3141	1			CABLE, Tow
30	J213 3100	1			HOOK, Tow
31	J213 3106	1			PLATE
32	J213 3103	1			PLATE
33	J213 3101	1			BRACKET, Mounting
34	J213 3116	1			SPRING
35	J213 3117	AR			WASHER
36	J213 3115	1			SPRING
37	J213 3108	2			WASHER
38	J812 3680	1			STUD
39	J812 3683	1			RACE, Thrust Washer ***

MODEL CODES

16=Cherokee 2 Dr.(1981-83)
17=Cherokee 2 Dr.(1981-83)
73=Cherokee 2WD-2 Dr.(1984-86)
74=Cherokee 2WD-4 Dr.(1984-86)
18=Cherokee 4 Dr.(1981-83)
77=Cherokee 4WD-2 Dr.(1984-86)
78=Cherokee 4WD-4 Dr.(1984-86)
85=CJ-5 (1981-83)
86=CJ-6(1981)
87=CJ-7(1981-86)
88=CJ-8, Scrambler(1981-86)
64=Comanche 2WD-6 Ft. Box(1986)
66=Comanche 2WD-7 Ft. Box(1986)
63=Comanche 4WD-6 Ft. Box(1986)
65=Comanche 4WD-7 Ft. Box(1986)
15=Grand Wagoneer 4 Dr.(1984-86)
25=J-10 Truck 7 Ft. Box(1981-84)
26=J10 Truck 8 Ft. Box(1981-86)
27=J-20 Truck 8 Ft. Box(1981-86)
15=Wagoneer 4 Dr.(1981-83)
75=Wagoneer 4WD-4 Dr.(1984-86)

BODY
CJ=CJ-5, CJ-6, CJ-7, CJ-8, Scrambler(1981-86)
MJ=Comanche Pickup(1986)

STYLES
SJ=Wagoneer(1981-83), Grand Wagoneer(1984-86), Cherokee(1981-83), J-10, J-20(1981-86)
XJ=Wagoneer(1984-86), Cherokee(1984-86)

AR = Use as Required - = Non Illustrated Part P.A.R. = Paint as Required

« RETURN TO GROUP INDEX »

81J13 2100

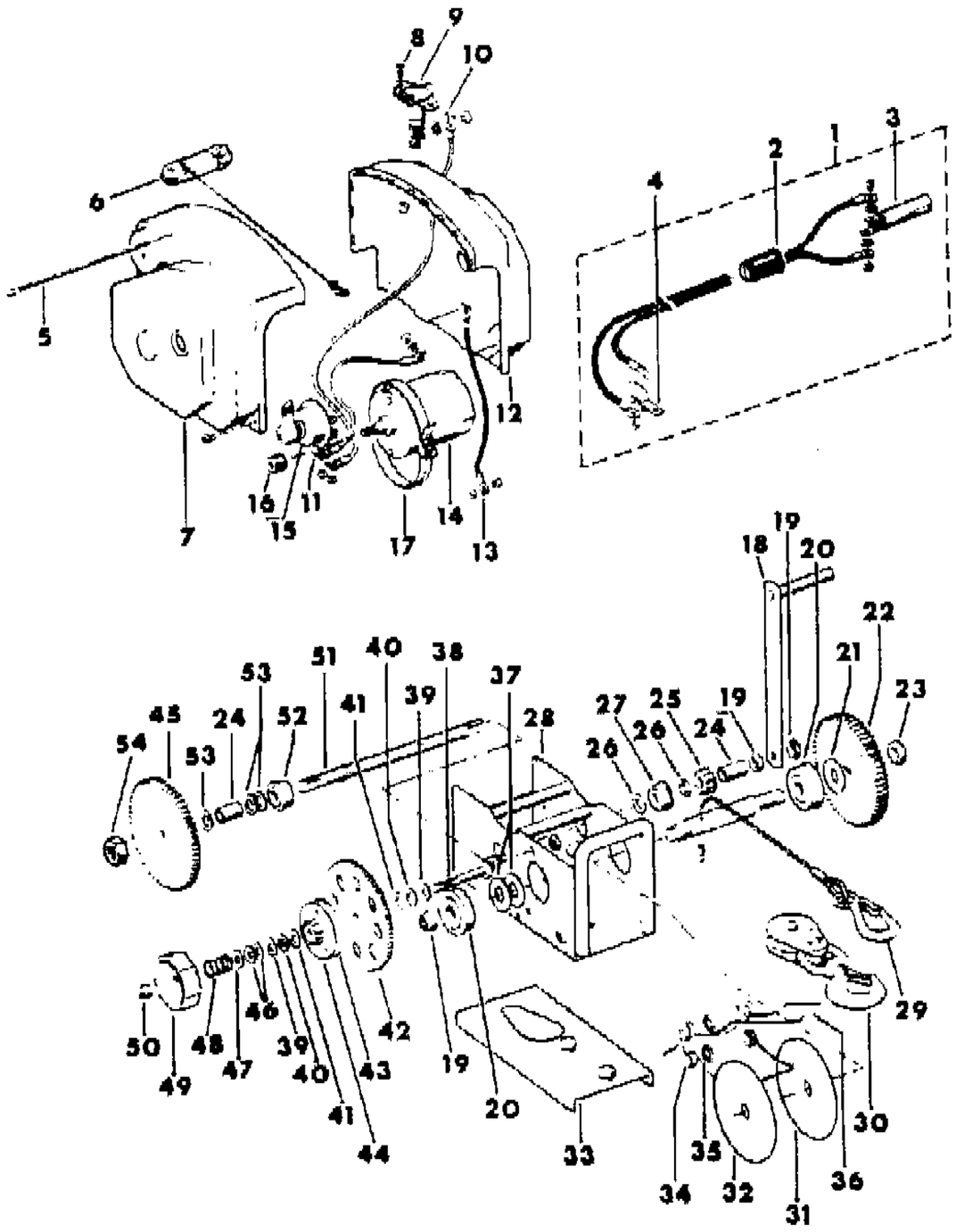

ITEM	PART NUMBER	QTY	BODY	MODEL	DESCRIPTION
40	J812 3681	2			BEARING
41	J812 3682	2			RACE, Thrust Washer ***
42	J812 3688	1			GEAR, Drive ***
43	J812 3684	1			LINING ***
44	J812 3687	1			GEAR ***
45	J812 3692	1			GEAR ***
46	J812 3689	AR			WASHER
47	J812 3690	1			WASHER
48	J812 3691	1			SPRING
49	J812 3685	1			KNOB
50	J812 7686	1			NUT, Acorn
51	J812 3673	1			SHAFT
52	J213 3113	1			BEARING
53	J812 3672	2			WASHER
54	J213 3132	1			NUT

MODEL CODES

16=Cherokee 2 Dr.(1981-83)
17=Cherokee 2 Dr.(1981-83)
73=Cherokee 2WD-2 Dr.(1984-86)
74=Cherokee 2WD-4 Dr.(1984-86)
18=Cherokee 4 Dr.(1981-83)
77=Cherokee 4WD-2 Dr.(1984-86)
78=Cherokee 4WD-4 Dr.(1984-86)
85=CJ-5 (1981-83)
86=CJ-6(1981)
87=CJ-7(1981-86)
88=CJ-8, Scrambler(1981-86)
64=Comanche 2WD-6 Ft. Box(1986)
66=Comanche 2WD-7 Ft. Box(1986)
63=Comanche 4WD-6 Ft. Box(1986)
65=Comanche 4WD-7 Ft. Box(1986)
15=Grand Wagoneer 4 Dr.(1984-86)
25=J-10 Truck 7 Ft. Box(1981-84)
26=J10 Truck 8 Ft. Box(1981-86)
27=J-20 Truck 8 Ft. Box(1981-86)
15=Wagoneer 4 Dr.(1981-83)
75=Wagoneer 4WD-4 Dr.(1984-86)

BODY
CJ=CJ-5, CJ-6, CJ-7, CJ-8, Scrambler(1981-86)
MJ=Comanche Pickup(1986)

STYLES
SJ=Wagoneer(1981-83), Grand Wagoneer(1984-86), Cherokee(1981-83), J-10, J-20(1981-86)
XJ=Wagoneer(1984-86), Cherokee(1984-86)

AR = Use as Required - = Non Illustrated Part P.A.R. = Paint as Required

SNOW PLOW - POWER LIFT UNIT CJ, XJ CHEROKEE, XJ WAGONEER, SJ CHEROKEE, SJ WAGONEER, J10, J20
Figure 13-2200

81J13 2200

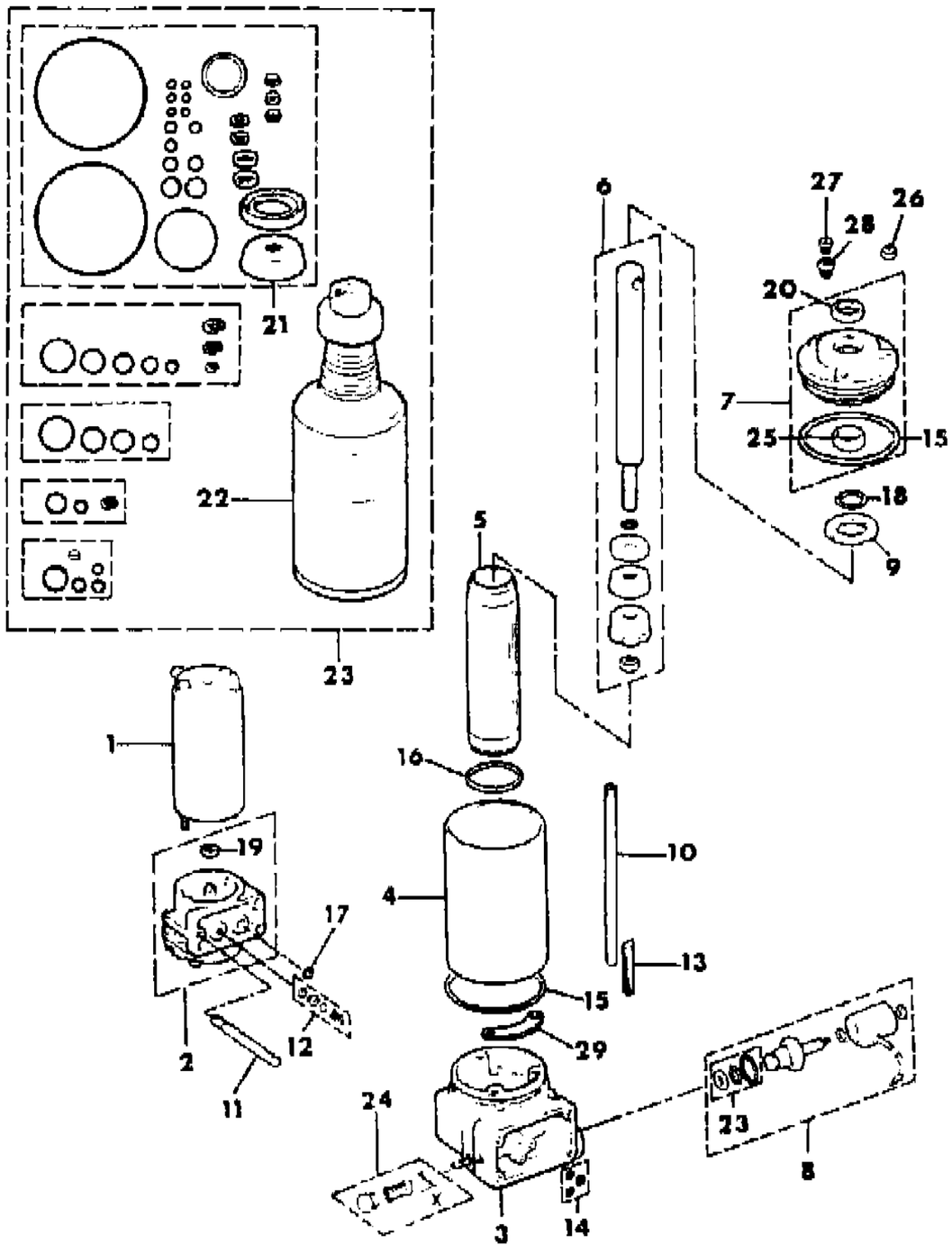

ITEM	PART NUMBER	QTY	BODY	MODEL	DESCRIPTION
1	J201 5054	1			MOTOR, Pump
2	J201 5026	1			PUMP ASSEMBLY, Snow Plow Lift ***
3	J201 5573	1			BASE, Lift Cylinder
4	J201 5045	1			TANK, Lift Cylinder ***
5	J201 5207	1			CYLINDER, Snow Plow Lift
6	J201 5335	1			RAM, Snow Plow Lift
7	J201 5194	1			COVER ASSEMBLY, Lift Cylinder ***
8	J201 5356	1			SOLENOID, Valve ***
9	J201 5209	9			WASHER
10	J201 5042	3			STUD
11	J201 5043	3			STUD
12	J201 5574	1			VALVE PACKAGE, Check ***
13	J201 5326	1			STRAINER
14	J201 5122	1			O-RING PACKAGE ***
15	J201 5131	2			O-RING ***
16	J201 5163	1			O-RING ***
17	J201 5127	1			O-RING ***
18	J201 5198	1			O-RING ***
19	J201 5581	1			SEAL, Pump Shaft
20	J200 5119	1			SEAL, Lift Ram
21	J201 5254	1			SEAL PACKAGE, Lift Cylinder ***
22	J201 5134	1			FLUID, Hydraulic
23	J201 5456	1			SEAL PACKAGE, Snow Plow Lift ***
24					FILTER PACKAGE ***
	J201 5620	1			.50" Diameter
	J201 5641	1			.56" Diameter
25	J201 5199	1			SLEEVE, Lift Ram
26	J202 0697	3			NUT, Lock
27	J202 1806	1			VALVE, Pressure Relief
28	J202 1805	1			FITTING, Reducer ***
29	J201 5621	1			BAFFLE

MODEL CODES

16=Cherokee 2 Dr.(1981-83)
17=Cherokee 2 Dr.(1981-83)
73=Cherokee 2WD-2 Dr.(1984-86)
74=Cherokee 2WD-4 Dr.(1984-86)
18=Cherokee 4 Dr.(1981-83)
77=Cherokee 4WD-2 Dr.(1984-86)
78=Cherokee 4WD-4 Dr.(1984-86)
85=CJ-5 (1981-83)
86=CJ-6(1981)
87=CJ-7(1981-86)
88=CJ-8, Scrambler(1981-86)
64=Comanche 2WD-6 Ft. Box(1986)
66=Comanche 2WD-7 Ft. Box(1986)
63=Comanche 4WD-6 Ft. Box(1986)
65=Comanche 4WD-7 Ft. Box(1986)
15=Grand Wagoneer 4 Dr.(1984-86)
25=J-10 Truck 7 Ft. Box(1981-84)
26=J10 Truck 8 Ft. Box(1981-86)
27=J-20 Truck 8 Ft. Box(1981-86)
15=Wagoneer 4 Dr.(1981-83)
75=Wagoneer 4WD-4 Dr.(1984-86)

BODY
CJ=CJ-5, CJ-6, CJ-7, CJ-8, Scrambler(1981-86)
MJ=Comanche Pickup(1986)

STYLES
SJ=Wagoneer(1981-83), Grand Wagoneer(1984-86), Cherokee(1981-83), J-10, J-20(1981-86)
XJ=Wagoneer(1984-86), Cherokee(1984-86)

AR = Use as Required - = Non Illustrated Part P.A.R. = Paint as Required

« RETURN TO GROUP INDEX

SNOW PLOW LIFT RAM AND RESERVOIR, HYDRAULIC CJ, SJ CHEROKEE, SJ WAGONEER, J10, J20
Figure 13-2300

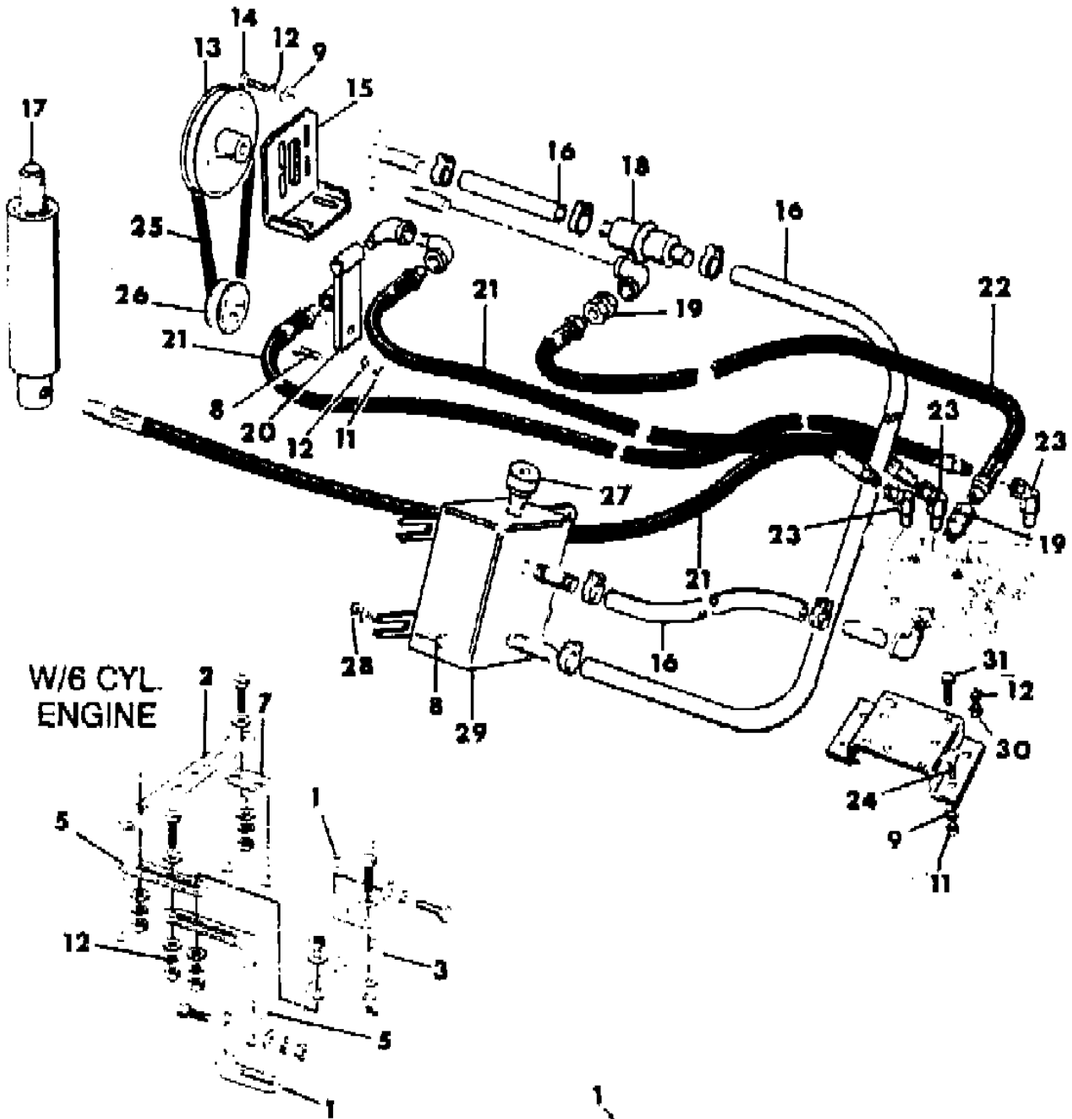

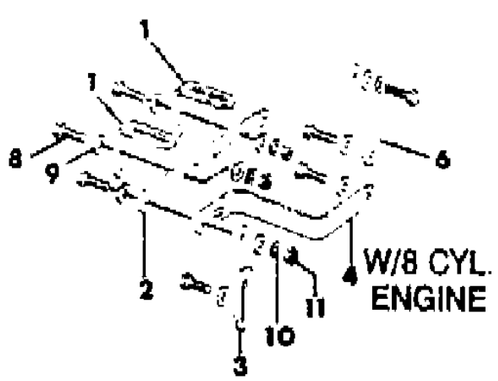

ITEM	PART NUMBER	QTY	BODY	MODEL	DESCRIPTION
1	J812 3577	AR			BRACKET
2	J812 3578	1			BAR
3	J812 3733	1			BAR
4	J813 1071	1			BRACKET
5	J812 3731	AR			BAR
6	J813 1072	1			BRACE
7	J812 3732	1			BAR
8	J012 2017	AR			BOLT
9	J011 8664	AR			WASHER
10	J010 3319	AR			WASHER, Lock
11	J010 2634	AR			NUT
12	J012 0380	AR			WASHER, Lock
13	J213 0805	1			PULLEY ***
14	S012 0887	1			BOLT
15	J812 3575	1			BRACKET
16	J213 0947	AR			HOSE, 7' Required
17	J200 5984	1			RAM, Snow Plow Lift
18	J213 0002	1			FILTER
19	J812 3576	AR			COUPLING ***
20	J200 5606	1			BRACKET
21					HOSE
	J213 0954	AR			4' Required
	J213 0955	AR			5' Required
22					HOSE
	J213 0951	1			2' Required
	J213 0952	1			5' Required
23	J213 0140	AR			COUPLING ***
24	J012 2007	4			BOLT
25					BELT, Hydraulic Pump
	J812 3585	1			Six Cylinder Engine
	J812 3584	1			Eight Cylinder Engine
26	J812 3892	1			PULLEY ***
27	J213 0143	1			VENT
28	J010 3320	AR			WASHER
29	J812 3574	1			TANK, Lift Cyinder ***
30	J012 0375	AR			NUT
31	J010 0114	1			BOLT

MODEL CODES
16=Cherokee 2 Dr.(1981-83)
17=Cherokee 2 Dr.(1981-83)
73=Cherokee 2WD-2 Dr.(1984-86)
74=Cherokee 2WD-4 Dr.(1984-86)
18=Cherokee 4 Dr.(1981-83)
77=Cherokee 4WD-2 Dr.(1984-86)
78=Cherokee 4WD-4 Dr.(1984-86)
85=CJ-5 (1981-83)
86=CJ-6(1981)
87=CJ-7(1981-86)
88=CJ-8, Scrambler(1981-86)
64=Comanche 2WD-6 Ft. Box(1986)
66=Comanche 2WD-7 Ft. Box(1986)
63=Comanche 4WD-6 Ft. Box(1986)
65=Comanche 4WD-7 Ft. Box(1986)
15=Grand Wagoneer 4 Dr.(1984-86)
25=J-10 Truck 7 Ft. Box(1981-84)
26=J10 Truck 8 Ft. Box(1981-86)
27=J-20 Truck 8 Ft. Box(1981-86)
15=Wagoneer 4 Dr.(1981-83)
75=Wagoneer 4WD-4 Dr.(1984-86)

BODY
CJ=CJ-5, CJ-6, CJ-7, CJ-8, Scrambler(1981-86)
MJ=Comanche Pickup(1986)

STYLES
SJ=Wagoneer(1981-83), Grand Wagoneer(1984-86), Cherokee(1981-83), J-10, J-20(1981-86)
XJ=Wagoneer(1984-86), Cherokee(1984-86)

AR = Use as Required - = Non Illustrated Part P.A.R. = Paint as Required

« RETURN TO GROUP INDEX

SNOW PLOW HYDRAULIC PUMP CJ, SJ CHEROKEE, SJ WAGONEER, J10, J20
Figure 13-2400

81J13 2400

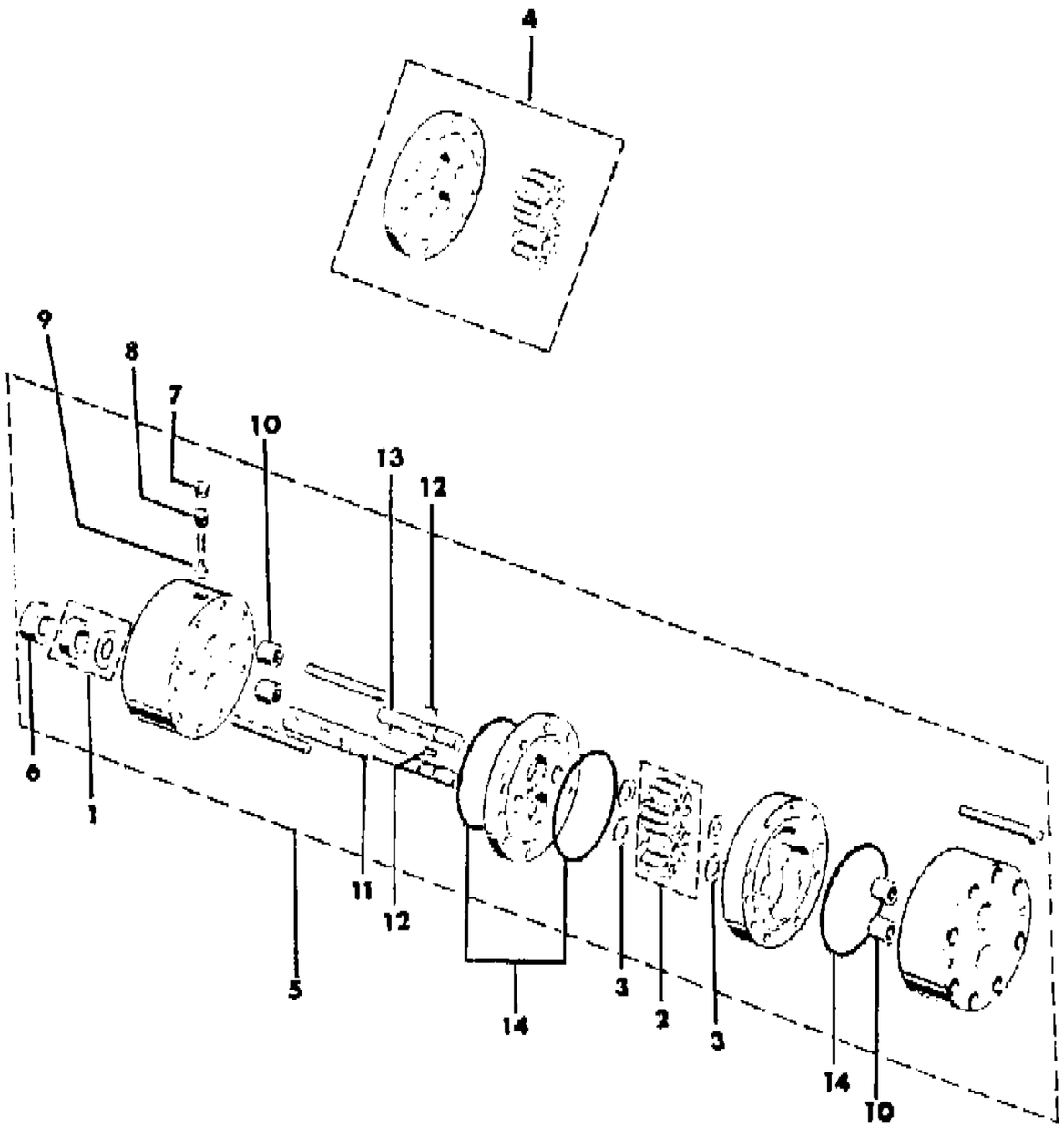

ITEM	PART NUMBER	QTY	BODY	MODEL	DESCRIPTION
1	J812 3587	1			SEAL
2	J812 3597	1			GEAR PACKAGE ***
3	J812 3596	4			RING
4	J813 1080	1			GEAR PACKAGE ***
5	J213 0340	1			PUMP ASSEMBLY ***
6	J812 3586	1			BASE
7	J812 3594	1			PLUG
8	J812 3593	8			SCREW PACKAGE ***
9	J812 7592	1			PLUNGER
10	J812 3588	4			BEARING
11	J812 3591	1			SHAFT
12	J812 3589	2			KEY
13	J812 3590	1			SHAFT
14	J812 3595	3			O-RING ***

MODEL CODES

16=Cherokee 2 Dr.(1981-83)
17=Cherokee 2 Dr.(1981-83)
73=Cherokee 2WD-2 Dr.(1984-86)
74=Cherokee 2WD-4 Dr.(1984-86)
18=Cherokee 4 Dr.(1981-83)
77=Cherokee 4WD-2 Dr.(1984-86)
78=Cherokee 4WD-4 Dr.(1984-86)
85=CJ-5 (1981-83)
86=CJ-6(1981)
87=CJ-7(1981-86)
88=CJ-8, Scrambler(1981-86)
64=Comanche 2WD-6 Ft. Box(1986)
66=Comanche 2WD-7 Ft. Box(1986)
63=Comanche 4WD-6 Ft. Box(1986)
65=Comanche 4WD-7 Ft. Box(1986)
15=Grand Wagoneer 4 Dr.(1984-86)
25=J-10 Truck 7 Ft. Box(1981-84)
26=J10 Truck 8 Ft. Box(1981-86)
27=J-20 Truck 8 Ft. Box(1981-86)
15=Wagoneer 4 Dr.(1981-83)
75=Wagoneer 4WD-4 Dr.(1984-86)

BODY

CJ=CJ-5, CJ-6, CJ-7, CJ-8, Scrambler(1981-86)
MJ=Comanche Pickup(1986)

STYLES

SJ=Wagoneer(1981-83), Grand Wagoneer(1984-86), Cherokee(1981-83), J-10, J-20(1981-86)
XJ=Wagoneer(1984-86), Cherokee(1984-86)

AR = Use as Required - = Non Illustrated Part P.A.R. = Paint as Required

« RETURN TO GROUP INDEX

SNOW PLOW HYDRAULIC CONTROL VALVES CJ, SJ CHEROKEE, SJ WAGONEER, J10, J20
Figure 13-2500

81J13 2500

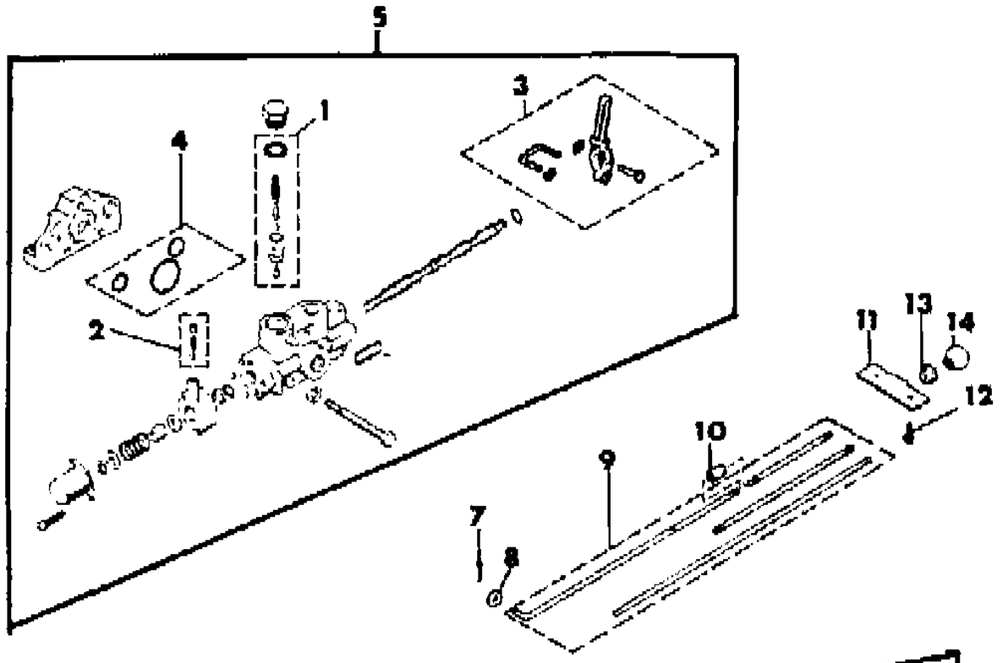

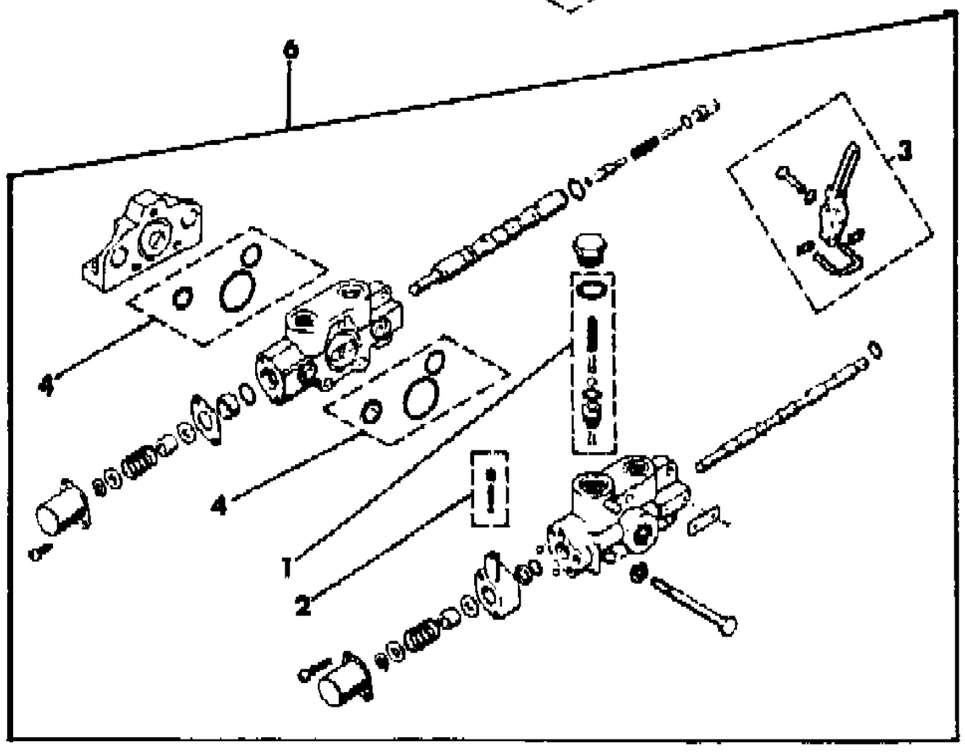

ITEM	PART NUMBER	QTY	BODY	MODEL	DESCRIPTION
1	J812 3570	AR			REPAIR PACKAGE, Check Valve ***
2	J812 3572	AR			REPAIR PACKAGE, Detent ***
3	J812 3571	AR			HANDLE PACKAGE ***
4	J812 3573	AR			O-RING PACKAGE ***
5	J213 0091	1			VALVE ASSEMBLY ***
6	J213 0093	1			VALVE ASSEMBLY ***
7	J010 3374	AR			PIN
8	J213 0158	AR			WASHER
9	J213 0150	AR			ROD PACKAGE ***
10	J213 0154	AR			CONNECTOR
11	J213 0156	AR			BRACKET
12	J045 5702	AR			SCREW
13	J213 0155	AR			GROMMET
14	J213 0157	AR			KNOB

MODEL CODES

16=Cherokee 2 Dr.(1981-83)
17=Cherokee 2 Dr.(1981-83)
73=Cherokee 2WD-2 Dr.(1984-86)
74=Cherokee 2WD-4 Dr.(1984-86)
18=Cherokee 4 Dr.(1981-83)
77=Cherokee 4WD-2 Dr.(1984-86)
78=Cherokee 4WD-4 Dr.(1984-86)
85=CJ-5 (1981-83)
86=CJ-6(1981)
87=CJ-7(1981-86)
88=CJ-8, Scrambler(1981-86)
64=Comanche 2WD-6 Ft. Box(1986)
66=Comanche 2WD-7 Ft. Box(1986)
63=Comanche 4WD-6 Ft. Box(1986)
65=Comanche 4WD-7 Ft. Box(1986)
15=Grand Wagoneer 4 Dr.(1984-86)
25=J-10 Truck 7 Ft. Box(1981-84)
26=J10 Truck 8 Ft. Box(1981-86)
27=J-20 Truck 8 Ft. Box(1981-86)
15=Wagoneer 4 Dr.(1981-83)
75=Wagoneer 4WD-4 Dr.(1984-86)

BODY
CJ=CJ-5, CJ-6, CJ-7, CJ-8, Scrambler(1981-86)
MJ=Comanche Pickup(1986)

STYLES
SJ=Wagoneer(1981-83), Grand Wagoneer(1984-86), Cherokee(1981-83), J-10, J-20(1981-86)
XJ=Wagoneer(1984-86), Cherokee(1984-86)

AR = Use as Required - = Non Illustrated Part P.A.R. = Paint as Required

« RETURN TO GROUP INDEX

SNOW PLOW OPERATING CONTROLS AND SWITCHES CJ, SJ CHEROKEE, SJ WAGONEER, J10, J20
Figure 13-2600

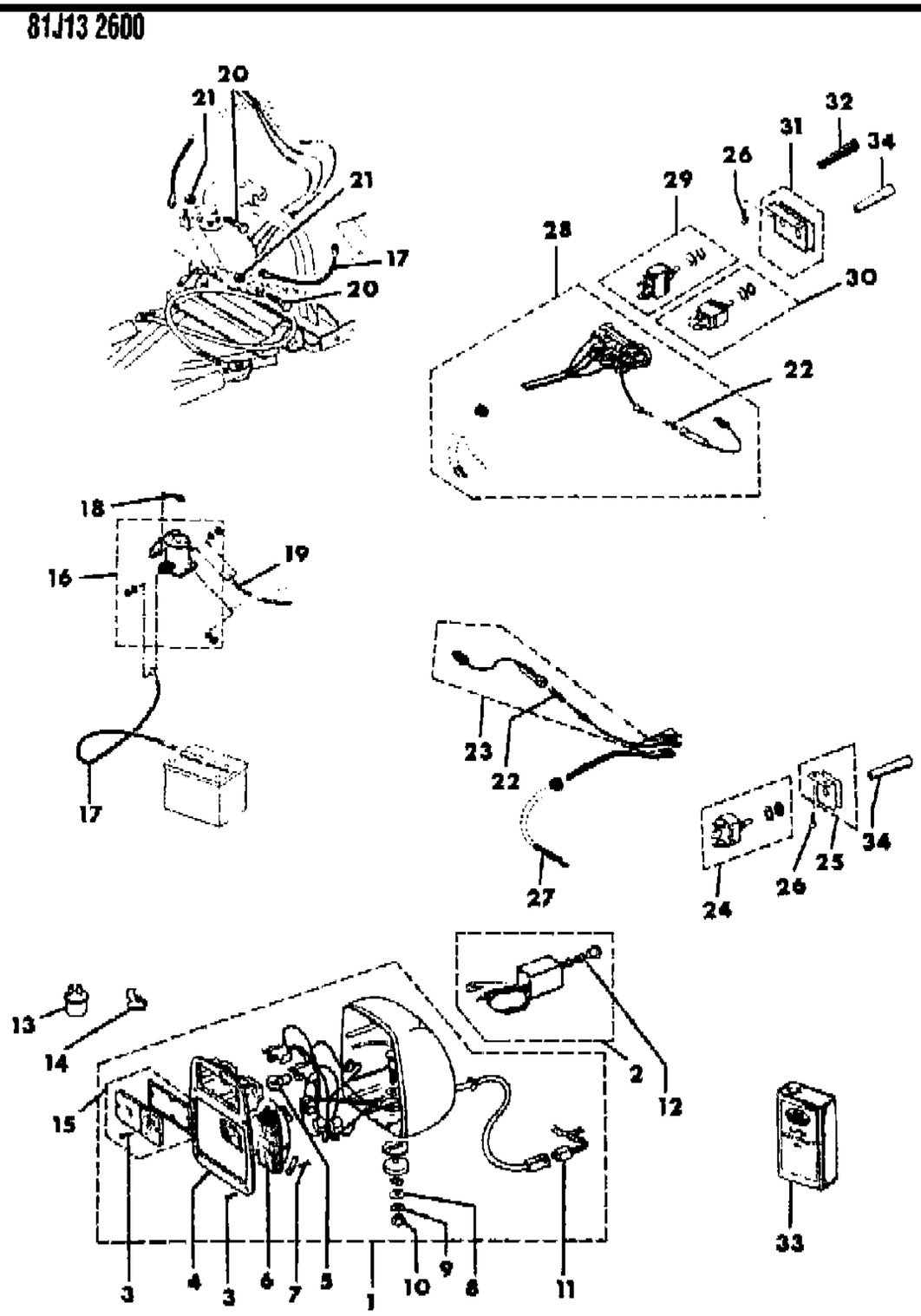

ITEM	PART NUMBER	QTY	BODY	MODEL	DESCRIPTION
1	J200 7855	2			HEADLAMP ASSEMBLY ***
2	J200 7860	1			SWITCH, Auxiliary Headlamp
3	S942 4317	AR			SCREW
4	J200 8484	2			BEZEL, Auxiliary Headlamp
5	J320 9544	2			BULB
6	J812 8683	2			BULB
7	J016 3162	2			SCREW
8	J012 0396	2			WASHER
9	S012 0384	2			WASHER
10	S012 0371	2			NUT
11	J200 7316	1			HARNESS
12	J013 1282	1			BULB
13	J545 2266	1			FLASHER, Turn Signal ***
14	J318 6888	1			CONNECTOR
15	J200 7861	2			LENS PACKAGE, Auxiliary Headlamp ***
16	J201 5370	1			SOLENOID ***
17	J200 5024	1			CABLE
18	J400 5737	2			SCREW
19	J200 5023	1			CABLE
20	J202 0145	2			BOLT
21	J202 0318	2			NUT
22	S010 6653	1			FUSE ***
23	J201 5484	1			FUSE AND WIRE ASSEMBLY ***
24	J202 1921	1			SWITCH, Snow Plow Raise/Lower
25	J201 5429	1			BRACKET, Snow Plow Switch
26	J448 9486	2			SCREW
27	J201 5483	1			HARNESS, Auxiliary Headlamp
28	J201 5478	1			HARNESS, Snow Plow Electrical
29	J202 1918	1			SWITCH, Snow Plow Raise/Lower
30	J202 1919	1			SWITCH, Snow Plow Angle
31	J201 5374	1			BRACKET, Snow Plow Switch
32	J201 5376	1			HANDLE, Raise/Lower Switch
33	J201 5134	1			FLUID, Hydraulic
34	J201 5375	1			HANDLE, Angle Switch

MODEL CODES
16=Cherokee 2 Dr.(1981-83)
17=Cherokee 2 Dr.(1981-83)
73=Cherokee 2WD-2 Dr.(1984-86)
74=Cherokee 2WD-4 Dr.(1984-86)
18=Cherokee 4 Dr.(1981-83)
77=Cherokee 4WD-2 Dr.(1984-86)
78=Cherokee 4WD-4 Dr.(1984-86)
85=CJ-5 (1981-83)
86=CJ-6(1981)
87=CJ-7(1981-86)
88=CJ-8, Scrambler(1981-86)
64=Comanche 2WD-6 Ft. Box(1986)
66=Comanche 2WD-7 Ft. Box(1986)
63=Comanche 4WD-6 Ft. Box(1986)
65=Comanche 4WD-7 Ft. Box(1986)
15=Grand Wagoneer 4 Dr.(1984-86)
25=J-10 Truck 7 Ft. Box(1981-84)
26=J10 Truck 8 Ft. Box(1981-86)
27=J-20 Truck 8 Ft. Box(1981-86)
15=Wagoneer 4 Dr.(1981-83)
75=Wagoneer 4WD-4 Dr.(1984-86)

BODY
CJ=CJ-5, CJ-6, CJ-7, CJ-8, Scrambler(1981-86)
MJ=Comanche Pickup(1986)

STYLES
SJ=Wagoneer(1981-83), Grand Wagoneer(1984-86), Cherokee(1981-83), J-10, J-20(1981-86)
XJ=Wagoneer(1984-86), Cherokee(1984-86)

AR = Use as Required - = Non Illustrated Part P.A.R. = Paint as Required

« RETURN TO GROUP INDEX

SNOW PLOW MOLDBOARD AND MOUNTING CJ
Figure 13-2700

81J13 2700

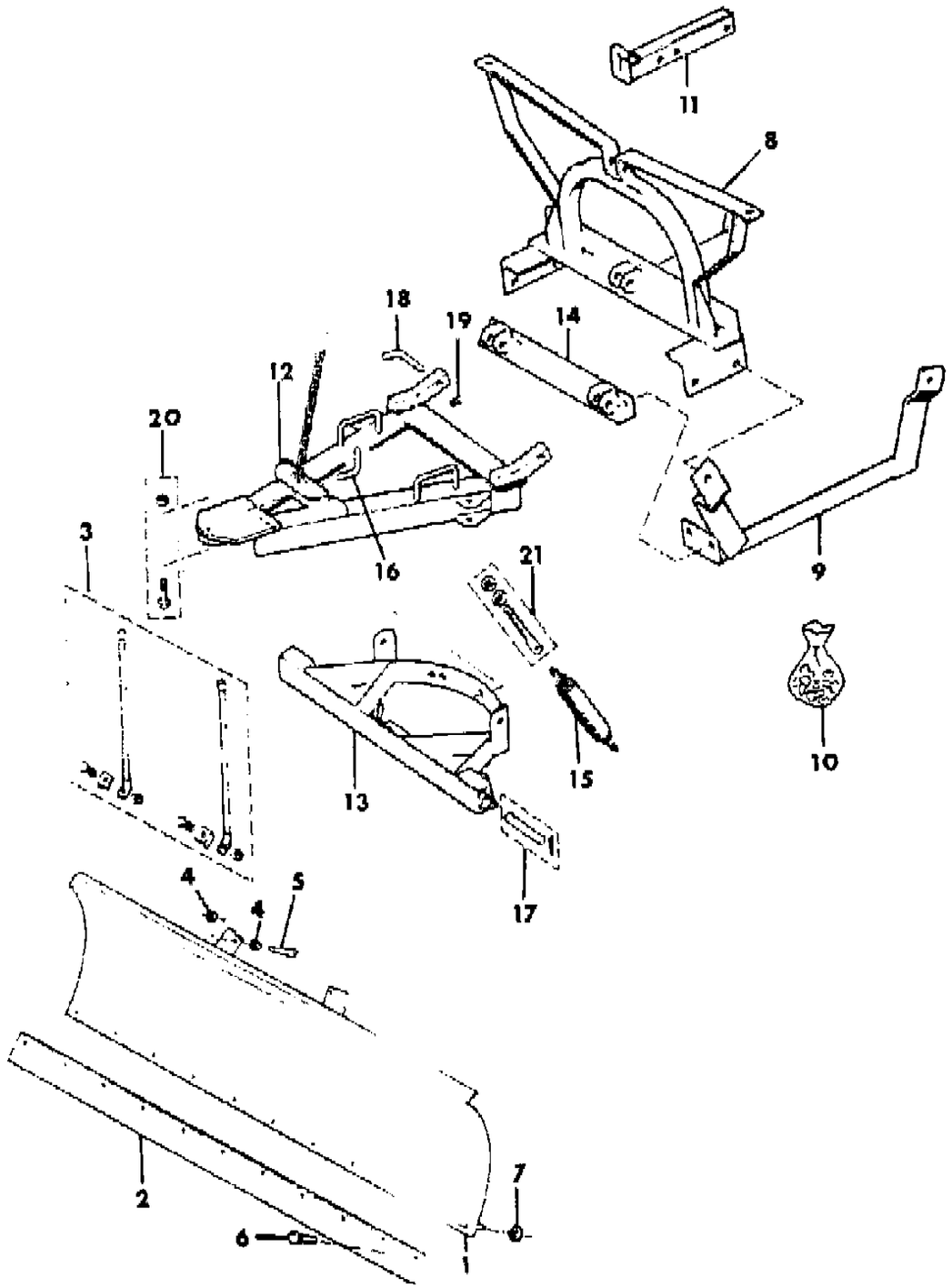

ITEM	PART NUMBER	QTY	BODY	MODEL	DESCRIPTION
1	J200 9158	1			MOLDBOARD ASSEMBLY ***
2	J200 9131	1			BLADE, Moldboard
3	J200 9916	1			INDICATOR PACKAGE, Snow Plow Marker ***
4	J202 0318	16			NUT, Lock
5	J201 2150	2			NUT
6	J201 2943	11			BOLT
7	J202 0307	15			NUT, Lock
8	J201 0371	1			FRAME, Snow Plow Lift
9	J201 0350-1	1			FRAME, Snow Plow Side
10					HARDWARE PACKAGE
	J200 8346	1			Lift Frame
	J200 8166	1			A-Frame
11	J201 0514	1			ARM, Snow Plow Lift
12	J201 3299	1			A-FRAME, Snow Plow
13	J201 2366	1			SECTOR, Snow Plow ***
14	J201 4618	1			FRAME, Snow Plow Clevis
15	J200 7017	2			SPRING, Snow Plow Trip
16	J201 3003	1			PIN, Shear
17	J200 9119	2			PIN PACKAGE
18	J200 8407	2			PIN, Hinge
19	J200 8408	2			PIN, Cotter
20	J200 9122	1			BOLT
21	J200 9124	3			BOLT, Eye

MODEL CODES

16=Cherokee 2 Dr.(1981-83)
17=Cherokee 2 Dr.(1981-83)
73=Cherokee 2WD-2 Dr.(1984-86)
74=Cherokee 2WD-4 Dr.(1984-86)
18=Cherokee 4 Dr.(1981-83)
77=Cherokee 4WD-2 Dr.(1984-86)
78=Cherokee 4WD-4 Dr.(1984-86)
85=CJ-5 (1981-83)
86=CJ-6(1981)
87=CJ-7(1981-86)
88=CJ-8, Scrambler(1981-86)
64=Comanche 2WD-6 Ft. Box(1986)
66=Comanche 2WD-7 Ft. Box(1986)
63=Comanche 4WD-6 Ft. Box(1986)
65=Comanche 4WD-7 Ft. Box(1986)
15=Grand Wagoneer 4 Dr.(1984-86)
25=J-10 Truck 7 Ft. Box(1981-84)
26=J10 Truck 8 Ft. Box(1981-86)
27=J-20 Truck 8 Ft. Box(1981-86)
15=Wagoneer 4 Dr.(1981-83)
75=Wagoneer 4WD-4 Dr.(1984-86)

BODY
CJ=CJ-5, CJ-6, CJ-7, CJ-8, Scrambler(1981-86)
MJ=Comanche Pickup(1986)

STYLES
SJ=Wagoneer(1981-83), Grand Wagoneer(1984-86), Cherokee(1981-83), J-10, J-20(1981-86)
XJ=Wagoneer(1984-86), Cherokee(1984-86)

AR = Use as Required - = Non Illustrated Part P.A.R. = Paint as Required

« RETURN TO GROUP INDEX

SNOW PLOW - POWER ANGLING CYLINDERS CJ, XJ CHEROKEE, XJ WAGONEER, COMANCHE, SJ CHEROKEE, SJ WAGONEER, J10, J20
Figure 13-2800

81J13 2800

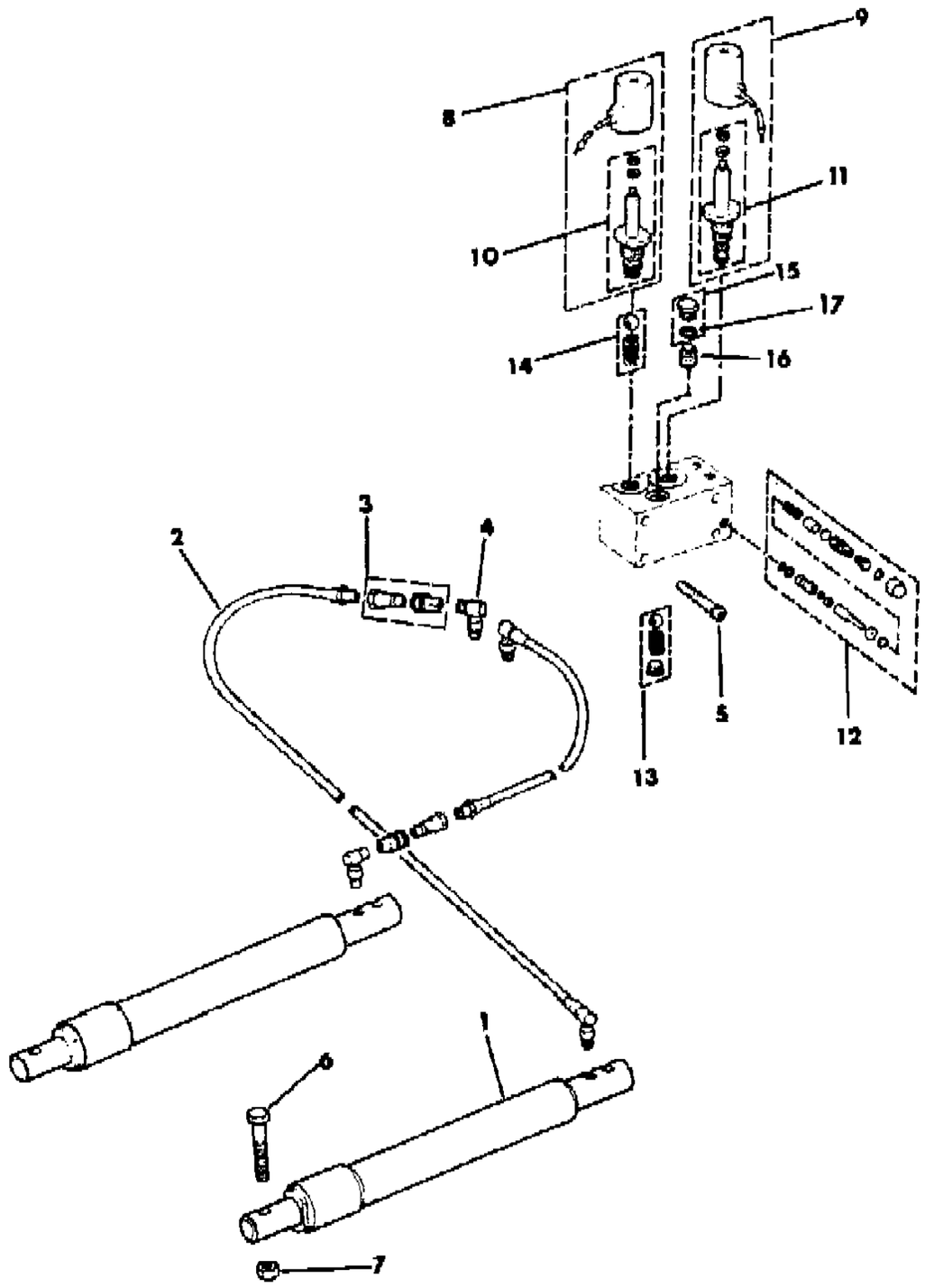

ITEM	PART NUMBER	QTY	BODY	MODEL	DESCRIPTION
1	J200 5810	2			RAM, Power Angling
2	J202 1856	1			HOSE ASSEMBLY ***
3	J201 5072	2			COUPLING PACKAGE ***
4	J202 1855	2			FITTING, Swivel ***
5	J202 1826	4			SCREW
6	S027 1730	4			BOLT
7	J202 0318	4			NUT, Lock
8	J201 5357	1			SOLENOID, Valve ***
9	J201 5358	1			SOLENOID, Valve ***
10	J999 4667	1			VALVE, Cartridge
11	J999 4666	1			VALVE, Cartridge
12	J201 5606	1			VALVE PACKAGE, Crossover ***
13	J201 5639	1			VALVE PACKAGE, Check ***
14	J201 5576	1			VALVE PACKAGE, Check ***
15	J201 5359	1			PLUG
16	J201 5609	1			PISTON ***
17	J201 5126	1			O-RING ***

MODEL CODES

16=Cherokee 2 Dr.(1981-83)
17=Cherokee 2 Dr.(1981-83)
73=Cherokee 2WD-2 Dr.(1984-86)
74=Cherokee 2WD-4 Dr.(1984-86)
18=Cherokee 4 Dr.(1981-83)
77=Cherokee 4WD-2 Dr.(1984-86)
78=Cherokee 4WD-4 Dr.(1984-86)
85=CJ-5 (1981-83)
86=CJ-6(1981)
87=CJ-7(1981-86)
88=CJ-8, Scrambler(1981-86)
64=Comanche 2WD-6 Ft. Box(1986)
66=Comanche 2WD-7 Ft. Box(1986)
63=Comanche 4WD-6 Ft. Box(1986)
65=Comanche 4WD-7 Ft. Box(1986)
15=Grand Wagoneer 4 Dr.(1984-86)
25=J-10 Truck 7 Ft. Box(1981-84)
26=J10 Truck 8 Ft. Box(1981-86)
27=J-20 Truck 8 Ft. Box(1981-86)
15=Wagoneer 4 Dr.(1981-83)
75=Wagoneer 4WD-4 Dr.(1984-86)

BODY
CJ=CJ-5, CJ-6, CJ-7, CJ-8, Scrambler(1981-86)
MJ=Comanche Pickup(1986)

STYLES
SJ=Wagoneer(1981-83), Grand Wagoneer(1984-86), Cherokee(1981-83), J-10, J-20(1981-86)
XJ=Wagoneer(1984-86), Cherokee(1984-86)

AR = Use as Required - = Non Illustrated Part P.A.R. = Paint as Required

« RETURN TO GROUP INDEX

MOUNTING HARDWARE PICKUP BOX COMANCHE
Figure 13-2900

81J13 2900

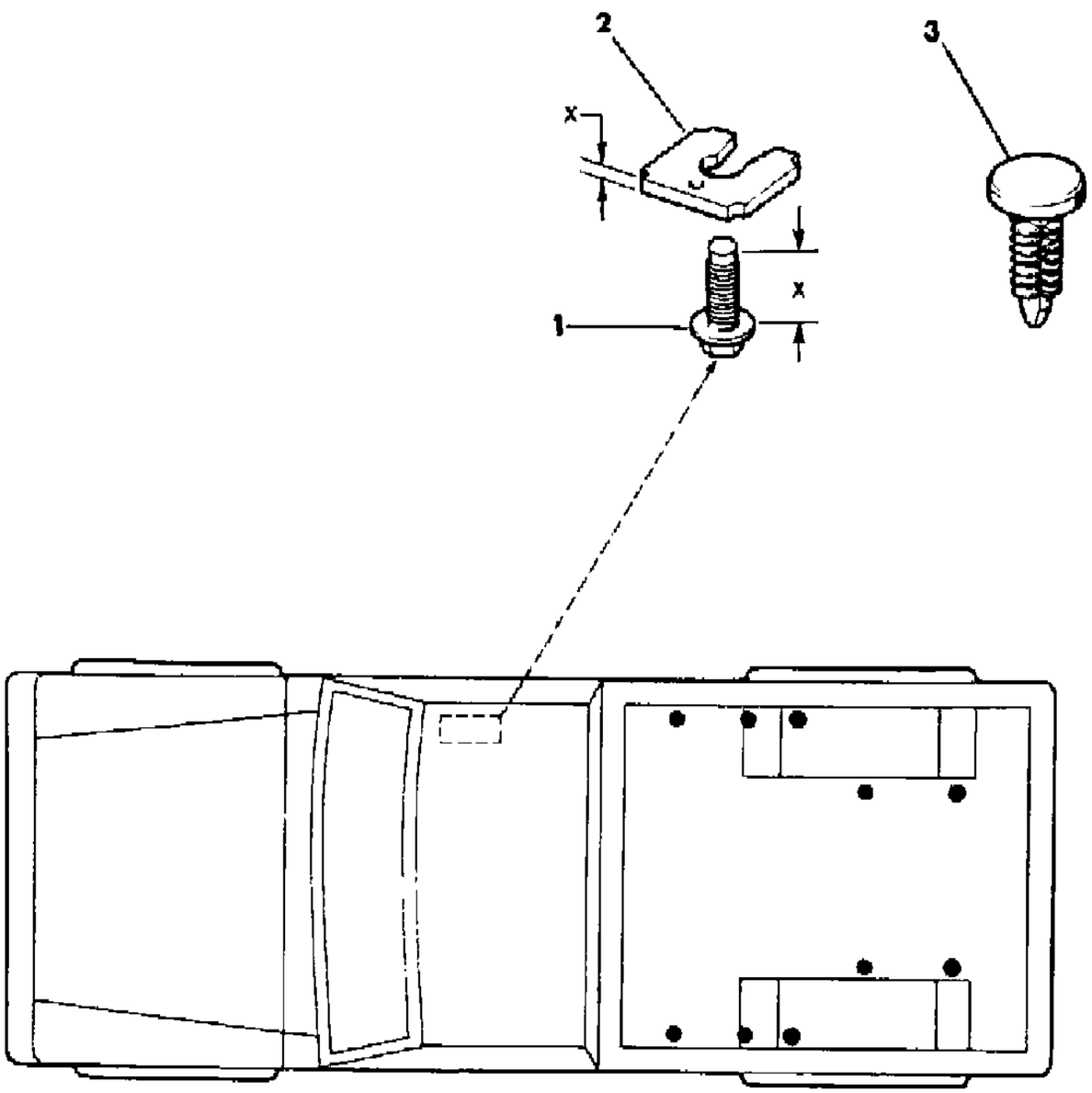

ITEM	PART NUMBER	QTY	BODY	MODEL	DESCRIPTION
1					BOLT
	S150 2788	8			25mm long, 10.9 Hardness
	1150 2606	2			25mm long, 8.8 Hardness
	1150 2685	2			20mm long, 8.8 Hardness
2					SHIM
	5500 6628	AR			4mm
	5500 6645	AR			1mm
3	3420 1545	AR			CLIP

MODEL CODES

16=Cherokee 2 Dr.(1981-83)	78=Cherokee 4WD-4 Dr.(1984-86)	64=Comanche 2WD-6 Ft. Box(1986)	25=J-10 Truck 7 Ft. Box(1981-84)
17=Cherokee 2 Dr.(1981-83)	85=CJ-5 (1981-83)	66=Comanche 2WD-7 Ft. Box(1986)	26=J10 Truck 8 Ft. Box(1981-86)
73=Cherokee 2WD-2 Dr.(1984-86)	86=CJ-6(1981)	63=Comanche 4WD-6 Ft. Box(1986)	27=J-20 Truck 8 Ft. Box(1981-86)
74=Cherokee 2WD-4 Dr.(1984-86)	87=CJ-7(1981-86)	65=Comanche 4WD-7 Ft. Box(1986)	15=Wagoneer 4 Dr.(1981-83)
18=Cherokee 4 Dr.(1981-83)	88=CJ-8, Scrambler(1981-86)	15=Grand Wagoneer 4 Dr.(1984-86)	75=Wagoneer 4WD-4 Dr.(1984-86)
77=Cherokee 4WD-2 Dr.(1984-86)			

BODY
CJ=CJ-5, CJ-6, CJ-7, CJ-8, Scrambler(1981-86)
MJ=Comanche Pickup(1986)

STYLES
SJ=Wagoneer(1981-83), Grand Wagoneer(1984-86), Cherokee(1981-83), J-10, J-20(1981-86)
XJ=Wagoneer(1984-86), Cherokee(1984-86)

AR = Use as Required - = Non Illustrated Part P.A.R. = Paint as Required

« RETURN TO GROUP INDEX

BUMPER, FRONT XJ CHEROKEE, XJ WAGONEER, COMANCHE
Figure 13-3000

81J13 3000

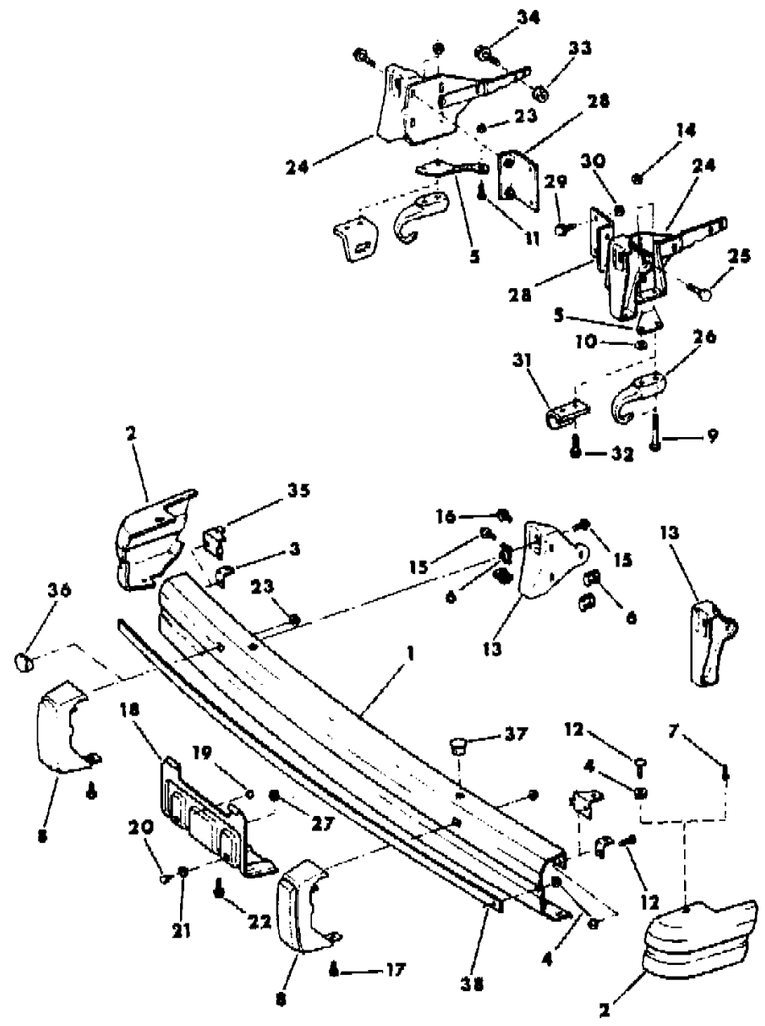

ITEM	PART NUMBER	QTY	BODY	MODEL	DESCRIPTION
1					RAIL, Bumper
	5200 0185	1			BLACK, Modification Required
	5200 0177	1			CHROME, Modification Required
2	5200 0178-9	1			EXTENSION, Rail, Black
3	5200 0692	2			BRACKET, Support
4	1150 3750	8			NUT
5					BRACE
	5200 0764-5	1			1984
	5200 1972-3	1			1985-86
6	1150 0662	8			NUT
7	3420 1631	2			RIVET
8	5200 0462-3	1			GUARD, Bumper
9	1150 5098	4			BOLT
10	1150 0257	2			WASHER
11	3420 1596	2			BOLT
12	3420 1970	8			SCREW
13	5200 0488-9	1			BRACKET, Mounting
14	1150 2813	AR			NUT
15	1150 2606	6			BOLT
16					BOLT
	3420 1540	4			1984
	3420 2037	4			1985-86: Modification Required
17	3420 1379	2			BOLT
18	5200 0456	1			BRACKET, License
19	5200 0457	1			BUMPER, License
20	J400 5466	2			SCREW
21	J400 0141	2			NUT
22	3420 1736	2			BOLT
23	1150 2811	2			NUT
24	5200 0746-7	1			BRACKET, Mounting
25	1150 2689	4			BOLT
26	5200 0710	2			HOOK, Tow
27	1150 2729	2			NUT
28	5200 1976-7	1			BRACKET, Support: 1985-86
29	J420 0434	4			BOLT: 1985-86 ***
30	1150 1033	4			NUT: 1985-86 ***
31	5200 1644	2			EYE, Towing, EXPORT: 1985-86 ***
32	3420 1389	4			BOLT, EXPORT: 1985-86
33					NUT

MODEL CODES

16=Cherokee 2 Dr.(1981-83)
17=Cherokee 2 Dr.(1981-83)
73=Cherokee 2WD-2 Dr.(1984-86)
74=Cherokee 2WD-4 Dr.(1984-86)
18=Cherokee 4 Dr.(1981-83)
77=Cherokee 4WD-2 Dr.(1984-86)
78=Cherokee 4WD-4 Dr.(1984-86)
85=CJ-5 (1981-83)
86=CJ-6(1981)
87=CJ-7(1981-86)
88=CJ-8, Scrambler(1981-86)
64=Comanche 2WD-6 Ft. Box(1986)
66=Comanche 2WD-7 Ft. Box(1986)
63=Comanche 4WD-6 Ft. Box(1986)
65=Comanche 4WD-7 Ft. Box(1986)
15=Grand Wagoneer 4 Dr.(1984-86)
25=J-10 Truck 7 Ft. Box(1981-84)
26=J10 Truck 8 Ft. Box(1981-86)
27=J-20 Truck 8 Ft. Box(1981-86)
15=Wagoneer 4 Dr.(1981-83)
75=Wagoneer 4WD-4 Dr.(1984-86)

BODY
CJ=CJ-5, CJ-6, CJ-7, CJ-8, Scrambler(1981-86)
MJ=Comanche Pickup(1986)

STYLES
SJ=Wagoneer(1981-83), Grand Wagoneer(1984-86), Cherokee(1981-83), J-10, J-20(1981-86)
XJ=Wagoneer(1984-86), Cherokee(1984-86)

AR = Use as Required - = Non Illustrated Part P.A.R. = Paint as Required

BUMPER, FRONT XJ CHEROKEE, XJ WAGONEER, COMANCHE
Figure 13-3000

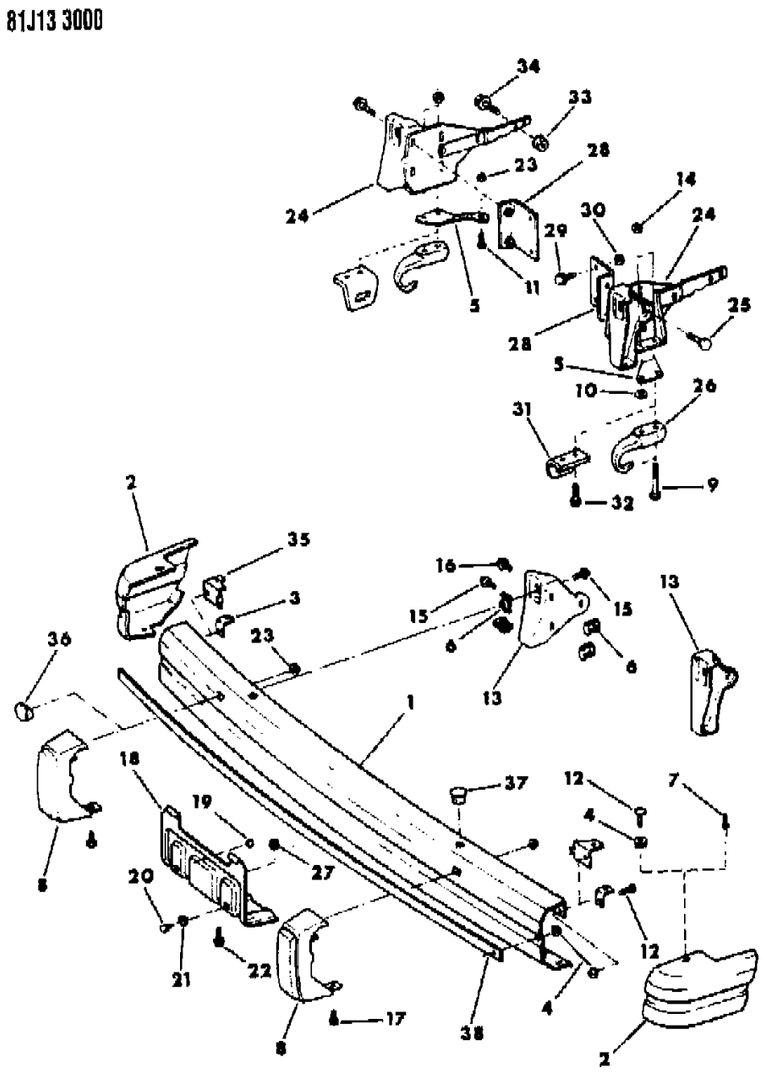

ITEM	PART NUMBER	QTY	BODY	MODEL	DESCRIPTION
	1150 2814	2			1984-85
	3420 2656	1			1986: Right
	1150 2814	1			1986: Left
34					BOLT
	3420 2388	2			1984-85
	3420 2661	1			1986: Right
	3420 2388	1			1986: Left
35	5200 2730-1	1			BRACKET, Support
36	3420 2319	2			PLUG
37	3420 2321	2			PLUG
38	5501 8777	1			INSERT, Rail Gold/Black, Modification Required

MODEL CODES

16=Cherokee 2 Dr.(1981-83)
17=Cherokee 2 Dr.(1981-83)
73=Cherokee 2WD-2 Dr.(1984-86)
74=Cherokee 2WD-4 Dr.(1984-86)
18=Cherokee 4 Dr.(1981-83)
77=Cherokee 4WD-2 Dr.(1984-86)
78=Cherokee 4WD-4 Dr.(1984-86)
85=CJ-5 (1981-83)
86=CJ-6(1981)
87=CJ-7(1981-86)
88=CJ-8, Scrambler(1981-86)
64=Comanche 2WD-6 Ft. Box(1986)
66=Comanche 2WD-7 Ft. Box(1986)
63=Comanche 4WD-6 Ft. Box(1986)
65=Comanche 4WD-7 Ft. Box(1986)
15=Grand Wagoneer 4 Dr.(1984-86)
25=J-10 Truck 7 Ft. Box(1981-84)
26=J10 Truck 8 Ft. Box(1981-86)
27=J-20 Truck 8 Ft. Box(1981-86)
15=Wagoneer 4 Dr.(1981-83)
75=Wagoneer 4WD-4 Dr.(1984-86)

BODY
CJ=CJ-5, CJ-6, CJ-7, CJ-8, Scrambler(1981-86)
MJ=Comanche Pickup(1986)

STYLES
SJ=Wagoneer(1981-83), Grand Wagoneer(1984-86), Cherokee(1981-83), J-10, J-20(1981-86)
XJ=Wagoneer(1984-86), Cherokee(1984-86)

AR = Use as Required - = Non Illustrated Part P.A.R. = Paint as Required

« RETURN TO GROUP INDEX

BUMPER, REAR XJ CHEROKEE, XJ WAGONEER, COMANCHE
Figure 13-3100

81J13 3100B

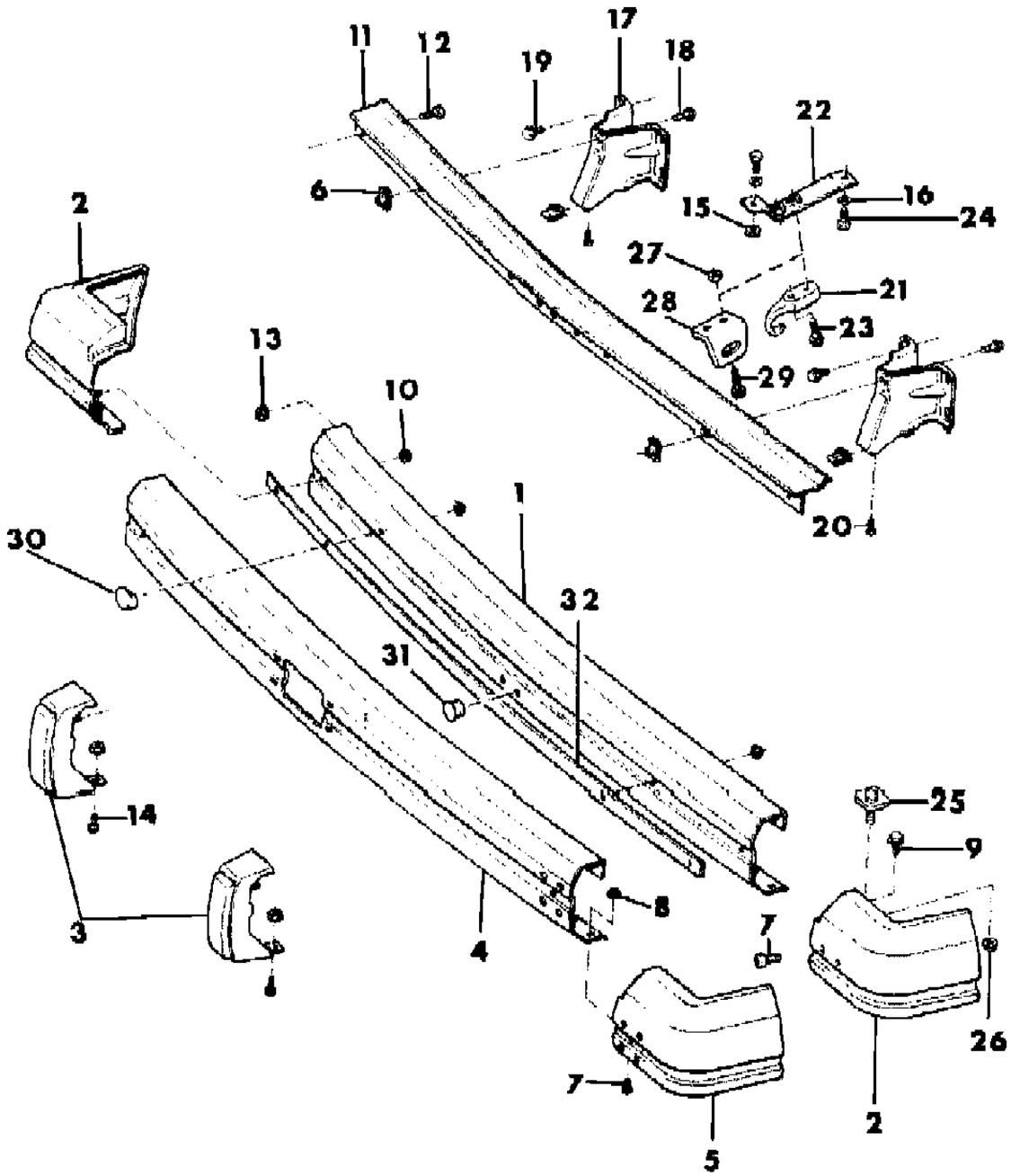

ITEM	PART NUMBER	QTY	BODY	MODEL	DESCRIPTION
1					RAIL, Bumper
	5200 0199	1			Black, Modification Required
	5200 0190	1			Chrome, Modification Required
2	5200 0192-3	1			EXTENSION, Rail
3	5200 0468-9	1			GUARD, Bumper
4					RAIL, Bumper
	5200 0645	1			Black, Modification Required
	5200 0644	1			Chrome, Modification Required
5	5200 0654	1			EXTENSION, Rail
6	1150 0662	4			NUT
7	3420 1970	4			SCREW
8	1150 3750	4			NUT
9	3420 1736	2			BOLT
10	1150 2811	4			NUT
11					SHIELD, Bumper Rail
	5200 1072	1			1984-85
	5200 3092	1			1986
12	S150 2971	4			SCREW
13	3420 1461	4			NUT
14	3420 1033	2			BOLT
15	1150 1060	2			NUT
16	1150 0257	2			WASHER
17	5200 0290	2			BRACKET, Mounting
18	1150 2606	2			BOLT
19	3420 1540	8			BOLT
20	3420 1379	2			BOLT
21	5200 0710	1			HOOK, Tow
22	5200 0712	1			BRACKET, Tow
23					BOLT
	S150 4695	2			1984
	3420 1386	AR			1985-86
24	1150 3480	2			BOLT
25	5200 1384	2			PLATE
26	3420 1918	4			NUT
27	1150 2813	AR			NUT, 1985-86
28	5200 1644	1			EYE, Towing, EXPORT: 1985-86 ***
29	3420 1389	2			BOLT, EXPORT: 1985-86
30	3420 2319	2			PLUG
31	3420 2320	2			PLUG

MODEL CODES

16=Cherokee 2 Dr.(1981-83)
17=Cherokee 2 Dr.(1981-83)
73=Cherokee 2WD-2 Dr.(1984-86)
74=Cherokee 2WD-4 Dr.(1984-86)
18=Cherokee 4 Dr.(1981-83)
77=Cherokee 4WD-2 Dr.(1984-86)
78=Cherokee 4WD-4 Dr.(1984-86)
85=CJ-5 (1981-83)
86=CJ-6(1981)
87=CJ-7(1981-86)
88=CJ-8, Scrambler(1981-86)
64=Comanche 2WD-6 Ft. Box(1986)
66=Comanche 2WD-7 Ft. Box(1986)
63=Comanche 4WD-6 Ft. Box(1986)
65=Comanche 4WD-7 Ft. Box(1986)
15=Grand Wagoneer 4 Dr.(1984-86)
25=J-10 Truck 7 Ft. Box(1981-84)
26=J10 Truck 8 Ft. Box(1981-86)
27=J-20 Truck 8 Ft. Box(1981-86)
15=Wagoneer 4 Dr.(1981-83)
75=Wagoneer 4WD-4 Dr.(1984-86)

BODY
CJ=CJ-5, CJ-6, CJ-7, CJ-8, Scrambler(1981-86)
MJ=Comanche Pickup(1986)

STYLES
SJ=Wagoneer(1981-83), Grand Wagoneer(1984-86), Cherokee(1981-83), J-10, J-20(1981-86)
XJ=Wagoneer(1984-86), Cherokee(1984-86)

AR = Use as Required - = Non Illustrated Part P.A.R. = Paint as Required

« RETURN TO GROUP INDEX »

BUMPER, REAR XJ CHEROKEE, XJ WAGONEER, COMANCHE
Figure 13-3100

81J13 3100B

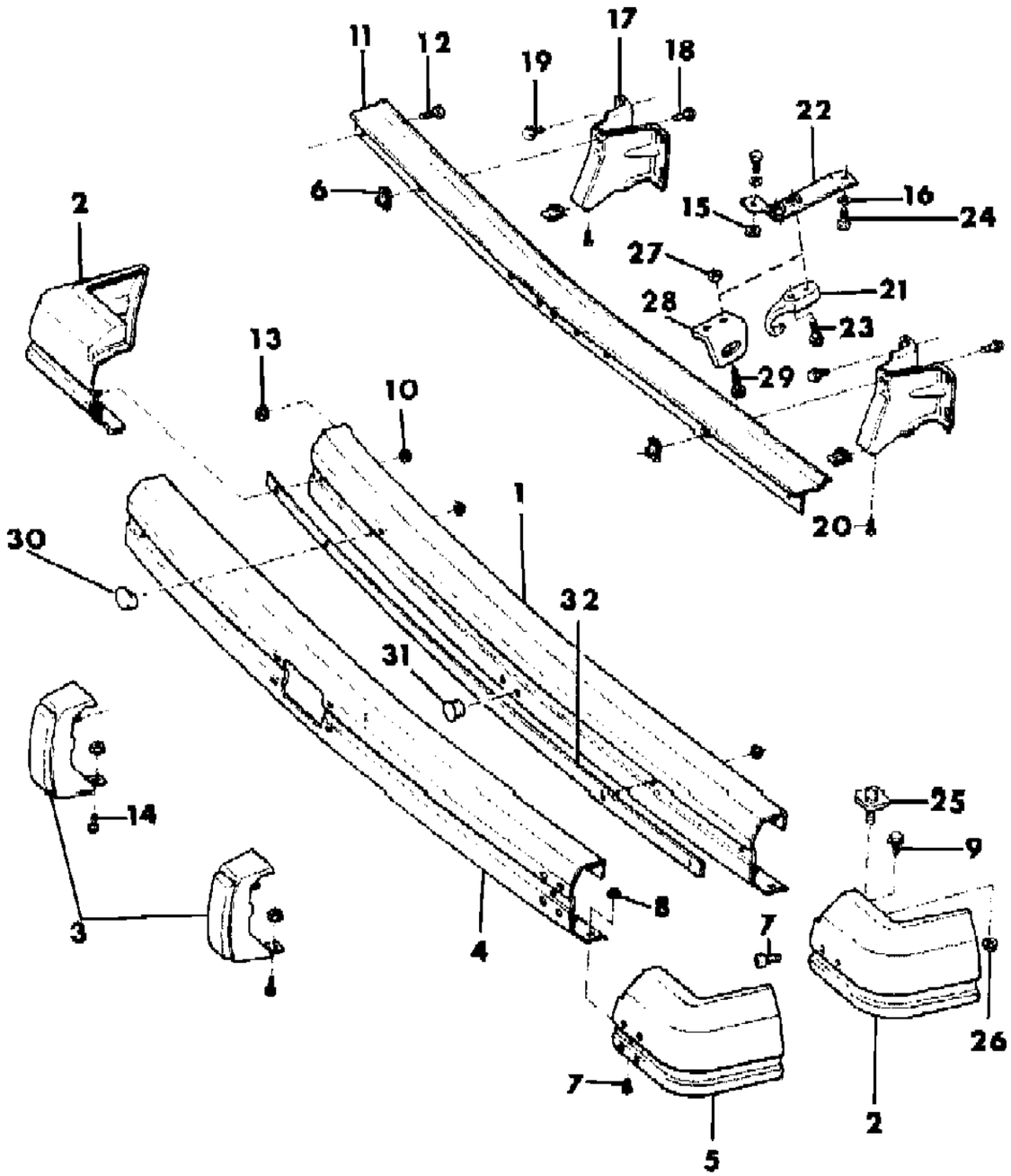

ITEM	PART NUMBER	QTY	BODY	MODEL	DESCRIPTION
32	5501 8777	1			INSERT. Rail, Gold/Black ***

MODEL CODES

16=Cherokee 2 Dr.(1981-83)
17=Cherokee 2 Dr.(1981-83)
73=Cherokee 2WD-2 Dr.(1984-86)
74=Cherokee 2WD-4 Dr.(1984-86)
18=Cherokee 4 Dr.(1981-83)
77=Cherokee 4WD-2 Dr.(1984-86)
78=Cherokee 4WD-4 Dr.(1984-86)
85=CJ-5 (1981-83)
86=CJ-6(1981)
87=CJ-7(1981-86)
88=CJ-8, Scrambler(1981-86)
64=Comanche 2WD-6 Ft. Box(1986)
66=Comanche 2WD-7 Ft. Box(1986)
63=Comanche 4WD-6 Ft. Box(1986)
65=Comanche 4WD-7 Ft. Box(1986)
15=Grand Wagoneer 4 Dr.(1984-86)
25=J-10 Truck 7 Ft. Box(1981-84)
26=J10 Truck 8 Ft. Box(1981-86)
27=J-20 Truck 8 Ft. Box(1981-86)
15=Wagoneer 4 Dr.(1981-83)
75=Wagoneer 4WD-4 Dr.(1984-86)

BODY
CJ=CJ-5, CJ-6, CJ-7, CJ-8, Scrambler(1981-86)
MJ=Comanche Pickup(1986)

STYLES
SJ=Wagoneer(1981-83), Grand Wagoneer(1984-86), Cherokee(1981-83), J-10, J-20(1981-86)
XJ=Wagoneer(1984-86), Cherokee(1984-86)

AR = Use as Required - = Non Illustrated Part P.A.R. = Paint as Required

« RETURN TO GROUP INDEX

BUMPER, REAR STEP COMMANCHE
Figure 13-3200

81J13 3200 A

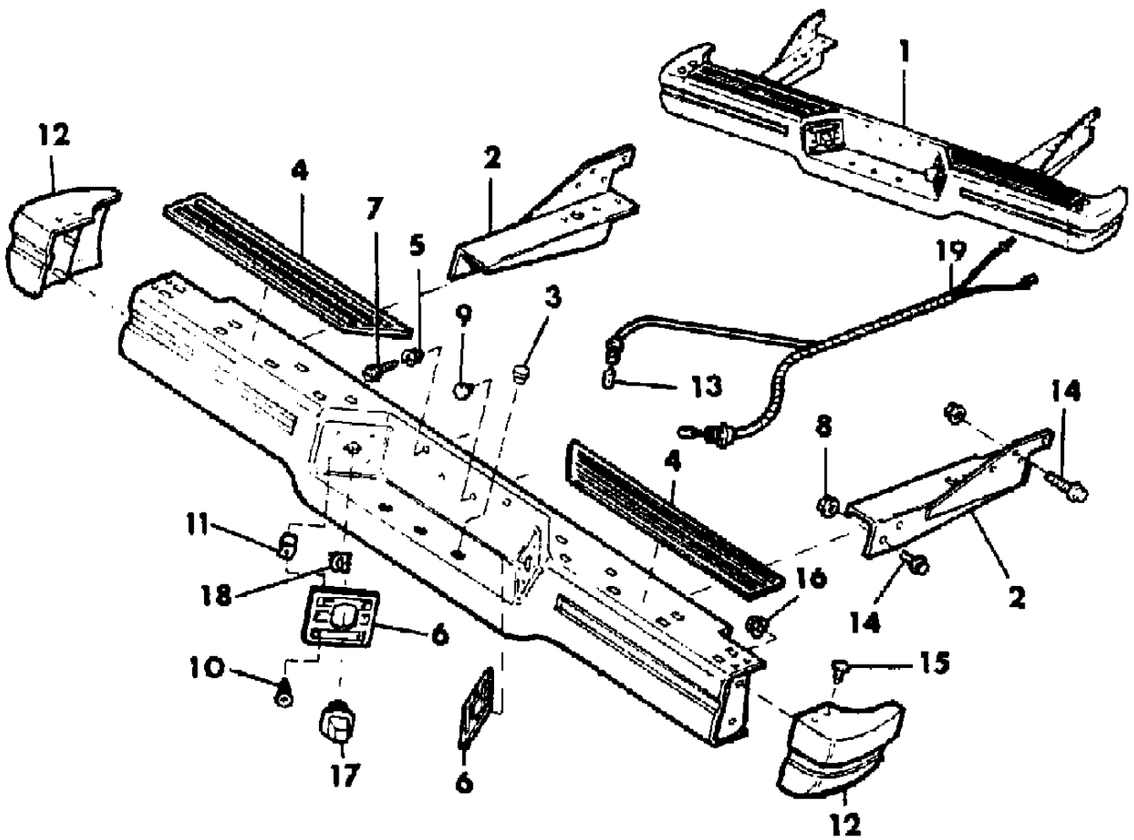

ITEM	PART NUMBER	QTY	BODY	MODEL	DESCRIPTION
1					RAIL PACKAGE, Bumper ***
	8220 0307	1			Black
	8220 0306	1			Chrome
2	5200 1778-9	1			BRACKET, Mounting
3	8350 3587	3			PLUG
4	5200 0792-3	1			PLATE, Anti Skid
5	J400 6367	2			NUT
6	5200 1776-7	1			PLATE, Cover
7	1150 0079	2			SCREW
8	1150 2812	4			NUT
9	J400 4227	4			BUMPER
10	3420 1985	8			SCREW
11	3420 1263	8			NUT
12	5200 1706-7	1			CAP, End
13	J942 1330	2			BULB
14	3420 1991	16			BOLT
15	J400 6966	4			FASTENER
16	J400 6080	4			NUT
17		2			LAMP, License
	5600 1343	2			Black
	5600 1206	2			Chrome
18	5600 1312	2			CLIP, Retaining
19	5600 1054	1			HARNESS, License Plate Light

MODEL CODES
16=Cherokee 2 Dr.(1981-83)
17=Cherokee 2 Dr.(1981-83)
73=Cherokee 2WD-2 Dr.(1984-86)
74=Cherokee 2WD-4 Dr.(1984-86)
18=Cherokee 4 Dr.(1981-83)
77=Cherokee 4WD-2 Dr.(1984-86)
78=Cherokee 4WD-4 Dr.(1984-86)
85=CJ-5 (1981-83)
86=CJ-6(1981)
87=CJ-7(1981-86)
88=CJ-8, Scrambler(1981-86)
64=Comanche 2WD-6 Ft. Box(1986)
66=Comanche 2WD-7 Ft. Box(1986)
63=Comanche 4WD-6 Ft. Box(1986)
65=Comanche 4WD-7 Ft. Box(1986)
15=Grand Wagoneer 4 Dr.(1984-86)
25=J-10 Truck 7 Ft. Box(1981-84)
26=J10 Truck 8 Ft. Box(1981-86)
27=J-20 Truck 8 Ft. Box(1981-86)
15=Wagoneer 4 Dr.(1981-83)
75=Wagoneer 4WD-4 Dr.(1984-86)

BODY
CJ=CJ-5, CJ-6, CJ-7, CJ-8, Scrambler(1981-86)
MJ=Comanche Pickup(1986)

STYLES
SJ=Wagoneer(1981-83), Grand Wagoneer(1984-86), Cherokee(1981-83), J-10, J-20(1981-86)
XJ=Wagoneer(1984-86), Cherokee(1984-86)

AR = Use as Required - = Non Illustrated Part P.A.R. = Paint as Required

« RETURN TO GROUP INDEX

WINCH CONTROLS HIDDEN WINCH XJ CHEROKEE, XJ WAGONEER, COMANCHE
Figure 13-3300

81J13 3300

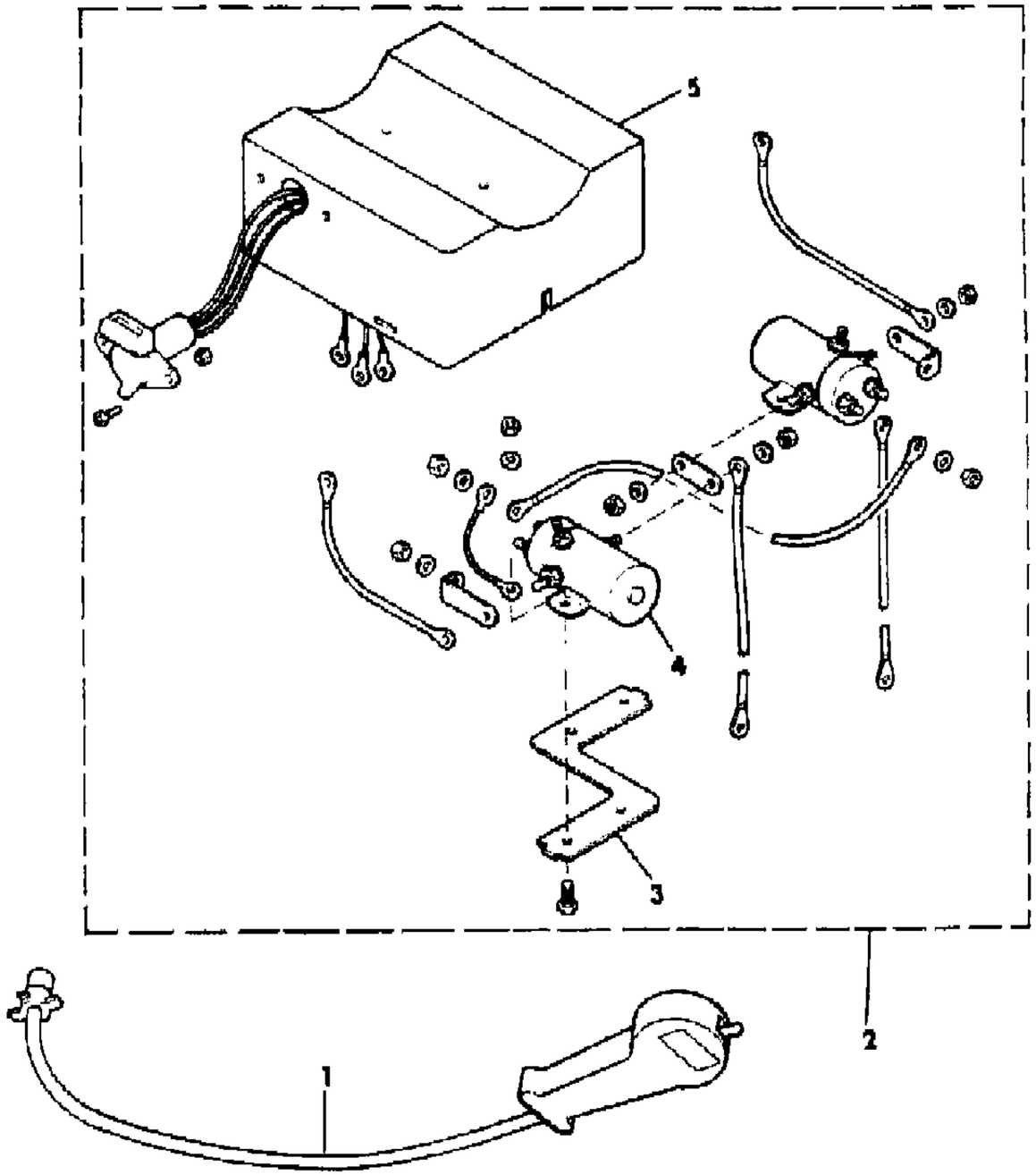

ITEM	PART NUMBER	QTY	BODY	MODEL	DESCRIPTION
1	8350 2231	1			SWITCH ASSEMBLY, Winch ***
2	8351 0141	1			SOLENOID ASSEMBLY, Winch ***
3	8351 0140	1			BRACKET, Solenoid Mounting
4	8351 0139	2			SOLENOID ***
5	8351 0138	1			COVER, Solenoid

MODEL CODES
16=Cherokee 2 Dr.(1981-83)
17=Cherokee 2 Dr.(1981-83)
73=Cherokee 2WD-2 Dr.(1984-86)
74=Cherokee 2WD-4 Dr.(1984-86)
18=Cherokee 4 Dr.(1981-83)
77=Cherokee 4WD-2 Dr.(1984-86)
78=Cherokee 4WD-4 Dr.(1984-86)
85=CJ-5 (1981-83)
86=CJ-6(1981)
87=CJ-7(1981-86)
88=CJ-8, Scrambler(1981-86)
64=Comanche 2WD-6 Ft. Box(1986)
66=Comanche 2WD-7 Ft. Box(1986)
63=Comanche 4WD-6 Ft. Box(1986)
65=Comanche 4WD-7 Ft. Box(1986)
15=Grand Wagoneer 4 Dr.(1984-86)
25=J-10 Truck 7 Ft. Box(1981-84)
26=J10 Truck 8 Ft. Box(1981-86)
27=J-20 Truck 8 Ft. Box(1981-86)
15=Wagoneer 4 Dr.(1981-83)
75=Wagoneer 4WD-4 Dr.(1984-86)

BODY
CJ=CJ-5, CJ-6, CJ-7, CJ-8, Scrambler(1981-86)
MJ=Comanche Pickup(1986)

STYLES
SJ=Wagoneer(1981-83), Grand Wagoneer(1984-86), Cherokee(1981-83), J-10, J-20(1981-86)
XJ=Wagoneer(1984-86), Cherokee(1984-86)

AR = Use as Required - = Non Illustrated Part P.A.R. = Paint as Required

« RETURN TO GROUP INDEX

WINCH MOUNTING HIDDEN WINCH XJ CHEROKEE, XJ WAGONEER, COMANCHE
Figure 13-3400

81J13 3400

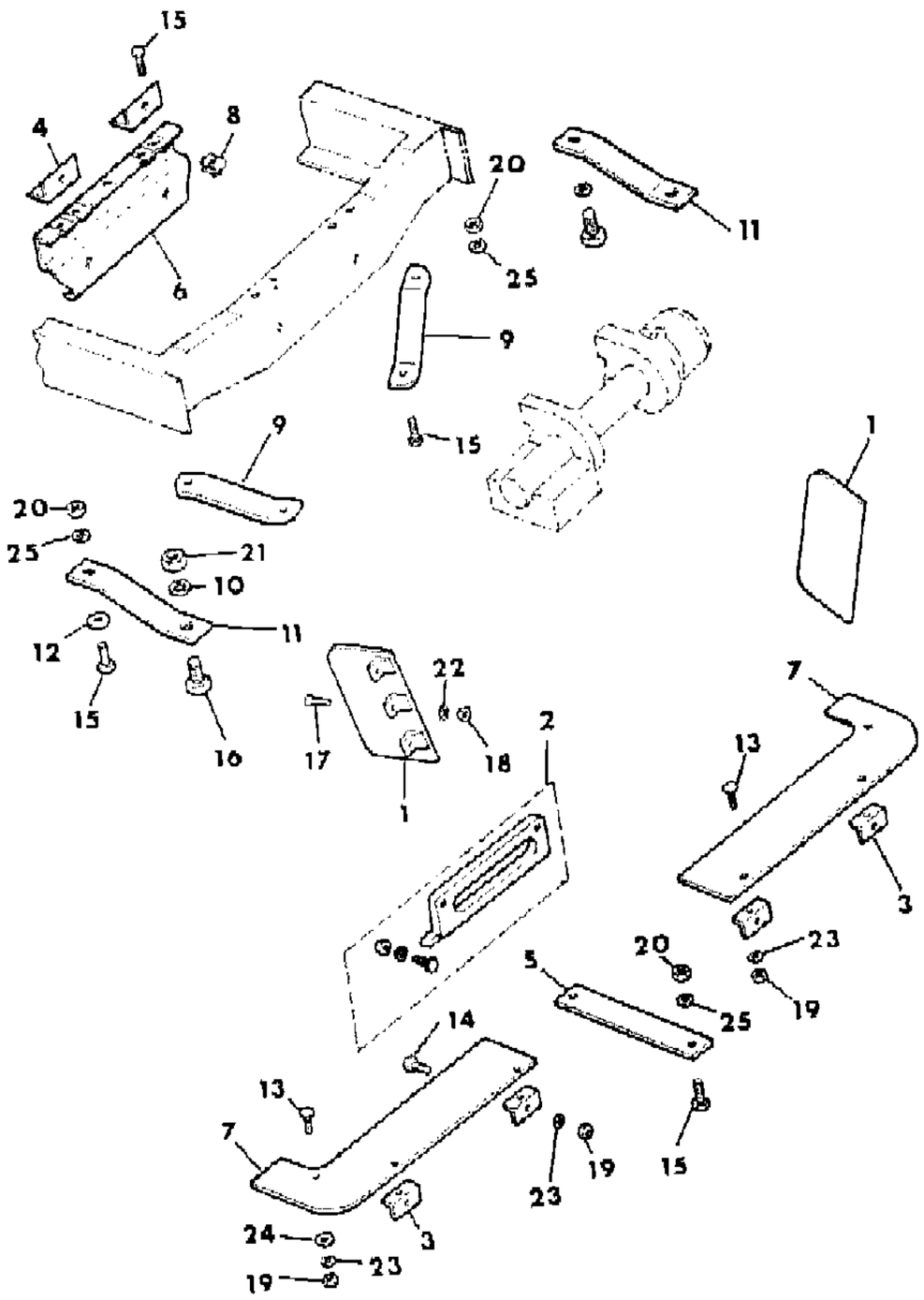

ITEM	PART NUMBER	QTY	BODY	MODEL	DESCRIPTION
1	8350 1124-5	1			EXTENSION, Rail
2	8350 2247	1			GUIDE, Solid Cable
3	8350 1126	4			BRACKET, Angle
4	8350 1127	2			BRACKET, Angle
5	8350 1128	1			RETAINER, Rail
6	8350 1129	1			BRACKET, Winch Mounting
7	8350 1130-1	1			SHIELD, Bumper Rail
8	8350 1136	4			NUT, U-Type
9	8350 1132-3	1			STRAP, Inner
10	S012 0384	2			WASHER, Lock
11	8350 1134-5	1			STRAP, Outer
12	J012 0393	2			WASHER, Plain
13	8350 1149	6			BOLT
14	J012 0887	4			BOLT
15	J018 0079	10			BOLT
16	J999 0112	2			BOLT
17	8350 1150	6			SCREW
18	J012 0361	6			NUT
19	J012 0375	10			NUT
20	J012 0376	6			NUT
21	S012 0378	2			NUT
22	S012 0217	6			WASHER, Lock
23	J012 0380	10			WASHER, Lock
24	J012 0392	2			WASHER, Plain
25	J012 0214	6			WASHER, Lock

MODEL CODES

16=Cherokee 2 Dr.(1981-83)
17=Cherokee 2 Dr.(1981-83)
73=Cherokee 2WD-2 Dr.(1984-86)
74=Cherokee 2WD-4 Dr.(1984-86)
18=Cherokee 4 Dr.(1981-83)
77=Cherokee 4WD-2 Dr.(1984-86)
78=Cherokee 4WD-4 Dr.(1984-86)
85=CJ-5 (1981-83)
86=CJ-6(1981)
87=CJ-7(1981-86)
88=CJ-8, Scrambler(1981-86)
64=Comanche 2WD-6 Ft. Box(1986)
66=Comanche 2WD-7 Ft. Box(1986)
63=Comanche 4WD-6 Ft. Box(1986)
65=Comanche 4WD-7 Ft. Box(1986)
15=Grand Wagoneer 4 Dr.(1984-86)
25=J-10 Truck 7 Ft. Box(1981-84)
26=J10 Truck 8 Ft. Box(1981-86)
27=J-20 Truck 8 Ft. Box(1981-86)
15=Wagoneer 4 Dr.(1981-83)
75=Wagoneer 4WD-4 Dr.(1984-86)

BODY
CJ=CJ-5, CJ-6, CJ-7, CJ-8, Scrambler(1981-86)
MJ=Comanche Pickup(1986)

STYLES
SJ=Wagoneer(1981-83), Grand Wagoneer(1984-86), Cherokee(1981-83), J-10, J-20(1981-86)
XJ=Wagoneer(1984-86), Cherokee(1984-86)

AR = Use as Required - = Non Illustrated Part P.A.R. = Paint as Required

« RETURN TO GROUP INDEX

WINCH MOTOR AND DRUM HIDDEN WINCH XJ CHEROKEE, XJ WAGONEER, COMANCHE
Figure 13-3500

81J13 3500

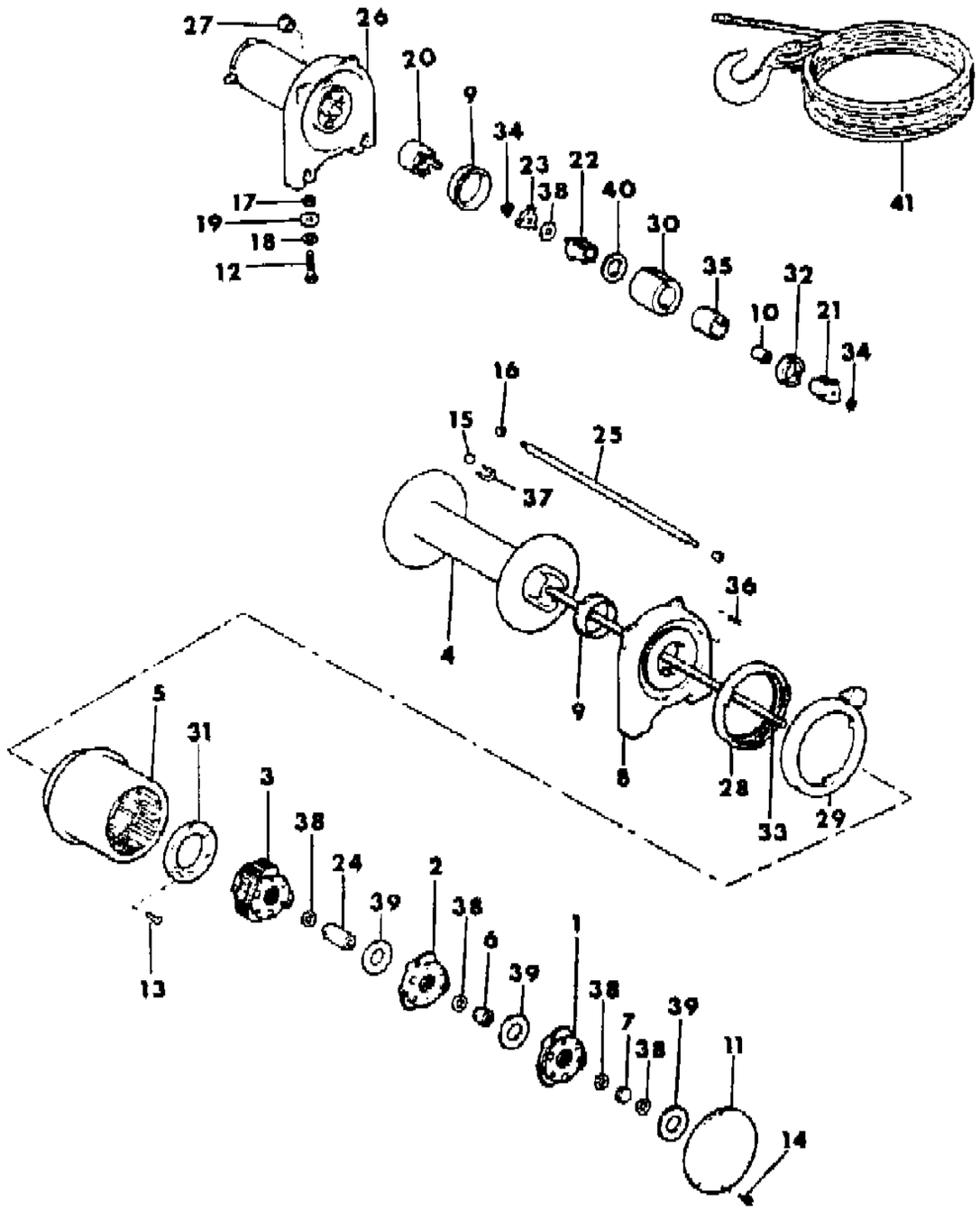

ITEM	PART NUMBER	QTY	BODY	MODEL	DESCRIPTION
1	8350 2228	1			GEAR ASSEMBLY, Input ***
2	8350 2229	1			GEAR ASSEMBLY, Intermediate ***
3	8350 2230	1			GEAR ASSEMBLY, Output ***
4	8350 2232	1			DRUM, Cable ***
5	8351 0105	1			GEAR, Ring ***
6	8351 0116	1			GEAR, Intermediate ***
7	8350 2233	1			GEAR, Input ***
8	8351 0100	1			BEARING, End
9	8351 0104	2			BUSHING, Brake Drum
10	8350 2234	1			BUSHING, Brake Drum
11	8351 0128	1			COVER, Gear Housing
12	S018 0124	4			SCREW
13	8351 0136	6			SCREW
14	8351 0129	6			SCREW
15	8351 0180	2			NUT
16	8351 0135	2			NUT
17	J012 0377	4			NUT
18	J012 0382	4			WASHER
19	8350 2235	4			WASHER
20	8350 2236	1			COUPLIING, Brake ***
21	8350 2237	1			DRUM, Output Brake ***
22	8350 2238	1			DRUM, Input Brake ***
23	8350 2239	1			SPROCKET, Input ***
24	8350 2240	1			GEAR, Output ***
25	8351 0134	1			BAR, Tie
26	8351 0038	1			MOTOR
27	8351 0103	1			PLUG
28	8351 0107	1			RING, Locking
29	8351 0106	1			RING, Cam
30	8350 2241	2			RING, Half
31	8351 0110	1			RETAINER, Ring Gear
32	8350 2242	1			RETAINER, Brake Spring
33	8350 2091	1			SHAFT, Input
34	8350 2243	2			RING, Snap
35	8350 2244	2			SPRING, Brake
36	8350 2245	2			SPRING
37	8351 0102	1			U-BOLT ***
38	8351 0127	5			WASHER, Thrust
39	8351 0126	3			WASHER, Thrust

MODEL CODES
16=Cherokee 2 Dr.(1981-83)
17=Cherokee 2 Dr.(1981-83)
73=Cherokee 2WD-2 Dr.(1984-86)
74=Cherokee 2WD-4 Dr.(1984-86)
18=Cherokee 4 Dr.(1981-83)
77=Cherokee 4WD-2 Dr.(1984-86)
78=Cherokee 4WD-4 Dr.(1984-86)
85=CJ-5 (1981-83)
86=CJ-6(1981)
87=CJ-7(1981-86)
88=CJ-8, Scrambler(1981-86)
64=Comanche 2WD-6 Ft. Box(1986)
66=Comanche 2WD-7 Ft. Box(1986)
63=Comanche 4WD-6 Ft. Box(1986)
65=Comanche 4WD-7 Ft. Box(1986)
15=Grand Wagoneer 4 Dr.(1984-86)
25=J-10 Truck 7 Ft. Box(1981-84)
26=J10 Truck 8 Ft. Box(1981-86)
27=J-20 Truck 8 Ft. Box(1981-86)
15=Wagoneer 4 Dr.(1981-83)
75=Wagoneer 4WD-4 Dr.(1984-86)

BODY
CJ=CJ-5, CJ-6, CJ-7, CJ-8, Scrambler(1981-86)
MJ=Comanche Pickup(1986)

STYLES
SJ=Wagoneer(1981-83), Grand Wagoneer(1984-86), Cherokee(1981-83), J-10, J-20(1981-86)
XJ=Wagoneer(1984-86), Cherokee(1984-86)

AR = Use as Required - = Non Illustrated Part P.A.R. = Paint as Required

WINCH MOTOR AND DRUM HIDDEN WINCH XJ CHEROKEE, XJ WAGONEER, COMANCHE
Figure 13-3500

81J13 3500

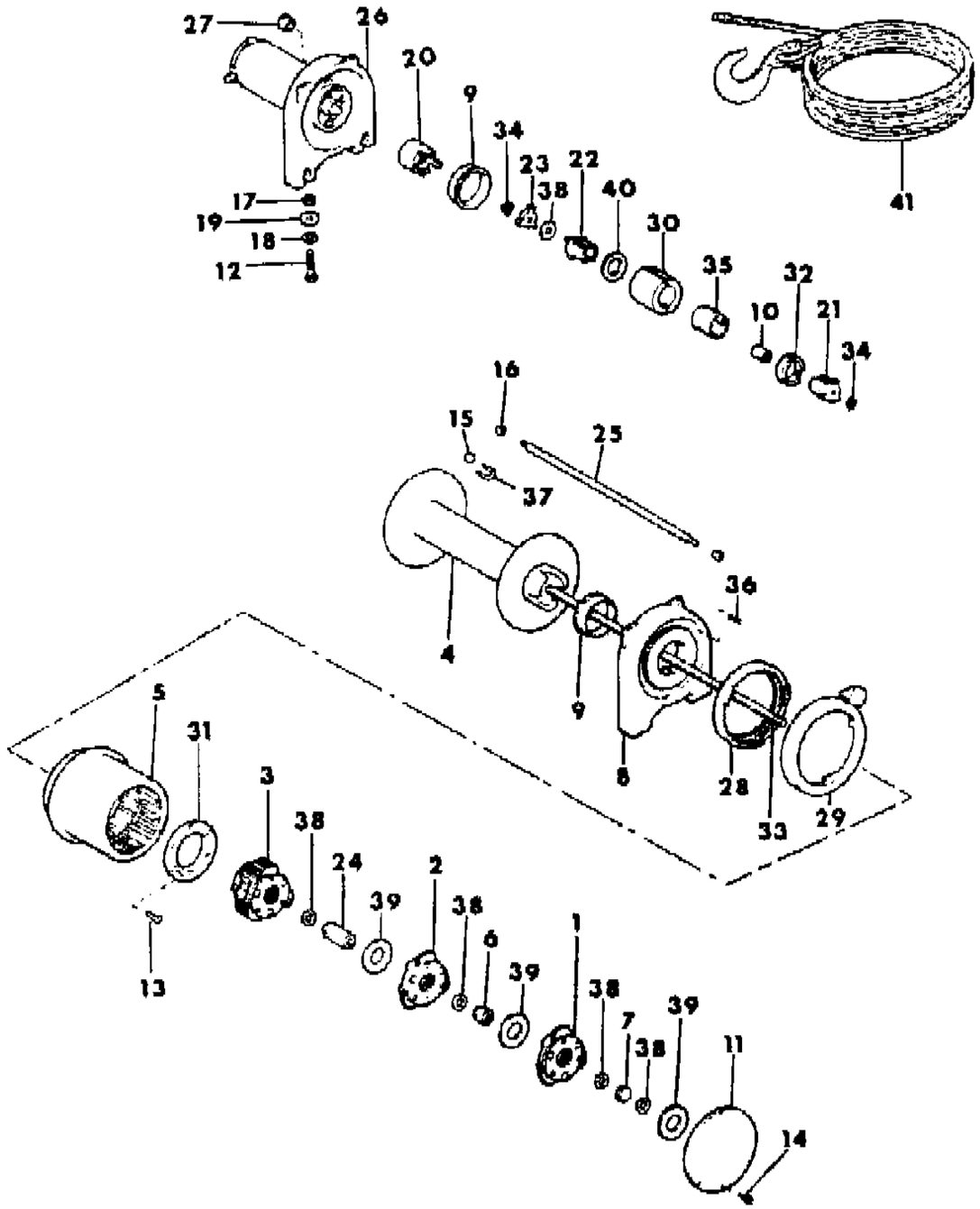

ITEM	PART NUMBER	QTY	BODY	MODEL	DESCRIPTION
40	8350 2246	1			WASHER, Thrust
41	J813 1517	1			CABLE, Tow

MODEL CODES
16=Cherokee 2 Dr.(1981-83)
17=Cherokee 2 Dr.(1981-83)
73=Cherokee 2WD-2 Dr.(1984-86)
74=Cherokee 2WD-4 Dr.(1984-86)
18=Cherokee 4 Dr.(1981-83)
77=Cherokee 4WD-2 Dr.(1984-86)
78=Cherokee 4WD-4 Dr.(1984-86)
85=CJ-5 (1981-83)
86=CJ-6(1981)
87=CJ-7(1981-86)
88=CJ-8, Scrambler(1981-86)
64=Comanche 2WD-6 Ft. Box(1986)
66=Comanche 2WD-7 Ft. Box(1986)
63=Comanche 4WD-6 Ft. Box(1986)
65=Comanche 4WD-7 Ft. Box(1986)
15=Grand Wagoneer 4 Dr.(1984-86)
25=J-10 Truck 7 Ft. Box(1981-84)
26=J10 Truck 8 Ft. Box(1981-86)
27=J-20 Truck 8 Ft. Box(1981-86)
15=Wagoneer 4 Dr.(1981-83)
75=Wagoneer 4WD-4 Dr.(1984-86)

BODY
CJ=CJ-5, CJ-6, CJ-7, CJ-8, Scrambler(1981-86)
MJ=Comanche Pickup(1986)

STYLES
SJ=Wagoneer(1981-83), Grand Wagoneer(1984-86), Cherokee(1981-83), J-10, J-20(1981-86)
XJ=Wagoneer(1984-86), Cherokee(1984-86)

AR = Use as Required - = Non Illustrated Part P.A.R. = Paint as Required

« RETURN TO GROUP INDEX

HARNESS, TRAILER TOWING CJ, EXPORT
Figure 13-3600

81J13 3600

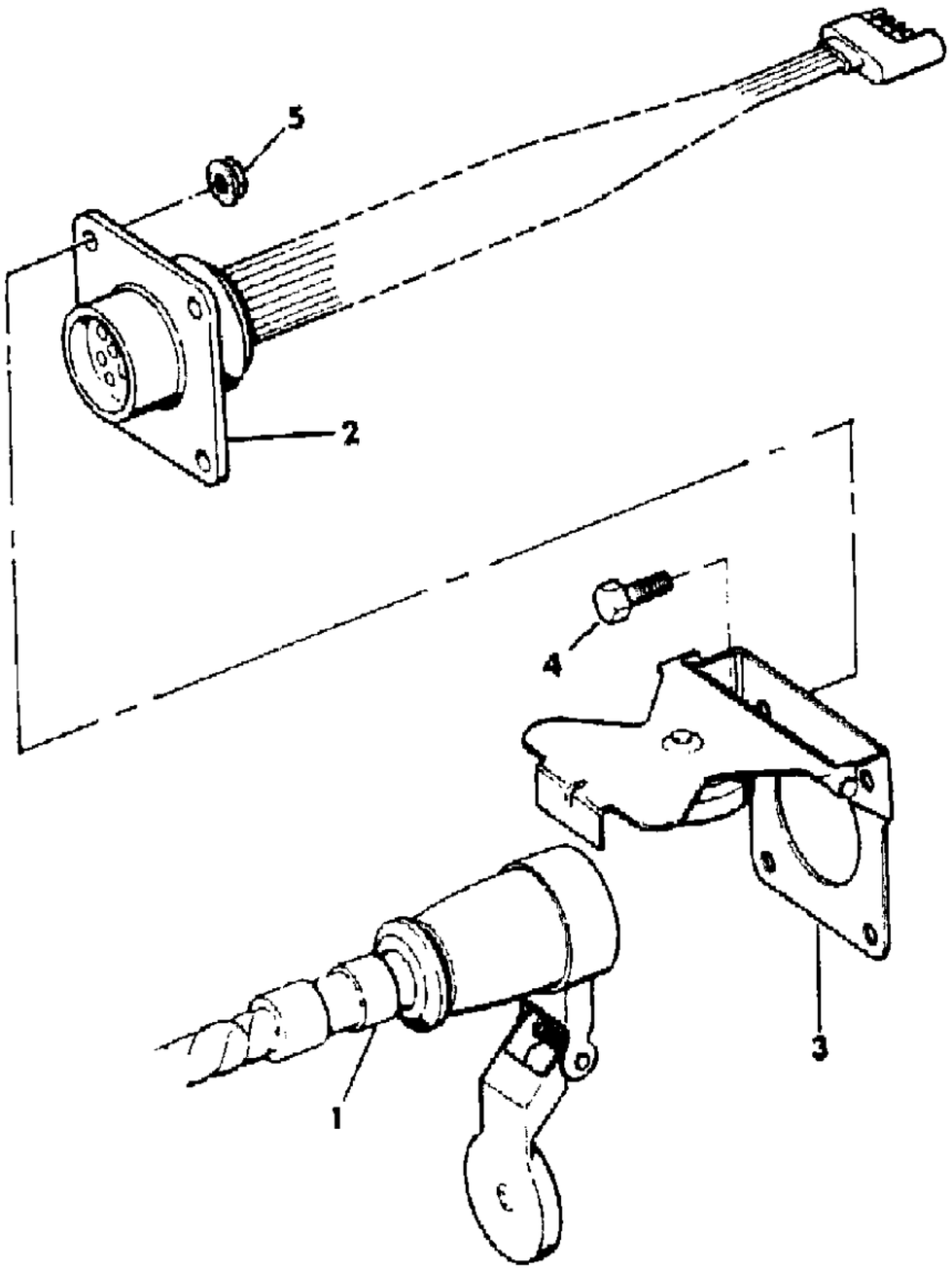

ITEM	PART NUMBER	QTY	BODY	MODEL	DESCRIPTION
1					HARNESS, Trailer Towing
	J805 3178	1			With Black Out Lamps
	J805 0371	1			Without Black Out Lamps
2					HARNESS, Trailer Towing
	J805 0600	1			With Black Out Lamps
	J805 1068	1			Without Black Out Lamps
3	J773 1428	1			COVER, Trailer Towing
4	J018 0020	4			BOLT
5	J941 6918	4			NUT

MODEL CODES

16=Cherokee 2 Dr.(1981-83)
17=Cherokee 2 Dr.(1981-83)
73=Cherokee 2WD-2 Dr.(1984-86)
74=Cherokee 2WD-4 Dr.(1984-86)
18=Cherokee 4 Dr.(1981-83)
77=Cherokee 4WD-2 Dr.(1984-86)
78=Cherokee 4WD-4 Dr.(1984-86)
85=CJ-5 (1981-83)
86=CJ-6(1981)
87=CJ-7(1981-86)
88=CJ-8, Scrambler(1981-86)
64=Comanche 2WD-6 Ft. Box(1986)
66=Comanche 2WD-7 Ft. Box(1986)
63=Comanche 4WD-6 Ft. Box(1986)
65=Comanche 4WD-7 Ft. Box(1986)
15=Grand Wagoneer 4 Dr.(1984-86)
25=J-10 Truck 7 Ft. Box(1981-84)
26=J10 Truck 8 Ft. Box(1981-86)
27=J-20 Truck 8 Ft. Box(1981-86)
15=Wagoneer 4 Dr.(1981-83)
75=Wagoneer 4WD-4 Dr.(1984-86)

BODY
CJ=CJ-5, CJ-6, CJ-7, CJ-8, Scrambler(1981-86)
MJ=Comanche Pickup(1986)

STYLES
SJ=Wagoneer(1981-83), Grand Wagoneer(1984-86), Cherokee(1981-83), J-10, J-20(1981-86)
XJ=Wagoneer(1984-86), Cherokee(1984-86)

AR = Use as Required - = Non Illustrated Part P.A.R. = Paint as Required

« RETURN TO GROUP INDEX

HITCH, TRAILER LIGHT DUTY XJ CHEROKEE, XJ WAGONEER
Figure 13-3700

81J13 3700

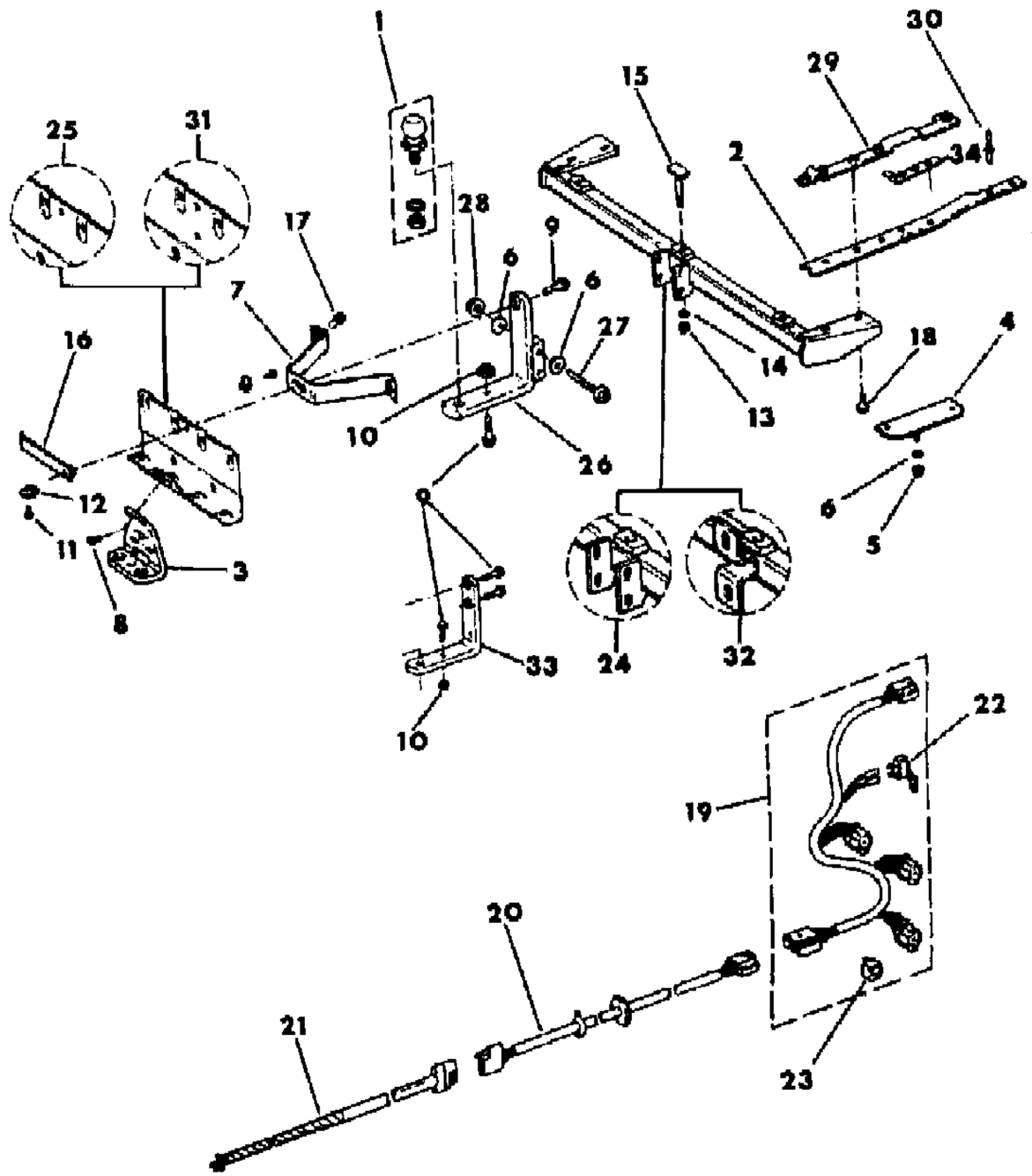

ITEM	PART NUMBER	QTY	BODY	MODEL	DESCRIPTION
1	J899 3216	1			BALL PACKAGE, Trailer Towing ***
2	5200 1661	1			REINFORCEMENT
3	5200 0920	1			BRACKET
4	5200 1511	1			BRACKET
5	J420 0046	2			NUT
6	1150 0324	AR			WASHER
7	5200 1168	1			BRACKET
8	3420 1999	2			BOLT
9	3420 1386	4			BOLT
10	1150 2813	2			NUT
11	3420 1596	8			BOLT
12	1150 0660	8			NUT
13	3420 1765	3			NUT
14	S012 0384	3			WASHER
15	3420 1674	3			BOLT
16	5200 0482	1			NUT, Tab
17	1150 2685	2			BOLT
18					BOLT
	1150 2606	AR			M10xl.5
	3420 1389	AR			M12x1.75
19					HARNESS, Trailer Towing
	5600 1407	1		75	For vehicles less Trailer Towing Package, also order Body Harness 56001686
	5600 1236	1		73,74,7	For Vehicles less Trailer Towing Package, also order Body Harness 56001686
20	5600 1237	1			HARNESS, Trailer Towing
21	J323 7362	1			HARNESS, Trailer Towing
22	J545 5362	AR			BREAKER, Circuit ***
23	J575 8912	AR			RELAY, Trailer Towing
24	8350 1168	1			TUBE
25	8350 1169	1			PLATE
26	5200 1523	1			BAR
27	3420 2034	2			SCREW
28	1150 2812	2			NUT
29	5200 1174-5	1			REINFORCEMENT
30	J400 5791	4			RIVET
31	5200 0481	1			PLATE
32	5200 0922	1			TUBE
33	5200 0666	1			BAR

MODEL CODES

16=Cherokee 2 Dr.(1981-83)
17=Cherokee 2 Dr.(1981-83)
73=Cherokee 2WD-2 Dr.(1984-86)
74=Cherokee 2WD-4 Dr.(1984-86)
18=Cherokee 4 Dr.(1981-83)
77=Cherokee 4WD-2 Dr.(1984-86)
78=Cherokee 4WD-4 Dr.(1984-86)
85=CJ-5 (1981-83)
86=CJ-6(1981)
87=CJ-7(1981-86)
88=CJ-8, Scrambler(1981-86)
64=Comanche 2WD-6 Ft. Box(1986)
66=Comanche 2WD-7 Ft. Box(1986)
63=Comanche 4WD-6 Ft. Box(1986)
65=Comanche 4WD-7 Ft. Box(1986)
15=Grand Wagoneer 4 Dr.(1984-86)
25=J-10 Truck 7 Ft. Box(1981-84)
26=J10 Truck 8 Ft. Box(1981-86)
27=J-20 Truck 8 Ft. Box(1981-86)
15=Wagoneer 4 Dr.(1981-83)
75=Wagoneer 4WD-4 Dr.(1984-86)

BODY
CJ=CJ-5, CJ-6, CJ-7, CJ-8, Scrambler(1981-86)
MJ=Comanche Pickup(1986)

STYLES
SJ=Wagoneer(1981-83), Grand Wagoneer(1984-86), Cherokee(1981-83), J-10, J-20(1981-86)
XJ=Wagoneer(1984-86), Cherokee(1984-86)

AR = Use as Required - = Non Illustrated Part P.A.R. = Paint as Required

« RETURN TO GROUP INDEX »

81J13 3700

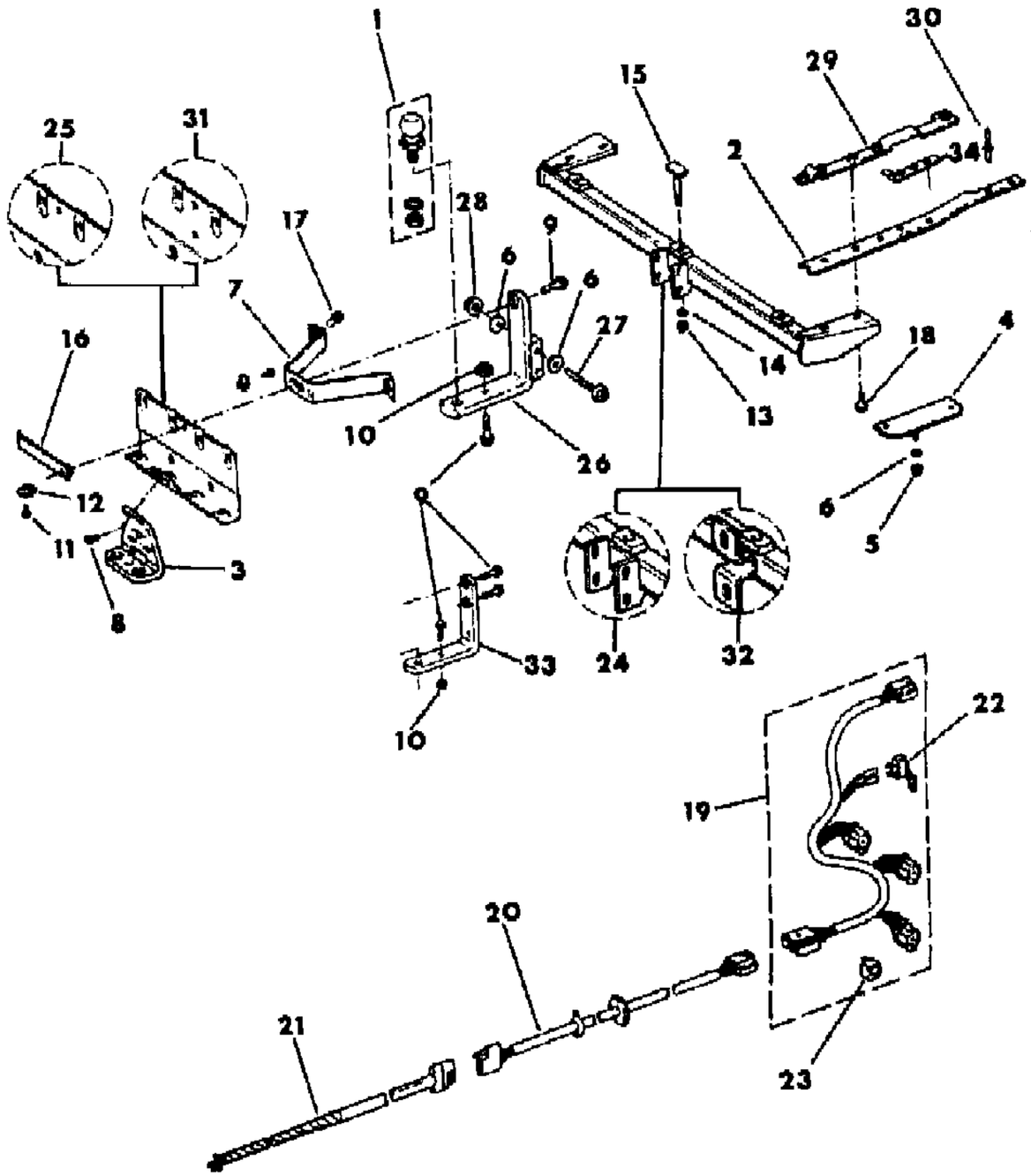

ITEM	PART NUMBER	QTY	BODY	MODEL	DESCRIPTION
34	5200 1170	2			REINFORCEMENT

MODEL CODES
16=Cherokee 2 Dr.(1981-83)
17=Cherokee 2 Dr.(1981-83)
73=Cherokee 2WD-2 Dr.(1984-86)
74=Cherokee 2WD-4 Dr.(1984-86)
18=Cherokee 4 Dr.(1981-83)
77=Cherokee 4WD-2 Dr.(1984-86)
78=Cherokee 4WD-4 Dr.(1984-86)
85=CJ-5 (1981-83)
86=CJ-6(1981)
87=CJ-7(1981-86)
88=CJ-8, Scrambler(1981-86)
64=Comanche 2WD-6 Ft. Box(1986)
66=Comanche 2WD-7 Ft. Box(1986)
63=Comanche 4WD-6 Ft. Box(1986)
65=Comanche 4WD-7 Ft. Box(1986)
15=Grand Wagoneer 4 Dr.(1984-86)
25=J-10 Truck 7 Ft. Box(1981-84)
26=J10 Truck 8 Ft. Box(1981-86)
27=J-20 Truck 8 Ft. Box(1981-86)
15=Wagoneer 4 Dr.(1981-83)
75=Wagoneer 4WD-4 Dr.(1984-86)

BODY
CJ=CJ-5, CJ-6, CJ-7, CJ-8, Scrambler(1981-86)
MJ=Comanche Pickup(1986)

STYLES
SJ=Wagoneer(1981-83), Grand Wagoneer(1984-86), Cherokee(1981-83), J-10, J-20(1981-86)
XJ=Wagoneer(1984-86), Cherokee(1984-86)

AR = Use as Required - = Non Illustrated Part P.A.R. = Paint as Required

HITCH, TRAILER HEAVY DUTY XJ CHEROKEE, XJ WAGONEER
Figure 13-3800

81J13 3800

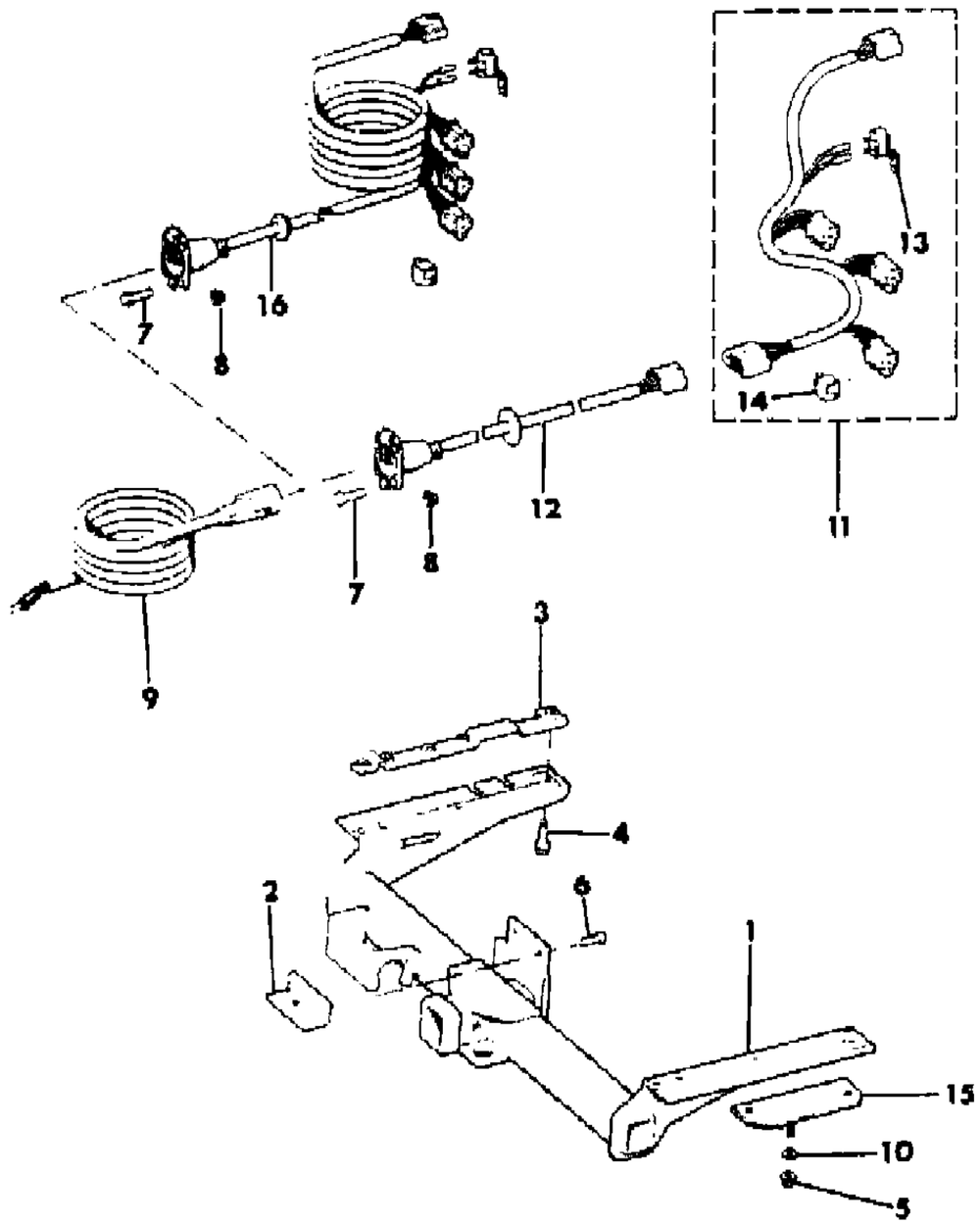

ITEM	PART NUMBER	QTY	BODY	MODEL	DESCRIPTION
1	5200 1388	1			HITCH, Trailer Towing ***
2	5200 1389	1			PLATE
3	5200 1174-5	1			REINFORCEMENT
4	3420 1386	8			BOLT
5	J420 0046	2			NUT
6	3420 1990	3			BOLT
7	3420 1195	4			SCREW
8	J420 0325	4			NUT
9	J545 5349	1			HARNESS, Trailer Towing
10	1150 0324	2			WASHER
11					HARNESS, Trailer Towing
	5600 1407	1		75	For vehicles less Trailer Towing Package, also order Body Harness 56001686
	5600 1236	1		73,74,7	For vehicles less Trailer Towing Package, also order Body Harness 56001686
12	5600 1239	1			HARNESS, Trailer Towing
13	J545 5362	2			BREAKER, Circuit ***
14	J575 8912	3			RELAY, Trailer Towing
15	5200 1511	1			BRACKET
16	5600 0609	1			HARNESS, Trailer Towing

MODEL CODES

16=Cherokee 2 Dr.(1981-83)
17=Cherokee 2 Dr.(1981-83)
73=Cherokee 2WD-2 Dr.(1984-86)
74=Cherokee 2WD-4 Dr.(1984-86)
18=Cherokee 4 Dr.(1981-83)
77=Cherokee 4WD-2 Dr.(1984-86)
78=Cherokee 4WD-4 Dr.(1984-86)
85=CJ-5 (1981-83)
86=CJ-6(1981)
87=CJ-7(1981-86)
88=CJ-8, Scrambler(1981-86)
64=Comanche 2WD-6 Ft. Box(1986)
66=Comanche 2WD-7 Ft. Box(1986)
63=Comanche 4WD-6 Ft. Box(1986)
65=Comanche 4WD-7 Ft. Box(1986)
15=Grand Wagoneer 4 Dr.(1984-86)
25=J-10 Truck 7 Ft. Box(1981-84)
26=J10 Truck 8 Ft. Box(1981-86)
27=J-20 Truck 8 Ft. Box(1981-86)
15=Wagoneer 4 Dr.(1981-83)
75=Wagoneer 4WD-4 Dr.(1984-86)

BODY
CJ=CJ-5, CJ-6, CJ-7, CJ-8, Scrambler(1981-86)
MJ=Comanche Pickup(1986)

STYLES
SJ=Wagoneer(1981-83), Grand Wagoneer(1984-86), Cherokee(1981-83), J-10, J-20(1981-86)
XJ=Wagoneer(1984-86), Cherokee(1984-86)

AR = Use as Required - = Non Illustrated Part P.A.R. = Paint as Required

« RETURN TO GROUP INDEX

SNOW PLOW OPERATING CONTROLS AND SWITCHES, 1984-85 XJ CHEROKEE, XJ WAGONEER
Figure 13-3900

81J13 3900

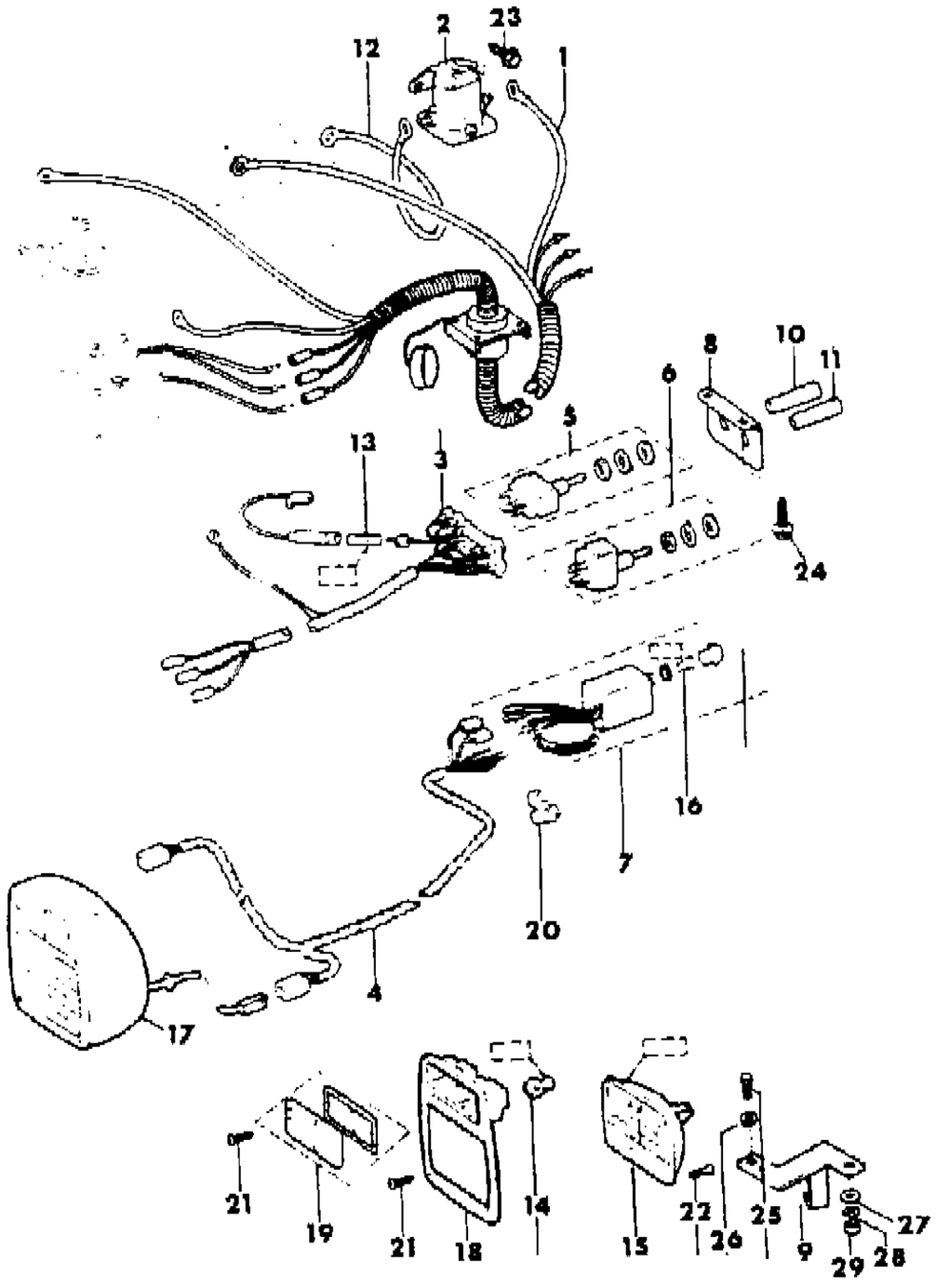

ITEM	PART NUMBER	QTY	BODY	MODEL	DESCRIPTION
1	J200 8470	1			HARNESS, Snow Plow Electrical
2	J999 4668	1			SOLENOID, Snow Plow ***
3	J201 5478	1			HARNESS, Snow Plow Electrical
4	J200 7316	1			HARNESS, Auxiliary Headlamp
5	J202 1918	1			SWITCH, Snow Plow Angle
6	J202 1919	1			SWITCH, Snow Plow Raise/Lower
7	J200 7860	1			SWITCH, Auxiliary Headlamp
8	J201 5374	1			BRACKET, Snow Plow Switch
9					BRACKET, Auxiliary Headlamp
	J201 0715	1			Left
	J201 0716	1			Right
10	J201 5376	1			HANDLE, Angle Switch, Black
11	J201 5375	1			HANDLE, Raise/Lower Switch, Yellow
12	J200 5024	1			CABLE, Snow Plow Solenoid
13	S010 6653	1			FUSE, #20 Ampere ***
14	J320 9544	1			BULB, #1157
15	J812 8683	1			BULB, Sealed Beam, #6052
16	J013 1282	1			BULB, #53
17	J200 7921	2			HEADLAMP ASSEMBLY, Auxiliary ***
18	J200 8484	2			BEZEL, Auxiliary Headlamp
19	J200 7861	2			LENS PACKAGE, Auxiliary Parking Lamp ***
20	J318 6888	7			CONNECTOR, Splice
21	S942 4317	5			SCREW
22	J016 3162	4			SCREW
23	J400 5737	2			SCREW
24	J448 9486	2			SCREW
25	S018 0124	6			BOLT
26	J012 0382	6			WASHER, Lock
27	J012 0396	4			WASHER, Plain
28	S012 0384	4			WASHER, Lock
29	S012 0371	4			NUT, Lock

MODEL CODES

16=Cherokee 2 Dr.(1981-83)
17=Cherokee 2 Dr.(1981-83)
73=Cherokee 2WD-2 Dr.(1984-86)
74=Cherokee 2WD-4 Dr.(1984-86)
18=Cherokee 4 Dr.(1981-83)
77=Cherokee 4WD-2 Dr.(1984-86)
78=Cherokee 4WD-4 Dr.(1984-86)
85=CJ-5 (1981-83)
86=CJ-6(1981)
87=CJ-7(1981-86)
88=CJ-8, Scrambler(1981-86)
64=Comanche 2WD-6 Ft. Box(1986)
66=Comanche 2WD-7 Ft. Box(1986)
63=Comanche 4WD-6 Ft. Box(1986)
65=Comanche 4WD-7 Ft. Box(1986)
15=Grand Wagoneer 4 Dr.(1984-86)
25=J-10 Truck 7 Ft. Box(1981-84)
26=J10 Truck 8 Ft. Box(1981-86)
27=J-20 Truck 8 Ft. Box(1981-86)
15=Wagoneer 4 Dr.(1981-83)
75=Wagoneer 4WD-4 Dr.(1984-86)

BODY
CJ=CJ-5, CJ-6, CJ-7, CJ-8, Scrambler(1981-86)
MJ=Comanche Pickup(1986)

STYLES
SJ=Wagoneer(1981-83), Grand Wagoneer(1984-86), Cherokee(1981-83), J-10, J-20(1981-86)
XJ=Wagoneer(1984-86), Cherokee(1984-86)

AR = Use as Required - = Non Illustrated Part P.A.R. = Paint as Required

« RETURN TO GROUP INDEX

SNOW PLOW OPERATING CONTROLS AND SWITCHES, 1986 XJ CHEROKEE, XJ WAGONEER, COMANCHE
Figure 13-4000

81J13 4000

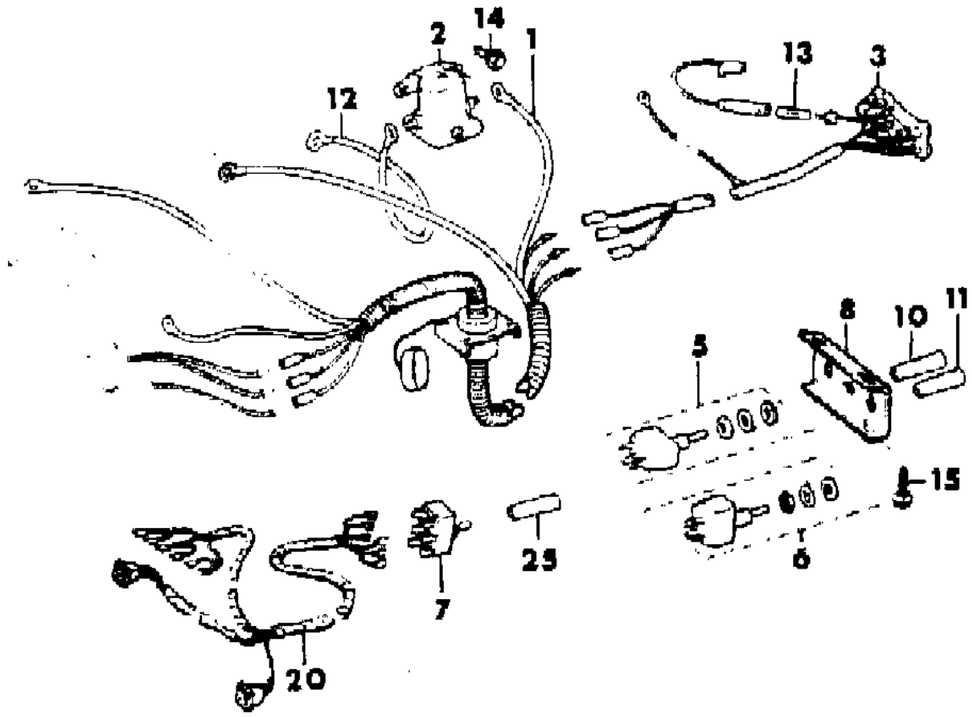

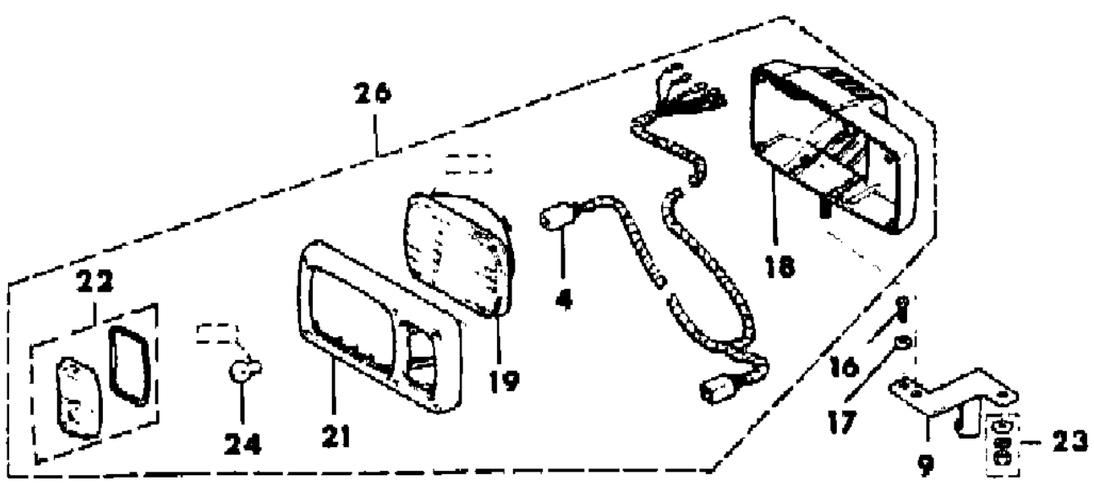

ITEM	PART NUMBER	QTY	BODY	MODEL	DESCRIPTION
1	J200 8470	1			HARNESS, Snow Plow Electrical
2	J999 4668	1			SOLENOID, Snow Plow ***
3	J201 5478	1			HARNESS, Snow Plow Electrical
4	8350 2796	1			HARNESS, Auxiliary Headlamp
5	J202 1918	1			SWITCH, Snow Polw Angle
6	J202 1919	1			SWITCH, Snow Plow Raise/Lower
7	8350 2792	1			SWITCH, Auxiliary Headlamp
8	J201 5656	1			BRACKET, Snow Plow Switch
9					BRACKET, Auxilary Headlamp
	J201 0715	1			Left
	J201 0716	1			Right
10	J201 5376	1			HANDLE, Angle Switch, Black
11	J201 5375	1			HANDLE, Raise/Lower Switch, Yellow
12	J200 5024	2			CABLE, Snow Plow Solenoid
13	S010 6653	1			FUSE, #20 Ampere ***
14	J400 5737	2			SCREW
15	J448 9486	2			SCREW
16	S018 0124	6			BOLT
17	J012 0382	6			WASHER, Lock
18					HOUSING, Auxiliary Headlamp
	8350 2794	1			Left
	8350 2793	1			Right
19	J813 4319	2			BULB, Seal Beam, #6054
20	8350 2795	1			HARNESS, Auxiliary Headlamp
21	8350 2790	2			BEZEL, Auxiliary Headlamp
22	8350 2791	2			LENS PACKAGE, Auxiliary Headlamp ***
23	8350 2797	1			MOUNTING PACKAGE, Auxiliary Headlamp ***
24	J320 9544	4			BULB, #1157
25	8350 3178	1			HANDLE, Snow Plow Light Switch, Blue
26	8350 4184-5	1			HEADLAMP ASSEMBLY ***

MODEL CODES

16=Cherokee 2 Dr.(1981-83)
17=Cherokee 2 Dr.(1981-83)
73=Cherokee 2WD-2 Dr.(1984-86)
74=Cherokee 2WD-4 Dr.(1984-86)
18=Cherokee 4 Dr.(1981-83)
77=Cherokee 4WD-2 Dr.(1984-86)
78=Cherokee 4WD-4 Dr.(1984-86)
85=CJ-5 (1981-83)
86=CJ-6(1981)
87=CJ-7(1981-86)
88=CJ-8, Scrambler(1981-86)
64=Comanche 2WD-6 Ft. Box(1986)
66=Comanche 2WD-7 Ft. Box(1986)
63=Comanche 4WD-6 Ft. Box(1986)
65=Comanche 4WD-7 Ft. Box(1986)
15=Grand Wagoneer 4 Dr.(1984-86)
25=J-10 Truck 7 Ft. Box(1981-84)
26=J10 Truck 8 Ft. Box(1981-86)
27=J-20 Truck 8 Ft. Box(1981-86)
15=Wagoneer 4 Dr.(1981-83)
75=Wagoneer 4WD-4 Dr.(1984-86)

BODY
CJ=CJ-5, CJ-6, CJ-7, CJ-8, Scrambler(1981-86)
MJ=Comanche Pickup(1986)

STYLES
SJ=Wagoneer(1981-83), Grand Wagoneer(1984-86), Cherokee(1981-83), J-10, J-20(1981-86)
XJ=Wagoneer(1984-86), Cherokee(1984-86)

AR = Use as Required - = Non Illustrated Part P.A.R. = Paint as Required

« RETURN TO GROUP INDEX

SNOW PLOW OPERATING CONTROLS AND SWITCHES, 1986 XJ CHEROKEE, XJ WAGONEER, COMANCHE
Figure 13-4000

81J13 4100

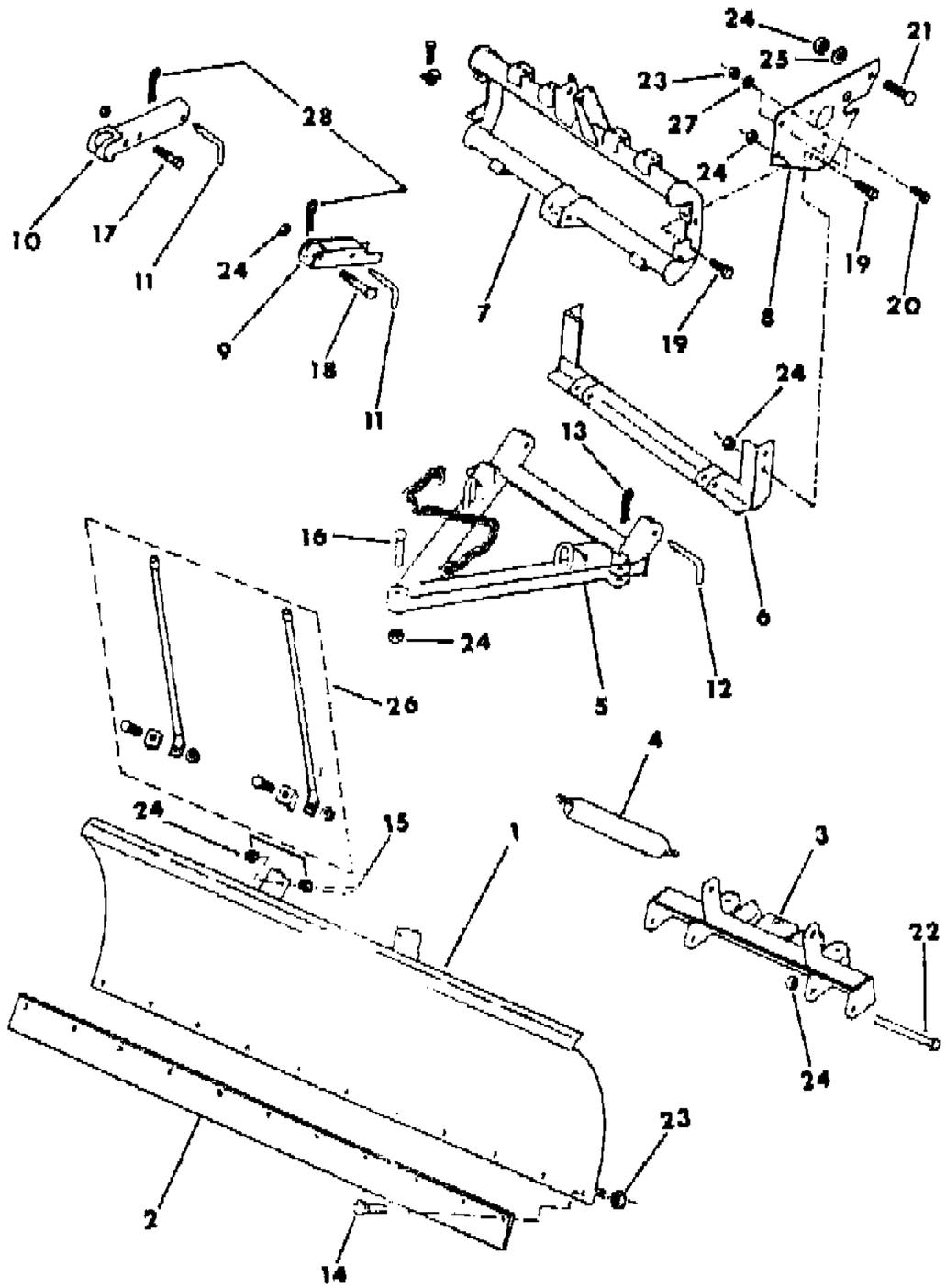

ITEM	PART NUMBER	QTY	BODY	MODEL	DESCRIPTION
1	J260 9102	1			MOLDBOARD ASSEMBLY ***
2	J200 9100	1			BLADE, Moldboard
3	J201 0891	1			BAR, Snow Plow Pivot
4	J201 2978	2			SPRING, Snow Plow Trip
5	J201 0888	1			A-FRAME, Snow Plow
6	J201 0897	1			FRAME, Snow Plow Clevis
7	J201 0883	1			FRAME, Snow Plow Lift
8	J201 0901	2			PLATE, Side
9	J201 0529	1			ARM, Snow Plow Support
10	J201 0514	1			ARM, Snow Plow Lift
11	J201 0538	2			PIN, Quick Disconnect
12	J201 3270	2			PIN, Hinge
13	J999 4945	2			CLIP, Spring
14	J202 1943	11			BOLT
15	J201 2150	2			BOLT
16	J201 3591	1			BOLT
17	J202 0144	1			BOLT
18	S027 1730	1			BOLT
19	J202 0139	8			BOLT
20	S018 0175	4			BOLT
21	J202 0254	2			BOLT
22	J201 3598	2			BOLT
23	J202 0307	15			NUT, Lock
24	J202 0318	16			NUT, Lock
25	J013 1016	2			WASHER
26	J200 9916	1			INDICATOR PACKAGE, Snow PLow Marker ***
27	J012 0396	4			WASHER, PLain
28	J202 1984	2			PIN, Cotter

MODEL CODES

16=Cherokee 2 Dr.(1981-83)
17=Cherokee 2 Dr.(1981-83)
73=Cherokee 2WD-2 Dr.(1984-86)
74=Cherokee 2WD-4 Dr.(1984-86)
18=Cherokee 4 Dr.(1981-83)
77=Cherokee 4WD-2 Dr.(1984-86)
78=Cherokee 4WD-4 Dr.(1984-86)
85=CJ-5 (1981-83)
86=CJ-6(1981)
87=CJ-7(1981-86)
88=CJ-8, Scrambler(1981-86)
64=Comanche 2WD-6 Ft. Box(1986)
66=Comanche 2WD-7 Ft. Box(1986)
63=Comanche 4WD-6 Ft. Box(1986)
65=Comanche 4WD-7 Ft. Box(1986)
15=Grand Wagoneer 4 Dr.(1984-86)
25=J-10 Truck 7 Ft. Box(1981-84)
26=J10 Truck 8 Ft. Box(1981-86)
27=J-20 Truck 8 Ft. Box(1981-86)
15=Wagoneer 4 Dr.(1981-83)
75=Wagoneer 4WD-4 Dr.(1984-86)

BODY
CJ=CJ-5, CJ-6, CJ-7, CJ-8, Scrambler(1981-86)
MJ=Comanche Pickup(1986)

STYLES
SJ=Wagoneer(1981-83), Grand Wagoneer(1984-86), Cherokee(1981-83), J-10, J-20(1981-86)
XJ=Wagoneer(1984-86), Cherokee(1984-86)

AR = Use as Required - = Non Illustrated Part P.A.R. = Paint as Required

« RETURN TO GROUP INDEX

FRAME ASSEMBLY SJ CHEROKEE, SJ WAGONEER J10, J20
Figure 13-4200

81J13 4200

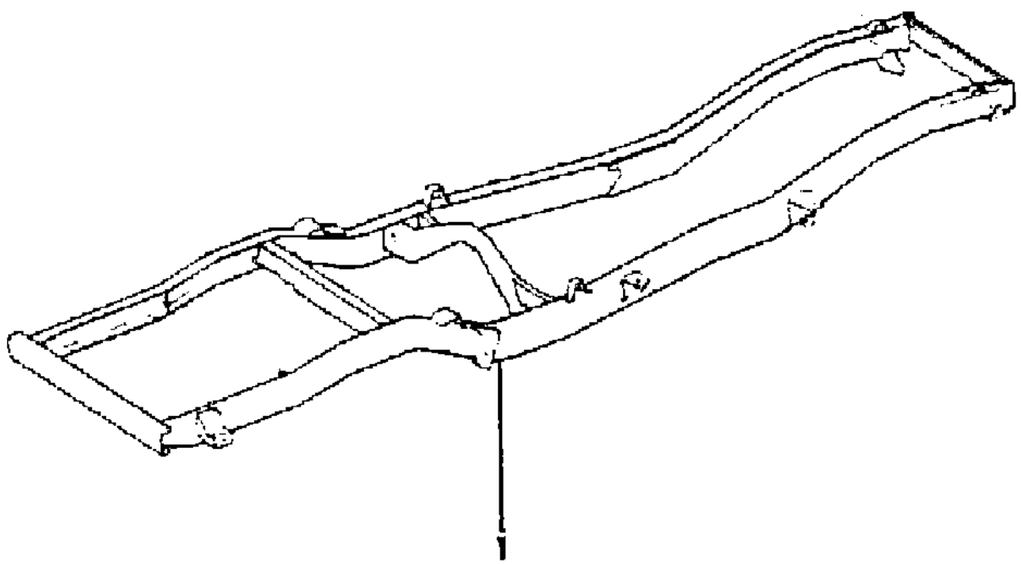

ITEM	PART NUMBER	QTY	BODY	MODEL	DESCRIPTION
1					FRAME ASSEMBLY
					Wagon
	J536 2503	1			1981-84
	J536 5187	1			1985-86
					Truck
	J535 9828	1		25	
	J535 9829	1		26,27	

MODEL CODES

16=Cherokee 2 Dr.(1981-83)
17=Cherokee 2 Dr.(1981-83)
73=Cherokee 2WD-2 Dr.(1984-86)
74=Cherokee 2WD-4 Dr.(1984-86)
18=Cherokee 4 Dr.(1981-83)
77=Cherokee 4WD-2 Dr.(1984-86)
78=Cherokee 4WD-4 Dr.(1984-86)
85=CJ-5 (1981-83)
86=CJ-6(1981)
87=CJ-7(1981-86)
88=CJ-8, Scrambler(1981-86)
64=Comanche 2WD-6 Ft. Box(1986)
66=Comanche 2WD-7 Ft. Box(1986)
63=Comanche 4WD-6 Ft. Box(1986)
65=Comanche 4WD-7 Ft. Box(1986)
15=Grand Wagoneer 4 Dr.(1984-86)
25=J-10 Truck 7 Ft. Box(1981-84)
26=J10 Truck 8 Ft. Box(1981-86)
27=J-20 Truck 8 Ft. Box(1981-86)
15=Wagoneer 4 Dr.(1981-83)
75=Wagoneer 4WD-4 Dr.(1984-86)

BODY
CJ=CJ-5, CJ-6, CJ-7, CJ-8, Scrambler(1981-86)
MJ=Comanche Pickup(1986)

STYLES
SJ=Wagoneer(1981-83), Grand Wagoneer(1984-86), Cherokee(1981-83), J-10, J-20(1981-86)
XJ=Wagoneer(1984-86), Cherokee(1984-86)

AR = Use as Required - = Non Illustrated Part P.A.R. = Paint as Required

« RETURN TO GROUP INDEX

FRAME AND COMPONENTS SJ CHEROKEE, SJ WAGONEER J10, J20
Figure 13-4300

81J13 4300

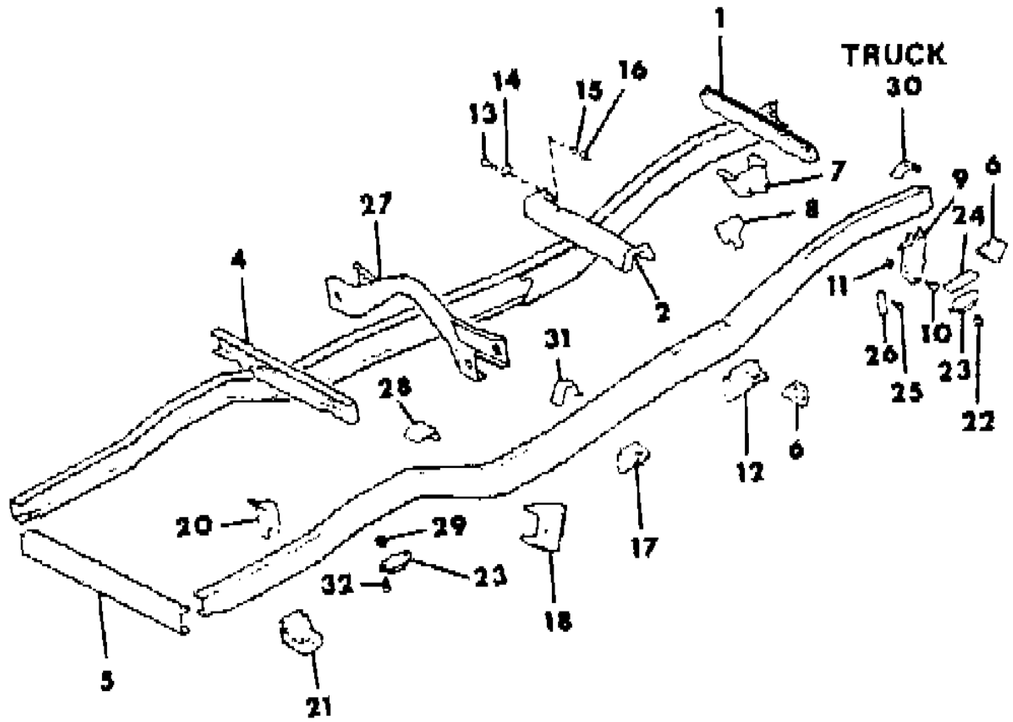

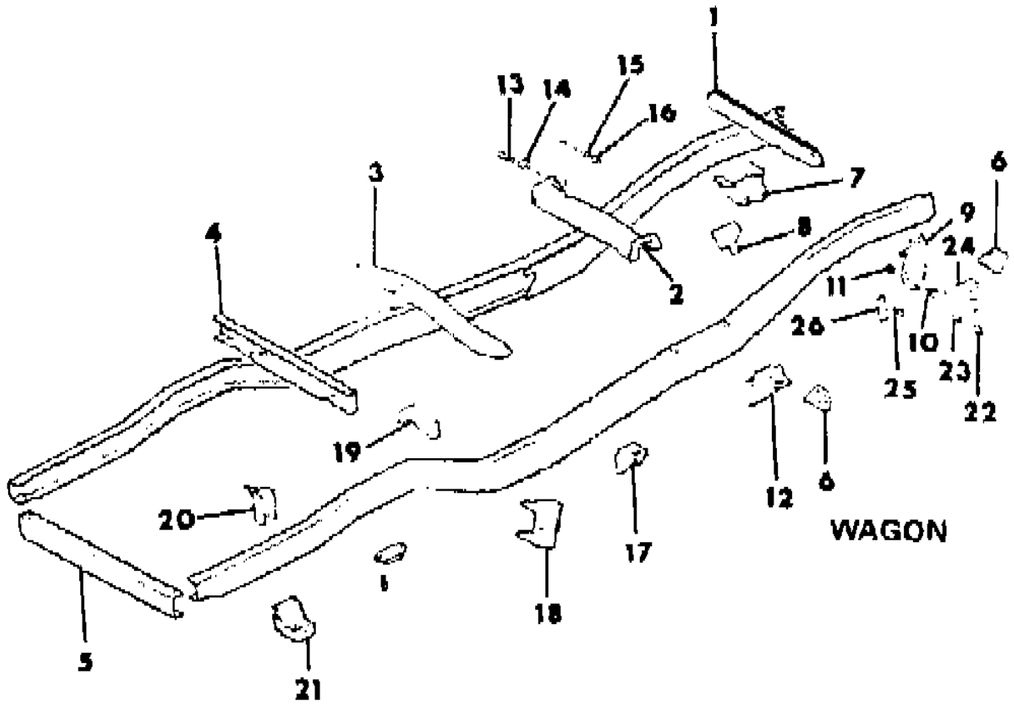

ITEM	PART NUMBER	QTY	BODY	MODEL	DESCRIPTION
1	J812 9559	1			CROSSMEMBER, Front
2	J813 1904	1			CROSSMEMBER, Engine Rear
3	J812 7718	1			CROSSMEMBER, Center, Wagon
4					CROSSMEMBER
	J813 3431	1			Wagon
	J812 6847	1			Truck
	J812 6846	1			Wagon, Right Hand Drive, EXPORT
5					CROSSMEMBER, Rear
	J812 9560	1			Wagon
	J812 6849	1			Truck
6	J812 9561	4			BRACKET, Spring Mounting
7	J812 7810	1			BRACKET
8	J812 7811	1			GUSSET
9					BRACKET, Shock Absorber
					Without Dual Shocks
	J535 8052	1			Right
	J535 8051	1			Left
					With Dual Shocks
	J536 2790	2			Right
	J536 2789	2			Left
10	J400 5665	2			SCREW, 1.12" long
	J942 1204	4			BOLT, 3.25" long
11	J400 3909	4			NUT
12					BRACKET
					Wagon
	J812 6836	1			Right
	J812 6835	1			Left
					Truck
	J812 6838	1			Right
	J812 6837	1			Left
13	J018 1652	8			BOLT
14	J813 1905	2			SPACER
15	J012 0382	8			NUT
16	J012 0369	8			BRACKET
17					BRACKET
	J812 6840	2			Wagon
	J812 6839	2			Truck
18					BRACKET
	J812 6850	2			Wagon

MODEL CODES

16=Cherokee 2 Dr.(1981-83)	78=Cherokee 4WD-4 Dr.(1984-86)	64=Comanche 2WD-6 Ft. Box(1986)	25=J-10 Truck 7 Ft. Box(1981-84)
17=Cherokee 2 Dr.(1981-83)	85=CJ-5 (1981-83)	66=Comanche 2WD-7 Ft. Box(1986)	26=J10 Truck 8 Ft. Box(1981-86)
73=Cherokee 2WD-2 Dr.(1984-86)	86=CJ-6(1981)	63=Comanche 4WD-6 Ft. Box(1986)	27=J-20 Truck 8 Ft. Box(1981-86)
74=Cherokee 2WD-4 Dr.(1984-86)	87=CJ-7(1981-86)	65=Comanche 4WD-7 Ft. Box(1986)	15=Wagoneer 4 Dr.(1981-83)
18=Cherokee 4 Dr.(1981-83)	88=CJ-8, Scrambler(1981-86)	15=Grand Wagoneer 4 Dr.(1984-86)	75=Wagoneer 4WD-4 Dr.(1984-86)
77=Cherokee 4WD-2 Dr.(1984-86)			

BODY
CJ=CJ-5, CJ-6, CJ-7, CJ-8, Scrambler(1981-86)
MJ=Comanche Pickup(1986)

STYLES
SJ=Wagoneer(1981-83), Grand Wagoneer(1984-86), Cherokee(1981-83), J-10, J-20(1981-86)
XJ=Wagoneer(1984-86), Cherokee(1984-86)

AR = Use as Required - = Non Illustrated Part P.A.R. = Paint as Required

FRAME AND COMPONENTS SJ CHEROKEE, SJ WAGONEER J10, J20
Figure 13-4300

81J13 4300

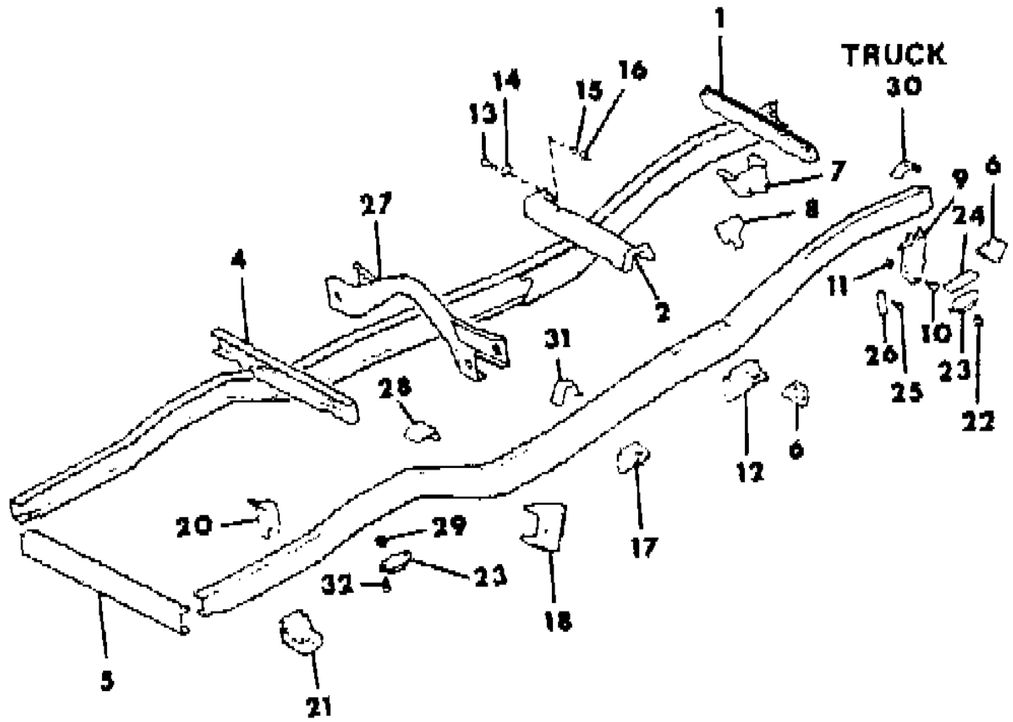

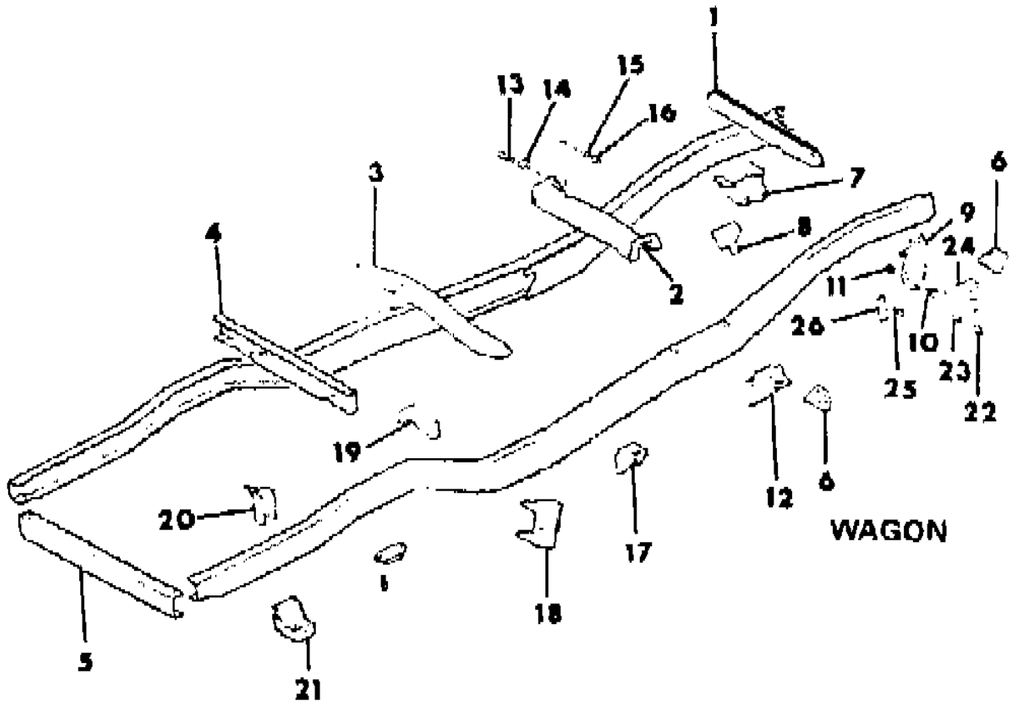

ITEM	PART NUMBER	QTY	BODY	MODEL	DESCRIPTION
					Truck
	J812 6852	1			Right
	J812 6851	1			Left
19					BRACKET
	J812 6854	1			Right
	J812 6853	1			Left
20					BRACKET
	J812 6859	2			Wagon
	J812 6858	2			Truck
21					BRACKET
	J812 6861	2			Wagon
	J812 6860	2			Truck
22					SCREW
	J400 5063	2			.62" long
	J400 3060	2			1.25" long
23	J535 5483	4			BUMPER, Axle
24	J536 1023	2			SPACER
25	J400 5063	8			SCREW
26	J535 3415	2			BRACKET
27	J813 3430	1			CROSSMEMBER, Center
28	J812 6855	2			BRACKET
29	J012 0376	4			NUT
30	J812 6803	2			BRACKET
31	J812 6841	2			BRACKET
32	J018 0078	4			BOLT

MODEL CODES

16=Cherokee 2 Dr.(1981-83)	78=Cherokee 4WD-4 Dr.(1984-86)	64=Comanche 2WD-6 Ft. Box(1986)	25=J-10 Truck 7 Ft. Box(1981-84)
17=Cherokee 2 Dr.(1981-83)	85=CJ-5 (1981-83)	66=Comanche 2WD-7 Ft. Box(1986)	26=J10 Truck 8 Ft. Box(1981-86)
73=Cherokee 2WD-2 Dr.(1984-86)	86=CJ-6(1981)	63=Comanche 4WD-6 Ft. Box(1986)	27=J-20 Truck 8 Ft. Box(1981-86)
74=Cherokee 2WD-4 Dr.(1984-86)	87=CJ-7(1981-86)	65=Comanche 4WD-7 Ft. Box(1986)	15=Wagoneer 4 Dr.(1981-83)
18=Cherokee 4 Dr.(1981-83)	88=CJ-8, Scrambler(1981-86)	15=Grand Wagoneer 4 Dr.(1984-86)	75=Wagoneer 4WD-4 Dr.(1984-86)
77=Cherokee 4WD-2 Dr.(1984-86)			

BODY
CJ=CJ-5, CJ-6, CJ-7, CJ-8, Scrambler(1981-86)
MJ=Comanche Pickup(1986)

STYLES
SJ=Wagoneer(1981-83), Grand Wagoneer(1984-86), Cherokee(1981-83), J-10, J-20(1981-86)
XJ=Wagoneer(1984-86), Cherokee(1984-86)

AR = Use as Required - = Non Illustrated Part P.A.R. = Paint as Required

« RETURN TO GROUP INDEX

MOUNTING HARDWARE, BODY SJ CHEROKEE, SJ WAGONEER J10, J20
Figure 13-4400

81J13 4400

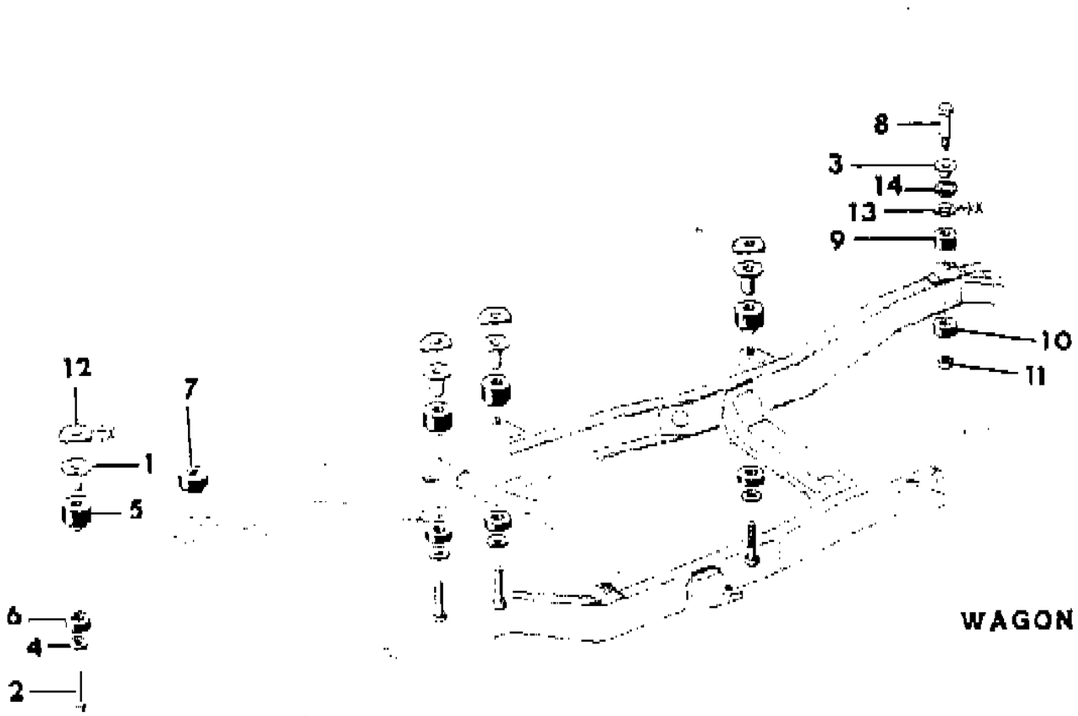

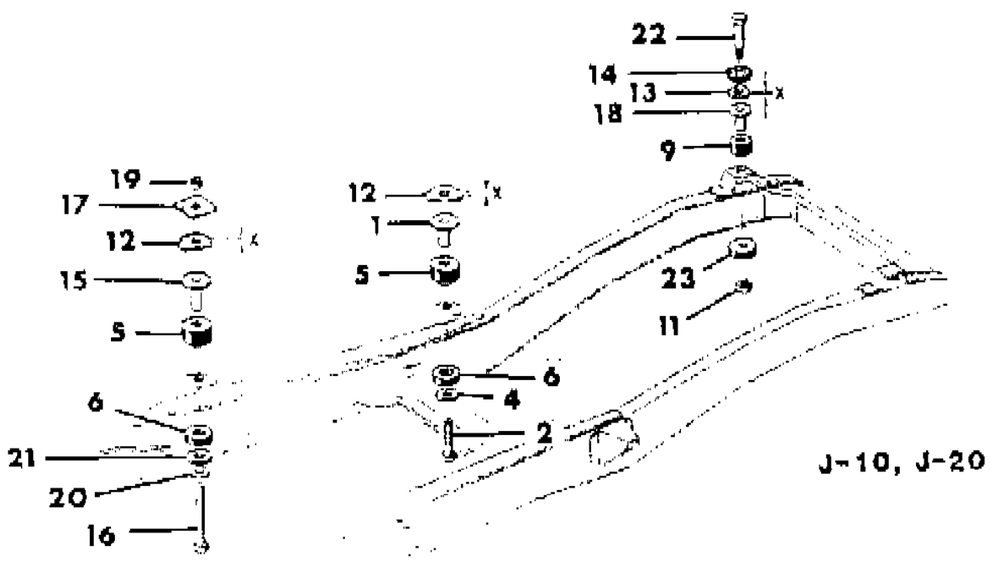

ITEM	PART NUMBER	QTY	BODY	MODEL	DESCRIPTION
1	J545 9181	AR			TUBE AND WASHER ***
2	S941 9091	AR			BOLT
3	J575 0380	2			TUBE AND WASHER ***
4	J400 6419	AR			WASHER, Flat
5	J545 9184	AR			INSULATOR
6	J545 9515	AR			INSULATOR
7	J545 9186	2			INSULATOR
8	J400 6418	2			BOLT
9	J575 0373	2			INSULATOR
10	J575 0374	2			INSULATOR
11	J400 6165	2			NUT, Flange
12					SHIM
	J400 6114	AR			.033" Thick
	J400 6115	AR			.060" Thick
13					WASHER
	J400 6411	AR			.032" Thick
	J400 6412	AR			.059" Thick
14	J400 6414	AR			SHIM
15	J545 9524	2			TUBE AND WASHER ***
16	J400 5667	2			BOLT
17	J099 4165	2			REINFORCEMENT
18	J575 0381	2			TUBE AND WASHER ***
19	J400 4005	2			NUT, Lock
20	J400 3805	2			WASHER
21	J400 6423	2			WASHER
22	J400 6417	2			BOLT
23	J575 0382	2			INSULATOR

MODEL CODES

16=Cherokee 2 Dr.(1981-83)
17=Cherokee 2 Dr.(1981-83)
73=Cherokee 2WD-2 Dr.(1984-86)
74=Cherokee 2WD-4 Dr.(1984-86)
18=Cherokee 4 Dr.(1981-83)
77=Cherokee 4WD-2 Dr.(1984-86)
78=Cherokee 4WD-4 Dr.(1984-86)
85=CJ-5 (1981-83)
86=CJ-6(1981)
87=CJ-7(1981-86)
88=CJ-8, Scrambler(1981-86)
64=Comanche 2WD-6 Ft. Box(1986)
66=Comanche 2WD-7 Ft. Box(1986)
63=Comanche 4WD-6 Ft. Box(1986)
65=Comanche 4WD-7 Ft. Box(1986)
15=Grand Wagoneer 4 Dr.(1984-86)
25=J-10 Truck 7 Ft. Box(1981-84)
26=J10 Truck 8 Ft. Box(1981-86)
27=J-20 Truck 8 Ft. Box(1981-86)
15=Wagoneer 4 Dr.(1981-83)
75=Wagoneer 4WD-4 Dr.(1984-86)

BODY
CJ=CJ-5, CJ-6, CJ-7, CJ-8, Scrambler(1981-86)
MJ=Comanche Pickup(1986)

STYLES
SJ=Wagoneer(1981-83), Grand Wagoneer(1984-86), Cherokee(1981-83), J-10, J-20(1981-86)
XJ=Wagoneer(1984-86), Cherokee(1984-86)

AR = Use as Required - = Non Illustrated Part P.A.R. = Paint as Required

« RETURN TO GROUP INDEX

BUMPER, FRONT SJ CHEROKEE, SJ WAGONEER J10, J20
Figure 13-4500

81J13 4500

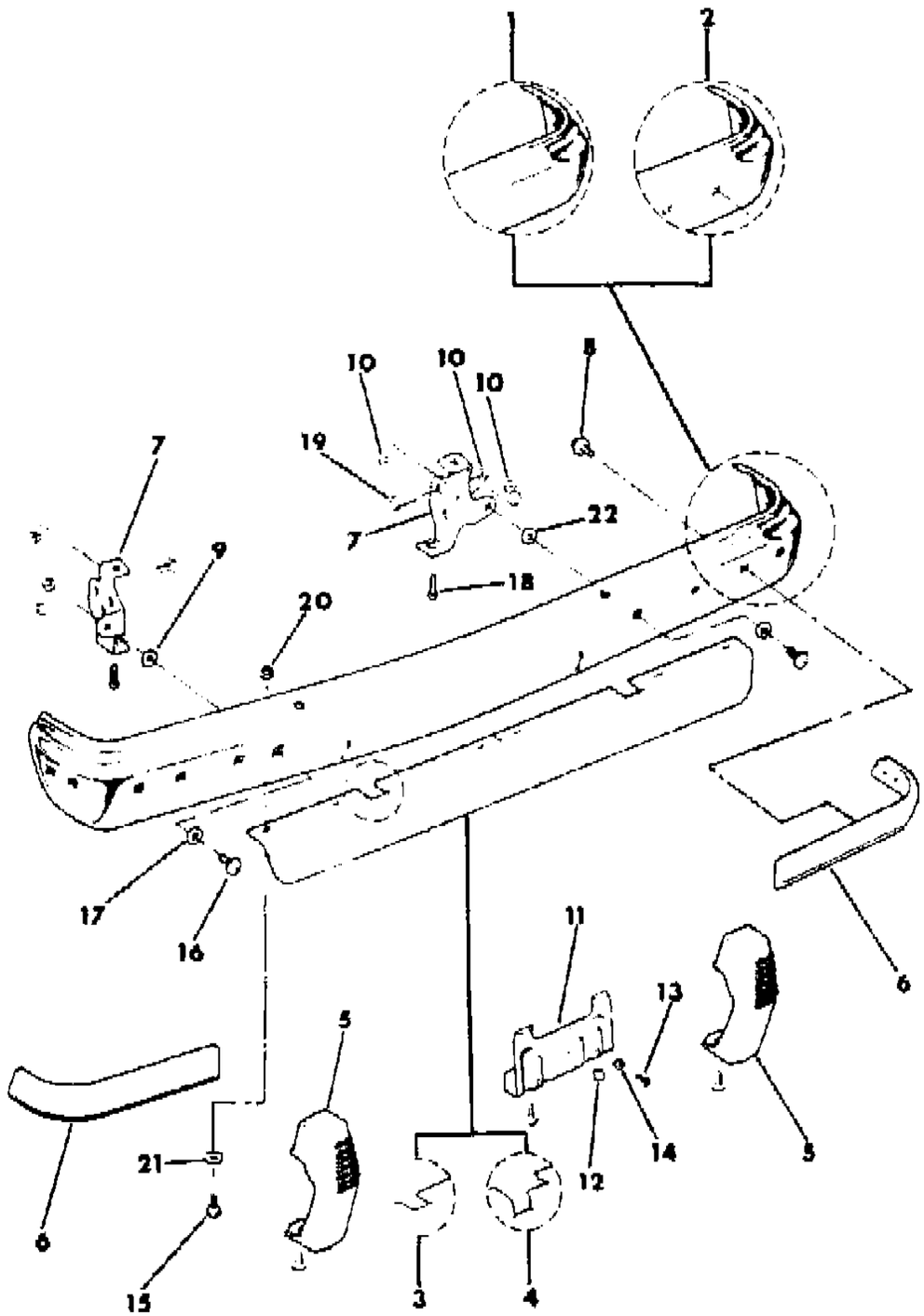

ITEM	PART NUMBER	QTY	BODY	MODEL	DESCRIPTION
1					RAIL, Bumper
					Aluminum
	J536 3152	1			15,16,18
	J536 3153	1			17,25,26,27
					Chrome
	J535 8537	1			15,16,18
	J535 8538	1			17,25,26,27
2	J536 3154	1		15	RAIL, Bumper, Aluminum
3					DEFLECTOR, Air
	J575 2880	1			1981
	J576 1927	1			1982-86
4					DEFLECTOR, Air
	J575 8693	1			1981: 16,17,18,25,26,27
	J576 1928	1			1982-86:16,17,18,25,26,27
5					GUARD, Bumper
	J536 2881	1			Right
	J536 2882	1			Left
6					GUARD, Bumper
	J575 1271	1			Right
	J575 1272	1			Left
7					BRACKET, Mounting
					Wagon
	J535 8686	1			Right
	J535 8685	1			Left
					Truck
	J535 8688	1			Right
	J535 8687	1			Left
8					SCREW
	J400 6641	10			1981
	J400 7000	10			1982-86
9	J400 6696	2			WASHER
10	J400 3956	AR			NUT
11					BRACKET, License
	J322 5425	1			
	J536 1917	1			EXPORT
12	J400 3508	1			BUMPER
13	J942 6241	2			SCREW
14	J400 5265	2			NUT
15	J400 6801	6			SCREW

MODEL CODES

16=Cherokee 2 Dr.(1981-83)
17=Cherokee 2 Dr.(1981-83)
73=Cherokee 2WD-2 Dr.(1984-86)
74=Cherokee 2WD-4 Dr.(1984-86)
18=Cherokee 4 Dr.(1981-83)
77=Cherokee 4WD-2 Dr.(1984-86)
78=Cherokee 4WD-4 Dr.(1984-86)
85=CJ-5 (1981-83)
86=CJ-6(1981)
87=CJ-7(1981-86)
88=CJ-8, Scrambler(1981-86)
64=Comanche 2WD-6 Ft. Box(1986)
66=Comanche 2WD-7 Ft. Box(1986)
63=Comanche 4WD-6 Ft. Box(1986)
65=Comanche 4WD-7 Ft. Box(1986)
15=Grand Wagoneer 4 Dr.(1984-86)
25=J-10 Truck 7 Ft. Box(1981-84)
26=J10 Truck 8 Ft. Box(1981-86)
27=J-20 Truck 8 Ft. Box(1981-86)
15=Wagoneer 4 Dr.(1981-83)
75=Wagoneer 4WD-4 Dr.(1984-86)

BODY
CJ=CJ-5, CJ-6, CJ-7, CJ-8, Scrambler(1981-86)
MJ=Comanche Pickup(1986)

STYLES
SJ=Wagoneer(1981-83), Grand Wagoneer(1984-86), Cherokee(1981-83), J-10, J-20(1981-86)
XJ=Wagoneer(1984-86), Cherokee(1984-86)

AR = Use as Required - = Non Illustrated Part P.A.R. = Paint as Required

BUMPER, FRONT SJ CHEROKEE, SJ WAGONEER J10, J20
Figure 13-4500

81J13 4500

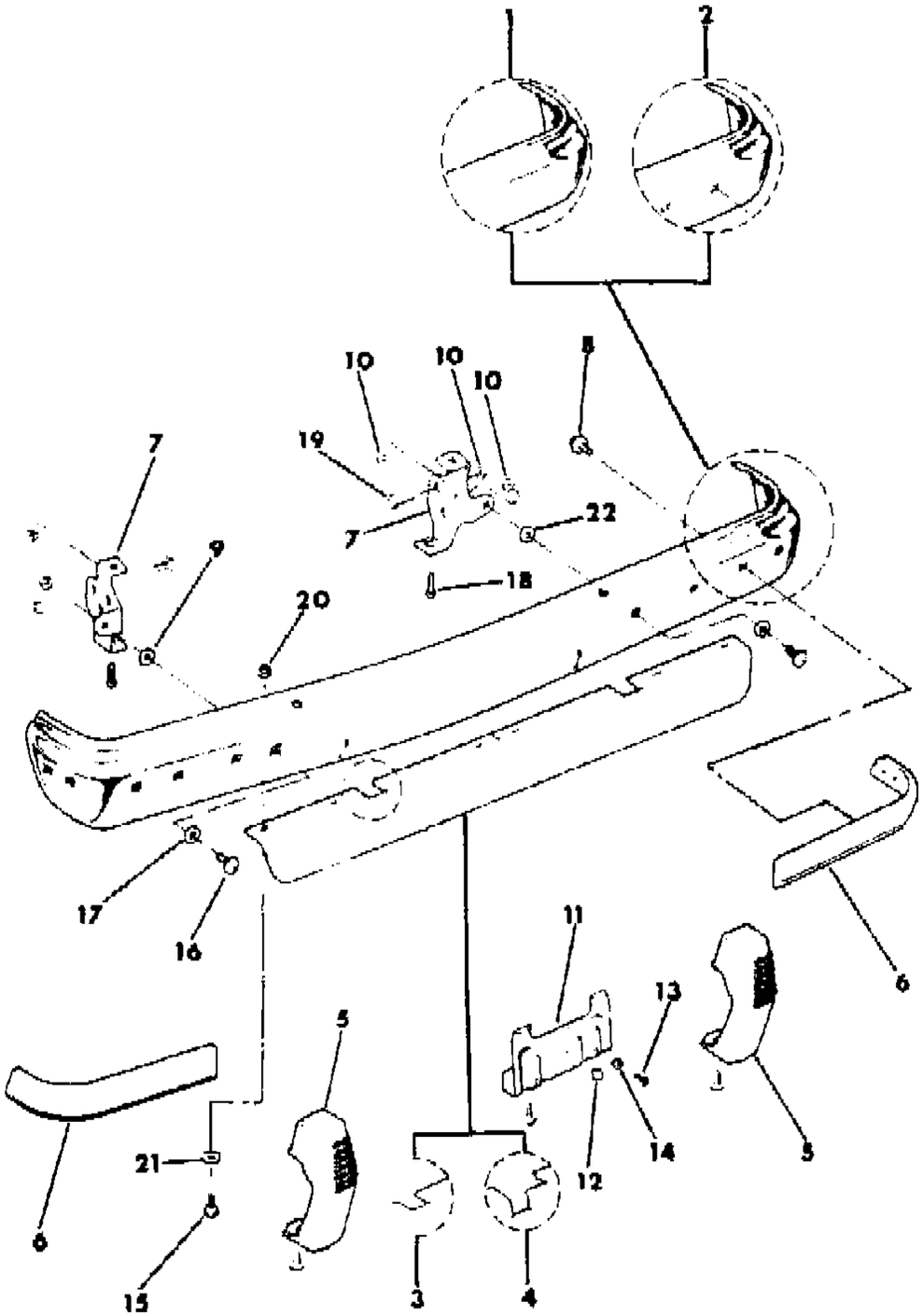

ITEM	PART NUMBER	QTY	BODY	MODEL	DESCRIPTION
16	J400 6868	AR			BOLT
17	J535 9296	AR			INSULATOR
18	J400 6611	2			BOLT
19	J812 1353	6			SCREW
20	J400 4469	6			NUT
21	J536 2021	6			INSULATOR
22					WASHER
	J400 6447	10			1981: Plain
	J400 6640	10			1981: Nylon

MODEL CODES
16=Cherokee 2 Dr.(1981-83)
17=Cherokee 2 Dr.(1981-83)
73=Cherokee 2WD-2 Dr.(1984-86)
74=Cherokee 2WD-4 Dr.(1984-86)
18=Cherokee 4 Dr.(1981-83)
77=Cherokee 4WD-2 Dr.(1984-86)
78=Cherokee 4WD-4 Dr.(1984-86)
85=CJ-5 (1981-83)
86=CJ-6(1981)
87=CJ-7(1981-86)
88=CJ-8, Scrambler(1981-86)
64=Comanche 2WD-6 Ft. Box(1986)
66=Comanche 2WD-7 Ft. Box(1986)
63=Comanche 4WD-6 Ft. Box(1986)
65=Comanche 4WD-7 Ft. Box(1986)
15=Grand Wagoneer 4 Dr.(1984-86)
25=J-10 Truck 7 Ft. Box(1981-84)
26=J10 Truck 8 Ft. Box(1981-86)
27=J-20 Truck 8 Ft. Box(1981-86)
15=Wagoneer 4 Dr.(1981-83)
75=Wagoneer 4WD-4 Dr.(1984-86)

BODY
CJ=CJ-5, CJ-6, CJ-7, CJ-8, Scrambler(1981-86)
MJ=Comanche Pickup(1986)

STYLES
SJ=Wagoneer(1981-83), Grand Wagoneer(1984-86), Cherokee(1981-83), J-10, J-20(1981-86)
XJ=Wagoneer(1984-86), Cherokee(1984-86)

AR = Use as Required - = Non Illustrated Part P.A.R. = Paint as Required

« RETURN TO GROUP INDEX

BRUSH GUARD, FRONT J10, J20
Figure 13-4600

81J13 4600

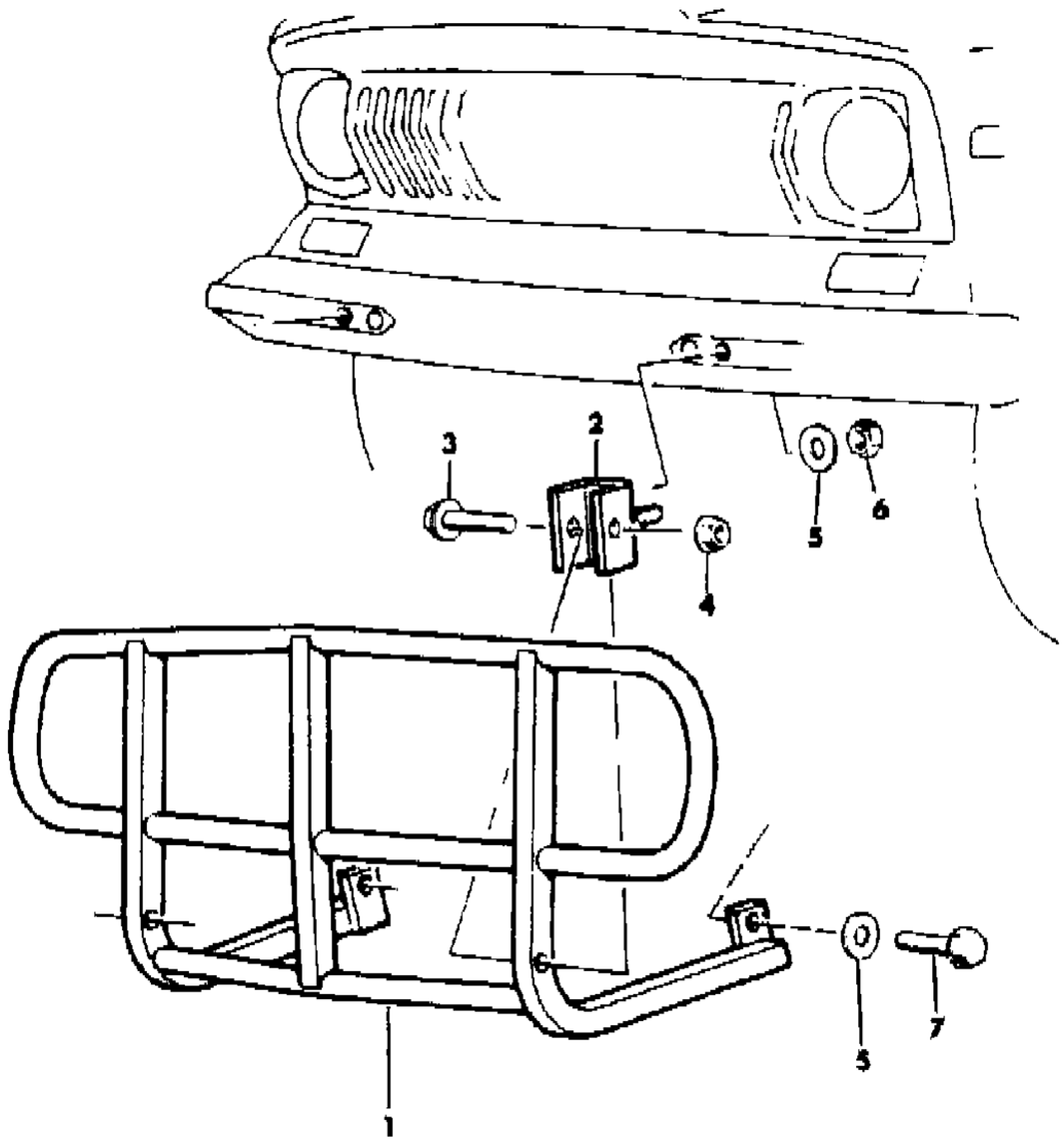

ITEM	PART NUMBER	QTY	BODY	MODEL	DESCRIPTION
1	J207 3314	1			GUARD, Brush
2	J546 3997	2			BRACKET
3	J812 1785	2			BOLT
4	J400 4005	2			NUT
5	J400 1104	AR			WASHER
6	J400 4008	AR			NUT
7	J018 0147	2			BOLT

MODEL CODES

16=Cherokee 2 Dr.(1981-83)
17=Cherokee 2 Dr.(1981-83)
73=Cherokee 2WD-2 Dr.(1984-86)
74=Cherokee 2WD-4 Dr.(1984-86)
18=Cherokee 4 Dr.(1981-83)
77=Cherokee 4WD-2 Dr.(1984-86)
78=Cherokee 4WD-4 Dr.(1984-86)
85=CJ-5 (1981-83)
86=CJ-6(1981)
87=CJ-7(1981-86)
88=CJ-8, Scrambler(1981-86)
64=Comanche 2WD-6 Ft. Box(1986)
66=Comanche 2WD-7 Ft. Box(1986)
63=Comanche 4WD-6 Ft. Box(1986)
65=Comanche 4WD-7 Ft. Box(1986)
15=Grand Wagoneer 4 Dr.(1984-86)
25=J-10 Truck 7 Ft. Box(1981-84)
26=J10 Truck 8 Ft. Box(1981-86)
27=J-20 Truck 8 Ft. Box(1981-86)
15=Wagoneer 4 Dr.(1981-83)
75=Wagoneer 4WD-4 Dr.(1984-86)

BODY
CJ=CJ-5, CJ-6, CJ-7, CJ-8, Scrambler(1981-86)
MJ=Comanche Pickup(1986)

STYLES
SJ=Wagoneer(1981-83), Grand Wagoneer(1984-86), Cherokee(1981-83), J-10, J-20(1981-86)
XJ=Wagoneer(1984-86), Cherokee(1984-86)

AR = Use as Required - = Non Illustrated Part P.A.R. = Paint as Required

« RETURN TO GROUP INDEX

BUMPERS, REAR SJ CHEROKEE, SJ WAGONEER, J10, J20
Figure 13-4700

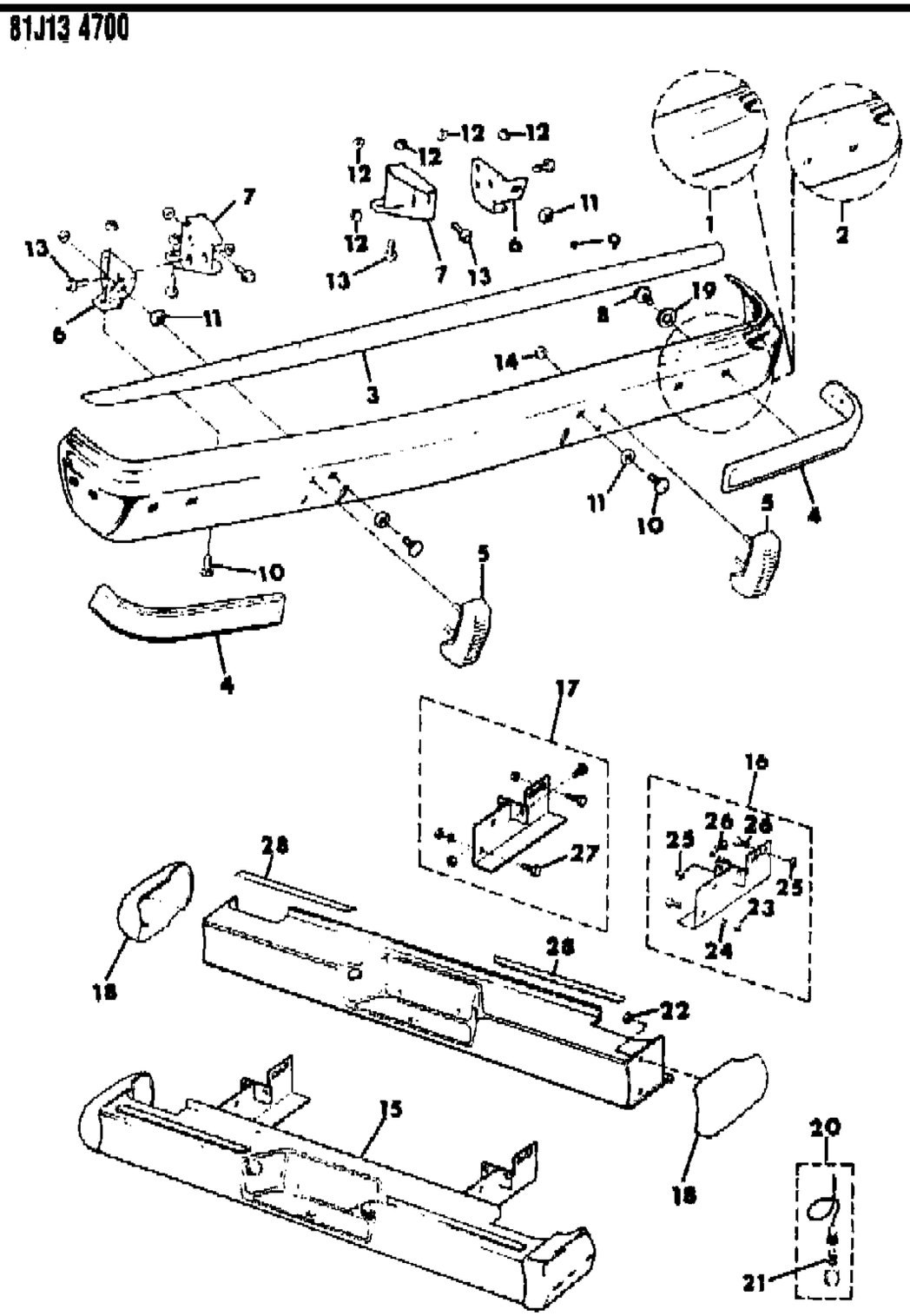

ITEM	PART NUMBER	QTY	BODY	MODEL	DESCRIPTION
1					RAIL, Bumper
	J536 3156	1			Aluminum
	J535 8539	1			Chrome
2	J536 3157	1			RAIL, Bumper, Aluminum
3	J576 4753	1			DEFLECTOR
4					GUARD, Bumper
	J575 1374	1			Right
	J575 1373	1			Left
5					GUARD, Bumper
	J575 1658	1			Right
	J575 1657	1			Left
6					BRACKET, Bumper
	J535 8730	1			Right ***
	J535 8729	1			Left
7					BRACKET, Extension
	J535 8732	1			Right
	J535 8731	1			Left
8					SCREW
	J400 6641	8			1981
	J400 7000	8			1982-86
9	J400 4822	12			RIVET
10	J400 6123	4			BOLT
11					INSULATOR
	J535 9296	4			1.22"O.D.
	J536 2021	4			2.00"O.D.
12	J400 3956	AR			NUT
13	J812 1353	AR			SCREW
14	J400 6080	4			NUT
15	J210 9017	1			BUMPER, Rear Step
16					BRACKET PACKAGE ***
	J813 2027	1			1981
	J813 1394	1			1982-86
17					BRACKET PACKAGE ***
	J813 2028	1			1981
	J813 1395	1			1982-86
18					CAP, End
	J813 1226	2			1981
					1982-86
	J536 3171	1			Right

MODEL CODES

16=Cherokee 2 Dr.(1981-83)	78=Cherokee 4WD-4 Dr.(1984-86)	64=Comanche 2WD-6 Ft. Box(1986)	25=J-10 Truck 7 Ft. Box(1981-84)
17=Cherokee 2 Dr.(1981-83)	85=CJ-5 (1981-83)	66=Comanche 2WD-7 Ft. Box(1986)	26=J10 Truck 8 Ft. Box(1981-86)
73=Cherokee 2WD-2 Dr.(1984-86)	86=CJ-6(1981)	63=Comanche 4WD-6 Ft. Box(1986)	27=J-20 Truck 8 Ft. Box(1981-86)
74=Cherokee 2WD-4 Dr.(1984-86)	87=CJ-7(1981-86)	65=Comanche 4WD-7 Ft. Box(1986)	15=Wagoneer 4 Dr.(1981-83)
18=Cherokee 4 Dr.(1981-83)	88=CJ-8, Scrambler(1981-86)	15=Grand Wagoneer 4 Dr.(1984-86)	75=Wagoneer 4WD-4 Dr.(1984-86)
77=Cherokee 4WD-2 Dr.(1984-86)			

BODY
CJ=CJ-5, CJ-6, CJ-7, CJ-8, Scrambler(1981-86)
MJ=Comanche Pickup(1986)

STYLES
SJ=Wagoneer(1981-83), Grand Wagoneer(1984-86), Cherokee(1981-83), J-10, J-20(1981-86)
XJ=Wagoneer(1984-86), Cherokee(1984-86)

AR = Use as Required - = Non Illustrated Part P.A.R. = Paint as Required

« RETURN TO GROUP INDEX »

BUMPERS, REAR SJ CHEROKEE, SJ WAGONEER, J10, J20
Figure 13-4700

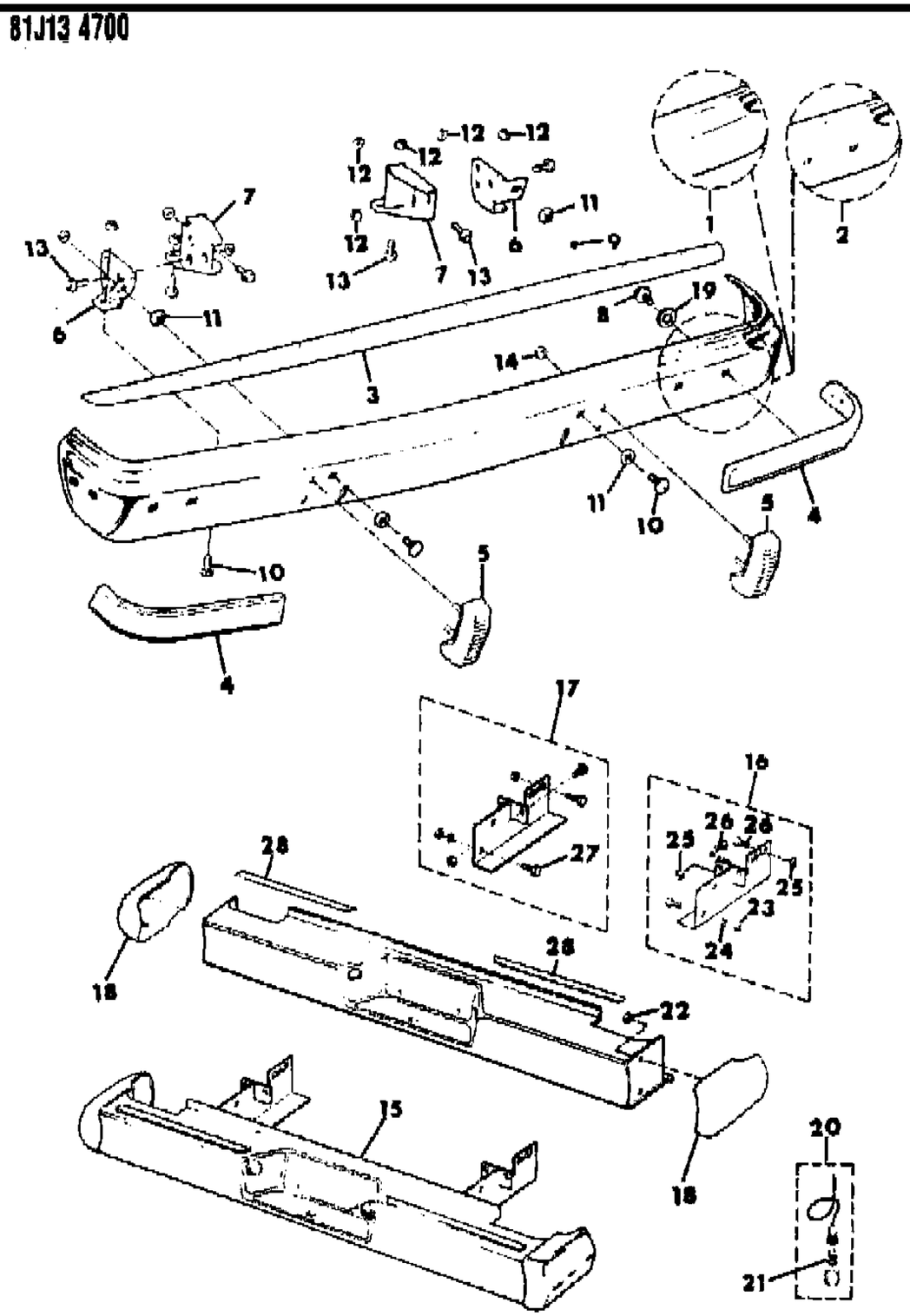

ITEM	PART NUMBER	QTY	BODY	MODEL	DESCRIPTION
	J536 3170	1			Left
19					WASHER
	J400 6447	8			Plain
	J400 6640	8			Nylon
20	J211 0002	2			LIGHT PACKAGE ***
21	S014 2450	2			BULB, Coded "67"
22	J027 1184	4			NUT: 1982-86 ***
23					NUT
	J400 3956	6			1981
	J400 5098	2			1982-86
24	J400 1134	2			WASHER: 1982-86 ***
25					NUT
	J400 3956	6			1981
	J400 4005	4			1982-86
26	S018 0147	4			BOLT
27					BOLT
	S018 0147	2			1981
	J941 9099	2			1982-86
28	J536 3902-3	1			STRIP, Skid ***

MODEL CODES

16=Cherokee 2 Dr.(1981-83)	78=Cherokee 4WD-4 Dr.(1984-86)	64=Comanche 2WD-6 Ft. Box(1986)	25=J-10 Truck 7 Ft. Box(1981-84)
17=Cherokee 2 Dr.(1981-83)	85=CJ-5 (1981-83)	66=Comanche 2WD-7 Ft. Box(1986)	26=J10 Truck 8 Ft. Box(1981-86)
73=Cherokee 2WD-2 Dr.(1984-86)	86=CJ-6(1981)	63=Comanche 4WD-6 Ft. Box(1986)	27=J-20 Truck 8 Ft. Box(1981-86)
74=Cherokee 2WD-4 Dr.(1984-86)	87=CJ-7(1981-86)	65=Comanche 4WD-7 Ft. Box(1986)	15=Wagoneer 4 Dr.(1981-83)
18=Cherokee 4 Dr.(1981-83)	88=CJ-8, Scrambler(1981-86)	15=Grand Wagoneer 4 Dr.(1984-86)	75=Wagoneer 4WD-4 Dr.(1984-86)
77=Cherokee 4WD-2 Dr.(1984-86)			

BODY
CJ=CJ-5, CJ-6, CJ-7, CJ-8, Scrambler(1981-86)
MJ=Comanche Pickup(1986)

STYLES
SJ=Wagoneer(1981-83), Grand Wagoneer(1984-86), Cherokee(1981-83), J-10, J-20(1981-86)
XJ=Wagoneer(1984-86), Cherokee(1984-86)

AR = Use as Required - = Non Illustrated Part P.A.R. = Paint as Required

« RETURN TO GROUP INDEX

BUMPERETTES, REAR SEVERE USE, EXPORT J20
Figure 13-4800

81J13 4800

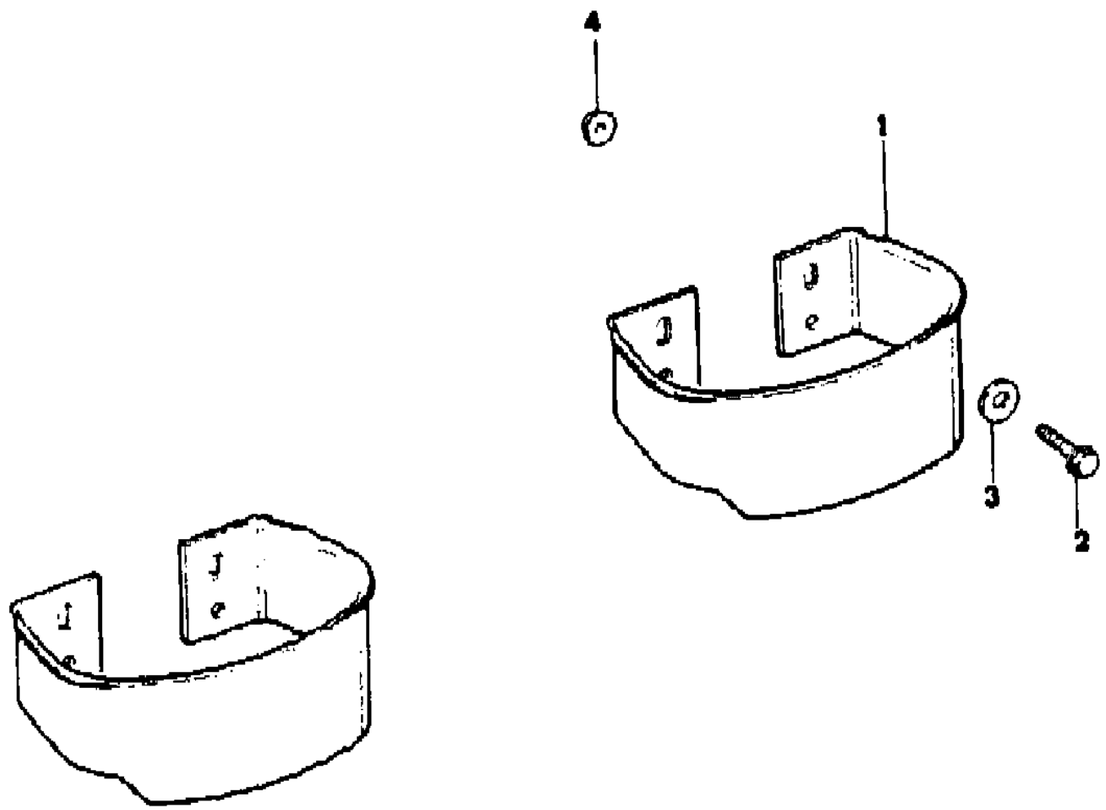

ITEM	PART NUMBER	QTY	BODY	MODEL	DESCRIPTION
1	J597 5168	2			BUMPERETTE, Rear, Black ***
2	J400 7064	8			BOLT
3	J243 6164	16			WASHER
4	J942 2299	8			NUT

MODEL CODES

16=Cherokee 2 Dr.(1981-83)	78=Cherokee 4WD-4 Dr.(1984-86)	64=Comanche 2WD-6 Ft. Box(1986)	25=J-10 Truck 7 Ft. Box(1981-84)
17=Cherokee 2 Dr.(1981-83)	85=CJ-5 (1981-83)	66=Comanche 2WD-7 Ft. Box(1986)	26=J10 Truck 8 Ft. Box(1981-86)
73=Cherokee 2WD-2 Dr.(1984-86)	86=CJ-6(1981)	63=Comanche 4WD-6 Ft. Box(1986)	27=J-20 Truck 8 Ft. Box(1981-86)
74=Cherokee 2WD-4 Dr.(1984-86)	87=CJ-7(1981-86)	65=Comanche 4WD-7 Ft. Box(1986)	15=Wagoneer 4 Dr.(1981-83)
18=Cherokee 4 Dr.(1981-83)	88=CJ-8, Scrambler(1981-86)	15=Grand Wagoneer 4 Dr.(1984-86)	75=Wagoneer 4WD-4 Dr.(1984-86)
77=Cherokee 4WD-2 Dr.(1984-86)			

BODY
CJ=CJ-5, CJ-6, CJ-7, CJ-8, Scrambler(1981-86)
MJ=Comanche Pickup(1986)

STYLES
SJ=Wagoneer(1981-83), Grand Wagoneer(1984-86), Cherokee(1981-83), J-10, J-20(1981-86)
XJ=Wagoneer(1984-86), Cherokee(1984-86)

AR = Use as Required - = Non Illustrated Part P.A.R. = Paint as Required

« RETURN TO GROUP INDEX

HARNESS, TRAILER TOWING WITHOUT EQUALIZER HITCH SJ CHEROKEE, SJ WAGONEER
Figure 13-4900

81J13 4900

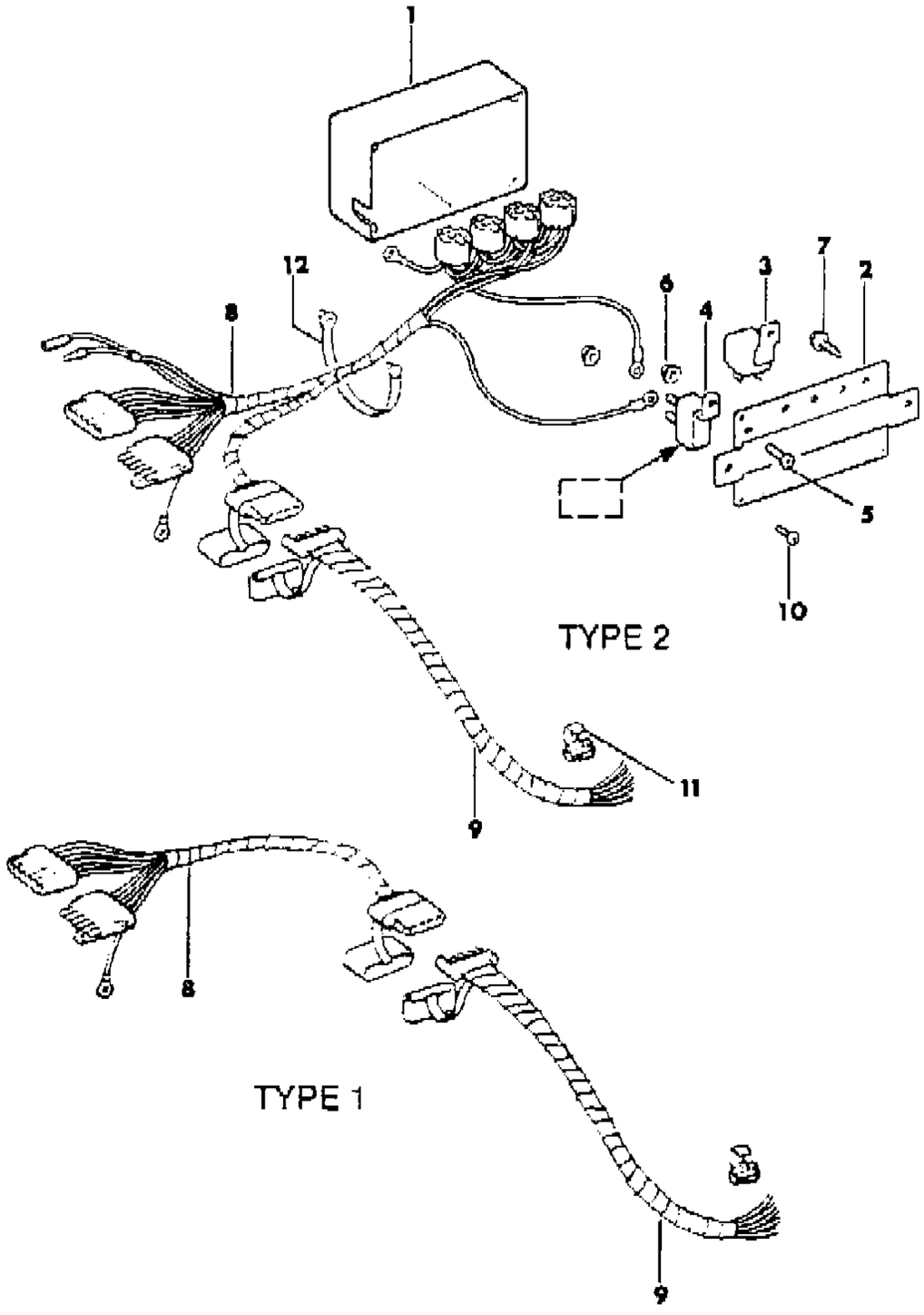

ITEM	PART NUMBER	QTY	BODY	MODEL	DESCRIPTION
1	J545 5334	1			BOX ***
2	J545 5345	1			COVER
3					RELAY
	J545 5283	3			1981
	J545 5283	3		15	1982-83
	J323 9709	3		16,17,1	1982-83
	J323 9709	4		15	1984-86
4					BREAKER, Circuit ***
	8350 1394	1			10 AMP
	J545 5362	1			20 AMP
5	J017 9276	6			SCREW
6	J027 1169	6			NUT
7	J400 4504	AR			BOLT
8					HARNESS, Trailer Towing
	J545 5279	1			1981
	J576 1919	1		15	1982-83: Type 1
	J576 1921	1		15	1982-83: Type 2
	J576 1921	1		16,17,1	1982-83: Type 2
9					HARNESS, Trailer Towing
	J545 5280	1			1981-83
	J323 8838	1		15	1984-86
10	J400 4801	4			SCREW
11	J318 6888	1			CONNECTOR
12	J322 3227	1			STRAP

MODEL CODES

16=Cherokee 2 Dr.(1981-83)
17=Cherokee 2 Dr.(1981-83)
73=Cherokee 2WD-2 Dr.(1984-86)
74=Cherokee 2WD-4 Dr.(1984-86)
18=Cherokee 4 Dr.(1981-83)
77=Cherokee 4WD-2 Dr.(1984-86)
78=Cherokee 4WD-4 Dr.(1984-86)
85=CJ-5 (1981-83)
86=CJ-6(1981)
87=CJ-7(1981-86)
88=CJ-8, Scrambler(1981-86)
64=Comanche 2WD-6 Ft. Box(1986)
66=Comanche 2WD-7 Ft. Box(1986)
63=Comanche 4WD-6 Ft. Box(1986)
65=Comanche 4WD-7 Ft. Box(1986)
15=Grand Wagoneer 4 Dr.(1984-86)
25=J-10 Truck 7 Ft. Box(1981-84)
26=J10 Truck 8 Ft. Box(1981-86)
27=J-20 Truck 8 Ft. Box(1981-86)
15=Wagoneer 4 Dr.(1981-83)
75=Wagoneer 4WD-4 Dr.(1984-86)

BODY
CJ=CJ-5, CJ-6, CJ-7, CJ-8, Scrambler(1981-86)
MJ=Comanche Pickup(1986)

STYLES
SJ=Wagoneer(1981-83), Grand Wagoneer(1984-86), Cherokee(1981-83), J-10, J-20(1981-86)
XJ=Wagoneer(1984-86), Cherokee(1984-86)

AR = Use as Required - = Non Illustrated Part P.A.R. = Paint as Required

« RETURN TO GROUP INDEX

HARNESS, TRAILER TOWING WITHOUT EQUALIZER HITCH SJ CHEROKEE, SJ WAGONEER
Figure 13-4900

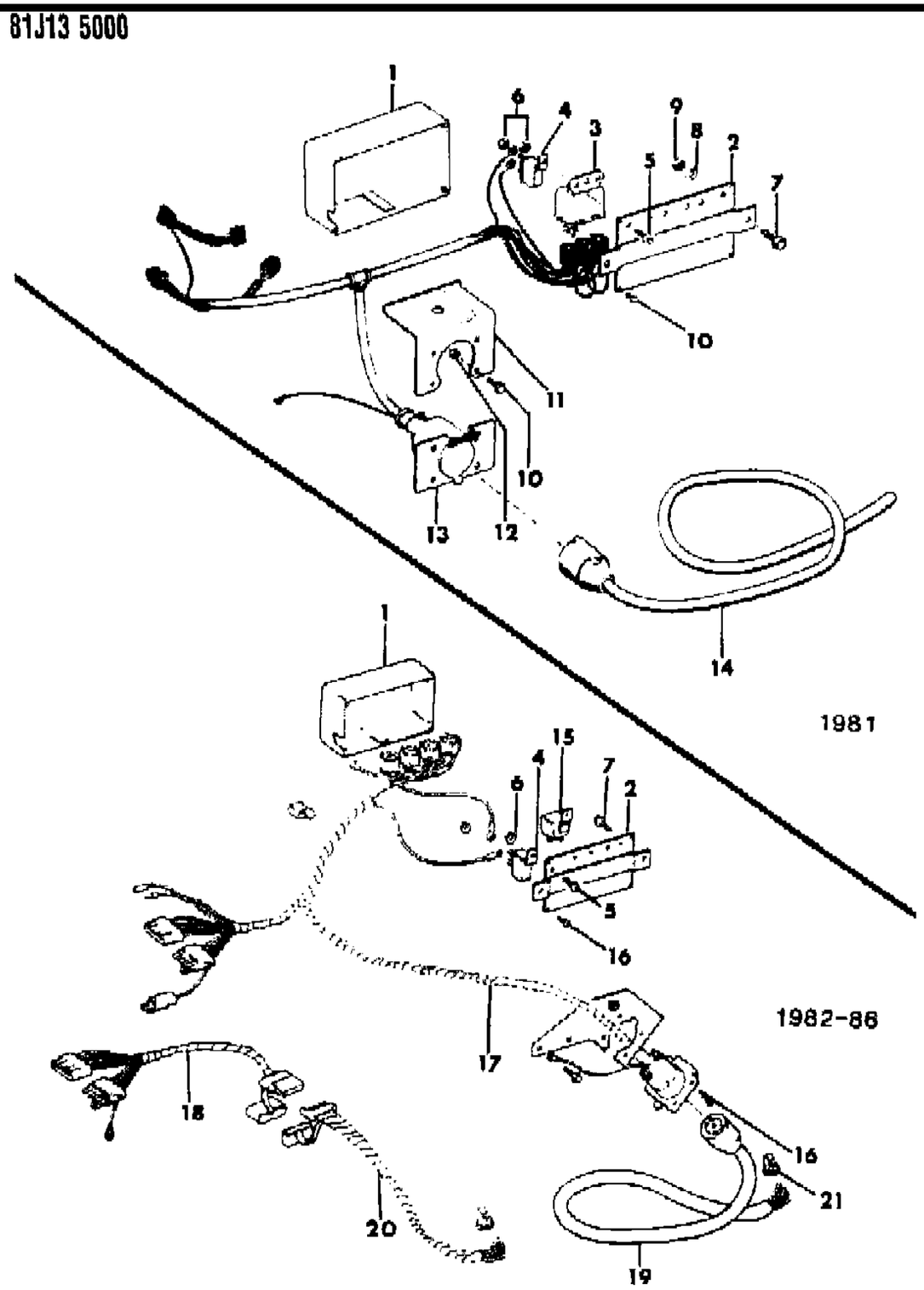

ITEM	PART NUMBER	QTY	BODY	MODEL	DESCRIPTION
1	J545 5334	1			BOX ***
2	J545 5345	1			COVER
3	J545 5283	3			RELAY
4					BREAKER, Circuit ***
	8350 1394	1			10 Amp
	J545 5362	1			20 Amp
5	J017 9276	6			SCREW
6	J027 1169	6			NUT
7	J400 4504	2			BOLT
8	J017 4916	2			WASHER, Lock
9	J012 0375	2			NUT
10	J400 4801	AR			SCREW
11	J535 3442	1			BRACKET
12	J400 5098	2			NUT
13	J812 7800	1			HARNESS, Trailer Towing
14	J545 5349	1			HARNESS, Trailer Towing
15	J323 9709	1			RELAY: 1982-86 ***
16	J400 4801	4			BOLT
17					HARNESS, Trailer Towing
	J576 1761	1			1982: Cherokee
	J576 4046	1			1983-86
18	J576 1354	1			HARNESS, Trailer Towing
19	J545 5349	1			HARNESS, Trailer Towing
20	J545 5280	1			HARNESS, Trailer Towing
21	J318 6888	1			CONNECTOR

MODEL CODES

16=Cherokee 2 Dr.(1981-83)	78=Cherokee 4WD-4 Dr.(1984-86)	64=Comanche 2WD-6 Ft. Box(1986)	25=J-10 Truck 7 Ft. Box(1981-84)
17=Cherokee 2 Dr.(1981-83)	85=CJ-5 (1981-83)	66=Comanche 2WD-7 Ft. Box(1986)	26=J10 Truck 8 Ft. Box(1981-86)
73=Cherokee 2WD-2 Dr.(1984-86)	86=CJ-6(1981)	63=Comanche 4WD-6 Ft. Box(1986)	27=J-20 Truck 8 Ft. Box(1981-86)
74=Cherokee 2WD-4 Dr.(1984-86)	87=CJ-7(1981-86)	65=Comanche 4WD-7 Ft. Box(1986)	15=Wagoneer 4 Dr.(1981-83)
18=Cherokee 4 Dr.(1981-83)	88=CJ-8, Scrambler(1981-86)	15=Grand Wagoneer 4 Dr.(1984-86)	75=Wagoneer 4WD-4 Dr.(1984-86)
77=Cherokee 4WD-2 Dr.(1984-86)			

BODY
CJ=CJ-5, CJ-6, CJ-7, CJ-8, Scrambler(1981-86)
MJ=Comanche Pickup(1986)

STYLES
SJ=Wagoneer(1981-83), Grand Wagoneer(1984-86), Cherokee(1981-83), J-10, J-20(1981-86)
XJ=Wagoneer(1984-86), Cherokee(1984-86)

AR = Use as Required - = Non Illustrated Part P.A.R. = Paint as Required

« RETURN TO GROUP INDEX

HITCH, TRAILER PINTLE HOOK J10, J20
Figure 13-5100

81J13 5100

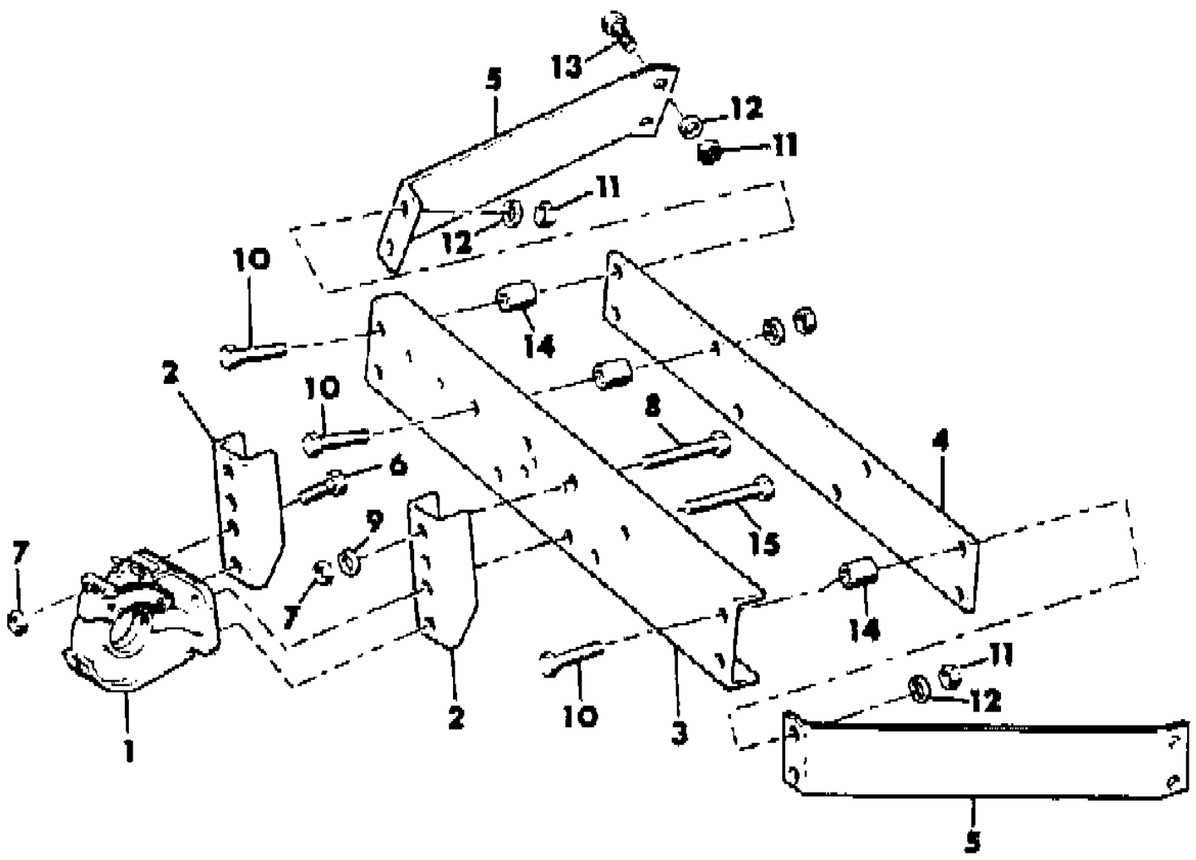

ITEM	PART NUMBER	QTY	BODY	MODEL	DESCRIPTION
1	J096 1171	1			HOOK, Pintle
2	J093 0403	2			BRACKET
3	J093 0404	1			REINFORCEMENT
4	J093 2311	1			PLATE
5	J535 4021	2			BRACE
6	J941 9099	3			BOLT
7	S012 0378	7			NUT
8	J999 8111	3			BOLT
9	S012 0384	3			WASHER
10	J018 0132	8			BOLT
11	J012 0377	12			NUT
12	J012 0382	12			WASHER
13	J018 0122	4			BOLT
14	J093 2292	8			SPACER
15	J999 8130	1			BOLT

MODEL CODES

16=Cherokee 2 Dr.(1981-83)
17=Cherokee 2 Dr.(1981-83)
73=Cherokee 2WD-2 Dr.(1984-86)
74=Cherokee 2WD-4 Dr.(1984-86)
18=Cherokee 4 Dr.(1981-83)
77=Cherokee 4WD-2 Dr.(1984-86)
78=Cherokee 4WD-4 Dr.(1984-86)
85=CJ-5 (1981-83)
86=CJ-6(1981)
87=CJ-7(1981-86)
88=CJ-8, Scrambler(1981-86)
64=Comanche 2WD-6 Ft. Box(1986)
66=Comanche 2WD-7 Ft. Box(1986)
63=Comanche 4WD-6 Ft. Box(1986)
65=Comanche 4WD-7 Ft. Box(1986)
15=Grand Wagoneer 4 Dr.(1984-86)
25=J-10 Truck 7 Ft. Box(1981-84)
26=J10 Truck 8 Ft. Box(1981-86)
27=J-20 Truck 8 Ft. Box(1981-86)
15=Wagoneer 4 Dr.(1981-83)
75=Wagoneer 4WD-4 Dr.(1984-86)

BODY
CJ=CJ-5, CJ-6, CJ-7, CJ-8, Scrambler(1981-86)
MJ=Comanche Pickup(1986)

STYLES
SJ=Wagoneer(1981-83), Grand Wagoneer(1984-86), Cherokee(1981-83), J-10, J-20(1981-86)
XJ=Wagoneer(1984-86), Cherokee(1984-86)

AR = Use as Required - = Non Illustrated Part P.A.R. = Paint as Required

« RETURN TO GROUP INDEX

WINCH MOUNTING RAMSEY 2000 0R 2001 SJ CHEROKEE, SJ WAGONEER, J10, J20
Figure 13-5200

81J13 5200

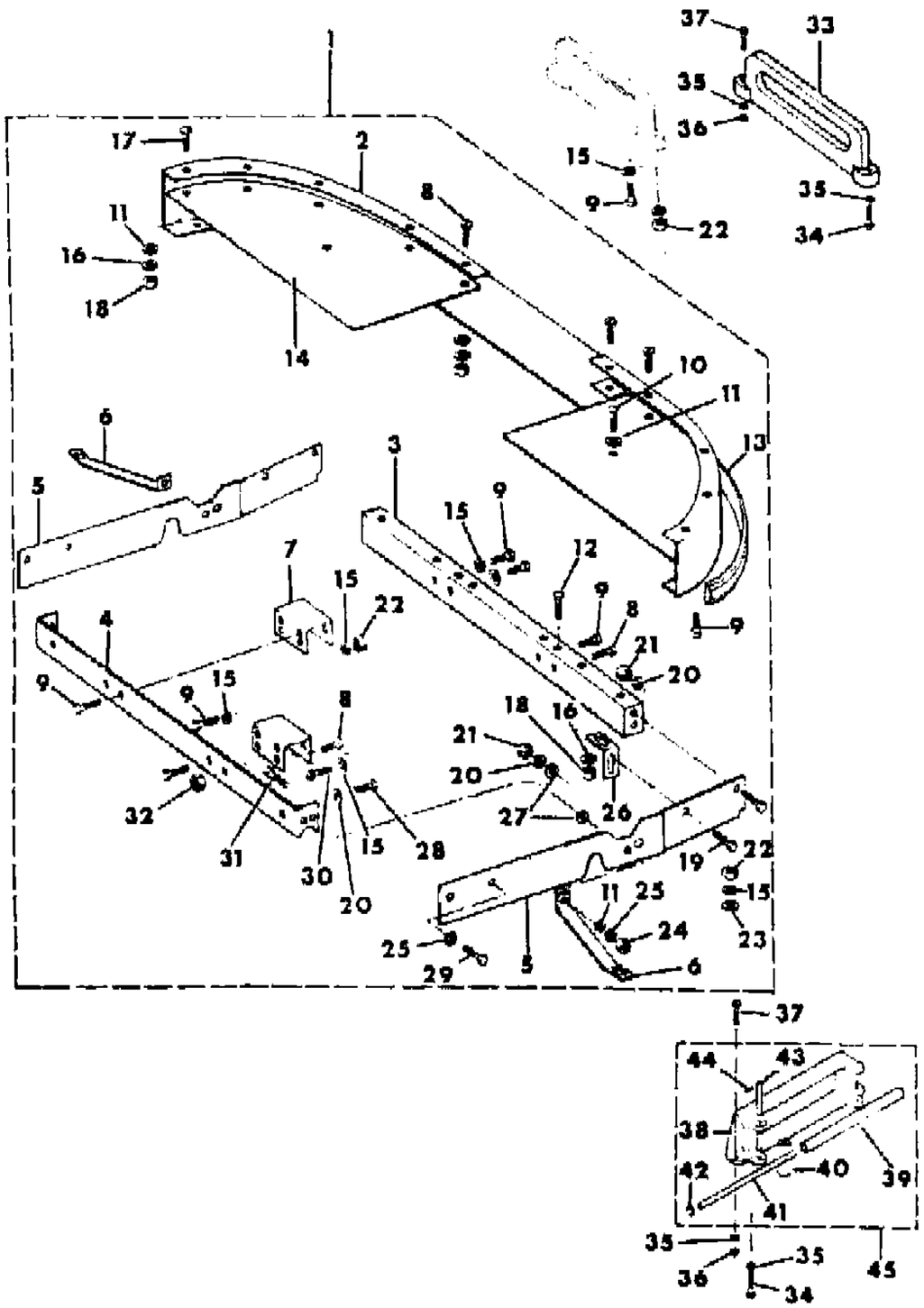

ITEM	PART NUMBER	QTY	BODY	MODEL	DESCRIPTION
1					MOUNTING PACKAGE, Winch ***
	J206 1505	1			Black
	J206 1504	1			Chrome
2					RAIL, Bumper
	J813 1055	1			Black
	J813 1164	1			Chrome
3	J813 1048	1			BAR
4	J813 1159	1			BAR
5	J813 1160-1	1			BRACKET
6	J813 1050-1	1			BRACE
7	J813 1162-3	1			BRACKET
8	J018 0120	AR			BOLT
9	J018 0122	AR			BOLT
10	J813 1047	2			BOLT
11	J012 0392	AR			WASHER
12	S018 0124	AR			BOLT
13	J813 1165	1			MOLDING ***
14	J813 1056-7				PLATE
15	J012 0382	AR			WASHER, Lock
16	J012 0380	AR			WASHER, Lock
17	J813 1047	AR			NUT
18	J012 0375	AR			NUT
19	S018 0177	AR			BOLT
20	S012 0384	AR			WASHER
21	S012 0378	AR			NUT
22	J012 0377	AR			NUT
23	J012 0394	AR			WASHER
24	J027 1506	AR			NUT
25	J027 1506	AR			WASHER, Lock
26	J813 1052	2			BRACKET
27	J012 0396	AR			WASHER
28	S018 0175	AR			BOLT
29	S018 0147	4			BOLT
30	J813 1033	AR			BOLT
31	J018 0153	AR			BOLT
32	S941 6532	AR			BOLT
33	J813 1011	1			GUIDE, Cable
34	J018 0122	AR			BOLT
35	J012 0382	AR			WASHER, Lock

MODEL CODES
16=Cherokee 2 Dr.(1981-83)
17=Cherokee 2 Dr.(1981-83)
73=Cherokee 2WD-2 Dr.(1984-86)
74=Cherokee 2WD-4 Dr.(1984-86)
18=Cherokee 4 Dr.(1981-83)
77=Cherokee 4WD-2 Dr.(1984-86)
78=Cherokee 4WD-4 Dr.(1984-86)
85=CJ-5 (1981-83)
86=CJ-6(1981)
87=CJ-7(1981-86)
88=CJ-8, Scrambler(1981-86)
64=Comanche 2WD-6 Ft. Box(1986)
66=Comanche 2WD-7 Ft. Box(1986)
63=Comanche 4WD-6 Ft. Box(1986)
65=Comanche 4WD-7 Ft. Box(1986)
15=Grand Wagoneer 4 Dr.(1984-86)
25=J-10 Truck 7 Ft. Box(1981-84)
26=J10 Truck 8 Ft. Box(1981-86)
27=J-20 Truck 8 Ft. Box(1981-86)
15=Wagoneer 4 Dr.(1981-83)
75=Wagoneer 4WD-4 Dr.(1984-86)

BODY
CJ=CJ-5, CJ-6, CJ-7, CJ-8, Scrambler(1981-86)
MJ=Comanche Pickup(1986)

STYLES
SJ=Wagoneer(1981-83), Grand Wagoneer(1984-86), Cherokee(1981-83), J-10, J-20(1981-86)
XJ=Wagoneer(1984-86), Cherokee(1984-86)

AR = Use as Required - = Non Illustrated Part P.A.R. = Paint as Required

« RETURN TO GROUP INDEX »

WINCH MOUNTING RAMSEY 2000 0R 2001 SJ CHEROKEE, SJ WAGONEER, J10, J20
Figure 13-5200

81J13 5200

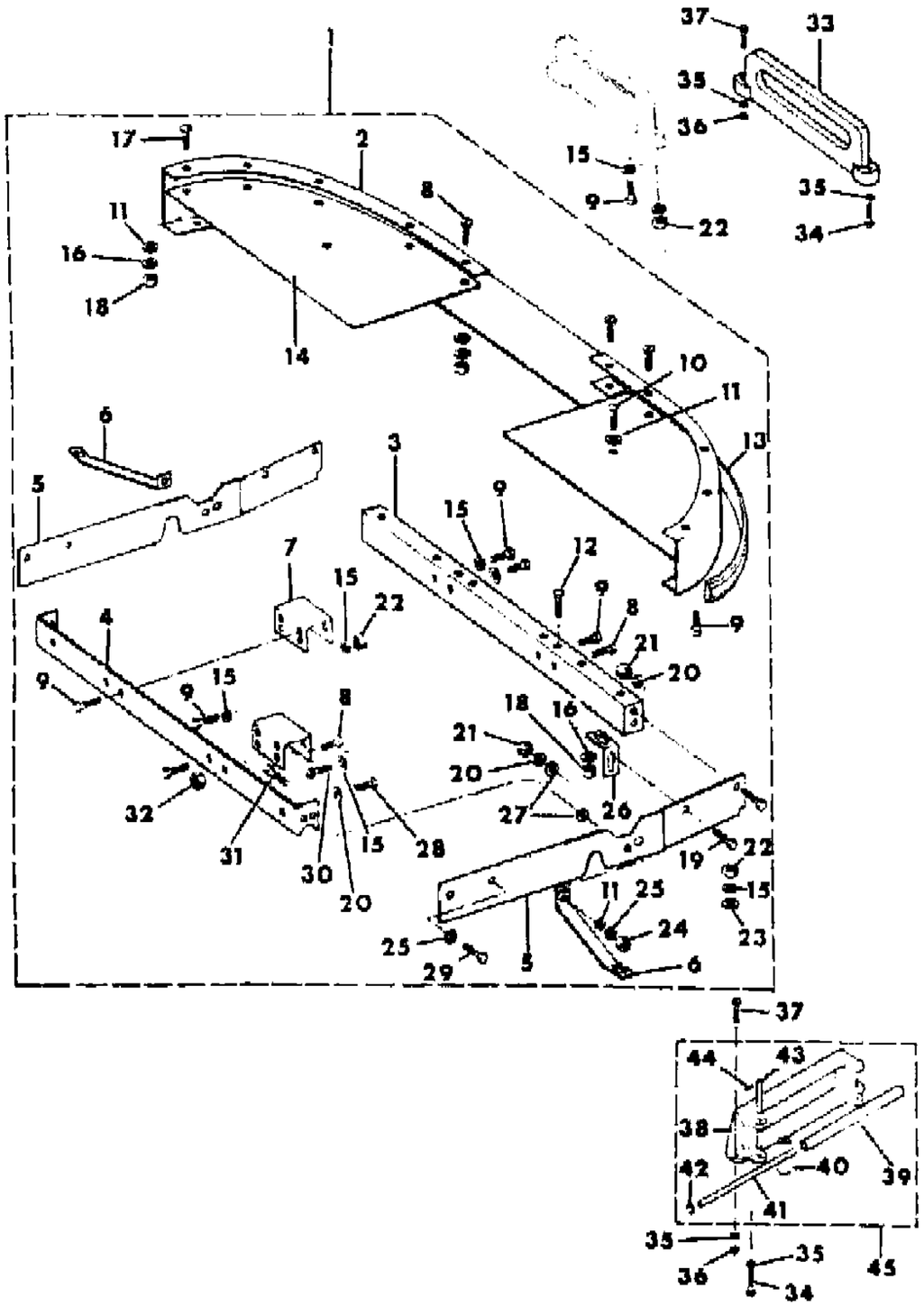

ITEM	PART NUMBER	QTY	BODY	MODEL	DESCRIPTION
36	J012 0377	AR			NUT
37	S018 0124	AR			BOLT
38	J813 1012	1			FRAME
39	J813 1015	2			ROLLER
40	J813 1016	2			ROLLER
41	J813 1013	2			ROLLER
42	J813 1021	4			NUT
43	J813 1014	2			PIN
44	J813 1017	4			PIN
45	J813 1177	1			GUIDE, Cable

MODEL CODES

16=Cherokee 2 Dr.(1981-83)
17=Cherokee 2 Dr.(1981-83)
73=Cherokee 2WD-2 Dr.(1984-86)
74=Cherokee 2WD-4 Dr.(1984-86)
18=Cherokee 4 Dr.(1981-83)
77=Cherokee 4WD-2 Dr.(1984-86)
78=Cherokee 4WD-4 Dr.(1984-86)
85=CJ-5 (1981-83)
86=CJ-6(1981)
87=CJ-7(1981-86)
88=CJ-8, Scrambler(1981-86)
64=Comanche 2WD-6 Ft. Box(1986)
66=Comanche 2WD-7 Ft. Box(1986)
63=Comanche 4WD-6 Ft. Box(1986)
65=Comanche 4WD-7 Ft. Box(1986)
15=Grand Wagoneer 4 Dr.(1984-86)
25=J-10 Truck 7 Ft. Box(1981-84)
26=J10 Truck 8 Ft. Box(1981-86)
27=J-20 Truck 8 Ft. Box(1981-86)
15=Wagoneer 4 Dr.(1981-83)
75=Wagoneer 4WD-4 Dr.(1984-86)

BODY
CJ=CJ-5, CJ-6, CJ-7, CJ-8, Scrambler(1981-86)
MJ=Comanche Pickup(1986)

STYLES
SJ=Wagoneer(1981-83), Grand Wagoneer(1984-86), Cherokee(1981-83), J-10, J-20(1981-86)
XJ=Wagoneer(1984-86), Cherokee(1984-86)

AR = Use as Required - = Non Illustrated Part P.A.R. = Paint as Required

« RETURN TO GROUP INDEX

WINCH MOUNTING RAMSEY 7901 (HIDDEN WINCH) SJ CHEROKEE, SJ WAGONEER, J10, J20
Figure 13-5300

81J13 5300

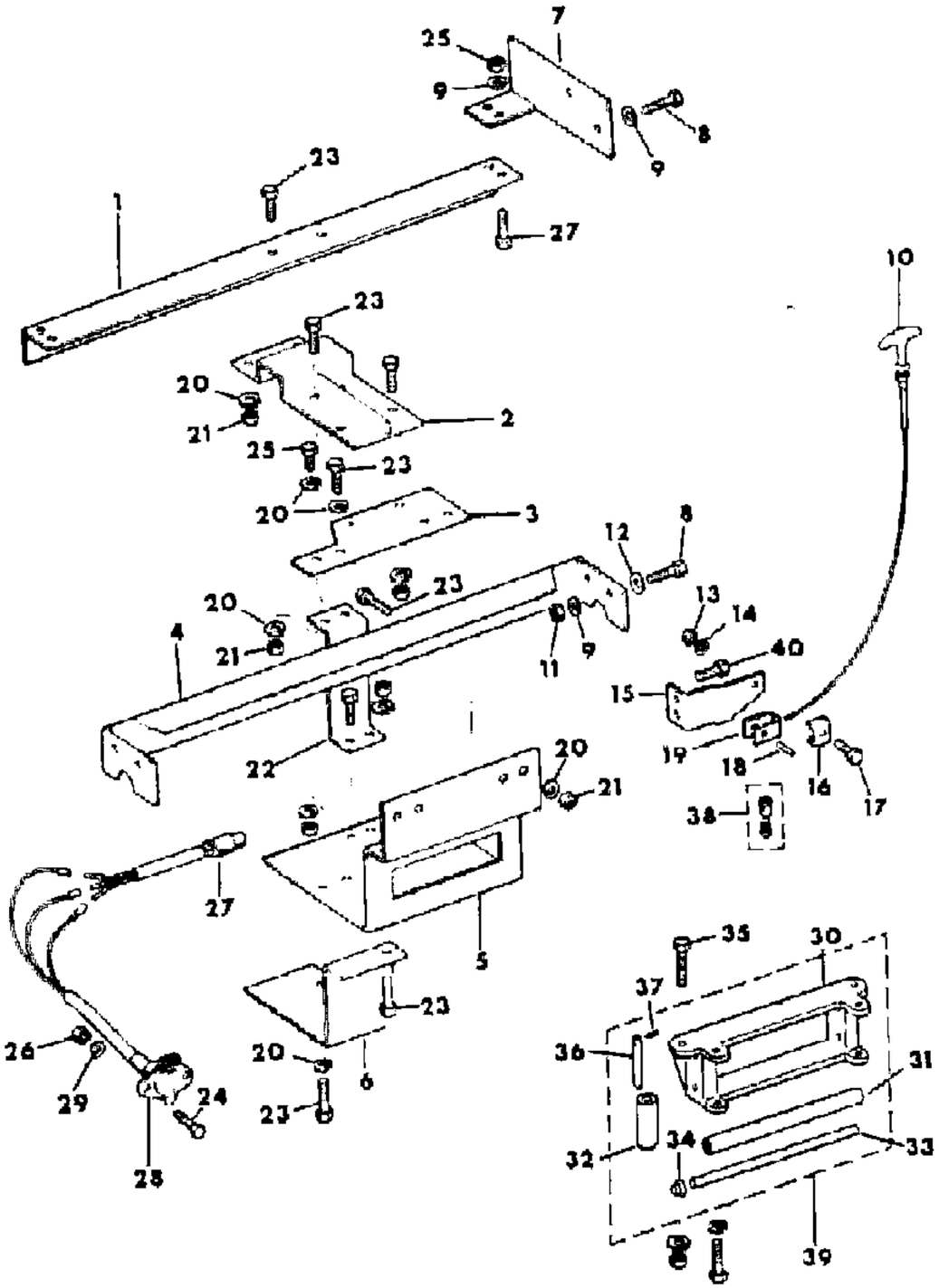

ITEM	PART NUMBER	QTY	BODY	MODEL	DESCRIPTION
1	J813 1208	1			BAR
2	J813 1201	1			BRACKET
3	J813 1211	1			PLATE
4	J813 1209	1			BAR
5	J813 1212	1			BRACKET
6	J813 1214	1			BRACKET
7	J813 1302-3	1			BRACKET
8	S018 0147	AR			BOLT
9	J012 0383	AR			WASHER, Lock
10	J813 1216	1			CABLE
11	J027 6506	4			NUT
12	J012 0395	4			WASHER
13	J012 0375	2			NUT
14	J012 0380	2			WASHER
15	J813 1213	2			BRACKET
16	J813 1217	2			CLIP
17	S018 0022	2			BOLT
18	J813 1218	2			PIN
19	J813 1215	1			BRACKET
20	J012 0382	AR			WASHER, Lock
21	J012 0377	AR			NUT
22	J813 1210	1			BRACKET
23	J018 0122	AR			BOLT
24	J012 0910	2			BOLT
25	J018 0120	AR			BOLT
26	J012 0361	AR			NUT
27	J813 1205	1			CONNECTOR
28	J813 1204	1			CONNECTOR
29	S012 0217	2			WASHER
30	J813 1221	1			FRAME
31	J813 1223	2			ROLLER
32	J813 1016	2			ROLLER
33	J813 1222	2			PIN
34	J813 1021	4			NUT
35	S018 0124	2			BOLT
36	J813 1014	2			PIN
37	J813 1017	2			PIN
38	J813 1207	1			SWIVEL ***
39	J813 1206	1			GUIDE, Cable

MODEL CODES

16=Cherokee 2 Dr.(1981-83)
17=Cherokee 2 Dr.(1981-83)
73=Cherokee 2WD-2 Dr.(1984-86)
74=Cherokee 2WD-4 Dr.(1984-86)
18=Cherokee 4 Dr.(1981-83)
77=Cherokee 4WD-2 Dr.(1984-86)
78=Cherokee 4WD-4 Dr.(1984-86)
85=CJ-5 (1981-83)
86=CJ-6(1981)
87=CJ-7(1981-86)
88=CJ-8, Scrambler(1981-86)
64=Comanche 2WD-6 Ft. Box(1986)
66=Comanche 2WD-7 Ft. Box(1986)
63=Comanche 4WD-6 Ft. Box(1986)
65=Comanche 4WD-7 Ft. Box(1986)
15=Grand Wagoneer 4 Dr.(1984-86)
25=J-10 Truck 7 Ft. Box(1981-84)
26=J10 Truck 8 Ft. Box(1981-86)
27=J-20 Truck 8 Ft. Box(1981-86)
15=Wagoneer 4 Dr.(1981-83)
75=Wagoneer 4WD-4 Dr.(1984-86)

BODY
CJ=CJ-5, CJ-6, CJ-7, CJ-8, Scrambler(1981-86)
MJ=Comanche Pickup(1986)

STYLES
SJ=Wagoneer(1981-83), Grand Wagoneer(1984-86), Cherokee(1981-83), J-10, J-20(1981-86)
XJ=Wagoneer(1984-86), Cherokee(1984-86)

AR = Use as Required - = Non Illustrated Part P.A.R. = Paint as Required

« RETURN TO GROUP INDEX »

WINCH MOUNTING RAMSEY 7901 (HIDDEN WINCH) SJ CHEROKEE, SJ WAGONEER, J10, J20
Figure 13-5300

81J13 5300

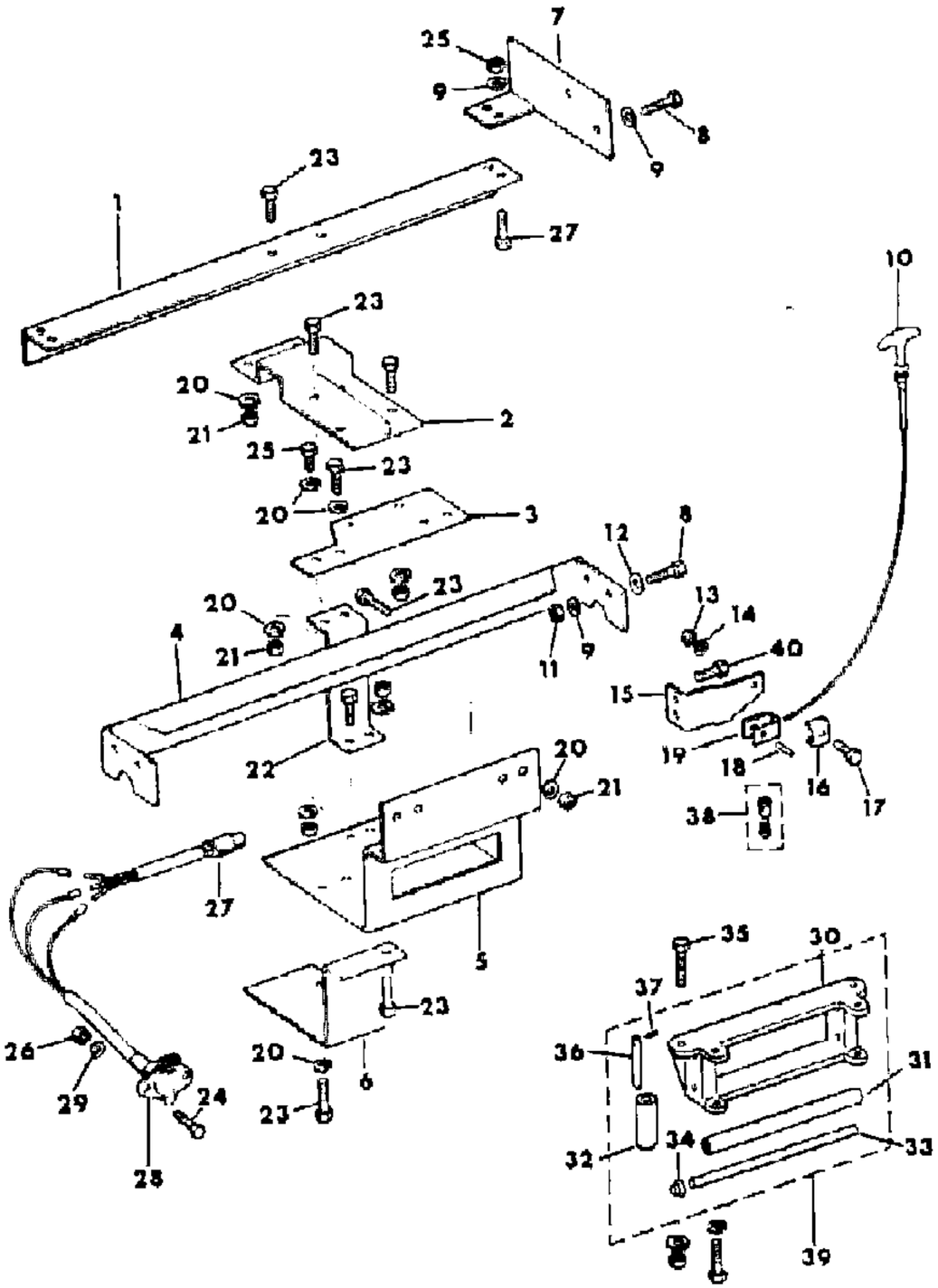

ITEM	PART NUMBER	QTY	BODY	MODEL	DESCRIPTION
40	S017 2431	AR			SCREW

MODEL CODES
16=Cherokee 2 Dr.(1981-83)
17=Cherokee 2 Dr.(1981-83)
73=Cherokee 2WD-2 Dr.(1984-86)
74=Cherokee 2WD-4 Dr.(1984-86)
18=Cherokee 4 Dr.(1981-83)
77=Cherokee 4WD-2 Dr.(1984-86)
78=Cherokee 4WD-4 Dr.(1984-86)
85=CJ-5 (1981-83)
86=CJ-6(1981)
87=CJ-7(1981-86)
88=CJ-8, Scrambler(1981-86)
64=Comanche 2WD-6 Ft. Box(1986)
66=Comanche 2WD-7 Ft. Box(1986)
63=Comanche 4WD-6 Ft. Box(1986)
65=Comanche 4WD-7 Ft. Box(1986)
15=Grand Wagoneer 4 Dr.(1984-86)
25=J-10 Truck 7 Ft. Box(1981-84)
26=J10 Truck 8 Ft. Box(1981-86)
27=J-20 Truck 8 Ft. Box(1981-86)
15=Wagoneer 4 Dr.(1981-83)
75=Wagoneer 4WD-4 Dr.(1984-86)

BODY
CJ=CJ-5, CJ-6, CJ-7, CJ-8, Scrambler(1981-86)
MJ=Comanche Pickup(1986)

STYLES
SJ=Wagoneer(1981-83), Grand Wagoneer(1984-86), Cherokee(1981-83), J-10, J-20(1981-86)
XJ=Wagoneer(1984-86), Cherokee(1984-86)

AR = Use as Required - = Non Illustrated Part P.A.R. = Paint as Required

« RETURN TO GROUP INDEX

WINCH, MOTOR AND DRUM RAMSEY 7901 (HIDDEN WINCH) SJ CHEROKEE, SJ WAGONEER, J10, J20
Figure 13-5400

81J13 5400

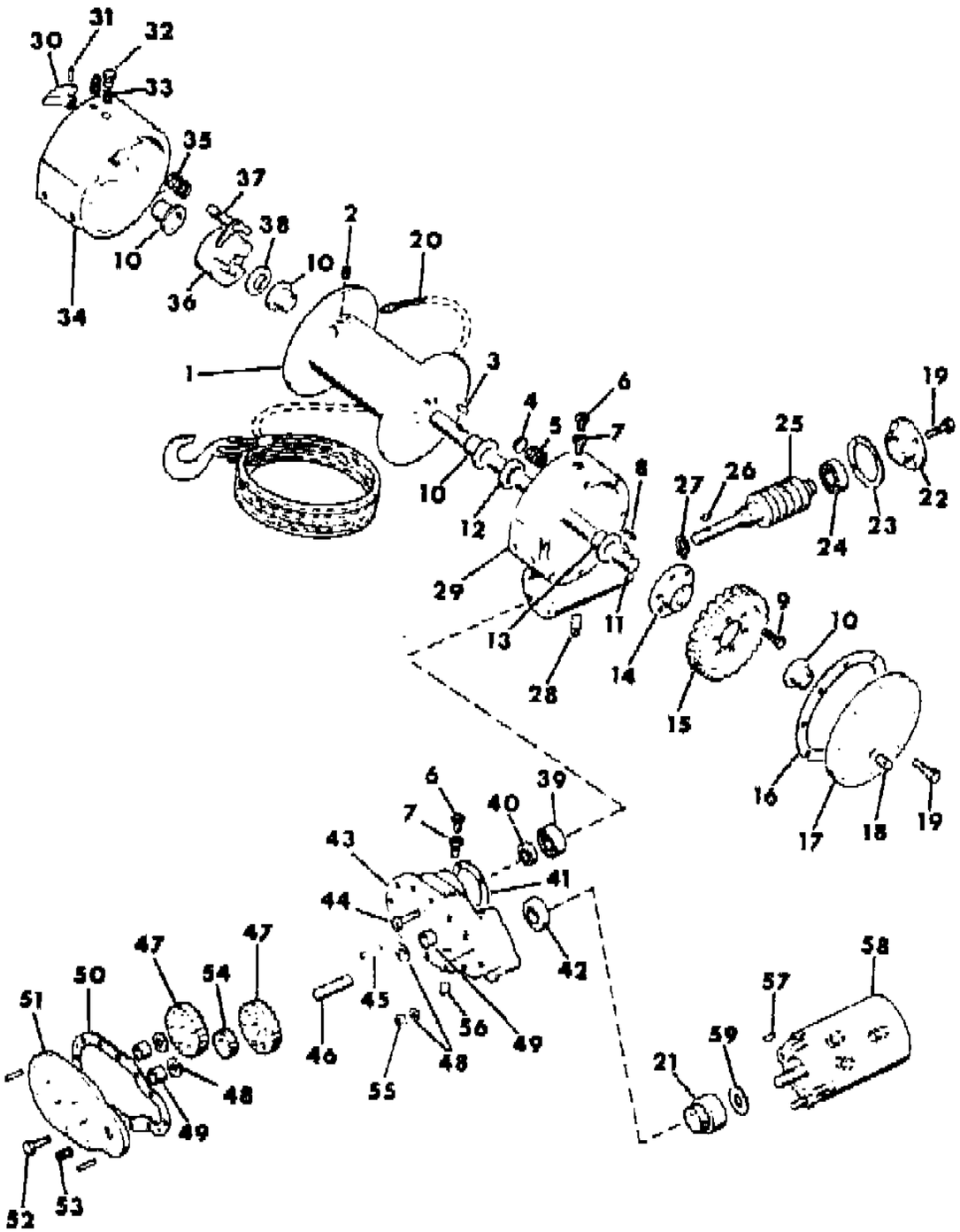

ITEM	PART NUMBER	QTY	BODY	MODEL	DESCRIPTION
1	J813 1175	1			DRUM, Cable ***
2	J205 1019	1			PLUG
3	J813 1091	1			SCREEN
4	J205 1100	1			CAP
5	J205 1102	1			SPRING
6	J205 1247	2			PLUG
7	J019 9923	2			SCREW
8	J205 1097	1			KEY, Shaft
9	J018 0077	6			BOLT
10	J813 1195	4			BUSHING
11	J813 1176	1			SHAFT
12	J813 1010	1			SEAL
13	J813 1194	1			BUSHING
14	J205 1048	1			HUB ***
15	J205 1056	1			GEAR ***
16	J205 1067	1			GASKET
17	J813 1186	1			COVER
18	J010 3867	1			PLUG
19	J018 0020	AR			BOLT
20	J813 1220	1			CABLE, Tow
21	J812 9999	1			GEAR ***
22	J813 1184	1			CAP
23	J205 1104	1			GASKET
24	J205 1099	1			BEARING
25	J813 1192	1			GEAR ***
26	J813 1197	1			KEY, Shaft
27	J206 2126	1			RING, Snap
28	J010 3867	1			PLUG
29	J813 1000	1			HOUSING
30	J813 1188	1			HANDLE
31	J813 1198	1			PIN
32	J813 1199	1			PLUG
33	J813 1196	1			SCREW, Package
34	J813 1190	1			HOUSING
35	J813 1200	1			SPRING
36	J813 1185	1			CLUTCH ***
37	J813 1183	1			SHIFTER ***
38	J813 1189	1			SPACER
39	J205 1099	1			BEARING

MODEL CODES

16=Cherokee 2 Dr.(1981-83)
17=Cherokee 2 Dr.(1981-83)
73=Cherokee 2WD-2 Dr.(1984-86)
74=Cherokee 2WD-4 Dr.(1984-86)
18=Cherokee 4 Dr.(1981-83)
77=Cherokee 4WD-2 Dr.(1984-86)
78=Cherokee 4WD-4 Dr.(1984-86)
85=CJ-5 (1981-83)
86=CJ-6(1981)
87=CJ-7(1981-86)
88=CJ-8, Scrambler(1981-86)
64=Comanche 2WD-6 Ft. Box(1986)
66=Comanche 2WD-7 Ft. Box(1986)
63=Comanche 4WD-6 Ft. Box(1986)
65=Comanche 4WD-7 Ft. Box(1986)
15=Grand Wagoneer 4 Dr.(1984-86)
25=J-10 Truck 7 Ft. Box(1981-84)
26=J10 Truck 8 Ft. Box(1981-86)
27=J-20 Truck 8 Ft. Box(1981-86)
15=Wagoneer 4 Dr.(1981-83)
75=Wagoneer 4WD-4 Dr.(1984-86)

BODY
CJ=CJ-5, CJ-6, CJ-7, CJ-8, Scrambler(1981-86)
MJ=Comanche Pickup(1986)

STYLES
SJ=Wagoneer(1981-83), Grand Wagoneer(1984-86), Cherokee(1981-83), J-10, J-20(1981-86)
XJ=Wagoneer(1984-86), Cherokee(1984-86)

AR = Use as Required - = Non Illustrated Part P.A.R. = Paint as Required

« RETURN TO GROUP INDEX »

WINCH, MOTOR AND DRUM RAMSEY 7901 (HIDDEN WINCH) SJ CHEROKEE, SJ WAGONEER, J10, J20
Figure 13-5400

81J13 5400

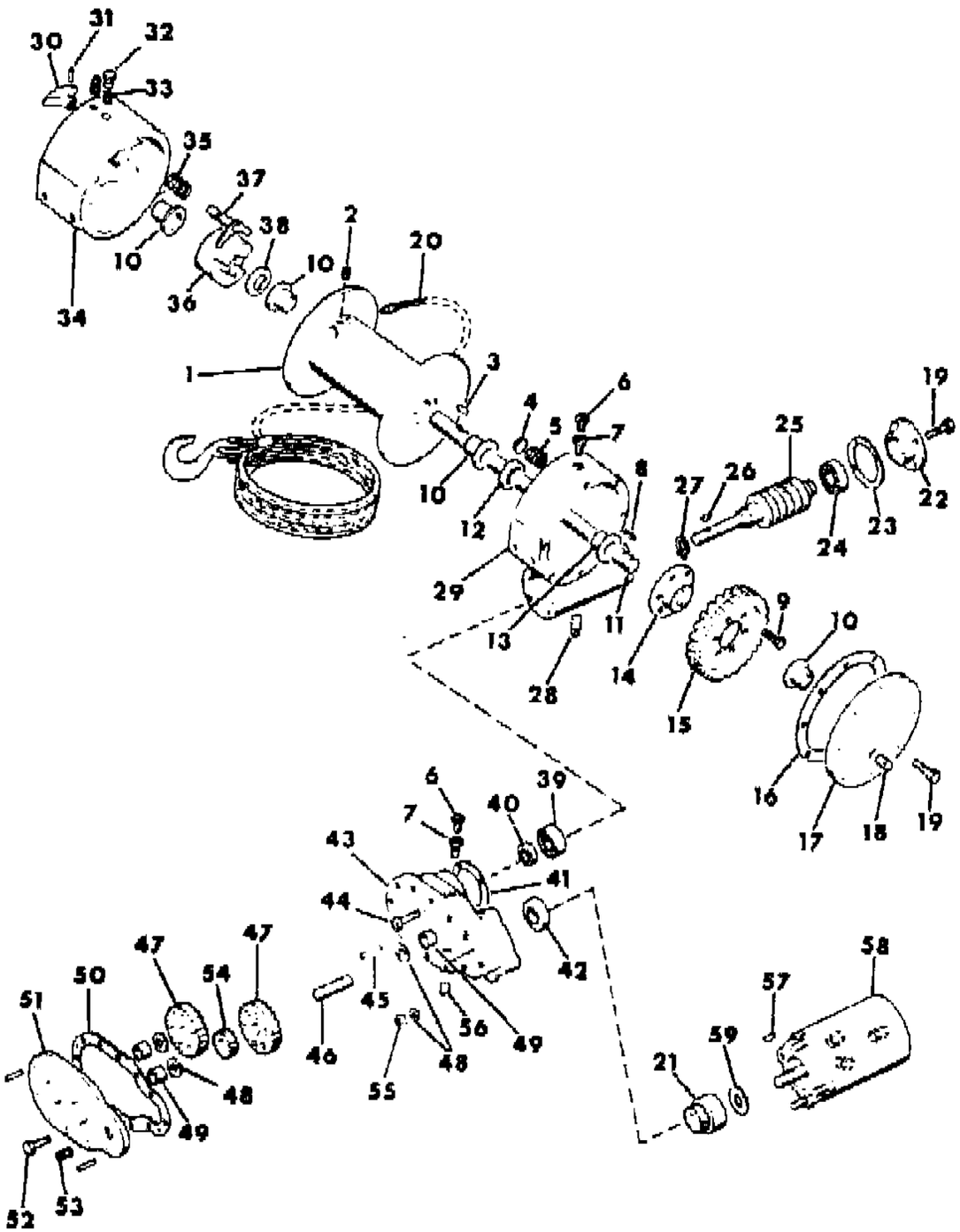

ITEM	PART NUMBER	QTY	BODY	MODEL	DESCRIPTION
40	J205 1103	1			SEAL
41	J205 1004	1			GASKET
42	J813 1008	1			SEAL
43	J813 1001	1			HOUSING
44	J813 1069	AR			BOLT
45	J206 2136	1			KEY, Shaft
46	J206 2111	1			SHAFT
47	J206 2114	2			GEAR ***
48	J205 7017	AR			WASHER
49	J813 1193	2			BUSHING
50	J206 2119	1			GASKET
51	J813 1187	1			COVER
52	S018 0018	AR			BOLT
53	J205 1322	1			PLUG
54	J206 2112	1			GEAR ***
55	J012 0369	AR			NUT
56	J010 3867	1			SCREW
57	J813 1003	1			KEY
58	J206 2124	1			MOTOR
59	J813 1007	1			RING

MODEL CODES

16=Cherokee 2 Dr.(1981-83)
17=Cherokee 2 Dr.(1981-83)
73=Cherokee 2WD-2 Dr.(1984-86)
74=Cherokee 2WD-4 Dr.(1984-86)
18=Cherokee 4 Dr.(1981-83)
77=Cherokee 4WD-2 Dr.(1984-86)
78=Cherokee 4WD-4 Dr.(1984-86)
85=CJ-5 (1981-83)
86=CJ-6(1981)
87=CJ-7(1981-86)
88=CJ-8, Scrambler(1981-86)
64=Comanche 2WD-6 Ft. Box(1986)
66=Comanche 2WD-7 Ft. Box(1986)
63=Comanche 4WD-6 Ft. Box(1986)
65=Comanche 4WD-7 Ft. Box(1986)
15=Grand Wagoneer 4 Dr.(1984-86)
25=J-10 Truck 7 Ft. Box(1981-84)
26=J10 Truck 8 Ft. Box(1981-86)
27=J-20 Truck 8 Ft. Box(1981-86)
15=Wagoneer 4 Dr.(1981-83)
75=Wagoneer 4WD-4 Dr.(1984-86)

BODY
CJ=CJ-5, CJ-6, CJ-7, CJ-8, Scrambler(1981-86)
MJ=Comanche Pickup(1986)

STYLES
SJ=Wagoneer(1981-83), Grand Wagoneer(1984-86), Cherokee(1981-83), J-10, J-20(1981-86)
XJ=Wagoneer(1984-86), Cherokee(1984-86)

AR = Use as Required - = Non Illustrated Part P.A.R. = Paint as Required

« RETURN TO GROUP INDEX

WINCH MOUNTING RAMSEY REP 6000 SJ CHEROKEE, SJ WAGONEER, J10, J20
Figure 13-5500

81J13 5500

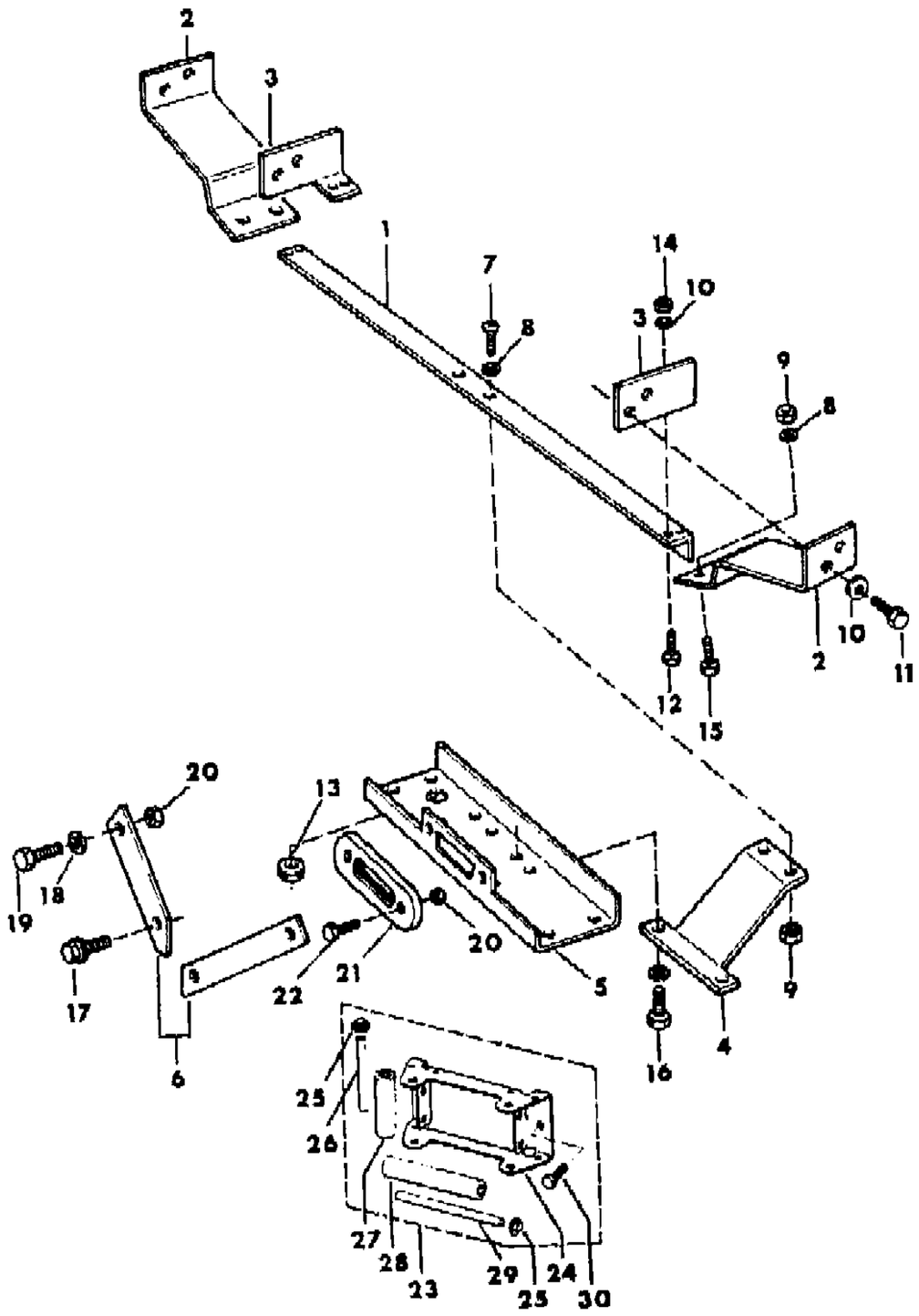

ITEM	PART NUMBER	QTY	BODY	MODEL	DESCRIPTION
1	8351 0157	1			BRACKET
2	8351 0160-1	1			BRACKET
3	8351 0158-9	2			BRACKET
4	8351 0162	1			BRACKET
5	8351 0163	1			BRACKET
6	8351 0164-5	1			BRACE
7	8351 0168	2			BOLT
8	J012 0382	AR			WASHER, Lock
9	J012 0377	AR			WASHER, Lock
10	J012 0383	AR			WASHER, Lock
11	S018 0147	AR			BOLT
12	8351 0177	4			BOLT
13	8351 0169	1			GROMMET
14	J027 1506	4			NUT
15	8351 0166	4			BOLT
16	8351 0176	2			BOLT
17	8351 0167	1			BOLT
18	S012 0384	2			WASHER
19	8351 0178	2			BOLT
20	S012 0378	AR			NUT
21	8351 0146	1			GUIDE, Cable
22	8351 0147	2			BOLT
23	8351 0142	1			GUIDE, Cable
24	8351 0144	1			FRAME
25	J813 1021	AR			NUT
26	J813 1484	2			ROLLER
27	J813 1482	2			ROLLER
28	J813 1015	2			ROLLER
29	8351 0143	2			ROLLER
30	8351 0145	AR			BOLT

MODEL CODES

16=Cherokee 2 Dr.(1981-83)
17=Cherokee 2 Dr.(1981-83)
73=Cherokee 2WD-2 Dr.(1984-86)
74=Cherokee 2WD-4 Dr.(1984-86)
18=Cherokee 4 Dr.(1981-83)
77=Cherokee 4WD-2 Dr.(1984-86)
78=Cherokee 4WD-4 Dr.(1984-86)
85=CJ-5 (1981-83)
86=CJ-6(1981)
87=CJ-7(1981-86)
88=CJ-8, Scrambler(1981-86)
64=Comanche 2WD-6 Ft. Box(1986)
66=Comanche 2WD-7 Ft. Box(1986)
63=Comanche 4WD-6 Ft. Box(1986)
65=Comanche 4WD-7 Ft. Box(1986)
15=Grand Wagoneer 4 Dr.(1984-86)
25=J-10 Truck 7 Ft. Box(1981-84)
26=J10 Truck 8 Ft. Box(1981-86)
27=J-20 Truck 8 Ft. Box(1981-86)
15=Wagoneer 4 Dr.(1981-83)
75=Wagoneer 4WD-4 Dr.(1984-86)

BODY
CJ=CJ-5, CJ-6, CJ-7, CJ-8, Scrambler(1981-86)
MJ=Comanche Pickup(1986)

STYLES
SJ=Wagoneer(1981-83), Grand Wagoneer(1984-86), Cherokee(1981-83), J-10, J-20(1981-86)
XJ=Wagoneer(1984-86), Cherokee(1984-86)

AR = Use as Required - = Non Illustrated Part P.A.R. = Paint as Required

« RETURN TO GROUP INDEX

WINCH MOUNTING WARN 8274 OR 9854 SJ CHEROKEE, SJ WAGONEER, J10, J20
Figure 13-5600

81J13 5600

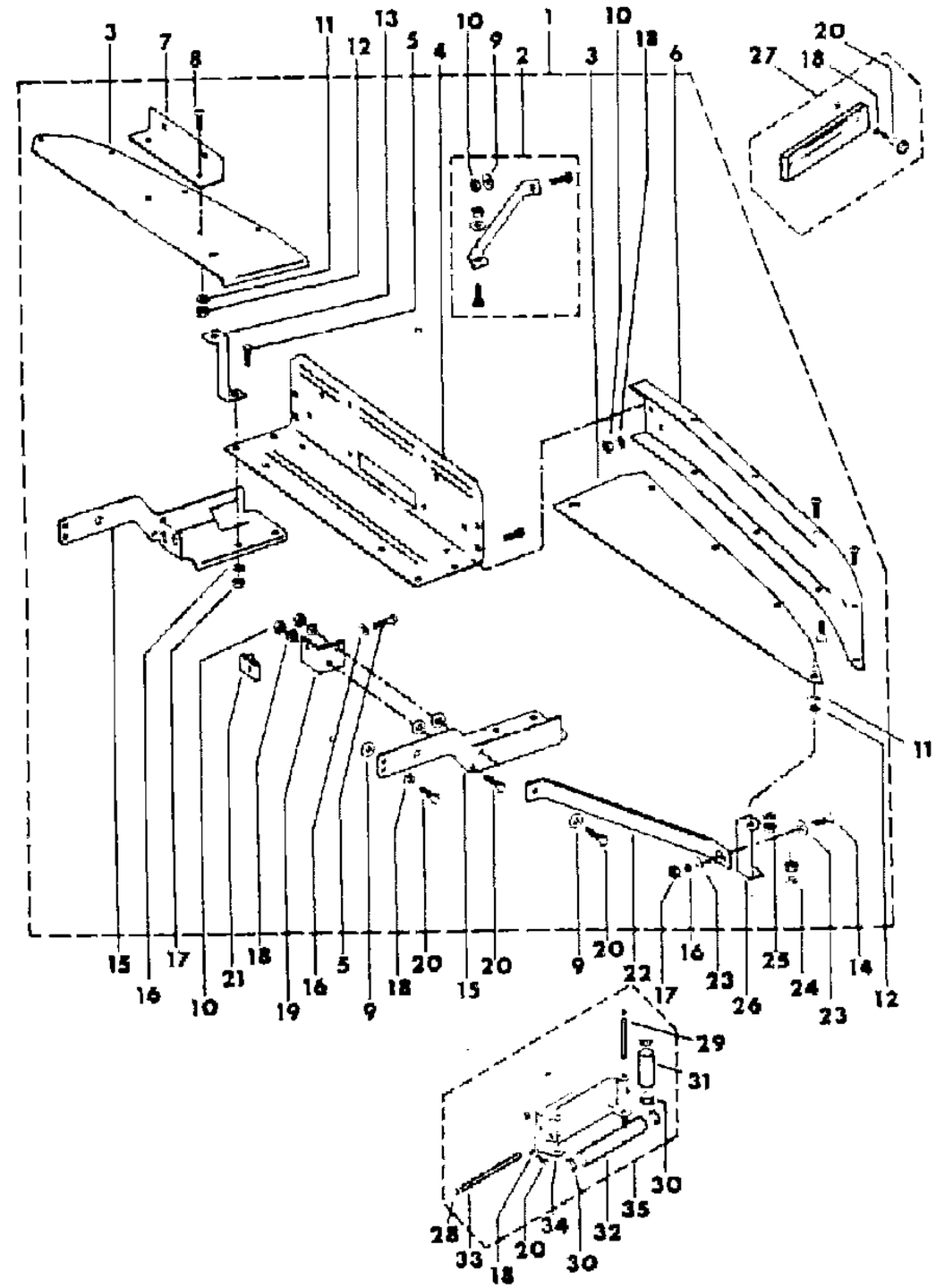

ITEM	PART NUMBER	QTY	BODY	MODEL	DESCRIPTION
1	J206 7121	1			MOUNTING PACKAGE, Winch ***
2	J813 1075	1			BRACE
3					PLATE
	J812 9972	1			Right
	J813 1156	1			Left
4	J812 9962	1			BRACKET
5	S018 0175	AR			BOLT
6	J812 9968	2			RAIL, Bumper
7	J812 9975	1			BRACKET
8	S012 1887	AR			BOLT
9	J012 0395	AR			WASHER
10	J027 1506	AR			NUT
11	J012 0380	AR			WASHER
12	J012 0375	AR			NUT
13	J812 9973	2			BRACKET
14	S018 0147	AR			BOLT
15					BRACKET
	J813 1158	1			Right
	J813 1157	1			Left
16	S012 0384	AR			WASHER
17	J012 0387	AR			NUT
18	J012 0383	AR			WASHER, Lock
19					BRACKET
	J813 1155	1			Right
	J813 1154	1			Left
20	S018 0149	AR			BOLT
21	J813 1032	2			BRACKET
22	J812 9971	2			BRACE
23	J012 0396	AR			WASHER
24	J012 0214	AR			WASHER, Lock
25	J012 0376	AR			NUT
26	J812 9974	2			BRACKET
27	J812 3751	1			GUIDE, Cable
28	J812 9993	AR			RING
29	J812 9992	2			SHAFT
30	J812 9995	4			BUSHING
31	J812 9997	2			ROLLER
32	J812 9996	2			ROLLER
33	J812 9994	2			SHAFT

MODEL CODES

16=Cherokee 2 Dr.(1981-83)
17=Cherokee 2 Dr.(1981-83)
73=Cherokee 2WD-2 Dr.(1984-86)
74=Cherokee 2WD-4 Dr.(1984-86)
18=Cherokee 4 Dr.(1981-83)
77=Cherokee 4WD-2 Dr.(1984-86)
78=Cherokee 4WD-4 Dr.(1984-86)
85=CJ-5 (1981-83)
86=CJ-6(1981)
87=CJ-7(1981-86)
88=CJ-8, Scrambler(1981-86)
64=Comanche 2WD-6 Ft. Box(1986)
66=Comanche 2WD-7 Ft. Box(1986)
63=Comanche 4WD-6 Ft. Box(1986)
65=Comanche 4WD-7 Ft. Box(1986)
15=Grand Wagoneer 4 Dr.(1984-86)
25=J-10 Truck 7 Ft. Box(1981-84)
26=J10 Truck 8 Ft. Box(1981-86)
27=J-20 Truck 8 Ft. Box(1981-86)
15=Wagoneer 4 Dr.(1981-83)
75=Wagoneer 4WD-4 Dr.(1984-86)

BODY
CJ=CJ-5, CJ-6, CJ-7, CJ-8, Scrambler(1981-86)
MJ=Comanche Pickup(1986)

STYLES
SJ=Wagoneer(1981-83), Grand Wagoneer(1984-86), Cherokee(1981-83), J-10, J-20(1981-86)
XJ=Wagoneer(1984-86), Cherokee(1984-86)

AR = Use as Required - = Non Illustrated Part P.A.R. = Paint as Required

WINCH MOUNTING WARN 8274 OR 9854 SJ CHEROKEE, SJ WAGONEER, J10, J20
Figure 13-5600

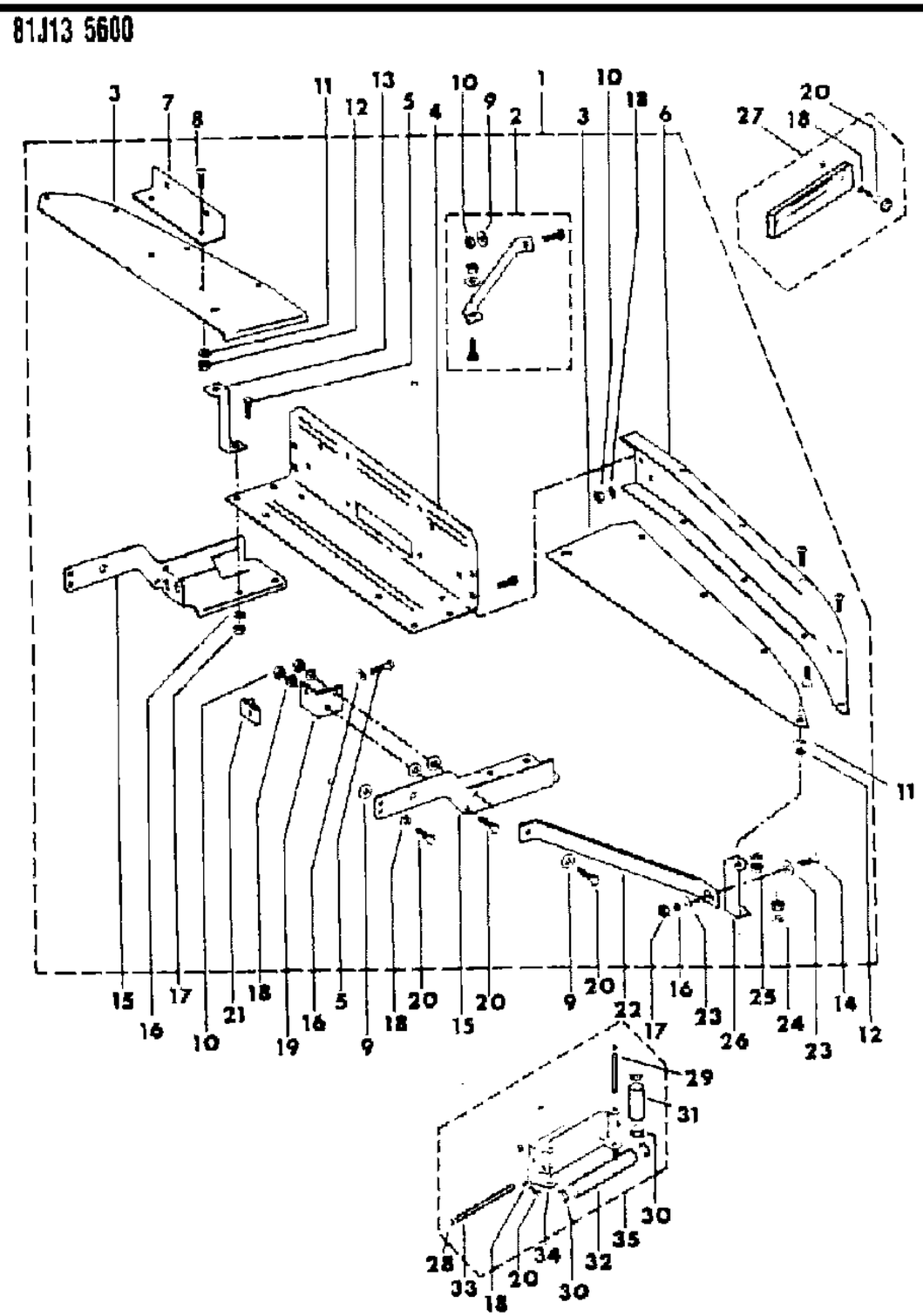

ITEM	PART NUMBER	QTY	BODY	MODEL	DESCRIPTION
34	J812 9991	1			FRAME
35	J206 7311	1			GUIDE, Cable

MODEL CODES
16=Cherokee 2 Dr.(1981-83)
17=Cherokee 2 Dr.(1981-83)
73=Cherokee 2WD-2 Dr.(1984-86)
74=Cherokee 2WD-4 Dr.(1984-86)
18=Cherokee 4 Dr.(1981-83)
77=Cherokee 4WD-2 Dr.(1984-86)
78=Cherokee 4WD-4 Dr.(1984-86)
85=CJ-5 (1981-83)
86=CJ-6(1981)
87=CJ-7(1981-86)
88=CJ-8, Scrambler(1981-86)
64=Comanche 2WD-6 Ft. Box(1986)
66=Comanche 2WD-7 Ft. Box(1986)
63=Comanche 4WD-6 Ft. Box(1986)
65=Comanche 4WD-7 Ft. Box(1986)
15=Grand Wagoneer 4 Dr.(1984-86)
25=J-10 Truck 7 Ft. Box(1981-84)
26=J10 Truck 8 Ft. Box(1981-86)
27=J-20 Truck 8 Ft. Box(1981-86)
15=Wagoneer 4 Dr.(1981-83)
75=Wagoneer 4WD-4 Dr.(1984-86)

BODY
CJ=CJ-5, CJ-6, CJ-7, CJ-8, Scrambler(1981-86)
MJ=Comanche Pickup(1986)

STYLES
SJ=Wagoneer(1981-83), Grand Wagoneer(1984-86), Cherokee(1981-83), J-10, J-20(1981-86)
XJ=Wagoneer(1984-86), Cherokee(1984-86)

AR = Use as Required - = Non Illustrated Part P.A.R. = Paint as Required

« RETURN TO GROUP INDEX

SNOW PLOW MOLDBOARD AND MOUNTING SJ CHEROKEE, SJ WAGONEER, J10, J20
Figure 13-5700

81J13 5700

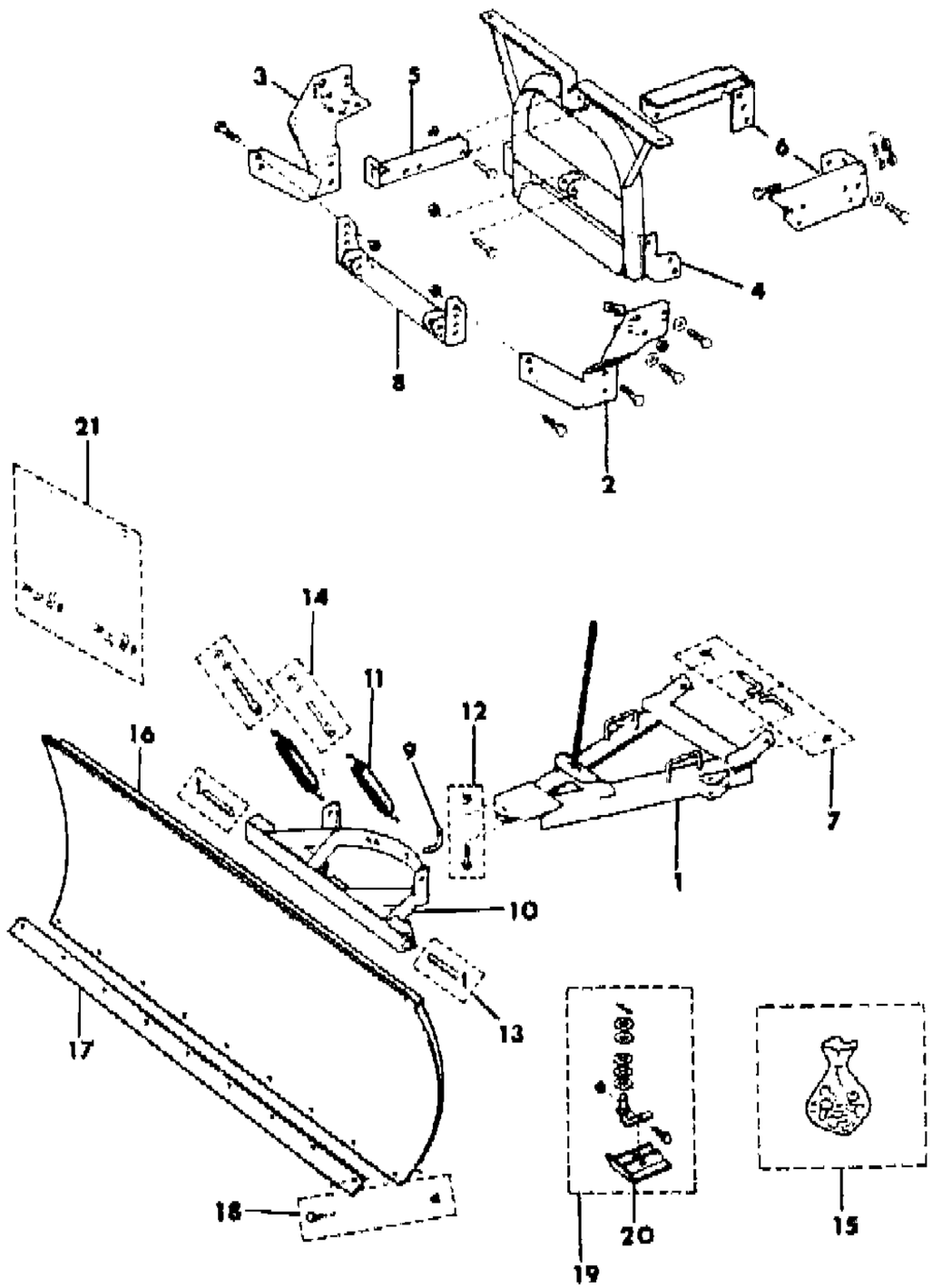

ITEM	PART NUMBER	QTY	BODY	MODEL	DESCRIPTION
1					A-FRAME, Snow Plow
	J201 3568	1			Standard Duty
	J201 3569	1			Heavy Duty - J20
2	J201 0429	1			BRACKET, Side
3	J201 0430	1			BRACKET, Side
4	J201 0480	1			FRAME, Snow Plow Lift
5	J201 0514	1			ARM, Lift
6					BRACKET, Front
	J200 8466	1			Right
	J200 8465	1			Left
7	J999 4888	2			PIN PACKAGE, With Clip
8	J201 0431	1			FRAME, Snow Plow Clevis
9	J201 3003	1			PIN, Shear
10					SECTOR, Snow Plow ***
	J201 2326	1			Standard Duty
	J201 2793	1			Heavy Duty - J20
11	J200 7017	2			SPRING, Snow Plow Trip
12	J200 9122	1			BOLT
13	J200 9119	2			PIN PACKAGE, With Cotter Pin
14	J200 9124	2			BOLT, Eye
15	J200 8461	1			HARDWARE PACKAGE
16					MOLDBOARD ASSEMBLY ***
	J200 9159	1			84 Inch
	J200 9163	1			90 Inch
	J200 9286	1			96 Inch
17					BLADE, Moldboard
	J200 9132	1			84 Inch
	J200 9796	1			90 Inch
	J200 9133	1			96 Inch
18	J200 8184	1			BOLT PACKAGE ***
19	J200 9126	2			SHOE PACKAGE ***
20	J200 7006	2			SHOE, Moldboard Spindle ***
21	J200 9916	1			INDICATOR PACKAGE, Snow Plow Marker ***

MODEL CODES

16=Cherokee 2 Dr.(1981-83)
17=Cherokee 2 Dr.(1981-83)
73=Cherokee 2WD-2 Dr.(1984-86)
74=Cherokee 2WD-4 Dr.(1984-86)
18=Cherokee 4 Dr.(1981-83)
77=Cherokee 4WD-2 Dr.(1984-86)
78=Cherokee 4WD-4 Dr.(1984-86)
85=CJ-5 (1981-83)
86=CJ-6(1981)
87=CJ-7(1981-86)
88=CJ-8, Scrambler(1981-86)
64=Comanche 2WD-6 Ft. Box(1986)
66=Comanche 2WD-7 Ft. Box(1986)
63=Comanche 4WD-6 Ft. Box(1986)
65=Comanche 4WD-7 Ft. Box(1986)
15=Grand Wagoneer 4 Dr.(1984-86)
25=J-10 Truck 7 Ft. Box(1981-84)
26=J10 Truck 8 Ft. Box(1981-86)
27=J-20 Truck 8 Ft. Box(1981-86)
15=Wagoneer 4 Dr.(1981-83)
75=Wagoneer 4WD-4 Dr.(1984-86)

BODY
CJ=CJ-5, CJ-6, CJ-7, CJ-8, Scrambler(1981-86)
MJ=Comanche Pickup(1986)

STYLES
SJ=Wagoneer(1981-83), Grand Wagoneer(1984-86), Cherokee(1981-83), J-10, J-20(1981-86)
XJ=Wagoneer(1984-86), Cherokee(1984-86)

AR = Use as Required - = Non Illustrated Part P.A.R. = Paint as Required

« RETURN TO GROUP INDEX

ILLUSTRATION NOT AVAILABLE AT TIME OF PUBLICATION

GROUP 14 - FUEL

ILLUSTRATION TITLE	GROUP-FIG. NO.
AIR CLEANERS, CJ	
AIR CLEANER 1981-85 ISUZU DIESEL, EXPORT, LEFT HAND DRIVE CJ-5,6,7,8	Fig. 14-100
AIR CLEANER 1981-85 ISUZU DIESEL, EXPORT, RIGHT HAND DRIVE CJ-5,6,7,8	Fig. 14-200
AIR CLEANER 1986 RENAULT DIESEL, EXPORT CJ-7,8	Fig. 14-300
AIR CLEANER 1981-83 GM FOUR CYLINDER CJ-5,6,7,8, SCRAMBLER	Fig. 14-400
AIR CLEANER 1983-86 AMC FOUR CYLINDER CJ-5,7,8, SCRAMBLER	Fig. 14-500
AIR CLEANER SIX CYLINDER, WITHOUT POWER BRAKES CJ-5,6,7,8, SCRAMBLER	Fig. 14-600
AIR CLEANER SIX CYLINDER, WITH POWER BRAKES CJ-5,6,7,8, SCRAMBLER	Fig. 14-700
AIR CLEANER EIGHT CYLINDER CJ-5,6,7,8, SCRAMBLER	Fig. 14-800
CARBURETORS AND INJECTION, CJ	
CARBURETOR AND COMPONENT PARTS 1981-83 GM FOUR CYLINDER, US 49-STATES CJ-5,6,7,8, SCRAMBLER	Fig. 14-900
CARBURETOR AND COMPONENT PARTS 1981-83 GM FOUR CYLINDER, US-CALIFORNIA	Fig. 14-1000
CARBURETOR AND COMPONENT PARTS 1983-86 AMC FOUR CYLINDER CJ-5,7,8, SCRAMBLER	Fig. 14-1100
CARBURETOR AND COMPONENT PARTS 1981-86 SIX CYLINDER CJ-5,6,7,8, SCRAMBLER	Fig. 14-1200
CARBURETOR AND COMPONENT PARTS 1981 EIGHT CYLINDER CJ-5,6,7,8, SCRAMBLER	Fig. 14-1300
FUEL INJECTION SYSTEM 1981-85 ISUZU DIESEL, EXPORT CJ-5,6,7,8	Fig. 14-1400
NOZZLE, INJECTOR 1981-85 ISUZU DIESEL, EXPORT CJ-5,6,7,8	Fig. 14-1500
THROTTLE VALVE AND SHUTTER 1981-85 ISUZU DIESEL, EXPORT CJ-5,6,7,8	Fig. 14-1600
FUEL INJECTION SYSTEM 1986 RENAULT DIESEL, EXPORT CJ-7,8	Fig. 14-1700
ACCELERATOR PEDAL AND LINKAGE, CJ	
ACCELERATOR PEDAL AND LINKAGE 1981-85 ISUZU, 1986 RENAULT DIESEL, EXPORT CJ-5,6,7,8	Fig. 14-1800
ACCELERATOR PEDAL AND LINKAGE FOUR AND SIX CYLINDER CJ-5,6,7,8, SCRAMBLER	Fig. 14-1900
ACCELERATOR PEDAL AND LINKAGE EIGHT CYLINDER CJ-5,6,7,8, SCRAMBLER	Fig. 14-2000
LINKAGE, AUTOMATIC TRANSMISSION THROTTLE VALVE 1981-86 CJ-5,6,7,8, SCRAMBLER	Fig. 14-2100
SPEED CONTROL, CJ	
SPEED CONTROL, ENGINE COMPARTMENT COMPONENTS 1982-86 SIX CYLINDER CJ-5,7,8, SCRAMBLER	Fig. 14-2200
SPEED CONTROL, INSTRUMENT PANEL COMPONENTS 1982-86 SIX CYLINDER CJ-5,7,8, SCRAMBLER	Fig. 14-2300
FUEL PUMP AND FILTER, CJ	
PUMP ASSEMBLY, INJECTION 1981-85 ISUZU DIESEL, EXPORT CJ-5,6,7,8	Fig. 14-2400
PUMP, FUEL INJECTION FEED 1981-85 ISUZU DIESEL, EXPORT CJ-5,6,7,8	Fig. 14-2500
GOVERNOR, FUEL INJECTION 1981-85 ISUZU DIESEL, EXPORT CJ-5,6,7,8	Fig. 14-2600
TIMER, FUEL INJECTION 1981-85 ISUZU DIESEL, EXPORT CJ-5,6,7,8	Fig. 14-2700
PUMP ASSEMBLY, INJECTION 1986 RENAULT DIESEL, EXPORT CJ-7,8	Fig. 14-2800

ILLUSTRATION TITLE — GROUP-FIG. NO.

FUEL PUMP AND FILTER, CJ (Continued)
PUMP ASSEMBLY, INJECTION 1986 RENAULT DIESEL, EXPORT CJ-7,8 . . . . . Fig. 14-2800
FUEL FILTER AND HOSES 1986 RENAULT DIESEL, EXPORT CJ-7,8 . . . . . Fig. 14-2900
FUEL PUMP AND FILTER 1981-83 GM FOUR CYLINDER CJ-5,6,7,8, SCRAMBLER . . . . . Fig. 14-3000
FUEL PUMP AND FILTER 1983-86 AMC FOUR CYLINDER CJ-5,6,7,8, SCRAMBLER . . . . . Fig. 14-3100
FUEL PUMP AND FILTER 1981-86 SIX CYLINDER CJ-5,6,7,8, SCRAMBLER . . . . . Fig. 14-3200
FUEL PUMP AND FILTER 1981 EIGHT CYLINDER CJ-5,6,7,8, SCRAMBLER . . . . . Fig. 14-3300

FUEL LINES, CJ
FUEL LINES 1981-86 FOUR CYLINDER DIESEL, EXPORT CJ-5,6,7,8 . . . . . Fig. 14-3400
FUEL LINES, 1981-86 GAS ENGINES, US, CANADA, ECONOMIC COMMISSION OF EUROPE CJ-5,6,7,8, SCRAMBLER . . . . . Fig. 14-3500
FUEL LINES 1981-86 GAS ENGINES, NON-REGULATED MARKETS CJ-5,6,7,8 . . . . . Fig. 14-3600

FUEL TANK, CJ
FUEL TANK 15.0 GALLON CJ-5,6,7,8, SCRAMBLER . . . . . Fig. 14-3700
FUEL TANK 20.0 GALLON CJ-5,6,7,8, SCRAMBLER . . . . . Fig. 14-3800
FUEL CONTAINER 5 GALLON AUXILLIARY, EXPORT, SEVERE USE CJ-5,6,7,8 . . . . . Fig. 14-3900

AIR CLEANERS, XJ
AIR CLEANER DIESEL ENGINE XJ CHEROKEE, XJ WAGONEER, COMANCHE . . . . . Fig. 14-4000
AIR CLEANER FOUR CYLINDER GAS, CARBURETED XJ CHEROKEE, XJ WAGONEER, COMANCHE . . . . Fig. 14-4100
AIR CLEANER 1986 FOUR CYLINDER GAS, INJECTED XJ CHEROKEE, XJ WAGONEER, COMANCHE . . . Fig. 14-4200
AIR CLEANER SIX CYLINDER, V-6 XJ CHEROKEE, XJ WAGONEER, COMANCHE . . . . . Fig. 14-4300

CARBURETORS AND INJECTION, XJ
CARBURETOR AND COMPONENT PARTS FOUR CYLINDER XJ CHEROKEE, XJ WAGONEER, COMANCHE . . . . . Fig. 14-4400
CARBURETOR AND COMPONENT PARTS SIX CYLINDER, V-6, 49 STATES XJ CHEROKEE, XJ WAGONEER, COMANCHE . . . . . Fig. 14-4500
CARBURETOR AND COMPONENT PARTS SIX CYLINDER, V-6, CALIFORNIA XJ CHEROKEE, XJ WAGONEER, COMANCHE . . . . . Fig. 14-4600
FUEL INJECTION SYSTEM 1985-86 RENAULT DIESEL XJ CHEROKEE, XJ WAGONEER, COMANCHE . . . Fig. 14-4700
THROTTLE BODY 1986 FOUR CYLINDER GAS, INJECTED XJ CHEROKEE, XJ WAGONEER, COMANCHE Fig. 14-4800
TURBOCHARGER 1985-86 RENAULT DIESEL XJ CHEROKEE, XJ WAGONEER, COMANCHE . . . . . Fig. 14-4900

ACCELERATOR PEDAL AND LINKAGE, XJ
ACCELERATOR PEDAL AND LINKAGE XJ CHEROKEE, XJ WAGONEER, COMANCHE . . . . . Fig. 14-5000
LINKAGE, AUTOMATIC TRANSMISSION THROTTLE VALVE 1984-86 XJ CHEROKEE, XJ WAGONEER, COMANCHE . . . . . Fig. 14-5100

GROUP 14 - FUEL

ILLUSTRATION TITLE — GROUP-FIG. NO.

ACCELERATOR PEDAL AND LINKAGE, XJ (Continued)
LINKAGE, AUTOMATIC TRANSMISSION THROTTLE VALVE 1984-86 XJ CHEROKEE, XJ WAGONEER, COMANCHE . . . . . Fig. 14-5100

SPEED CONTROL, XJ
SPEED CONTROL, ENGINE COMPARTMENT COMPONENTS 1985-86 RENAULT DIESEL XJ CHEROKEE, XJ WAGONEER, COMANCHE . . . . . Fig. 14-5200
SPEED CONTROL, ENGINE COMPARTMENT COMPONENTS FOUR AND SIX CYLINDER GAS, CARBURETED XJ CHEROKEE, XJ WAGONEER, COMANCHE . . . . . Fig. 14-5300
SPEED CONTROL, ENGINE COMPARTMENT COMPONENTS FOUR CYLINDER GAS, INJECTED XJ CHEROKEE, XJ WAGONEER, COMANCHE . . . . . Fig. 14-5400
SPEED CONTROL, INSTRUMENT PANEL COMPONENTS XJ CHEROKEE, XJ WAGONEER, COMANCHE . Fig. 14-5500

FUEL PUMP AND FILTER, XJ
PUMP ASSEMBLY, INJECTION DIESEL XJ CHEROKEE, XJ WAGONEER, COMANCHE . . . . . Fig. 14-5600
FUEL PUMP AND FILTER FOUR CYLINDER GAS, CARBURETED XJ CHEROKEE, XJ WAGONEER, COMANCHE . . . . . Fig. 14-5700
FUEL PUMP SIX CYLINDER, V-6 XJ CHEROKEE, XJ WAGONEER, COMANCHE . . . . . Fig. 14-5800

FUEL LINES, XJ
FUEL LINES 1985-86 RENAULT DIESEL XJ CHEROKEE, XJ WAGONEER, COMANCHE . . . . . Fig. 14-5900
FUEL LINES 1984-85 FOUR AND SIX CYLINDER, V-6 XJ CHEROKEE, XJ WAGONEER, COMANCHE . . . . Fig. 14-6000
FUEL LINES 1986 FOUR CYLINDER GAS, INJECTED, SIX CYLINDER XJ CHEROKEE, XJ WAGONEER, COMANCHE . . . . . Fig. 14-6100
FUEL LINES 1986 FOUR CYLINDER GAS, CARBURETED COMANCHE . . . . . Fig. 14-6200

FUEL TANK, XJ
FUEL TANK 13.5 OR 20.2 GALLON XJ CHEROKEE, XJ WAGONEER . . . . . Fig. 14-6300
FUEL TANK 16 AND 23.5 GALLON COMANCHE . . . . . Fig. 14-6400
FUEL TANK SKID PLATE COMANCHE . . . . . Fig. 14-6500

AIR CLEANERS, SJ
AIR CLEANER SIX CYLINDER, STANDARD DUTY SJ CHEROKEE, SJ WAGONEER, J10, J20 . . . . . Fig. 14-6600
AIR CLEANER SIX CYLINDER, HEAVY DUTY SJ CHEROKEE, SJ WAGONEER, J10, J20 . . . . . Fig. 14-6700
AIR CLEANER SIX CYLINDER, SEVERE USE SJ CHEROKEE, SJ WAGONEER, J10, J20 . . . . . Fig. 14-6800
AIR CLEANER EIGHT CYLINDER SJ CHEROKEE, SJ WAGONEER, J10, J20 . . . . . Fig. 14-6900

CARBURETORS AND INJECTION, SJ
CARBURETOR AND COMPONENT PARTS SIX CYLINDER SJ CHEROKEE, SJ WAGONEER, J10, J20 . . . . Fig. 14-7000
CARBURETOR AND COMPONENT PARTS EIGHT CYLINDER SJ CHEROKEE, SJ WAGONEER, J10, J20 . Fig. 14-7100

GROUP 14 - FUEL

ILLUSTRATION TITLE	GROUP-FIG. NO.
ACCELERATOR PEDAL AND LINKAGE, SJ	
ACCELERATOR PEDAL AND LINKAGE SIX, EIGHT CYLINDER SJ CHEROKEE, SJ WAGONEER, J10, J20	Fig. 14-7200
LINKAGE, AUTOMATIC TRANSMISSION THROTTLE VALVE SIX, EIGHT CYLINDER SJ CHEROKEE, SJ WAGONEER, J10, J20	Fig. 14-7300
SPEED CONTROL, SJ	
SPEED CONTROL, ENGINE COMPARTMENT COMPONENTS SIX, EIGHT CYLINDER SJ CHEROKEE, SJ WAGONEER, J10, J20	Fig. 14-7400
SPEED CONTROL, INSTRUMENT PANEL COMPONENTS SIX, EIGHT CYLINDER SJ CHEROKEE, SJ WAGONEER, J10, J20	Fig. 14-7500
FUEL PUMP AND FILTER, SJ	
FUEL PUMP AND FILTER SIX CYLINDER SJ CHEROKEE, SJ WAGONEER, J10, J20	Fig. 14-7600
FUEL PUMP AND FILTER EIGHT CYLINDER SJ CHEROKEE, SJ WAGONEER, J10, J20	Fig. 14-7700
FUEL LINES, SJ	
FUEL LINES SIX, EIGHT CYLINDER SJ CHEROKEE, SJ WAGONEER, J10, J20	Fig. 14-7800
FUEL TANK, SJ	
FUEL TANK SJ CHEROKEE, SJ WAGONEER	Fig. 14-7900
FUEL TANK J10, J20	Fig. 14-8000

AIR CLEANER 1981-85 ISUZU DIESEL, EXPORT, LEFT HAND DRIVE CJ-5,6,7,8
Figure 14-100

81J14 10D

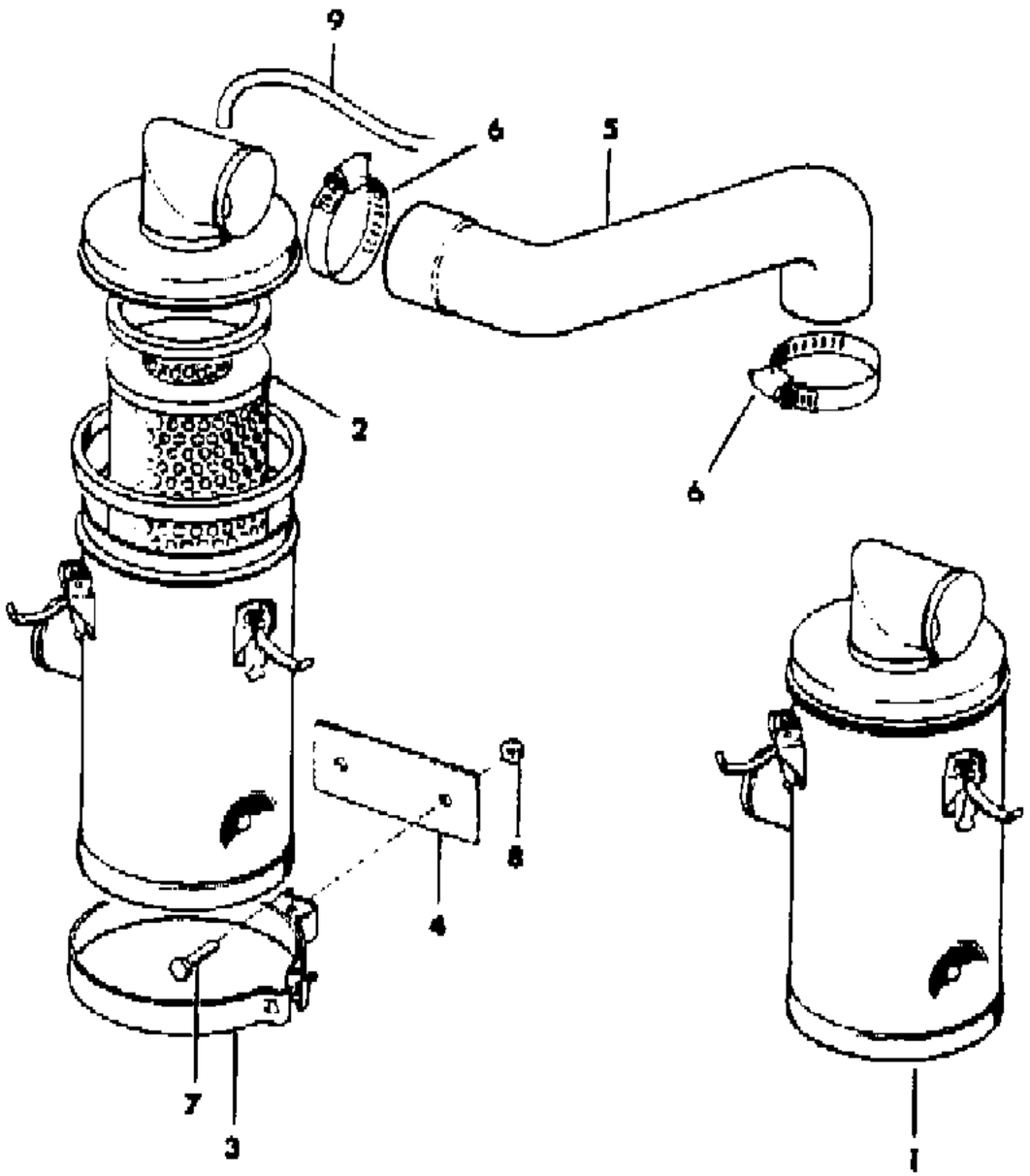

ITEM	PART NUMBER	QTY	BODY	MODEL	DESCRIPTION
1	J806 0603	1			CLEANER, Air ***
2	J806 0627	1			ELEMENT, Air Cleaner
3	J536 1568	2			BRACKET
4	J536 1832	2			REINFORCEMENT
5	J536 1672	1			HOSE
6	J536 4242	2			CLAMP
7	J027 3773	4			BOLT
8	J400 4747	4			NUT
9	J812 5812	AR			HOSE, Bulk

MODEL CODES

16=Cherokee 2 Dr.(1981-83)	78=Cherokee 4WD-4 Dr.(1984-86)	64=Comanche 2WD-6 Ft. Box(1986)	25=J-10 Truck 7 Ft. Box(1981-84)
17=Cherokee 2 Dr.(1981-83)	85=CJ-5 (1981-83)	66=Comanche 2WD-7 Ft. Box(1986)	26=J10 Truck 8 Ft. Box(1981-86)
73=Cherokee 2WD-2 Dr.(1984-86)	86=CJ-6(1981)	63=Comanche 4WD-6 Ft. Box(1986)	27=J-20 Truck 8 Ft. Box(1981-86)
74=Cherokee 2WD-4 Dr.(1984-86)	87=CJ-7(1981-86)	65=Comanche 4WD-7 Ft. Box(1986)	15=Wagoneer 4 Dr.(1981-83)
18=Cherokee 4 Dr.(1981-83)	88=CJ-8, Scrambler(1981-86)	15=Grand Wagoneer 4 Dr.(1984-86)	75=Wagoneer 4WD-4 Dr.(1984-86)
77=Cherokee 4WD-2 Dr.(1984-86)			

BODY
CJ=CJ-5, CJ-6, CJ-7, CJ-8, Scrambler(1981-86)
MJ=Comanche Pickup(1986)

STYLES
SJ=Wagoneer(1981-83), Grand Wagoneer(1984-86), Cherokee(1981-83), J-10, J-20(1981-86)
XJ=Wagoneer(1984-86), Cherokee(1984-86)

AR = Use as Required - = Non Illustrated Part P.A.R. = Paint as Required

« RETURN TO GROUP INDEX

AIR CLEANER 1981-85 ISUZU DIESEL, EXPORT, RIGHT HAND DRIVE CJ-5,6,7,8
Figure 14-200

81J14 200

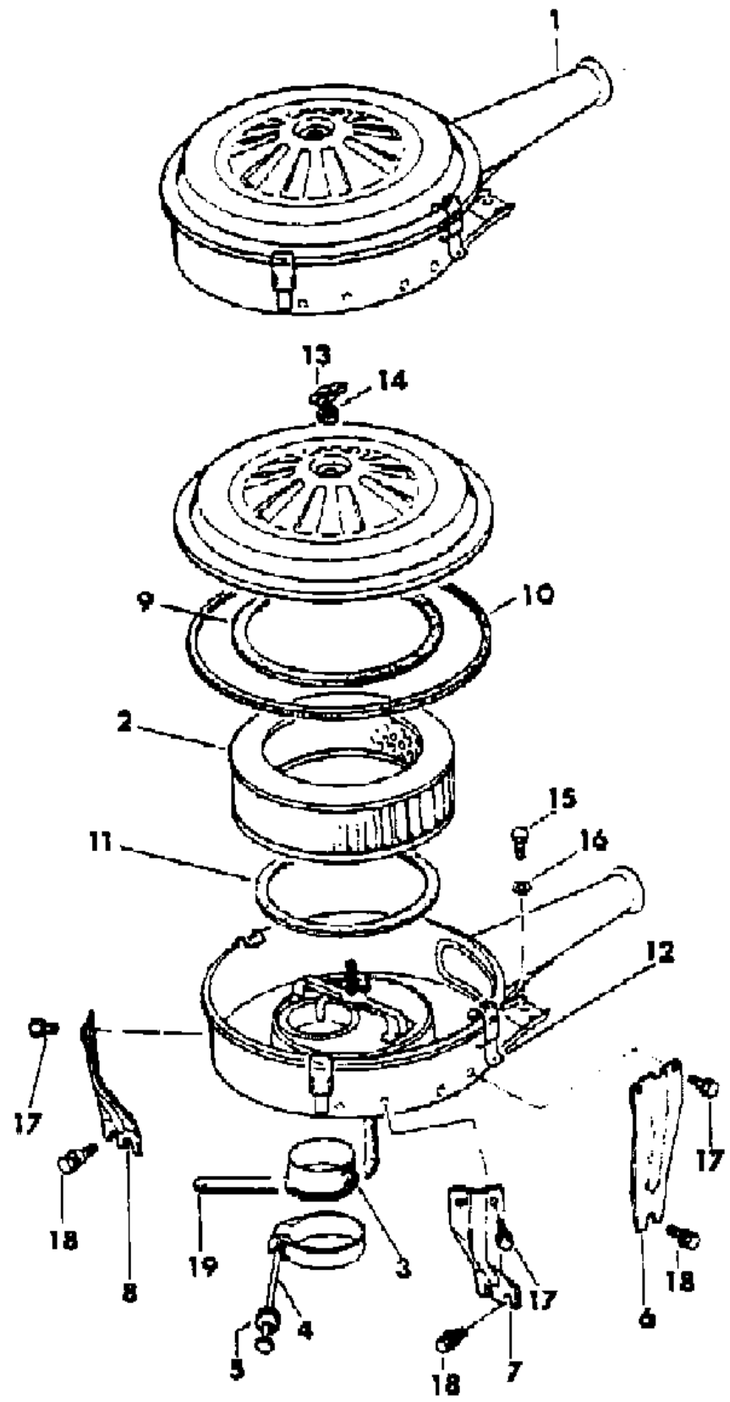

ITEM	PART NUMBER	QTY	BODY	MODEL	DESCRIPTION
1					CLEANER, Air ***
	J806 0302	1			1981-83
	J536 3799	1			1984-85
2	J806 0306	1			ELEMENT, Air Cleaner
3	J806 0312	1			INSULATOR
4	J806 0054	1			BOLT
5	J806 0307	1			GROMMET
6	J806 0309	1			BRACKET, Front
7	J806 0311	1			BRACKET, Center
8	J806 0310	1			BRACKET, Rear
9	J806 0305	1			GASKET
10	J806 0303	1			GASKET
11	J806 0304	1			GASKET
12	J806 0308	4			CLIP
13	J806 0313	1			NUT, Wing
14	J806 0314	1			WASHER
15	J806 0015	4			BOLT
16	J806 0075	4			WASHER
17	J806 0014	6			BOLT
18	J806 0026	5			BOLT
19	J806 0504	1			HOSE

MODEL CODES

16=Cherokee 2 Dr.(1981-83)
17=Cherokee 2 Dr.(1981-83)
73=Cherokee 2WD-2 Dr.(1984-86)
74=Cherokee 2WD-4 Dr.(1984-86)
18=Cherokee 4 Dr.(1981-83)
77=Cherokee 4WD-2 Dr.(1984-86)
78=Cherokee 4WD-4 Dr.(1984-86)
85=CJ-5 (1981-83)
86=CJ-6(1981)
87=CJ-7(1981-86)
88=CJ-8, Scrambler(1981-86)
64=Comanche 2WD-6 Ft. Box(1986)
66=Comanche 2WD-7 Ft. Box(1986)
63=Comanche 4WD-6 Ft. Box(1986)
65=Comanche 4WD-7 Ft. Box(1986)
15=Grand Wagoneer 4 Dr.(1984-86)
25=J-10 Truck 7 Ft. Box(1981-84)
26=J10 Truck 8 Ft. Box(1981-86)
27=J-20 Truck 8 Ft. Box(1981-86)
15=Wagoneer 4 Dr.(1981-83)
75=Wagoneer 4WD-4 Dr.(1984-86)

BODY
CJ=CJ-5, CJ-6, CJ-7, CJ-8, Scrambler(1981-86)
MJ=Comanche Pickup(1986)

STYLES
SJ=Wagoneer(1981-83), Grand Wagoneer(1984-86), Cherokee(1981-83), J-10, J-20(1981-86)
XJ=Wagoneer(1984-86), Cherokee(1984-86)

AR = Use as Required - = Non Illustrated Part P.A.R. = Paint as Required

« RETURN TO GROUP INDEX

AIR CLEANER 1986 RENAULT DIESEL, EXPORT CJ-7,8
Figure 14-300

81J14 300

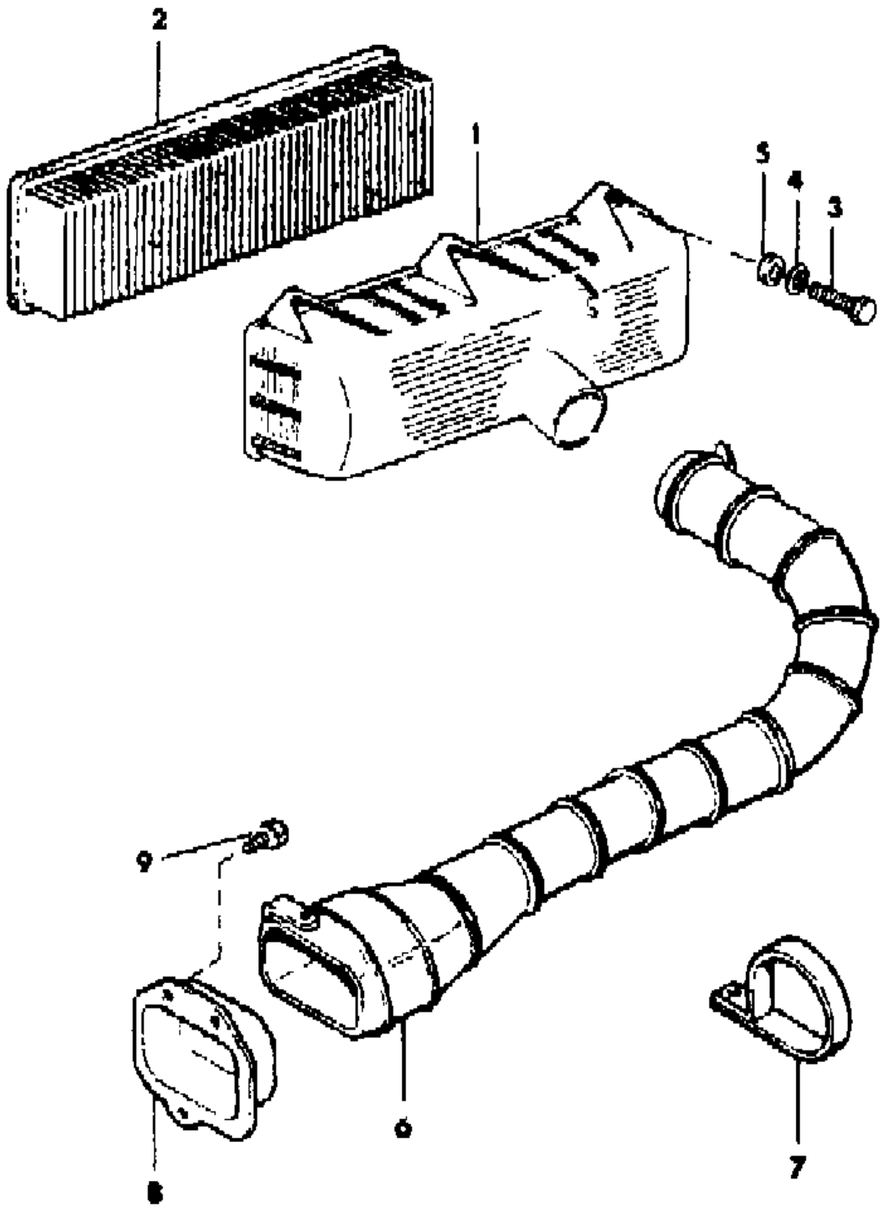

ITEM	PART NUMBER	QTY	BODY	MODEL	DESCRIPTION
1	T068 9539	1			CLEANER, Air ***
2	T067 8752	1			ELEMENT, Air Cleaner
3	T300 1122	6			SCREW
4	T140 2062	6			WASHER
5	T305 6027	6			NUT
6	J536 3783	1			TUBE, Air Intake
7	J536 4242	1			CLAMP
8	J546 3866	1			ADAPTER
9	J812 0052	3			SCREW

MODEL CODES

16=Cherokee 2 Dr.(1981-83)
17=Cherokee 2 Dr.(1981-83)
73=Cherokee 2WD-2 Dr.(1984-86)
74=Cherokee 2WD-4 Dr.(1984-86)
18=Cherokee 4 Dr.(1981-83)
77=Cherokee 4WD-2 Dr.(1984-86)
78=Cherokee 4WD-4 Dr.(1984-86)
85=CJ-5 (1981-83)
86=CJ-6(1981)
87=CJ-7(1981-86)
88=CJ-8, Scrambler(1981-86)
64=Comanche 2WD-6 Ft. Box(1986)
66=Comanche 2WD-7 Ft. Box(1986)
63=Comanche 4WD-6 Ft. Box(1986)
65=Comanche 4WD-7 Ft. Box(1986)
15=Grand Wagoneer 4 Dr.(1984-86)
25=J-10 Truck 7 Ft. Box(1981-84)
26=J10 Truck 8 Ft. Box(1981-86)
27=J-20 Truck 8 Ft. Box(1981-86)
15=Wagoneer 4 Dr.(1981-83)
75=Wagoneer 4WD-4 Dr.(1984-86)

BODY
CJ=CJ-5, CJ-6, CJ-7, CJ-8, Scrambler(1981-86)
MJ=Comanche Pickup(1986)

STYLES
SJ=Wagoneer(1981-83), Grand Wagoneer(1984-86), Cherokee(1981-83), J-10, J-20(1981-86)
XJ=Wagoneer(1984-86), Cherokee(1984-86)

AR = Use as Required - = Non Illustrated Part P.A.R. = Paint as Required

« RETURN TO GROUP INDEX

AIR CLEANER 1981-83 GM FOUR CYLINDER CJ-5,6,7,8, SCRAMBLER
Figure 14-400

81J14 400

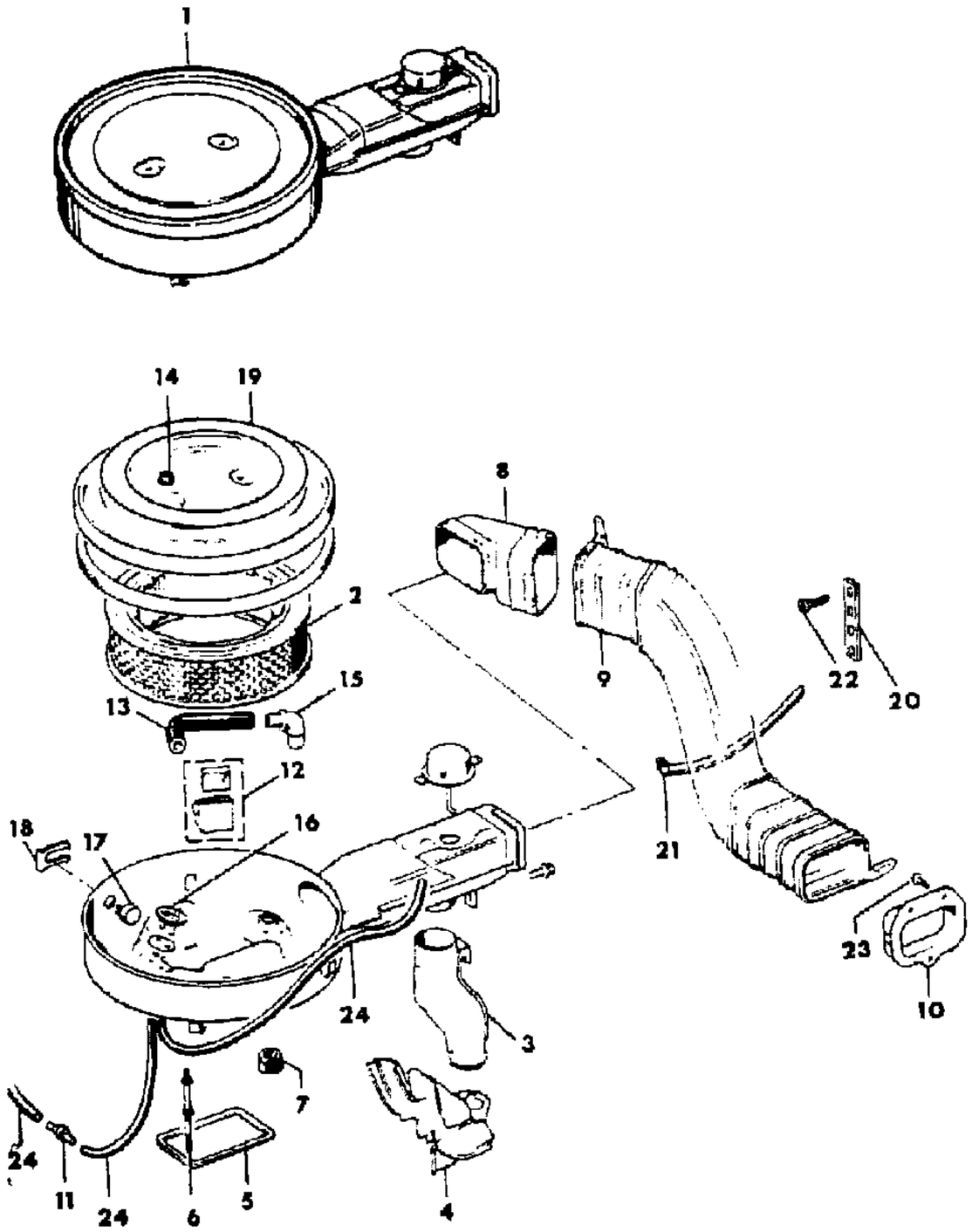

ITEM	PART NUMBER	QTY	BODY	MODEL	DESCRIPTION
1					CLEANER, Air ***
	J323 8109	1			1981: US-49 States
	J343 9836	1			1981: US-California, with Manual Transmission
	J324 1162	1			1981: US-California, with Automatic Transmission
	J324 1949	1			1982: US-California
	J323 8109	1		87	1982: EXPORT, Australian Design Rules, Sweden
	J324 1713	1			1982-83: US-49 States
	J324 1713	1			1982-83: EXPORT, Economic Commission of Europe, Non-Regulated Markets
	J324 0823	1			1983: US-California
	J324 1713	1			1983: CANADA
	J324 1713	1			1983: EXPORT, Australian Design Rules
2	J899 1386	1			ELEMENT, Air Cleaner
3	J323 6608	1			TUBE, Hot Air
4					SHROUD, Heat ***
	J813 2333	1			1981-82
	J813 4695	1			1983: Inner
	J813 4696	1			1983: Outer
5	J813 2330	1			GASKET
6	J813 2329	2			BOLT, Stud
7	J400 6504	1			GROMMET
8	J323 6526	1			DUCT
9	J535 8444	1			DUCT
10	J546 3866	1			ADAPTER
11	J322 8426	1			VALVE, Check
12	J323 6695	1			FILTER PACKAGE
13	J323 6471	1			HOSE
14	3300 1796	2			NUT, Wing
15	J323 6685	1			ELBOW
16	J812 8338	1			SENSOR PACKAGE
17	J323 5329	1			SWITCH, Thermal Vacuum
18	J400 6334	1			CLIP
19	J536 1946	1			LABEL, Air Cleaner
20	J536 1473	1			PLATE
21	J400 6609	1			STRAP
22	J941 4721	1			SCREW
23	J942 1073	1			SCREW
24	J812 5812	AR			HOSE, Bulk

MODEL CODES
16=Cherokee 2 Dr.(1981-83)
17=Cherokee 2 Dr.(1981-83)
73=Cherokee 2WD-2 Dr.(1984-86)
74=Cherokee 2WD-4 Dr.(1984-86)
18=Cherokee 4 Dr.(1981-83)
77=Cherokee 4WD-2 Dr.(1984-86)
78=Cherokee 4WD-4 Dr.(1984-86)
85=CJ-5 (1981-83)
86=CJ-6(1981)
87=CJ-7(1981-86)
88=CJ-8, Scrambler(1981-86)
64=Comanche 2WD-6 Ft. Box(1986)
66=Comanche 2WD-7 Ft. Box(1986)
63=Comanche 4WD-6 Ft. Box(1986)
65=Comanche 4WD-7 Ft. Box(1986)
15=Grand Wagoneer 4 Dr.(1984-86)
25=J-10 Truck 7 Ft. Box(1981-84)
26=J10 Truck 8 Ft. Box(1981-86)
27=J-20 Truck 8 Ft. Box(1981-86)
15=Wagoneer 4 Dr.(1981-83)
75=Wagoneer 4WD-4 Dr.(1984-86)

BODY
CJ=CJ-5, CJ-6, CJ-7, CJ-8, Scrambler(1981-86)
MJ=Comanche Pickup(1986)

STYLES
SJ=Wagoneer(1981-83), Grand Wagoneer(1984-86), Cherokee(1981-83), J-10, J-20(1981-86)
XJ=Wagoneer(1984-86), Cherokee(1984-86)

AR = Use as Required - = Non Illustrated Part P.A.R. = Paint as Required

« RETURN TO GROUP INDEX

AIR CLEANER 1983-86 AMC FOUR CYLINDER CJ-5,7,8, SCRAMBLER
Figure 14-500

81J14 500

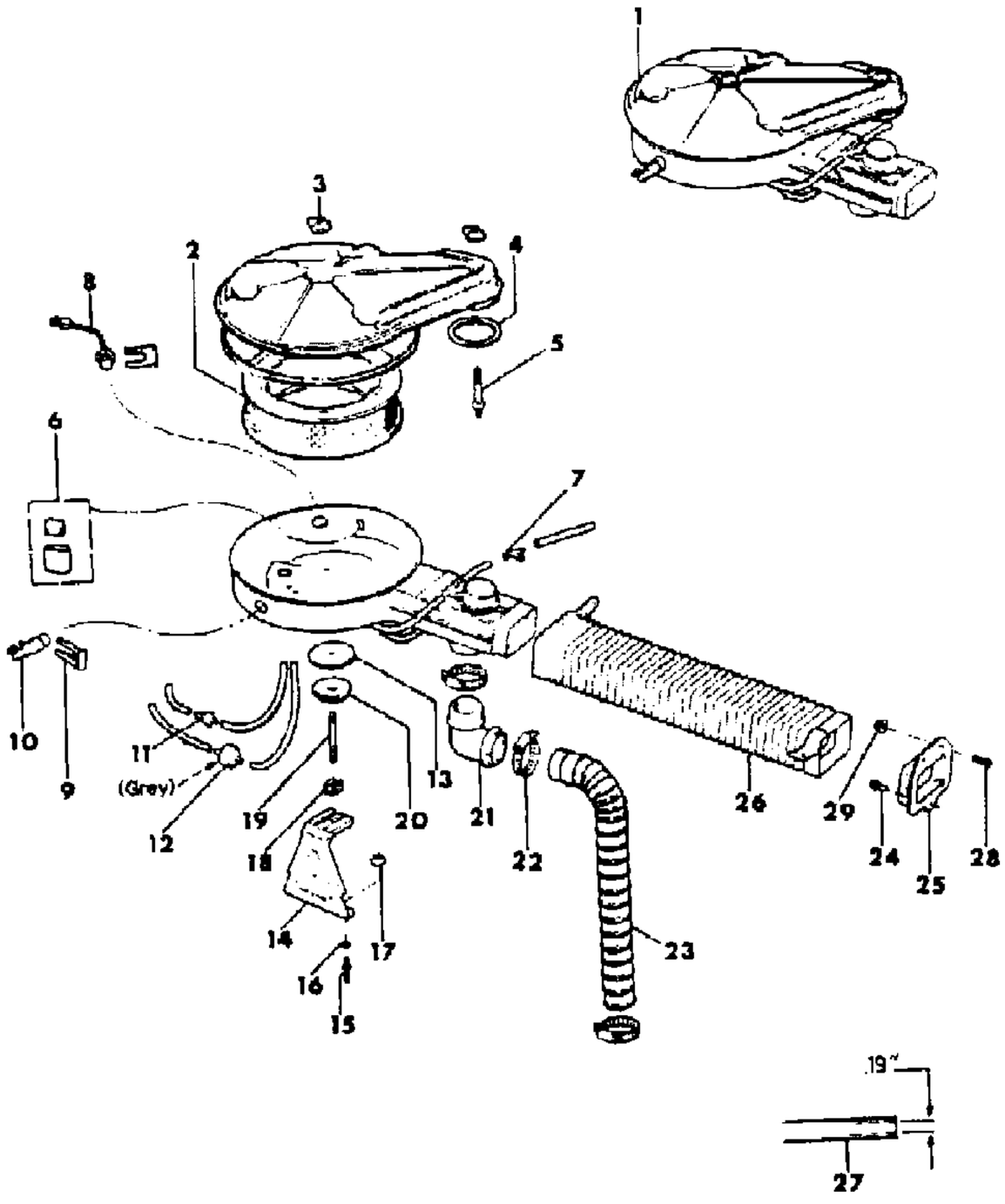

ITEM	PART NUMBER	QTY	BODY	MODEL	DESCRIPTION
1					CLEANER, Air ***
	3300 1465	1			1983: US-49 States
	3300 1463	1			1984-86
	3300 1464	1			1984-86: CANADA
	3300 1466	1			1984-86: EXPORT, Non-Regulated Markets
2	J899 1386	1			ELEMENT, Air Cleaner
3	3420 1676	2			NUT, Wing
4	3300 1475	1			GASKET
5	3420 1841	1			BOLT, Stud
6	J323 6695	1			FILTER PACKAGE
7	J321 0891	1			TEE
8	3300 0630	1			SWITCH, Thermal Electric
9	J400 6571	1			CLIP
10	J323 7457	1			SWITCH, Thermal Vacuum
11	J322 8426	1			VALVE, Check
12	J323 5938	1			VALVE, Reverse Delay
13	J323 4485	1			GASKET
14	3300 1245	1			BRACKET, Mounting
15	J400 7139	2			BOLT, Stud
16	J044 6188	2			WASHER
17	J400 4469	2			NUT
18	3420 1831	1			NUT, Cage
19	3420 1841	1			STUD
20	3300 1529	1			SLIDER ***
21	J323 2439	1			ELBOW
22	J320 3079	3			CLAMP, Hose
23	3300 3391	1			TUBE, Hot Air
24	J942 1073	1			SCREW
25	J546 3866	1			ADAPTER, Air Intake
26	J535 7889	1			TUBE, Air Intake
27	J812 5812	AR			HOSE, Bulk
28	S150 1638	2			SCREW
29	1150 2702	2			NUT

MODEL CODES

16=Cherokee 2 Dr.(1981-83)
17=Cherokee 2 Dr.(1981-83)
73=Cherokee 2WD-2 Dr.(1984-86)
74=Cherokee 2WD-4 Dr.(1984-86)
18=Cherokee 4 Dr.(1981-83)
77=Cherokee 4WD-2 Dr.(1984-86)
78=Cherokee 4WD-4 Dr.(1984-86)
85=CJ-5 (1981-83)
86=CJ-6(1981)
87=CJ-7(1981-86)
88=CJ-8, Scrambler(1981-86)
64=Comanche 2WD-6 Ft. Box(1986)
66=Comanche 2WD-7 Ft. Box(1986)
63=Comanche 4WD-6 Ft. Box(1986)
65=Comanche 4WD-7 Ft. Box(1986)
15=Grand Wagoneer 4 Dr.(1984-86)
25=J-10 Truck 7 Ft. Box(1981-84)
26=J10 Truck 8 Ft. Box(1981-86)
27=J-20 Truck 8 Ft. Box(1981-86)
15=Wagoneer 4 Dr.(1981-83)
75=Wagoneer 4WD-4 Dr.(1984-86)

BODY
CJ=CJ-5, CJ-6, CJ-7, CJ-8, Scrambler(1981-86)
MJ=Comanche Pickup(1986)

STYLES
SJ=Wagoneer(1981-83), Grand Wagoneer(1984-86), Cherokee(1981-83), J-10, J-20(1981-86)
XJ=Wagoneer(1984-86), Cherokee(1984-86)

AR = Use as Required - = Non Illustrated Part P.A.R. = Paint as Required

« RETURN TO GROUP INDEX

AIR CLEANER SIX CYLINDER, WITHOUT POWER BRAKES CJ-5,6,7,8, SCRAMBLER
Figure 14-600

81J14 600

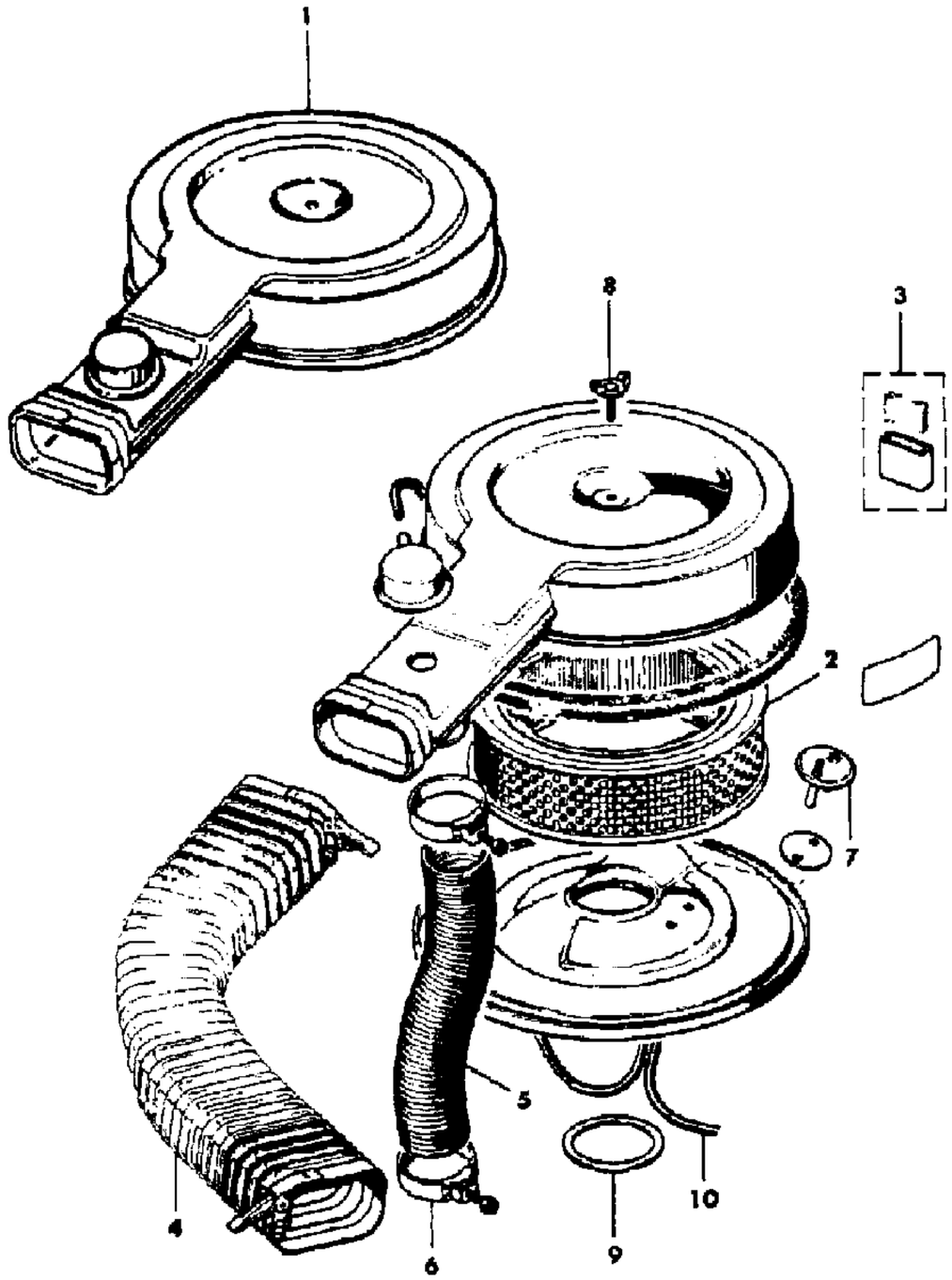

ITEM	PART NUMBER	QTY	BODY	MODEL	DESCRIPTION
1					CLEANER, Air ***
	J324 0312	1		85,87,8	1981: CANADA
	J324 0312	1		87	1981: EXPORT, Australian Design Rules
	J324 0312	1			1981: EXPORT, Economic Commission of Europe, Non-Regulated Markets, with Manual Transmission
	J323 8104	1			1981-82
	J324 1327	1			1982: CANADA
	J324 1327	1			1982: Non-Regulated Markets
	J324 1327	1		87	1982: EXPORT, Australian Design Rules
	3300 0342	1			1983
	3300 0769	1			1983: CANADA
	J805 1832	1			1983: EXPORT, Non-Regulated Markets, with Polywrap
	J805 1832	1			1983: EXPORT, Non-Regulated Markets, Right Hand Drive, with Polywrap
	J324 1327	1		87,88	1983-85: EXPORT, Economic Commission of Europe, Left Hand Drive
	J324 1327	1		87,88	1983-85: EXPORT, Australian Design Rules, Economic Commission of Europe, Right Hand Drive
	J805 1772	1			1983-86: Non-Regulated Markets, Left Hand Drive
	J805 1772	1			1983-86: EXPORT, Non-Regulated Markets, Right Hand Drive
	J805 3022	1		87,88	1983-86: EXPORT, Severe Use
	J324 1327	1		87,88	1984-85: EXPORT, Sweden, Switzerland, Left Hand Drive
	3300 2064	1			1984-86
	3300 2065	1			1984-86: CANADA
	3300 2069	1		87,88	1986: EXPORT, Economic Commission of Europe, Right Hand Drive
2	J899 1386	1			ELEMENT, Air Cleaner
3	J323 6695	1			FILTER PACKAGE
4	J322 9610	1			DUCT
5	J322 9841	1			TUBE, Hot Air
6	J320 3079	2			CLAMP
7	J812 8338	1			SENSOR, Air Temp
8	J315 1735	1			NUT
9	3300 1475	1			GASKET
10	J812 5812	AR			HOSE, Bulk

MODEL CODES

16=Cherokee 2 Dr.(1981-83)	78=Cherokee 4WD-4 Dr.(1984-86)	64=Comanche 2WD-6 Ft. Box(1986)	25=J-10 Truck 7 Ft. Box(1981-84)
17=Cherokee 2 Dr.(1981-83)	85=CJ-5 (1981-83)	66=Comanche 2WD-7 Ft. Box(1986)	26=J10 Truck 8 Ft. Box(1981-86)
73=Cherokee 2WD-2 Dr.(1984-86)	86=CJ-6(1981)	63=Comanche 4WD-6 Ft. Box(1986)	27=J-20 Truck 8 Ft. Box(1981-86)
74=Cherokee 2WD-4 Dr.(1984-86)	87=CJ-7(1981-86)	65=Comanche 4WD-7 Ft. Box(1986)	15=Wagoneer 4 Dr.(1981-83)
18=Cherokee 4 Dr.(1981-83)	88=CJ-8, Scrambler(1981-86)	15=Grand Wagoneer 4 Dr.(1984-86)	75=Wagoneer 4WD-4 Dr.(1984-86)
77=Cherokee 4WD-2 Dr.(1984-86)			

BODY
CJ=CJ-5, CJ-6, CJ-7, CJ-8, Scrambler(1981-86)
MJ=Comanche Pickup(1986)

STYLES
SJ=Wagoneer(1981-83), Grand Wagoneer(1984-86), Cherokee(1981-83), J-10, J-20(1981-86)
XJ=Wagoneer(1984-86), Cherokee(1984-86)

AR = Use as Required - = Non Illustrated Part P.A.R. = Paint as Required

« RETURN TO GROUP INDEX

AIR CLEANER SIX CYLINDER, WITH POWER BRAKES CJ-5,6,7,8, SCRAMBLER
Figure 14-700

81J14 700

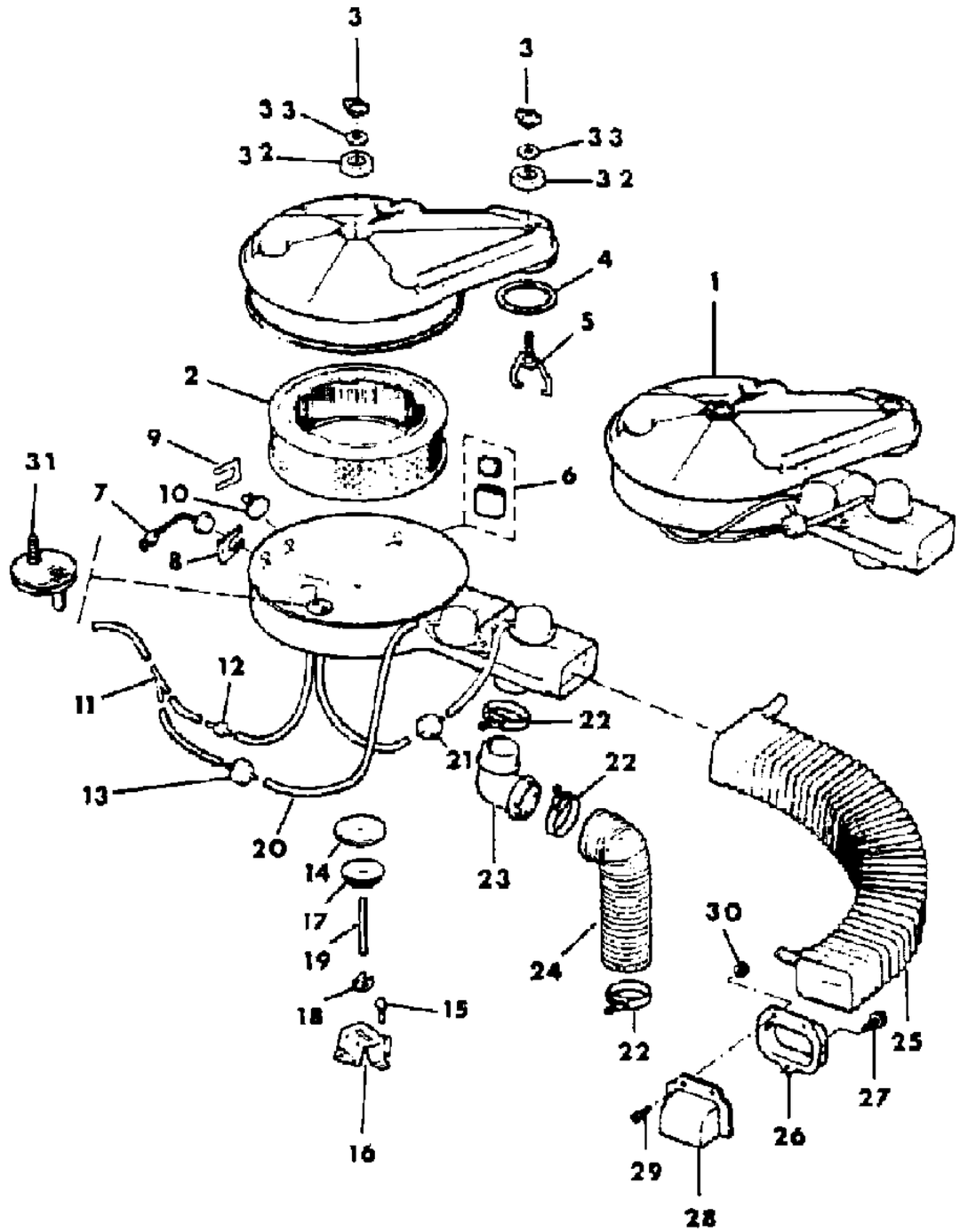

ITEM	PART NUMBER	QTY	BODY	MODEL	DESCRIPTION
1					CLEANER, Air ***
	J324 0310	1		85,87,8	1981: CANADA
	J324 0312	1		87	1981: EXPORT, Australian Design Rules
	J324 0312	1			1981: EXPORT, Right Hand Drive
	J324 0310	1			1981: EXPORT, Economic Commission of Europe, Non-Regulated Markets
	J323 9097	1			1981-82
	J324 1329	1		85,87,8	1981-86: EXPORT, Australian Design Rules, Economic Commission of Europe, with Polywrap
	J324 1329	1			1982: CANADA
	J324 1327	1			1982: EXPORT, Right Hand Drive
	5300 0440	1			1983
	5300 0656	1			1983: CANADA
	J805 1832	1			1983: EXPORT, Non-Regulated Markets, Right Hand Drive, with Polywrap
	J324 1327	1		87,88	1983-85: EXPORT, Australian Design Rules, Economic Commission of Europe, Right Hand Drive
	5300 0440	1			1983-85: Japan
	J805 1772	1			1983-86: EXPORT, Non-Regulated Markets, Right Hand Drive
	J805 1832	1			1983-86: EXPORT, Non-Regulated Markets, with Polywrap
	J805 3022	1		87,88	1983-86: EXPORT, Severe Use
	J324 1329	1		87,88	1984-85: EXPORT, Sweden, Switzerland
	3300 2082	1			1984-86
	3300 2083	1			1984-86: CANADA
	3300 2069	1			1986: EXPORT, Economic Commission of Europe, Right Hand Drive
2	J899 1386	1			ELEMENT, Air Cleaner
3	J315 1735	2			NUT, Wing
4	J317 2428	1			GASKET
5					BAIL, Air Cleaner Retaining ***
	J323 0803	1			1981
	J323 1263	1			1982-86
6	J323 6695	1			FILTER PACKAGE
7					SWITCH, Thermal Electric
	J324 0149	1			1981-82: US, CANADA
	3300 0630	1			1983-86: US, CANADA
8					CLIP, Retaining
	J400 6784	1			US, CANADA
9					CLIP, Retaining

MODEL CODES

16=Cherokee 2 Dr.(1981-83)	78=Cherokee 4WD-4 Dr.(1984-86)	64=Comanche 2WD-6 Ft. Box(1986)	25=J-10 Truck 7 Ft. Box(1981-84)
17=Cherokee 2 Dr.(1981-83)	85=CJ-5 (1981-83)	66=Comanche 2WD-7 Ft. Box(1986)	26=J10 Truck 8 Ft. Box(1981-86)
73=Cherokee 2WD-2 Dr.(1984-86)	86=CJ-6(1981)	63=Comanche 4WD-6 Ft. Box(1986)	27=J-20 Truck 8 Ft. Box(1981-86)
74=Cherokee 2WD-4 Dr.(1984-86)	87=CJ-7(1981-86)	65=Comanche 4WD-7 Ft. Box(1986)	15=Wagoneer 4 Dr.(1981-83)
18=Cherokee 4 Dr.(1981-83)	88=CJ-8, Scrambler(1981-86)	15=Grand Wagoneer 4 Dr.(1984-86)	75=Wagoneer 4WD-4 Dr.(1984-86)
77=Cherokee 4WD-2 Dr.(1984-86)			

BODY
CJ=CJ-5, CJ-6, CJ-7, CJ-8, Scrambler(1981-86)
MJ=Comanche Pickup(1986)

STYLES
SJ=Wagoneer(1981-83), Grand Wagoneer(1984-86), Cherokee(1981-83), J-10, J-20(1981-86)
XJ=Wagoneer(1984-86), Cherokee(1984-86)

AR = Use as Required - = Non Illustrated Part P.A.R. = Paint as Required

AIR CLEANER SIX CYLINDER, WITH POWER BRAKES CJ-5,6,7,8, SCRAMBLER
Figure 14-700

81J14 700

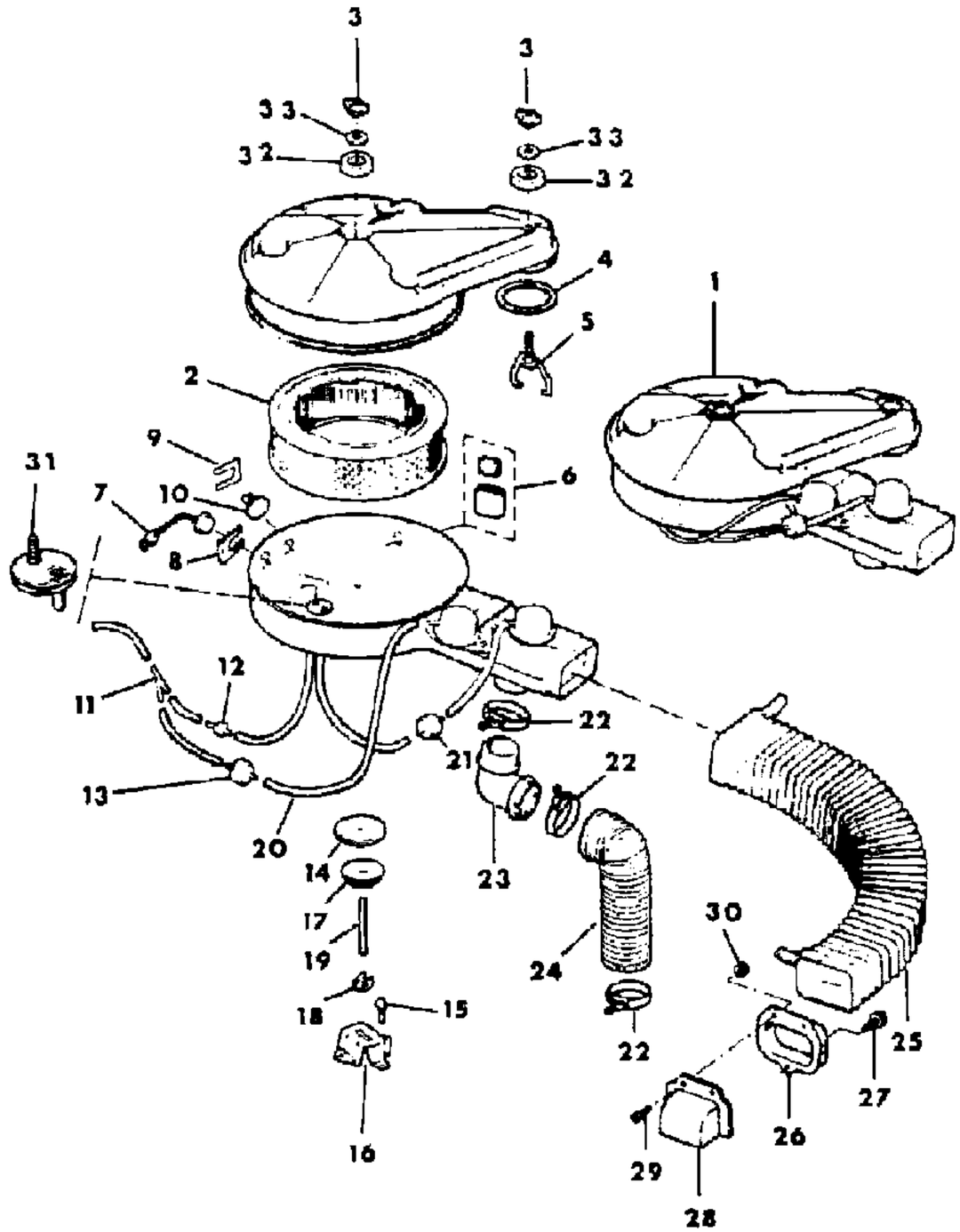

ITEM	PART NUMBER	QTY	BODY	MODEL	DESCRIPTION
	J400 6334	1			US, CANADA
10					SWITCH, Thermal Vacuum
	J323 5329	1			US, CANADA
11	J321 0891	1			CONNECTOR
12	J322 8426	1			VALVE, Check
13	J323 7141	1			VALVE, Delay
14	J323 4485	1			GASKET
15	J400 5731	3			SCREW
16	J323 9648	1			BRACKET, Mounting
17					SLIDER ***
	J322 6360	1			1981
	J324 1389	1			1982-86
18	J400 1946	1			NUT, Cage
19	J400 5759	1			STUD
20	J812 5812	AR			HOSE, Bulk
21					VALVE, Delay
	J323 5938	1			US, CANADA, Grey ***
22	J320 3079	3			CLAMP
23	J323 2439	1			ELBOW
24	3300 3391	1			TUBE, Hot Air
25	J535 9272	1			TUBE, Air Intake
26	J546 3866	1			ADAPTER, Air Intake
27	J942 1073	1			SCREW
28	5300 5120	1			DEFLECTOR ***
29	3420 2344	2			SCREW
30	1150 2702	2			NUT
31					SENSOR, Intake, Air Temp
	J812 8338	1			1981-85
32	3300 1941	2			GROMMET
33	J420 0161	2			WASHER

MODEL CODES
16=Cherokee 2 Dr.(1981-83)
17=Cherokee 2 Dr.(1981-83)
73=Cherokee 2WD-2 Dr.(1984-86)
74=Cherokee 2WD-4 Dr.(1984-86)
18=Cherokee 4 Dr.(1981-83)
77=Cherokee 4WD-2 Dr.(1984-86)
78=Cherokee 4WD-4 Dr.(1984-86)
85=CJ-5 (1981-83)
86=CJ-6(1981)
87=CJ-7(1981-86)
88=CJ-8, Scrambler(1981-86)
64=Comanche 2WD-6 Ft. Box(1986)
66=Comanche 2WD-7 Ft. Box(1986)
63=Comanche 4WD-6 Ft. Box(1986)
65=Comanche 4WD-7 Ft. Box(1986)
15=Grand Wagoneer 4 Dr.(1984-86)
25=J-10 Truck 7 Ft. Box(1981-84)
26=J10 Truck 8 Ft. Box(1981-86)
27=J-20 Truck 8 Ft. Box(1981-86)
15=Wagoneer 4 Dr.(1981-83)
75=Wagoneer 4WD-4 Dr.(1984-86)

BODY
CJ=CJ-5, CJ-6, CJ-7, CJ-8, Scrambler(1981-86)
MJ=Comanche Pickup(1986)

STYLES
SJ=Wagoneer(1981-83), Grand Wagoneer(1984-86), Cherokee(1981-83), J-10, J-20(1981-86)
XJ=Wagoneer(1984-86), Cherokee(1984-86)

AR = Use as Required - = Non Illustrated Part P.A.R. = Paint as Required

« RETURN TO GROUP INDEX

AIR CLEANER EIGHT CYLINDER CJ-5,6,7,8, SCRAMBLER
Figure 14-800

81J14 800

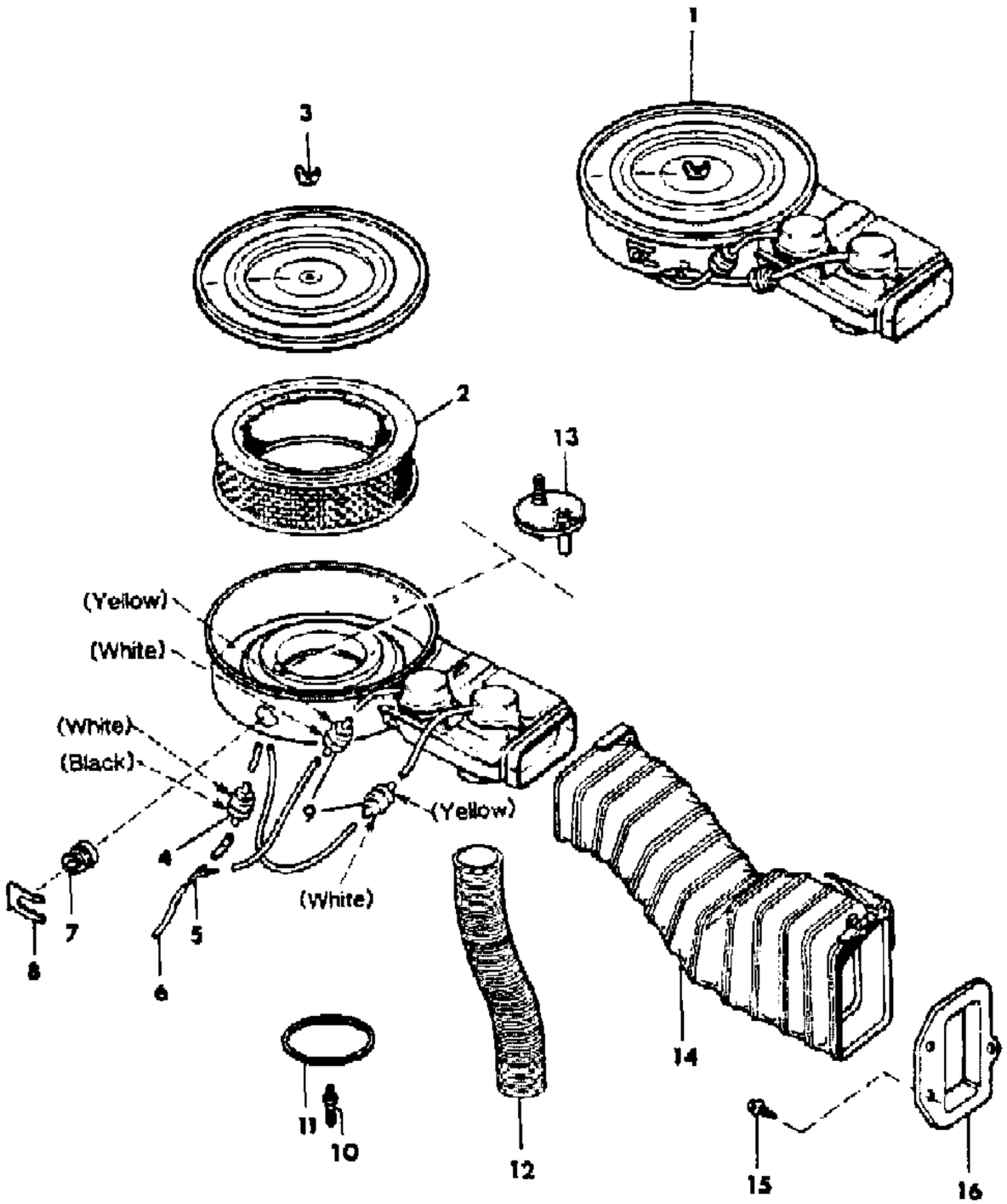

ITEM	PART NUMBER	QTY	BODY	MODEL	DESCRIPTION
1					CLEANER, Air ***
	J323 8103	1			1981
	J324 0215	1			1981: CANADA
	J324 0215	1		85,87	1981: EXPORT, Non-Regulated Markets
2	J899 2661	1			ELEMENT, Air Cleaner
3	J315 1735	1			NUT
4	J322 8426	1			VALVE, Check
5	J321 0891	1			CONNECTOR, Tee
6	J812 5812	1			HOSE, Bulk
7	J323 5329	1			SWITCH, Vacuum
8	J400 6334	1			CLIP, Retaining
9	J323 7141	2			VALVE, Reverse Delay
10	J323 0269	1			STUD
11	J319 1884	1			GASKET, Air Cleaner
12	3300 3391	1			TUBE, Hot Air
13	J813 8338	1			SENSOR, Air Temp
14	J535 7889	1			TUBE, Air Intake
15	J942 1073	3			SCREW
16	J546 3866	1			ADAPTER, Air Intake

MODEL CODES
16=Cherokee 2 Dr.(1981-83)
17=Cherokee 2 Dr.(1981-83)
73=Cherokee 2WD-2 Dr.(1984-86)
74=Cherokee 2WD-4 Dr.(1984-86)
18=Cherokee 4 Dr.(1981-83)
77=Cherokee 4WD-2 Dr.(1984-86)
78=Cherokee 4WD-4 Dr.(1984-86)
85=CJ-5 (1981-83)
86=CJ-6(1981)
87=CJ-7(1981-86)
88=CJ-8, Scrambler(1981-86)
64=Comanche 2WD-6 Ft. Box(1986)
66=Comanche 2WD-7 Ft. Box(1986)
63=Comanche 4WD-6 Ft. Box(1986)
65=Comanche 4WD-7 Ft. Box(1986)
15=Grand Wagoneer 4 Dr.(1984-86)
25=J-10 Truck 7 Ft. Box(1981-84)
26=J10 Truck 8 Ft. Box(1981-86)
27=J-20 Truck 8 Ft. Box(1981-86)
15=Wagoneer 4 Dr.(1981-83)
75=Wagoneer 4WD-4 Dr.(1984-86)

BODY
CJ=CJ-5, CJ-6, CJ-7, CJ-8, Scrambler(1981-86)
MJ=Comanche Pickup(1986)

STYLES
SJ=Wagoneer(1981-83), Grand Wagoneer(1984-86), Cherokee(1981-83), J-10, J-20(1981-86)
XJ=Wagoneer(1984-86), Cherokee(1984-86)

AR = Use as Required - = Non Illustrated Part P.A.R. = Paint as Required

« RETURN TO GROUP INDEX

CARBURETOR AND COMPONENT PARTS 1981-83 GM FOUR CYLINDER, US 49-STATES CJ-5,6,7,8, SCRAMBLER
Figure 14-900

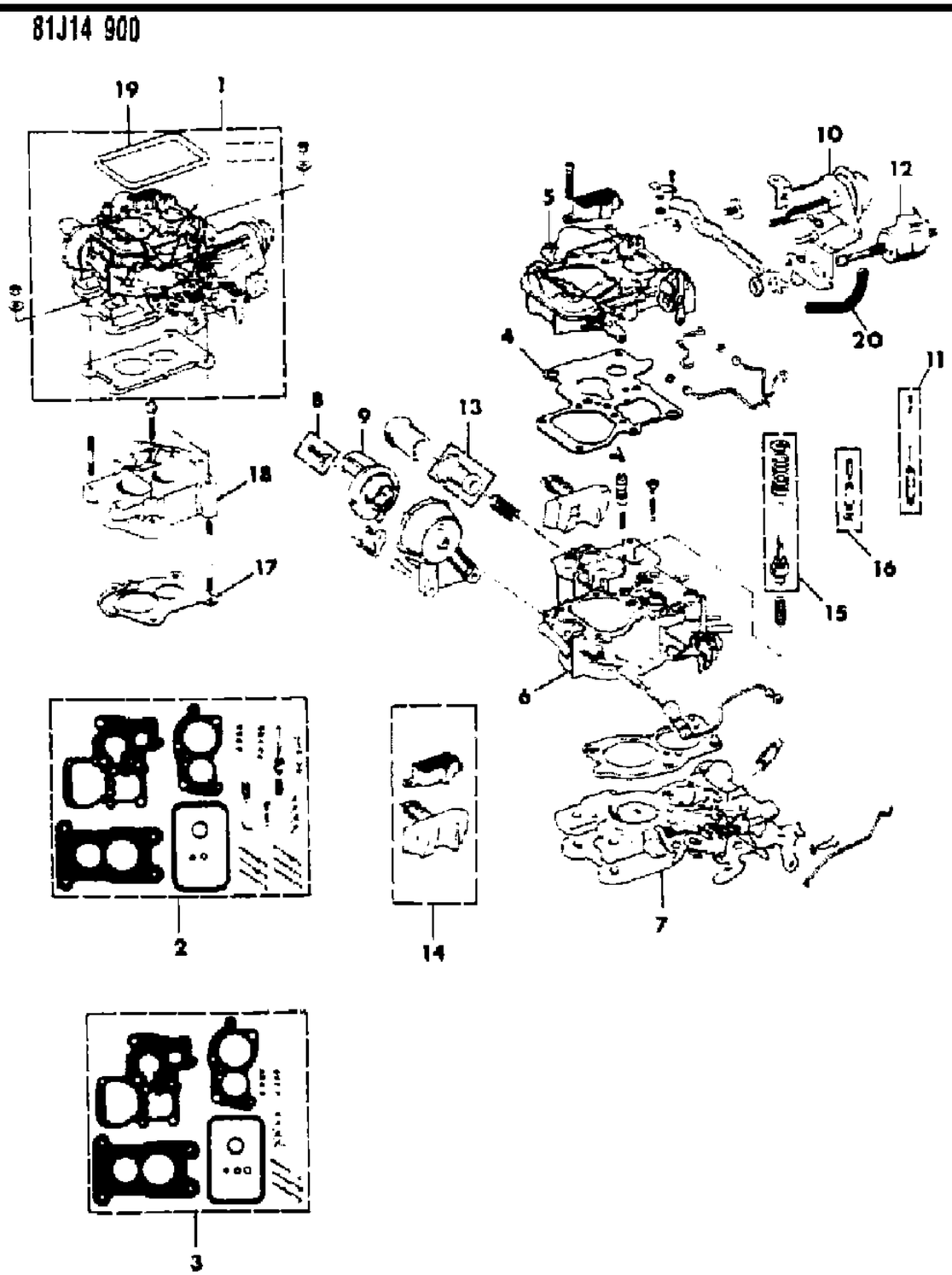

ITEM	PART NUMBER	QTY	BODY	MODEL	DESCRIPTION
1					CARBURETOR
	J323 8910	1			1981: With Automatic Transmission, with Carburetor Tagged 1790
	J323 8911	1			1981: With Manual Transmission, with Carburetor Tagged 1791
	J324 0774	1			1981: CANADA, EXPORT, with Carburetor Tagged 1799
	J324 1118	1			1982-83: With Manual Transmission, Carburetor Tagged 2380
2					REPAIR PACKAGE, Carburetor
	J813 2778	1			1981: With Carburetor Tagged 1790, 1791, 1799
	J813 3978	1			1982-83: With Carburetor Tagged 2380
3					GASKET PACKAGE, Carburetor
	J813 3470	1			1981: With Carburetor Tagged 1790, 1791, 1799
	J813 3980	1			1982-83: With Carburetor Tagged 2380
4	J813 3471	1			GASKET
5					AIR HORN PACKAGE ***
	J813 3472	1			1981: With Carburetor Tagged 1790
	J813 3483	1			1981: With Carburetor Tagged 1791
	J813 3849	1			1981: With Carburetor Tagged 1799
	J813 3983	1			1982-83: With Carburetor Tagged 2380
6					BOWL, Float ***
	J813 3473	1			1981: With Carburetor Tagged 1790
	J813 3484	1			1981: With Carburetor Tagged 1791
	J813 3850	1			1981: With Carburetor Tagged 1799
	J813 3986	1			1982-83: With Carburetor Tagged 2380
7					BODY, Throttle
	J813 3474	1			1981: With Carburetor Tagged 1790
	J813 3485	1			1981: With Carburetor Tagged 1791
	J813 3485	1			1981: With Carburetor Tagged 1799
	J813 3989	1			1982-83: With Carburetor Tagged 2380
8	J813 3476	1			RETAINER PACKAGE
9					COIL, Carburetor Choke ***
	J813 3477	1			1981: With Carburetor Tagged 1790, 1791
	J813 3477	1			1981: With Carburetor Tagged 1799
	J813 3992	1			1982-83: With Carburetor Tagged 2380
10					BRACKET, Vacuum
	J813 3478	1			1981: With Carburetor Tagged 1790, 1791
	J813 3478	1			1981: With Carburetor Tagged 1799
	J813 3993	1			1982-83: With Carburetor Tagged 2380
11					JET PACKAGE, Metering ***
	J813 3479	1			1981: With Carburetor Tagged 1790

MODEL CODES

16=Cherokee 2 Dr.(1981-83)
17=Cherokee 2 Dr.(1981-83)
73=Cherokee 2WD-2 Dr.(1984-86)
74=Cherokee 2WD-4 Dr.(1984-86)
18=Cherokee 4 Dr.(1981-83)
77=Cherokee 4WD-2 Dr.(1984-86)
78=Cherokee 4WD-4 Dr.(1984-86)
85=CJ-5 (1981-83)
86=CJ-6(1981)
87=CJ-7(1981-86)
88=CJ-8, Scrambler(1981-86)
64=Comanche 2WD-6 Ft. Box(1986)
66=Comanche 2WD-7 Ft. Box(1986)
63=Comanche 4WD-6 Ft. Box(1986)
65=Comanche 4WD-7 Ft. Box(1986)
15=Grand Wagoneer 4 Dr.(1984-86)
25=J-10 Truck 7 Ft. Box(1981-84)
26=J10 Truck 8 Ft. Box(1981-86)
27=J-20 Truck 8 Ft. Box(1981-86)
15=Wagoneer 4 Dr.(1981-83)
75=Wagoneer 4WD-4 Dr.(1984-86)

BODY
CJ=CJ-5, CJ-6, CJ-7, CJ-8, Scrambler(1981-86)
MJ=Comanche Pickup(1986)

STYLES
SJ=Wagoneer(1981-83), Grand Wagoneer(1984-86), Cherokee(1981-83), J-10, J-20(1981-86)
XJ=Wagoneer(1984-86), Cherokee(1984-86)

AR = Use as Required - = Non Illustrated Part P.A.R. = Paint as Required

« RETURN TO GROUP INDEX »

CARBURETOR AND COMPONENT PARTS 1981-83 GM FOUR CYLINDER, US 49-STATES CJ-5,6,7,8, SCRAMBLER
Figure 14-900

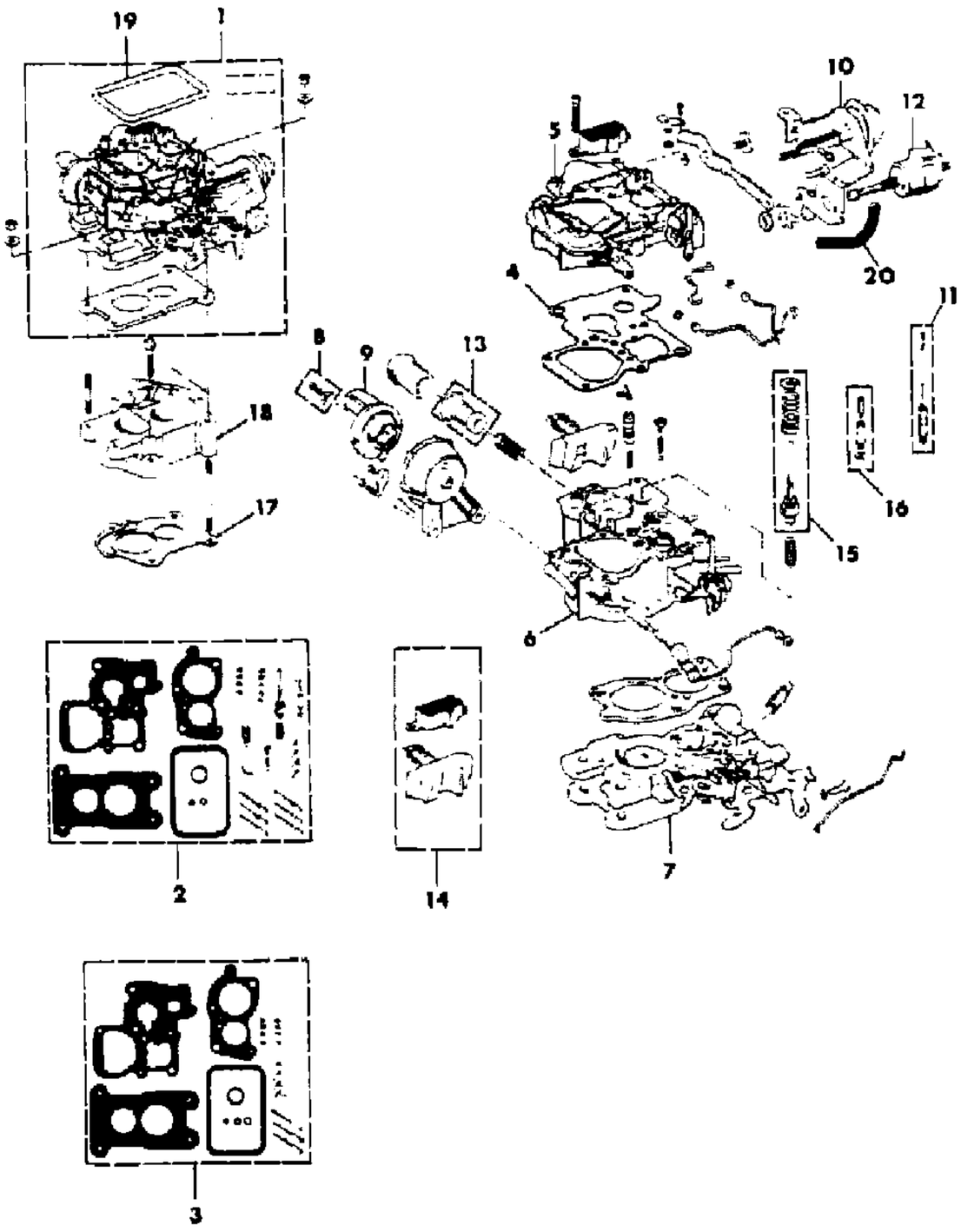

ITEM	PART NUMBER	QTY	BODY	MODEL	DESCRIPTION
	J813 3486	1			1981: With Carburetor Tagged 1791
	J813 3851	1			1981: With Carburetor Tagged 1799
	J813 3996	1			1982-83: With Carburetor Tagged 2380
12	J813 3480	1			SOLENOID, Idle Stop
13	J813 3481	1			FILTER, Fuel
14	J813 3482	1			FLOAT PACKAGE, Carburetor ***
15	J813 2737	1			PUMP ASSY ***
16	J813 2728	1			NEEDLE, Incl. Seat ***
17	J813 2355	1			GASKET
18					ADAPTER
	J813 2356	1			1981
	J813 2869	1			1982-83
19	J813 2330	1			GASKET, Air Cleaner
20	J812 5812	AR			HOSE, Bulk

MODEL CODES

16=Cherokee 2 Dr.(1981-83)
17=Cherokee 2 Dr.(1981-83)
73=Cherokee 2WD-2 Dr.(1984-86)
74=Cherokee 2WD-4 Dr.(1984-86)
18=Cherokee 4 Dr.(1981-83)
77=Cherokee 4WD-2 Dr.(1984-86)
78=Cherokee 4WD-4 Dr.(1984-86)
85=CJ-5 (1981-83)
86=CJ-6(1981)
87=CJ-7(1981-86)
88=CJ-8, Scrambler(1981-86)
64=Comanche 2WD-6 Ft. Box(1986)
66=Comanche 2WD-7 Ft. Box(1986)
63=Comanche 4WD-6 Ft. Box(1986)
65=Comanche 4WD-7 Ft. Box(1986)
15=Grand Wagoneer 4 Dr.(1984-86)
25=J-10 Truck 7 Ft. Box(1981-84)
26=J10 Truck 8 Ft. Box(1981-86)
27=J-20 Truck 8 Ft. Box(1981-86)
15=Wagoneer 4 Dr.(1981-83)
75=Wagoneer 4WD-4 Dr.(1984-86)

BODY
CJ=CJ-5, CJ-6, CJ-7, CJ-8, Scrambler(1981-86)
MJ=Comanche Pickup(1986)

STYLES
SJ=Wagoneer(1981-83), Grand Wagoneer(1984-86), Cherokee(1981-83), J-10, J-20(1981-86)
XJ=Wagoneer(1984-86), Cherokee(1984-86)

AR = Use as Required - = Non Illustrated Part P.A.R. = Paint as Required

« RETURN TO GROUP INDEX

CARBURETOR AND COMPONENT PARTS 1981-83 GM FOUR CYLINDER, US-CALIFORNIA
Figure 14-1000

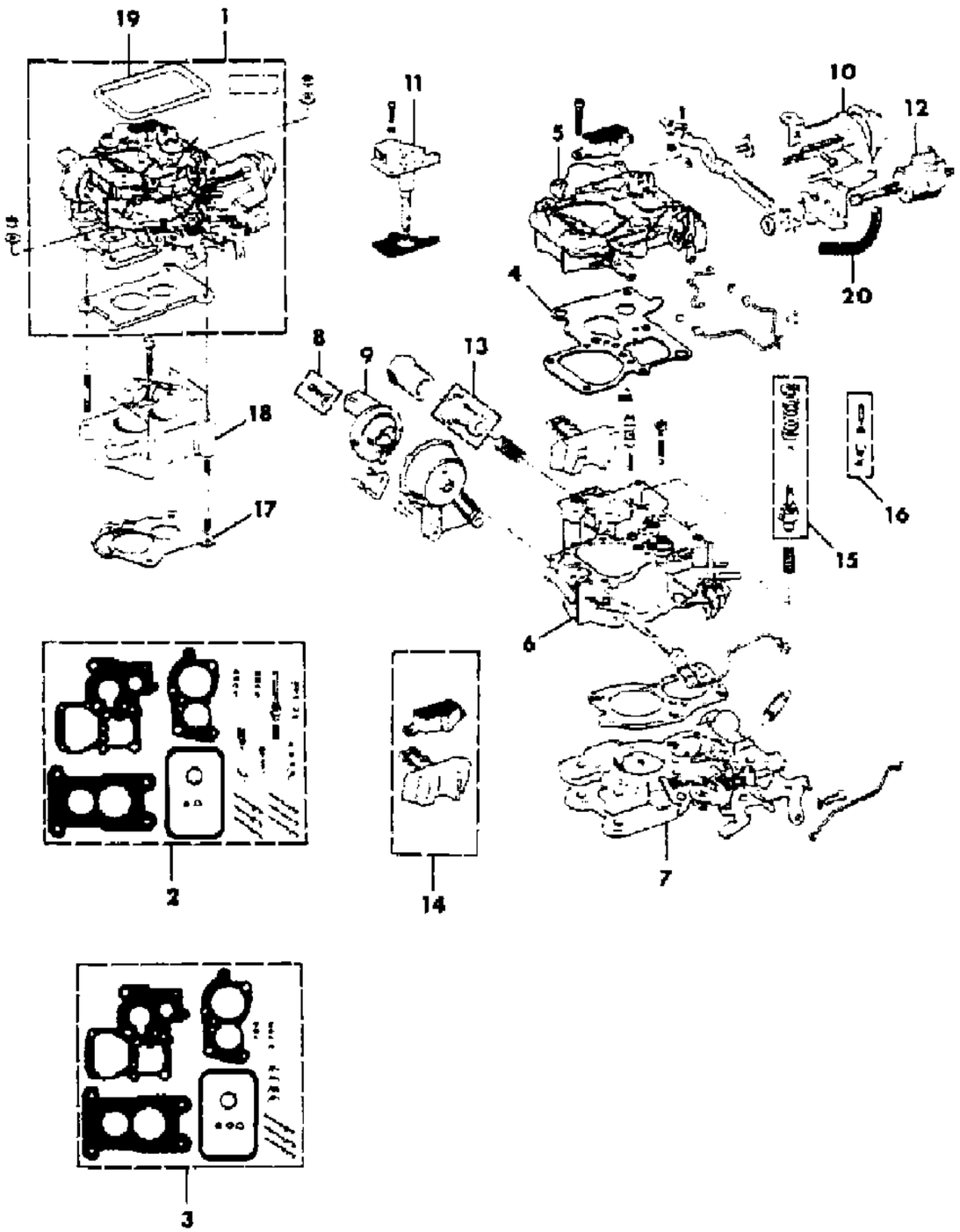

ITEM	PART NUMBER	QTY	BODY	MODEL	DESCRIPTION
1					CARBURETOR
	J323 9543	1			1981: With Manual Transmission, with Carburetor Tagged 1796
	J323 9544	1			1981: With Automatic Transmission, with Carburetor Tagged 1797
	J324 2123	1			1982: With Manual Transmission, with Carburetor Tagged 2389
	3300 0601	1			1983: With Manual Transmission, with Carburetor Tagged 3385
2	J813 3488	1			REPAIR PACKAGE, Carburetor
3	J813 3490	1			GASKET PACKAGE, Carburetor
4	J813 3491	1			GASKET
5					AIR HORN PACKAGE ***
	J813 3495	1			1981: With Carburetor Tagged 1796, 1797
	J813 4329	1			1982: With Carburetor Tagged 2389
	J813 4329	1			1983: With Carburetor Tagged 3385
6					BOWL, Float ***
	J813 3499	1			1981: With Carburetor Tagged 1796
	J813 3500	1			1981: With Carburetor Tagged 1797
	J813 4317	1			1982: With Carburetor Tagged 2389
7					BODY, Throttle
	J813 3501	1			1981: With Carburetor Tagged 1796
	J813 3502	1			1981: With Carburetor Tagged 1797
	J813 4229	1			1982-83: With Carburetor Tagged 2389, 3385
8	J813 3476				RETAINER PACKAGE
9					COIL, Carburetor Choke ***
	J813 3477	1			1981: With Carburetor Tagged 1796, 1797
	J813 4227	1			1982: With Carburetor Tagged 2389
10					BRACKET, Vacuum
	J813 3478	1			1981: With Carburetor Tagged 1796, 1797
	J813 3993	1			1982: With Carburetor Tagged 2389
11	J813 3504	1			SOLENOID, Mixture Control
12	J813 3480	1			SOLENOID, Idle Stop
13	J813 3481	1			FILTER, Fuel
14	J813 3507	1			FLOAT PACKAGE ***
15	J813 2737	1			PUMP ASSY ***
16	J813 2728	1			NEEDLE, Incl. Seat ***
17	J813 2355	1			GASKET
18					ADAPTER
	J813 2354	1			1981
	J813 2870	1			1982-83
19	J813 2330	1			GASKET, Air Cleaner

MODEL CODES

16=Cherokee 2 Dr.(1981-83)
17=Cherokee 2 Dr.(1981-83)
73=Cherokee 2WD-2 Dr.(1984-86)
74=Cherokee 2WD-4 Dr.(1984-86)
18=Cherokee 4 Dr.(1981-83)
77=Cherokee 4WD-2 Dr.(1984-86)
78=Cherokee 4WD-4 Dr.(1984-86)
85=CJ-5 (1981-83)
86=CJ-6(1981)
87=CJ-7(1981-86)
88=CJ-8, Scrambler(1981-86)
64=Comanche 2WD-6 Ft. Box(1986)
66=Comanche 2WD-7 Ft. Box(1986)
63=Comanche 4WD-6 Ft. Box(1986)
65=Comanche 4WD-7 Ft. Box(1986)
15=Grand Wagoneer 4 Dr.(1984-86)
25=J-10 Truck 7 Ft. Box(1981-84)
26=J10 Truck 8 Ft. Box(1981-86)
27=J-20 Truck 8 Ft. Box(1981-86)
15=Wagoneer 4 Dr.(1981-83)
75=Wagoneer 4WD-4 Dr.(1984-86)

BODY
CJ=CJ-5, CJ-6, CJ-7, CJ-8, Scrambler(1981-86)
MJ=Comanche Pickup(1986)

STYLES
SJ=Wagoneer(1981-83), Grand Wagoneer(1984-86), Cherokee(1981-83), J-10, J-20(1981-86)
XJ=Wagoneer(1984-86), Cherokee(1984-86)

AR = Use as Required - = Non Illustrated Part P.A.R. = Paint as Required

« RETURN TO GROUP INDEX »

CARBURETOR AND COMPONENT PARTS 1981-83 GM FOUR CYLINDER, US-CALIFORNIA
Figure 14-1000

81J14 1000 A

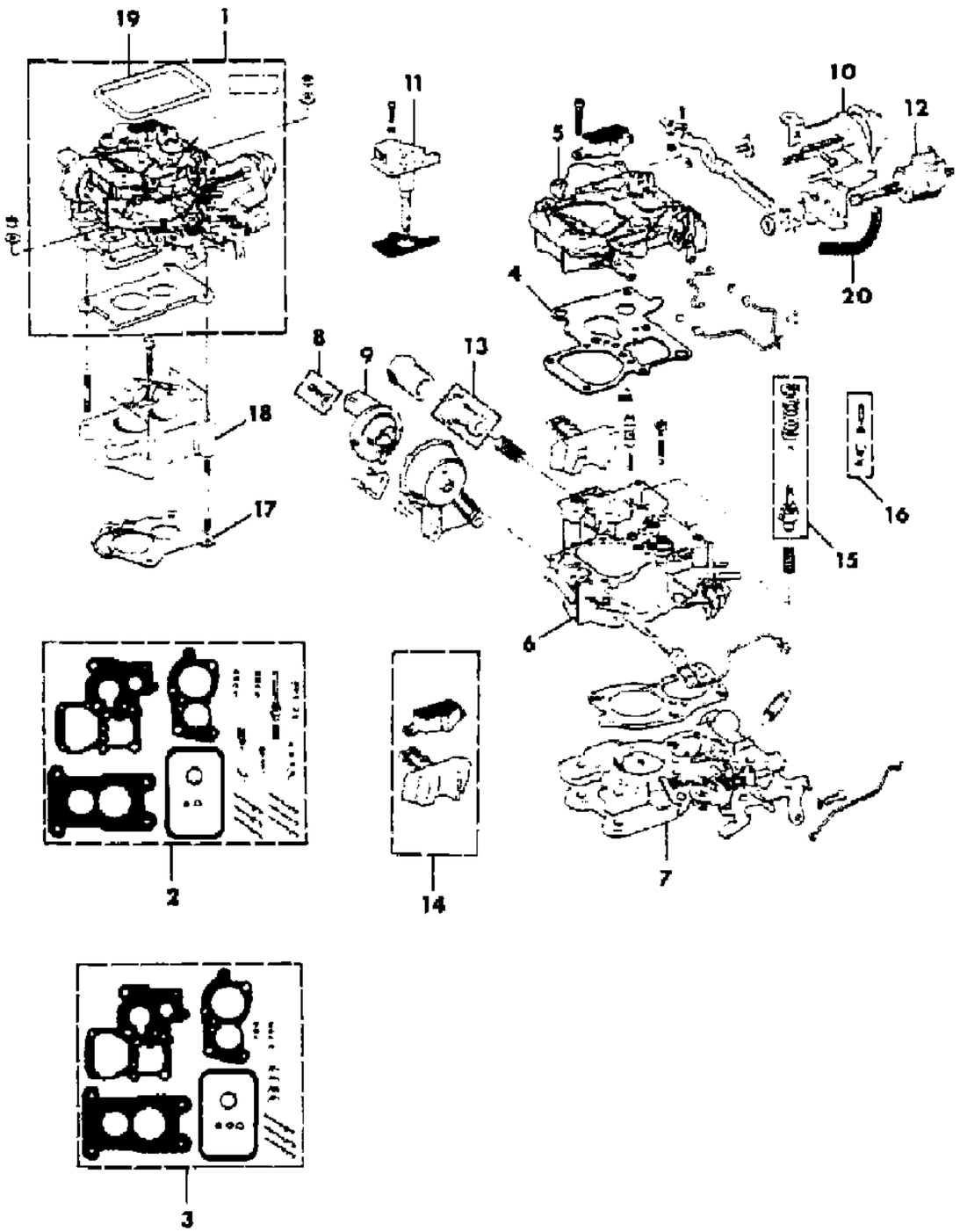

ITEM	PART NUMBER	QTY	BODY	MODEL	DESCRIPTION
20	J812 5812	AR			HOSE, Bulk

MODEL CODES

16=Cherokee 2 Dr.(1981-83)	78=Cherokee 4WD-4 Dr.(1984-86)	64=Comanche 2WD-6 Ft. Box(1986)	25=J-10 Truck 7 Ft. Box(1981-84)
17=Cherokee 2 Dr.(1981-83)	85=CJ-5 (1981-83)	66=Comanche 2WD-7 Ft. Box(1986)	26=J10 Truck 8 Ft. Box(1981-86)
73=Cherokee 2WD-2 Dr.(1984-86)	86=CJ-6(1981)	63=Comanche 4WD-6 Ft. Box(1986)	27=J-20 Truck 8 Ft. Box(1981-86)
74=Cherokee 2WD-4 Dr.(1984-86)	87=CJ-7(1981-86)	65=Comanche 4WD-7 Ft. Box(1986)	15=Wagoneer 4 Dr.(1981-83)
18=Cherokee 4 Dr.(1981-83)	88=CJ-8, Scrambler(1981-86)	15=Grand Wagoneer 4 Dr.(1984-86)	75=Wagoneer 4WD-4 Dr.(1984-86)
77=Cherokee 4WD-2 Dr.(1984-86)			

BODY
CJ=CJ-5, CJ-6, CJ-7, CJ-8, Scrambler(1981-86)
MJ=Comanche Pickup(1986)

STYLES
SJ=Wagoneer(1981-83), Grand Wagoneer(1984-86), Cherokee(1981-83), J-10, J-20(1981-86)
XJ=Wagoneer(1984-86), Cherokee(1984-86)

AR = Use as Required - = Non Illustrated Part P.A.R. = Paint as Required

« RETURN TO GROUP INDEX

CARBURETOR AND COMPONENT PARTS 1983-86 AMC FOUR CYLINDER CJ-5,7,8, SCRAMBLER
Figure 14-1100

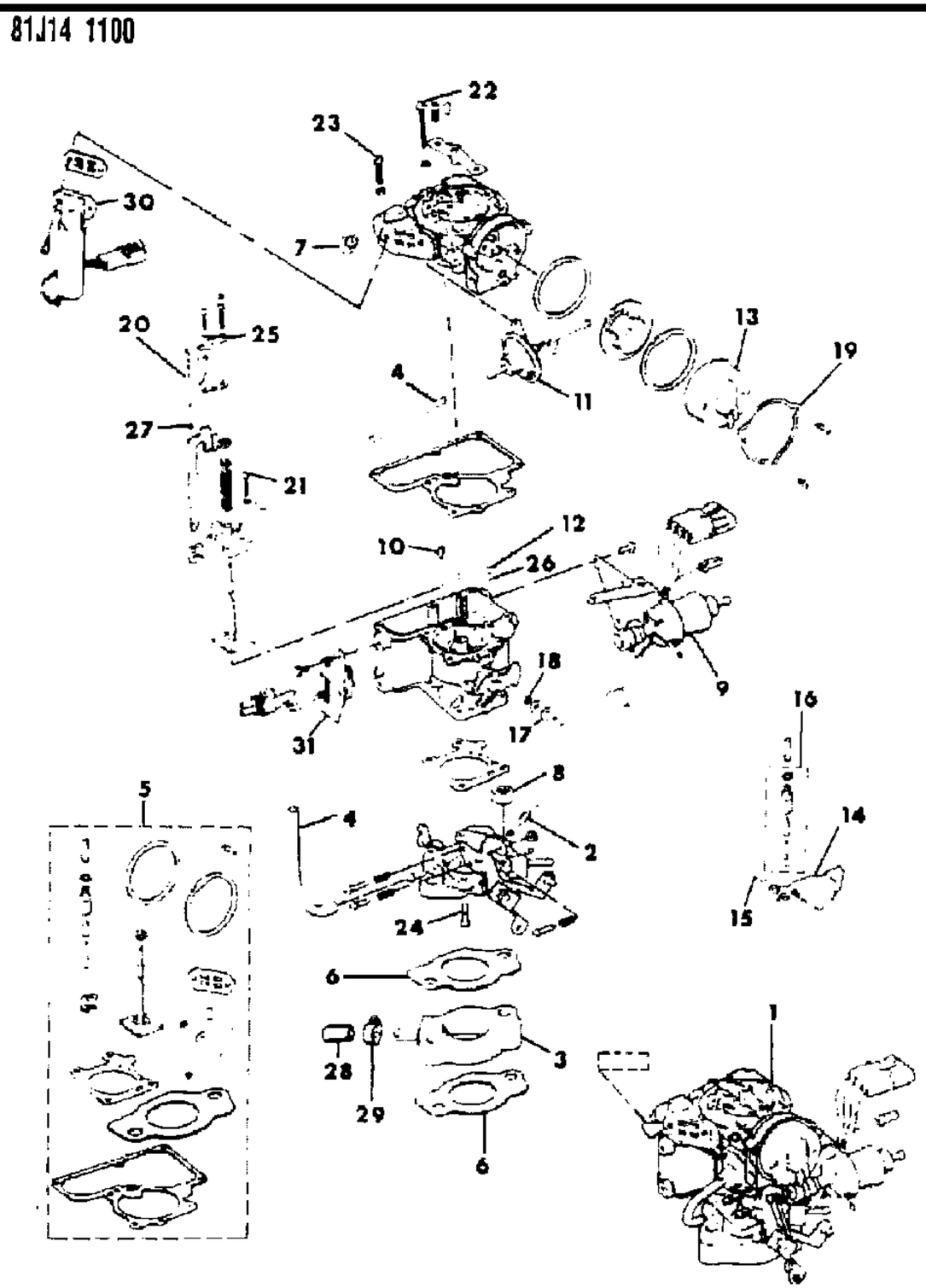

ITEM	PART NUMBER	QTY	BODY	MODEL	DESCRIPTION
1					CARBURETOR
	5300 0651	1			1983: US 49-States, Tagged 7453S
	5300 0653	1			1983: US California, High Altitude, Tagged 7455S
	3300 2115	1			1984: Without High Altitude, Tagged 7700S
	3300 2117	1			1984: With High Altitude, Tagged 7702S
	5300 2637	1			1985-86: Without High Altitude, Tagged 7704S
	5300 2639	1			1985-86: With High Altitude, Tagged 7706S
	5300 2641	1			1985-86: EXPORT, Non-Regulated Markets, with Manual Transmission, Tagged 7708S
2	8350 0455	1			SCREW, Idle Mixture
3	5300 0616	1			INSULATOR, Carburetor
4	J812 5812	AR			HOSE, Bulk
5	8350 0453	1			REPAIR PACKAGE, Carburetor
6	5300 0617	2			GASKET, Carburetor
7	J013 7406	1			CONNECTOR
8	J012 4925	2			NUT
9					SOLENOID, Throttle
	8350 0466	1			1983-86: With Carburetor Tagged 7453S, 7455S, 7700S, 7702S, 7704S, 7706S
	8350 2116	1			1985-86: With Carburetor Tagged 7708S
10					JET, Low Speed
	8350 0928	1			1983-86: With Carburetor Tagged 7453S, 7455S, 7700S, 7704S, 7706S
	8350 0929	1			1984: With Carburetor Tagged 7702S
	8350 2113	1			1985-86: With Carburetor Tagged 7708S
11					DIAPHRAGM, Choke
	8350 0464	1			1983: With Carburetor Tagged 7453S, 7455S
	8350 0923	1			1984: With Carburetor Tagged 7700S, 7702S
	8350 2112	1			1985-86: With Carburetor Tagged 7704S, 7706S, 7708S
12	J812 0149	1			WEIGHT ***
13					COIL, Carburetor Choke ***
	8350 0462	1			1983: With Carburetor Tagged 7453S, 7455S
	8350 0921	1			1984-86: With Carburetor Tagged 7700S, 7704S, 7708S
	8350 0927	1			1984-86: With Carburetor Tagged 7702S, 7706S
14	8350 0454	1			FLOAT, Carburetor
15	J812 4315	1			PIN, Float
16	8350 0932	1			NEEDLE, Incl. Seat ***
17	8350 0456	1			BUSHING, Choke Rod
18	J812 1249	1			CLIP

MODEL CODES

16=Cherokee 2 Dr.(1981-83)	78=Cherokee 4WD-4 Dr.(1984-86)	64=Comanche 2WD-6 Ft. Box(1986)	25=J-10 Truck 7 Ft. Box(1981-84)
17=Cherokee 2 Dr.(1981-83)	85=CJ-5 (1981-83)	66=Comanche 2WD-7 Ft. Box(1986)	26=J10 Truck 8 Ft. Box(1981-86)
73=Cherokee 2WD-2 Dr.(1984-86)	86=CJ-6(1981)	63=Comanche 4WD-6 Ft. Box(1986)	27=J-20 Truck 8 Ft. Box(1981-86)
74=Cherokee 2WD-4 Dr.(1984-86)	87=CJ-7(1981-86)	65=Comanche 4WD-7 Ft. Box(1986)	15=Wagoneer 4 Dr.(1981-83)
18=Cherokee 4 Dr.(1981-83)	88=CJ-8, Scrambler(1981-86)	15=Grand Wagoneer 4 Dr.(1984-86)	75=Wagoneer 4WD-4 Dr.(1984-86)
77=Cherokee 4WD-2 Dr.(1984-86)			

BODY
CJ=CJ-5, CJ-6, CJ-7, CJ-8, Scrambler(1981-86)
MJ=Comanche Pickup(1986)

STYLES
SJ=Wagoneer(1981-83), Grand Wagoneer(1984-86), Cherokee(1981-83), J-10, J-20(1981-86)
XJ=Wagoneer(1984-86), Cherokee(1984-86)

AR = Use as Required - = Non Illustrated Part P.A.R. = Paint as Required

« RETURN TO GROUP INDEX »

CARBURETOR AND COMPONENT PARTS 1983-86 AMC FOUR CYLINDER CJ-5,7,8, SCRAMBLER
Figure 14-1100

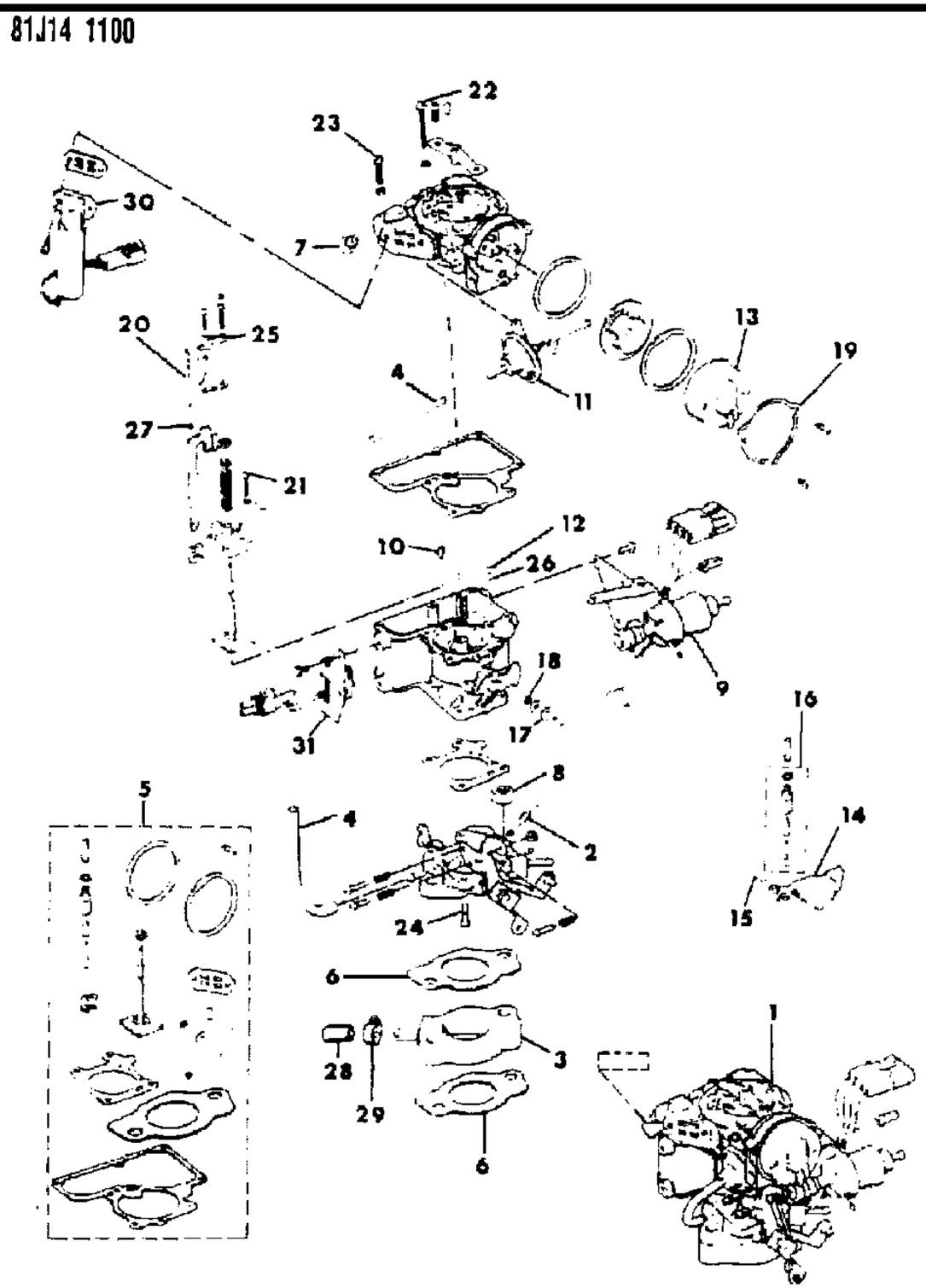

ITEM	PART NUMBER	QTY	BODY	MODEL	DESCRIPTION
19					RETAINER
	J812 6555	1			1983-84: With Carburetor Tagged 7453S, 7455S, 7700S
	8350 0931	1			1984-86: With Carburetor Tagged 7702S, 7704S, 7706S, 7708S
20					METERING ROD ***
	8350 0458	1			1983: With Carburetor Tagged 7455S
	8350 0459	1			1983-86: With Carburetor Tagged 7453S, 7700S, 7702S, 7704S, 7706S
	8350 2114	1			1985-86: With Carburetor Tagged 7708S
21	J320 6433	4			SCREW
22	J320 7738	3			SCREW
23	J812 5858	4			SCREW
24	J812 0222	4			SCREW
25	8350 0460	1			ARM, Metering Rod
26	J812 0145	1			BALL, Discharge Check
27					JET, Metering Rod
	8350 0469	1			1983: With Carburetor Tagged 7455S
	8350 0461	1			1983-86: With Carburetor Tagged 7453S, 7700S, 7702S, 7704S, 7706S
	8350 2115	1			1985-86: With Carburetor Tagged 7708S
28	J322 7272	1			CAP
29	3300 0785	1			CLAMP, Hose
30					SOLENOID
	8350 0465	1			1983: With Carburetor Tagged 7453S, 7455S
	8350 0919	1			1984-86: With Carburetor Tagged 7700S, 7702S, 7704S, 7706S
31					SENSOR
	8350 0463	1			1983: With Carburetor Tagged 7453S, 7455S
	8350 0922	1			1984-86: With Carburetor Tagged 7700S, 7702S, 7704S, 7706S

MODEL CODES

16=Cherokee 2 Dr.(1981-83)	78=Cherokee 4WD-4 Dr.(1984-86)	64=Comanche 2WD-6 Ft. Box(1986)	25=J-10 Truck 7 Ft. Box(1981-84)
17=Cherokee 2 Dr.(1981-83)	85=CJ-5 (1981-83)	66=Comanche 2WD-7 Ft. Box(1986)	26=J10 Truck 8 Ft. Box(1981-86)
73=Cherokee 2WD-2 Dr.(1984-86)	86=CJ-6(1981)	63=Comanche 4WD-6 Ft. Box(1986)	27=J-20 Truck 8 Ft. Box(1981-86)
74=Cherokee 2WD-4 Dr.(1984-86)	87=CJ-7(1981-86)	65=Comanche 4WD-7 Ft. Box(1986)	15=Wagoneer 4 Dr.(1981-83)
18=Cherokee 4 Dr.(1981-83)	88=CJ-8, Scrambler(1981-86)	15=Grand Wagoneer 4 Dr.(1984-86)	75=Wagoneer 4WD-4 Dr.(1984-86)
77=Cherokee 4WD-2 Dr.(1984-86)			

BODY
CJ=CJ-5, CJ-6, CJ-7, CJ-8, Scrambler(1981-86)
MJ=Comanche Pickup(1986)

STYLES
SJ=Wagoneer(1981-83), Grand Wagoneer(1984-86), Cherokee(1981-83), J-10, J-20(1981-86)
XJ=Wagoneer(1984-86), Cherokee(1984-86)

AR = Use as Required - = Non Illustrated Part P.A.R. = Paint as Required

« RETURN TO GROUP INDEX

CARBURETOR AND COMPONENT PARTS 1981-86 SIX CYLINDER CJ-5,6,7,8, SCRAMBLER
Figure 14-1200

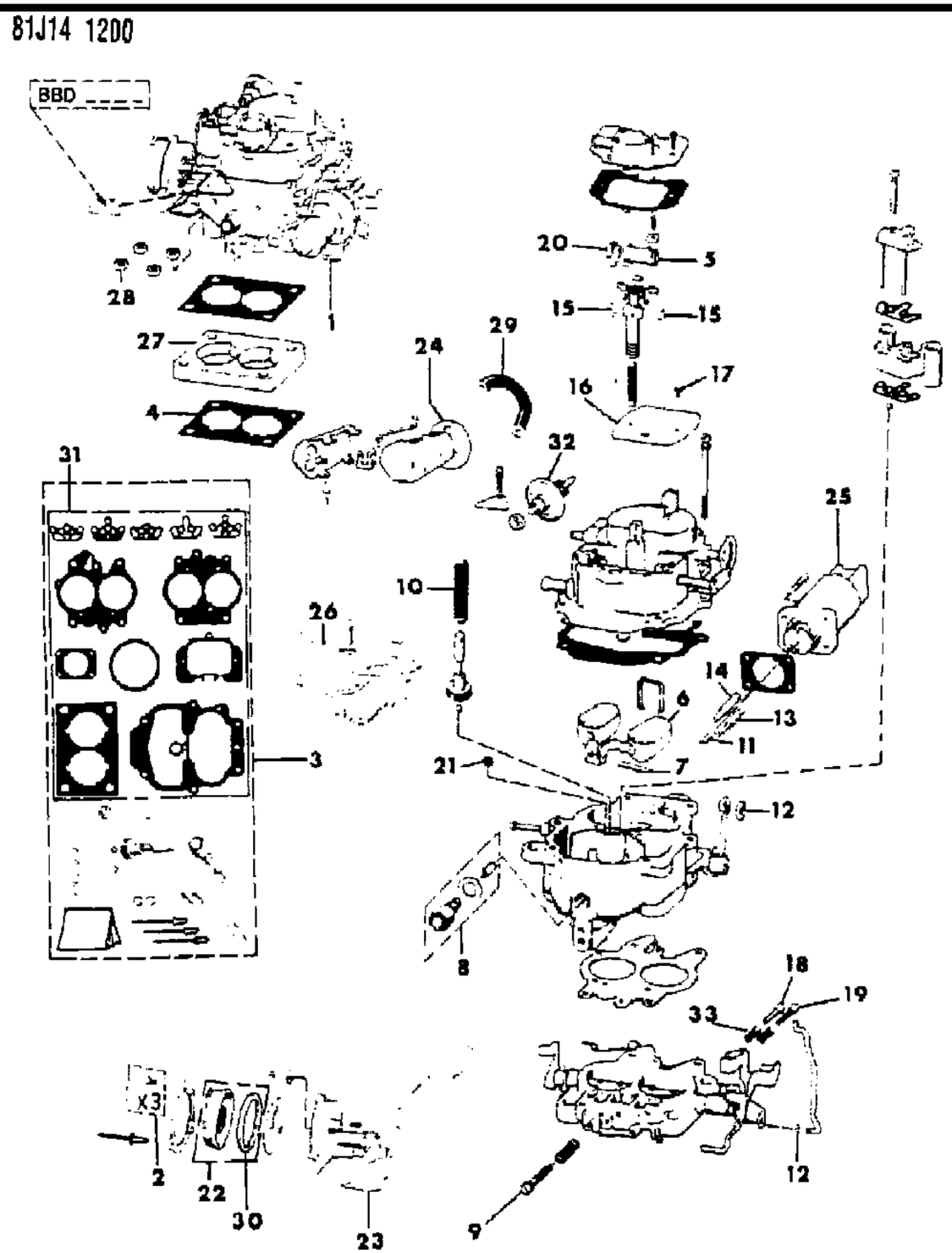

ITEM	PART NUMBER	QTY	BODY	MODEL	DESCRIPTION
1					CARBURETOR
	J323 8403	1			1981: Without US California, with Manual Transmission, Tagged 8309S
	J323 8299	1			1981: US California, with Manual Transmission, Tagged 8303S
	J323 8408	1			1981: Hilly Terrain, Tagged 8311S
	J324 0305	1			1981: CANADA, with Manual Transmission, Tagged 8335S
	J324 0305	1			1981: EXPORT, Economic Commission of Europe, Non-Regulated Markets, with Manual Transmission, Tagged 8335S
	J323 8402	1			1981: Without US California, with Automatic Transmission, Tagged 8308S
	J323 8298	1			1981: With US California, with Automatic Transmission, Tagged 8302S
	J324 0306	1			1981: CANADA, with Automatic Transmission, Tagged 8336S
	J324 0294	1		87	1981: EXPORT, Australian Design Rules, with Automatic Transmission, Tagged 8328S
	J324 0307	1		87,88	1981: EXPORT, Economic Commission of Europe, with Automatic Transmission, Tagged 8337S
	J324 0306	1		87,88	1981: EXPORT, Non-Regulated Markets, with Automatic Transmission, Tagged 8336S
	J323 5769	1			1981: EXPORT, Non-Regulated Markets, Tagged 8257S
	J324 1125	1			1982: Without US California, without Hilly Terrain, with Manual Transmission, Tagged 8349S
	J324 1129	1			1982: Without US California, with Hilly Terrain, with Manual Transmission, Tagged 8351S
	J324 1122	1			1982: With US California, with Manual Transmission, Tagged 8339S
	J324 1122	1		87	1982: Japan, with Manual Transmission, Tagged 8339S
	J324 2069	1		85,87,8	1982: EXPORT, Economic Commission of Europe, with Manual Transmission, Tagged 8357S
	J324 1125	1			1982: Without Hilly Terrain, with Automatic Transmission, Tagged 8349S
	J324 1129	1			1982: With Hilly Terrain, with Automatic Transmission, Tagged 8351S
	J324 1121	1			1982: With US California, with Automatic Transmission, Tagged 8338S
	J324 1121	1		87	1982: Japan, with Automatic Transmission, Tagged 8338S
	J324 2066	1		87	1982: EXPORT, Australian Design Rules, with Automatic Transmission, Tagged 8354S

MODEL CODES

16=Cherokee 2 Dr.(1981-83)
17=Cherokee 2 Dr.(1981-83)
73=Cherokee 2WD-2 Dr.(1984-86)
74=Cherokee 2WD-4 Dr.(1984-86)
18=Cherokee 4 Dr.(1981-83)
77=Cherokee 4WD-2 Dr.(1984-86)
78=Cherokee 4WD-4 Dr.(1984-86)
85=CJ-5 (1981-83)
86=CJ-6(1981)
87=CJ-7(1981-86)
88=CJ-8, Scrambler(1981-86)
64=Comanche 2WD-6 Ft. Box(1986)
66=Comanche 2WD-7 Ft. Box(1986)
63=Comanche 4WD-6 Ft. Box(1986)
65=Comanche 4WD-7 Ft. Box(1986)
15=Grand Wagoneer 4 Dr.(1984-86)
25=J-10 Truck 7 Ft. Box(1981-84)
26=J10 Truck 8 Ft. Box(1981-86)
27=J-20 Truck 8 Ft. Box(1981-86)
15=Wagoneer 4 Dr.(1981-83)
75=Wagoneer 4WD-4 Dr.(1984-86)

BODY
CJ=CJ-5, CJ-6, CJ-7, CJ-8, Scrambler(1981-86)
MJ=Comanche Pickup(1986)

STYLES
SJ=Wagoneer(1981-83), Grand Wagoneer(1984-86), Cherokee(1981-83), J-10, J-20(1981-86)
XJ=Wagoneer(1984-86), Cherokee(1984-86)

AR = Use as Required - = Non Illustrated Part P.A.R. = Paint as Required

CARBURETOR AND COMPONENT PARTS 1981-86 SIX CYLINDER CJ-5,6,7,8, SCRAMBLER
Figure 14-1200

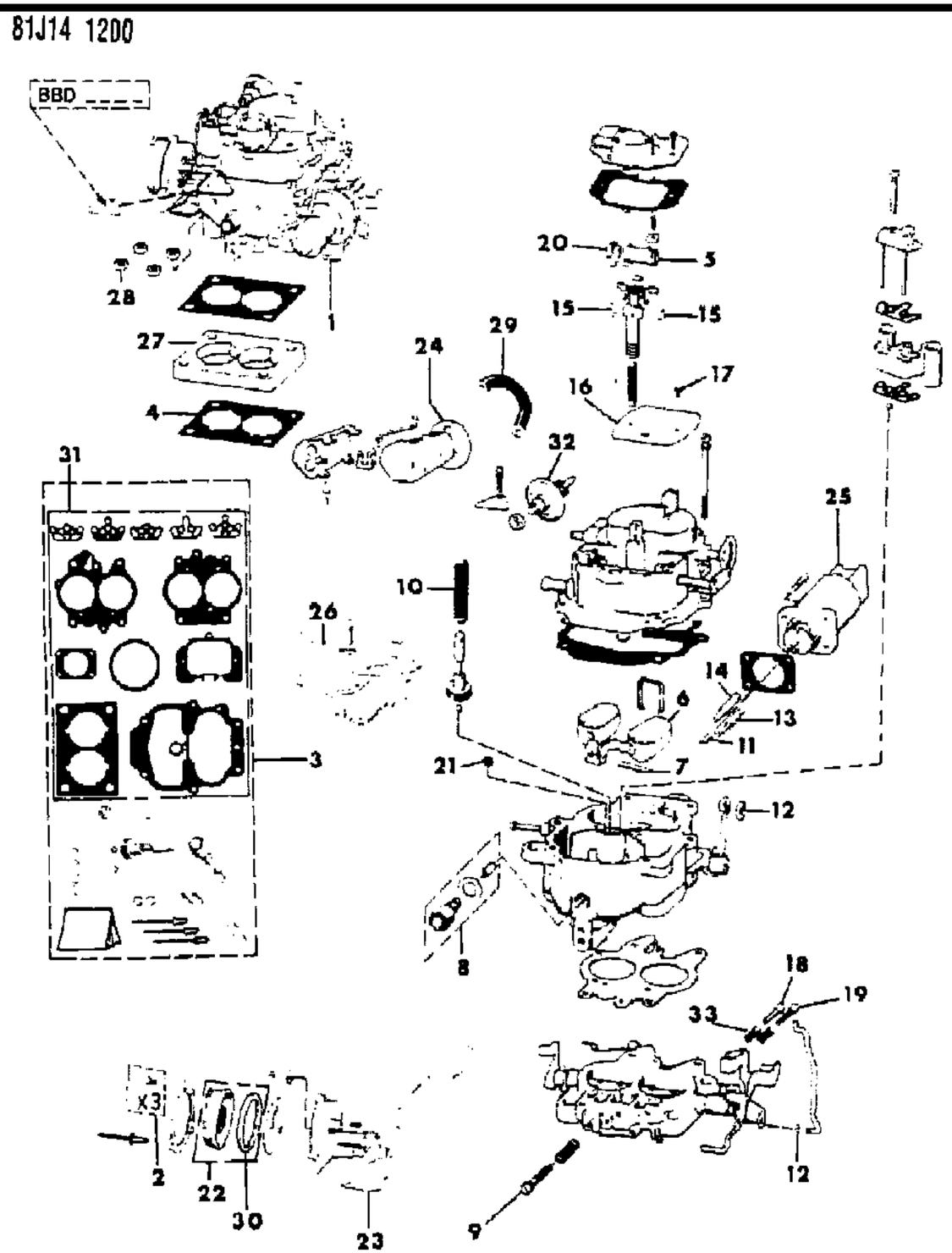

ITEM	PART NUMBER	QTY	BODY	MODEL	DESCRIPTION
	J324 2067	1		87,88	1982: EXPORT, Economic Commission of Europe, with Automatic Transmission, Tagged 8355S
	J805 1769	1			1982-84: EXPORT, Australian Design Rules, Economic Commission of Europe, VAM, Built in Mexico, Engine Build Code "M", Tagged 8372S
	3300 0469	1			1983: With Manual Transmission, Tagged 8364S
	3300 0483	1			1983: CANADA, with Manual Transmission, Tagged 8367S
	3300 0482	1			1983: Without US California, with Automatic Transmission, Tagged 8362S
	3300 0468	1			1983: With US California, with Automatic Transmission, Tagged 8360S
	J805 1769	1			1983-84: VAM, Built in Mexico, Engine Build Code "M", Non-Regulated Markets, Tagged 8372S
	3300 0469	1			1983-85: Japan, with Manual Transmission, Tagged 8364S
	3300 0468	1			1983-85: Japan, with Automatic Transmission, Tagged 8360S
	J324 2067	1		87,88	1983-85: EXPORT, Australian Design Rules, Tagged 8355S
	J324 2067	1			1983-85: EXPORT, Economic Commission of Europe, Tagged 8355S
	3300 0470	1			1983-85: EXPORT, Non-Regulated Markets, Tagged 8363S
	J324 2067	1			1983-85: EXPORT, Sweden, Switzerland, Tagged 8355S
	3300 1708	1			1984-86: With Manual Transmission, Tagged 8384S
	3300 1707	1			1984-86: With Automatic Transmission, Tagged 8383S
	J324 2067	1		87,88	1986: EXPORT, Economic Commission of Europe, Tagged 8355S
2					SCREW PACKAGE
3					REPAIR PACKAGE, Carburetor
	J813 4232	1			With Carburetor Tagged 8338S, 8339S, 8349S, 8351S, 8354S, 8355S, 8357S, 8360S, 8362S, 8363S, 8364S, 8367S, 8372S, 8383S, 8384S
	J813 3460	1			With Carburetor Tagged 8302S, 8303S, 8308S, 8309S, 8311S
	J812 7315	1			With Carburetor Tagged 8328S
	J813 2617	1			With Carburetor Tagged 8236, 8257S, 8335S, 8337
4	J323 5405	2			GASKET
5	J812 7319	1			ARM, Metering Rod
6	J812 7325	1			FLOAT, Carburetor
7	J812 4315	1			PIN, Float
8	J812 7326	1			NEEDLE, Incl. Seat ***
9	J813 3451	2			SCREW, Idle Mixture
10	J812 7324	1			SPRING, Pump

MODEL CODES

16=Cherokee 2 Dr.(1981-83)	78=Cherokee 4WD-4 Dr.(1984-86)	64=Comanche 2WD-6 Ft. Box(1986)	25=J-10 Truck 7 Ft. Box(1981-84)
17=Cherokee 2 Dr.(1981-83)	85=CJ-5 (1981-83)	66=Comanche 2WD-7 Ft. Box(1986)	26=J10 Truck 8 Ft. Box(1981-86)
73=Cherokee 2WD-2 Dr.(1984-86)	86=CJ-6(1981)	63=Comanche 4WD-6 Ft. Box(1986)	27=J-20 Truck 8 Ft. Box(1981-86)
74=Cherokee 2WD-4 Dr.(1984-86)	87=CJ-7(1981-86)	65=Comanche 4WD-7 Ft. Box(1986)	15=Wagoneer 4 Dr.(1981-83)
18=Cherokee 4 Dr.(1981-83)	88=CJ-8, Scrambler(1981-86)	15=Grand Wagoneer 4 Dr.(1984-86)	75=Wagoneer 4WD-4 Dr.(1984-86)
77=Cherokee 4WD-2 Dr.(1984-86)			

BODY
CJ=CJ-5, CJ-6, CJ-7, CJ-8, Scrambler(1981-86)
MJ=Comanche Pickup(1986)

STYLES
SJ=Wagoneer(1981-83), Grand Wagoneer(1984-86), Cherokee(1981-83), J-10, J-20(1981-86)
XJ=Wagoneer(1984-86), Cherokee(1984-86)

AR = Use as Required - = Non Illustrated Part P.A.R. = Paint as Required

CARBURETOR AND COMPONENT PARTS 1981-86 SIX CYLINDER CJ-5,6,7,8, SCRAMBLER
Figure 14-1200

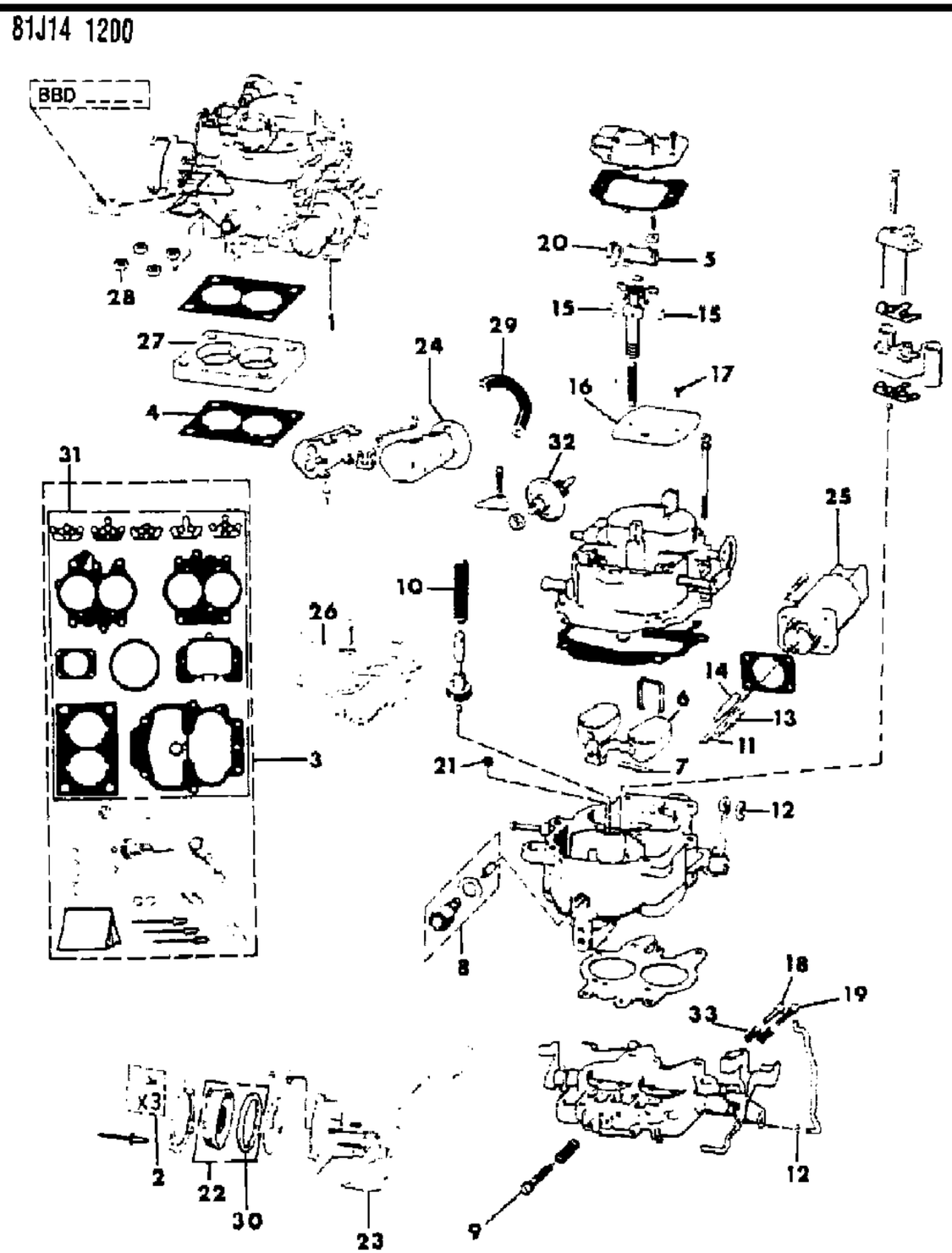

ITEM	PART NUMBER	QTY	BODY	MODEL	DESCRIPTION
11					SPRING, Actuator
	8350 0337	1			With Carburetor Tagged 8302S, 8303S, 8338S, 8339S, 8360S, 8362S, 8364S, 8367S, 8383S, 8384S
12	J812 1249	4			RETAINER
13					PIN, Metering
	J813 4235	1			With Carburetor Tagged 8338S, 8339S, 8360S, 8362S, 8364S, 8367S, 8383S, 8384S
	J813 3458	1			With Carburetor Tagged 8302S, 8303S
14					PIN, Metering
	J813 3702	1			With Carburetor Tagged 8302S, 8303S, 8338S, 8339S, 8360S, 8362S, 8364S, 8367S, 8383S, 8384S
15					ROD, Metering
	J813 3457	2			With Carburetor Tagged 8302S, 8303S
	J813 3949	2			With Carburetor Tagged 8338S, 8339S, 8383S, 8384S
	8350 0170	2			With Carburetor Tagged 8360S, 8362S, 8364S, 8367S
	J812 7816	2			With Carburetor Tagged 8337, 8355S, 8372S
	J813 2547	2			With Carburetor Tagged 8257S
	J813 3456	2			With Carburetor Tagged 8308S, 8236
	J813 2542	2			With Carburetor Tagged 8309S
	J813 3452	2			With Carburetor Tagged 8311S
	J813 3454	2			With Carburetor Tagged 8328S, 8351S, 8354S
	J813 3462	2			With Carburetor Tagged 8335S, 8349S, 8357S, 8363S
16	J812 7322	1			VALVE, Choke
17	J812 6130	2			SCREW, Choke Valve
18	J812 7330	1			SCREW, Idle Speed
19	J812 7329	1			SCREW, Fast Idle
20	J813 0220	1			ARM, Accelerator Pump
21					JET, Metering Rod
	J320 7756	2			With Carburetor Tagged 8302S, 8303S, 8338S, 8339S, 8360S, 8362S, 8364S, 8367S, 8383S, 8384S
	J094 8827	2			With Carburetor Tagged 8311S, 8328S, 8337, 8351S, 8354S, 8355S, 8372S
	J813 2543	2			With Carburetor Tagged 8236, 8257S, 8308S, 8309S, 8335S, 8349S, 8357S, 8363S
22					COVER PACKAGE ***
	J813 3453	1			With Carburetor Tagged 8302S, 8303S, 8311S, 8328S, 8351S
	J813 3455	1			With Carburetor Tagged 8308S, 8309S, 8338S, 8339S, 8349S, 8360S, 8362S, 8364S, 8367S, 8383S, 8384S
	J813 2545	1			With Carburetor Tagged 8337, 8355S, 8372S

MODEL CODES

16=Cherokee 2 Dr.(1981-83)	78=Cherokee 4WD-4 Dr.(1984-86)	64=Comanche 2WD-6 Ft. Box(1986)	25=J-10 Truck 7 Ft. Box(1981-84)
17=Cherokee 2 Dr.(1981-83)	85=CJ-5 (1981-83)	66=Comanche 2WD-7 Ft. Box(1986)	26=J10 Truck 8 Ft. Box(1981-86)
73=Cherokee 2WD-2 Dr.(1984-86)	86=CJ-6(1981)	63=Comanche 4WD-6 Ft. Box(1986)	27=J-20 Truck 8 Ft. Box(1981-86)
74=Cherokee 2WD-4 Dr.(1984-86)	87=CJ-7(1981-86)	65=Comanche 4WD-7 Ft. Box(1986)	15=Wagoneer 4 Dr.(1981-83)
18=Cherokee 4 Dr.(1981-83)	88=CJ-8, Scrambler(1981-86)	15=Grand Wagoneer 4 Dr.(1984-86)	75=Wagoneer 4WD-4 Dr.(1984-86)
77=Cherokee 4WD-2 Dr.(1984-86)			

BODY
CJ=CJ-5, CJ-6, CJ-7, CJ-8, Scrambler(1981-86)
MJ=Comanche Pickup(1986)

STYLES
SJ=Wagoneer(1981-83), Grand Wagoneer(1984-86), Cherokee(1981-83), J-10, J-20(1981-86)
XJ=Wagoneer(1984-86), Cherokee(1984-86)

AR = Use as Required - = Non Illustrated Part P.A.R. = Paint as Required

CARBURETOR AND COMPONENT PARTS 1981-86 SIX CYLINDER CJ-5,6,7,8, SCRAMBLER
Figure 14-1200

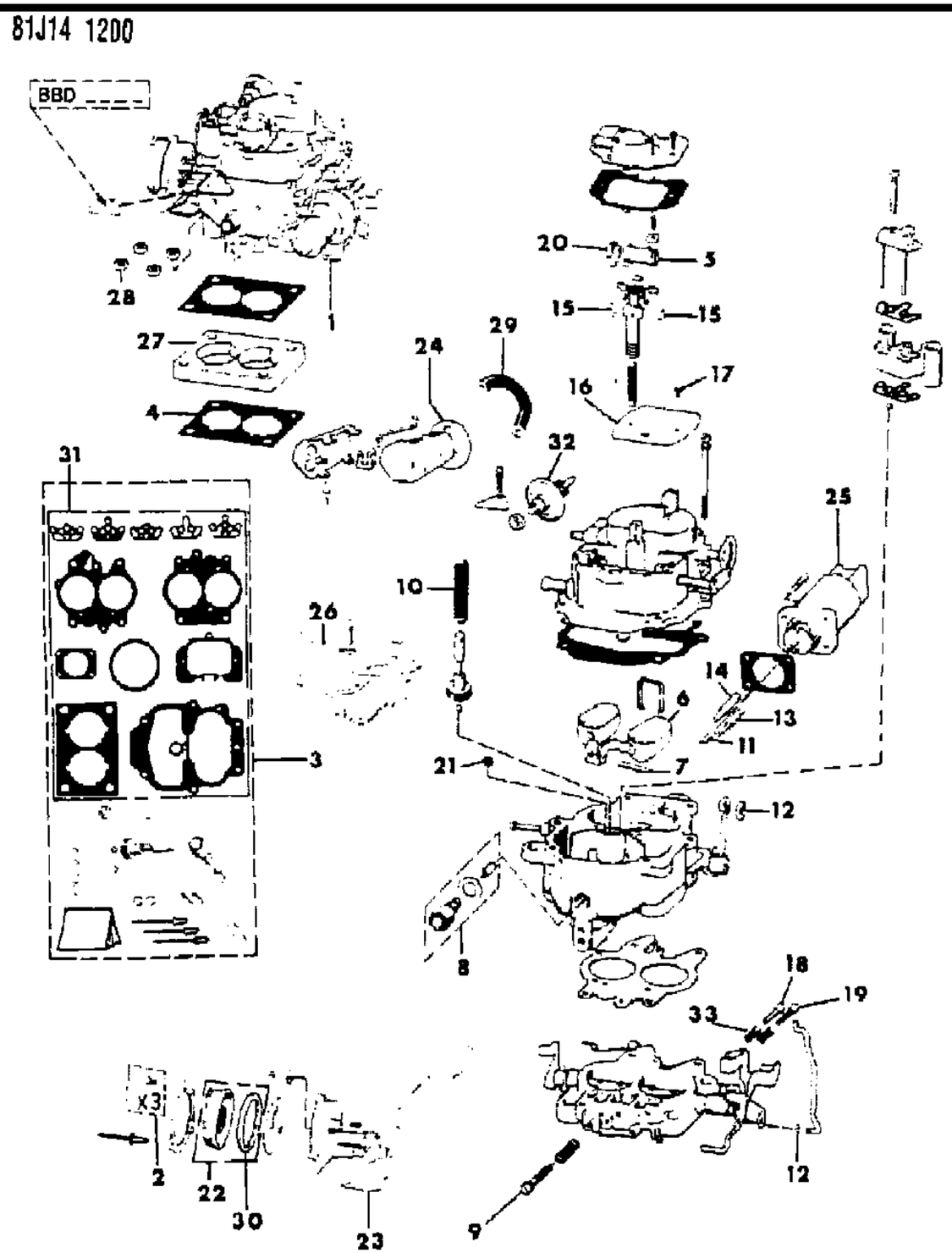

ITEM	PART NUMBER	QTY	BODY	MODEL	DESCRIPTION
	J813 2544	1			With Carburetor Tagged 8236, 8257S, 8335S, 8357S, 8363S
	J813 2548	1			With Carburetor Tagged 8354S
23					SWITCH, Wide Open Throttle
	J813 3767	1			With Carburetor Tagged 8302S, 8303S
	J813 3952	1			With Carburetor Tagged 8338S, 8339S, 8360S, 8362S, 8364S, 8367S, 8383S, 8384S
24					DIAPHRAGM
	J813 3461	1			With Carburetor Tagged 8302S, 8303S, 8308S, 8309S, 8311S, 8357S
	J813 2550	1			With Carburetor Tagged 8236, 8257S, 8328S, 8335S, 8337, 8338S, 8339S, 8349S, 8351S, 8354S, 8355S
	J813 4544	1			With Carburetor Tagged 8360S, 8362S, 8363S, 8364S, 8367S, 8383S, 8384S
25	J813 2632	1			MOTOR, Carburetor Stepper
26					SOLENOID, Idle
	J813 3465	1			With Carburetor Tagged 8302S, 8303S, 8308S, 8309S, 8311S, 8338S, 8339S, 8349S, 8351S, 8355S, 8357S
	8350 0171	1			With Carburetor Tagged 8360S, 8362S, 8364S, 8367S, 8383S, 8384S
	J812 7629	1			With Carburetor Tagged 8236, 8257S, 8328S, 8337, 8363S, 8372S
27	J323 5406	1			INSULATOR, Carburetor
28	J400 3825	4			NUT
29	J812 5812	AR			HOSE, Bulk
30					GASKET
	J813 0619	1			With Carburetor Tagged 8236, 8257S, 8302S, 8303S, 8308S, 8309S, 8311S, 8328S, 8335S, 8337, 8349S, 8351S, 8354S, 8355S, 8357S
	J813 3700	1			With Carburetor Tagged 8338S, 8339S, 8360S, 8362S, 8363S, 8364S, 8367S, 8383S, 8384S, 8372S
31					GASKET PACKAGE
	J813 2917	1			With Carburetor Tagged 8236, 8302S, 8303S, 8308S, 8309S, 8311S, 8328S, 8335S, 8337S, 8360S, 8362S, 8363S, 8364S, 8367S, 8372S
	J813 4233	1			With Carburetor Tagged 8338S, 8339S, 8349S, 8351S, 8354S, 8355S, 8357S
	J812 7316	1			With Carburetor Tagged 8257S
32	J812 7729	1			DASHPOT
33	J812 1248	2			SPRING

MODEL CODES

16=Cherokee 2 Dr.(1981-83)	78=Cherokee 4WD-4 Dr.(1984-86)	64=Comanche 2WD-6 Ft. Box(1986)	25=J-10 Truck 7 Ft. Box(1981-84)
17=Cherokee 2 Dr.(1981-83)	85=CJ-5 (1981-83)	66=Comanche 2WD-7 Ft. Box(1986)	26=J10 Truck 8 Ft. Box(1981-86)
73=Cherokee 2WD-2 Dr.(1984-86)	86=CJ-6(1981)	63=Comanche 4WD-6 Ft. Box(1986)	27=J-20 Truck 8 Ft. Box(1981-86)
74=Cherokee 2WD-4 Dr.(1984-86)	87=CJ-7(1981-86)	65=Comanche 4WD-7 Ft. Box(1986)	15=Wagoneer 4 Dr.(1981-83)
18=Cherokee 4 Dr.(1981-83)	88=CJ-8, Scrambler(1981-86)	15=Grand Wagoneer 4 Dr.(1984-86)	75=Wagoneer 4WD-4 Dr.(1984-86)
77=Cherokee 4WD-2 Dr.(1984-86)			

BODY
CJ=CJ-5, CJ-6, CJ-7, CJ-8, Scrambler(1981-86)
MJ=Comanche Pickup(1986)

STYLES
SJ=Wagoneer(1981-83), Grand Wagoneer(1984-86), Cherokee(1981-83), J-10, J-20(1981-86)
XJ=Wagoneer(1984-86), Cherokee(1984-86)

AR = Use as Required - = Non Illustrated Part P.A.R. = Paint as Required

« RETURN TO GROUP INDEX

CARBURETOR AND COMPONENT PARTS 1981 EIGHT CYLINDER CJ-5,6,7,8, SCRAMBLER
Figure 14-1300

81J14 1300

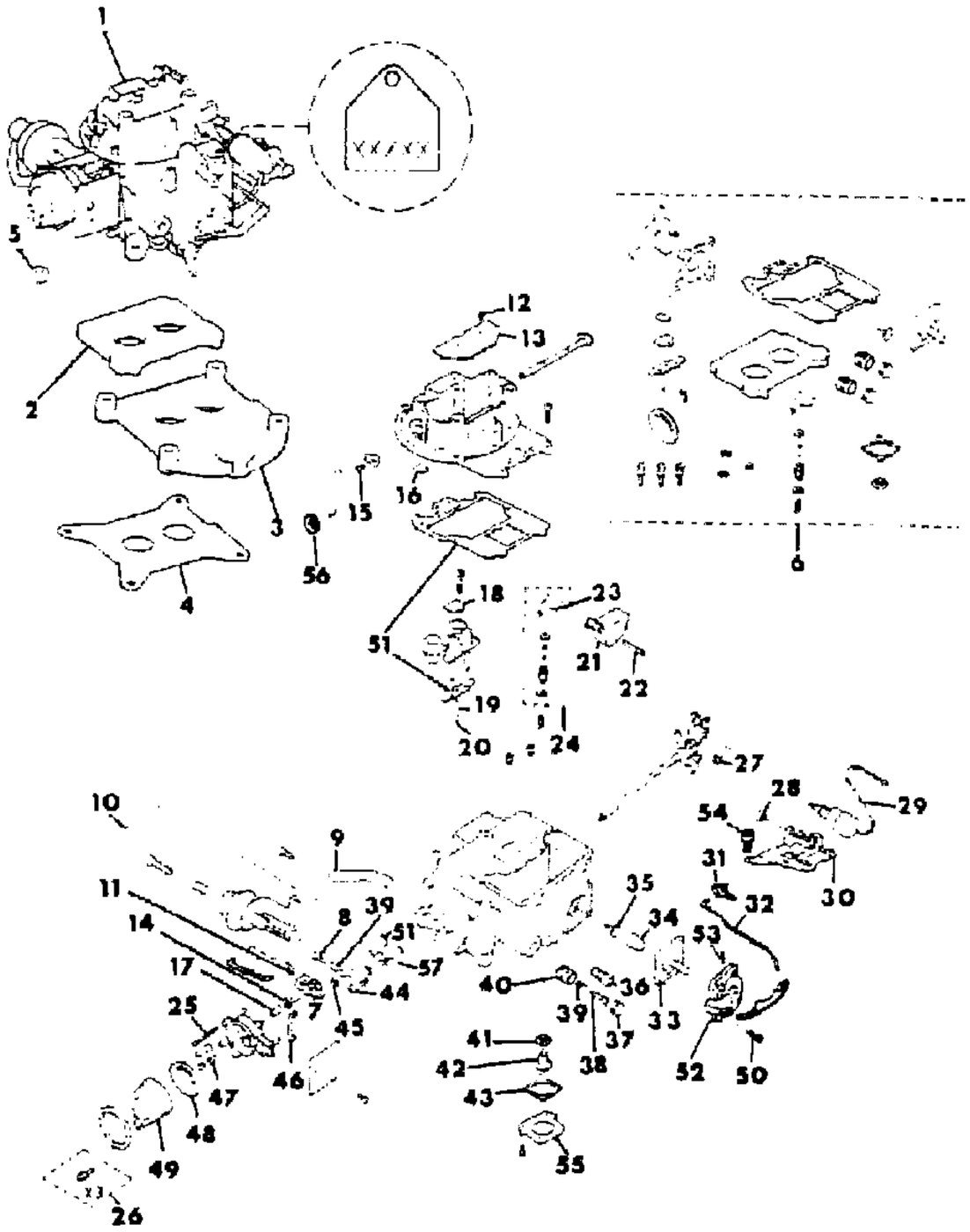

ITEM	PART NUMBER	QTY	BODY	MODEL	DESCRIPTION
1					CARBURETOR
	J323 8410	1			1981: Without US California, with Manual Transmission, Tagged 1DM2J
	J323 8409	1			1981: Without US California, with Automatic Transmission, Tagged 1DA2J
2	J322 9622	1			GASKET
3	J324 0515	1			INSULATOR
4	J319 1886	1			GASKET
5	J400 3825	4			NUT
6	J813 3820	1			REPAIR PACKAGE, Carburetor
7	J812 8276	1			LEVER ASSY ***
8	J812 1329	1			SCREW, Fast Idle
9	J812 5812	AR			HOSE, Bulk
10					DIAPHRAGM, Choke
	J813 4496	1			With Carburetor Tagged 1DA2J
	J448 8478	1			With Carburetor Tagged 1DM2J
11	J320 9922	1			CLIP
12	J320 9901	1			SCREW
13	J448 8175	1			VALVE, Choke
14	J320 9925	1			CLIP, Retaining
15	J448 5446	1			SCREW
16	J320 9880	1			SEAL
17	J812 5987	1			BUSHING
18	J448 8180	1			PLATE
19	J812 3037	1			WEIGHT ***
20	S014 5637				BALL, Discharge Check
21	J448 8178	1			FLOAT, Carburetor
22	J320 9910	1			SHAFT
23	J812 1330	1			RETAINER
24	J812 8309	1			NEEDLE, Incl. Seat ***
25	J448 5441	3			SCREW
26	J813 3834	1			SCREW PACKAGE
27	J027 1163	1			NUT
28	S010 7381	1			NUT
29	J812 0480	1			SOLENOID, Idle Speed, with Carburetor Tagged 1DA2J
30	J812 1166	1			BRACKET ASSY ***
31	J812 4455	1			CLIP
32	J812 5981	1			ROD
33	J812 5985	1			DIAPHRAGM ASSY, Accelerator Pump ***

MODEL CODES

16=Cherokee 2 Dr.(1981-83)
17=Cherokee 2 Dr.(1981-83)
73=Cherokee 2WD-2 Dr.(1984-86)
74=Cherokee 2WD-4 Dr.(1984-86)
18=Cherokee 4 Dr.(1981-83)
77=Cherokee 4WD-2 Dr.(1984-86)
78=Cherokee 4WD-4 Dr.(1984-86)
85=CJ-5 (1981-83)
86=CJ-6(1981)
87=CJ-7(1981-86)
88=CJ-8, Scrambler(1981-86)
64=Comanche 2WD-6 Ft. Box(1986)
66=Comanche 2WD-7 Ft. Box(1986)
63=Comanche 4WD-6 Ft. Box(1986)
65=Comanche 4WD-7 Ft. Box(1986)
15=Grand Wagoneer 4 Dr.(1984-86)
25=J-10 Truck 7 Ft. Box(1981-84)
26=J10 Truck 8 Ft. Box(1981-86)
27=J-20 Truck 8 Ft. Box(1981-86)
15=Wagoneer 4 Dr.(1981-83)
75=Wagoneer 4WD-4 Dr.(1984-86)

BODY
CJ=CJ-5, CJ-6, CJ-7, CJ-8, Scrambler(1981-86)
MJ=Comanche Pickup(1986)

STYLES
SJ=Wagoneer(1981-83), Grand Wagoneer(1984-86), Cherokee(1981-83), J-10, J-20(1981-86)
XJ=Wagoneer(1984-86), Cherokee(1984-86)

AR = Use as Required - = Non Illustrated Part P.A.R. = Paint as Required

« RETURN TO GROUP INDEX »

CARBURETOR AND COMPONENT PARTS 1981 EIGHT CYLINDER CJ-5,6,7,8, SCRAMBLER
Figure 14-1300

81J14 1300

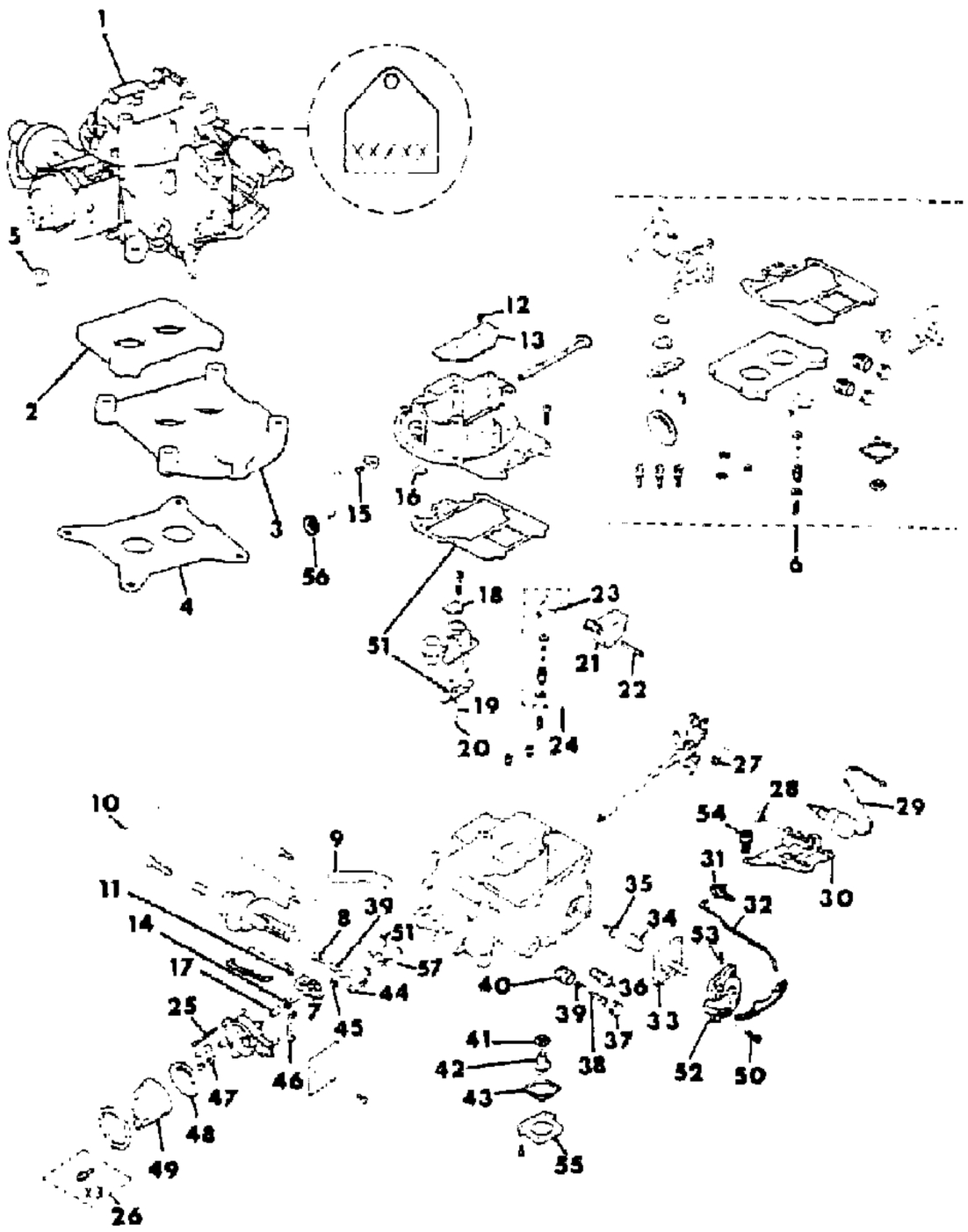

ITEM	PART NUMBER	QTY	BODY	MODEL	DESCRIPTION
34	J812 5040	1			SPRING
35	J320 9916	1			VALVE, Check
36	J013 7406	1			FITTING
37	J813 3831	2			CAP
38	J813 3890	2			SCREW, Idle Mixture
39	J320 9917	3			SPRING
40	J813 3832	2			PLUG
41	J813 3240	1			GASKET
42	J812 5042	1			VALVE, Power
43	J320 9885	1			GASKET
44	J027 1169	1			NUT
45	J448 8171	3			CLIP, Retaining
46	J320 9893	1			ROD
47	J812 8327	1			LEVER
48	J812 1333	1			GASKET
49	J813 0615	1			COVER ASSY ***
50	J448 8169	4			SCREW
51	J813 3821	1			GASKET PACKAGE
52	J812 5982	1			COVER
53	J320 9891	1			PIN
54	J448 5440	1			SCREW
55	J812 5043	1			COVER
56	J320 9922	2			RING
57	J812 1331	1			LEVER

MODEL CODES

16=Cherokee 2 Dr.(1981-83)
17=Cherokee 2 Dr.(1981-83)
73=Cherokee 2WD-2 Dr.(1984-86)
74=Cherokee 2WD-4 Dr.(1984-86)
18=Cherokee 4 Dr.(1981-83)
77=Cherokee 4WD-2 Dr.(1984-86)
78=Cherokee 4WD-4 Dr.(1984-86)
85=CJ-5 (1981-83)
86=CJ-6(1981)
87=CJ-7(1981-86)
88=CJ-8, Scrambler(1981-86)
64=Comanche 2WD-6 Ft. Box(1986)
66=Comanche 2WD-7 Ft. Box(1986)
63=Comanche 4WD-6 Ft. Box(1986)
65=Comanche 4WD-7 Ft. Box(1986)
15=Grand Wagoneer 4 Dr.(1984-86)
25=J-10 Truck 7 Ft. Box(1981-84)
26=J10 Truck 8 Ft. Box(1981-86)
27=J-20 Truck 8 Ft. Box(1981-86)
15=Wagoneer 4 Dr.(1981-83)
75=Wagoneer 4WD-4 Dr.(1984-86)

BODY
CJ=CJ-5, CJ-6, CJ-7, CJ-8, Scrambler(1981-86)
MJ=Comanche Pickup(1986)

STYLES
SJ=Wagoneer(1981-83), Grand Wagoneer(1984-86), Cherokee(1981-83), J-10, J-20(1981-86)
XJ=Wagoneer(1984-86), Cherokee(1984-86)

AR = Use as Required - = Non Illustrated Part P.A.R. = Paint as Required

« RETURN TO GROUP INDEX

FUEL INJECTION SYSTEM 1981-85 ISUZU DIESEL, EXPORT CJ-5,6,7,8
Figure 14-1400

81J14 1400

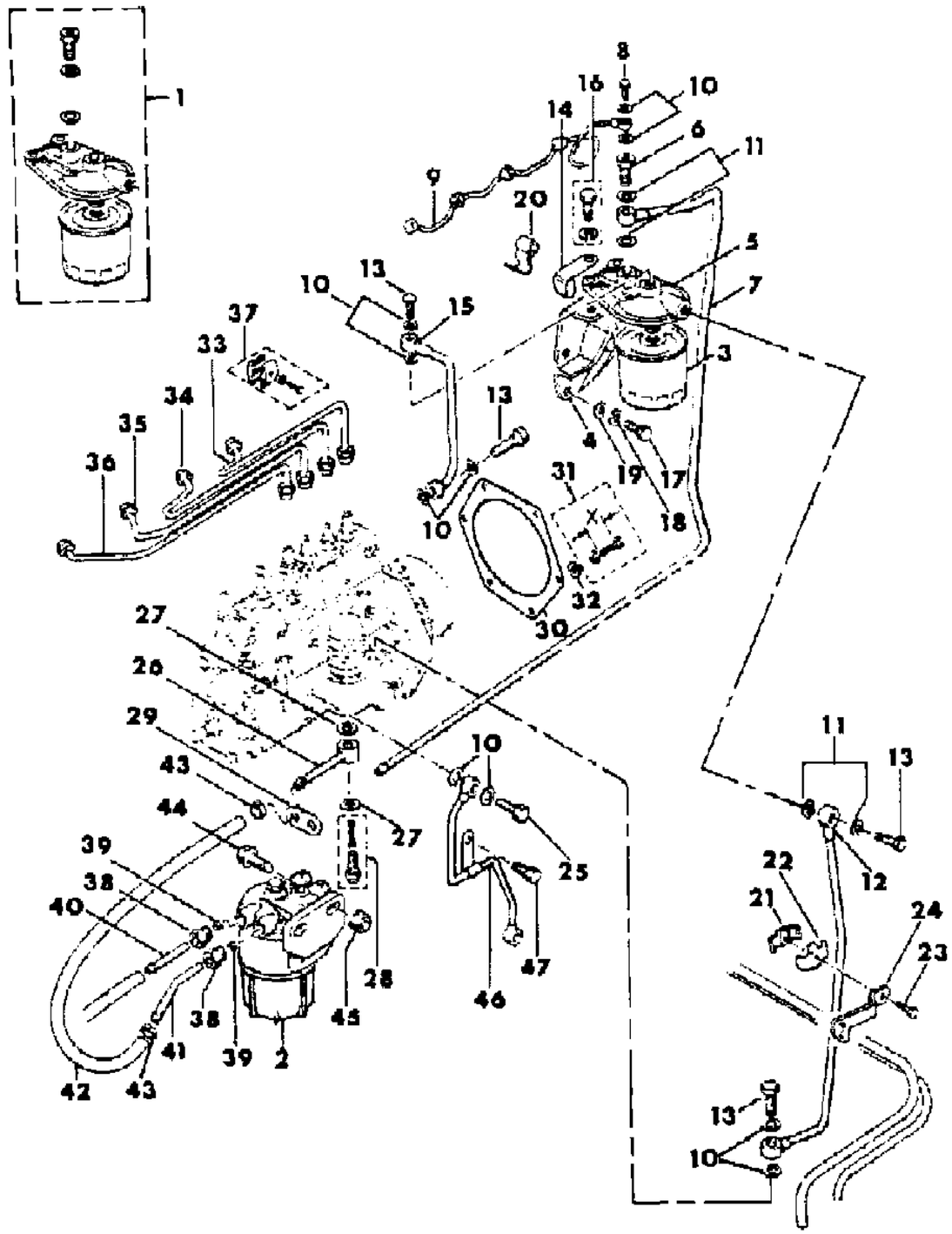

ITEM	PART NUMBER	QTY	BODY	MODEL	DESCRIPTION
1	J806 0264	1			FILTER ASSY, Fuel ***
2	J535 8232	1			SEDIMENTER ASSY ***
3	J806 0272	1			ELEMENT, Fuel Filter
4	J806 0419	1			BRACKET
5	J806 0267	1			COVER
6	J806 0273	1			VALVE ASSY, Overflow ***
7	J806 0343	1			PIPE, Overflow
8	J806 0142	1			BOLT
9	J806 0346	1			PIPE, Fuel Bypass
10	J806 0094	8			SEAL
11	J806 0097	4			SEAL
12	J806 0344	1			PIPE, Fuel Pump
13	J806 0143	4			BOLT
14	J806 0149	1			CLIP
15	J806 0345	1			PIPE, Fuel Filter
16	J806 0022	2			BOLT
17	J806 0034	2			BOLT
18	J806 0067	2			WASHER, Lock
19	J806 0074	2			WASHER, Plain
20	J806 0150	1			CLIP
21	J806 0120	1			CLIP
22	J806 0119	1			CLIP
23	J806 0017	1			BOLT
24	J806 0298	1			CLIP
25	J806 0118	1			BOLT, Eye
26	J806 0342	1			PIPE, Fuel Inlet
27	J806 0412	2			GASKET
28	J806 0144	1			BOLT, Eye
29	J806 0151	1			CLIP
30	J806 0189	1			GASKET
31					BOLT
	J806 0020	4			32mm
	J806 0048	2			80mm
32	J806 0074	2			WASHER
33	J806 0338	1			PIPE, Injector #1
34	J806 0339	1			PIPE, Injector #2
35	J806 0340	1			PIPE, Injector #3
36	J806 0341	1			PIPE, Injector #4
37	J806 0347	3			CLIP

MODEL CODES
16=Cherokee 2 Dr.(1981-83)
17=Cherokee 2 Dr.(1981-83)
73=Cherokee 2WD-2 Dr.(1984-86)
74=Cherokee 2WD-4 Dr.(1984-86)
18=Cherokee 4 Dr.(1981-83)
77=Cherokee 4WD-2 Dr.(1984-86)
78=Cherokee 4WD-4 Dr.(1984-86)
85=CJ-5 (1981-83)
86=CJ-6(1981)
87=CJ-7(1981-86)
88=CJ-8, Scrambler(1981-86)
64=Comanche 2WD-6 Ft. Box(1986)
66=Comanche 2WD-7 Ft. Box(1986)
63=Comanche 4WD-6 Ft. Box(1986)
65=Comanche 4WD-7 Ft. Box(1986)
15=Grand Wagoneer 4 Dr.(1984-86)
25=J-10 Truck 7 Ft. Box(1981-84)
26=J10 Truck 8 Ft. Box(1981-86)
27=J-20 Truck 8 Ft. Box(1981-86)
15=Wagoneer 4 Dr.(1981-83)
75=Wagoneer 4WD-4 Dr.(1984-86)

BODY
CJ=CJ-5, CJ-6, CJ-7, CJ-8, Scrambler(1981-86)
MJ=Comanche Pickup(1986)

STYLES
SJ=Wagoneer(1981-83), Grand Wagoneer(1984-86), Cherokee(1981-83), J-10, J-20(1981-86)
XJ=Wagoneer(1984-86), Cherokee(1984-86)

AR = Use as Required - = Non Illustrated Part P.A.R. = Paint as Required

« RETURN TO GROUP INDEX »

FUEL INJECTION SYSTEM 1981-85 ISUZU DIESEL, EXPORT CJ-5,6,7,8
Figure 14-1400

81J14 1400

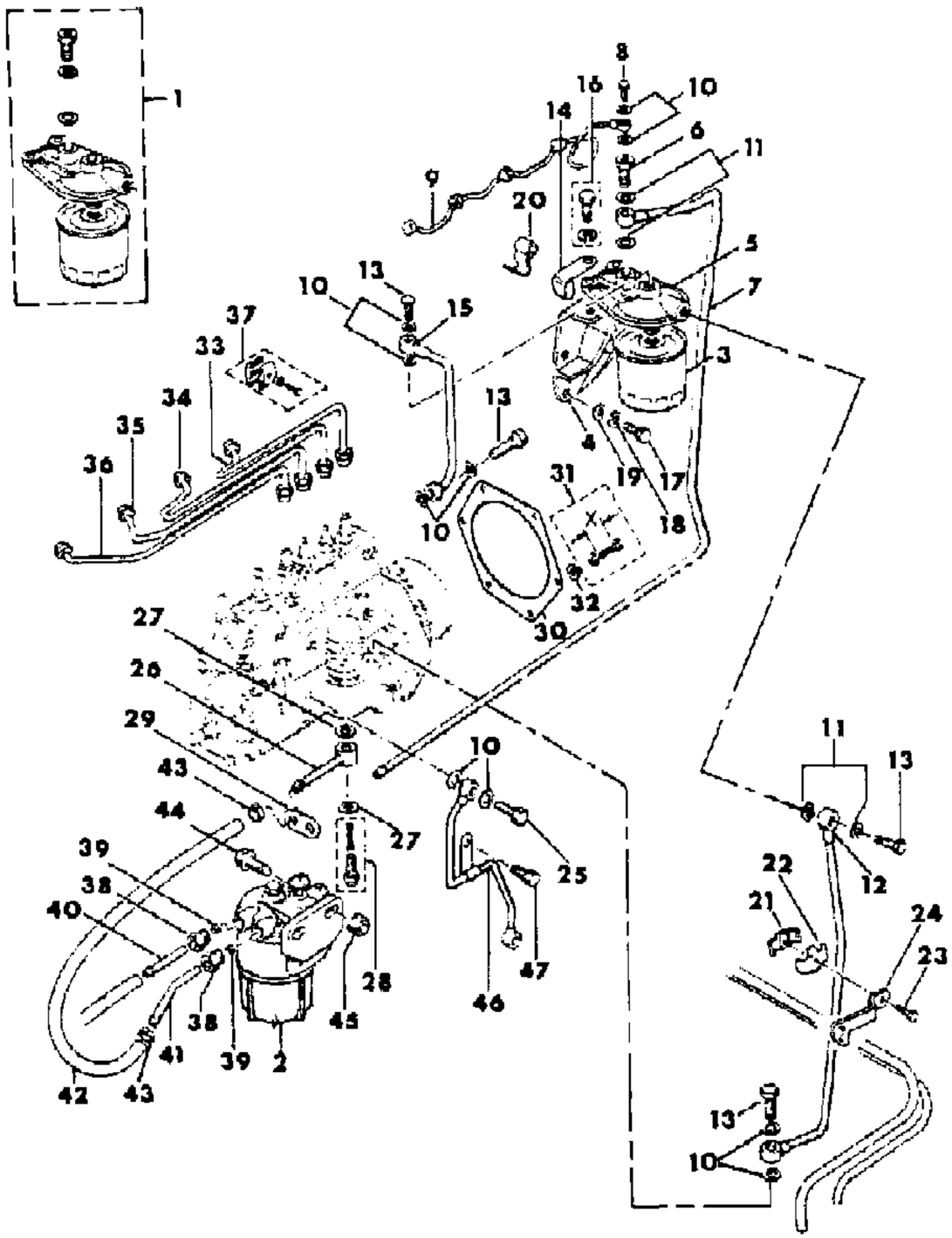

ITEM	PART NUMBER	QTY	BODY	MODEL	DESCRIPTION
38	J400 5893	2			FITTING
39	S011 4631	2			SLEEVE
40	J535 8236	1			TUBE
41	J536 1608	1			TUBE
42	J812 5781	AR			HOSE
43	J322 7851	3			CLAMP
44	J027 4195	2			BOLT
45	J400 3909	2			NUT
46	J806 0275	1			PIPE, Oil Injector Pump
47	J806 0007	1			BOLT

MODEL CODES

16=Cherokee 2 Dr.(1981-83)
17=Cherokee 2 Dr.(1981-83)
73=Cherokee 2WD-2 Dr.(1984-86)
74=Cherokee 2WD-4 Dr.(1984-86)
18=Cherokee 4 Dr.(1981-83)
77=Cherokee 4WD-2 Dr.(1984-86)
78=Cherokee 4WD-4 Dr.(1984-86)
85=CJ-5 (1981-83)
86=CJ-6(1981)
87=CJ-7(1981-86)
88=CJ-8, Scrambler(1981-86)
64=Comanche 2WD-6 Ft. Box(1986)
66=Comanche 2WD-7 Ft. Box(1986)
63=Comanche 4WD-6 Ft. Box(1986)
65=Comanche 4WD-7 Ft. Box(1986)
15=Grand Wagoneer 4 Dr.(1984-86)
25=J-10 Truck 7 Ft. Box(1981-84)
26=J10 Truck 8 Ft. Box(1981-86)
27=J-20 Truck 8 Ft. Box(1981-86)
15=Wagoneer 4 Dr.(1981-83)
75=Wagoneer 4WD-4 Dr.(1984-86)

BODY

CJ=CJ-5, CJ-6, CJ-7, CJ-8, Scrambler(1981-86)
MJ=Comanche Pickup(1986)

STYLES

SJ=Wagoneer(1981-83), Grand Wagoneer(1984-86), Cherokee(1981-83), J-10, J-20(1981-86)
XJ=Wagoneer(1984-86), Cherokee(1984-86)

AR = Use as Required - = Non Illustrated Part P.A.R. = Paint as Required

« RETURN TO GROUP INDEX

NOZZLE, INJECTOR 1981-85 ISUZU DIESEL, EXPORT CJ-5,6,7,8
Figure 14-1500

81J14 1500

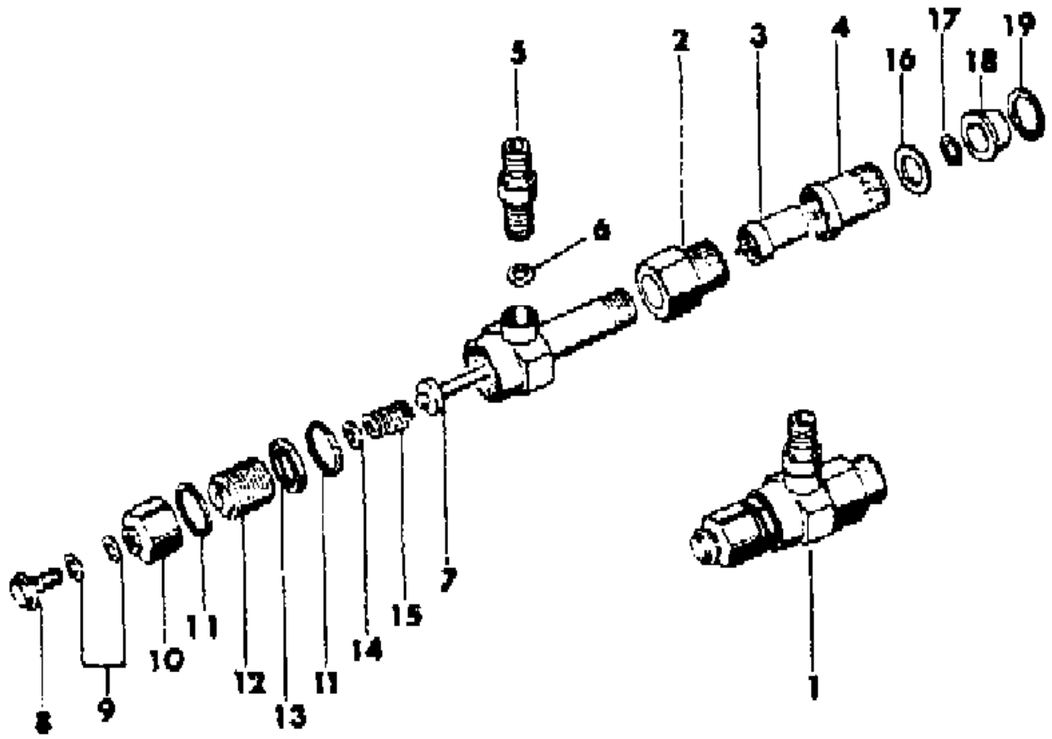

ITEM	PART NUMBER	QTY	BODY	MODEL	DESCRIPTION
1	J806 0325	4			NOZZLE, Injector
2	J806 0337	4			SCREW, Adjusting
3	J806 0321	4			NOZZLE, Injector
4	J806 0327	4			NUT, Retainer
5	J806 0335	4			CONNECTOR
6	J806 0336	4			GASKET
7	J806 0332	4			ROD
8	J806 0334	4			BOLT, Eye
9	J806 0094	8			GASKET
10	J806 0328	4			NUT
11	J806 0329	8			GASKET
12	J806 0331	4			SCREW, Adjusting
13	J806 0326	4			NUT
14	J806 0330	4			WASHER
15	J806 0333	4			SPRING
16	J806 0322	4			WASHER
17	J806 0324	4			WASHER
18	J806 0323	4			SHIELD
19	J806 0591	4			WASHER

MODEL CODES

16=Cherokee 2 Dr.(1981-83)
17=Cherokee 2 Dr.(1981-83)
73=Cherokee 2WD-2 Dr.(1984-86)
74=Cherokee 2WD-4 Dr.(1984-86)
18=Cherokee 4 Dr.(1981-83)
77=Cherokee 4WD-2 Dr.(1984-86)
78=Cherokee 4WD-4 Dr.(1984-86)
85=CJ-5 (1981-83)
86=CJ-6(1981)
87=CJ-7(1981-86)
88=CJ-8, Scrambler(1981-86)
64=Comanche 2WD-6 Ft. Box(1986)
66=Comanche 2WD-7 Ft. Box(1986)
63=Comanche 4WD-6 Ft. Box(1986)
65=Comanche 4WD-7 Ft. Box(1986)
15=Grand Wagoneer 4 Dr.(1984-86)
25=J-10 Truck 7 Ft. Box(1981-84)
26=J10 Truck 8 Ft. Box(1981-86)
27=J-20 Truck 8 Ft. Box(1981-86)
15=Wagoneer 4 Dr.(1981-83)
75=Wagoneer 4WD-4 Dr.(1984-86)

BODY
CJ=CJ-5, CJ-6, CJ-7, CJ-8, Scrambler(1981-86)
MJ=Comanche Pickup(1986)

STYLES
SJ=Wagoneer(1981-83), Grand Wagoneer(1984-86), Cherokee(1981-83), J-10, J-20(1981-86)
XJ=Wagoneer(1984-86), Cherokee(1984-86)

AR = Use as Required - = Non Illustrated Part P.A.R. = Paint as Required

« RETURN TO GROUP INDEX

THROTTLE VALVE AND SHUTTER 1981-85 ISUZU DIESEL, EXPORT CJ-5,6,7,8
Figure 14-1600

81J14 1600 A

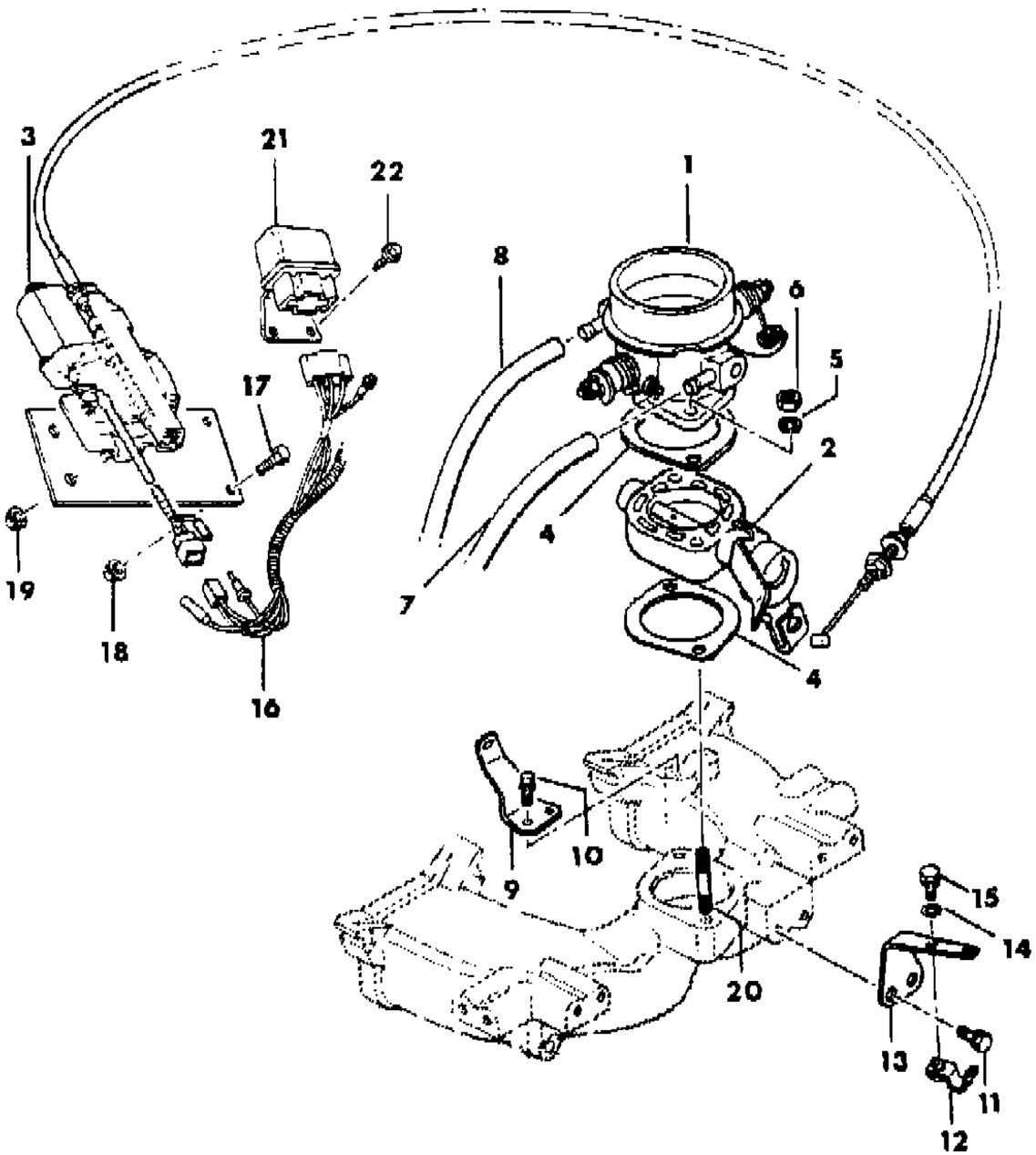

ITEM	PART NUMBER	QTY	BODY	MODEL	DESCRIPTION
1	J806 0315	1			VALVE ASSEMBLY, Throttle ***
2	J806 0316	1			SHUTTER, Intake ***
3	J575 2248	1			ACTUATOR, Throttle
4	J806 0106	2			GASKET
5	J806 0064	2			WASHER, Lock
6	J806 0061	2			NUT
7	J806 0145	1			HOSE, Vacuum
8	J806 0146	1			HOSE, Vent
9	J806 0319	1			BRACKET
10	J806 0016	2			BOLT
11	J806 0013	2			BOLT
12	J806 0320	1			CLIP
13	J806 0318	1			BRACKET
14	J806 0071	1			WASHER, Plain
15	J806 0014	1			BOLT
16	J575 7086	1			HARNESS
17	S018 6491	2			BOLT
18	J941 6918	2			NUT
19	J420 0046	2			NUT
20	J806 0036	2			STUD
21	J575 2417	1			RELAY ***
22					SCREW
	J400 4801	1			5/8"
	J943 1948	1			3/4"

MODEL CODES

16=Cherokee 2 Dr.(1981-83)	78=Cherokee 4WD-4 Dr.(1984-86)	64=Comanche 2WD-6 Ft. Box(1986)	25=J-10 Truck 7 Ft. Box(1981-84)
17=Cherokee 2 Dr.(1981-83)	85=CJ-5 (1981-83)	66=Comanche 2WD-7 Ft. Box(1986)	26=J10 Truck 8 Ft. Box(1981-86)
73=Cherokee 2WD-2 Dr.(1984-86)	86=CJ-6(1981)	63=Comanche 4WD-6 Ft. Box(1986)	27=J-20 Truck 8 Ft. Box(1981-86)
74=Cherokee 2WD-4 Dr.(1984-86)	87=CJ-7(1981-86)	65=Comanche 4WD-7 Ft. Box(1986)	15=Wagoneer 4 Dr.(1981-83)
18=Cherokee 4 Dr.(1981-83)	88=CJ-8, Scrambler(1981-86)	15=Grand Wagoneer 4 Dr.(1984-86)	75=Wagoneer 4WD-4 Dr.(1984-86)
77=Cherokee 4WD-2 Dr.(1984-86)			

BODY
CJ=CJ-5, CJ-6, CJ-7, CJ-8, Scrambler(1981-86)
MJ=Comanche Pickup(1986)

STYLES
SJ=Wagoneer(1981-83), Grand Wagoneer(1984-86), Cherokee(1981-83), J-10, J-20(1981-86)
XJ=Wagoneer(1984-86), Cherokee(1984-86)

AR = Use as Required - = Non Illustrated Part P.A.R. = Paint as Required

« RETURN TO GROUP INDEX

FUEL INJECTION SYSTEM 1986 RENAULT DIESEL, EXPORT CJ-7,8
Figure 14-1700

81J14 1700

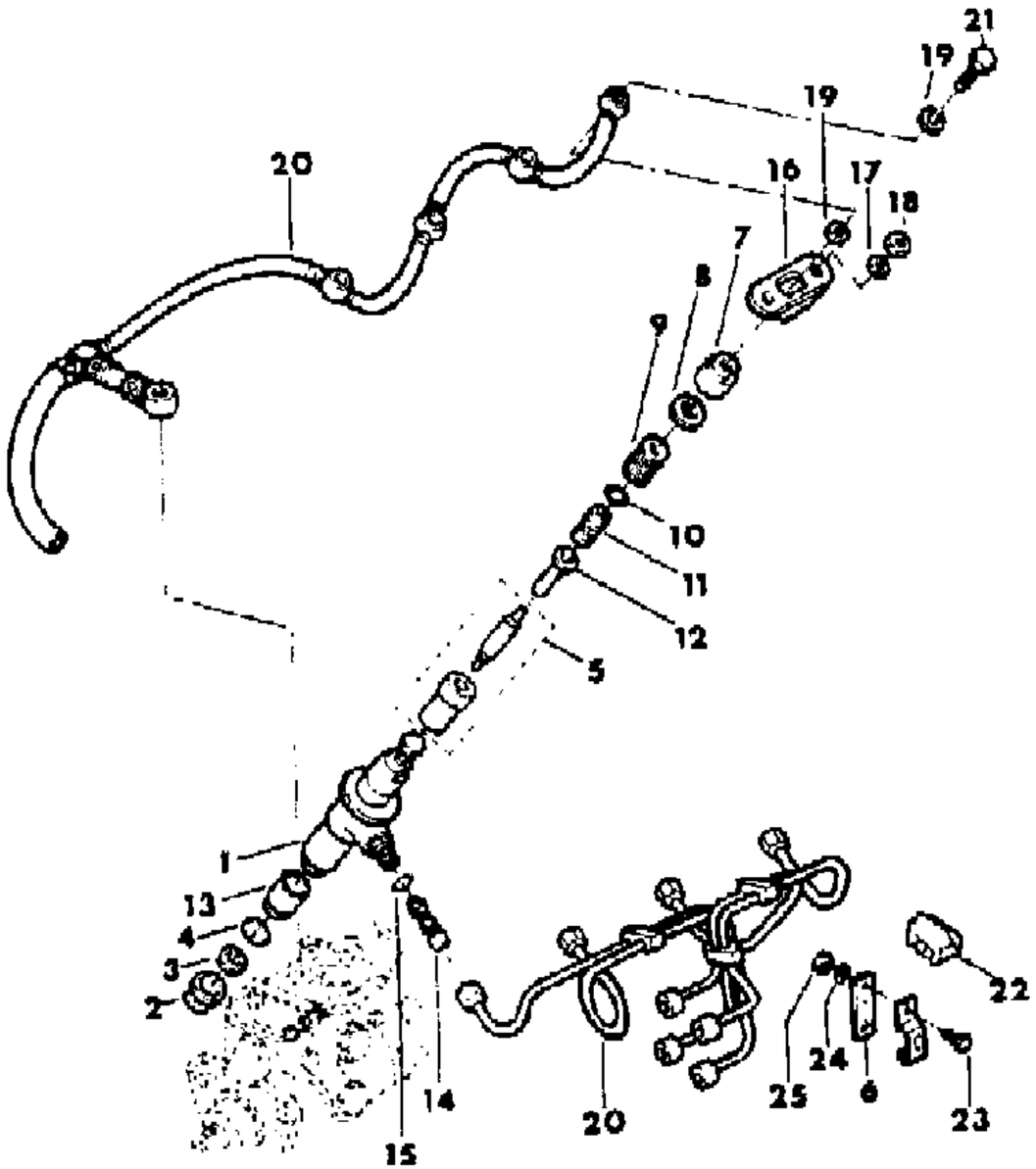

ITEM	PART NUMBER	QTY	BODY	MODEL	DESCRIPTION
1	T068 0344	4			INJECTOR, Fuel
2					SHIELD
	T069 0543	4			17.5mm
	T069 0544	4			17.7mm
3	T066 3363	4			GASKET
4	T069 0542	4			O-RING
5	T102 5670	4			NOZZLE, Injector
6	T004 1881	3			BRACKET
7	T524 3000	4			NUT
8	T524 3100	4			GASKET
9	T527 3900	4			SCREW, Adjusting
10	T524 3300	4			GASKET
11	T102 5175	4			SPRING
12	T102 5174	4			PUSHROD ***
13	T102 5173	4			NUT
14	T524 3700	4			CONNECTOR
15	T524 3800	4			GASKET
16	T068 4502	4			CLAMP
17	T305 3037	4			WASHER
18	T149 3047	4			NUT
19	T024 2149	8			WASHER
20	T134 9505	1			HOSE ASSY ***
21	T524 2800	4			UNION ***
22	T102 7035	1			RETAINER
23	T300 1118	1			SCREW
24	T305 6008	1			WASHER
25	T149 3045	1			NUT

MODEL CODES

16=Cherokee 2 Dr.(1981-83)
17=Cherokee 2 Dr.(1981-83)
73=Cherokee 2WD-2 Dr.(1984-86)
74=Cherokee 2WD-4 Dr.(1984-86)
18=Cherokee 4 Dr.(1981-83)
77=Cherokee 4WD-2 Dr.(1984-86)
78=Cherokee 4WD-4 Dr.(1984-86)
85=CJ-5 (1981-83)
86=CJ-6(1981)
87=CJ-7(1981-86)
88=CJ-8, Scrambler(1981-86)
64=Comanche 2WD-6 Ft. Box(1986)
66=Comanche 2WD-7 Ft. Box(1986)
63=Comanche 4WD-6 Ft. Box(1986)
65=Comanche 4WD-7 Ft. Box(1986)
15=Grand Wagoneer 4 Dr.(1984-86)
25=J-10 Truck 7 Ft. Box(1981-84)
26=J10 Truck 8 Ft. Box(1981-86)
27=J-20 Truck 8 Ft. Box(1981-86)
15=Wagoneer 4 Dr.(1981-83)
75=Wagoneer 4WD-4 Dr.(1984-86)

BODY
CJ=CJ-5, CJ-6, CJ-7, CJ-8, Scrambler(1981-86)
MJ=Comanche Pickup(1986)

STYLES
SJ=Wagoneer(1981-83), Grand Wagoneer(1984-86), Cherokee(1981-83), J-10, J-20(1981-86)
XJ=Wagoneer(1984-86), Cherokee(1984-86)

AR = Use as Required - = Non Illustrated Part P.A.R. = Paint as Required

« RETURN TO GROUP INDEX

ACCELERATOR PEDAL AND LINKAGE 1981-85 ISUZU, 1986 RENAULT DIESEL, EXPORT CJ-5,6,7,8
Figure 14-1800

81J14 1800

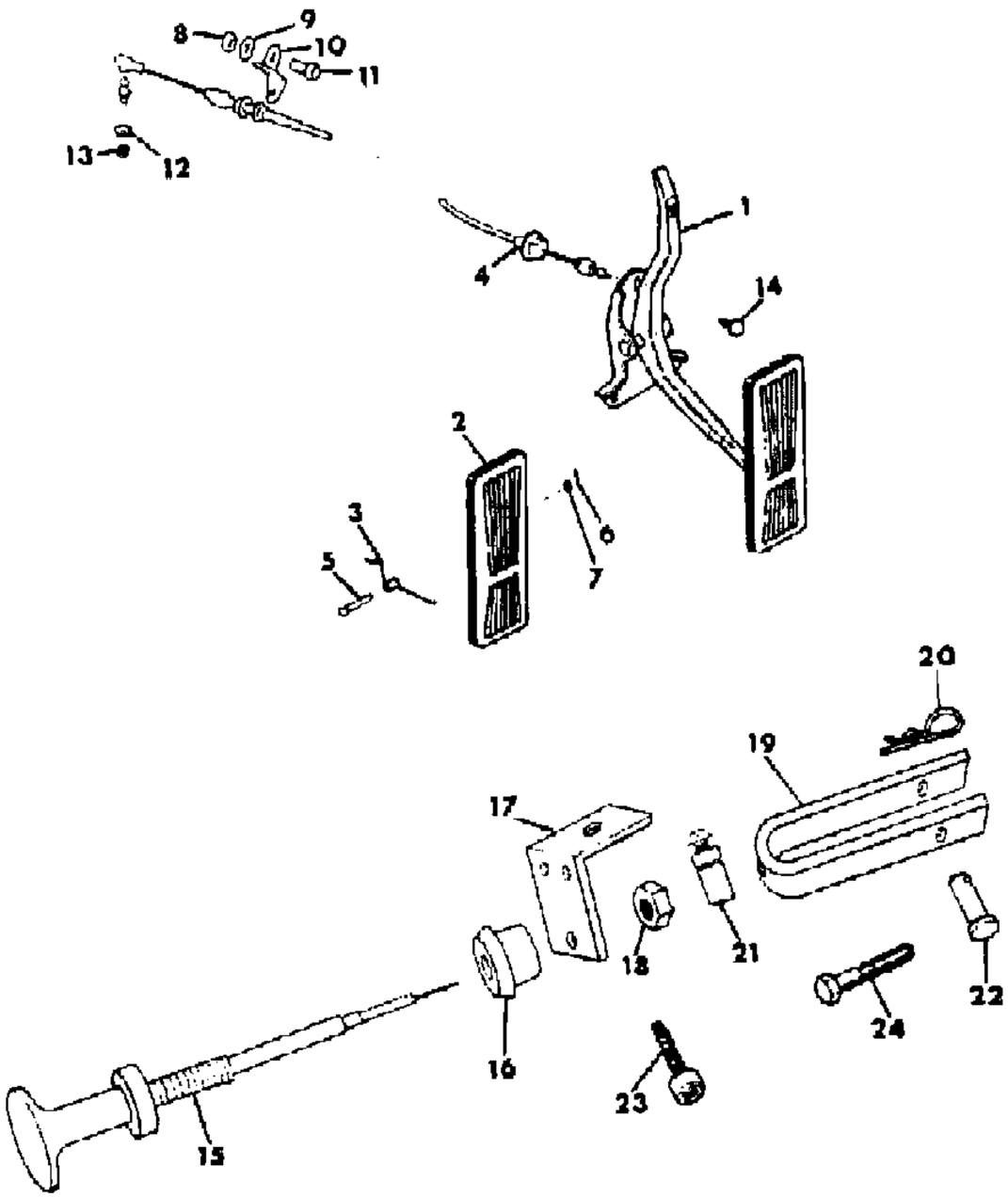

ITEM	PART NUMBER	QTY	BODY	MODEL	DESCRIPTION
1					PEDAL ASSY, Accelerator ***
	J535 7732	1			Left Hand Drive
	J535 4753	1			Right Hand Drive
2	J319 3332	1			PEDAL, Accelerator
3	J319 3369	1			SPRING
4					CABLE, Accelerator
	J537 0038	1			1981-85: Left Hand Drive
	J537 0110	1			1981-85: Right Hand Drive
	J537 0122	1			1986
5	J319 3368	1			PIN
6	J011 2726	1			PIN
7	J014 7579	1			WASHER
8	J448 7549	1			NUT, Lock
9	J400 1104	1			WASHER
10	J536 3782	1			BRACKET
11	J018 0120	1			BOLT
12	J012 0391	2			WASHER
13	J027 1169	1			NUT
14	J400 4801	AR			SCREW
15					CABLE ASSY, Fuel Enrichment ***
	J536 1677	1			1981-85
16	J321 3963	1			GROMMET
17	J575 2365	1			BRACKET
18	J027 1193	1			NUT
19	J536 1698	1			YOKE ***
20	J400 5758	1			PIN
21	J536 1697	1			STOP, Wire
22	J400 6650	1			PIN
23	J400 5969	2			SCREW
24	S150 2971	1			SCREW

MODEL CODES
16=Cherokee 2 Dr.(1981-83)
17=Cherokee 2 Dr.(1981-83)
73=Cherokee 2WD-2 Dr.(1984-86)
74=Cherokee 2WD-4 Dr.(1984-86)
18=Cherokee 4 Dr.(1981-83)
77=Cherokee 4WD-2 Dr.(1984-86)
78=Cherokee 4WD-4 Dr.(1984-86)
85=CJ-5 (1981-83)
86=CJ-6(1981)
87=CJ-7(1981-86)
88=CJ-8, Scrambler(1981-86)
64=Comanche 2WD-6 Ft. Box(1986)
66=Comanche 2WD-7 Ft. Box(1986)
63=Comanche 4WD-6 Ft. Box(1986)
65=Comanche 4WD-7 Ft. Box(1986)
15=Grand Wagoneer 4 Dr.(1984-86)
25=J-10 Truck 7 Ft. Box(1981-84)
26=J10 Truck 8 Ft. Box(1981-86)
27=J-20 Truck 8 Ft. Box(1981-86)
15=Wagoneer 4 Dr.(1981-83)
75=Wagoneer 4WD-4 Dr.(1984-86)

BODY
CJ=CJ-5, CJ-6, CJ-7, CJ-8, Scrambler(1981-86)
MJ=Comanche Pickup(1986)

STYLES
SJ=Wagoneer(1981-83), Grand Wagoneer(1984-86), Cherokee(1981-83), J-10, J-20(1981-86)
XJ=Wagoneer(1984-86), Cherokee(1984-86)

AR = Use as Required - = Non Illustrated Part P.A.R. = Paint as Required

« RETURN TO GROUP INDEX

ACCELERATOR PEDAL AND LINKAGE FOUR AND SIX CYLINDER CJ-5,6,7,8, SCRAMBLER
Figure 14-1900

81J14 1900

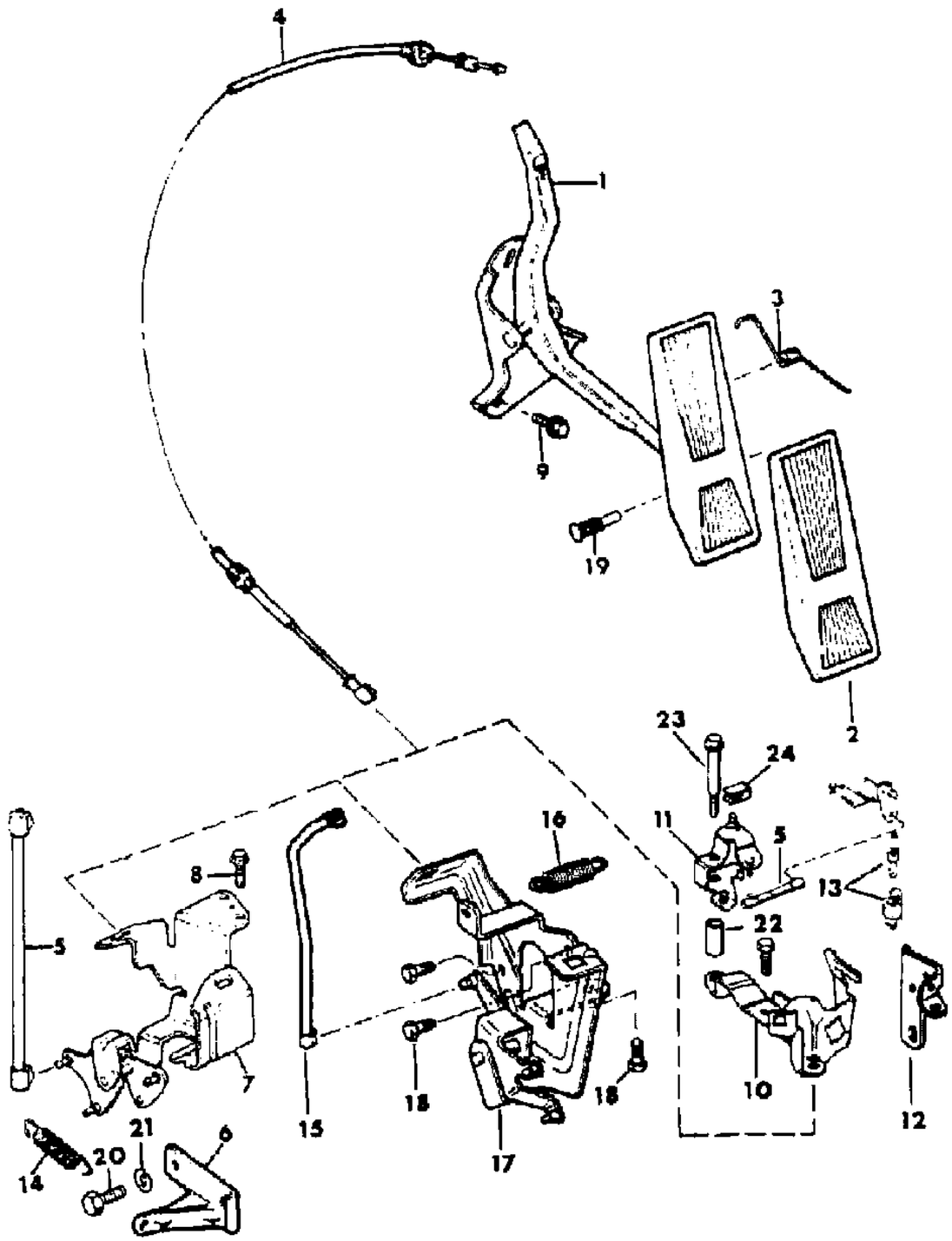

ITEM	PART NUMBER	QTY	BODY	MODEL	DESCRIPTION
1					PEDAL, Accelerator
	J535 7732	1			Left Hand Drive
	J535 4753	1			EXPORT, Right Hand Drive
2	J319 3332	1			PAD, Pedal
3	J319 3369	1			SPRING
4					CABLE, Accelerator
					Four Cylinder
	J536 1067	1			1981-83: GM
	J536 2512	1			1981-83: EXPORT, Right Hand Drive
	J536 4684	1			1983-86: AMC
	J536 4845	1			1984-86: EXPORT, Right Hand Drive
					Six Cylinder
	J536 2801	1			1981-86
	J535 8677	1			1981-86: EXPORT, Non-Regulated Markets
	J535 7953	1			1981-86: EXPORT, Right Hand Drive, Non-Regulated Markets
	J536 2802	1			1981-86: EXPORT, Right Hand Drive, without Non-Regulated Markets
5					LINK
					Four Cylinder
	J813 2363	1			1981-83: GM
					Six Cylinder
	J323 9634	1			1981-86
6					BRACKET, Spring Mounting
					Six Cylinder
	J535 9319	1			1981-86
	J536 4750	1			1981-86: EXPORT, Non-Regulated Markets
7					BELLCRANK ASSY ***
	J536 2728	1			Six Cylinder
8	J027 3573	3			SCREW
9	J400 4801	3			SCREW
10					BRACKET
					Four Cylinder
	J813 2361	1			1981-83: GM
11					BELLCRANK
					Four Cylinder
	J813 2334	1			1981-83: GM
12					BRACKET
					Four Cylinder
	J813 2360	1			1981-83: GM

MODEL CODES
16=Cherokee 2 Dr.(1981-83)
17=Cherokee 2 Dr.(1981-83)
73=Cherokee 2WD-2 Dr.(1984-86)
74=Cherokee 2WD-4 Dr.(1984-86)
18=Cherokee 4 Dr.(1981-83)
77=Cherokee 4WD-2 Dr.(1984-86)
78=Cherokee 4WD-4 Dr.(1984-86)
85=CJ-5 (1981-83)
86=CJ-6(1981)
87=CJ-7(1981-86)
88=CJ-8, Scrambler(1981-86)
64=Comanche 2WD-6 Ft. Box(1986)
66=Comanche 2WD-7 Ft. Box(1986)
63=Comanche 4WD-6 Ft. Box(1986)
65=Comanche 4WD-7 Ft. Box(1986)
15=Grand Wagoneer 4 Dr.(1984-86)
25=J-10 Truck 7 Ft. Box(1981-84)
26=J10 Truck 8 Ft. Box(1981-86)
27=J-20 Truck 8 Ft. Box(1981-86)
15=Wagoneer 4 Dr.(1981-83)
75=Wagoneer 4WD-4 Dr.(1984-86)

BODY
CJ=CJ-5, CJ-6, CJ-7, CJ-8, Scrambler(1981-86)
MJ=Comanche Pickup(1986)

STYLES
SJ=Wagoneer(1981-83), Grand Wagoneer(1984-86), Cherokee(1981-83), J-10, J-20(1981-86)
XJ=Wagoneer(1984-86), Cherokee(1984-86)

AR = Use as Required - = Non Illustrated Part P.A.R. = Paint as Required

ACCELERATOR PEDAL AND LINKAGE FOUR AND SIX CYLINDER CJ-5,6,7,8, SCRAMBLER
Figure 14-1900

81J14 1900

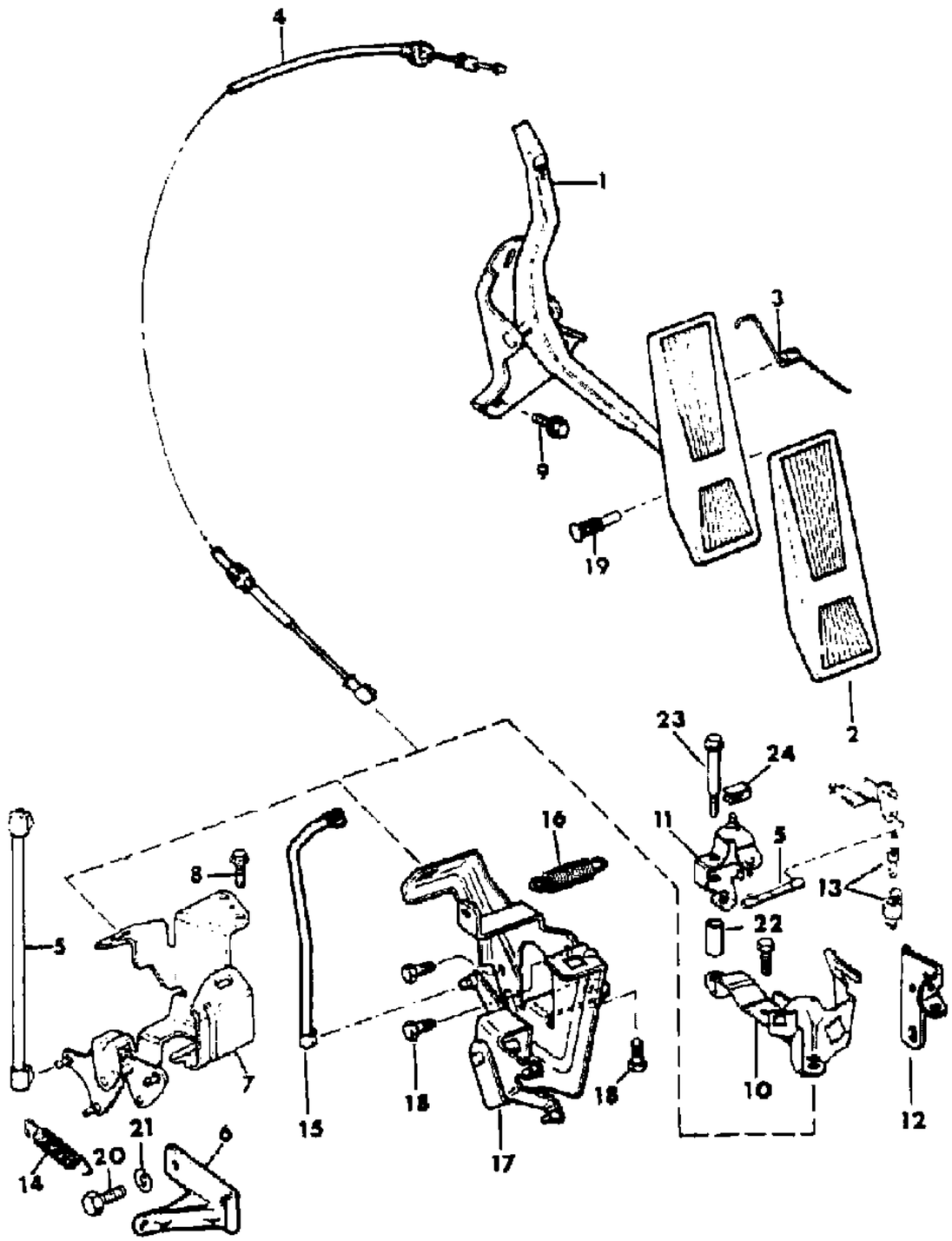

ITEM	PART NUMBER	QTY	BODY	MODEL	DESCRIPTION
13					SPRING
					Four Cylinder
	J813 2336	1			1981-83: GM, Inner
	J813 2337	1			1981-83: GM, Outer
14					SPRING, Return
	J535 8241	2			Six Cylinder
15					LINK
					Four Cylinder
	3300 1068	1			1984-86: AMC
16					SPRING, Return
					Four Cylinder
	3300 1069	1			1984-86: AMC
17					BRACKET
					Four Cylinder
	3300 1065	1			1984-86: AMC
18					SCREW
					Four Cylinder
	S017 9814	3			1984-86: AMC
19	J322 0231	1			PIN
20	J018 0077	2			BOLT
21	J012 0214	2			WASHER, Lock
22	J813 2362	1			SPACER
23	J813 2335	1			BOLT
24	J400 6578	1			CLIP

MODEL CODES

16=Cherokee 2 Dr.(1981-83)
17=Cherokee 2 Dr.(1981-83)
73=Cherokee 2WD-2 Dr.(1984-86)
74=Cherokee 2WD-4 Dr.(1984-86)
18=Cherokee 4 Dr.(1981-83)
77=Cherokee 4WD-2 Dr.(1984-86)
78=Cherokee 4WD-4 Dr.(1984-86)
85=CJ-5 (1981-83)
86=CJ-6(1981)
87=CJ-7(1981-86)
88=CJ-8, Scrambler(1981-86)
64=Comanche 2WD-6 Ft. Box(1986)
66=Comanche 2WD-7 Ft. Box(1986)
63=Comanche 4WD-6 Ft. Box(1986)
65=Comanche 4WD-7 Ft. Box(1986)
15=Grand Wagoneer 4 Dr.(1984-86)
25=J-10 Truck 7 Ft. Box(1981-84)
26=J10 Truck 8 Ft. Box(1981-86)
27=J-20 Truck 8 Ft. Box(1981-86)
15=Wagoneer 4 Dr.(1981-83)
75=Wagoneer 4WD-4 Dr.(1984-86)

BODY
CJ=CJ-5, CJ-6, CJ-7, CJ-8, Scrambler(1981-86)
MJ=Comanche Pickup(1986)

STYLES
SJ=Wagoneer(1981-83), Grand Wagoneer(1984-86), Cherokee(1981-83), J-10, J-20(1981-86)
XJ=Wagoneer(1984-86), Cherokee(1984-86)

AR = Use as Required - = Non Illustrated Part P.A.R. = Paint as Required

« RETURN TO GROUP INDEX

ACCELERATOR PEDAL AND LINKAGE EIGHT CYLINDER CJ-5,6,7,8, SCRAMBLER
Figure 14-2000

81J14 2000

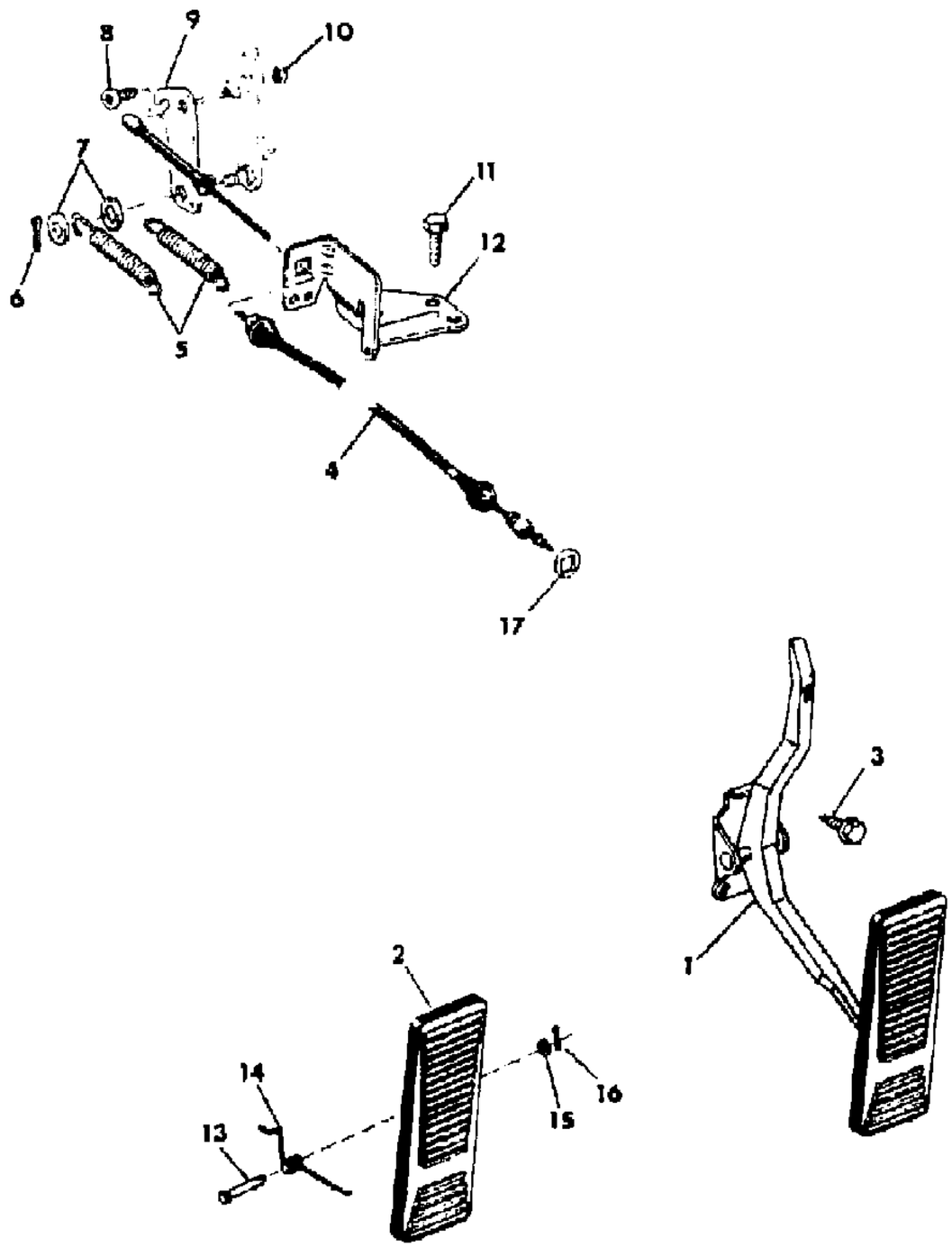

ITEM	PART NUMBER	QTY	BODY	MODEL	DESCRIPTION
1					PEDAL ASSY, Accelerator ***
	J535 7732	1			Left Hand Drive
	J535 4753	1			Right Hand Drive
2	J319 3332	1			PEDAL, Accelerator
3	J400 4801	AR			SCREW
4	J535 7931	1			CABLE, Accelerator
5	J535 7086	AR			SPRING
6	J043 5864	1			PIN
7	J012 0392	2			WASHER
8	J015 9582	1			SCREW
9	J535 2990	1			ADAPTER
10	J027 1163	1			NUT
11	J400 0987	2			SCREW
12	J535 7914	1			BRACKET
13	J319 3368	1			PIN, Clevis
14	J319 3369	1			SPRING
15	J014 7579	1			WASHER
16	J011 2726	1			PIN
17	J535 0628	AR			WASHER

MODEL CODES

16=Cherokee 2 Dr.(1981-83)
17=Cherokee 2 Dr.(1981-83)
73=Cherokee 2WD-2 Dr.(1984-86)
74=Cherokee 2WD-4 Dr.(1984-86)
18=Cherokee 4 Dr.(1981-83)
77=Cherokee 4WD-2 Dr.(1984-86)
78=Cherokee 4WD-4 Dr.(1984-86)
85=CJ-5 (1981-83)
86=CJ-6(1981)
87=CJ-7(1981-86)
88=CJ-8, Scrambler(1981-86)
64=Comanche 2WD-6 Ft. Box(1986)
66=Comanche 2WD-7 Ft. Box(1986)
63=Comanche 4WD-6 Ft. Box(1986)
65=Comanche 4WD-7 Ft. Box(1986)
15=Grand Wagoneer 4 Dr.(1984-86)
25=J-10 Truck 7 Ft. Box(1981-84)
26=J10 Truck 8 Ft. Box(1981-86)
27=J-20 Truck 8 Ft. Box(1981-86)
15=Wagoneer 4 Dr.(1981-83)
75=Wagoneer 4WD-4 Dr.(1984-86)

BODY
CJ=CJ-5, CJ-6, CJ-7, CJ-8, Scrambler(1981-86)
MJ=Comanche Pickup(1986)

STYLES
SJ=Wagoneer(1981-83), Grand Wagoneer(1984-86), Cherokee(1981-83), J-10, J-20(1981-86)
XJ=Wagoneer(1984-86), Cherokee(1984-86)

AR = Use as Required - = Non Illustrated Part P.A.R. = Paint as Required

« RETURN TO GROUP INDEX

LINKAGE, AUTOMATIC TRANSMISSION THROTTLE VALVE 1981-86 CJ-5,6,7,8, SCRAMBLER
Figure 14-2100

81J14 2100

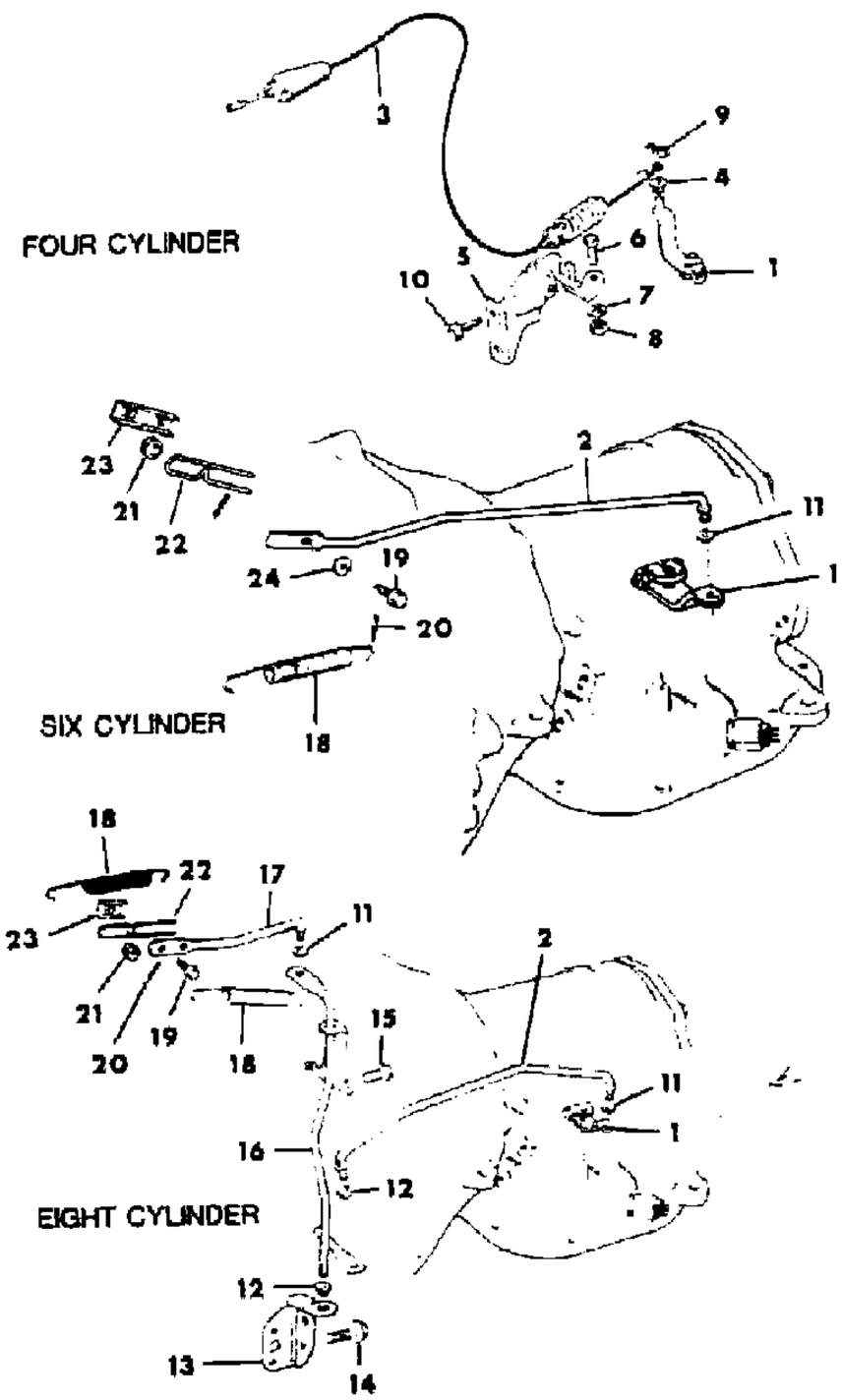

ITEM	PART NUMBER	QTY	BODY	MODEL	DESCRIPTION
1					LEVER
	J323 4812	1		87,88	1981: Four Cylinder
	J322 0677	1			1981: Six, Eight Cylinder
	J324 0357	1			1982-86
2					ROD
	J323 9831	1		87,88	1981: Six Cylinder
	J536 1061	1		87	1981: Eight Cylinder
	J536 1057	1			1981: EXPORT, Non-Regulated Markets, CKD, EXPORT vehicle shipped in knocked-down form for local assembly
	J324 0355	1		87,88	1982-86
3					CABLE
	J323 5862	1			1981: Four Cylinder
4					SPACER
	J323 0232	1			1981: Four Cylinder
5					BRACKET
	J323 6515	1			1981: Four Cylinder
6					BOLT
	J018 0146	1			1981: Four Cylinder
7					WASHER
	J012 0383	1			1981: Four Cylinder
8					NUT, Hex
	J027 1501	1			1981: Four Cylinder
9					PIN, Hitch
	J400 5758	1			1981: Four Cylinder
10					SCREW
	S017 2463	1			1981: Four Cylinder
11	J322 0125	AR			BUSHING
12					BUSHING
	J322 0413	2			1981: Eight Cylinder
13					BRACKET
	J536 1052	1			1981: Eight Cylinder
14					SCREW
	J400 6297	2			1981: Eight Cylinder
15					SCREW
	J027 4902	1			1981: Eight Cylinder
16					BELLCRANK
	J536 1331	1			1981: Eight Cylinder
17					ROD
	J536 1058	1			1981: Eight Cylinder

MODEL CODES

16=Cherokee 2 Dr.(1981-83)	78=Cherokee 4WD-4 Dr.(1984-86)	64=Comanche 2WD-6 Ft. Box(1986)	25=J-10 Truck 7 Ft. Box(1981-84)
17=Cherokee 2 Dr.(1981-83)	85=CJ-5 (1981-83)	66=Comanche 2WD-7 Ft. Box(1986)	26=J10 Truck 8 Ft. Box(1981-86)
73=Cherokee 2WD-2 Dr.(1984-86)	86=CJ-6(1981)	63=Comanche 4WD-6 Ft. Box(1986)	27=J-20 Truck 8 Ft. Box(1981-86)
74=Cherokee 2WD-4 Dr.(1984-86)	87=CJ-7(1981-86)	65=Comanche 4WD-7 Ft. Box(1986)	15=Wagoneer 4 Dr.(1981-83)
18=Cherokee 4 Dr.(1981-83)	88=CJ-8, Scrambler(1981-86)	15=Grand Wagoneer 4 Dr.(1984-86)	75=Wagoneer 4WD-4 Dr.(1984-86)
77=Cherokee 4WD-2 Dr.(1984-86)			

BODY
CJ=CJ-5, CJ-6, CJ-7, CJ-8, Scrambler(1981-86)
MJ=Comanche Pickup(1986)

STYLES
SJ=Wagoneer(1981-83), Grand Wagoneer(1984-86), Cherokee(1981-83), J-10, J-20(1981-86)
XJ=Wagoneer(1984-86), Cherokee(1984-86)

AR = Use as Required - = Non Illustrated Part P.A.R. = Paint as Required

LINKAGE, AUTOMATIC TRANSMISSION THROTTLE VALVE 1981-86 CJ-5,6,7,8, SCRAMBLER
Figure 14-2100

81J14 2100

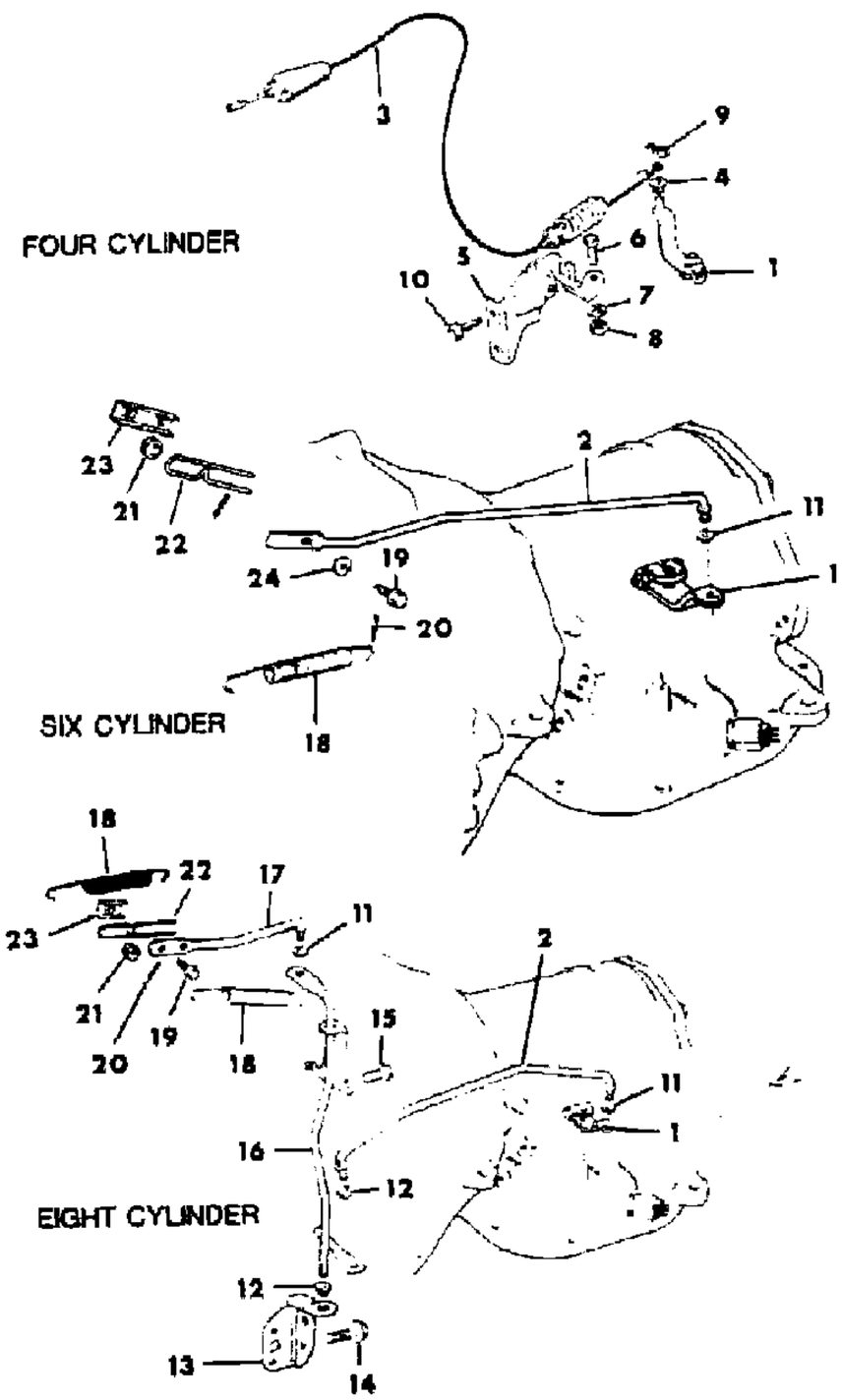

ITEM	PART NUMBER	QTY	BODY	MODEL	DESCRIPTION
18	J319 6286	AR			SPRING
19	S943 2476	1			BOLT
20	J400 5122	AR			PIN, Hitch
21	J322 3656	1			SPACER
22					LINK
	J322 2405	1			1981-86: Six Cylinder
	J536 1056	1			1981: Eight Cylinder
23					CLAMP
	J321 7200	1			1 1/4"
	J324 0123	1			3 1/4"
24	J400 1085	1			WASHER

MODEL CODES

16=Cherokee 2 Dr.(1981-83)	78=Cherokee 4WD-4 Dr.(1984-86)	64=Comanche 2WD-6 Ft. Box(1986)	25=J-10 Truck 7 Ft. Box(1981-84)
17=Cherokee 2 Dr.(1981-83)	85=CJ-5 (1981-83)	66=Comanche 2WD-7 Ft. Box(1986)	26=J10 Truck 8 Ft. Box(1981-86)
73=Cherokee 2WD-2 Dr.(1984-86)	86=CJ-6(1981)	63=Comanche 4WD-6 Ft. Box(1986)	27=J-20 Truck 8 Ft. Box(1981-86)
74=Cherokee 2WD-4 Dr.(1984-86)	87=CJ-7(1981-86)	65=Comanche 4WD-7 Ft. Box(1986)	15=Wagoneer 4 Dr.(1981-83)
18=Cherokee 4 Dr.(1981-83)	88=CJ-8, Scrambler(1981-86)	15=Grand Wagoneer 4 Dr.(1984-86)	75=Wagoneer 4WD-4 Dr.(1984-86)
77=Cherokee 4WD-2 Dr.(1984-86)			

BODY
CJ=CJ-5, CJ-6, CJ-7, CJ-8, Scrambler(1981-86)
MJ=Comanche Pickup(1986)

STYLES
SJ=Wagoneer(1981-83), Grand Wagoneer(1984-86), Cherokee(1981-83), J-10, J-20(1981-86)
XJ=Wagoneer(1984-86), Cherokee(1984-86)

AR = Use as Required - = Non Illustrated Part P.A.R. = Paint as Required

« RETURN TO GROUP INDEX

SPEED CONTROL, ENGINE COMPARTMENT COMPONENTS 1982-86 SIX CYLINDER CJ-5,7,8, SCRAMBLER
Figure 14-2200

81J14 2200 A

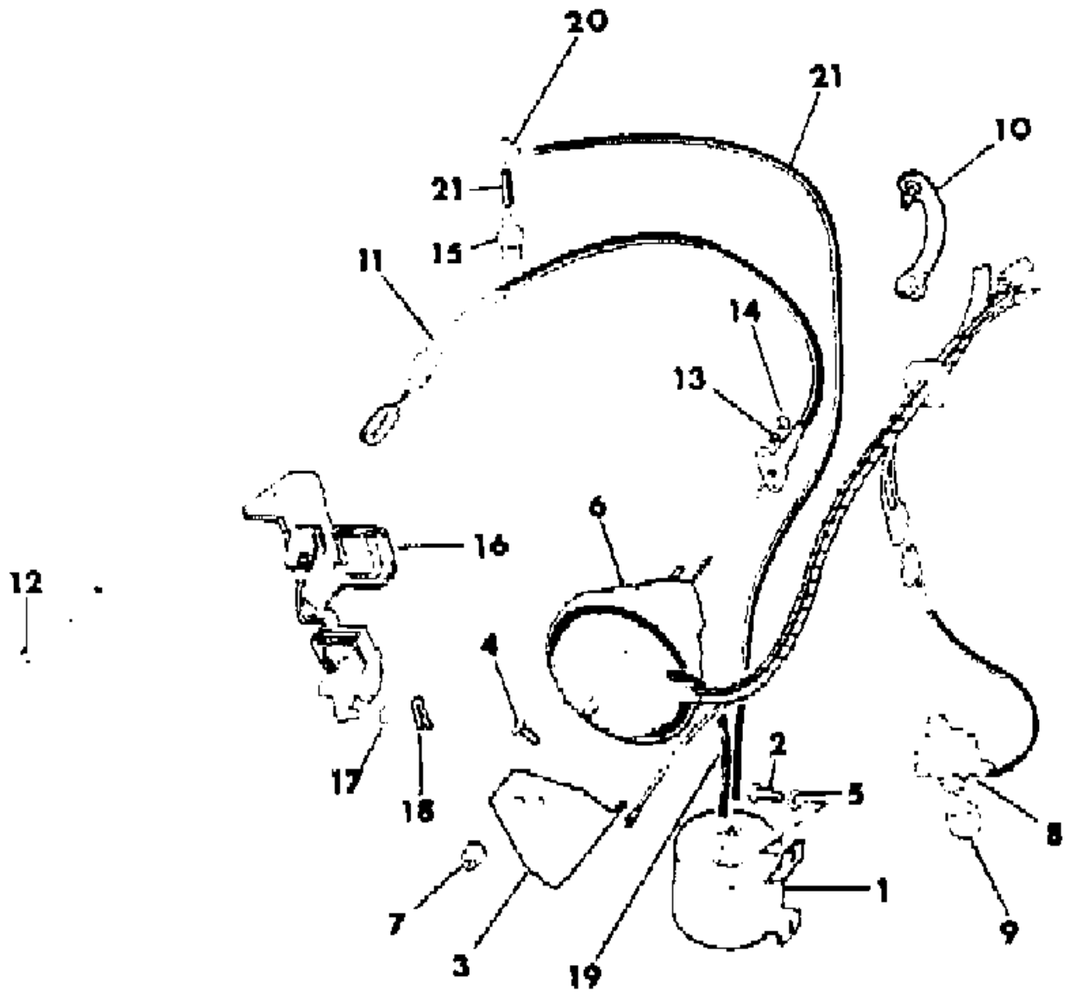

ITEM	PART NUMBER	QTY	BODY	MODEL	DESCRIPTION
1					RESERVOIR, Vacuum
	J323 2991	1			1982
	5300 1068	1			1983-86
2	J942 6241	2			SCREW
3	J575 8958	1			BRACKET
4	J027 3573	2			SCREW
5	J012 0380	1			WASHER, Lock
6	J576 1988	1			SERVO, Cruise Control
7	J941 6918	1			NUT
8	J813 0465	1			GENERATOR, Cruise Control ***
9	8350 1453	1			ADAPTER, Cruise Control Generator
10	J400 1716	2			STRAP
11					CABLE
	J575 8627	1			1982
	J324 2185	1			1983-86
12	J324 0407	1			CHAIN, 1982 ***
13	S013 1044	2			WASHER
14	S013 4530	2			NUT
15	J321 5574	1			FITTING
16	J536 2728	1			BRACKET
17	J044 6152	1			WASHER
18	J400 5758	1			CLIP
19	J812 5812	AR			HOSE, Bulk
20	J097 5940	1			TEE
21	8330 0080	1			HOSE, Bulk

MODEL CODES

16=Cherokee 2 Dr.(1981-83)
17=Cherokee 2 Dr.(1981-83)
73=Cherokee 2WD-2 Dr.(1984-86)
74=Cherokee 2WD-4 Dr.(1984-86)
18=Cherokee 4 Dr.(1981-83)
77=Cherokee 4WD-2 Dr.(1984-86)
78=Cherokee 4WD-4 Dr.(1984-86)
85=CJ-5 (1981-83)
86=CJ-6(1981)
87=CJ-7(1981-86)
88=CJ-8, Scrambler(1981-86)
64=Comanche 2WD-6 Ft. Box(1986)
66=Comanche 2WD-7 Ft. Box(1986)
63=Comanche 4WD-6 Ft. Box(1986)
65=Comanche 4WD-7 Ft. Box(1986)
15=Grand Wagoneer 4 Dr.(1984-86)
25=J-10 Truck 7 Ft. Box(1981-84)
26=J10 Truck 8 Ft. Box(1981-86)
27=J-20 Truck 8 Ft. Box(1981-86)
15=Wagoneer 4 Dr.(1981-83)
75=Wagoneer 4WD-4 Dr.(1984-86)

BODY
CJ=CJ-5, CJ-6, CJ-7, CJ-8, Scrambler(1981-86)
MJ=Comanche Pickup(1986)

STYLES
SJ=Wagoneer(1981-83), Grand Wagoneer(1984-86), Cherokee(1981-83), J-10, J-20(1981-86)
XJ=Wagoneer(1984-86), Cherokee(1984-86)

AR = Use as Required - = Non Illustrated Part P.A.R. = Paint as Required

« RETURN TO GROUP INDEX

SPEED CONTROL, INSTRUMENT PANEL COMPONENTS 1982-86 SIX CYLINDER CJ-5,7,8, SCRAMBLER
Figure 14-2300

81J14 2300

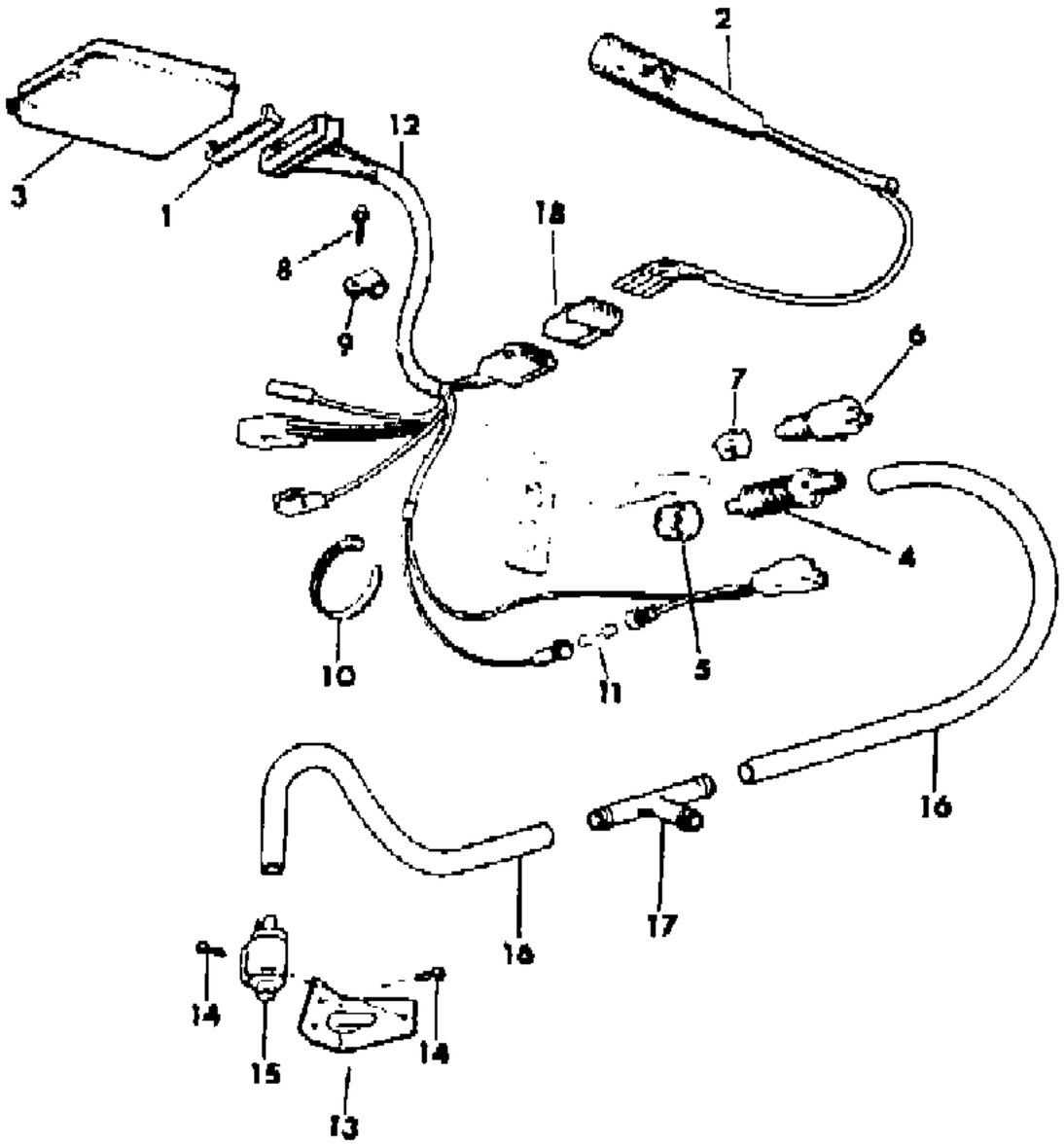

ITEM	PART NUMBER	QTY	BODY	MODEL	DESCRIPTION
1	5300 4158	1			RETAINER, Harness
2	J323 7116	1			LEVER, Turn Signal
3	J323 7117	1			REGULATOR, Cruise Control
4	J323 2970	1			VALVE, Cruise Control Vacuum
5	J400 6789	1			CLIP, Valve
6	J535 2620	1			SWITCH, Stop Lamp
7	J535 2622	1			RETAINER
8	J400 6630	1			SCREW
9	J012 0526	1			CLIP
10	J322 3227	1			STRAP
11	J813 2908	1			FUSE
12					HARNESS
	J575 7442	1			With Automatic Transmission
	J576 1231	1			With Manual Transmission
13					BRACKET
	J536 4008	1			With Manual Transmission
14	J400 4994	3			SCREW
15	J576 1946	1			VALVE, Cruise Control Vacuum
16	J812 5814	AR			HOSE
17	J400 6635	1			TEE
18	J319 8786	1			INSULATOR

MODEL CODES

16=Cherokee 2 Dr.(1981-83)
17=Cherokee 2 Dr.(1981-83)
73=Cherokee 2WD-2 Dr.(1984-86)
74=Cherokee 2WD-4 Dr.(1984-86)
18=Cherokee 4 Dr.(1981-83)
77=Cherokee 4WD-2 Dr.(1984-86)
78=Cherokee 4WD-4 Dr.(1984-86)
85=CJ-5 (1981-83)
86=CJ-6(1981)
87=CJ-7(1981-86)
88=CJ-8, Scrambler(1981-86)
64=Comanche 2WD-6 Ft. Box(1986)
66=Comanche 2WD-7 Ft. Box(1986)
63=Comanche 4WD-6 Ft. Box(1986)
65=Comanche 4WD-7 Ft. Box(1986)
15=Grand Wagoneer 4 Dr.(1984-86)
25=J-10 Truck 7 Ft. Box(1981-84)
26=J10 Truck 8 Ft. Box(1981-86)
27=J-20 Truck 8 Ft. Box(1981-86)
15=Wagoneer 4 Dr.(1981-83)
75=Wagoneer 4WD-4 Dr.(1984-86)

BODY
CJ=CJ-5, CJ-6, CJ-7, CJ-8, Scrambler(1981-86)
MJ=Comanche Pickup(1986)

STYLES
SJ=Wagoneer(1981-83), Grand Wagoneer(1984-86), Cherokee(1981-83), J-10, J-20(1981-86)
XJ=Wagoneer(1984-86), Cherokee(1984-86)

AR = Use as Required - = Non Illustrated Part P.A.R. = Paint as Required

« RETURN TO GROUP INDEX

PUMP ASSEMBLY, INJECTION 1981-85 ISUZU DIESEL, EXPORT CJ-5,6,7,8
Figure 14-2400

81J14 2400

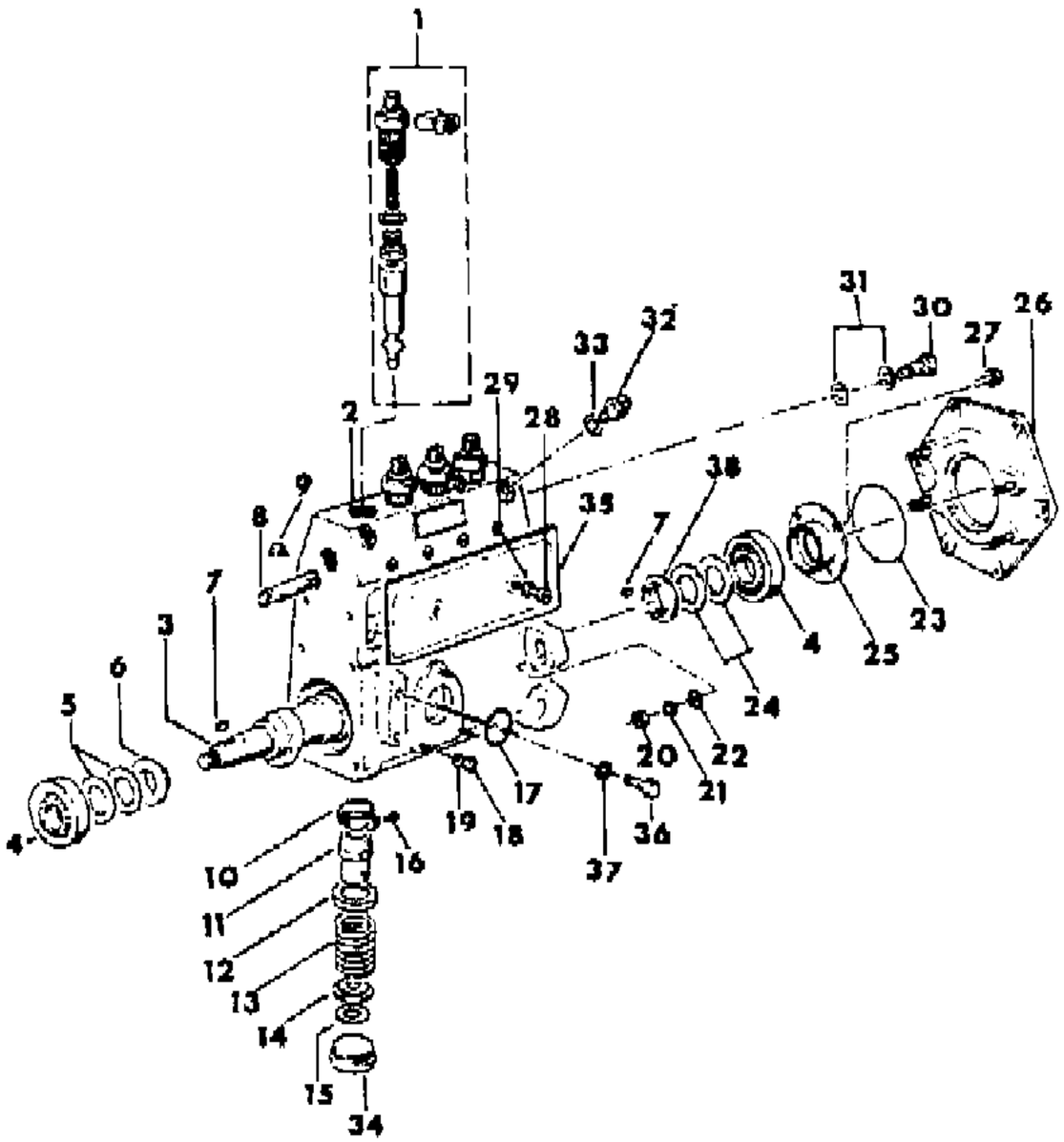

ITEM	PART NUMBER	QTY	BODY	MODEL	DESCRIPTION
1	J806 0348	1			PUMP ASSY, Injection ***
2	J806 0349	1			HOUSING
3	J806 0371	1			CAMSHAFT ***
4	J806 0002	2			BEARING
5					SHIM
	J806 0464	AR			.10mm
	J806 0465	AR			.12mm
	J806 0466	AR			.16mm
	J806 0467	AR			.18mm
	J806 0579	AR			.30mm
	J806 0468	AR			.50mm
	J806 0367	AR			.70mm
	J806 0366	AR			1.00mm
	J806 0368	AR			1.40mm
6	J806 0469	2			RING
7	J806 0461	2			KEY
8	J806 0373	1			RACK ***
9	J806 0375	1			SCREW
10	J806 0471	4			GEAR ***
11	J806 0470	4			SLEEVE
12	J806 0480	4			SEAT, Spring ***
13	J806 0478	4			SPRING
14	J806 0481	4			SEAT, Spring ***
15					SHIM
	J806 0369	AR			.20mm
	J806 0370	AR			.25mm
	J806 0362	AR			.30mm
	J806 0592	AR			.35mm
	J806 0363	AR			.40mm
	J806 0365	AR			.45mm
	J806 0364	AR			.50mm
	J806 0357	AR			.55mm
	J806 0358	AR			.65mm
	J806 0359	AR			.75mm
	J806 0360	AR			.85mm
	J806 0483	AR			.95mm
	J806 0484	AR			1.05mm
	J806 0353	AR			1.10mm
	J806 0485	AR			1.15mm

MODEL CODES

16=Cherokee 2 Dr.(1981-83)
17=Cherokee 2 Dr.(1981-83)
73=Cherokee 2WD-2 Dr.(1984-86)
74=Cherokee 2WD-4 Dr.(1984-86)
18=Cherokee 4 Dr.(1981-83)
77=Cherokee 4WD-2 Dr.(1984-86)
78=Cherokee 4WD-4 Dr.(1984-86)
85=CJ-5 (1981-83)
86=CJ-6(1981)
87=CJ-7(1981-86)
88=CJ-8, Scrambler(1981-86)
64=Comanche 2WD-6 Ft. Box(1986)
66=Comanche 2WD-7 Ft. Box(1986)
63=Comanche 4WD-6 Ft. Box(1986)
65=Comanche 4WD-7 Ft. Box(1986)
15=Grand Wagoneer 4 Dr.(1984-86)
25=J-10 Truck 7 Ft. Box(1981-84)
26=J10 Truck 8 Ft. Box(1981-86)
27=J-20 Truck 8 Ft. Box(1981-86)
15=Wagoneer 4 Dr.(1981-83)
75=Wagoneer 4WD-4 Dr.(1984-86)

BODY
CJ=CJ-5, CJ-6, CJ-7, CJ-8, Scrambler(1981-86)
MJ=Comanche Pickup(1986)

STYLES
SJ=Wagoneer(1981-83), Grand Wagoneer(1984-86), Cherokee(1981-83), J-10, J-20(1981-86)
XJ=Wagoneer(1984-86), Cherokee(1984-86)

AR = Use as Required - = Non Illustrated Part P.A.R. = Paint as Required

PUMP ASSEMBLY, INJECTION 1981-85 ISUZU DIESEL, EXPORT CJ-5,6,7,8
Figure 14-2400

81J14 2400

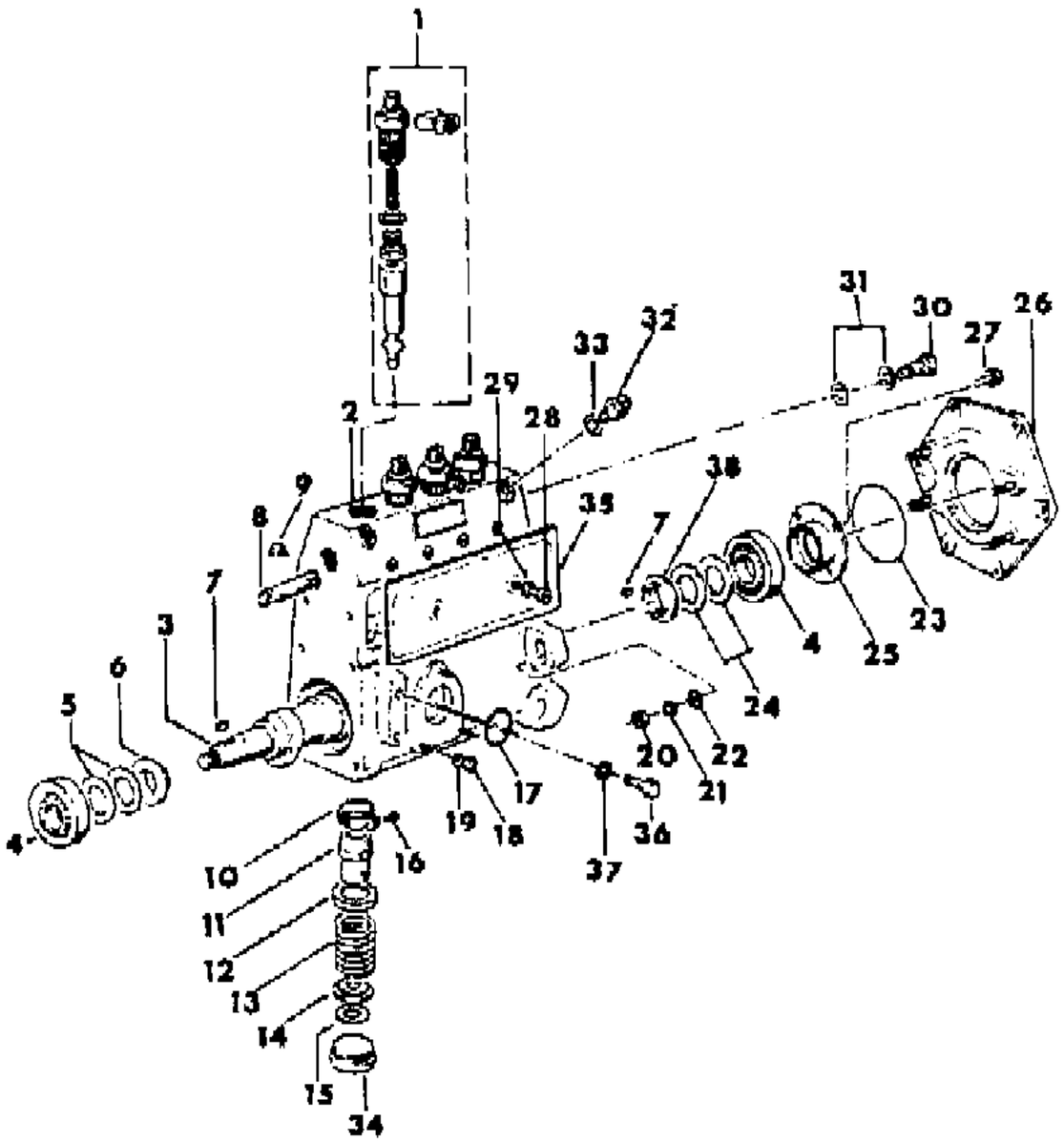

ITEM	PART NUMBER	QTY	BODY	MODEL	DESCRIPTION
	J806 0354	AR			1.20mm
	J806 0486	AR			1.25mm
	J806 0355	AR			1.30mm
	J806 0356	AR			1.40mm
16	J806 0479	4			SCREW
17	J806 0102	1			O-RING
18	J806 0394	3			NUT
19	J806 0063	3			WASHER, Lock
20	J806 0374	4			NUT
21	J806 0575	4			WASHER, Lock
22	J806 0072	4			WASHER, Plain
23	J806 0152	1			O-RING
24	J806 0072	4			WASHER
25	J806 0372	1			COVER
26	J806 0417	1			BRACKET
27	J806 0008	4			BOLT
28	J806 0352	2			SCREW
29	J806 0458	2			GASKET
30	J806 0143	1			BOLT, Eye
31	J806 0412	2			GASKET
32	J806 0361	2			BOLT
33	J806 0376	2			GASKET
34	J806 0456	4			PLUG
35	J806 0350	1			COVER
36	J806 0118	1			BOLT, Eye
37	J806 0377	1			GASKET
38	J806 0469	2			RING

MODEL CODES

16=Cherokee 2 Dr.(1981-83)
17=Cherokee 2 Dr.(1981-83)
73=Cherokee 2WD-2 Dr.(1984-86)
74=Cherokee 2WD-4 Dr.(1984-86)
18=Cherokee 4 Dr.(1981-83)
77=Cherokee 4WD-2 Dr.(1984-86)
78=Cherokee 4WD-4 Dr.(1984-86)
85=CJ-5 (1981-83)
86=CJ-6(1981)
87=CJ-7(1981-86)
88=CJ-8, Scrambler(1981-86)
64=Comanche 2WD-6 Ft. Box(1986)
66=Comanche 2WD-7 Ft. Box(1986)
63=Comanche 4WD-6 Ft. Box(1986)
65=Comanche 4WD-7 Ft. Box(1986)
15=Grand Wagoneer 4 Dr.(1984-86)
25=J-10 Truck 7 Ft. Box(1981-84)
26=J10 Truck 8 Ft. Box(1981-86)
27=J-20 Truck 8 Ft. Box(1981-86)
15=Wagoneer 4 Dr.(1981-83)
75=Wagoneer 4WD-4 Dr.(1984-86)

BODY
CJ=CJ-5, CJ-6, CJ-7, CJ-8, Scrambler(1981-86)
MJ=Comanche Pickup(1986)

STYLES
SJ=Wagoneer(1981-83), Grand Wagoneer(1984-86), Cherokee(1981-83), J-10, J-20(1981-86)
XJ=Wagoneer(1984-86), Cherokee(1984-86)

AR = Use as Required - = Non Illustrated Part P.A.R. = Paint as Required

PUMP, FUEL INJECTION FEED 1981-85 ISUZU DIESEL, EXPORT CJ-5,6,7,8
Figure 14-2500

81J14 2500

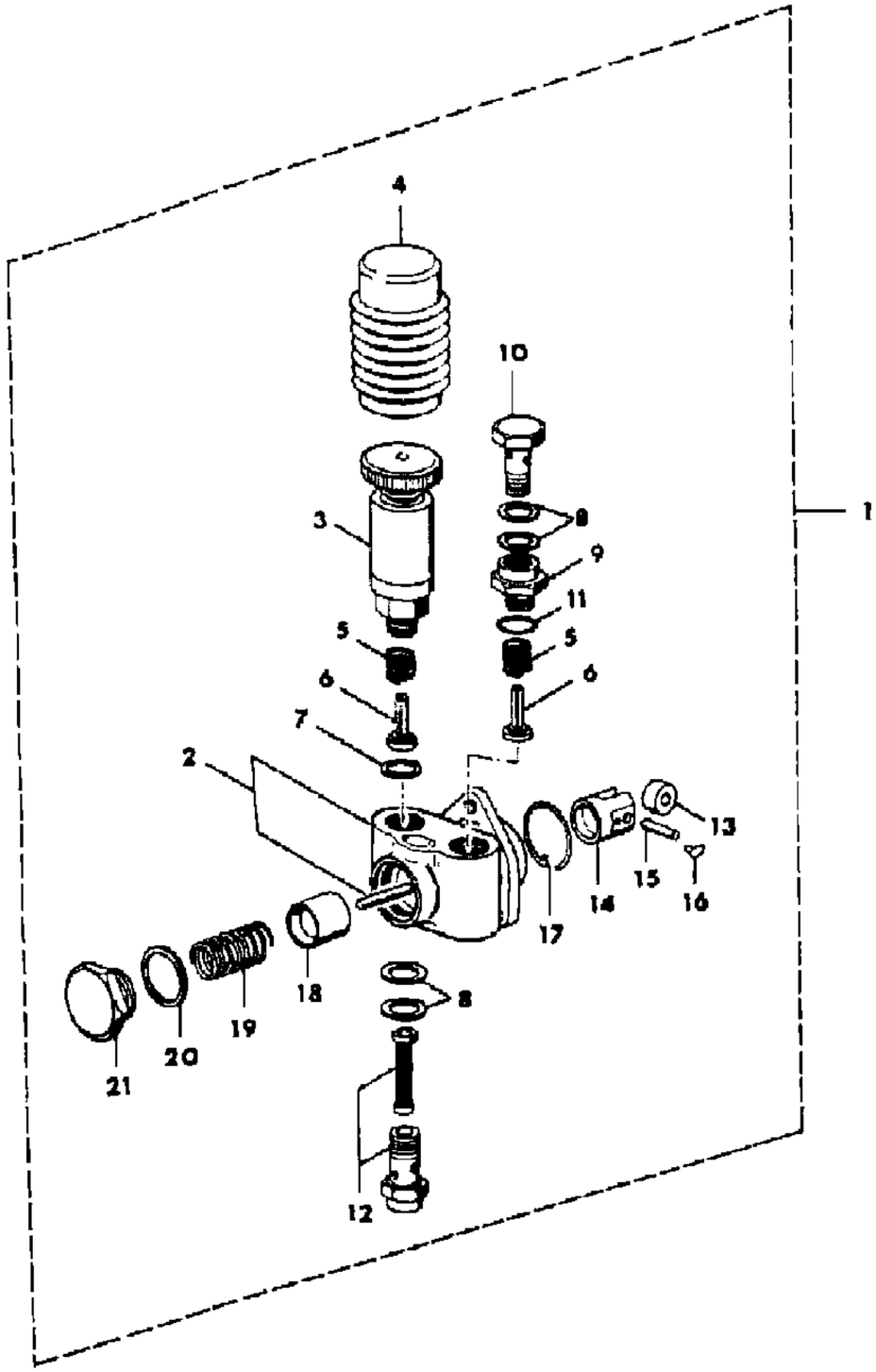

ITEM	PART NUMBER	QTY	BODY	MODEL	DESCRIPTION
1	J806 0410	1			PUMP ASSY, Injection ***
2	J806 0554	1			HOUSING
3	J806 0553	1			PUMP, Priming
4	J806 0558	1			COVER
5	J806 0552	2			SPRING
6	J806 0551	2			VALVE
7	J806 0557	1			GASKET
8	J806 0412	4			GASKET
9	J806 0414	1			ADAPTER
10	J806 0143	1			BOLT
11	J806 0103	1			O-RING
12	J806 0144	1			SLEEVE PACKAGE ***
13	J806 0549	1			ROLLER
14	J806 0411	1			TAPPET ***
15	J806 0550	1			PIN
16	J806 0413	2			GUIDE
17	J806 0556	1			RING, Snap
18	J806 0547	1			PISTON ***
19	J806 0548	1			SPRING
20	J806 0559	1			GASKET
21	J806 0555	1			PLUG

MODEL CODES
16=Cherokee 2 Dr.(1981-83)
17=Cherokee 2 Dr.(1981-83)
73=Cherokee 2WD-2 Dr.(1984-86)
74=Cherokee 2WD-4 Dr.(1984-86)
18=Cherokee 4 Dr.(1981-83)
77=Cherokee 4WD-2 Dr.(1984-86)
78=Cherokee 4WD-4 Dr.(1984-86)
85=CJ-5 (1981-83)
86=CJ-6(1981)
87=CJ-7(1981-86)
88=CJ-8, Scrambler(1981-86)
64=Comanche 2WD-6 Ft. Box(1986)
66=Comanche 2WD-7 Ft. Box(1986)
63=Comanche 4WD-6 Ft. Box(1986)
65=Comanche 4WD-7 Ft. Box(1986)
15=Grand Wagoneer 4 Dr.(1984-86)
25=J-10 Truck 7 Ft. Box(1981-84)
26=J10 Truck 8 Ft. Box(1981-86)
27=J-20 Truck 8 Ft. Box(1981-86)
15=Wagoneer 4 Dr.(1981-83)
75=Wagoneer 4WD-4 Dr.(1984-86)

BODY
CJ=CJ-5, CJ-6, CJ-7, CJ-8, Scrambler(1981-86)
MJ=Comanche Pickup(1986)

STYLES
SJ=Wagoneer(1981-83), Grand Wagoneer(1984-86), Cherokee(1981-83), J-10, J-20(1981-86)
XJ=Wagoneer(1984-86), Cherokee(1984-86)

AR = Use as Required - = Non Illustrated Part P.A.R. = Paint as Required

« RETURN TO GROUP INDEX

GOVERNOR, FUEL INJECTION 1981-85 ISUZU DIESEL, EXPORT CJ-5,6,7,8
Figure 14-2600

81J14 2600

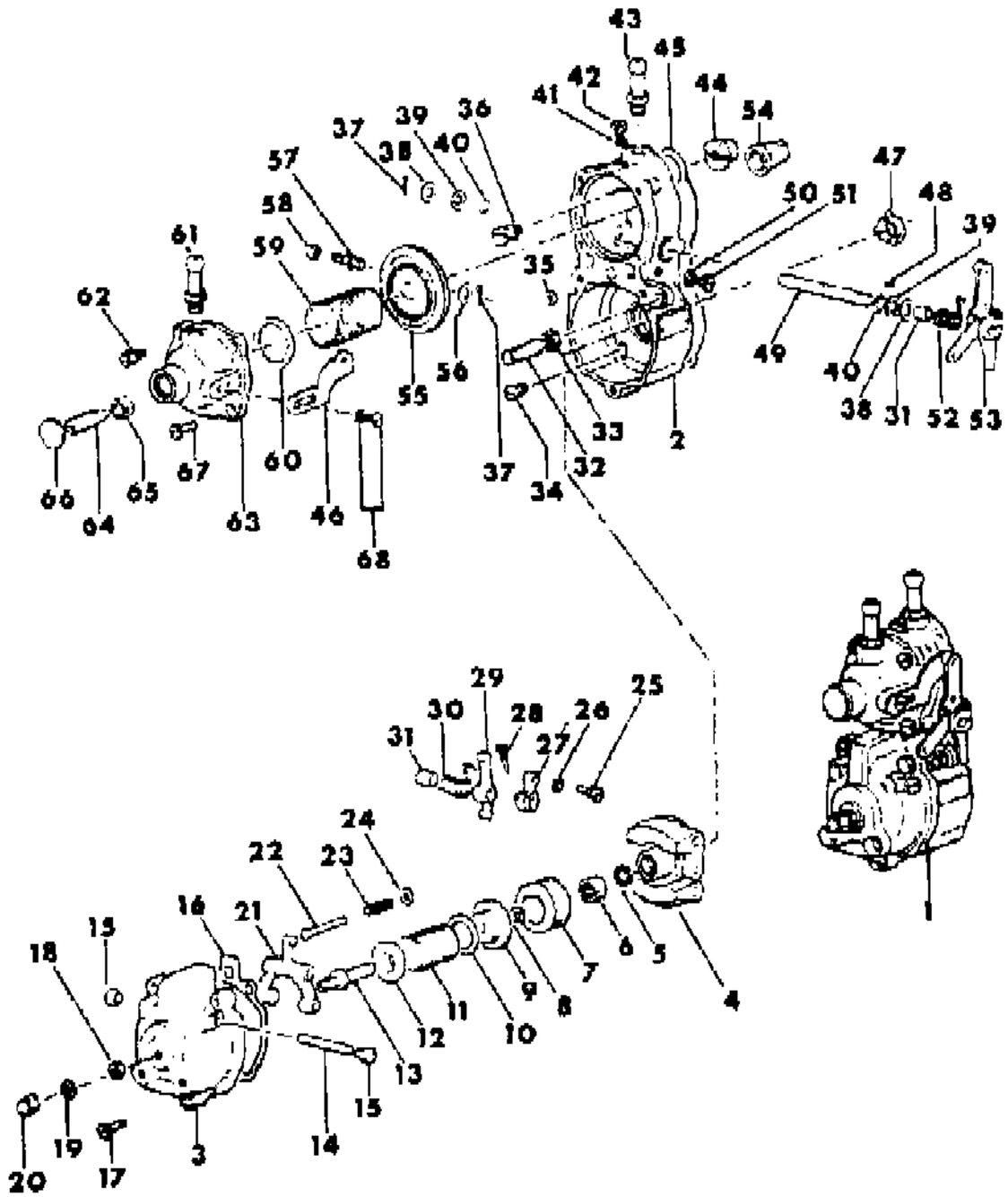

ITEM	PART NUMBER	QTY	BODY	MODEL	DESCRIPTION
1	J806 0378	1			GOVERNOR ASSY ***
2	J806 0379	1			HOUSING
3	J806 0494	1			COVER
4	J806 0517	1			WEIGHT, Governor ***
5	J806 0396	1			WASHER, Lock
6	J806 0574	1			NUT
7	J806 0504	1			SLEEVE
8	J806 0527	1			RING, Snap
9	J806 0529	1			SEAT, Spring ***
10	J806 0387	AR			SHIM
	J806 0388	AR			SHIM
11	J806 0392	1			SPRING
12	J806 0565	1			SEAT, Spring ***
13	J806 0391	1			SCREW
14	J806 0496	1			PIN
15	J806 0528	2			SCREW
16	J806 0390	1			GASKET
17	J806 0389	5			BOLT
18	J806 0576	1			NUT
19	J806 0092	1			GASKET
20	J806 0505	1			NUT
21	J806 0381	1			FORK ***
22					PUSHROD ***
	J806 0515	1			48.0mm
	J806 0508	1			48.5mm
	J806 0518	1			49.0mm
	J806 0509	1			49.5mm
	J806 0516	1			50.0mm
	J806 0514	1			50.5mm
	J806 0400	1			51.0mm
	J806 0401	1			51.5mm
	J806 0402	1			52.0mm
23	J806 0488	1			SPRING
24	J806 0573	1			WASHER
25	J806 0572	1			SCREW
26	J806 0562	1			WASHER, Spring
27	J806 0493	1			LEVER
28	J806 0507	1			BOLT
29	J806 0492	1			LEVER

MODEL CODES

16=Cherokee 2 Dr.(1981-83)
17=Cherokee 2 Dr.(1981-83)
73=Cherokee 2WD-2 Dr.(1984-86)
74=Cherokee 2WD-4 Dr.(1984-86)
18=Cherokee 4 Dr.(1981-83)
77=Cherokee 4WD-2 Dr.(1984-86)
78=Cherokee 4WD-4 Dr.(1984-86)
85=CJ-5 (1981-83)
86=CJ-6(1981)
87=CJ-7(1981-86)
88=CJ-8, Scrambler(1981-86)
64=Comanche 2WD-6 Ft. Box(1986)
66=Comanche 2WD-7 Ft. Box(1986)
63=Comanche 4WD-6 Ft. Box(1986)
65=Comanche 4WD-7 Ft. Box(1986)
15=Grand Wagoneer 4 Dr.(1984-86)
25=J-10 Truck 7 Ft. Box(1981-84)
26=J10 Truck 8 Ft. Box(1981-86)
27=J-20 Truck 8 Ft. Box(1981-86)
15=Wagoneer 4 Dr.(1981-83)
75=Wagoneer 4WD-4 Dr.(1984-86)

BODY
CJ=CJ-5, CJ-6, CJ-7, CJ-8, Scrambler(1981-86)
MJ=Comanche Pickup(1986)

STYLES
SJ=Wagoneer(1981-83), Grand Wagoneer(1984-86), Cherokee(1981-83), J-10, J-20(1981-86)
XJ=Wagoneer(1984-86), Cherokee(1984-86)

AR = Use as Required - = Non Illustrated Part P.A.R. = Paint as Required

« RETURN TO GROUP INDEX »

GOVERNOR, FUEL INJECTION 1981-85 ISUZU DIESEL, EXPORT CJ-5,6,7,8
Figure 14-2600

81J14 2600

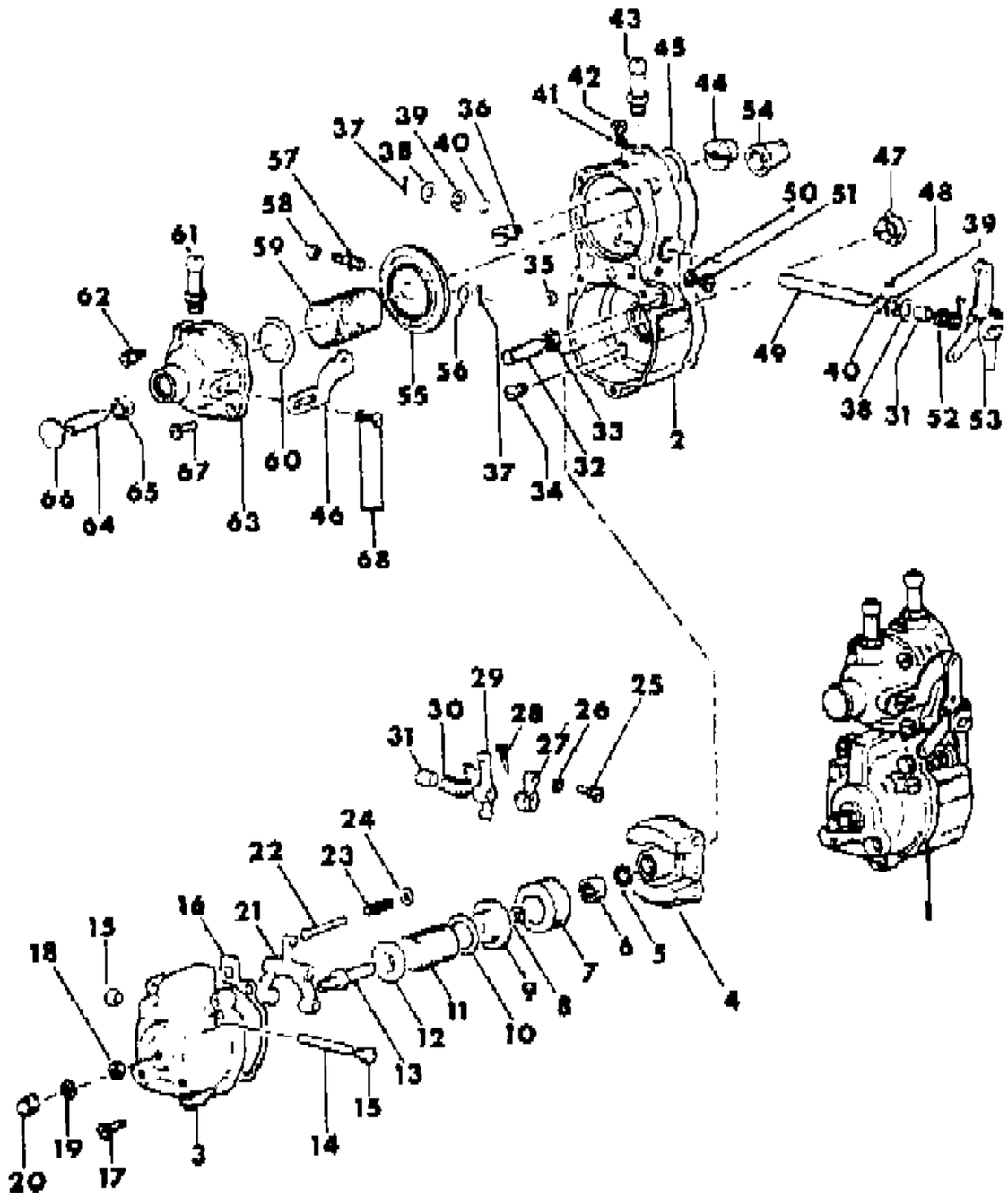

ITEM	PART NUMBER	QTY	BODY	MODEL	DESCRIPTION
30	J806 0489	1			SPRING
31	J806 0503	1			BUSHING
32	J806 0577	1			GUIDE
33	J806 0506	1			NUT
34	J806 0395	1			BOLT
35	J806 0525	1			SEAL, Oil
36	J806 0010	1			BOLT
37	J806 0511	1			PIN, Split
38	J806 0560	AR			WASHER
	J806 0561	AR			WASHER
39	J806 0563	1			WASHER
40	J806 0524	2			O-RING
41	J806 0498	2			GASKET
42	J806 0403	2			PLUG
43	J806 0502	1			NIPPLE
44	J806 0499	1			ADAPTER
45	J806 0393	1			GASKET
46	J806 0382	1			CLIP
47	J806 0512	1			IMPELLER, Fuel ***
48	J806 0383	1			KEY, Shaft
49	J806 0491	1			SHAFT
50	J806 0498	1			GASKET
51	J806 0403	1			PLUG
52	J806 0490	1			SPRING
53	J806 0497	1			LEVER
54	J806 0482	1			CAP
55	J806 0380	1			DIAPHRAGM
56	J806 0384	1			WASHER
57	J806 0513	1			BOLT
58	J806 0580	1			NUT
59	J806 0495	1			SPRING
60					SHIM
	J806 0522	AR			0.2mm
	J806 0523	AR			0.2mm
	J806 0501	AR			0.5mm
	J806 0519	AR			1.0mm
	J806 0520	AR			1.5mm
	J806 0521	AR			2.0mm
	J806 0397	AR			2.5mm

MODEL CODES
16=Cherokee 2 Dr.(1981-83)
17=Cherokee 2 Dr.(1981-83)
73=Cherokee 2WD-2 Dr.(1984-86)
74=Cherokee 2WD-4 Dr.(1984-86)
18=Cherokee 4 Dr.(1981-83)
77=Cherokee 4WD-2 Dr.(1984-86)
78=Cherokee 4WD-4 Dr.(1984-86)
85=CJ-5 (1981-83)
86=CJ-6(1981)
87=CJ-7(1981-86)
88=CJ-8, Scrambler(1981-86)
64=Comanche 2WD-6 Ft. Box(1986)
66=Comanche 2WD-7 Ft. Box(1986)
63=Comanche 4WD-6 Ft. Box(1986)
65=Comanche 4WD-7 Ft. Box(1986)
15=Grand Wagoneer 4 Dr.(1984-86)
25=J-10 Truck 7 Ft. Box(1981-84)
26=J10 Truck 8 Ft. Box(1981-86)
27=J-20 Truck 8 Ft. Box(1981-86)
15=Wagoneer 4 Dr.(1981-83)
75=Wagoneer 4WD-4 Dr.(1984-86)

BODY
CJ=CJ-5, CJ-6, CJ-7, CJ-8, Scrambler(1981-86)
MJ=Comanche Pickup(1986)

STYLES
SJ=Wagoneer(1981-83), Grand Wagoneer(1984-86), Cherokee(1981-83), J-10, J-20(1981-86)
XJ=Wagoneer(1984-86), Cherokee(1984-86)

AR = Use as Required - = Non Illustrated Part P.A.R. = Paint as Required

81J14 2600

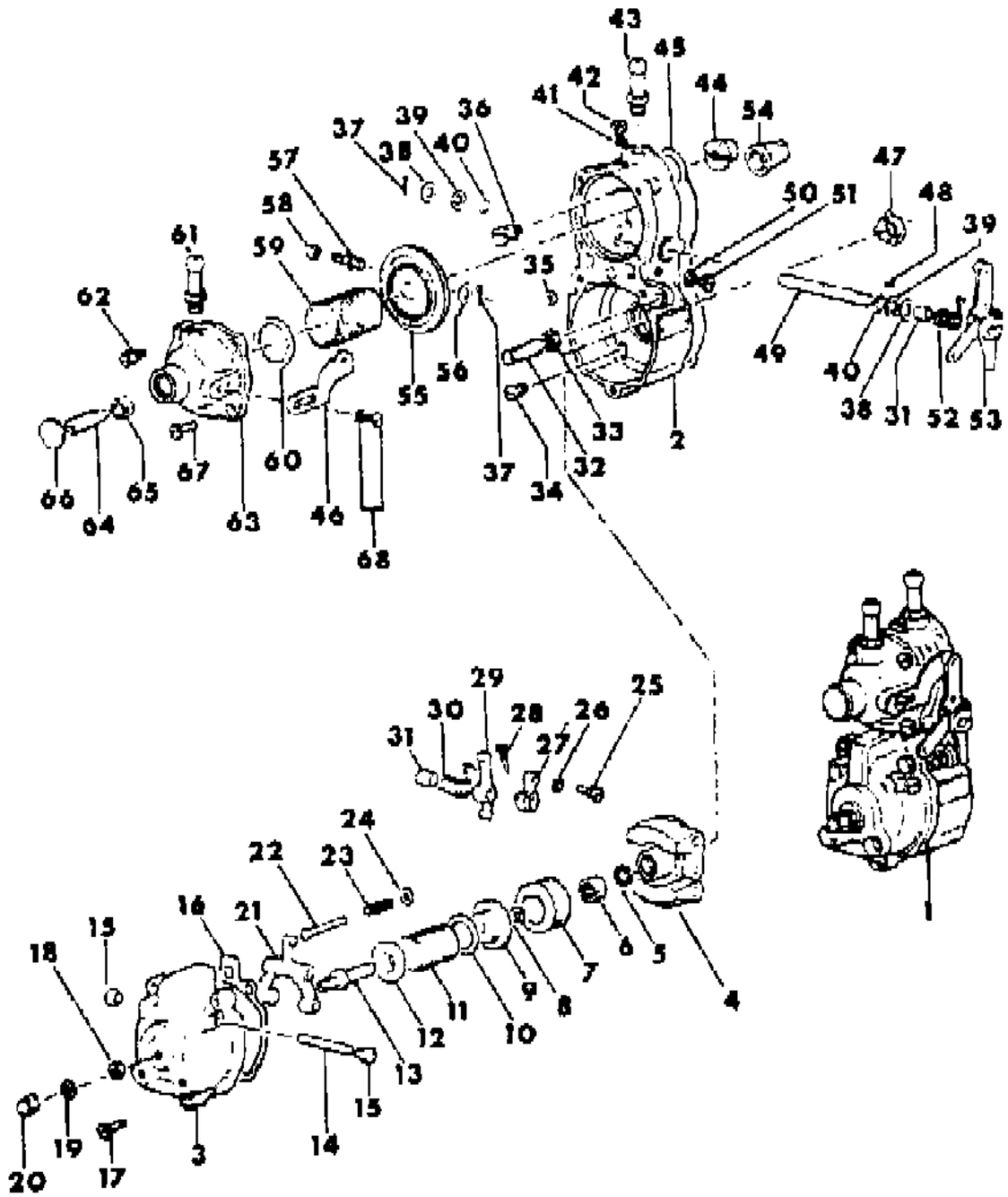

ITEM	PART NUMBER	QTY	BODY	MODEL	DESCRIPTION
	J806 0398	AR			3.0mm
61	J806 0510	1			NIPPLE
62	J806 0399	3			BOLT
63	J806 0487	1			COVER
64	J806 0386	1			GUIDE
65	J806 0500	1			NUT, Lock
66	J806 0586	1			PLUG
67	J806 0385	1			BOLT
68	J806 0578	1			SCREW

MODEL CODES
16=Cherokee 2 Dr.(1981-83)
17=Cherokee 2 Dr.(1981-83)
73=Cherokee 2WD-2 Dr.(1984-86)
74=Cherokee 2WD-4 Dr.(1984-86)
18=Cherokee 4 Dr.(1981-83)
77=Cherokee 4WD-2 Dr.(1984-86)
78=Cherokee 4WD-4 Dr.(1984-86)
85=CJ-5 (1981-83)
86=CJ-6(1981)
87=CJ-7(1981-86)
88=CJ-8, Scrambler(1981-86)
64=Comanche 2WD-6 Ft. Box(1986)
66=Comanche 2WD-7 Ft. Box(1986)
63=Comanche 4WD-6 Ft. Box(1986)
65=Comanche 4WD-7 Ft. Box(1986)
15=Grand Wagoneer 4 Dr.(1984-86)
25=J-10 Truck 7 Ft. Box(1981-84)
26=J10 Truck 8 Ft. Box(1981-86)
27=J-20 Truck 8 Ft. Box(1981-86)
15=Wagoneer 4 Dr.(1981-83)
75=Wagoneer 4WD-4 Dr.(1984-86)

BODY
CJ=CJ-5, CJ-6, CJ-7, CJ-8, Scrambler(1981-86)
MJ=Comanche Pickup(1986)

STYLES
SJ=Wagoneer(1981-83), Grand Wagoneer(1984-86), Cherokee(1981-83), J-10, J-20(1981-86)
XJ=Wagoneer(1984-86), Cherokee(1984-86)

AR = Use as Required - = Non Illustrated Part P.A.R. = Paint as Required

TIMER, FUEL INJECTION 1981-85 ISUZU DIESEL, EXPORT CJ-5,6,7,8
Figure 14-2700

81J14 2700

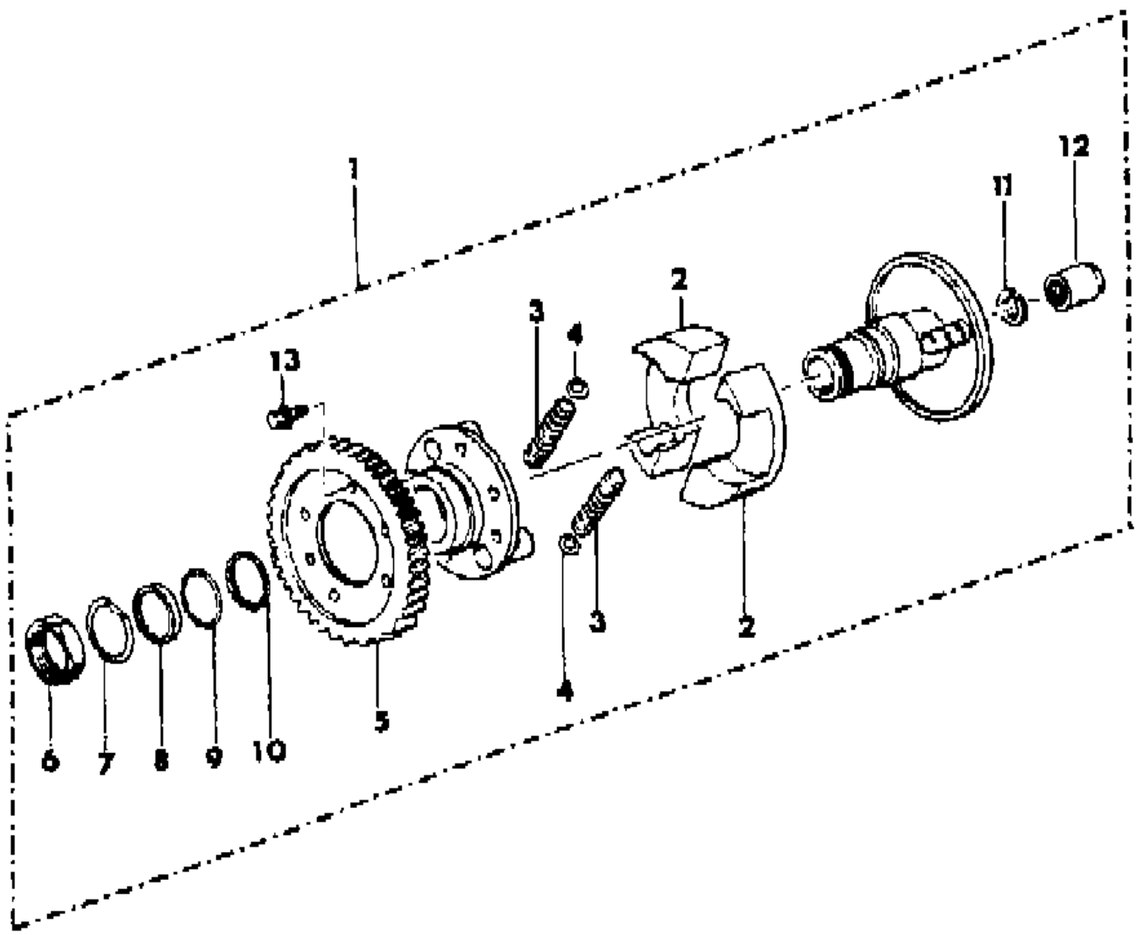

ITEM	PART NUMBER	QTY	BODY	MODEL	DESCRIPTION
1	J806 0404	1			TIMER ASSY, Injection ***
2	J806 0531	2			WEIGHT ***
3	J806 0536	2			SPRING
4					SHIM
	J806 0532	AR			0.10mm
	J806 0407	AR			0.20mm
	J806 0533	AR			0.30mm
	J806 0534	AR			0.50mm
	J806 0408	AR			0.60mm
	J806 0409	AR			1.00mm
5	J806 0235	1			GEAR ***
6	J806 0537	1			NUT
7	J806 0535	1			PLATE, Lock
8	J806 0405	1			WASHER
9					SHIM
	J806 0545	AR			0.10mm
	J806 0538	AR			0.123mm
	J806 0539	AR			0.14mm
	J806 0540	AR			0.16mm
	J806 0541	AR			0.18mm
	J806 0543	AR			0.20mm
	J806 0544	AR			0.30mm
	J806 0542	AR			0.50mm
10	J806 0546	1			WASHER
11	J806 0130	1			WASHER, Lock
12	J806 0351	1			NUT
13	J806 0406	1			BOLT

MODEL CODES

16=Cherokee 2 Dr.(1981-83)
17=Cherokee 2 Dr.(1981-83)
73=Cherokee 2WD-2 Dr.(1984-86)
74=Cherokee 2WD-4 Dr.(1984-86)
18=Cherokee 4 Dr.(1981-83)
77=Cherokee 4WD-2 Dr.(1984-86)
78=Cherokee 4WD-4 Dr.(1984-86)
85=CJ-5 (1981-83)
86=CJ-6(1981)
87=CJ-7(1981-86)
88=CJ-8, Scrambler(1981-86)
64=Comanche 2WD-6 Ft. Box(1986)
66=Comanche 2WD-7 Ft. Box(1986)
63=Comanche 4WD-6 Ft. Box(1986)
65=Comanche 4WD-7 Ft. Box(1986)
15=Grand Wagoneer 4 Dr.(1984-86)
25=J-10 Truck 7 Ft. Box(1981-84)
26=J10 Truck 8 Ft. Box(1981-86)
27=J-20 Truck 8 Ft. Box(1981-86)
15=Wagoneer 4 Dr.(1981-83)
75=Wagoneer 4WD-4 Dr.(1984-86)

BODY
CJ=CJ-5, CJ-6, CJ-7, CJ-8, Scrambler(1981-86)
MJ=Comanche Pickup(1986)

STYLES
SJ=Wagoneer(1981-83), Grand Wagoneer(1984-86), Cherokee(1981-83), J-10, J-20(1981-86)
XJ=Wagoneer(1984-86), Cherokee(1984-86)

AR = Use as Required - = Non Illustrated Part P.A.R. = Paint as Required

« RETURN TO GROUP INDEX

PUMP ASSEMBLY, INJECTION 1986 RENAULT DIESEL, EXPORT CJ-7,8
Figure 14-2800

81J14 2800

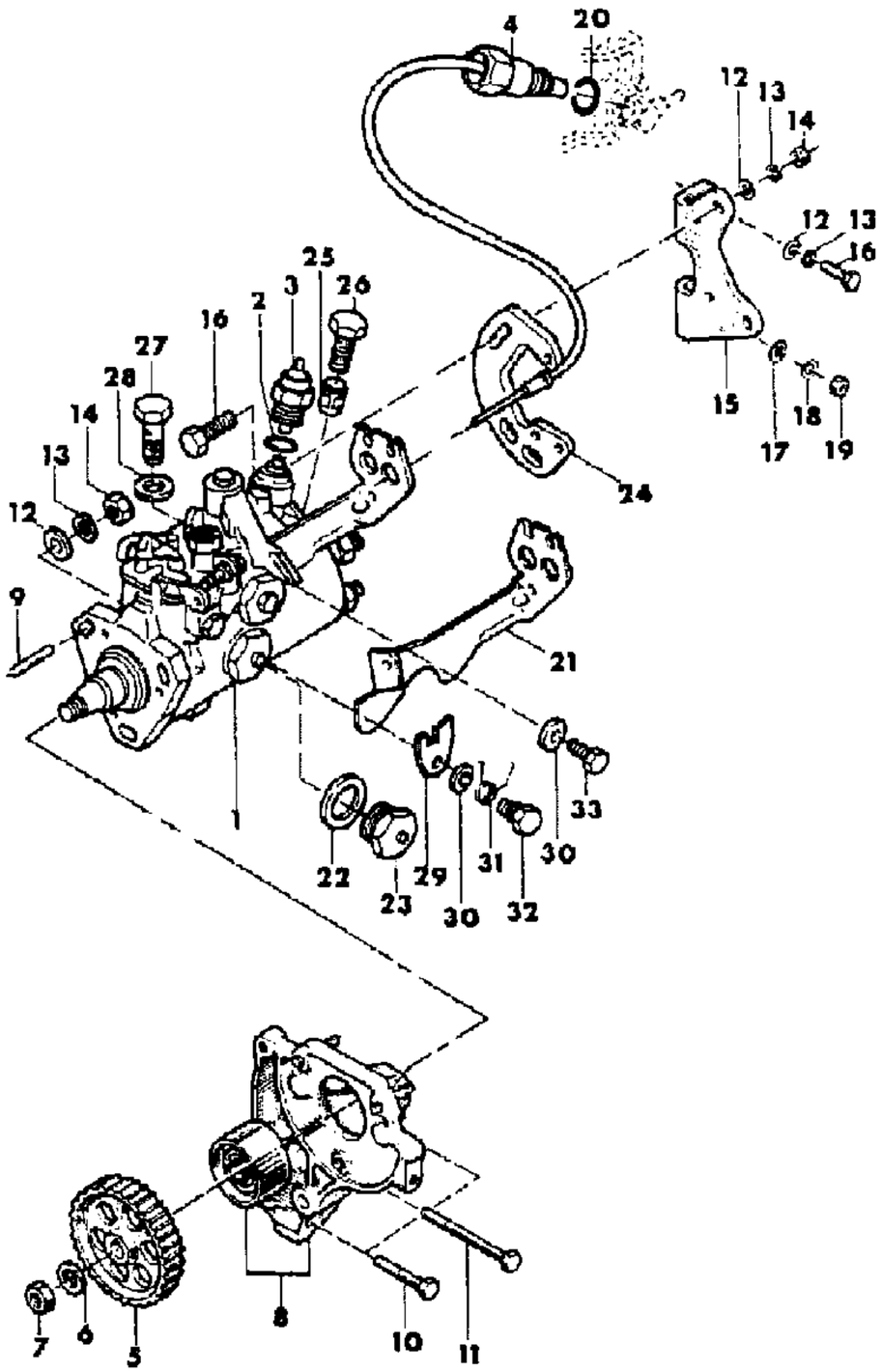

ITEM	PART NUMBER	QTY	BODY	MODEL	DESCRIPTION
1	T071 3428	1			PUMP ASSY, Injection ***
2	T777 7684	1			O-RING
3	T102 5651	1			SOLENOID
4	T070 7655	1			CONTROL
5	T134 9585	1			SPROCKET ***
6	T067 5867	1			WASHER
7	T149 3071	1			NUT
8	T600 2198	1			PULLEY ***
9	T302 7191	3			STUD
10	J420 0438	1			BOLT
11	T300 1196	1			BOLT
12	1150 0255	3			WASHER
13	J012 0214	3			WASHER
14	T149 3047	2			NUT
15	T068 4886	1			SUPPORT
16	T140 5667	1			BOLT
17	T305 3043	1			WASHER
18	T140 2094	1			WASHER
19	T140 5676	1			NUT
20	T306 2021	1			O-RING
21	T102 8219	1			BRACKET
22	T102 7678	1			O-RING
23	T102 7679	1			CAP
24	T103 0197	1			BRACKET
25	T777 7689	1			FILTER
26	T102 5878	1			UNION ***
27	T777 7688	1			UNION ***
28	T100 4929	1			RING
29	T102 8363	1			BRACKET
30	T102 8361	1			WASHER
31	T102 8362	1			SPRING
32	T102 8359	1			BOLT
33	T102 8360	1			BOLT

MODEL CODES
16=Cherokee 2 Dr.(1981-83)
17=Cherokee 2 Dr.(1981-83)
73=Cherokee 2WD-2 Dr.(1984-86)
74=Cherokee 2WD-4 Dr.(1984-86)
18=Cherokee 4 Dr.(1981-83)
77=Cherokee 4WD-2 Dr.(1984-86)
78=Cherokee 4WD-4 Dr.(1984-86)
85=CJ-5 (1981-83)
86=CJ-6(1981)
87=CJ-7(1981-86)
88=CJ-8, Scrambler(1981-86)
64=Comanche 2WD-6 Ft. Box(1986)
66=Comanche 2WD-7 Ft. Box(1986)
63=Comanche 4WD-6 Ft. Box(1986)
65=Comanche 4WD-7 Ft. Box(1986)
15=Grand Wagoneer 4 Dr.(1984-86)
25=J-10 Truck 7 Ft. Box(1981-84)
26=J10 Truck 8 Ft. Box(1981-86)
27=J-20 Truck 8 Ft. Box(1981-86)
15=Wagoneer 4 Dr.(1981-83)
75=Wagoneer 4WD-4 Dr.(1984-86)

BODY
CJ=CJ-5, CJ-6, CJ-7, CJ-8, Scrambler(1981-86)
MJ=Comanche Pickup(1986)

STYLES
SJ=Wagoneer(1981-83), Grand Wagoneer(1984-86), Cherokee(1981-83), J-10, J-20(1981-86)
XJ=Wagoneer(1984-86), Cherokee(1984-86)

AR = Use as Required - = Non Illustrated Part P.A.R. = Paint as Required

« RETURN TO GROUP INDEX

FUEL FILTER AND HOSES 1986 RENAULT DIESEL, EXPORT CJ-7,8
Figure 14-2900

81J14 2900Q

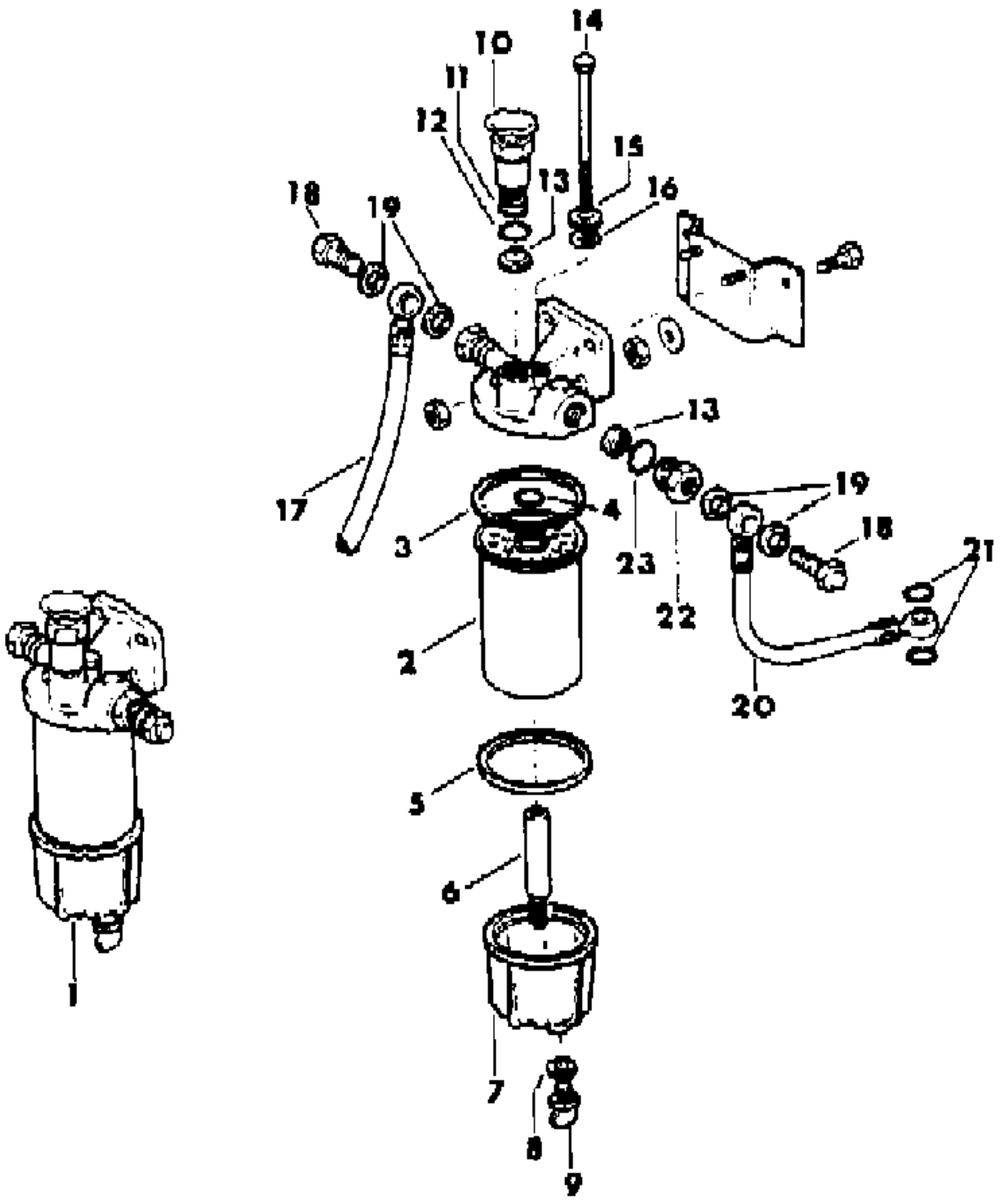

ITEM	PART NUMBER	QTY	BODY	MODEL	DESCRIPTION
1	T072 2358	1			FILTER ASSY, Fuel ***
2	T102 8181	1			ELEMENT, Fuel Filter
3	T102 3930	1			GASKET
4	T527 6400	1			GASKET
5	T102 3931	1			GASKET
6	T102 8189	1			SPACER
7	T103 0269	1			BOWL ***
8	T423 0000	1			WASHER
9	T101 3857	1			DRAINCOCK ***
10	T567 1700	1			PUMP, Priming
11	T102 5176	1			O-RING
12	T567 5700	1			O-RING
13	T005 4900	2			VALVE, Check
14	T103 0271	1			BOLT
15	T102 8183	1			WASHER
16	T471 7000	1			GASKET
17	T068 4001	1			TUBE ASSY ***
18	T567 2400	1			BOLT
19	T066 7527	6			Ring, Sealing ***
20	T071 6593	1			HOSE
21	T069 1178	2			RING, Sealing
22	T102 5179	1			ADAPTER
23	T567 2400	1			O-RING

MODEL CODES

16=Cherokee 2 Dr.(1981-83)
17=Cherokee 2 Dr.(1981-83)
73=Cherokee 2WD-2 Dr.(1984-86)
74=Cherokee 2WD-4 Dr.(1984-86)
18=Cherokee 4 Dr.(1981-83)
77=Cherokee 4WD-2 Dr.(1984-86)
78=Cherokee 4WD-4 Dr.(1984-86)
85=CJ-5 (1981-83)
86=CJ-6(1981)
87=CJ-7(1981-86)
88=CJ-8, Scrambler(1981-86)
64=Comanche 2WD-6 Ft. Box(1986)
66=Comanche 2WD-7 Ft. Box(1986)
63=Comanche 4WD-6 Ft. Box(1986)
65=Comanche 4WD-7 Ft. Box(1986)
15=Grand Wagoneer 4 Dr.(1984-86)
25=J-10 Truck 7 Ft. Box(1981-84)
26=J10 Truck 8 Ft. Box(1981-86)
27=J-20 Truck 8 Ft. Box(1981-86)
15=Wagoneer 4 Dr.(1981-83)
75=Wagoneer 4WD-4 Dr.(1984-86)

BODY
CJ=CJ-5, CJ-6, CJ-7, CJ-8, Scrambler(1981-86)
MJ=Comanche Pickup(1986)

STYLES
SJ=Wagoneer(1981-83), Grand Wagoneer(1984-86), Cherokee(1981-83), J-10, J-20(1981-86)
XJ=Wagoneer(1984-86), Cherokee(1984-86)

AR = Use as Required - = Non Illustrated Part P.A.R. = Paint as Required

« RETURN TO GROUP INDEX

FUEL PUMP AND FILTER 1981-83 GM FOUR CYLINDER CJ-5,6,7,8, SCRAMBLER
Figure 14-3000

81J14 3000

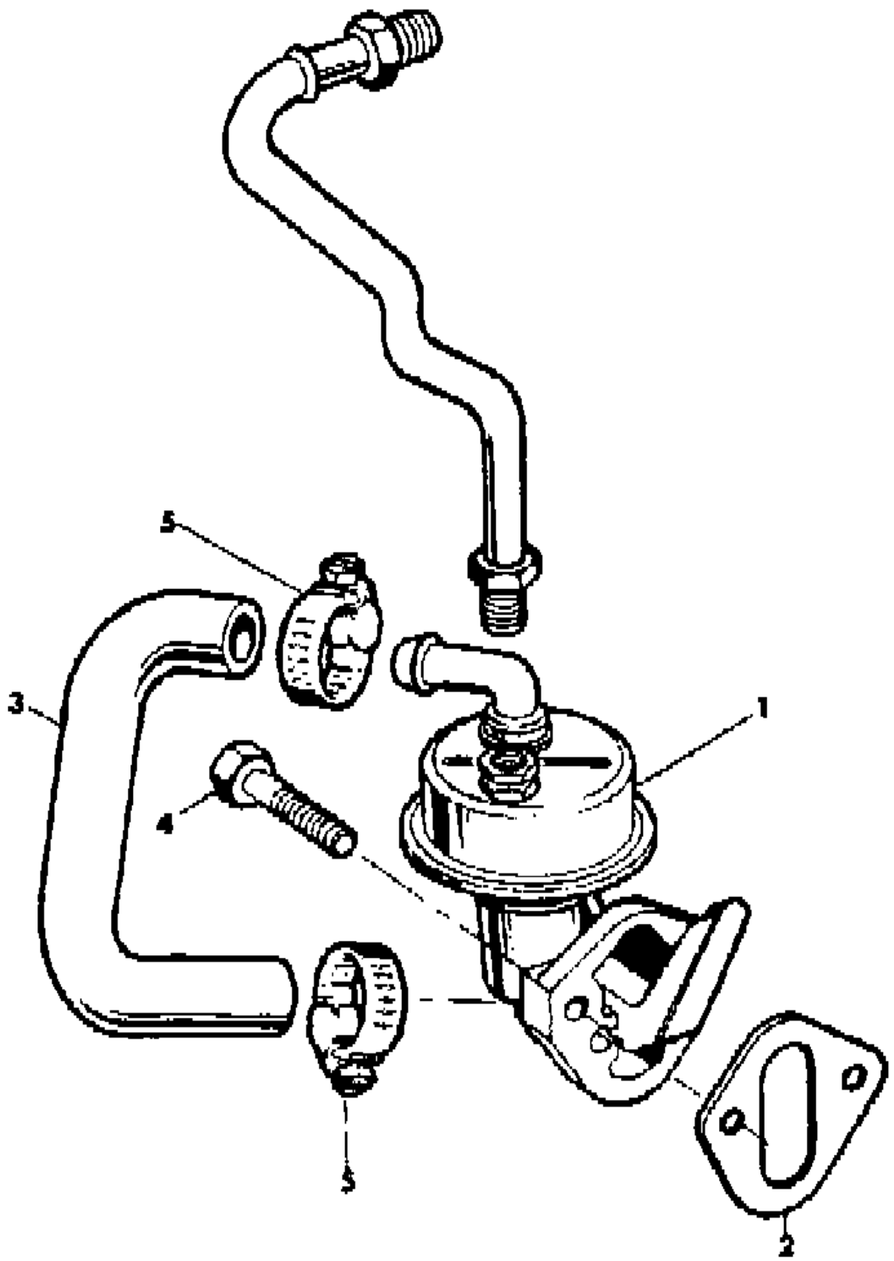

ITEM	PART NUMBER	QTY	BODY	MODEL	DESCRIPTION
1	J813 2364	1			PUMP, Fuel
2	J317 4685	1			GASKET, Fuel Pump
3	J324 0199	1			HOSE
4	S150 0818	2			BOLT
5	J321 3076	2			CLAMP

MODEL CODES

16=Cherokee 2 Dr.(1981-83)	78=Cherokee 4WD-4 Dr.(1984-86)	64=Comanche 2WD-6 Ft. Box(1986)	25=J-10 Truck 7 Ft. Box(1981-84)
17=Cherokee 2 Dr.(1981-83)	85=CJ-5 (1981-83)	66=Comanche 2WD-7 Ft. Box(1986)	26=J10 Truck 8 Ft. Box(1981-86)
73=Cherokee 2WD-2 Dr.(1984-86)	86=CJ-6(1981)	63=Comanche 4WD-6 Ft. Box(1986)	27=J-20 Truck 8 Ft. Box(1981-86)
74=Cherokee 2WD-4 Dr.(1984-86)	87=CJ-7(1981-86)	65=Comanche 4WD-7 Ft. Box(1986)	15=Wagoneer 4 Dr.(1981-83)
18=Cherokee 4 Dr.(1981-83)	88=CJ-8, Scrambler(1981-86)	15=Grand Wagoneer 4 Dr.(1984-86)	75=Wagoneer 4WD-4 Dr.(1984-86)
77=Cherokee 4WD-2 Dr.(1984-86)			

BODY
CJ=CJ-5, CJ-6, CJ-7, CJ-8, Scrambler(1981-86)
MJ=Comanche Pickup(1986)

STYLES
SJ=Wagoneer(1981-83), Grand Wagoneer(1984-86), Cherokee(1981-83), J-10, J-20(1981-86)
XJ=Wagoneer(1984-86), Cherokee(1984-86)

AR = Use as Required - = Non Illustrated Part P.A.R. = Paint as Required

« RETURN TO GROUP INDEX

FUEL PUMP AND FILTER 1983-86 AMC FOUR CYLINDER CJ-5,6,7,8, SCRAMBLER
Figure 14-3100

81J14 3100

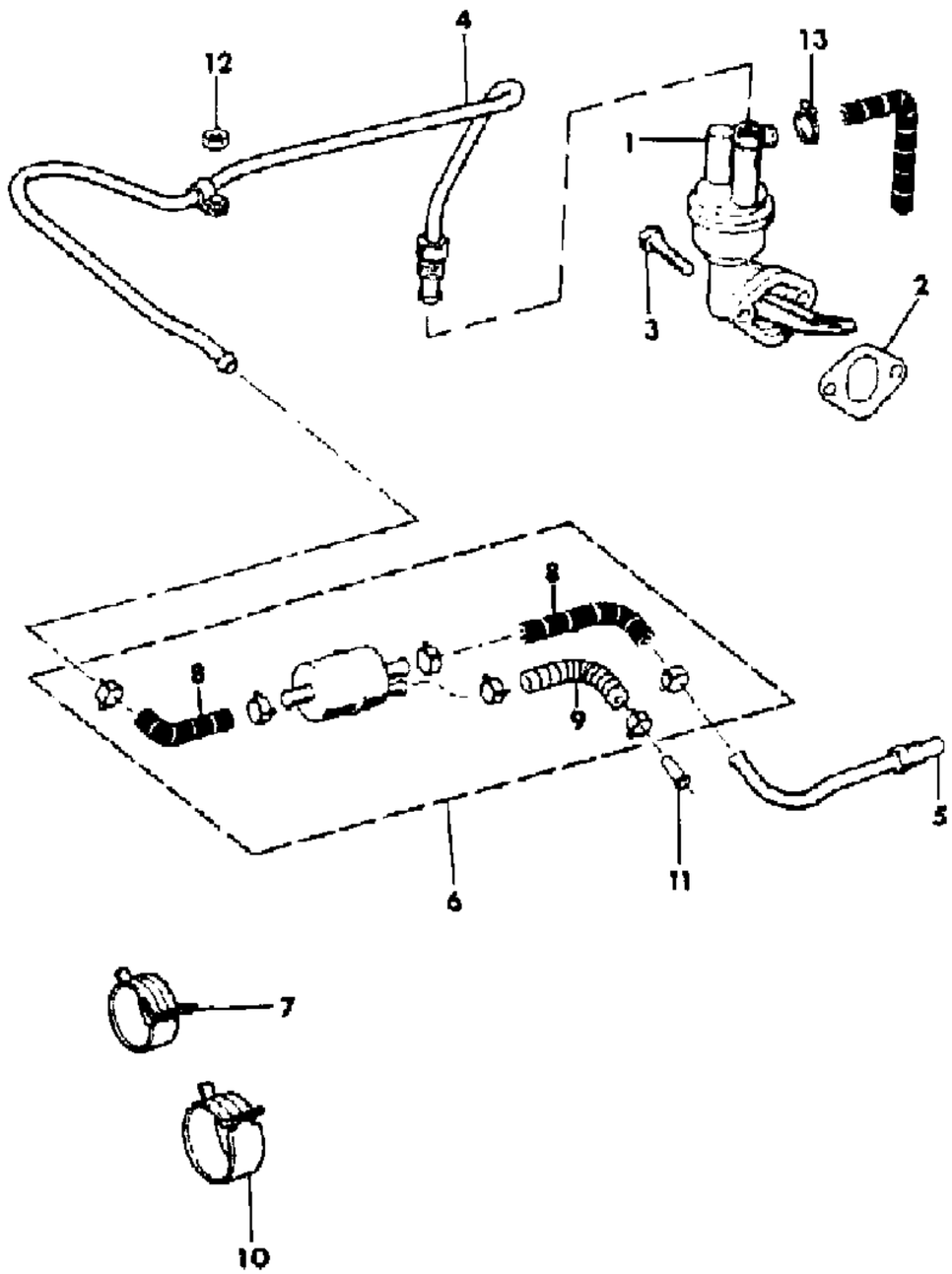

ITEM	PART NUMBER	QTY	BODY	MODEL	DESCRIPTION
1	J322 8191	1			PUMP, Fuel
2	J317 4685	1			GASKET, Fuel Pump
3	J018 0079	2			BOLT
4	3300 1521	1			TUBE
5	3300 1522	1			TUBE
6	J812 9383	1			FILTER PACKAGE, Fuel
7	J322 2900	AR			CLAMP
8	J812 5823	AR			HOSE, Bulk 0.31" I.D.
9	J812 5843	AR			HOSE, Bulk, 0.25" I.D.
10	J318 1643	AR			CLAMP
11	J323 2144	1			NUT
12	J941 6918	1			NUT
13	3300 0785	1			CLAMP

MODEL CODES

16=Cherokee 2 Dr.(1981-83)
17=Cherokee 2 Dr.(1981-83)
73=Cherokee 2WD-2 Dr.(1984-86)
74=Cherokee 2WD-4 Dr.(1984-86)
18=Cherokee 4 Dr.(1981-83)
77=Cherokee 4WD-2 Dr.(1984-86)
78=Cherokee 4WD-4 Dr.(1984-86)
85=CJ-5 (1981-83)
86=CJ-6(1981)
87=CJ-7(1981-86)
88=CJ-8, Scrambler(1981-86)
64=Comanche 2WD-6 Ft. Box(1986)
66=Comanche 2WD-7 Ft. Box(1986)
63=Comanche 4WD-6 Ft. Box(1986)
65=Comanche 4WD-7 Ft. Box(1986)
15=Grand Wagoneer 4 Dr.(1984-86)
25=J-10 Truck 7 Ft. Box(1981-84)
26=J10 Truck 8 Ft. Box(1981-86)
27=J-20 Truck 8 Ft. Box(1981-86)
15=Wagoneer 4 Dr.(1981-83)
75=Wagoneer 4WD-4 Dr.(1984-86)

BODY
CJ=CJ-5, CJ-6, CJ-7, CJ-8, Scrambler(1981-86)
MJ=Comanche Pickup(1986)

STYLES
SJ=Wagoneer(1981-83), Grand Wagoneer(1984-86), Cherokee(1981-83), J-10, J-20(1981-86)
XJ=Wagoneer(1984-86), Cherokee(1984-86)

AR = Use as Required - = Non Illustrated Part P.A.R. = Paint as Required

« RETURN TO GROUP INDEX

FUEL PUMP AND FILTER 1981-86 SIX CYLINDER CJ-5,6,7,8, SCRAMBLER
Figure 14-3200

81J14 3200

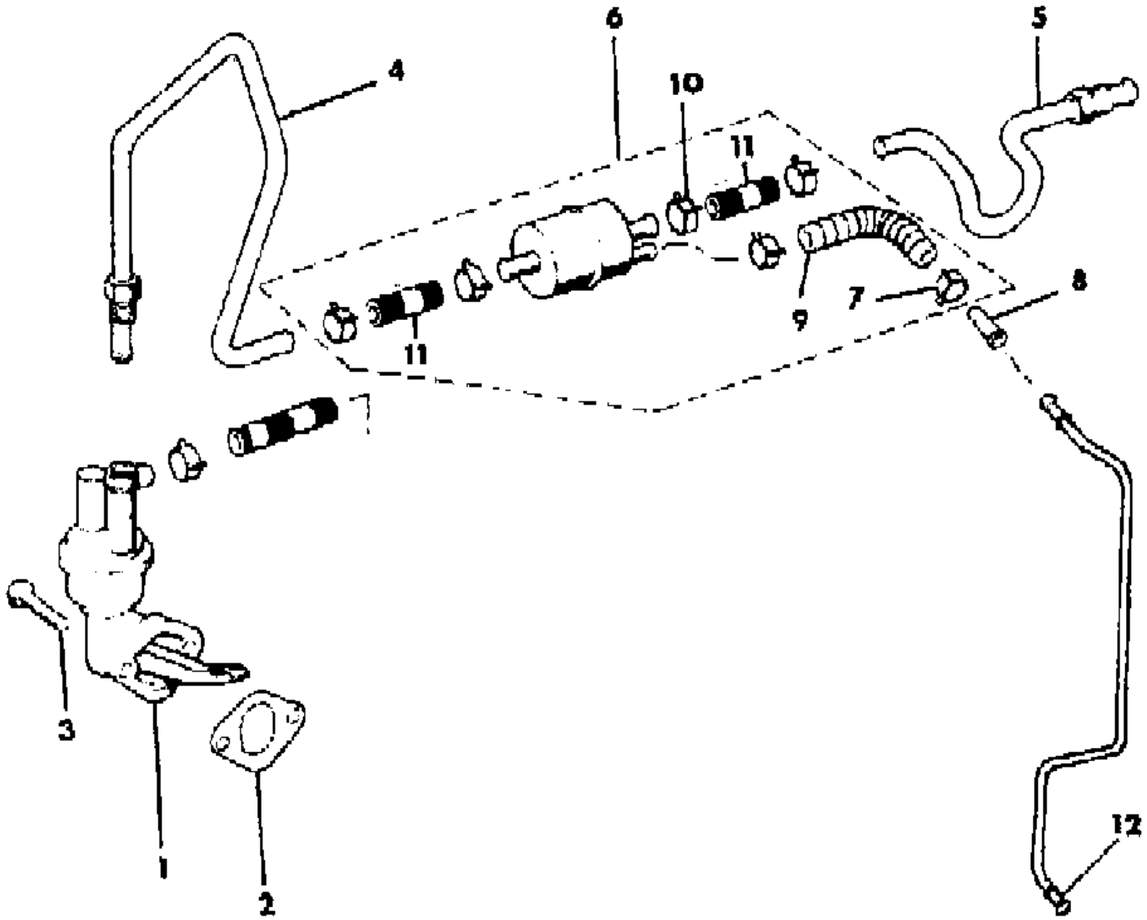

ITEM	PART NUMBER	QTY	BODY	MODEL	DESCRIPTION
1	J322 8191	1			PUMP, Fuel
2	J317 4685	1			GASKET, Fuel Pump
3	J018 0079	2			BOLT
4	5300 5137	1			TUBE, Fuel Supply
5	3300 2618	1			TUBE, Fuel Supply
6	J812 9383	1			FILTER PACKAGE, Fuel
7	J322 2900	AR			CLAMP
8	J323 2144	1			VALVE, Clamp
9	J812 5843	AR			HOSE, Bulk 0.25" I.D.
10	J318 1643	AR			CLAMP
11	J812 5823	AR			HOSE, Bulk, 0.31" I.D.
12	J536 2848	1			TUBE, Fuel Return

MODEL CODES

16=Cherokee 2 Dr.(1981-83)
17=Cherokee 2 Dr.(1981-83)
73=Cherokee 2WD-2 Dr.(1984-86)
74=Cherokee 2WD-4 Dr.(1984-86)
18=Cherokee 4 Dr.(1981-83)
77=Cherokee 4WD-2 Dr.(1984-86)
78=Cherokee 4WD-4 Dr.(1984-86)
85=CJ-5 (1981-83)
86=CJ-6(1981)
87=CJ-7(1981-86)
88=CJ-8, Scrambler(1981-86)
64=Comanche 2WD-6 Ft. Box(1986)
66=Comanche 2WD-7 Ft. Box(1986)
63=Comanche 4WD-6 Ft. Box(1986)
65=Comanche 4WD-7 Ft. Box(1986)
15=Grand Wagoneer 4 Dr.(1984-86)
25=J-10 Truck 7 Ft. Box(1981-84)
26=J10 Truck 8 Ft. Box(1981-86)
27=J-20 Truck 8 Ft. Box(1981-86)
15=Wagoneer 4 Dr.(1981-83)
75=Wagoneer 4WD-4 Dr.(1984-86)

BODY
CJ=CJ-5, CJ-6, CJ-7, CJ-8, Scrambler(1981-86)
MJ=Comanche Pickup(1986)

STYLES
SJ=Wagoneer(1981-83), Grand Wagoneer(1984-86), Cherokee(1981-83), J-10, J-20(1981-86)
XJ=Wagoneer(1984-86), Cherokee(1984-86)

AR = Use as Required - = Non Illustrated Part P.A.R. = Paint as Required

« RETURN TO GROUP INDEX

FUEL PUMP AND FILTER 1981 EIGHT CYLINDER CJ-5,6,7,8, SCRAMBLER
Figure 14-3300

81J14 3300

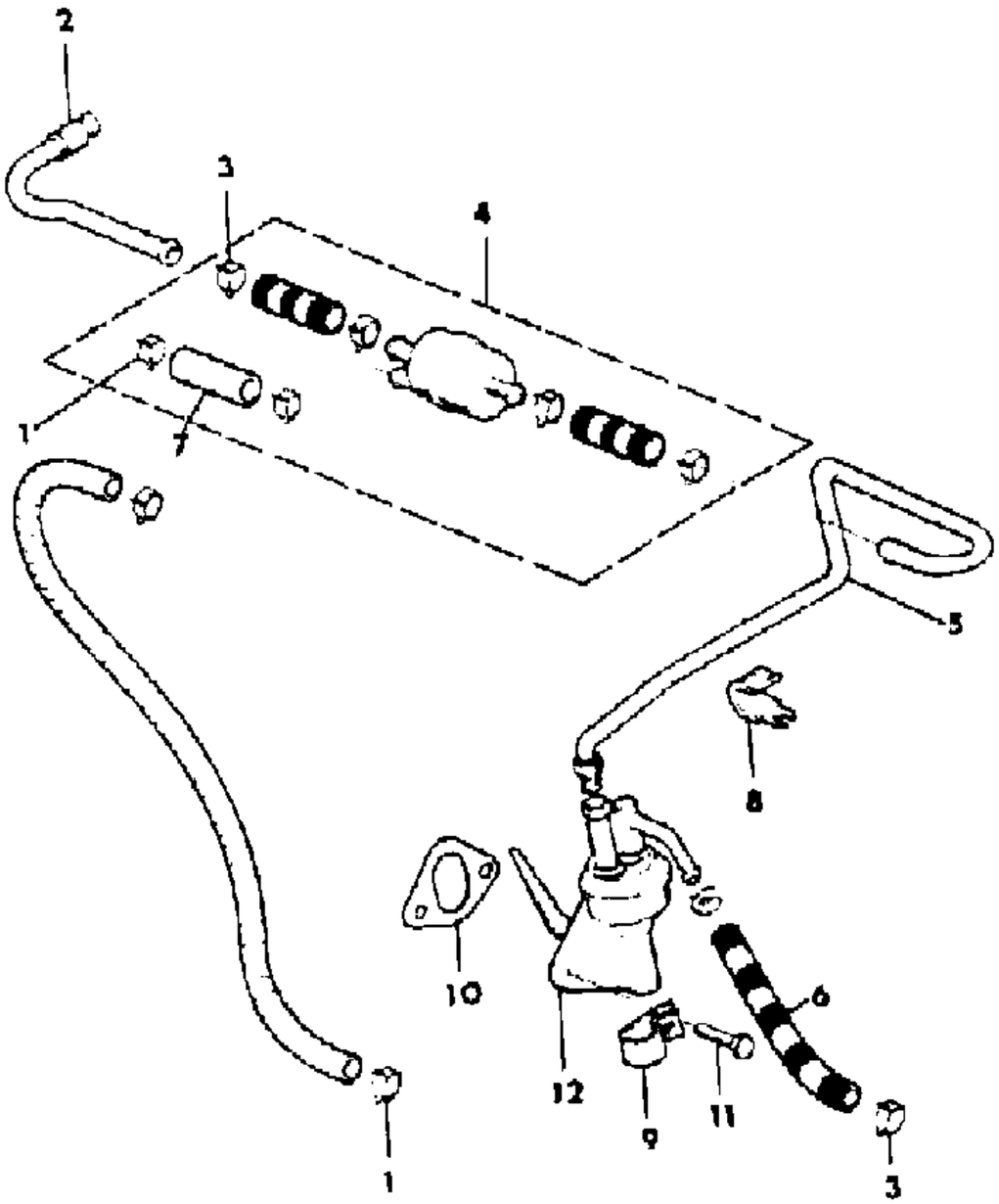

ITEM	PART NUMBER	QTY	BODY	MODEL	DESCRIPTION
1	J322 2900	2			CLAMP, Hose
2	J321 3836	1			TUBE, Fuel Supply
3	J318 1643	6			CLAMP, Hose
4	J812 9383	1			FILTER PACKAGE, Fuel
5	J812 7338	1			TUBE, Fuel Supply
6	J812 5823	AR			HOSE, Bulk, 0.31" I.D.
7	J812 5843	AR			HOSE, Bulk, 0.25" I.D.
8	J535 0435	1			CLIP
9	J012 8302	1			CLIP
10	J317 4685	1			GASKET, Fuel Pump
11	J018 0125	2			BOLT
12	J322 8195	1			PUMP, Fuel

MODEL CODES

16=Cherokee 2 Dr.(1981-83)
17=Cherokee 2 Dr.(1981-83)
73=Cherokee 2WD-2 Dr.(1984-86)
74=Cherokee 2WD-4 Dr.(1984-86)
18=Cherokee 4 Dr.(1981-83)
77=Cherokee 4WD-2 Dr.(1984-86)
78=Cherokee 4WD-4 Dr.(1984-86)
85=CJ-5 (1981-83)
86=CJ-6(1981)
87=CJ-7(1981-86)
88=CJ-8, Scrambler(1981-86)
64=Comanche 2WD-6 Ft. Box(1986)
66=Comanche 2WD-7 Ft. Box(1986)
63=Comanche 4WD-6 Ft. Box(1986)
65=Comanche 4WD-7 Ft. Box(1986)
15=Grand Wagoneer 4 Dr.(1984-86)
25=J-10 Truck 7 Ft. Box(1981-84)
26=J10 Truck 8 Ft. Box(1981-86)
27=J-20 Truck 8 Ft. Box(1981-86)
15=Wagoneer 4 Dr.(1981-83)
75=Wagoneer 4WD-4 Dr.(1984-86)

BODY
CJ=CJ-5, CJ-6, CJ-7, CJ-8, Scrambler(1981-86)
MJ=Comanche Pickup(1986)

STYLES
SJ=Wagoneer(1981-83), Grand Wagoneer(1984-86), Cherokee(1981-83), J-10, J-20(1981-86)
XJ=Wagoneer(1984-86), Cherokee(1984-86)

AR = Use as Required - = Non Illustrated Part P.A.R. = Paint as Required

« RETURN TO GROUP INDEX

FUEL LINES 1981-86 FOUR CYLINDER DIESEL, EXPORT CJ-5,6,7,8
Figure 14-3400

81J14 3400

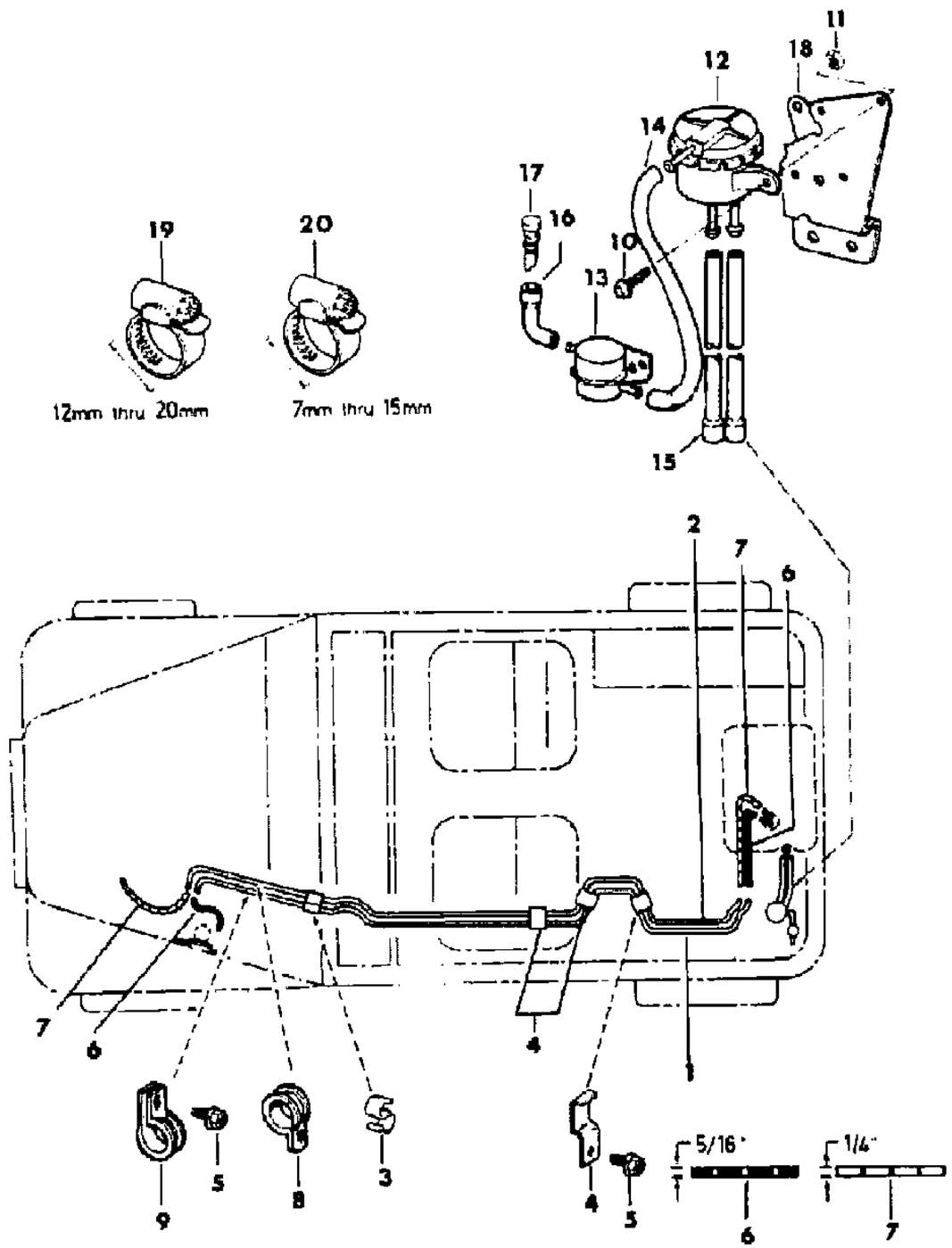

ITEM	PART NUMBER	QTY	BODY	MODEL	DESCRIPTION
1					TUBE, Fuel Supply
	J536 3474	1		87	1982-85
	J536 4037	1		87	1986
	J536 3473	1		88	1982-85
	J536 4223	1		88	1986
2					TUBE, Fuel Return
	J536 1513	1		85	1981
	J536 3469	1		85	1982-85
	J536 1514	1		87	1981
	J536 3470	1		87	1982-85
	J536 3476	1		87	1986
	J536 1515	1		88	1981
	J536 3471	1		88	1982-85
	J536 3477	1		88	1986
3	J400 4928	AR			CLIP
4	J400 4901	AR			CLIP
5	J400 4077	AR			SCREW
6	J812 5823	AR			HOSE, Bulk
7	J812 5843	AR			HOSE, Bulk
8	J012 0520	1			CLIP
9	J012 7879	1			CLIP
10	J018 8926	AR			BOLT
11	J012 0361	AR			NUT
12	J319 8666	1			VALVE, Check
13	J322 7951	1			VALVE, Rollover
14	J323 0781	1			HOSE
15					HOSE
	J536 1944	2		85,87	
	J536 3033	2		88	1981-83
	J536 3434	2		88	1984-86
16					HOSE
	J536 4758	1			1983-86
17	J535 2955	1		88	BRACKET
18	J536 2978	1		88	BRACKET
19	3300 0785	AR			CLAMP
20	3300 0786	AR			CLAMP

MODEL CODES

16=Cherokee 2 Dr.(1981-83)
17=Cherokee 2 Dr.(1981-83)
73=Cherokee 2WD-2 Dr.(1984-86)
74=Cherokee 2WD-4 Dr.(1984-86)
18=Cherokee 4 Dr.(1981-83)
77=Cherokee 4WD-2 Dr.(1984-86)
78=Cherokee 4WD-4 Dr.(1984-86)
85=CJ-5 (1981-83)
86=CJ-6(1981)
87=CJ-7(1981-86)
88=CJ-8, Scrambler(1981-86)
64=Comanche 2WD-6 Ft. Box(1986)
66=Comanche 2WD-7 Ft. Box(1986)
63=Comanche 4WD-6 Ft. Box(1986)
65=Comanche 4WD-7 Ft. Box(1986)
15=Grand Wagoneer 4 Dr.(1984-86)
25=J-10 Truck 7 Ft. Box(1981-84)
26=J10 Truck 8 Ft. Box(1981-86)
27=J-20 Truck 8 Ft. Box(1981-86)
15=Wagoneer 4 Dr.(1981-83)
75=Wagoneer 4WD-4 Dr.(1984-86)

BODY
CJ=CJ-5, CJ-6, CJ-7, CJ-8, Scrambler(1981-86)
MJ=Comanche Pickup(1986)

STYLES
SJ=Wagoneer(1981-83), Grand Wagoneer(1984-86), Cherokee(1981-83), J-10, J-20(1981-86)
XJ=Wagoneer(1984-86), Cherokee(1984-86)

AR = Use as Required - = Non Illustrated Part P.A.R. = Paint as Required

« RETURN TO GROUP INDEX

FUEL LINES, 1981-86 GAS ENGINES, US, CANADA, ECONOMIC COMMISSION OF EUROPE CJ-5,6,7,8, SCRAMBLER
Figure 14-3500

81J14 3500

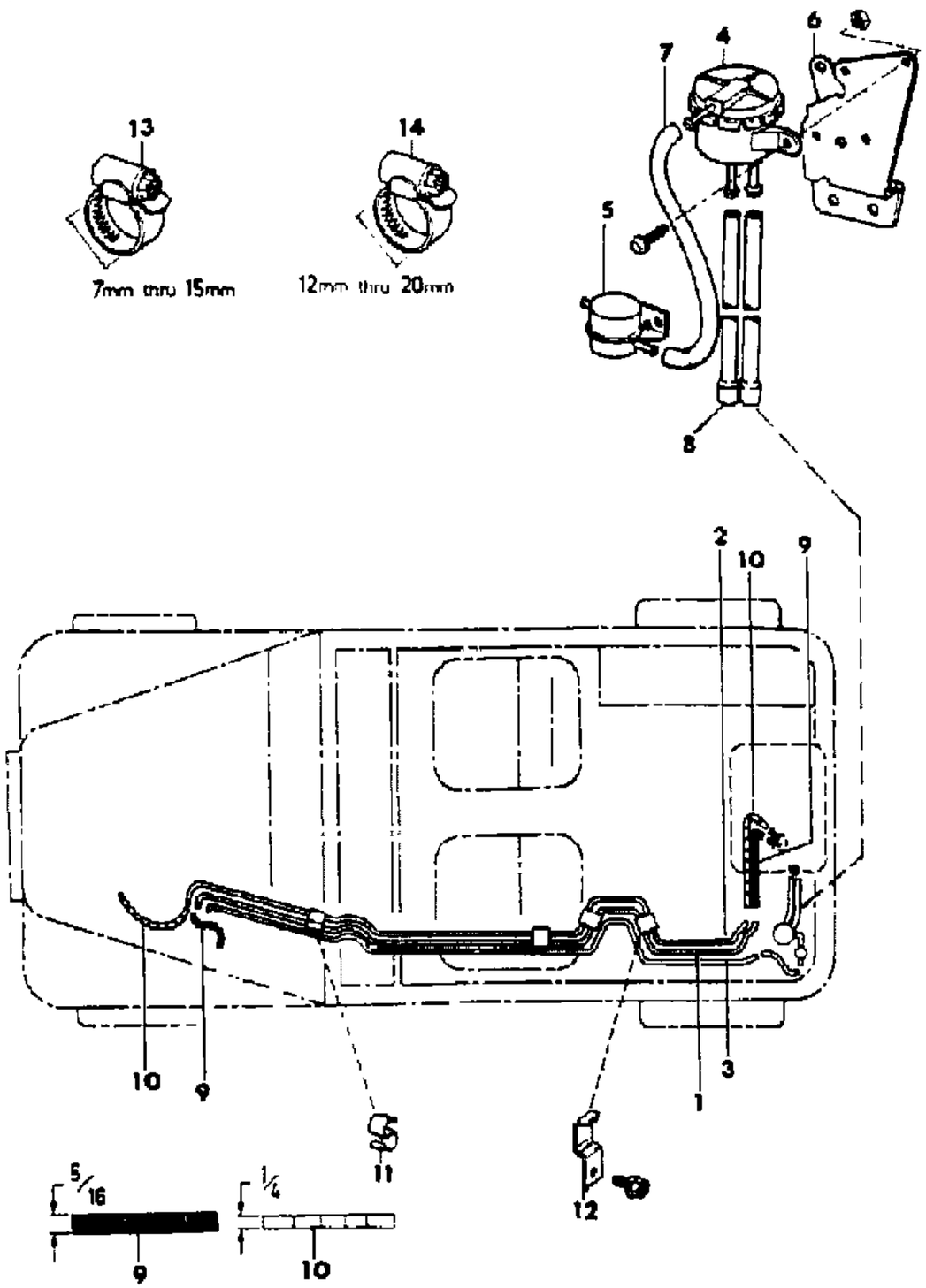

ITEM	PART NUMBER	QTY	BODY	MODEL	DESCRIPTION
1					TUBE, Fuel Supply
	J535 7932	1		85	1981: Four, Six Cylinder
	J536 1598	1		85	1981: Eight Cylinder
	J536 3472	1		85	1982-83
	J535 7933	1		87	1981: Four, Six Cylinder
	J536 1599	1		87	1981: Eight Cylinder
	J536 3474	1		87	1982-83
	J536 4743	1		87	1984-86: Four Cylinder
	J536 3474	1		87	1984-86: Six Cylinder
	J535 7934	1		88	1981: Four, Six Cylinder
	J536 3473	1		88	1982-83
	J536 4742	1		88	1984-86: Four Cylinder
	J536 3473	1		88	1984-86: Six Cylinder
2					TUBE, Fuel Return
	J536 1600	1		85	1981
	J536 3475	1		85	1982-83
	J536 1601	1		87	1981
	J536 3476	1		87	1982-86
	J536 1602	1		88	1981
	J536 3477	1		88	1982-86
3					TUBE, Fuel Vent
	J536 1460	1		85	1981: Four Cylinder
	J535 6592	1		85	1981: Six, Eight Cylinder
	J536 3481	1		85	1982-83: Four Cylinder
	J536 3510	1		85	1982-83: Six Cylinder
	J536 1459	1		87	1981: Four Cylinder
	J535 6593	1		87	1981: Six Cylinder
	J536 3483	1		87	1982-83: Four Cylinder
	J536 3512	1		87	1984-86: Four Cylinder
	J536 3512	1		87	1982-86: Six Cylinder
	J536 1463	1		88	1981: Four Cylinder
	J535 6594	1		88	1981: Six Cylinder
	J536 3482	1		88	1982-83: Four Cylinder
	J536 3511	1		88	1984-86: Four Cylinder
	J536 3511	1		88	1982-86: Six Cylinder
4	J319 8666	1			VALVE, Check
5	J322 7951	1			VALVE, Rollover
6	J536 2978	1		88	BRACKET, Valve
7	J323 0781	1			HOSE

MODEL CODES

16=Cherokee 2 Dr.(1981-83)	78=Cherokee 4WD-4 Dr.(1984-86)	64=Comanche 2WD-6 Ft. Box(1986)	25=J-10 Truck 7 Ft. Box(1981-84)
17=Cherokee 2 Dr.(1981-83)	85=CJ-5 (1981-83)	66=Comanche 2WD-7 Ft. Box(1986)	26=J10 Truck 8 Ft. Box(1981-86)
73=Cherokee 2WD-2 Dr.(1984-86)	86=CJ-6(1981)	63=Comanche 4WD-6 Ft. Box(1986)	27=J-20 Truck 8 Ft. Box(1981-86)
74=Cherokee 2WD-4 Dr.(1984-86)	87=CJ-7(1981-86)	65=Comanche 4WD-7 Ft. Box(1986)	15=Wagoneer 4 Dr.(1981-83)
18=Cherokee 4 Dr.(1981-83)	88=CJ-8, Scrambler(1981-86)	15=Grand Wagoneer 4 Dr.(1984-86)	75=Wagoneer 4WD-4 Dr.(1984-86)
77=Cherokee 4WD-2 Dr.(1984-86)			

BODY
CJ=CJ-5, CJ-6, CJ-7, CJ-8, Scrambler(1981-86)
MJ=Comanche Pickup(1986)

STYLES
SJ=Wagoneer(1981-83), Grand Wagoneer(1984-86), Cherokee(1981-83), J-10, J-20(1981-86)
XJ=Wagoneer(1984-86), Cherokee(1984-86)

AR = Use as Required - = Non Illustrated Part P.A.R. = Paint as Required

81J14 3500

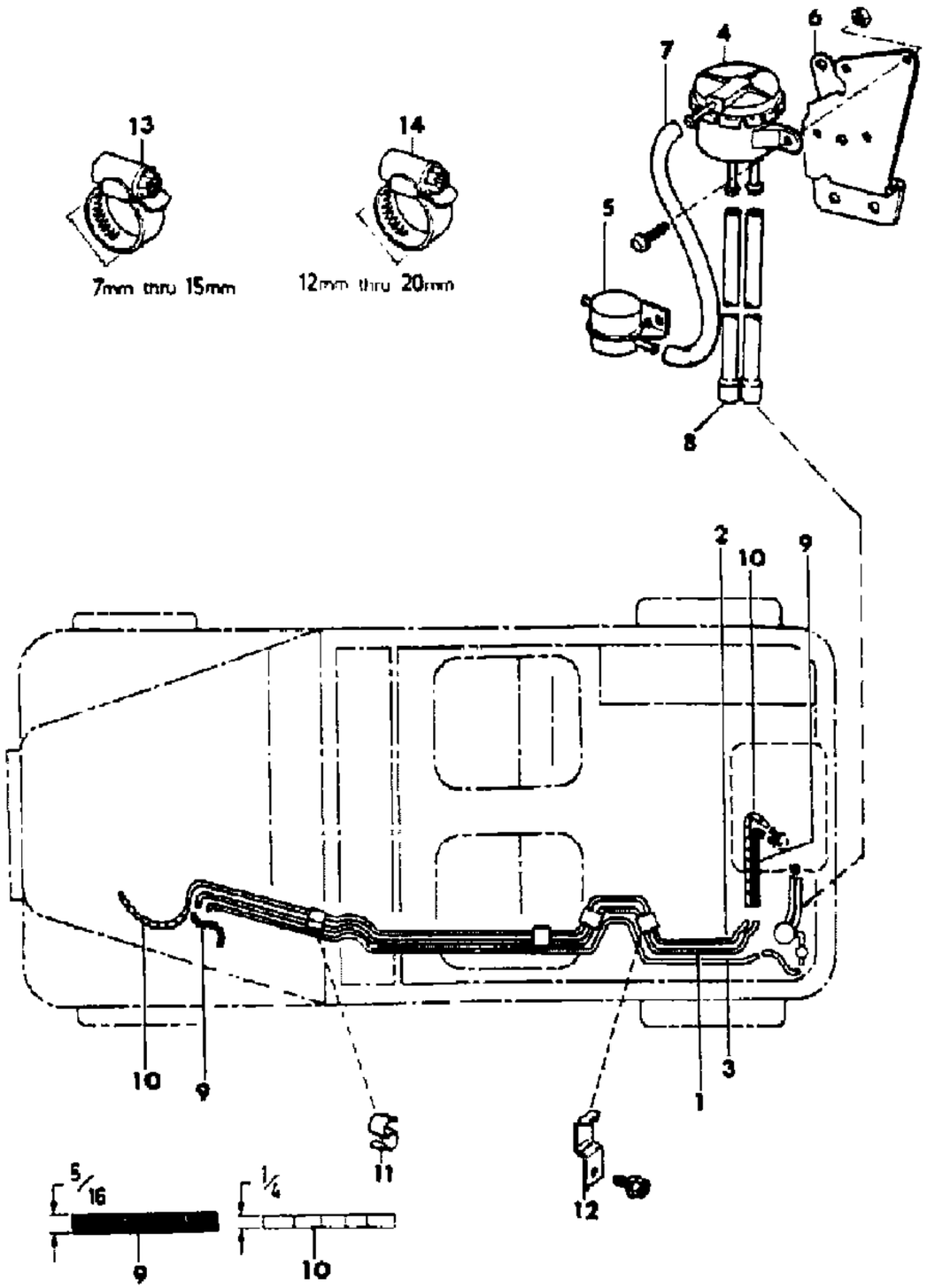

ITEM	PART NUMBER	QTY	BODY	MODEL	DESCRIPTION
8					HOSE
	J536 1944	2		85,87	
	J536 3032	2		88	1981-83
	J536 3434	2		88	1984-86
9	J812 5823	AR			HOSE, Bulk
10	J812 5843	AR			HOSE, Bulk
11	J400 4928	AR			CLIP
12	J400 4901	AR			CLIP
13	3300 0786	AR			CLAMP
14	3300 0785	AR			CLAMP

MODEL CODES
16=Cherokee 2 Dr.(1981-83)
17=Cherokee 2 Dr.(1981-83)
73=Cherokee 2WD-2 Dr.(1984-86)
74=Cherokee 2WD-4 Dr.(1984-86)
18=Cherokee 4 Dr.(1981-83)
77=Cherokee 4WD-2 Dr.(1984-86)
78=Cherokee 4WD-4 Dr.(1984-86)
85=CJ-5 (1981-83)
86=CJ-6(1981)
87=CJ-7(1981-86)
88=CJ-8, Scrambler(1981-86)
64=Comanche 2WD-6 Ft. Box(1986)
66=Comanche 2WD-7 Ft. Box(1986)
63=Comanche 4WD-6 Ft. Box(1986)
65=Comanche 4WD-7 Ft. Box(1986)
15=Grand Wagoneer 4 Dr.(1984-86)
25=J-10 Truck 7 Ft. Box(1981-84)
26=J10 Truck 8 Ft. Box(1981-86)
27=J-20 Truck 8 Ft. Box(1981-86)
15=Wagoneer 4 Dr.(1981-83)
75=Wagoneer 4WD-4 Dr.(1984-86)

BODY
CJ=CJ-5, CJ-6, CJ-7, CJ-8, Scrambler(1981-86)
MJ=Comanche Pickup(1986)

STYLES
SJ=Wagoneer(1981-83), Grand Wagoneer(1984-86), Cherokee(1981-83), J-10, J-20(1981-86)
XJ=Wagoneer(1984-86), Cherokee(1984-86)

AR = Use as Required - = Non Illustrated Part P.A.R. = Paint as Required

FUEL LINES 1981-86 GAS ENGINES, NON-REGULATED MARKETS CJ-5,6,7,8
Figure 14-3600

81J14 3600

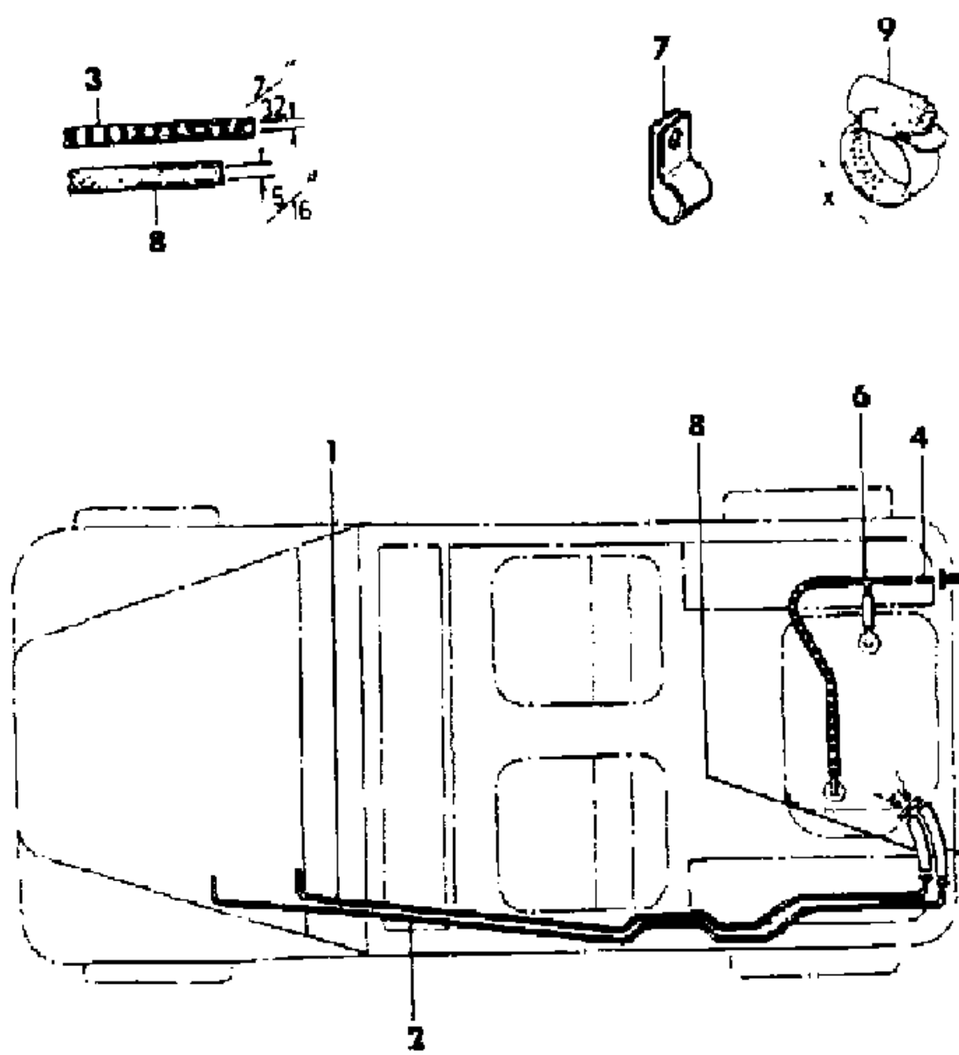

ITEM	PART NUMBER	QTY	BODY	MODEL	DESCRIPTION
1					TUBE, Fuel Supply
	J535 7932	1		85	1981: Four, Six Cylinder
	J536 1598	1		85	1981: Eight Cylinder
	J536 3472	1		85	1982-83
	J535 7933	1		87	1981: Four, Six Cylinder
	J536 1599	1		87	1981: Eight Cylinder
	J536 3474	1		87	1982-83
	J536 4743	1		87	1984-86: Four Cylinder
	J536 3474	1		87	1984-86: Six Cylinder
	J535 7934	1		88	1981: Four, Six Cylinder
	J536 3473	1		88	1982-83
	J536 4742	1		88	1984-86: Four Cylinder
	J536 3473	1		88	1984-86: Six Cylinder
2					TUBE, Fuel Return
	J536 1600	1		85	1981
	J536 3475	1		85	1982-83
	J536 1601	1		87	1981
	J536 3476	1		87	1982-86
	J536 1602	1		88	1981
	J536 3477	1		88	1982-86
3	8350 1904	AR			HOSE, Bulk
4	J400 7075	1			CONNECTOR
5	J535 2955	1			CAP, Vent
6	J323 2982	1			TEE
7	J014 0780	1			CLIP
8	J812 5823	AR			HOSE, Bulk
9					CLAMP
	3300 0785	AR			X=.47" to .79"
	3300 0786	AR			X=.28" to .59"

MODEL CODES
16=Cherokee 2 Dr.(1981-83)
17=Cherokee 2 Dr.(1981-83)
73=Cherokee 2WD-2 Dr.(1984-86)
74=Cherokee 2WD-4 Dr.(1984-86)
18=Cherokee 4 Dr.(1981-83)
77=Cherokee 4WD-2 Dr.(1984-86)
78=Cherokee 4WD-4 Dr.(1984-86)
85=CJ-5 (1981-83)
86=CJ-6(1981)
87=CJ-7(1981-86)
88=CJ-8, Scrambler(1981-86)
64=Comanche 2WD-6 Ft. Box(1986)
66=Comanche 2WD-7 Ft. Box(1986)
63=Comanche 4WD-6 Ft. Box(1986)
65=Comanche 4WD-7 Ft. Box(1986)
15=Grand Wagoneer 4 Dr.(1984-86)
25=J-10 Truck 7 Ft. Box(1981-84)
26=J10 Truck 8 Ft. Box(1981-86)
27=J-20 Truck 8 Ft. Box(1981-86)
15=Wagoneer 4 Dr.(1981-83)
75=Wagoneer 4WD-4 Dr.(1984-86)

BODY
CJ=CJ-5, CJ-6, CJ-7, CJ-8, Scrambler(1981-86)
MJ=Comanche Pickup(1986)

STYLES
SJ=Wagoneer(1981-83), Grand Wagoneer(1984-86), Cherokee(1981-83), J-10, J-20(1981-86)
XJ=Wagoneer(1984-86), Cherokee(1984-86)

AR = Use as Required - = Non Illustrated Part P.A.R. = Paint as Required

« RETURN TO GROUP INDEX

FUEL TANK 15.0 GALLON CJ-5,6,7,8, SCRAMBLER
Figure 14-3700

81J14 3700

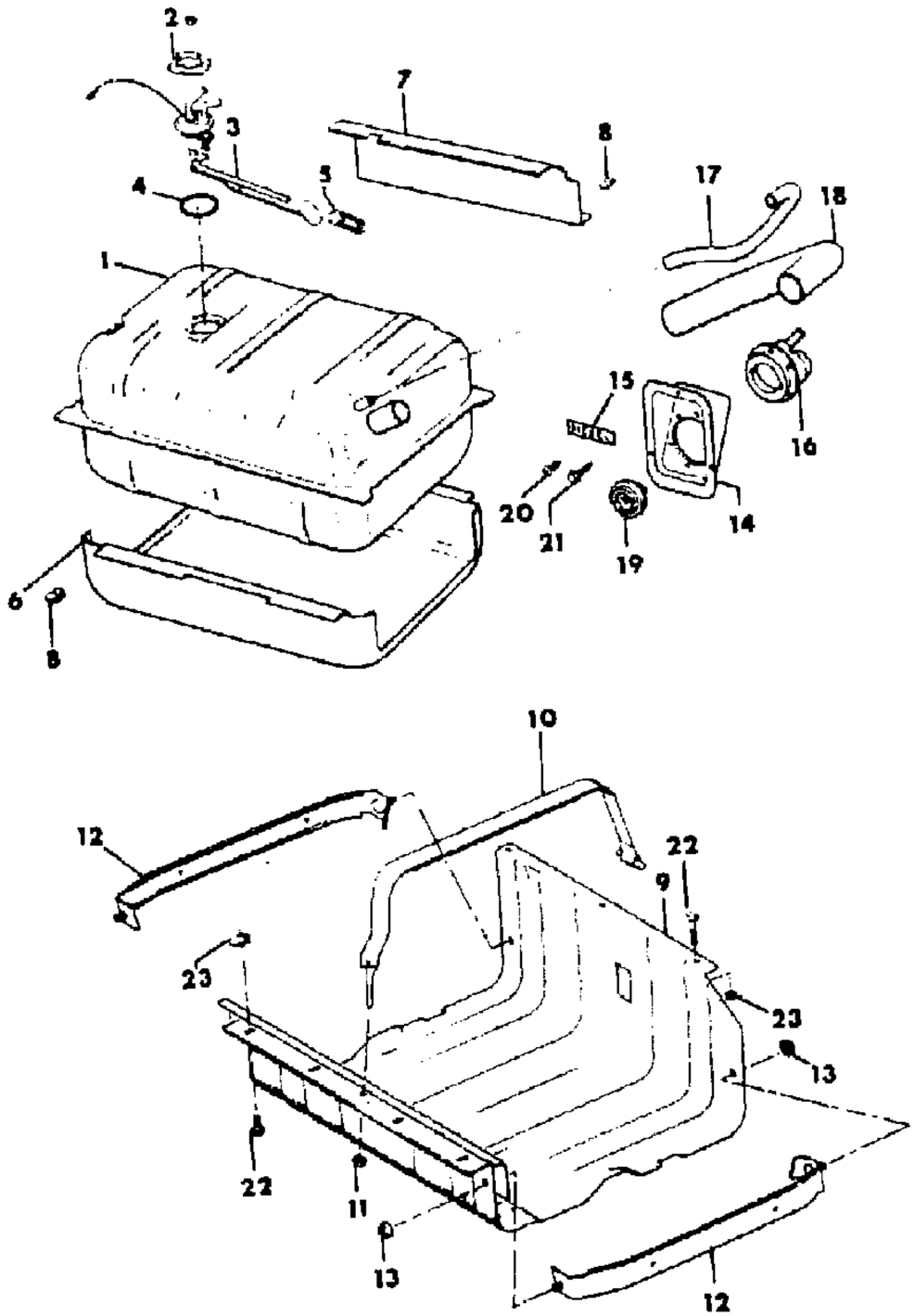

ITEM	PART NUMBER	QTY	BODY	MODEL	DESCRIPTION
1	J812 8585	1			TANK, Fuel
2	J092 9669	1			LOCK
3	J535 7373	1			GAUGE, Fuel ***
4	J094 1521	1			GASKET
5	J323 0376	1			FILTER, Fuel
6	J535 9081	1			SHIELD, Fuel Tank
7	J535 6705	1			SHIELD, Fuel Tank
8	J400 5486	8			CLIP
9	J535 7023	1			PLATE, Skid
10	J535 6651	1			STRAP
11	J400 3587	1			NUT, Lock
12					STRAP
	J535 7879	1			Left
	J535 7880	1			Right
13	J400 3956	4			NUT, Lock
14	J546 3803	1			PROTECTOR
15	J546 4900	1			LABEL, Diesel Fuel, EXPORT
16					TUBE, Fuel Filler
	J536 3879	1			1981: US
	J536 3878	1			1981: CANADA
	J536 3878	1			1981: EXPORT, Australian Design Rules, Economic Commission of Europe, Non-Regulated Markets
	J536 3877	1			1981: EXPORT, Diesel
	J536 3879	1		85,87	1982-83: US
	J536 3878	1		85,87	1982-83: CANADA
	J536 4176	1		88	1982-83: US
	J536 4185	1		88	1982-83: CANADA
	J536 3878	1		87	1982-85: EXPORT, Australian Design Rules, Economic Commission of Europe, Non-Regulated Markets
	J536 4185	1		88	1982-85: EXPORT, Australian Design Rules, Economic Commission of Europe, Non-Regulated Markets
	J536 3878	1		87	1982-85: Japan
	J536 4760	1		87	1984-86: US, CANADA
	J536 4761	1		88	1984-86: US, CANADA
	J536 3878	1		87	1986: EXPORT, Economic Commission of Europe, Non-Regulated Markets
	J536 4185	1		88	1986: EXPORT, Economic Commission of Europe, Non-Regulated Markets
17					HOSE, Vent

MODEL CODES

16=Cherokee 2 Dr.(1981-83)	78=Cherokee 4WD-4 Dr.(1984-86)	64=Comanche 2WD-6 Ft. Box(1986)	25=J-10 Truck 7 Ft. Box(1981-84)
17=Cherokee 2 Dr.(1981-83)	85=CJ-5 (1981-83)	66=Comanche 2WD-7 Ft. Box(1986)	26=J10 Truck 8 Ft. Box(1981-86)
73=Cherokee 2WD-2 Dr.(1984-86)	86=CJ-6(1981)	63=Comanche 4WD-6 Ft. Box(1986)	27=J-20 Truck 8 Ft. Box(1981-86)
74=Cherokee 2WD-4 Dr.(1984-86)	87=CJ-7(1981-86)	65=Comanche 4WD-7 Ft. Box(1986)	15=Wagoneer 4 Dr.(1981-83)
18=Cherokee 4 Dr.(1981-83)	88=CJ-8, Scrambler(1981-86)	15=Grand Wagoneer 4 Dr.(1984-86)	75=Wagoneer 4WD-4 Dr.(1984-86)
77=Cherokee 4WD-2 Dr.(1984-86)			

BODY
CJ=CJ-5, CJ-6, CJ-7, CJ-8, Scrambler(1981-86)
MJ=Comanche Pickup(1986)

STYLES
SJ=Wagoneer(1981-83), Grand Wagoneer(1984-86), Cherokee(1981-83), J-10, J-20(1981-86)
XJ=Wagoneer(1984-86), Cherokee(1984-86)

AR = Use as Required - = Non Illustrated Part P.A.R. = Paint as Required

« RETURN TO GROUP INDEX »

FUEL TANK 15.0 GALLON CJ-5,6,7,8, SCRAMBLER
Figure 14-3700

81J14 3700

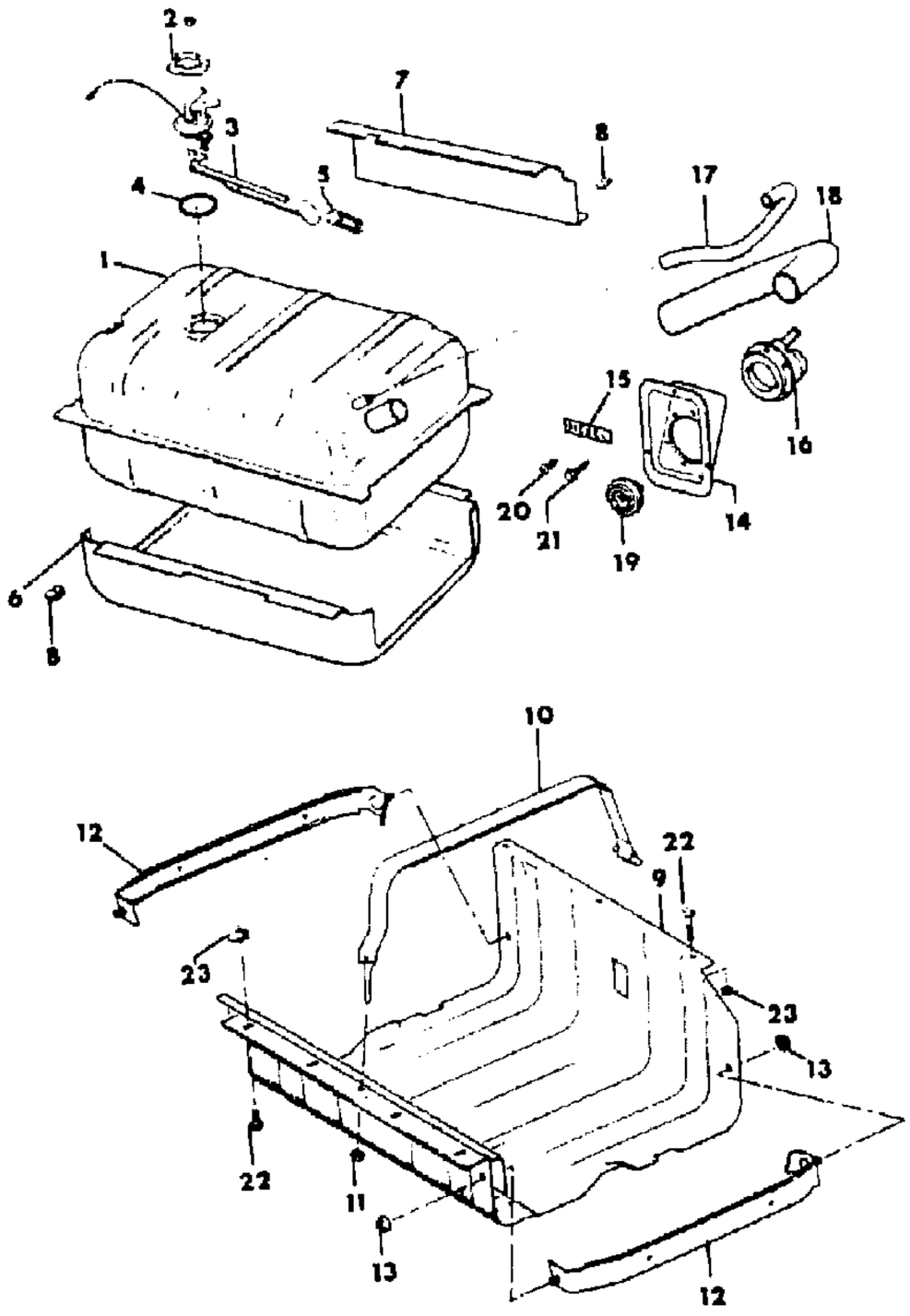

ITEM	PART NUMBER	QTY	BODY	MODEL	DESCRIPTION
	J535 7922	1		85	
	J535 7971	1		87	
	J536 2774	1		88	1981-82
	J536 4195	1		88	1983-86
18					HOSE, Filler
	J535 7927	1		85	
	J535 7970	1		87	
	J536 2773	1		88	1981-82
	J536 4196	1		88	1983-86
19					CAP, Fuel Filler
					Non-Locking
	J535 8207	1			US, Non-Vented
	J535 6793	1			EXPORT, Vented
					Locking
	J535 0897	1			EXPORT, Non-Vented
	J093 4197	1			1981-82: EXPORT
20	J400 5817	3			SCREW
21	J812 0054	6			SCREW
22					BOLT
	J018 0078	AR			Hex, 5/16"-18x3/4"
	J400 5819	AR			Carriage, 5/16"-18x3/4"
	J027 3773	2			Flange, 3/8"-16x3/4"
23					NUT
	J400 1457	AR			Lock, 5/16"-18x.26"
	J400 1702	AR			Push, 5/16"x.156x.63"
	J400 5142	2			Flange, 3/8"-18x.40"

MODEL CODES

16=Cherokee 2 Dr.(1981-83)	78=Cherokee 4WD-4 Dr.(1984-86)	64=Comanche 2WD-6 Ft. Box(1986)	25=J-10 Truck 7 Ft. Box(1981-84)
17=Cherokee 2 Dr.(1981-83)	85=CJ-5 (1981-83)	66=Comanche 2WD-7 Ft. Box(1986)	26=J10 Truck 8 Ft. Box(1981-86)
73=Cherokee 2WD-2 Dr.(1984-86)	86=CJ-6(1981)	63=Comanche 4WD-6 Ft. Box(1986)	27=J-20 Truck 8 Ft. Box(1981-86)
74=Cherokee 2WD-4 Dr.(1984-86)	87=CJ-7(1981-86)	65=Comanche 4WD-7 Ft. Box(1986)	15=Wagoneer 4 Dr.(1981-83)
18=Cherokee 4 Dr.(1981-83)	88=CJ-8, Scrambler(1981-86)	15=Grand Wagoneer 4 Dr.(1984-86)	75=Wagoneer 4WD-4 Dr.(1984-86)
77=Cherokee 4WD-2 Dr.(1984-86)			

BODY
CJ=CJ-5, CJ-6, CJ-7, CJ-8, Scrambler(1981-86)
MJ=Comanche Pickup(1986)

STYLES
SJ=Wagoneer(1981-83), Grand Wagoneer(1984-86), Cherokee(1981-83), J-10, J-20(1981-86)
XJ=Wagoneer(1984-86), Cherokee(1984-86)

AR = Use as Required - = Non Illustrated Part P.A.R. = Paint as Required

« RETURN TO GROUP INDEX

FUEL TANK 20.0 GALLON CJ-5,6,7,8, SCRAMBLER
Figure 14-3800

81J14 3800

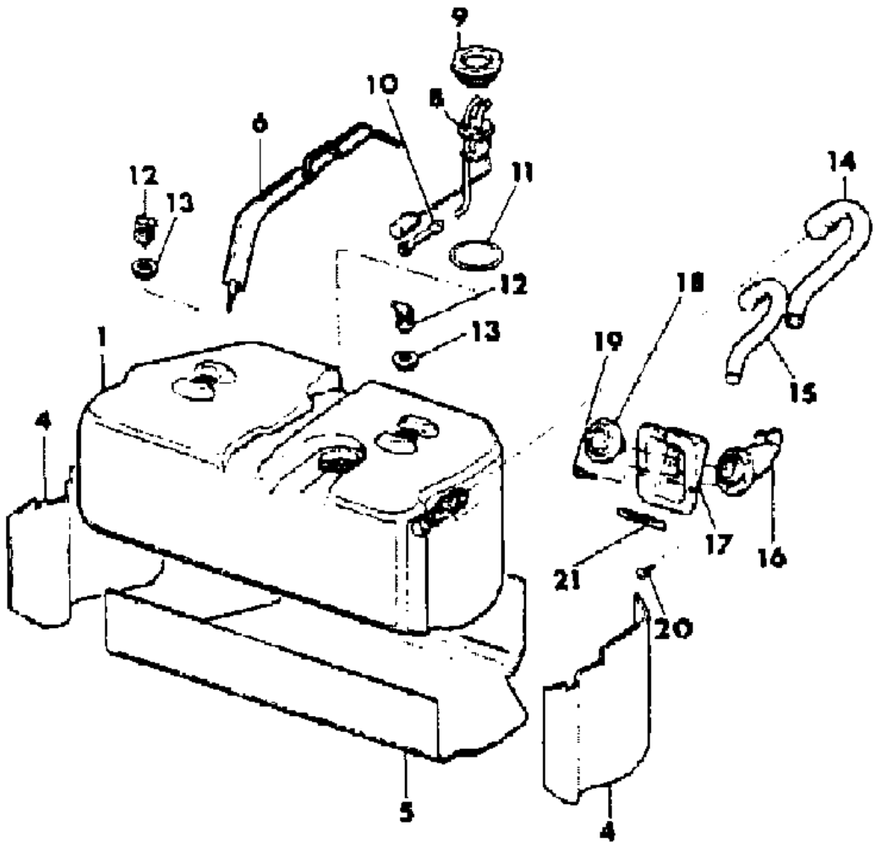

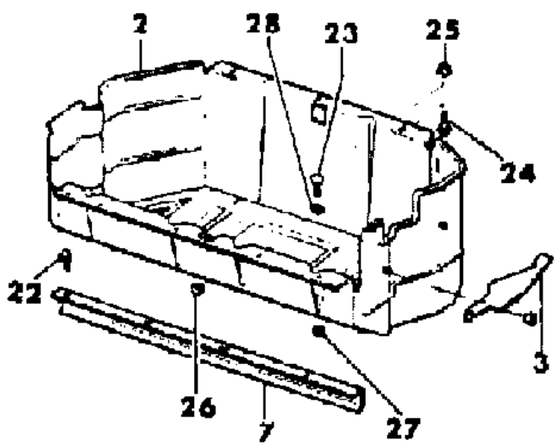

ITEM	PART NUMBER	QTY	BODY	MODEL	DESCRIPTION
1	J536 2498	1			TANK, Fuel
2	J536 3147	1			SHIELD, Fuel Tank
3	J536 3015	1			SHIELD, Fuel Tank
4	J536 3232	2			PAD, Fuel Tank
5	J536 3225	1			PAD, Fuel Tank
6	J536 3078	1			STRAP
7	J536 3513	1		88	SHIELD
8	J536 2090	1			GAUGE, Fuel ***
9	J537 0014	1			LOCK
10	J536 1389	1			FILTER
11	J094 1521	1			GASKET
12	J536 2541	2			VALVE
13	J536 0059	2			SEAL
14					HOSE, Filler
	J536 3050	1		85	
	J536 2158	1		87	
	J536 3317	1		88	1982
	J536 4198	1		88	1983-86
15					HOSE, Vent
	J536 3049	1		85	
	J536 2159	1		87	
	J536 3316	1		88	1982
	J536 4197	1		88	1983-86
16					TUBE, Fuel Filler
	J536 3879	1			1981: US
	J536 3878	1			1981: CANADA
	J536 3878	1			1981: EXPORT, Australian Design Rules, Economic Commission of Europe, Non-Regulated Markets
	J536 3877	1			1981: EXPORT, Diesel
	J536 3879	1		85,87	1982-83: US
	J536 3878	1		85,87	1982: CANADA
	J536 4176	1		88	1982-83: US
	J536 4185	1		88	1982-83: CANADA
	J536 3878	1		87	1982-85: EXPORT, Australian Design Rules, Economic Commission of Europe, Non-Regulated Markets
	J536 4185	1		88	1982-85: EXPORT, Australian Design Rules, Economic Commission of Europe, Non-Regulated Markets
	J536 3878	1		87	1982-85: Japan
	J536 4760	1		87	1984-86: US, CANADA

MODEL CODES

16=Cherokee 2 Dr.(1981-83)
17=Cherokee 2 Dr.(1981-83)
73=Cherokee 2WD-2 Dr.(1984-86)
74=Cherokee 2WD-4 Dr.(1984-86)
18=Cherokee 4 Dr.(1981-83)
77=Cherokee 4WD-2 Dr.(1984-86)
78=Cherokee 4WD-4 Dr.(1984-86)
85=CJ-5 (1981-83)
86=CJ-6(1981)
87=CJ-7(1981-86)
88=CJ-8, Scrambler(1981-86)
64=Comanche 2WD-6 Ft. Box(1986)
66=Comanche 2WD-7 Ft. Box(1986)
63=Comanche 4WD-6 Ft. Box(1986)
65=Comanche 4WD-7 Ft. Box(1986)
15=Grand Wagoneer 4 Dr.(1984-86)
25=J-10 Truck 7 Ft. Box(1981-84)
26=J10 Truck 8 Ft. Box(1981-86)
27=J-20 Truck 8 Ft. Box(1981-86)
15=Wagoneer 4 Dr.(1981-83)
75=Wagoneer 4WD-4 Dr.(1984-86)

BODY
CJ=CJ-5, CJ-6, CJ-7, CJ-8, Scrambler(1981-86)
MJ=Comanche Pickup(1986)

STYLES
SJ=Wagoneer(1981-83), Grand Wagoneer(1984-86), Cherokee(1981-83), J-10, J-20(1981-86)
XJ=Wagoneer(1984-86), Cherokee(1984-86)

AR = Use as Required - = Non Illustrated Part P.A.R. = Paint as Required

FUEL TANK 20.0 GALLON CJ-5,6,7,8, SCRAMBLER
Figure 14-3800

81J14 3800

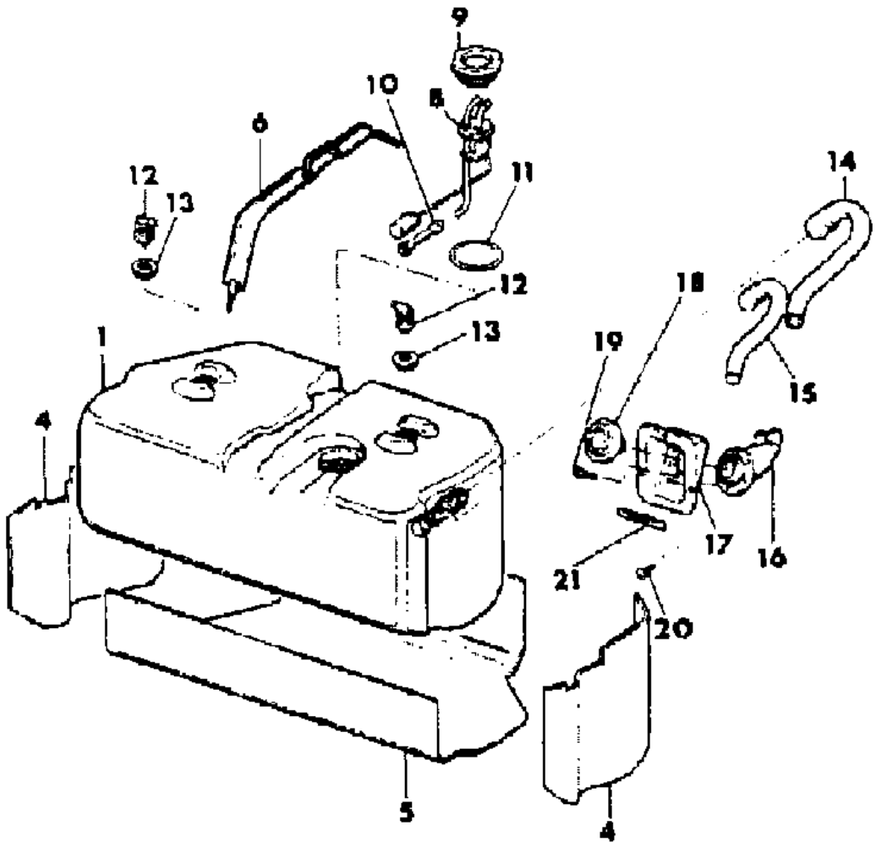

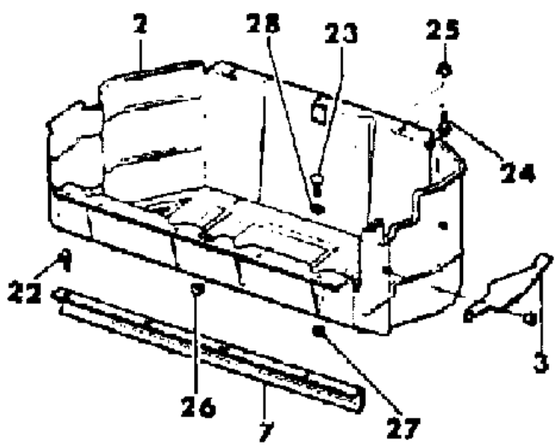

ITEM	PART NUMBER	QTY	BODY	MODEL	DESCRIPTION
	J536 4761	1		88	1984-86: US, CANADA
	J536 3878	1		87	1986: EXPORT, Economic Commission of Europe, Non-Regulated Markets
	J536 4185	1		88	1986: EXPORT, Economic Commission of Europe, Non-Regulated Markets
17	J546 3803	1			PROTECTOR
18					CAP, Fuel Filler
					Non-Locking
	J535 8207	1			US, Non-Vented
	J535 6793	1			EXPORT, Vented
					Locking
	J535 0897	1			EXPORT, Non-Vented
	J093 4197	1			1981-82: EXPORT
19	J812 0054	6			SCREW
20	J400 5817	3			SCREW
21	J546 4900	1			LABEL, Diesel Fuel, EXPORT
22	J400 4077	1		88	SCREW
23	J018 0078	AR			BOLT
24	J027 3773	3			BOLT
25	J400 5142	3			NUT, Flange
26	J400 3587	1			NUT
27	J400 1457	1			NUT
28	J400 1702	3			NUT, Push

MODEL CODES

16=Cherokee 2 Dr.(1981-83)
17=Cherokee 2 Dr.(1981-83)
73=Cherokee 2WD-2 Dr.(1984-86)
74=Cherokee 2WD-4 Dr.(1984-86)
18=Cherokee 4 Dr.(1981-83)
77=Cherokee 4WD-2 Dr.(1984-86)
78=Cherokee 4WD-4 Dr.(1984-86)
85=CJ-5 (1981-83)
86=CJ-6(1981)
87=CJ-7(1981-86)
88=CJ-8, Scrambler(1981-86)
64=Comanche 2WD-6 Ft. Box(1986)
66=Comanche 2WD-7 Ft. Box(1986)
63=Comanche 4WD-6 Ft. Box(1986)
65=Comanche 4WD-7 Ft. Box(1986)
15=Grand Wagoneer 4 Dr.(1984-86)
25=J-10 Truck 7 Ft. Box(1981-84)
26=J10 Truck 8 Ft. Box(1981-86)
27=J-20 Truck 8 Ft. Box(1981-86)
15=Wagoneer 4 Dr.(1981-83)
75=Wagoneer 4WD-4 Dr.(1984-86)

BODY
CJ=CJ-5, CJ-6, CJ-7, CJ-8, Scrambler(1981-86)
MJ=Comanche Pickup(1986)

STYLES
SJ=Wagoneer(1981-83), Grand Wagoneer(1984-86), Cherokee(1981-83), J-10, J-20(1981-86)
XJ=Wagoneer(1984-86), Cherokee(1984-86)

AR = Use as Required - = Non Illustrated Part P.A.R. = Paint as Required

« RETURN TO GROUP INDEX

FUEL CONTAINER 5 GALLON AUXILLIARY, EXPORT, SEVERE USE CJ-5,6,7,8
Figure 14-3900

81J14 3900

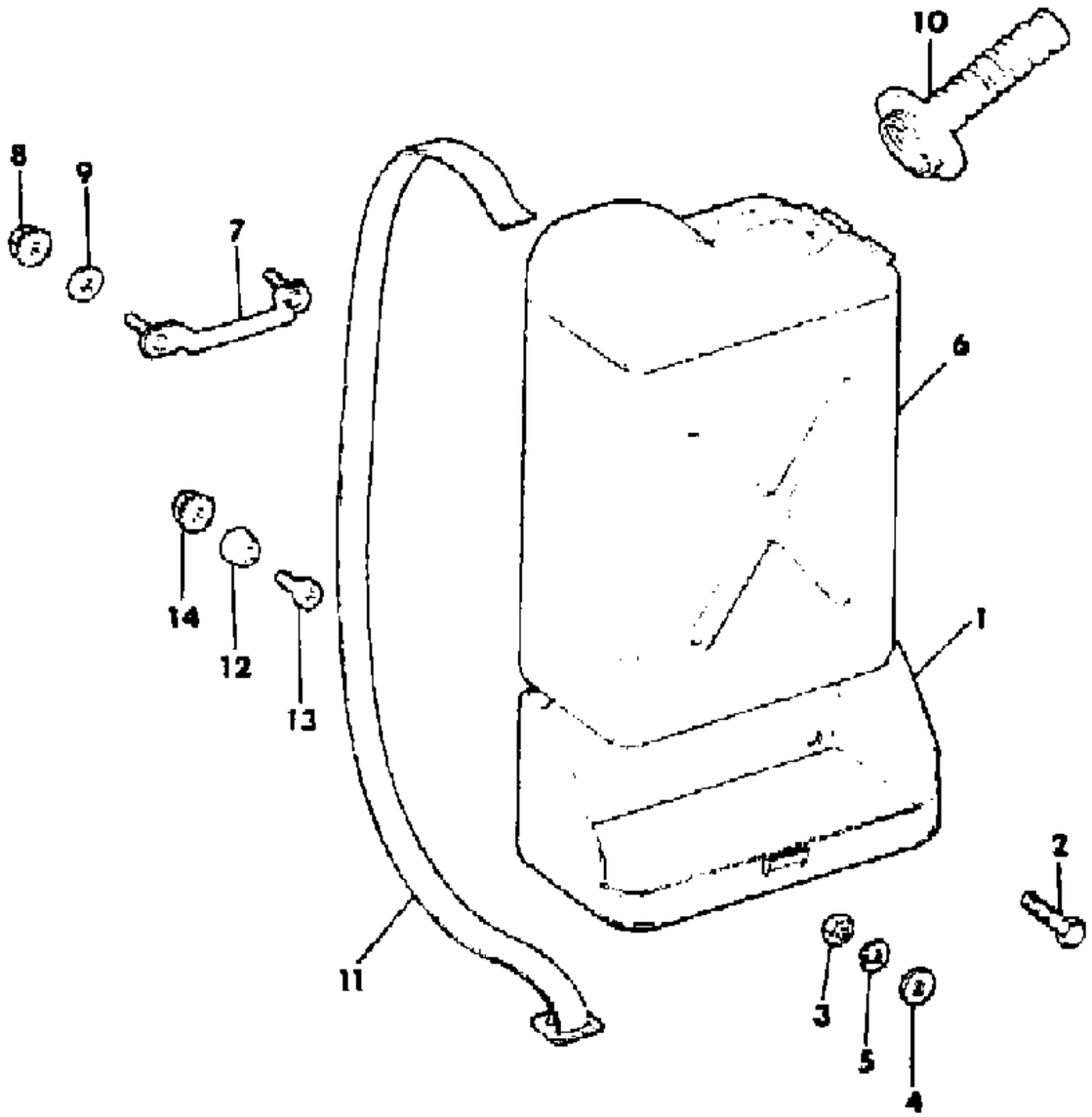

ITEM	PART NUMBER	QTY	BODY	MODEL	DESCRIPTION
1	J805 1477	1			CARRIER, Fuel Container, P.A.R. ***
2	J018 0120	4			BOLT
3	J012 0377	4			NUT
4	S044 6363	4			WASHER, Flat
5	J012 0382	4			WASHER, Lock
6	J805 1476	1			CONTAINER, Fuel, P.A.R. ***
7	J805 1517	1			LOOP, Footman ***
8	J027 1166	2			NUT
9	J941 6244	2			WASHER
10	J805 1065	1			SPOUT ***
11					STRAP
	J805 1063	1			Olive Drab
	J805 1478	1			Sand
12	J096 8734	2			BUMPER
13	J015 9947	2			SCREW
14	J027 1166	2			NUT

MODEL CODES

16=Cherokee 2 Dr.(1981-83)
17=Cherokee 2 Dr.(1981-83)
73=Cherokee 2WD-2 Dr.(1984-86)
74=Cherokee 2WD-4 Dr.(1984-86)
18=Cherokee 4 Dr.(1981-83)
77=Cherokee 4WD-2 Dr.(1984-86)
78=Cherokee 4WD-4 Dr.(1984-86)
85=CJ-5 (1981-83)
86=CJ-6(1981)
87=CJ-7(1981-86)
88=CJ-8, Scrambler(1981-86)
64=Comanche 2WD-6 Ft. Box(1986)
66=Comanche 2WD-7 Ft. Box(1986)
63=Comanche 4WD-6 Ft. Box(1986)
65=Comanche 4WD-7 Ft. Box(1986)
15=Grand Wagoneer 4 Dr.(1984-86)
25=J-10 Truck 7 Ft. Box(1981-84)
26=J10 Truck 8 Ft. Box(1981-86)
27=J-20 Truck 8 Ft. Box(1981-86)
15=Wagoneer 4 Dr.(1981-83)
75=Wagoneer 4WD-4 Dr.(1984-86)

BODY
CJ=CJ-5, CJ-6, CJ-7, CJ-8, Scrambler(1981-86)
MJ=Comanche Pickup(1986)

STYLES
SJ=Wagoneer(1981-83), Grand Wagoneer(1984-86), Cherokee(1981-83), J-10, J-20(1981-86)
XJ=Wagoneer(1984-86), Cherokee(1984-86)

AR = Use as Required - = Non Illustrated Part P.A.R. = Paint as Required

« RETURN TO GROUP INDEX

AIR CLEANER DIESEL ENGINE XJ CHEROKEE, XJ WAGONEER, COMANCHE
Figure 14-4000

B1J14 4000

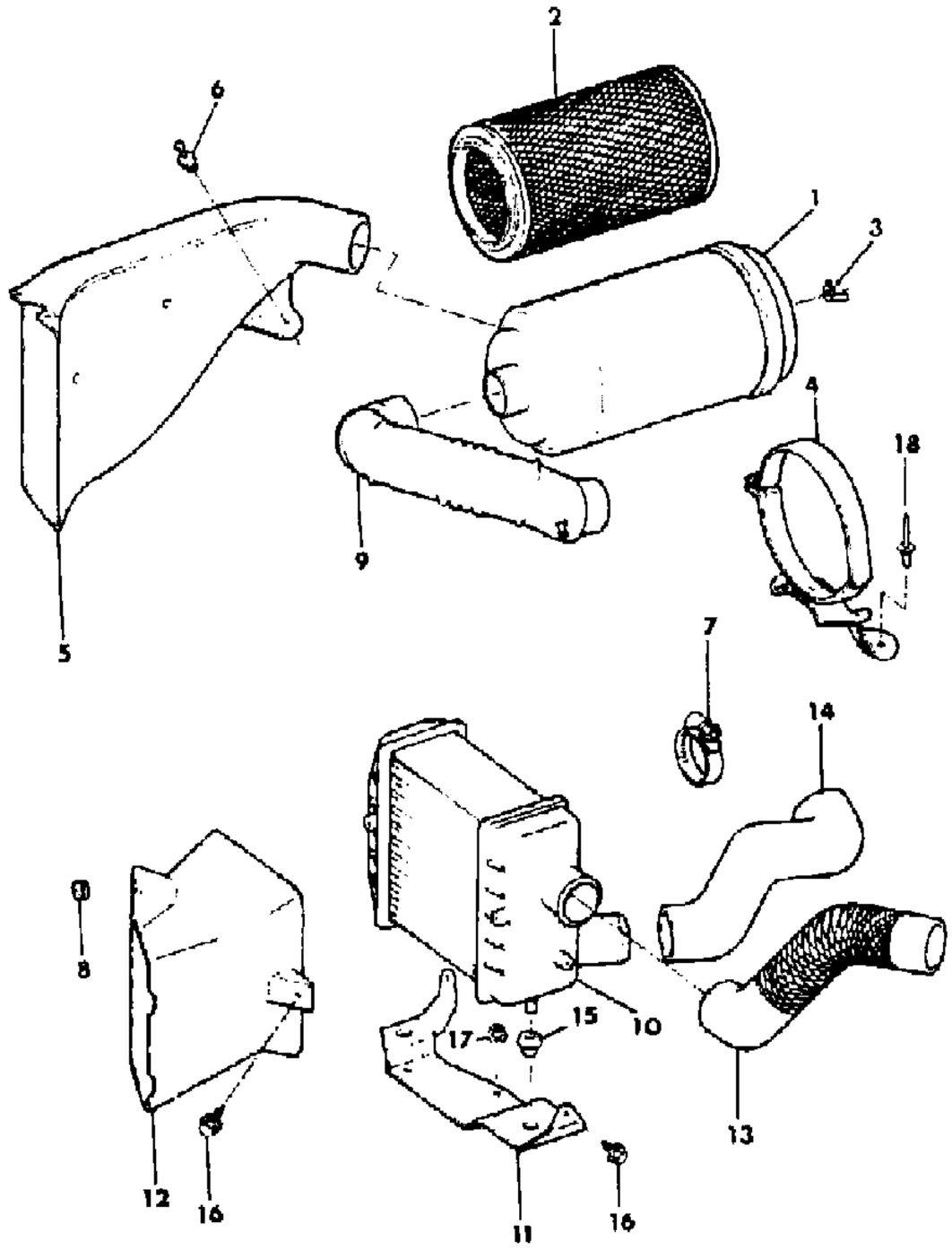

ITEM	PART NUMBER	QTY	BODY	MODEL	DESCRIPTION
1	5300 1125	1			AIR CLEANER
2	8350 1843	1			ELEMENT, Air Cleaner
3	3300 1796	1			NUT, Wing
4	3300 2197	1			BRACKET, Air Cleaner
5	3300 2198	1			DUCT, Fresh Air Intake
6	3420 1621	AR			RIVET
7					CLAMP, Hose
	J320 3078	2			1.31" Thru 2.25"
	J320 3079	5			1.81" Thru 2.75"
8	3420 2170	1			GROMMET
9	3300 2199	1			TUBE ASSEMBLY, Turbo Inlet ***
10	5300 1178	1			INTERCOOLER, Turbo Air ***
11	5300 1182	1			BRACKET, Intercooler Mounting
12	5200 1849	1			DUCT, Intercooler Air
13	5200 2180	1			HOSE, Manifold Inlet
14	5300 1180	1			HOSE, Turbo Outlet
15	J068 7550	2			GROMMET
16	3420 2071	4			SCREW
17	3420 1918	3			NUT
18	3420 1597	3			RIVET

MODEL CODES

16=Cherokee 2 Dr.(1981-83)
17=Cherokee 2 Dr.(1981-83)
73=Cherokee 2WD-2 Dr.(1984-86)
74=Cherokee 2WD-4 Dr.(1984-86)
18=Cherokee 4 Dr.(1981-83)
77=Cherokee 4WD-2 Dr.(1984-86)
78=Cherokee 4WD-4 Dr.(1984-86)
85=CJ-5 (1981-83)
86=CJ-6(1981)
87=CJ-7(1981-86)
88=CJ-8, Scrambler(1981-86)
64=Comanche 2WD-6 Ft. Box(1986)
66=Comanche 2WD-7 Ft. Box(1986)
63=Comanche 4WD-6 Ft. Box(1986)
65=Comanche 4WD-7 Ft. Box(1986)
15=Grand Wagoneer 4 Dr.(1984-86)
25=J-10 Truck 7 Ft. Box(1981-84)
26=J10 Truck 8 Ft. Box(1981-86)
27=J-20 Truck 8 Ft. Box(1981-86)
15=Wagoneer 4 Dr.(1981-83)
75=Wagoneer 4WD-4 Dr.(1984-86)

BODY
CJ=CJ-5, CJ-6, CJ-7, CJ-8, Scrambler(1981-86)
MJ=Comanche Pickup(1986)

STYLES
SJ=Wagoneer(1981-83), Grand Wagoneer(1984-86), Cherokee(1981-83), J-10, J-20(1981-86)
XJ=Wagoneer(1984-86), Cherokee(1984-86)

AR = Use as Required - = Non Illustrated Part P.A.R. = Paint as Required

« RETURN TO GROUP INDEX

AIR CLEANER FOUR CYLINDER GAS, CARBURETED XJ CHEROKEE, XJ WAGONEER, COMANCHE
Figure 14-4100

81J14 4100

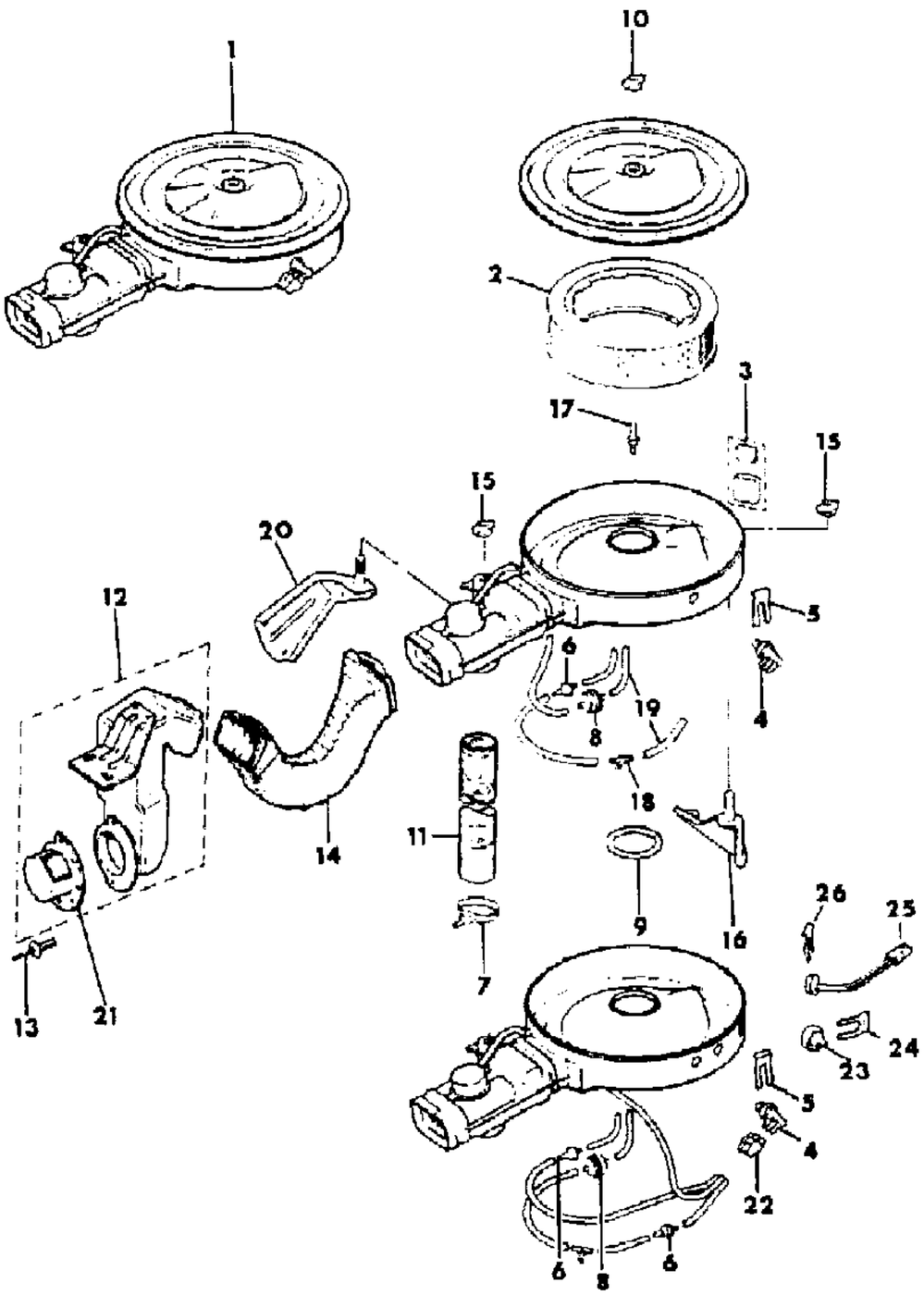

ITEM	PART NUMBER	QTY	BODY	MODEL	DESCRIPTION
1					AIR CLEANER
	5300 0259	1			US
	5300 0618	1			CANADA
	5300 1837	1			Non-Regulated Market
2					ELEMENT, Air Cleaner
	8350 0999	1			1984
	5300 2576	1			1985: US
	8350 0999	1			1985: CANADA
	8350 0999	1			1985-86: Non-Regulated Markets
3	J323 6695	1			FILTER PACKAGE
4	J323 7457	1			SWITCH, Thermal Vacuum
5	J400 6571	1			CLIP
6	J322 8426	AR			VALVE, Check
7	J320 3078	2			CLAMP, Hose
8	J323 5938	1			VALVE, Reverse Delay
9	3300 1475	1			GASKET, Air Cleaner
10	3420 1676	1			NUT
11	3300 3391	1			DUCT, Air
12	3300 2112	1			ADAPTER, Air Duct
13					RIVET
	3420 1631	2			1984-85
	3420 1621	2			1986
14	3300 2113	1			TUBE, Air Intake
15	3420 1918	2			NUT
16	3300 1611	1			BRACKET
17	5300 0683	1			STUD
18	8310 0020	1			CONNECTOR
19	J812 5812	AR			HOSE, Bulk, 3/16" I.D.
20					BRACKET
	3300 1615	1			With Factory Installed Air Conditioning, with Power Steering
	3300 1613	1			Without Factory Installed Air Conditioning, with Power Steering
	3300 1723	1			Without Power Steering
21	3300 1705	1			DEFLECTOR, Air ***
22	J323 5265	1			CONNECTOR
23	J323 5329	1			SWITCH, Thermal Vacuum
24	J400 6334	1			CLIP
25	3300 0630	1			SWITCH, Thermal Electric
26	J400 6784	1			CLIP

MODEL CODES

16=Cherokee 2 Dr.(1981-83)	78=Cherokee 4WD-4 Dr.(1984-86)	64=Comanche 2WD-6 Ft. Box(1986)	25=J-10 Truck 7 Ft. Box(1981-84)
17=Cherokee 2 Dr.(1981-83)	85=CJ-5 (1981-83)	66=Comanche 2WD-7 Ft. Box(1986)	26=J10 Truck 8 Ft. Box(1981-86)
73=Cherokee 2WD-2 Dr.(1984-86)	86=CJ-6(1981)	63=Comanche 4WD-6 Ft. Box(1986)	27=J-20 Truck 8 Ft. Box(1981-86)
74=Cherokee 2WD-4 Dr.(1984-86)	87=CJ-7(1981-86)	65=Comanche 4WD-7 Ft. Box(1986)	15=Wagoneer 4 Dr.(1981-83)
18=Cherokee 4 Dr.(1981-83)	88=CJ-8, Scrambler(1981-86)	15=Grand Wagoneer 4 Dr.(1984-86)	75=Wagoneer 4WD-4 Dr.(1984-86)
77=Cherokee 4WD-2 Dr.(1984-86)			

BODY
CJ=CJ-5, CJ-6, CJ-7, CJ-8, Scrambler(1981-86)
MJ=Comanche Pickup(1986)

STYLES
SJ=Wagoneer(1981-83), Grand Wagoneer(1984-86), Cherokee(1981-83), J-10, J-20(1981-86)
XJ=Wagoneer(1984-86), Cherokee(1984-86)

AR = Use as Required - = Non Illustrated Part P.A.R. = Paint as Required

« RETURN TO GROUP INDEX

AIR CLEANER 1986 FOUR CYLINDER GAS, INJECTED XJ CHEROKEE, XJ WAGONEER, COMANCHE
Figure 14-4200

81J14 4200

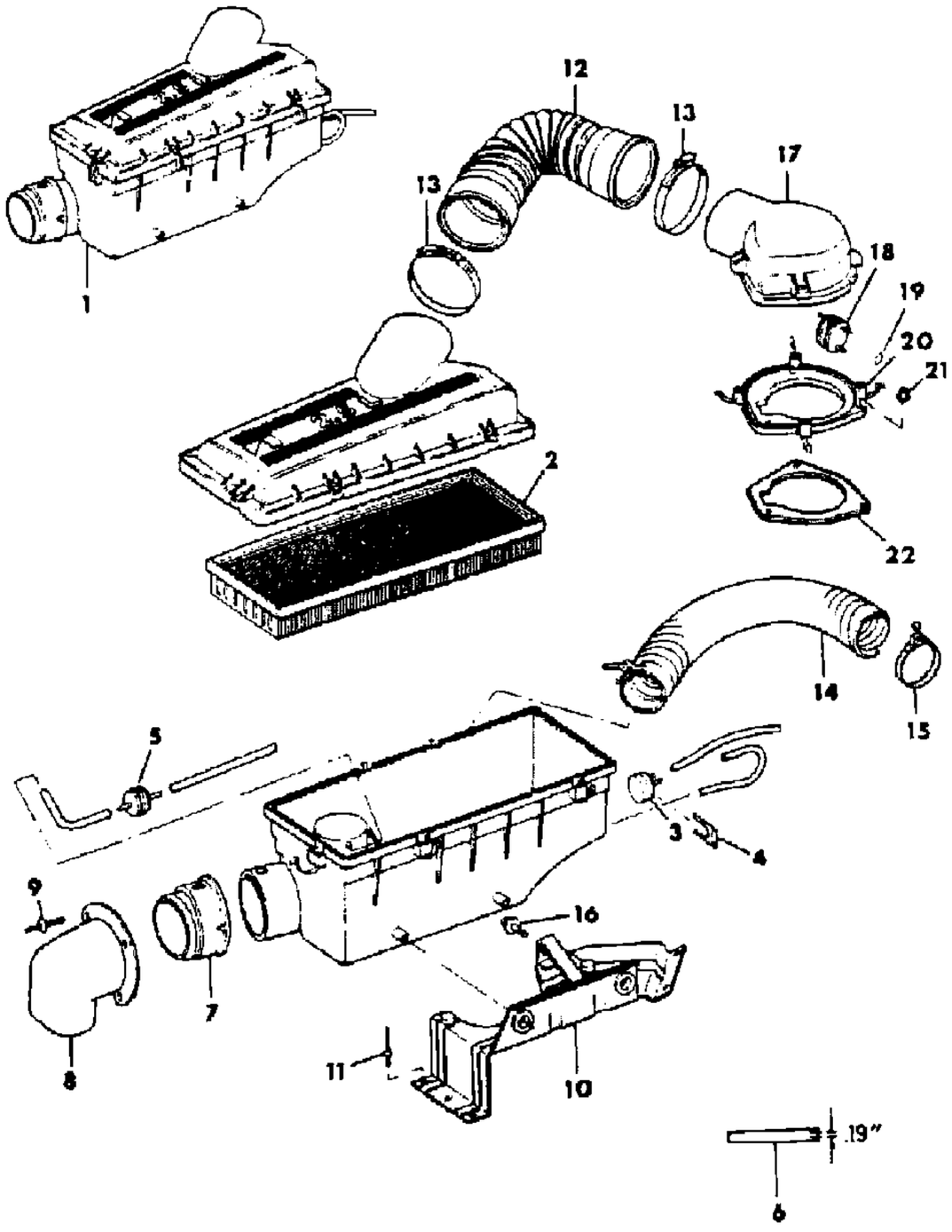

ITEM	PART NUMBER	QTY	BODY	MODEL	DESCRIPTION
1	5300 2172	1			AIR CLEANER
2	5300 2184	1			ELEMENT, Air Cleaner
3	5300 2951	1			SWITCH, Thermal Vacuum
4	J400 6334	1			CLIP
5	J323 5938	1			VALVE, Reverse Delay, Grey
6	J812 5995	AR			HOSE, Bulk
7	5300 2853	1			ADAPTER
8	5300 3948	1			DUCT, Fresh Air
9	3420 1353	3			RIVET
10	5300 2176	1			BRACKET, Mounting
11	3420 1597	5			RIVET
12	5300 2180	1			TUBE, Air Intake
13	J400 6643	2			CLAMP, Hose
14	5300 2186	1			TUBE, Hot Air
15	J320 3078	1			CLAMP, Hose
16	3420 1790	1			SCREW
17	5300 2179	1			ADAPTER, Air Intake
18	5300 3938	1			SENSOR, Intake Air Temp
19	J400 1714	2			NUT
20	5300 2851	1			ADAPTER, Air Intake
21	3420 1446	3			NUT
22	3300 0244	1			GASKET, Adapter

MODEL CODES

16=Cherokee 2 Dr.(1981-83)
17=Cherokee 2 Dr.(1981-83)
73=Cherokee 2WD-2 Dr.(1984-86)
74=Cherokee 2WD-4 Dr.(1984-86)
18=Cherokee 4 Dr.(1981-83)
77=Cherokee 4WD-2 Dr.(1984-86)
78=Cherokee 4WD-4 Dr.(1984-86)
85=CJ-5 (1981-83)
86=CJ-6(1981)
87=CJ-7(1981-86)
88=CJ-8, Scrambler(1981-86)
64=Comanche 2WD-6 Ft. Box(1986)
66=Comanche 2WD-7 Ft. Box(1986)
63=Comanche 4WD-6 Ft. Box(1986)
65=Comanche 4WD-7 Ft. Box(1986)
15=Grand Wagoneer 4 Dr.(1984-86)
25=J-10 Truck 7 Ft. Box(1981-84)
26=J10 Truck 8 Ft. Box(1981-86)
27=J-20 Truck 8 Ft. Box(1981-86)
15=Wagoneer 4 Dr.(1981-83)
75=Wagoneer 4WD-4 Dr.(1984-86)

BODY
CJ=CJ-5, CJ-6, CJ-7, CJ-8, Scrambler(1981-86)
MJ=Comanche Pickup(1986)

STYLES
SJ=Wagoneer(1981-83), Grand Wagoneer(1984-86), Cherokee(1981-83), J-10, J-20(1981-86)
XJ=Wagoneer(1984-86), Cherokee(1984-86)

AR = Use as Required - = Non Illustrated Part P.A.R. = Paint as Required

« RETURN TO GROUP INDEX

AIR CLEANER SIX CYLINDER, V-6 XJ CHEROKEE, XJ WAGONEER, COMANCHE
Figure 14-4300

81J14 4300

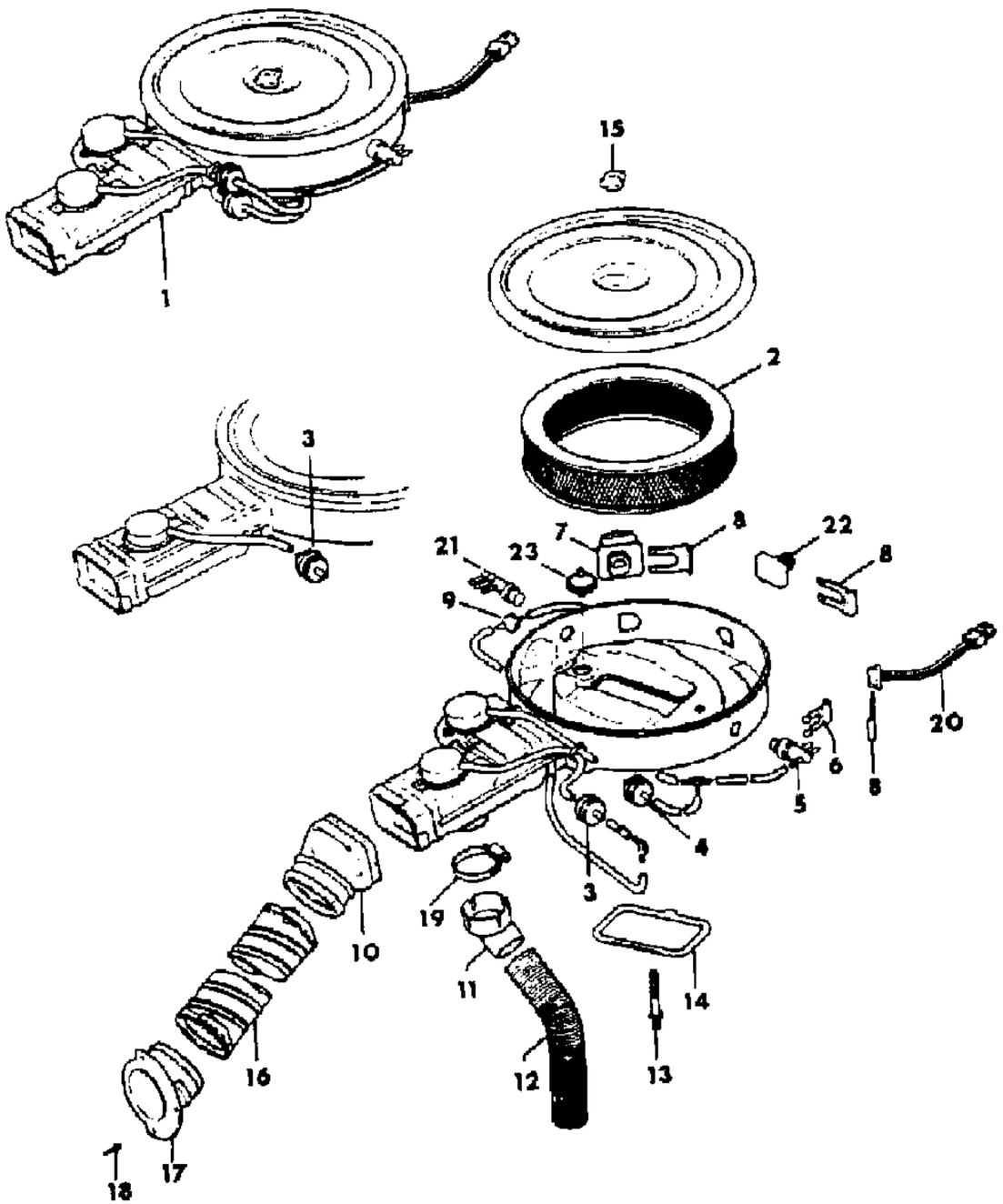

ITEM	PART NUMBER	QTY	BODY	MODEL	DESCRIPTION
1					AIR CLEANER
	5300 0619	1			1984: US-49 States, CANADA
	5300 2369	1			1985: EXPORT ***
	5300 2742	1			1985-86: US-49 States, CANADA
	5300 1823	1			1984-86: US-California
2	J899 1386	1			ELEMENT, Air Cleaner
3	J323 5938	1			VALVE, Reverse Delay, Grey
4	J323 7141	1			VALVE, Reverse Delay, Yellow
5	5300 0714	1			SWITCH, Thermal Vacuum, US-49 States
6	J400 6571	2			CLIP
7	5300 0715	1			FILTER, Ventilation Valve
8	J400 6784	3			CLIP
9	J322 8426	1			VALVE, Check, Black
10	3300 1513	1			ADAPTER, Air Intake
11	5300 0722	1			ADAPTER, Hot Air
12	5300 4114	12			TUBE, Hot Air
13	3300 0819	1			STUD
14	J324 2297	1			GASKET, Air Cleaner
15	3420 1676	1			NUT, Wing
16	5300 0260	1			TUBE
17	3300 1706	1			ADAPTER
18	3420 1631	3			RIVET
19	J320 3079	1			CLAMP, Hose
20	3300 1974	1			SWITCH, Thermal Electric
21	J323 7457	1			SWITCH, Thermal Vacuum, US-49 States
22	5300 0716	1			DEFLECTOR, Air ***
23	5300 2950	1			SENSOR, Intake Air Temp

MODEL CODES
16=Cherokee 2 Dr.(1981-83)
17=Cherokee 2 Dr.(1981-83)
73=Cherokee 2WD-2 Dr.(1984-86)
74=Cherokee 2WD-4 Dr.(1984-86)
18=Cherokee 4 Dr.(1981-83)
77=Cherokee 4WD-2 Dr.(1984-86)
78=Cherokee 4WD-4 Dr.(1984-86)
85=CJ-5 (1981-83)
86=CJ-6(1981)
87=CJ-7(1981-86)
88=CJ-8, Scrambler(1981-86)
64=Comanche 2WD-6 Ft. Box(1986)
66=Comanche 2WD-7 Ft. Box(1986)
63=Comanche 4WD-6 Ft. Box(1986)
65=Comanche 4WD-7 Ft. Box(1986)
15=Grand Wagoneer 4 Dr.(1984-86)
25=J-10 Truck 7 Ft. Box(1981-84)
26=J10 Truck 8 Ft. Box(1981-86)
27=J-20 Truck 8 Ft. Box(1981-86)
15=Wagoneer 4 Dr.(1981-83)
75=Wagoneer 4WD-4 Dr.(1984-86)

BODY
CJ=CJ-5, CJ-6, CJ-7, CJ-8, Scrambler(1981-86)
MJ=Comanche Pickup(1986)

STYLES
SJ=Wagoneer(1981-83), Grand Wagoneer(1984-86), Cherokee(1981-83), J-10, J-20(1981-86)
XJ=Wagoneer(1984-86), Cherokee(1984-86)

AR = Use as Required - = Non Illustrated Part P.A.R. = Paint as Required

« RETURN TO GROUP INDEX

CARBURETOR AND COMPONENT PARTS FOUR CYLINDER XJ CHEROKEE, XJ WAGONEER, COMANCHE
Figure 14-4400

81J14 4400

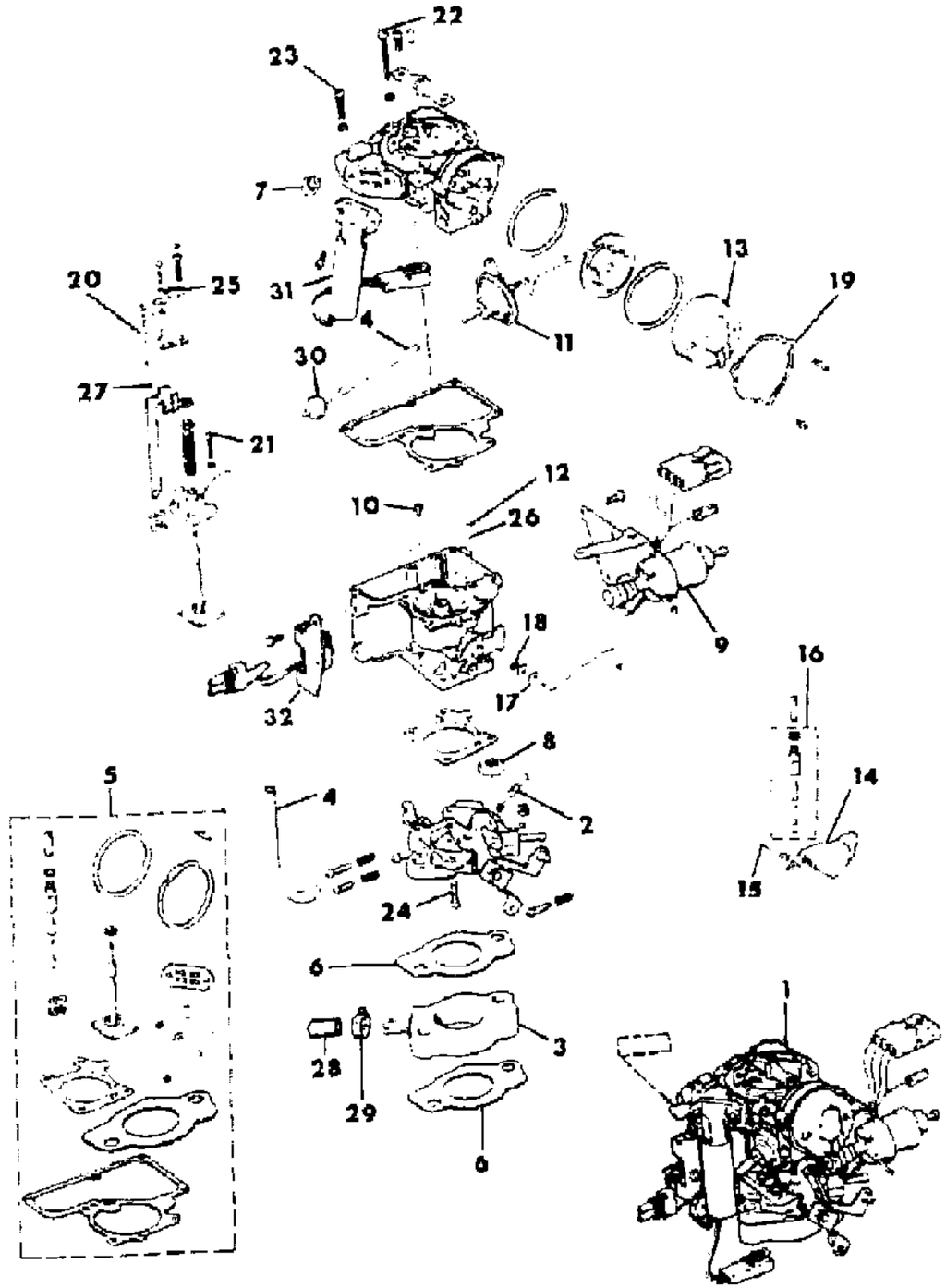

ITEM	PART NUMBER	QTY	BODY	MODEL	DESCRIPTION
1					CARBURETOR
					Manual Transmission
	5300 2637	1			1984: US, CANADA, Tagged 7700
	3300 2117	1			1984: High Altitude, Tagged 7702
	5300 2637	1			1985: US, CANADA, Tagged 7704
	5300 2639	1			1985: HIgh Altitude, Tagged 7706
	5300 2641	1			1985-86: Non-Regulated Markets, Tagged 7708
					Automatic Transmission
	5300 2638	1			1984: US, Canada, Tagged 7701
	5300 2640	1			1984: High Altitude, Tagged 7703
	5300 2638	1			1985: US-49 States, CANADA, Tagged 7705
	5300 2640	1			1985: High Altitude, US-California, Tagged 7707
2	8350 0455	1			SCREW, Idle Mixture
3	5300 0616	1			INSULATOR, Carburetor
4	J812 5812	AR			HOSE, Bulk
5	8330 0085	1			REPAIR PACKAGE, Carburetor
6	5300 0617	2			GASKET, Carburetor
7	J013 7406	1			CONNECTOR
8	J012 4925	2			NUT
9					SOLENOID, Throttle
	8350 0466	1			1984
	8350 0466	1			1985: Without Non-Regulated Markets
	8350 2116	1			1985-86: Non-Regulated Markets
10					JET, Low Speed
	8350 0928	1			1984-85: US, CANADA, with Manual Transmission
	8350 0928	1			1984: US, CANADA, with Automatic Transmission
	8350 0928	1			1985: US, 49-States, CANADA, with Automatic Transmission
	8350 0929	1			1984-85: High Altitude
	8350 0929	1			1985: US-California, with Automatic Transmission
	8350 2113	1			1985-86: Non-Regulated Markets
11					DIAPHRAGM, Choke
	8350 1002	1			1984: US, CANADA, High Altitude
	8350 2112	1			1985:
	8350 2112	1			1986: Non-Regulated Markets
12	J812 0149	1			WEIGHT, Check Ball ***
13					COIL, Carburetor Choke ***
					Manual Transmission
	8350 0921	1			1984-85: US, CANADA
	8350 0921	1			1985-86: Non-Regulated Markets

MODEL CODES

16=Cherokee 2 Dr.(1981-83)	78=Cherokee 4WD-4 Dr.(1984-86)	64=Comanche 2WD-6 Ft. Box(1986)	25=J-10 Truck 7 Ft. Box(1981-84)
17=Cherokee 2 Dr.(1981-83)	85=CJ-5 (1981-83)	66=Comanche 2WD-7 Ft. Box(1986)	26=J10 Truck 8 Ft. Box(1981-86)
73=Cherokee 2WD-2 Dr.(1984-86)	86=CJ-6(1981)	63=Comanche 4WD-6 Ft. Box(1986)	27=J-20 Truck 8 Ft. Box(1981-86)
74=Cherokee 2WD-4 Dr.(1984-86)	87=CJ-7(1981-86)	65=Comanche 4WD-7 Ft. Box(1986)	15=Wagoneer 4 Dr.(1981-83)
18=Cherokee 4 Dr.(1981-83)	88=CJ-8, Scrambler(1981-86)	15=Grand Wagoneer 4 Dr.(1984-86)	75=Wagoneer 4WD-4 Dr.(1984-86)
77=Cherokee 4WD-2 Dr.(1984-86)			

BODY
CJ=CJ-5, CJ-6, CJ-7, CJ-8, Scrambler(1981-86)
MJ=Comanche Pickup(1986)

STYLES
SJ=Wagoneer(1981-83), Grand Wagoneer(1984-86), Cherokee(1981-83), J-10, J-20(1981-86)
XJ=Wagoneer(1984-86), Cherokee(1984-86)

AR = Use as Required - = Non Illustrated Part P.A.R. = Paint as Required

CARBURETOR AND COMPONENT PARTS FOUR CYLINDER XJ CHEROKEE, XJ WAGONEER, COMANCHE
Figure 14-4400

81J14 4400

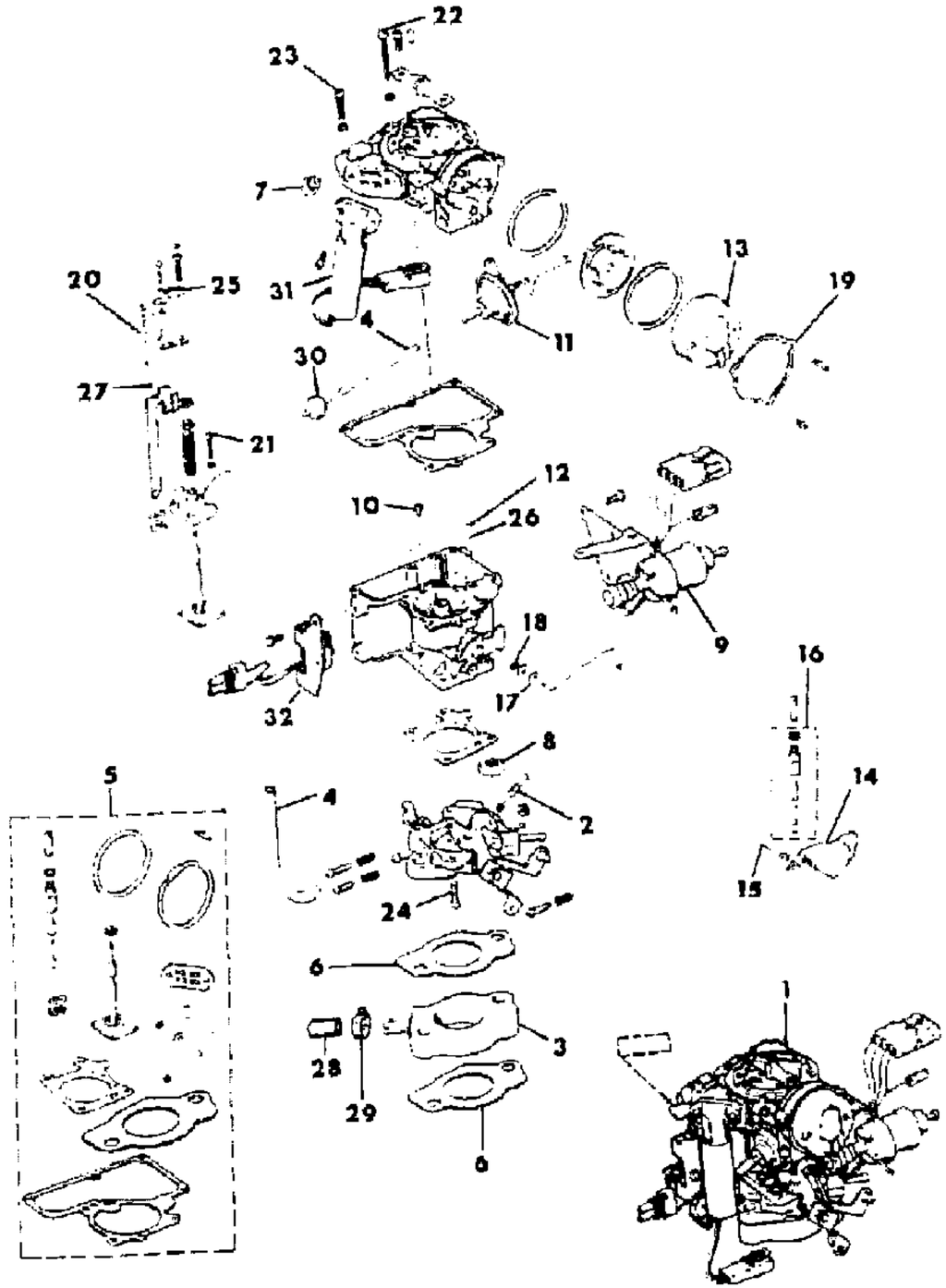

ITEM	PART NUMBER	QTY	BODY	MODEL	DESCRIPTION
	8350 0927	1			1984-85: High Altitude
					Automatic Transmission
	8350 0921	1			1984: US, CANADA
	8350 0921	1			1985: US-49 States, CANADA
	8350 0921	1			1986: Non-Regulated Markets
	8350 0927	1			1984-85: High Altitude
	8350 0927	1			1985: US-California
14	8350 0454	1			FLOAT, Carburetor
15	J812 4315	1			PIN, Float
16	8350 0932	1			NEEDLE, Incl. Seat ***
17	8350 0456	1			BUSHING, Choke Rod
18	J812 1249	1			CLIP
19	J812 6555	1			RETAINER, Choke Coil
20					ROD, Metering
	8350 0459	1			1984; 1985: Without Non-Regulated Markets
	8350 2114	1			1985-86: Non-Regulated Markets
21	J320 6433	4			SCREW
22	J320 7738	3			SCREW
23	J812 5858	4			SCREW
24	J812 0222	4			SCREW
25	8350 0460	1			ARM, Metering Rod
26	J812 0145	1			BALL, Discharge Check
27					JET, Metering Rod
	8350 0461	1			1984; 1985: Without Non-Regulated Markets
	8350 2115	1			1985-86: Non-Regulated Markets
28	J322 7272	1			CAP
29	3300 0785	1			CLAMP
30	J323 7293	1			VALVE, Delay
31	8350 0919	1			SOLENOID, Pulse, Without Non-Regulated Markets
32	8350 0922	1			SENSOR, Throttle, Without Non-Regulated Markets

MODEL CODES

16=Cherokee 2 Dr.(1981-83)
17=Cherokee 2 Dr.(1981-83)
73=Cherokee 2WD-2 Dr.(1984-86)
74=Cherokee 2WD-4 Dr.(1984-86)
18=Cherokee 4 Dr.(1981-83)
77=Cherokee 4WD-2 Dr.(1984-86)
78=Cherokee 4WD-4 Dr.(1984-86)
85=CJ-5 (1981-83)
86=CJ-6(1981)
87=CJ-7(1981-86)
88=CJ-8, Scrambler(1981-86)
64=Comanche 2WD-6 Ft. Box(1986)
66=Comanche 2WD-7 Ft. Box(1986)
63=Comanche 4WD-6 Ft. Box(1986)
65=Comanche 4WD-7 Ft. Box(1986)
15=Grand Wagoneer 4 Dr.(1984-86)
25=J-10 Truck 7 Ft. Box(1981-84)
26=J10 Truck 8 Ft. Box(1981-86)
27=J-20 Truck 8 Ft. Box(1981-86)
15=Wagoneer 4 Dr.(1981-83)
75=Wagoneer 4WD-4 Dr.(1984-86)

BODY
CJ=CJ-5, CJ-6, CJ-7, CJ-8, Scrambler(1981-86)
MJ=Comanche Pickup(1986)

STYLES
SJ=Wagoneer(1981-83), Grand Wagoneer(1984-86), Cherokee(1981-83), J-10, J-20(1981-86)
XJ=Wagoneer(1984-86), Cherokee(1984-86)

AR = Use as Required - = Non Illustrated Part P.A.R. = Paint as Required

« RETURN TO GROUP INDEX

CARBURETOR AND COMPONENT PARTS SIX CYLINDER, V-6, 49 STATES XJ CHEROKEE, XJ WAGONEER, COMANCHE
Figure 14-4500

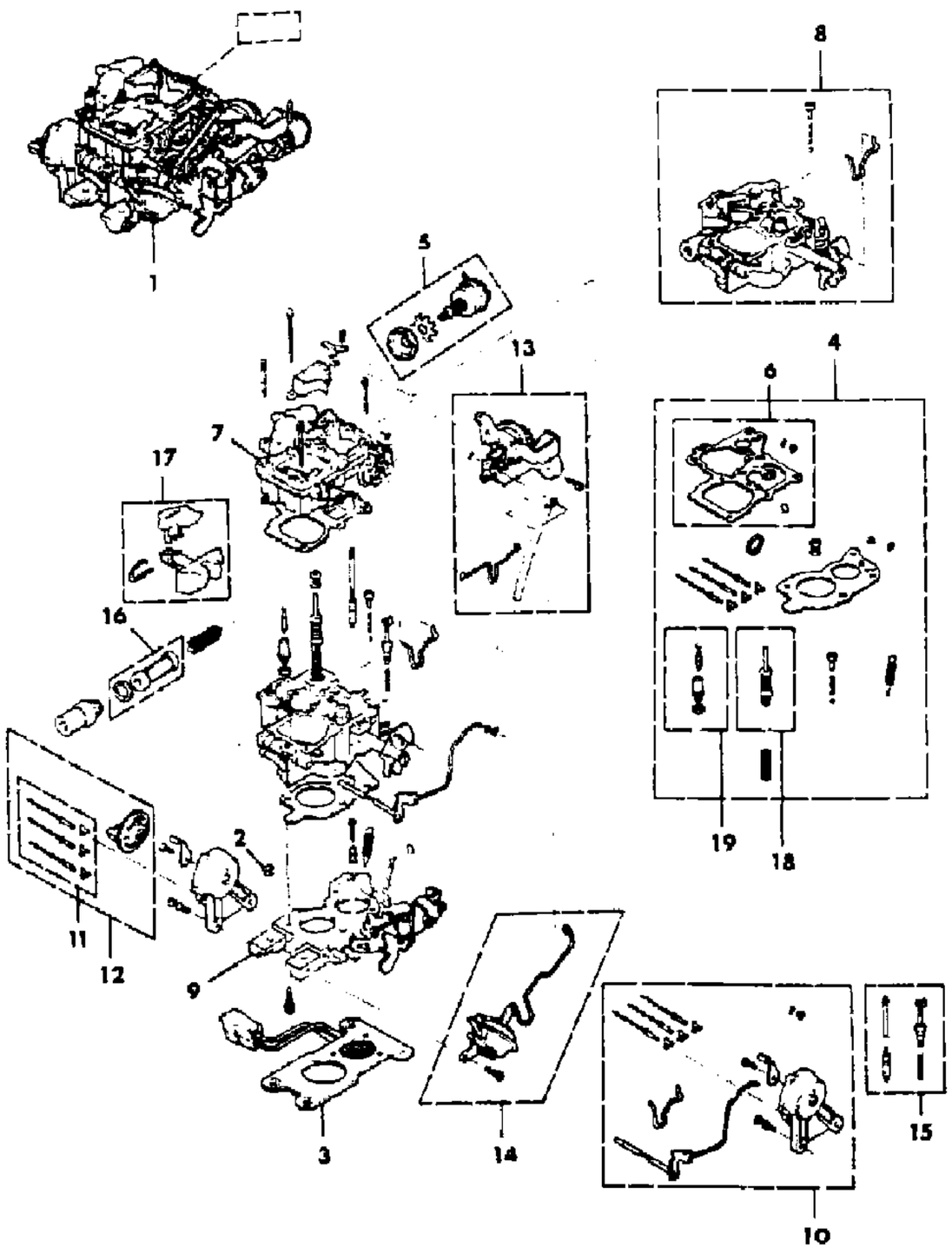

ITEM	PART NUMBER	QTY	BODY	MODEL	DESCRIPTION
1					CARBURETOR
					Manual Transmission
	5300 2229	1			1984: US-49 States, CANADA, Tagged 4501
	3300 1894	1			1984: High Altitude, Tagged 4583
	5300 2227	1			1985: Economic Commission of Europe, Switzerland, Sweden, Tagged 5385
	5300 2225	1			1985-86: High Altitude, Tagged 5383
	5300 2229	1			1985-86: US-49 Stated, CANADA, Non-Regulated Markets, Tagged 5381
					Automatic Transmission
	5300 2230	1			1984: US-49 States, CANADA, Tagged 4580
	5300 2226	1			1984: High Altitude, Tagged 4582
	5300 2227	1			1985: Economic Commission of Europe, Switzerland, Sweden, Tagged 5385
	5300 2226	1			1985-86: High Altitude, Tagged 5382
	5300 2230	1			1985-86: US-49 States, CANADA, Non-Regulated Markets, Tagged 5380
2	S150 1059	4			NUT
3	3300 1998	1			INSULATOR, Carburetor, Incl. Heater
4	8350 1011	1			REPAIR PACKAGE, Carburetor
5	8350 1026	1			ACTUATOR, Throttle
6	8350 1013	1			GASKET PACKAGE, Air Horn
7					AIR HORN ***
	8350 1014	1			1984: US-49 States, CANADA, High Altitude
	8350 1014	1			1985: Economic Commission of Europe, Switzerland, Sweden
	8350 1014	1			1985-86: High Altitude, with Manual Transmission
	8350 2213	1			1985-86: HIgh Altitude, with Automatic Transmission
	8350 1932	1			1985-86: US-49 States, CANADA, Non-Regulated Markets
8					BOWL, Float ***
					Manual Transmission
	8350 1027	1			1984: US-49 States, CANADA, High Altitude
	8350 1027	1			1985: US-49 States, CANADA, High Altitude, Non-Regulated Markets
	8350 1027	1			1986: US-49 States
					Automatic Transmission
	8350 1015	1			1984: US-49 States, CANADA
	8350 1015	1			1985: Economic Commission of Europe, Switzerland, Sweden
	8350 1015	1			1985-86: US-49 States, CANADA, Non-Regulated Markets
	8350 1933	1			1985-86: High Altitude, with Automatic Transmission

MODEL CODES

16=Cherokee 2 Dr.(1981-83)
17=Cherokee 2 Dr.(1981-83)
73=Cherokee 2WD-2 Dr.(1984-86)
74=Cherokee 2WD-4 Dr.(1984-86)
18=Cherokee 4 Dr.(1981-83)
77=Cherokee 4WD-2 Dr.(1984-86)
78=Cherokee 4WD-4 Dr.(1984-86)
85=CJ-5 (1981-83)
86=CJ-6(1981)
87=CJ-7(1981-86)
88=CJ-8, Scrambler(1981-86)
64=Comanche 2WD-6 Ft. Box(1986)
66=Comanche 2WD-7 Ft. Box(1986)
63=Comanche 4WD-6 Ft. Box(1986)
65=Comanche 4WD-7 Ft. Box(1986)
15=Grand Wagoneer 4 Dr.(1984-86)
25=J-10 Truck 7 Ft. Box(1981-84)
26=J10 Truck 8 Ft. Box(1981-86)
27=J-20 Truck 8 Ft. Box(1981-86)
15=Wagoneer 4 Dr.(1981-83)
75=Wagoneer 4WD-4 Dr.(1984-86)

BODY
CJ=CJ-5, CJ-6, CJ-7, CJ-8, Scrambler(1981-86)
MJ=Comanche Pickup(1986)

STYLES
SJ=Wagoneer(1981-83), Grand Wagoneer(1984-86), Cherokee(1981-83), J-10, J-20(1981-86)
XJ=Wagoneer(1984-86), Cherokee(1984-86)

AR = Use as Required - = Non Illustrated Part P.A.R. = Paint as Required

CARBURETOR AND COMPONENT PARTS SIX CYLINDER, V-6, 49 STATES XJ CHEROKEE, XJ WAGONEER, COMANCHE
Figure 14-4500

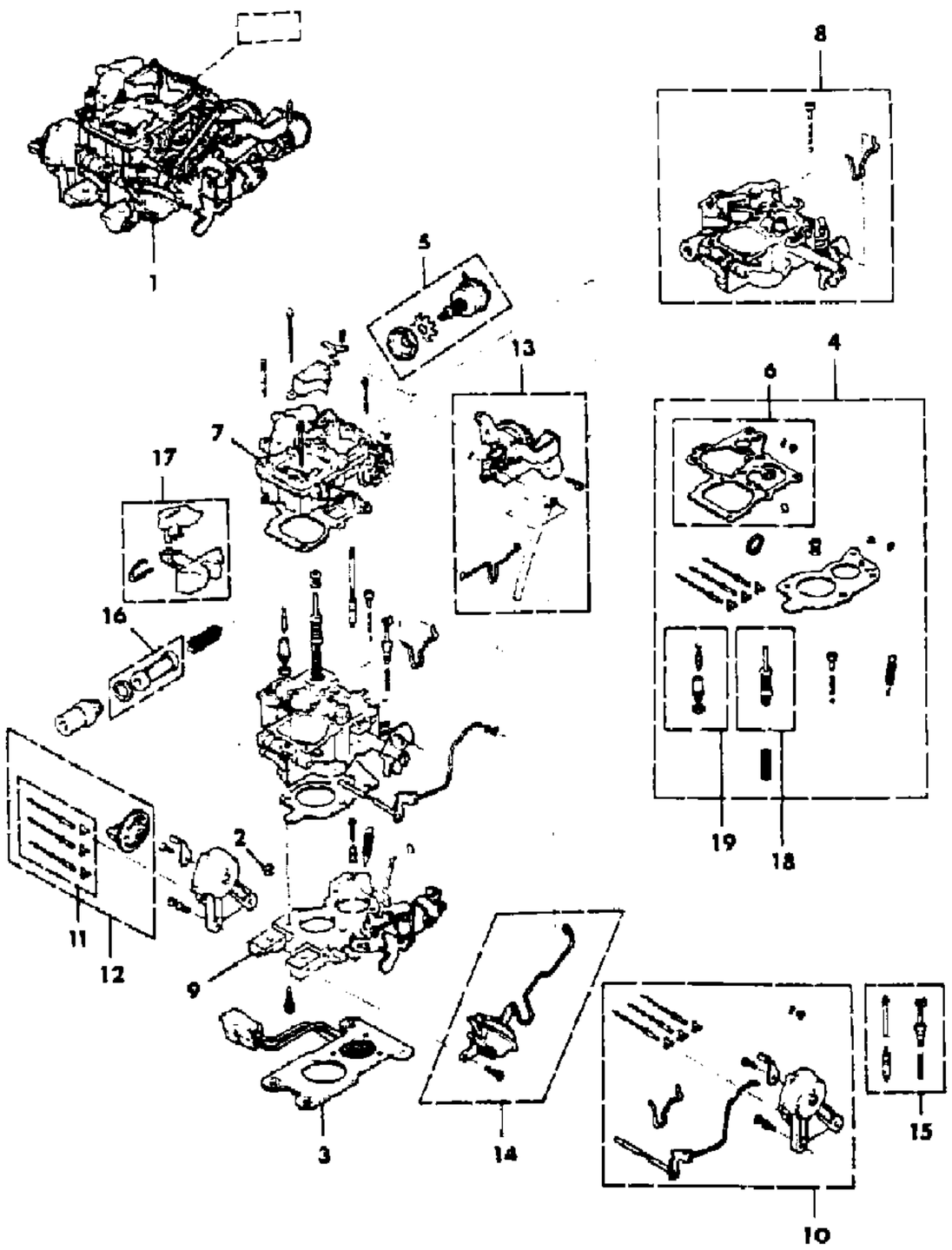

ITEM	PART NUMBER	QTY	BODY	MODEL	DESCRIPTION
9					BODY, Throttle
					Manual Transmission
	8350 1028	1			1984: US-49 States, CANADA, High Altitude
	8350 1028	1			1985-86: US-49 States, CANADA, High Altitude
					Automatic Transmission
	8350 1016	1			1984: US-49 States, CANADA, High Altitude
	8350 1935	1			1985: High Altitude, Economic Commission of Europe, Switzerland, Sweden
	8350 1935	1			1986: High Altitude
	8350 2212	1			1985-86: US-49 States, Non-Regulated Markets
10	8350 1017	1			HOUSING ASSY, Choke ***
11	J813 3476	1			RETAINER PACKAGE, Choke
12	8350 1018	1			COVER PACKAGE, Choke ***
13	8350 1019	1			DIAPHRAGM, Primary Vacuum
14	8350 1020	1			DIAPHRAGM, Secondary Vacuum
15					JET PACKAGE, Metering ***
	8350 1021	1			1984: US-49 States, CANADA
	8350 1067	1			1984: High Altitude
	8350 1021	1			1985-86: US-49 States, CANADA, with Manual Transmission
	8350 2111	1			1985-86: US-49 States, CANADA, Non-Regulated Markets, with Automatic Transmission
	8350 1936	1			1985-86: High Altitude, with Manual Transmission
	8350 1067	1			1985-86: High Altitude, with Automatic Transmission
16	8330 0054	1			FILTER PACKAGE, Fuel
17	8350 1023	1			FLOAT PACKAGE, Carburetor ***
18	8350 1024	1			PUMP ASSY, Accelerator ***
19	8350 1025	1			NEEDLE, Incl. Seat ***

MODEL CODES

16=Cherokee 2 Dr.(1981-83)	78=Cherokee 4WD-4 Dr.(1984-86)	64=Comanche 2WD-6 Ft. Box(1986)	25=J-10 Truck 7 Ft. Box(1981-84)
17=Cherokee 2 Dr.(1981-83)	85=CJ-5 (1981-83)	66=Comanche 2WD-7 Ft. Box(1986)	26=J10 Truck 8 Ft. Box(1981-86)
73=Cherokee 2WD-2 Dr.(1984-86)	86=CJ-6(1981)	63=Comanche 4WD-6 Ft. Box(1986)	27=J-20 Truck 8 Ft. Box(1981-86)
74=Cherokee 2WD-4 Dr.(1984-86)	87=CJ-7(1981-86)	65=Comanche 4WD-7 Ft. Box(1986)	15=Wagoneer 4 Dr.(1981-83)
18=Cherokee 4 Dr.(1981-83)	88=CJ-8, Scrambler(1981-86)	15=Grand Wagoneer 4 Dr.(1984-86)	75=Wagoneer 4WD-4 Dr.(1984-86)
77=Cherokee 4WD-2 Dr.(1984-86)			

BODY
CJ=CJ-5, CJ-6, CJ-7, CJ-8, Scrambler(1981-86)
MJ=Comanche Pickup(1986)

STYLES
SJ=Wagoneer(1981-83), Grand Wagoneer(1984-86), Cherokee(1981-83), J-10, J-20(1981-86)
XJ=Wagoneer(1984-86), Cherokee(1984-86)

AR = Use as Required - = Non Illustrated Part P.A.R. = Paint as Required

« RETURN TO GROUP INDEX

CARBURETOR AND COMPONENT PARTS SIX CYLINDER, V-6, CALIFORNIA XJ CHEROKEE, XJ WAGONEER, COMANCHE
Figure 14-4600

81J14 4600

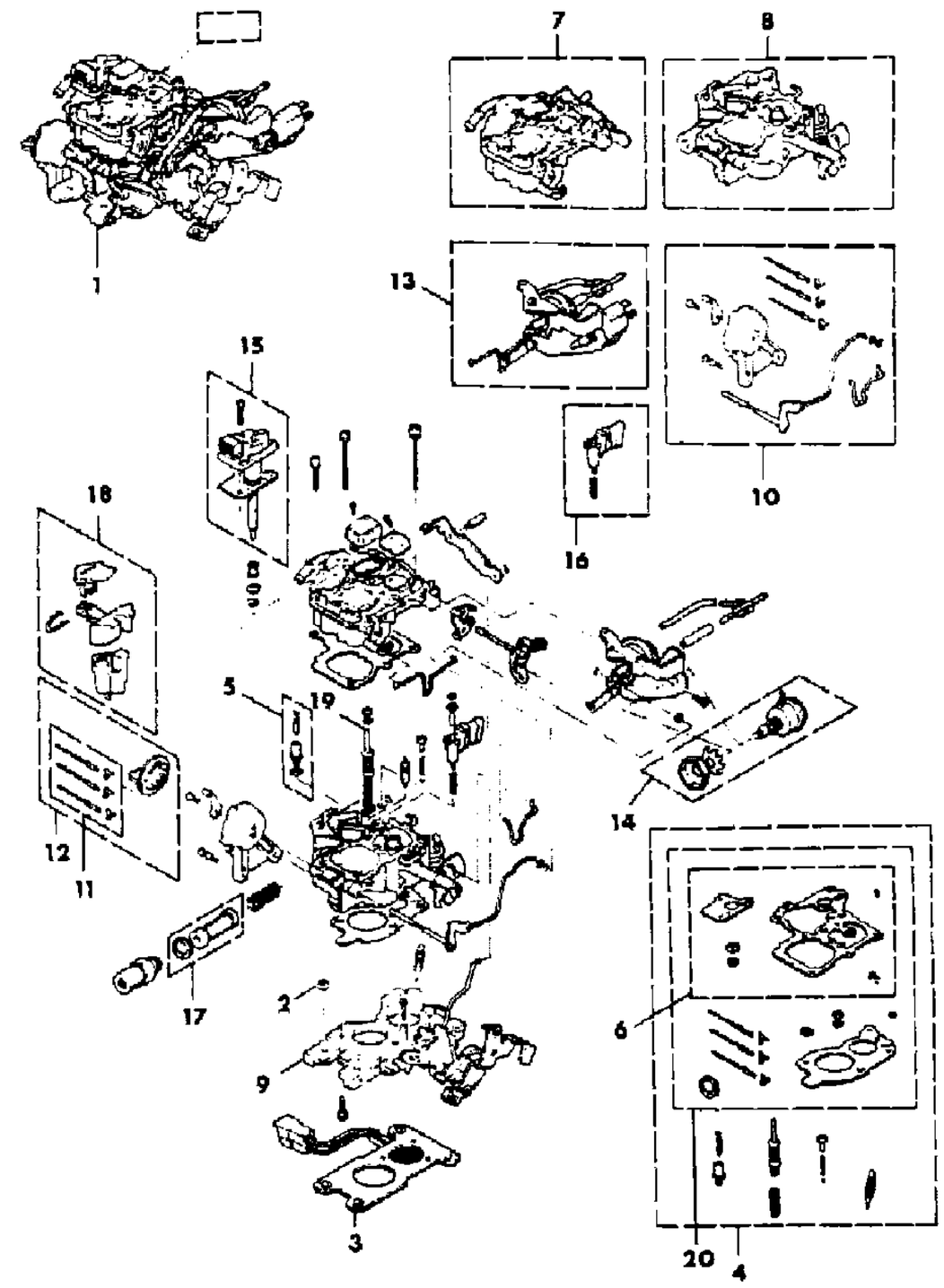

ITEM	PART NUMBER	QTY	BODY	MODEL	DESCRIPTION
1					CARBURETOR
					Manual Transmission
	5300 2751	1			1985: Tagged 5006
	5300 4303	1			1986: Tagged 6081
					Automatic Transmission
	5300 2231	1			1984: Tagged 4584
	5300 2231	1			1985-86: Tagged 5388
2	S150 1059	4			NUT
3	3300 1998	1			INSULATOR, Carburetor, Incl. Heater
4	8350 1938	1			REPAIR PACKAGE, Carburetor
5	8350 1025	1			NEEDLE, Incl. Seat ***
6	8350 0926	1			GASKET PACKAGE, Air Horn
7					AIR HORN ***
	8350 1034	1			1984-85
	8350 2885	1			1986: With Manual Transmission
	8350 1034	1			1986: With Automatic Transmission
8					BOWL, Float ***
	8350 1035	1			1984-85
	8350 2886	1			1986: With Manual Transmission
	8350 1035	1			1986: With Automatic Transmission
9					BODY, Throttle
	8350 1939	1			1984
	8350 2162	1			1985: With Manual Transmission
	8350 1939	1			1985: With Automatic Transmission
	8350 1939	1			1986
10					HOUSING ASSY, Choke ***
	8350 1017	1			1984
	8350 2163	1			1985-86: With Manual Transmission
	8350 1017	1			1985-86: With Automatic Transmission
11	J813 3476	1			RETAINER PACKAGE, Choke
12					COVER PACKAGE, Choke ***
	8350 1018	1			1984-85
	8350 2887	1			1986: With Manual Transmission
	8350 1018	1			1986: With Automatic Transmission
13	8350 1019	1			DIAPHRAGM, Primary Vacuum
14	8350 1026	1			ACTUATOR, Throttle
15	J813 3504	1			SOLENOID, Mixture Control
16	8350 1038	1			SENSOR, Throttle
17	8330 0054	1			FILTER PACKAGE, Fuel

MODEL CODES

16=Cherokee 2 Dr.(1981-83)
17=Cherokee 2 Dr.(1981-83)
73=Cherokee 2WD-2 Dr.(1984-86)
74=Cherokee 2WD-4 Dr.(1984-86)
18=Cherokee 4 Dr.(1981-83)
77=Cherokee 4WD-2 Dr.(1984-86)
78=Cherokee 4WD-4 Dr.(1984-86)
85=CJ-5 (1981-83)
86=CJ-6(1981)
87=CJ-7(1981-86)
88=CJ-8, Scrambler(1981-86)
64=Comanche 2WD-6 Ft. Box(1986)
66=Comanche 2WD-7 Ft. Box(1986)
63=Comanche 4WD-6 Ft. Box(1986)
65=Comanche 4WD-7 Ft. Box(1986)
15=Grand Wagoneer 4 Dr.(1984-86)
25=J-10 Truck 7 Ft. Box(1981-84)
26=J10 Truck 8 Ft. Box(1981-86)
27=J-20 Truck 8 Ft. Box(1981-86)
15=Wagoneer 4 Dr.(1981-83)
75=Wagoneer 4WD-4 Dr.(1984-86)

BODY
CJ=CJ-5, CJ-6, CJ-7, CJ-8, Scrambler(1981-86)
MJ=Comanche Pickup(1986)

STYLES
SJ=Wagoneer(1981-83), Grand Wagoneer(1984-86), Cherokee(1981-83), J-10, J-20(1981-86)
XJ=Wagoneer(1984-86), Cherokee(1984-86)

AR = Use as Required - = Non Illustrated Part P.A.R. = Paint as Required

« RETURN TO GROUP INDEX »

CARBURETOR AND COMPONENT PARTS SIX CYLINDER, V-6, CALIFORNIA XJ CHEROKEE, XJ WAGONEER, COMANCHE
Figure 14-4600

81J14 4600

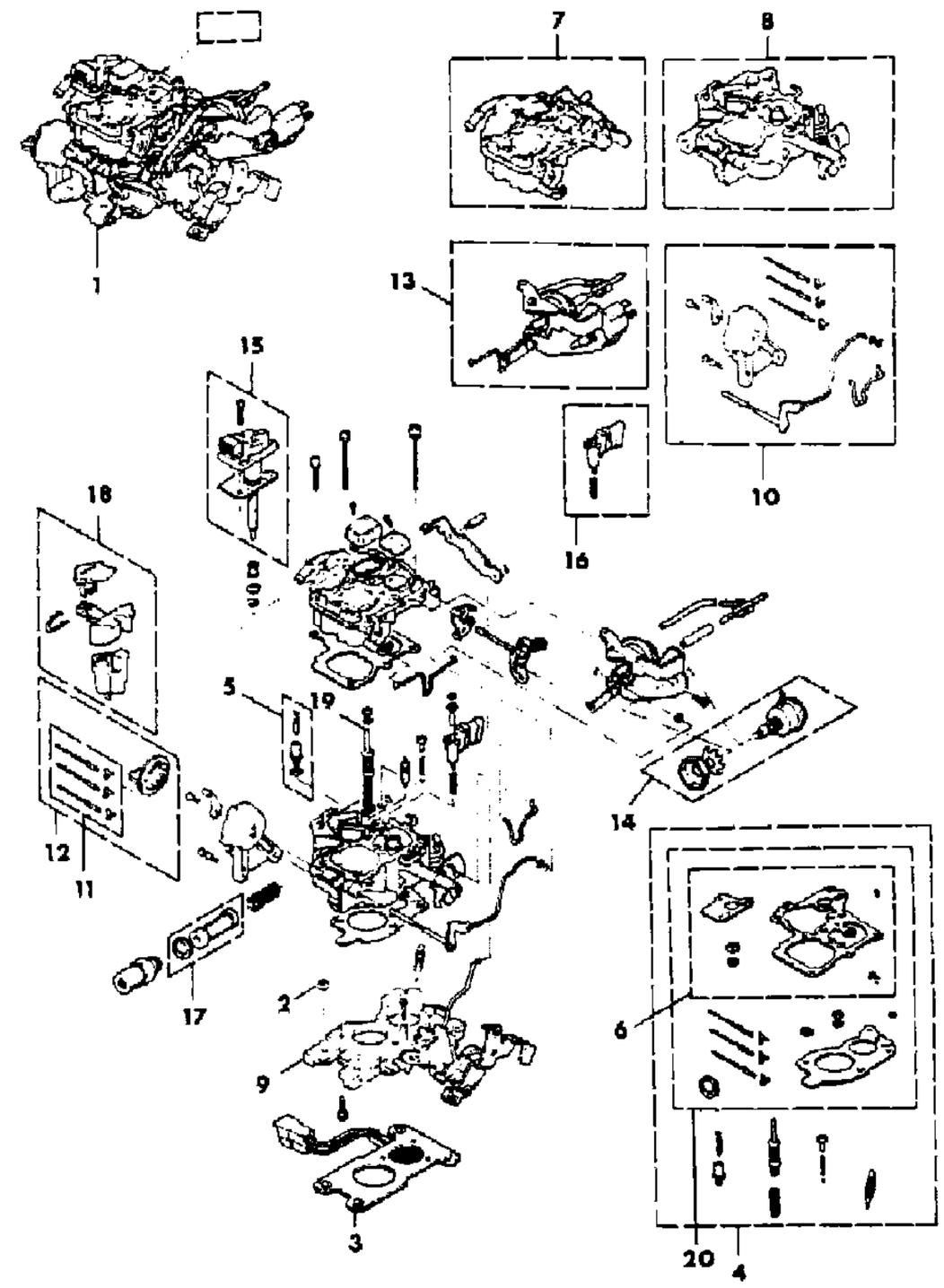

ITEM	PART NUMBER	QTY	BODY	MODEL	DESCRIPTION
18	8350 1068	1			FLOAT PACKAGE, Carburetor ***
19					PUMP ASSEMBLY, Accelerator ***
	8350 1024	1			1984-85
	8350 2888	1			1986: With Manual Transmission
	8350 1024	1			1986: With Automatic Transmission
20					GASKET PACKAGE, Carburetor
	8350 2884	1			1986: With Manual Transmission
	8350 0925	1			1986: With Automatic Transmission

MODEL CODES

16=Cherokee 2 Dr.(1981-83)
17=Cherokee 2 Dr.(1981-83)
73=Cherokee 2WD-2 Dr.(1984-86)
74=Cherokee 2WD-4 Dr.(1984-86)
18=Cherokee 4 Dr.(1981-83)
77=Cherokee 4WD-2 Dr.(1984-86)
78=Cherokee 4WD-4 Dr.(1984-86)
85=CJ-5 (1981-83)
86=CJ-6(1981)
87=CJ-7(1981-86)
88=CJ-8, Scrambler(1981-86)
64=Comanche 2WD-6 Ft. Box(1986)
66=Comanche 2WD-7 Ft. Box(1986)
63=Comanche 4WD-6 Ft. Box(1986)
65=Comanche 4WD-7 Ft. Box(1986)
15=Grand Wagoneer 4 Dr.(1984-86)
25=J-10 Truck 7 Ft. Box(1981-84)
26=J10 Truck 8 Ft. Box(1981-86)
27=J-20 Truck 8 Ft. Box(1981-86)
15=Wagoneer 4 Dr.(1981-83)
75=Wagoneer 4WD-4 Dr.(1984-86)

BODY
CJ=CJ-5, CJ-6, CJ-7, CJ-8, Scrambler(1981-86)
MJ=Comanche Pickup(1986)

STYLES
SJ=Wagoneer(1981-83), Grand Wagoneer(1984-86), Cherokee(1981-83), J-10, J-20(1981-86)
XJ=Wagoneer(1984-86), Cherokee(1984-86)

AR = Use as Required - = Non Illustrated Part P.A.R. = Paint as Required

« RETURN TO GROUP INDEX

FUEL INJECTION SYSTEM 1985-86 RENAULT DIESEL XJ CHEROKEE, XJ WAGONEER, COMANCHE
Figure 14-4700

B1J14 4700

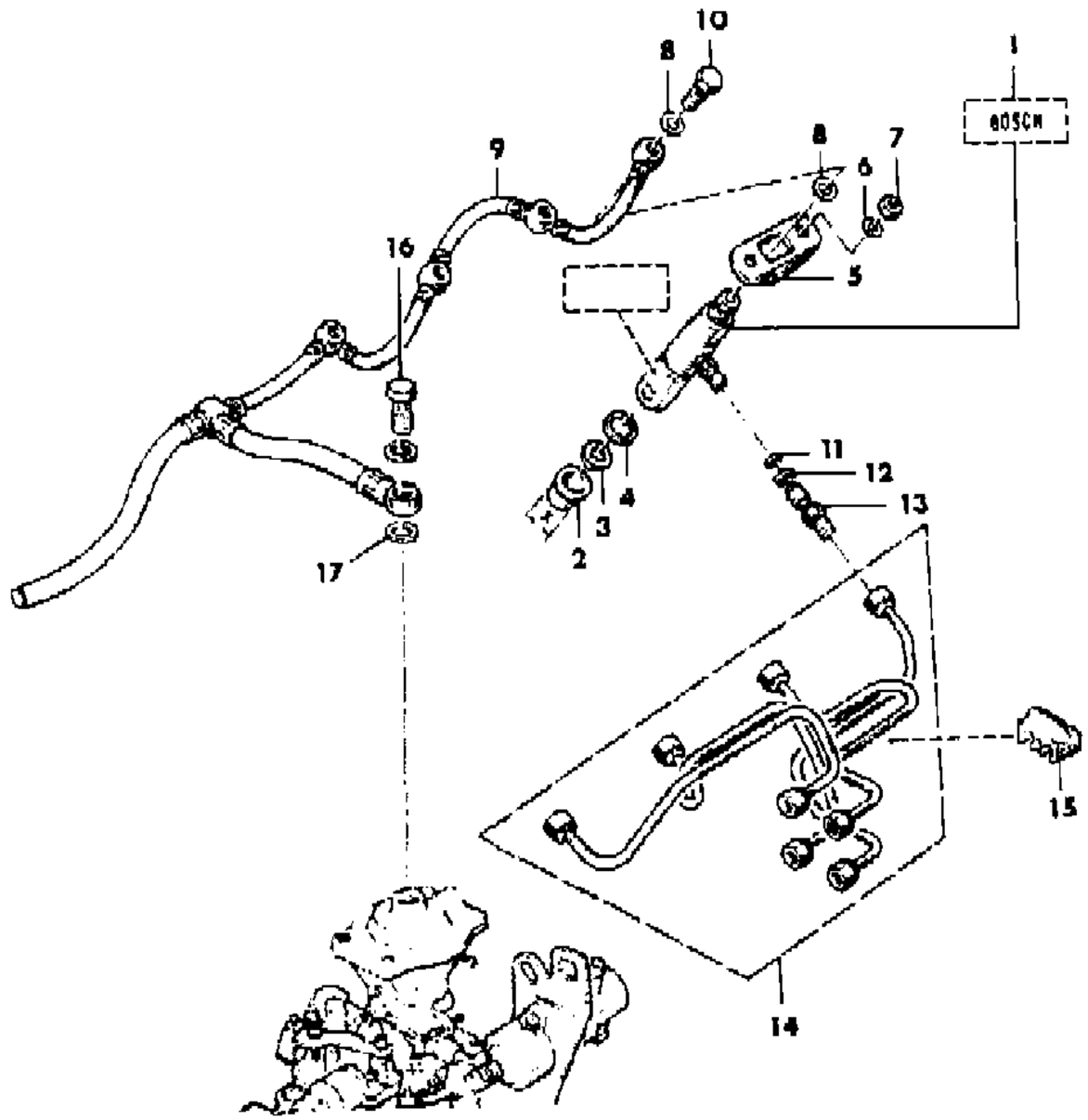

ITEM	PART NUMBER	QTY	BODY	MODEL	DESCRIPTION
1					NOZZLE, Injector
	JR77 5059	4			Remanufactured
	T067 9943	4			EXPORT
2					SHIELD, Heat
	T069 0543	4			X=17.5mm
	T069 0544	4			X=17.7mm
3	T066 3363	4			GASKET
4	T069 0542	4			O-RING
5	T067 9944	4			RETAINER, Injector
6	1150 0255	8			WASHER
7	T303 2018	8			NUT
8	T024 2149	8			SEAL
9	T069 5743	1			TUBE ASSY, Fuel Return ***
10	T480 5800	4			UNION, Fuel Return ***
11	T102 4658	4			WASHER
12	J301 5194	4			SEAL
13	T102 4659	4			CONNECTOR
14	T069 6528	1			TUBE ASSY, Injector ***
15	T102 7035	AR			SEPARATOR
16	T102 4765	1			UNION, Fuel Return ***
17	T066 7525	2			SEAL

MODEL CODES

16=Cherokee 2 Dr.(1981-83)
17=Cherokee 2 Dr.(1981-83)
73=Cherokee 2WD-2 Dr.(1984-86)
74=Cherokee 2WD-4 Dr.(1984-86)
18=Cherokee 4 Dr.(1981-83)
77=Cherokee 4WD-2 Dr.(1984-86)
78=Cherokee 4WD-4 Dr.(1984-86)
85=CJ-5 (1981-83)
86=CJ-6(1981)
87=CJ-7(1981-86)
88=CJ-8, Scrambler(1981-86)
64=Comanche 2WD-6 Ft. Box(1986)
66=Comanche 2WD-7 Ft. Box(1986)
63=Comanche 4WD-6 Ft. Box(1986)
65=Comanche 4WD-7 Ft. Box(1986)
15=Grand Wagoneer 4 Dr.(1984-86)
25=J-10 Truck 7 Ft. Box(1981-84)
26=J10 Truck 8 Ft. Box(1981-86)
27=J-20 Truck 8 Ft. Box(1981-86)
15=Wagoneer 4 Dr.(1981-83)
75=Wagoneer 4WD-4 Dr.(1984-86)

BODY
CJ=CJ-5, CJ-6, CJ-7, CJ-8, Scrambler(1981-86)
MJ=Comanche Pickup(1986)

STYLES
SJ=Wagoneer(1981-83), Grand Wagoneer(1984-86), Cherokee(1981-83), J-10, J-20(1981-86)
XJ=Wagoneer(1984-86), Cherokee(1984-86)

AR = Use as Required - = Non Illustrated Part P.A.R. = Paint as Required

« RETURN TO GROUP INDEX

THROTTLE BODY 1986 FOUR CYLINDER GAS, INJECTED XJ CHEROKEE, XJ WAGONEER, COMANCHE
Figure 14-4800

81J14 4800

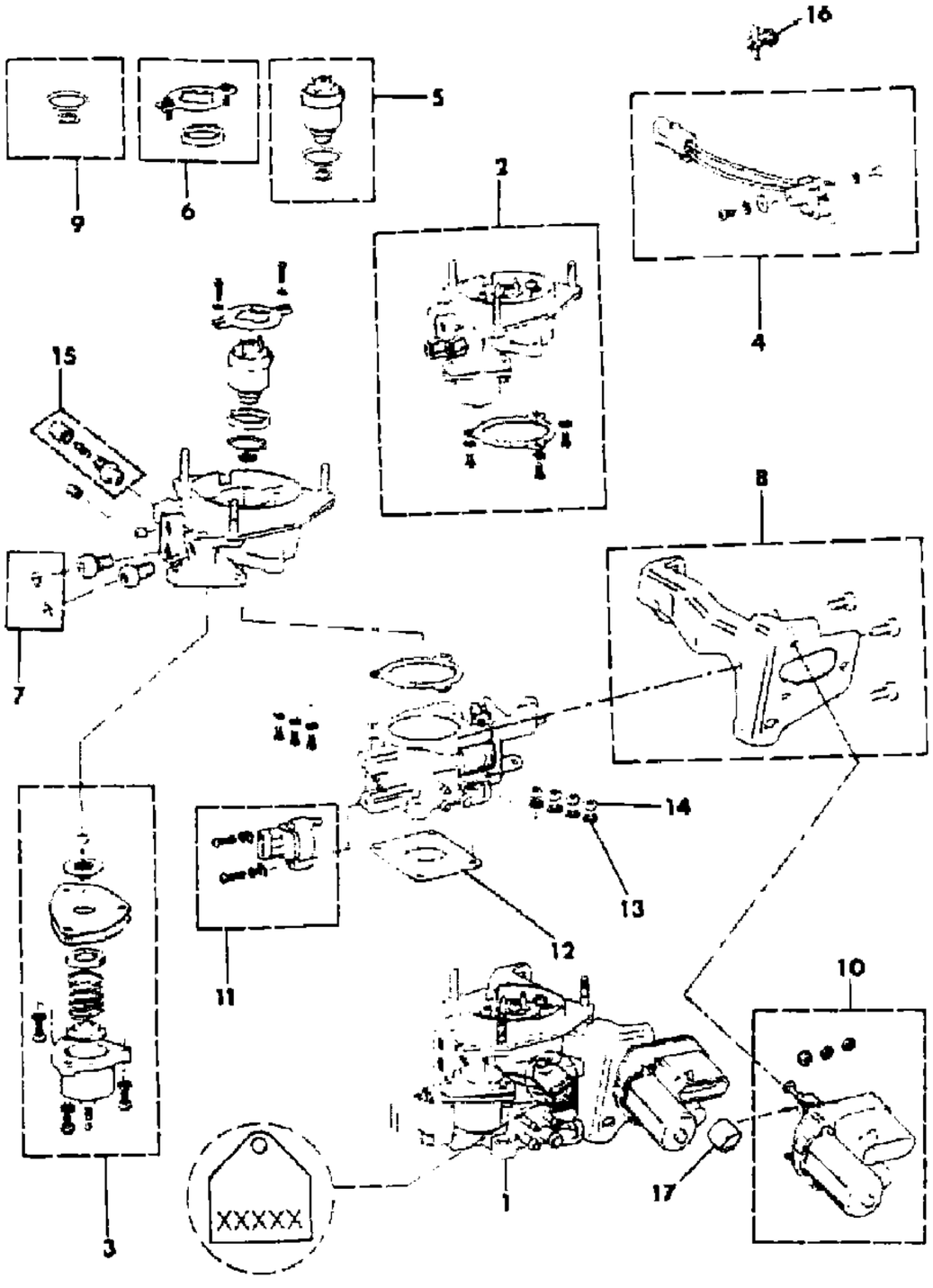

ITEM	PART NUMBER	QTY	BODY	MODEL	DESCRIPTION
1					BODY, Throttle
					Manual Transmission
	5300 2153	1			Tagged 8300
	5300 4291	1			Tagged 8668
					Automatic Transmission
	5300 2152	1			Tagged 8306
	5300 5221	1			Tagged 8667
2	8350 2747	1			BODY, Fuel
3	8350 1829	1			REGULATOR PACKAGE, Pressure
4	8350 2749	1			SWITCH, Wide Open Throttle
5	8350 2748	1			INJECTOR, Fuel
6	8350 0064	1			MOUNTING PACKAGE, Fuel Injector ***
7	8350 0065	1			GASKET SET, Flare ***
8	8350 2750	1			BRACKET PACKAGE ***
9	8350 0067	1			O-RING PACKAGE
10	8350 2375	1			ACTUATOR PACKAGE, Idle Speed ***
11	3300 0169	1			SENSOR PACKAGE, Throttle Position
12	5300 2154	1			GASKET
13	J012 0393	4			WASHER
14	J941 6531	4			NUT
15	8350 1572	1			CONNECTOR, Diagnostic
16	8350 2170	1			CLIP
17	8350 2374	1			BOOT, Actuator ***

MODEL CODES

16=Cherokee 2 Dr.(1981-83)
17=Cherokee 2 Dr.(1981-83)
73=Cherokee 2WD-2 Dr.(1984-86)
74=Cherokee 2WD-4 Dr.(1984-86)
18=Cherokee 4 Dr.(1981-83)
77=Cherokee 4WD-2 Dr.(1984-86)
78=Cherokee 4WD-4 Dr.(1984-86)
85=CJ-5 (1981-83)
86=CJ-6(1981)
87=CJ-7(1981-86)
88=CJ-8, Scrambler(1981-86)
64=Comanche 2WD-6 Ft. Box(1986)
66=Comanche 2WD-7 Ft. Box(1986)
63=Comanche 4WD-6 Ft. Box(1986)
65=Comanche 4WD-7 Ft. Box(1986)
15=Grand Wagoneer 4 Dr.(1984-86)
25=J-10 Truck 7 Ft. Box(1981-84)
26=J10 Truck 8 Ft. Box(1981-86)
27=J-20 Truck 8 Ft. Box(1981-86)
15=Wagoneer 4 Dr.(1981-83)
75=Wagoneer 4WD-4 Dr.(1984-86)

BODY
CJ=CJ-5, CJ-6, CJ-7, CJ-8, Scrambler(1981-86)
MJ=Comanche Pickup(1986)

STYLES
SJ=Wagoneer(1981-83), Grand Wagoneer(1984-86), Cherokee(1981-83), J-10, J-20(1981-86)
XJ=Wagoneer(1984-86), Cherokee(1984-86)

AR = Use as Required - = Non Illustrated Part P.A.R. = Paint as Required

« RETURN TO GROUP INDEX

TURBOCHARGER 1985-86 RENAULT DIESEL XJ CHEROKEE, XJ WAGONEER, COMANCHE
Figure 14-4900

81J14 4900

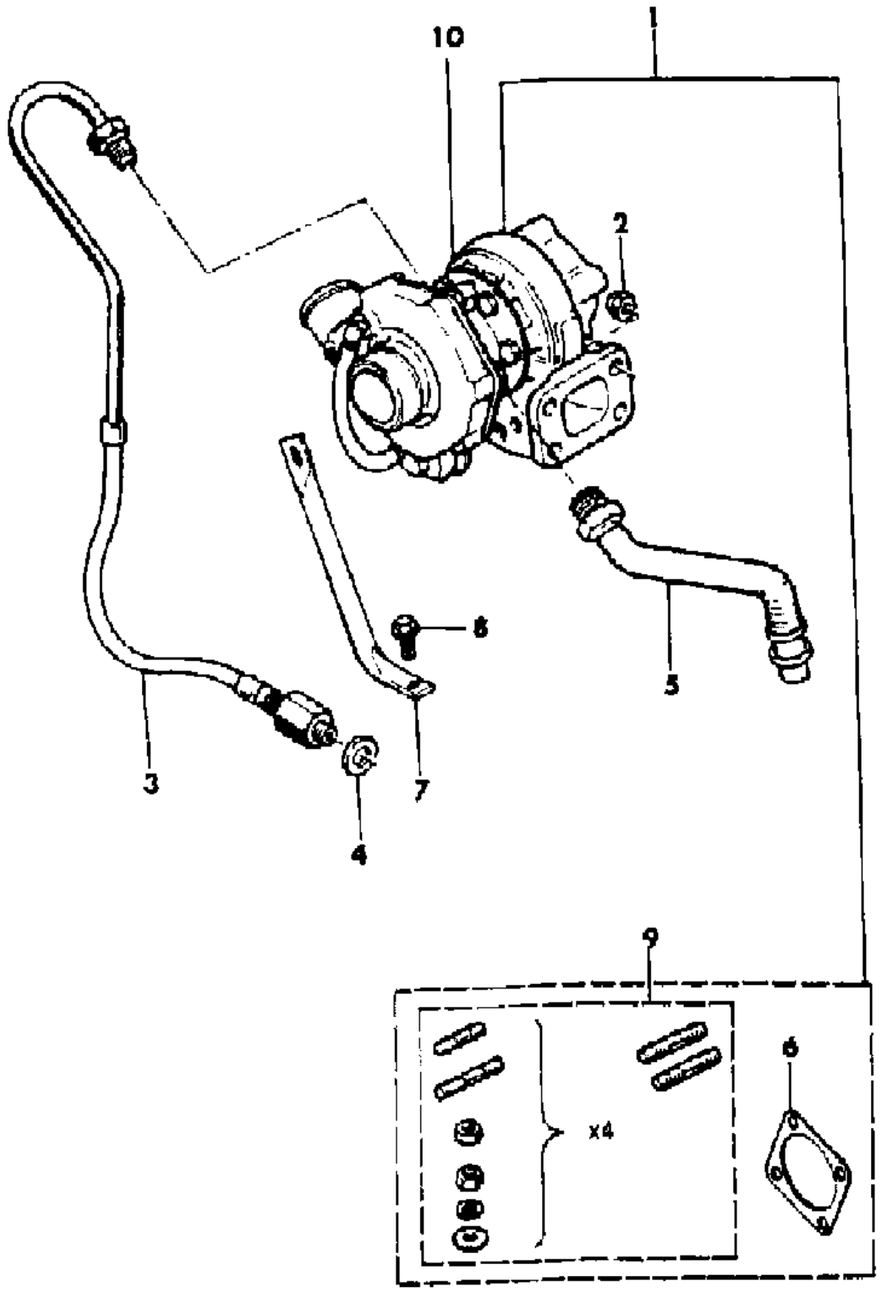

ITEM	PART NUMBER	QTY	BODY	MODEL	DESCRIPTION
1	T146 3600	1			TURBOCHARGER ASSY, EXPORT ***
2	T303 4081	4			NUT
3	T072 7702	1			TUBE, Oil Supply
4	J306 2014	1			GASKET
5	5300 3935	1			HOSE, Oil Return
6	T069 5216	1			GASKET
7	3300 2467	1			BRACKET, Support
8	3420 1818	1			SCREW
9	T146 2991	1			HARDWARE PACKAGE
10	JR77 5043	1			TURBOCHARGER ASSY, Remanufactured ***

MODEL CODES

16=Cherokee 2 Dr.(1981-83)
17=Cherokee 2 Dr.(1981-83)
73=Cherokee 2WD-2 Dr.(1984-86)
74=Cherokee 2WD-4 Dr.(1984-86)
18=Cherokee 4 Dr.(1981-83)
77=Cherokee 4WD-2 Dr.(1984-86)
78=Cherokee 4WD-4 Dr.(1984-86)
85=CJ-5 (1981-83)
86=CJ-6(1981)
87=CJ-7(1981-86)
88=CJ-8, Scrambler(1981-86)
64=Comanche 2WD-6 Ft. Box(1986)
66=Comanche 2WD-7 Ft. Box(1986)
63=Comanche 4WD-6 Ft. Box(1986)
65=Comanche 4WD-7 Ft. Box(1986)
15=Grand Wagoneer 4 Dr.(1984-86)
25=J-10 Truck 7 Ft. Box(1981-84)
26=J10 Truck 8 Ft. Box(1981-86)
27=J-20 Truck 8 Ft. Box(1981-86)
15=Wagoneer 4 Dr.(1981-83)
75=Wagoneer 4WD-4 Dr.(1984-86)

BODY
CJ=CJ-5, CJ-6, CJ-7, CJ-8, Scrambler(1981-86)
MJ=Comanche Pickup(1986)

STYLES
SJ=Wagoneer(1981-83), Grand Wagoneer(1984-86), Cherokee(1981-83), J-10, J-20(1981-86)
XJ=Wagoneer(1984-86), Cherokee(1984-86)

AR = Use as Required - = Non Illustrated Part P.A.R. = Paint as Required

« RETURN TO GROUP INDEX

ACCELERATOR PEDAL AND LINKAGE XJ CHEROKEE, XJ WAGONEER, COMANCHE
Figure 14-5000

81J14 5000

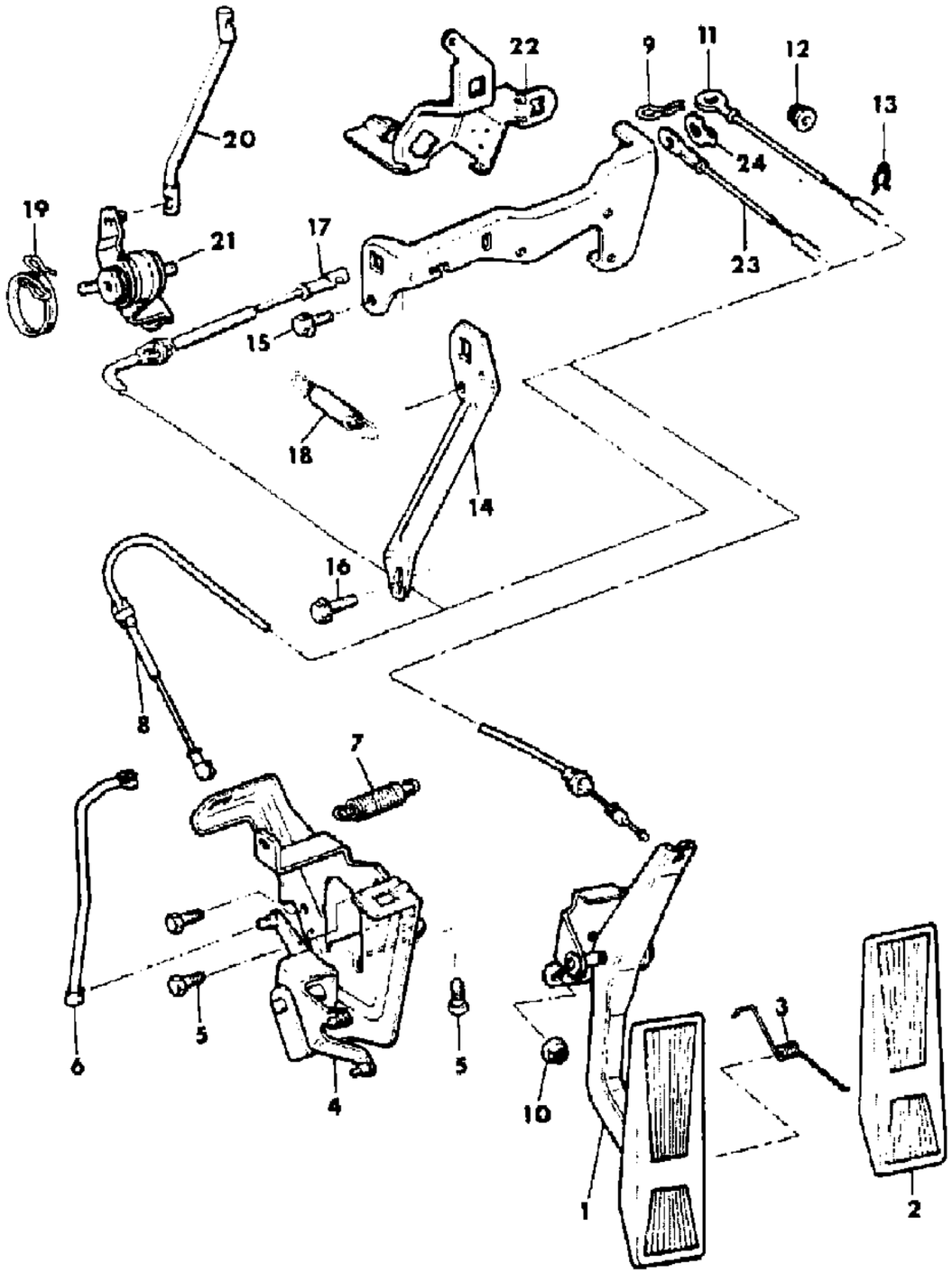

ITEM	PART NUMBER	QTY	BODY	MODEL	DESCRIPTION
1					PEDAL, Accelerator
	5300 1563	1			1984-85
	5300 4095	1			1986
	5300 2324	1			1985: Diesel, With Automatic Transmission, With Factory Installed Air Conditioning
2	5300 3932	1			PAD, Pedal
3	J319 3369	1			SPRING
4					BELLCRANK ASSY ***
	3300 1065	1			Four Cylinder, Carbureted
5					SCREW
	S017 9814	3			Four Cylinder, Carbureted
6					LINK, Carbureted
	3300 1068	1			Four Cylinder, Carbureted
7					SPRING, Return
	3300 1069	1			Four Cylinder, Carbureted
	5300 1615	1			Six Cylinder
8					CABLE, Accelerator
	5300 1572	1			Four Cylinder, Carbureted
9					PIN
	J400 5122	1			Diesel
10	3420 1246	2			NUT
11					CABLE, Accelerator
	5300 1795	1			Diesel
12					GROMMET
	5300 1952	1			Diesel
13					CLIP
	J306 6295	1			Diesel
14					BRACE
	5300 2749	1			Four Cylinder, Injected
15					BOLT
	3420 1807	1			Four Cylinder, Injected
16					BOLT
	J400 6036	1			Four Cylinder, Injected
17					CABLE, Accelerator
	5300 2422	1			Four Cylinder Injected
18					SPRING, Return
	5300 4096	1			Four Cylinder, Injected
19					SPRING, Bellcrank
	5300 3366	1			Four Cylinder, Injected

MODEL CODES

16=Cherokee 2 Dr.(1981-83)
17=Cherokee 2 Dr.(1981-83)
73=Cherokee 2WD-2 Dr.(1984-86)
74=Cherokee 2WD-4 Dr.(1984-86)
18=Cherokee 4 Dr.(1981-83)
77=Cherokee 4WD-2 Dr.(1984-86)
78=Cherokee 4WD-4 Dr.(1984-86)
85=CJ-5 (1981-83)
86=CJ-6(1981)
87=CJ-7(1981-86)
88=CJ-8, Scrambler(1981-86)
64=Comanche 2WD-6 Ft. Box(1986)
66=Comanche 2WD-7 Ft. Box(1986)
63=Comanche 4WD-6 Ft. Box(1986)
65=Comanche 4WD-7 Ft. Box(1986)
15=Grand Wagoneer 4 Dr.(1984-86)
25=J-10 Truck 7 Ft. Box(1981-84)
26=J10 Truck 8 Ft. Box(1981-86)
27=J-20 Truck 8 Ft. Box(1981-86)
15=Wagoneer 4 Dr.(1981-83)
75=Wagoneer 4WD-4 Dr.(1984-86)

BODY
CJ=CJ-5, CJ-6, CJ-7, CJ-8, Scrambler(1981-86)
MJ=Comanche Pickup(1986)

STYLES
SJ=Wagoneer(1981-83), Grand Wagoneer(1984-86), Cherokee(1981-83), J-10, J-20(1981-86)
XJ=Wagoneer(1984-86), Cherokee(1984-86)

AR = Use as Required - = Non Illustrated Part P.A.R. = Paint as Required

« RETURN TO GROUP INDEX »

ACCELERATOR PEDAL AND LINKAGE XJ CHEROKEE, XJ WAGONEER, COMANCHE
Figure 14-5000

81J14 5000

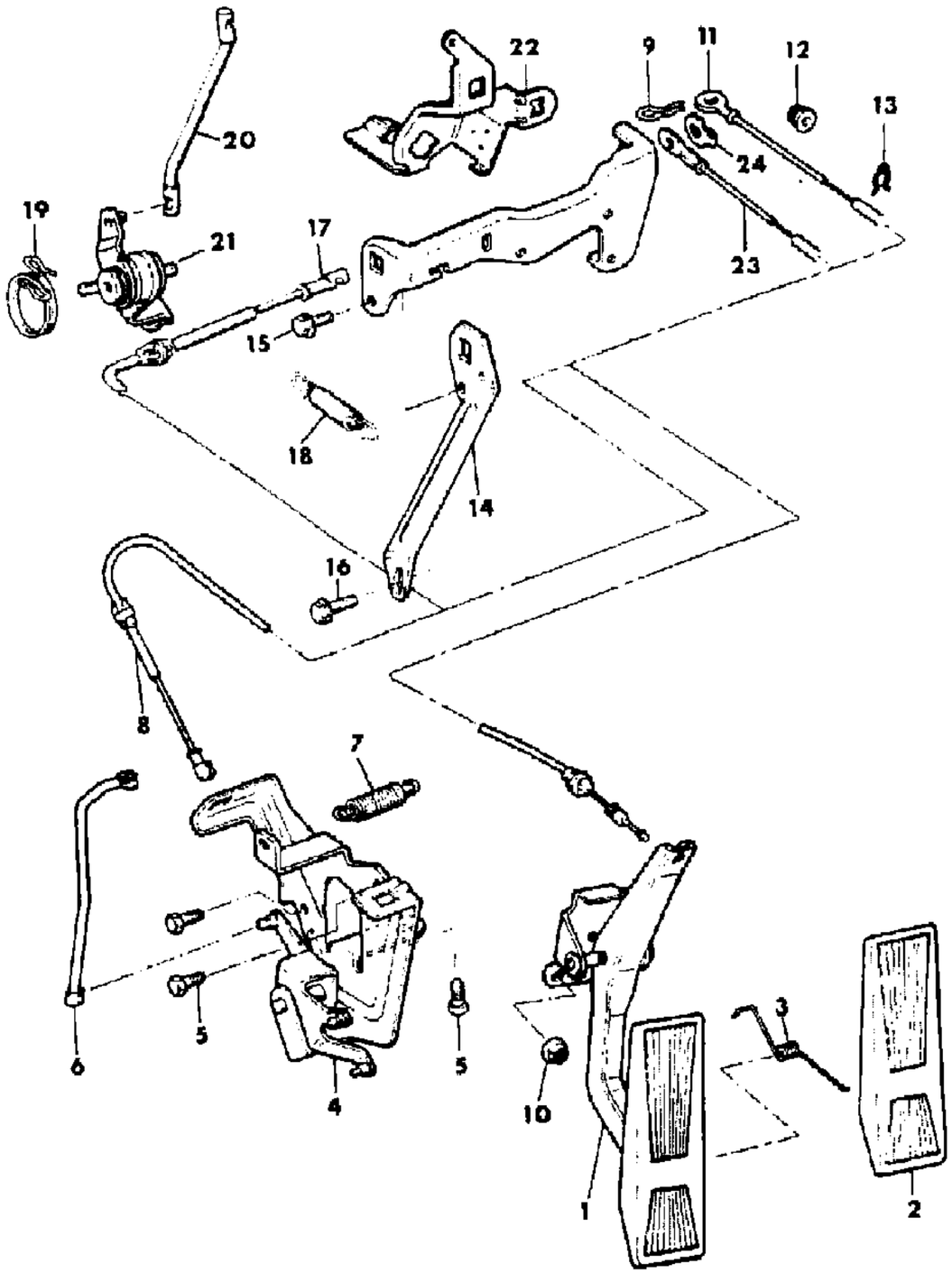

ITEM	PART NUMBER	QTY	BODY	MODEL	DESCRIPTION
20					LINK
	5300 2833	1			Four Cylinder, Injected
21					BELLCRANK ASSY ***
	8350 3632	1			Four Cylinder, Injected
22					BRACKET, Cable
	8350 0869	1			Six Cylinder
23					CABLE, Accelerator
	5300 0038	1			Six Cylinder
24					CLIP
	J400 6578	1			Six Cylinder

MODEL CODES

16=Cherokee 2 Dr.(1981-83)
17=Cherokee 2 Dr.(1981-83)
73=Cherokee 2WD-2 Dr.(1984-86)
74=Cherokee 2WD-4 Dr.(1984-86)
18=Cherokee 4 Dr.(1981-83)
77=Cherokee 4WD-2 Dr.(1984-86)
78=Cherokee 4WD-4 Dr.(1984-86)
85=CJ-5 (1981-83)
86=CJ-6(1981)
87=CJ-7(1981-86)
88=CJ-8, Scrambler(1981-86)
64=Comanche 2WD-6 Ft. Box(1986)
66=Comanche 2WD-7 Ft. Box(1986)
63=Comanche 4WD-6 Ft. Box(1986)
65=Comanche 4WD-7 Ft. Box(1986)
15=Grand Wagoneer 4 Dr.(1984-86)
25=J-10 Truck 7 Ft. Box(1981-84)
26=J10 Truck 8 Ft. Box(1981-86)
27=J-20 Truck 8 Ft. Box(1981-86)
15=Wagoneer 4 Dr.(1981-83)
75=Wagoneer 4WD-4 Dr.(1984-86)

BODY
CJ=CJ-5, CJ-6, CJ-7, CJ-8, Scrambler(1981-86)
MJ=Comanche Pickup(1986)

STYLES
SJ=Wagoneer(1981-83), Grand Wagoneer(1984-86), Cherokee(1981-83), J-10, J-20(1981-86)
XJ=Wagoneer(1984-86), Cherokee(1984-86)

AR = Use as Required - = Non Illustrated Part P.A.R. = Paint as Required

« RETURN TO GROUP INDEX

LINKAGE, AUTOMATIC TRANSMISSION THROTTLE VALVE 1984-86 XJ CHEROKEE, XJ WAGONEER, COMANCHE
Figure 14-5100

81J14 5100 A

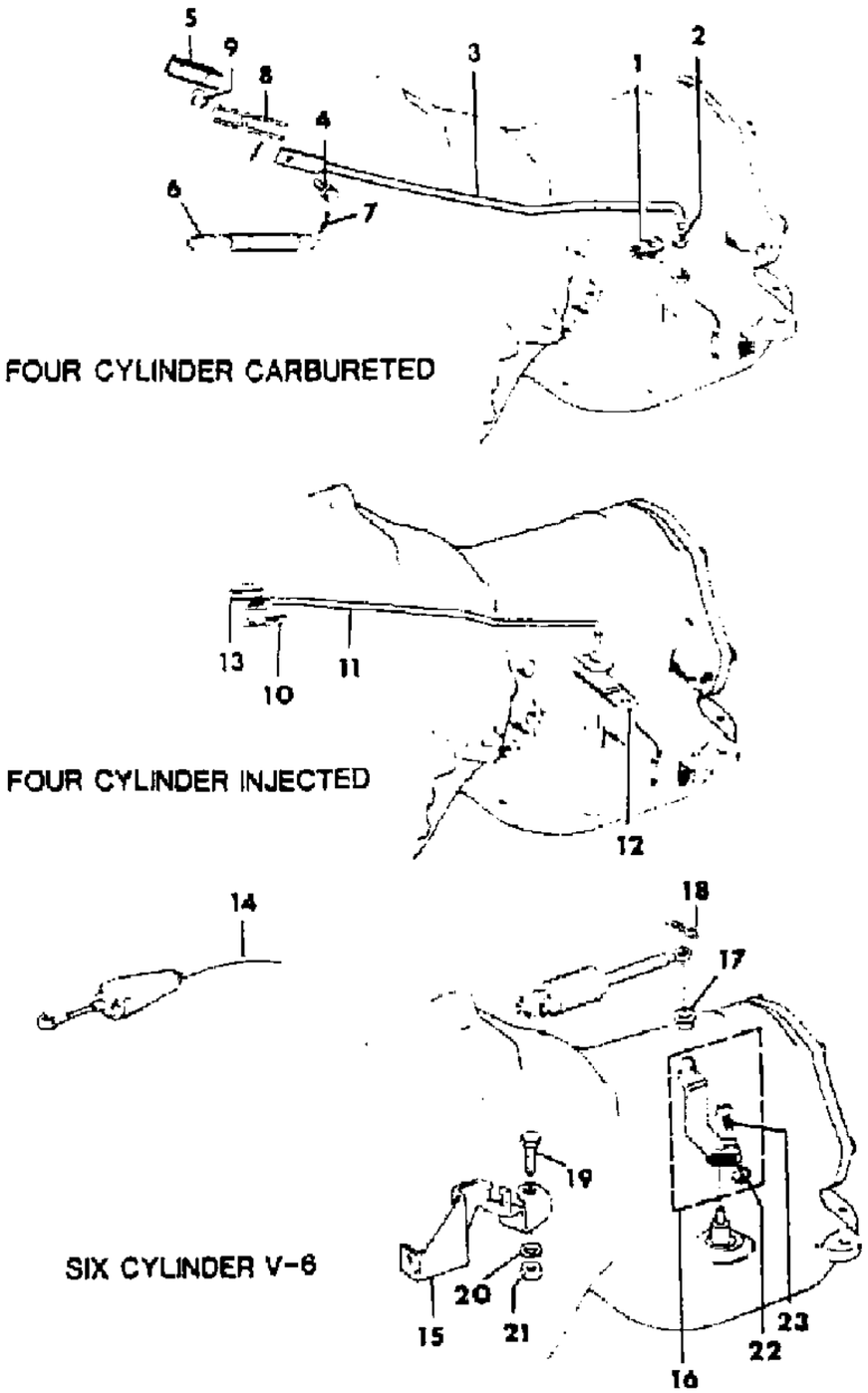

ITEM	PART NUMBER	QTY	BODY	MODEL	DESCRIPTION
1	J324 0291	1			LEVER, Throttle
2	J322 0125	1			BUSHING
3	5300 1220	1			ROD, Throttle
4	J400 4507	1			BOLT
5	J324 0123	1			CLAMP
6	J319 6286	1			SPRING
7	J400 5122	2			PIN, Locking
8	J322 2405	1			LINK
9	J322 3656	1			SPACER
10	5300 3476	1			LINK
11	8350 3162	1			ROD, Throttle
12	5300 2848	1			LEVER, Throttle
13	J321 7200	1			CLAMP
14					CABLE, Throttle Control
	5300 1372	1			Six Cylinder
	5300 1796	1			Diesel
15					BRACKET
	5300 1373	1			Six Cylinder ***
	5300 1829	1			Diesel
16					LEVER
	5300 1669	12			Six Cylinder
	3300 2657	1			Diesel
17	J323 0232	1			BUSHING
18	J400 5758	1			PIN, Locking
19					BOLT
	J018 0146	1			Six Cylinder
	1150 3780	2			Diesel
20	J012 0383	1			WASHER
21	J027 1501	1			NUT
22	J011 4381	1			NUT
23					SCREW
	J400 6393	1			1984-85
	J400 7460	1			1986

MODEL CODES
16=Cherokee 2 Dr.(1981-83)
17=Cherokee 2 Dr.(1981-83)
73=Cherokee 2WD-2 Dr.(1984-86)
74=Cherokee 2WD-4 Dr.(1984-86)
18=Cherokee 4 Dr.(1981-83)
77=Cherokee 4WD-2 Dr.(1984-86)
78=Cherokee 4WD-4 Dr.(1984-86)
85=CJ-5 (1981-83)
86=CJ-6(1981)
87=CJ-7(1981-86)
88=CJ-8, Scrambler(1981-86)
64=Comanche 2WD-6 Ft. Box(1986)
66=Comanche 2WD-7 Ft. Box(1986)
63=Comanche 4WD-6 Ft. Box(1986)
65=Comanche 4WD-7 Ft. Box(1986)
15=Grand Wagoneer 4 Dr.(1984-86)
25=J-10 Truck 7 Ft. Box(1981-84)
26=J10 Truck 8 Ft. Box(1981-86)
27=J-20 Truck 8 Ft. Box(1981-86)
15=Wagoneer 4 Dr.(1981-83)
75=Wagoneer 4WD-4 Dr.(1984-86)

BODY
CJ=CJ-5, CJ-6, CJ-7, CJ-8, Scrambler(1981-86)
MJ=Comanche Pickup(1986)

STYLES
SJ=Wagoneer(1981-83), Grand Wagoneer(1984-86), Cherokee(1981-83), J-10, J-20(1981-86)
XJ=Wagoneer(1984-86), Cherokee(1984-86)

AR = Use as Required - = Non Illustrated Part P.A.R. = Paint as Required

« RETURN TO GROUP INDEX

SPEED CONTROL, ENGINE COMPARTMENT COMPONENTS 1985-86 RENAULT DIESEL XJ CHEROKEE, XJ WAGONEER, COMANCHE
Figure 14-5200

81J14 5200

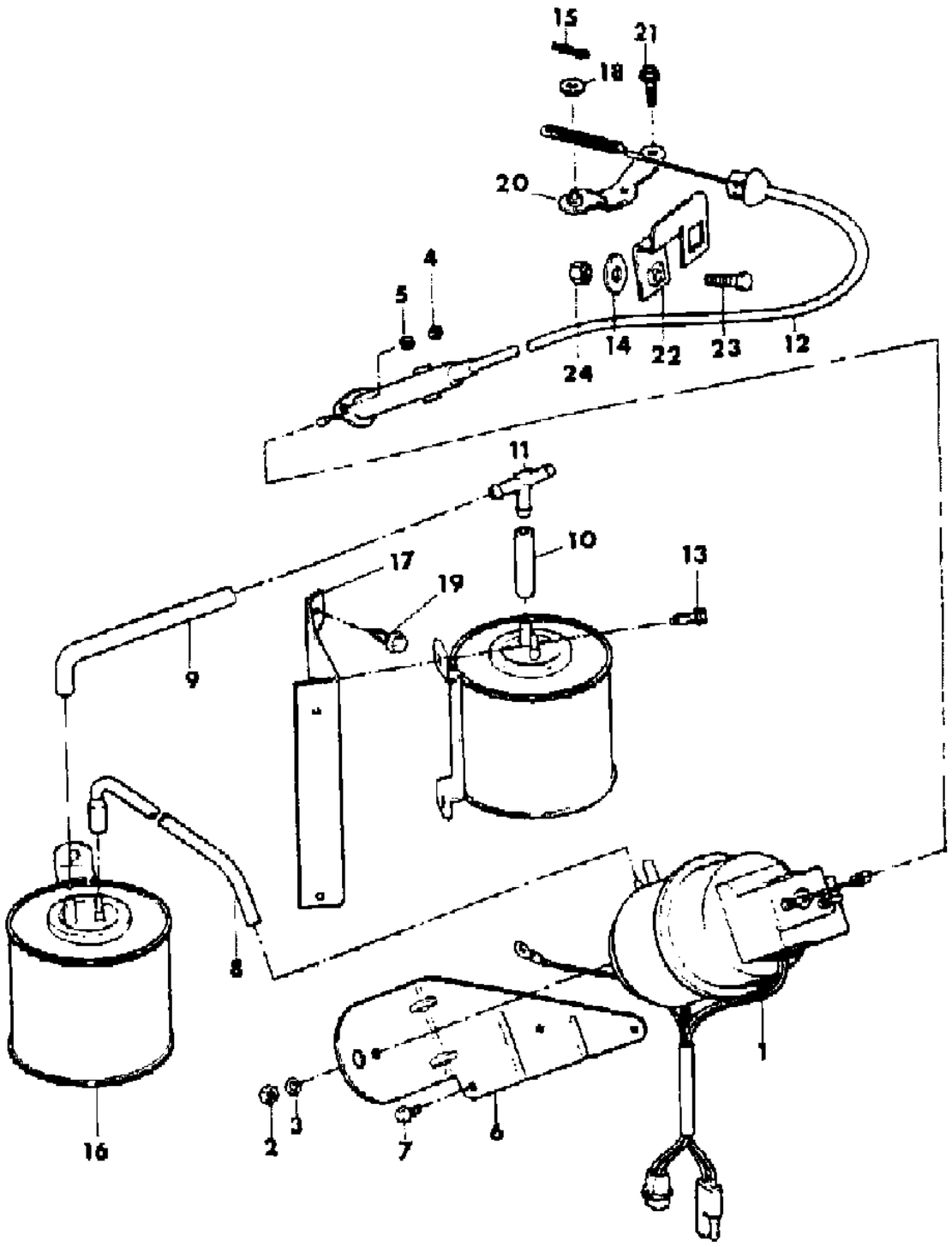

ITEM	PART NUMBER	QTY	BODY	MODEL	DESCRIPTION
1	J324 0500	1			SERVO, Cruise Control
2	J012 0375	1			NUT
3	J012 0380	1			WASHER
4	S013 4530	2			NUT
5	S013 1044	2			WASHER
6	5300 1733	1			BRACKET
7	3420 1418	3			SCREW
8	5300 2949	1			HOSE
9	5300 1501	1			HOSE
10	5300 0657	1			HOSE
11	3300 0586	1			TEE
12	5300 1734	1			CABLE
13	1150 2453	2			SCREW
14	1150 0306	1			WASHER
15	J400 5758	1			PIN
16	J323 2991	1			RESERVOIR, Vacuum
17	5500 3276	1			BRACKET
18	J400 1078	1			WASHER
19	3420 1691	1			SCREW
20	3300 2658	1			LEVER
21	3420 1807	2			BOLT
22	3300 2659	1			BRACKET
23	1150 4331	1			BOLT
24	3420 1658	1			NUT

MODEL CODES

16=Cherokee 2 Dr.(1981-83)
17=Cherokee 2 Dr.(1981-83)
73=Cherokee 2WD-2 Dr.(1984-86)
74=Cherokee 2WD-4 Dr.(1984-86)
18=Cherokee 4 Dr.(1981-83)
77=Cherokee 4WD-2 Dr.(1984-86)
78=Cherokee 4WD-4 Dr.(1984-86)
85=CJ-5 (1981-83)
86=CJ-6(1981)
87=CJ-7(1981-86)
88=CJ-8, Scrambler(1981-86)
64=Comanche 2WD-6 Ft. Box(1986)
66=Comanche 2WD-7 Ft. Box(1986)
63=Comanche 4WD-6 Ft. Box(1986)
65=Comanche 4WD-7 Ft. Box(1986)
15=Grand Wagoneer 4 Dr.(1984-86)
25=J-10 Truck 7 Ft. Box(1981-84)
26=J10 Truck 8 Ft. Box(1981-86)
27=J-20 Truck 8 Ft. Box(1981-86)
15=Wagoneer 4 Dr.(1981-83)
75=Wagoneer 4WD-4 Dr.(1984-86)

BODY
CJ=CJ-5, CJ-6, CJ-7, CJ-8, Scrambler(1981-86)
MJ=Comanche Pickup(1986)

STYLES
SJ=Wagoneer(1981-83), Grand Wagoneer(1984-86), Cherokee(1981-83), J-10, J-20(1981-86)
XJ=Wagoneer(1984-86), Cherokee(1984-86)

AR = Use as Required - = Non Illustrated Part P.A.R. = Paint as Required

« RETURN TO GROUP INDEX

SPEED CONTROL, ENGINE COMPARTMENT COMPONENTS FOUR AND SIX CYLINDER GAS, CARBURETED XJ CHEROKEE, XJ WAGONEER, COMANCHE
Figure 14-5300

81J14 5300

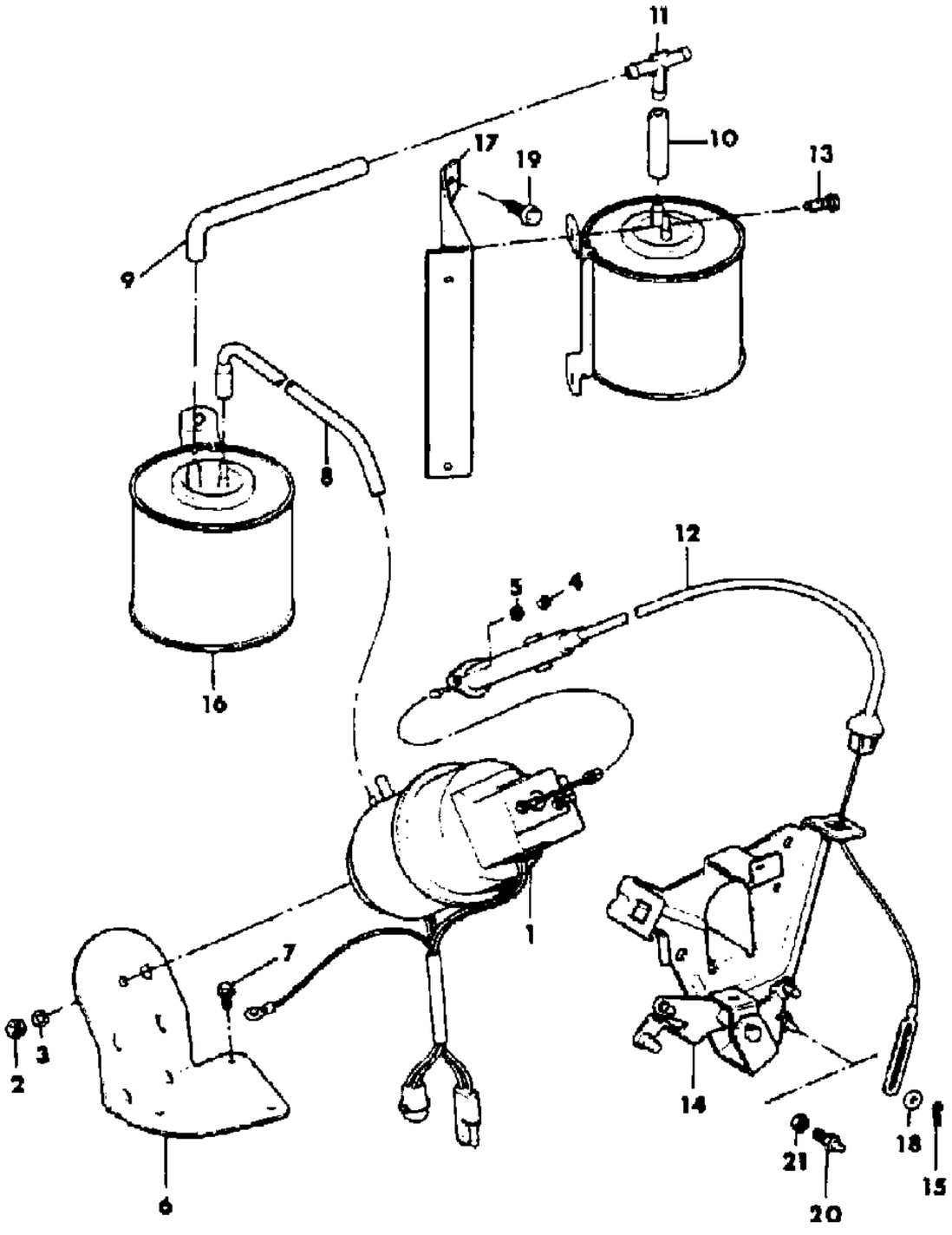

ITEM	PART NUMBER	QTY	BODY	MODEL	DESCRIPTION
1	J324 0500	1			SERVO, Cruise Control
2	J012 0375	1			NUT
3	J012 0380	1			WASHER
4	S013 4530	2			NUT
5	S013 1044	2			WASHER
6	5300 0313	1			BRACKET
7	3420 1418	3			SCREW
8					HOSE
	5300 0316	1			1984
	3200 2176	1			1985
	5300 0316	1			1986
9					HOSE
	5300 1501	1			Four Cylinder
	J812 5810	1			Six Cylinder
10	3300 0657	1			HOSE
11	3300 0586	1			TEE
12					CABLE
	5300 0028	1			Four Cylinder
	5300 0920	1			Six Cylinder
13	1150 2453	2			SCREW
14					BRACKET, Cable
	3300 1065	1			Four Cylinder
15	J400 5758	1			PIN
16	J323 2991	1			RESERVOIR, Vaccum
17	5500 3276	1			BRACKET
18	J400 1078	1			WASHER
19	3420 1691	1			SCREW
20					STUD
	5300 0922	1			Six Cylinder
21	1150 3739	1			NUT

MODEL CODES

16=Cherokee 2 Dr.(1981-83)
17=Cherokee 2 Dr.(1981-83)
73=Cherokee 2WD-2 Dr.(1984-86)
74=Cherokee 2WD-4 Dr.(1984-86)
18=Cherokee 4 Dr.(1981-83)
77=Cherokee 4WD-2 Dr.(1984-86)
78=Cherokee 4WD-4 Dr.(1984-86)
85=CJ-5 (1981-83)
86=CJ-6(1981)
87=CJ-7(1981-86)
88=CJ-8, Scrambler(1981-86)
64=Comanche 2WD-6 Ft. Box(1986)
66=Comanche 2WD-7 Ft. Box(1986)
63=Comanche 4WD-6 Ft. Box(1986)
65=Comanche 4WD-7 Ft. Box(1986)
15=Grand Wagoneer 4 Dr.(1984-86)
25=J-10 Truck 7 Ft. Box(1981-84)
26=J10 Truck 8 Ft. Box(1981-86)
27=J-20 Truck 8 Ft. Box(1981-86)
15=Wagoneer 4 Dr.(1981-83)
75=Wagoneer 4WD-4 Dr.(1984-86)

BODY
CJ=CJ-5, CJ-6, CJ-7, CJ-8, Scrambler(1981-86)
MJ=Comanche Pickup(1986)

STYLES
SJ=Wagoneer(1981-83), Grand Wagoneer(1984-86), Cherokee(1981-83), J-10, J-20(1981-86)
XJ=Wagoneer(1984-86), Cherokee(1984-86)

AR = Use as Required - = Non Illustrated Part P.A.R. = Paint as Required

« RETURN TO GROUP INDEX

SPEED CONTROL, ENGINE COMPARTMENT COMPONENTS FOUR CYLINDER GAS, INJECTED XJ CHEROKEE, XJ WAGONEER, COMANCHE
Figure 14-5400

81J14 5400

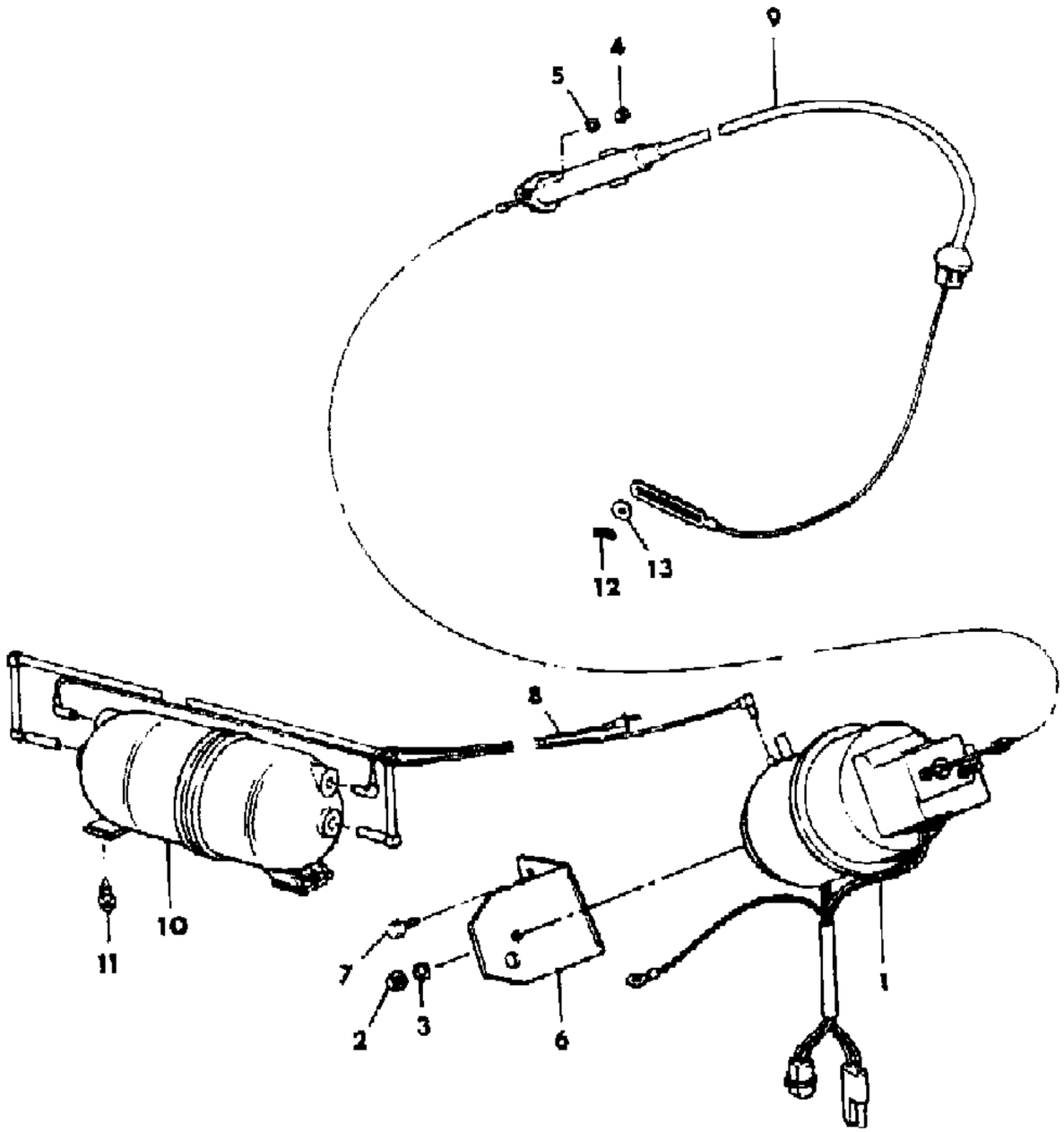

ITEM	PART NUMBER	QTY	BODY	MODEL	DESCRIPTION
1	J324 0500	1			SERVO, Cruise Control
2	J012 0375	1			NUT
3	J012 0380	1			WASHER
4	S013 4530	2			NUT
5	S013 1044	2			WASHER
6	5300 2424	1			BRACKET
7	3420 1418	3			SCREW
8	5300 3520	1			HARNESS, Vacuum
9	5300 2425	1			CABLE
10	5300 3052	1			RESERVOIR, Vacuum
11	1150 0994	2			SCREW
12	J400 5758	1			PIN
13	J400 1078	1			WASHER

MODEL CODES
16=Cherokee 2 Dr.(1981-83)
17=Cherokee 2 Dr.(1981-83)
73=Cherokee 2WD-2 Dr.(1984-86)
74=Cherokee 2WD-4 Dr.(1984-86)
18=Cherokee 4 Dr.(1981-83)
77=Cherokee 4WD-2 Dr.(1984-86)
78=Cherokee 4WD-4 Dr.(1984-86)
85=CJ-5 (1981-83)
86=CJ-6(1981)
87=CJ-7(1981-86)
88=CJ-8, Scrambler(1981-86)
64=Comanche 2WD-6 Ft. Box(1986)
66=Comanche 2WD-7 Ft. Box(1986)
63=Comanche 4WD-6 Ft. Box(1986)
65=Comanche 4WD-7 Ft. Box(1986)
15=Grand Wagoneer 4 Dr.(1984-86)
25=J-10 Truck 7 Ft. Box(1981-84)
26=J10 Truck 8 Ft. Box(1981-86)
27=J-20 Truck 8 Ft. Box(1981-86)
15=Wagoneer 4 Dr.(1981-83)
75=Wagoneer 4WD-4 Dr.(1984-86)

BODY
CJ=CJ-5, CJ-6, CJ-7, CJ-8, Scrambler(1981-86)
MJ=Comanche Pickup(1986)

STYLES
SJ=Wagoneer(1981-83), Grand Wagoneer(1984-86), Cherokee(1981-83), J-10, J-20(1981-86)
XJ=Wagoneer(1984-86), Cherokee(1984-86)

AR = Use as Required - = Non Illustrated Part P.A.R. = Paint as Required

« RETURN TO GROUP INDEX

SPEED CONTROL, INSTRUMENT PANEL COMPONENTS XJ CHEROKEE, XJ WAGONEER, COMANCHE
Figure 14-5500

81J14 5500 A

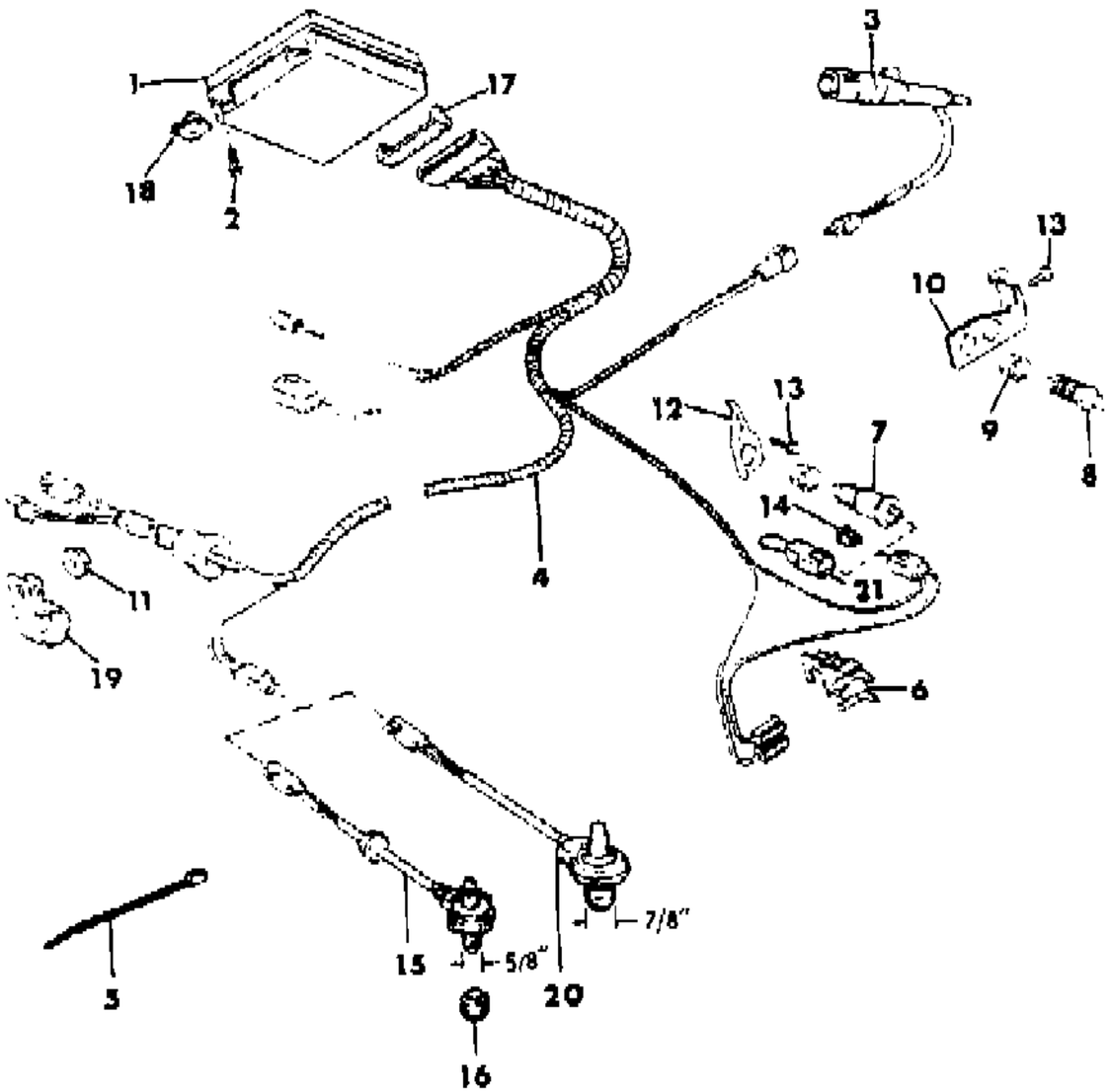

ITEM	PART NUMBER	QTY	BODY	MODEL	DESCRIPTION
1	5300 0320	1			REGULATOR, Cruise Control
2	1150 2896	1			SCREW
3	5600 0034	1			LEVER, Turn Signal
4					HARNESS, Cruise Control
	5600 0758	1			Gas Engine
	5600 1333	1			Diesel Engine, Without Factory Installed Air Conditioning
	5600 1583	1			Diesel Engine, With Factory Installed Air Conditioning
5	5600 1144	3			CLIP
6	J322 5787	1			SWITCH, Brake Lamp
7	3600 0136	1			SWITCH, Cruise Control
8	J323 2970	1			VALVE, Cruise Control Vacuum
9	J400 6789	AR			RETAINER
10	5300 0388	1			BRACKET, Cruise Control
11	1150 3745	2			NUT, Hex
12	5300 1430	1			BRACKET, Cruise Control, With Manual Transmission
13	3420 1784	2			SCREW
14	J318 6890	1			TERMINAL, Jumper, With Automatic Transmission
15	3300 2448	1			GENERATOR, Cruise Control (w/Male & Female Connector) ***
16	8350 1453	1			ADAPTER, Cruise Control Generator
17	5300 4158	1			RETAINER, Harness
18	1150 0654	2			NUT, Spring
19	J400 1717	2			CLIP
20	3300 0044	1			GENERATOR, Cruise Control ***
21	3600 0386	1			JUMPER, Cruise Control, With Automatic Transmission

MODEL CODES
16=Cherokee 2 Dr.(1981-83)
17=Cherokee 2 Dr.(1981-83)
73=Cherokee 2WD-2 Dr.(1984-86)
74=Cherokee 2WD-4 Dr.(1984-86)
18=Cherokee 4 Dr.(1981-83)
77=Cherokee 4WD-2 Dr.(1984-86)
78=Cherokee 4WD-4 Dr.(1984-86)
85=CJ-5 (1981-83)
86=CJ-6(1981)
87=CJ-7(1981-86)
88=CJ-8, Scrambler(1981-86)
64=Comanche 2WD-6 Ft. Box(1986)
66=Comanche 2WD-7 Ft. Box(1986)
63=Comanche 4WD-6 Ft. Box(1986)
65=Comanche 4WD-7 Ft. Box(1986)
15=Grand Wagoneer 4 Dr.(1984-86)
25=J-10 Truck 7 Ft. Box(1981-84)
26=J10 Truck 8 Ft. Box(1981-86)
27=J-20 Truck 8 Ft. Box(1981-86)
15=Wagoneer 4 Dr.(1981-83)
75=Wagoneer 4WD-4 Dr.(1984-86)

BODY
CJ=CJ-5, CJ-6, CJ-7, CJ-8, Scrambler(1981-86)
MJ=Comanche Pickup(1986)

STYLES
SJ=Wagoneer(1981-83), Grand Wagoneer(1984-86), Cherokee(1981-83), J-10, J-20(1981-86)
XJ=Wagoneer(1984-86), Cherokee(1984-86)

AR = Use as Required - = Non Illustrated Part P.A.R. = Paint as Required

« RETURN TO GROUP INDEX

PUMP ASSEMBLY, INJECTION DIESEL XJ CHEROKEE, XJ WAGONEER, COMANCHE
Figure 14-5600

81J14 5600

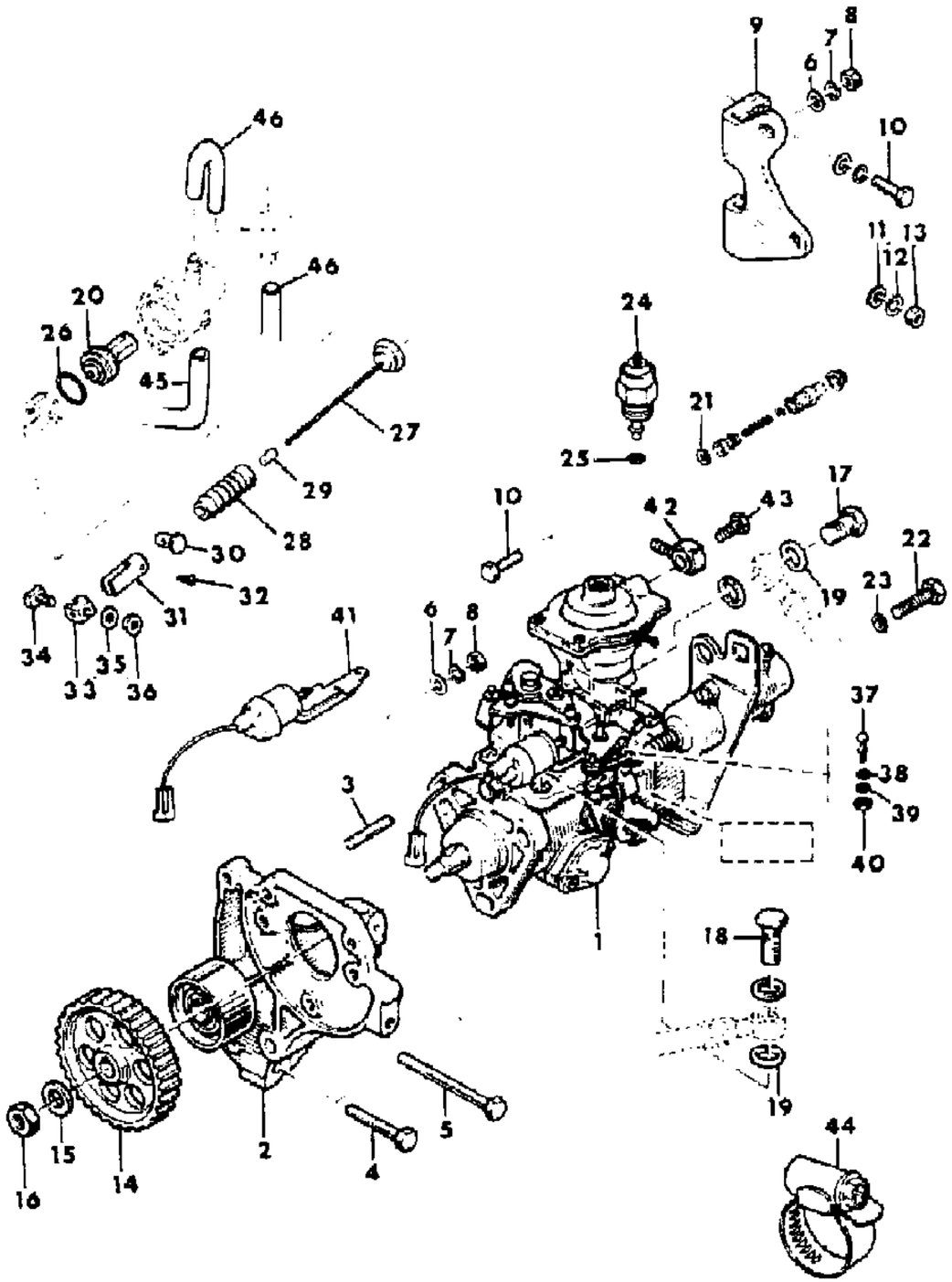

ITEM	PART NUMBER	QTY	BODY	MODEL	DESCRIPTION
1					PUMP ASSY, Injection ***
	T072 6944	1			EXPORT
	JR77 5058	1			Remanufactured
2	T600 3828	1			IDLER ASSY ***
3	T302 7191	3			STUD
4	T310 1074	1			BOLT
5	T310 1057	1			BOLT
6	1150 0255	5			WASHER
7	J012 0214	5			WASHER, Lock
8	J303 2018	5			NUT
9	T068 4886	1			SUPPORT
10	T140 5667	3			BOLT
11	T305 3043	1			WASHER
12	T140 2094	1			WASHER, Lock
13	T140 5676	1			NUT
14	T134 9585	1			SPROCKET ***
15	T067 5867	1			RING
16	T149 3071	1			NUT
17	T102 4765	1			UNION, Fuel Return ***
18	T066 7524	1			UNION, Fuel Inlet ***
19	T066 7525	4			RING, Sealing
20	T102 5228	1			CAPSULE, Thermostatic ***
21	8350 2328	4			GASKET
22	8350 2330	1			SCREW, Bleeder
23	8350 2329	1			WASHER, Sealing
24	8350 2331	1			SOLENOID, Fuel Shut-Off
25	8350 2332	1			O-RING
26	8350 2333	1			O-RING
27	8350 2334	1			CABLE, Throttle Control
28	8350 2335	1			BOOT ***
29	8350 2336	1			SLEEVE
30	8350 2337	1			TRUNNION ***
31	8350 2338	1			CLEVIS ***
32	8350 2339	1			SCREW, Set
33	8350 2340	1			CLAMP
34	8350 2341	1			SCREW, Stop
35	8350 2342	1			WASHER, Lock
36	8350 2343	1			NUT
37	8350 2344	1			STUD, Ball

MODEL CODES

16=Cherokee 2 Dr.(1981-83)
17=Cherokee 2 Dr.(1981-83)
73=Cherokee 2WD-2 Dr.(1984-86)
74=Cherokee 2WD-4 Dr.(1984-86)
18=Cherokee 4 Dr.(1981-83)
77=Cherokee 4WD-2 Dr.(1984-86)
78=Cherokee 4WD-4 Dr.(1984-86)
85=CJ-5 (1981-83)
86=CJ-6(1981)
87=CJ-7(1981-86)
88=CJ-8, Scrambler(1981-86)
64=Comanche 2WD-6 Ft. Box(1986)
66=Comanche 2WD-7 Ft. Box(1986)
63=Comanche 4WD-6 Ft. Box(1986)
65=Comanche 4WD-7 Ft. Box(1986)
15=Grand Wagoneer 4 Dr.(1984-86)
25=J-10 Truck 7 Ft. Box(1981-84)
26=J10 Truck 8 Ft. Box(1981-86)
27=J-20 Truck 8 Ft. Box(1981-86)
15=Wagoneer 4 Dr.(1981-83)
75=Wagoneer 4WD-4 Dr.(1984-86)

BODY
CJ=CJ-5, CJ-6, CJ-7, CJ-8, Scrambler(1981-86)
MJ=Comanche Pickup(1986)

STYLES
SJ=Wagoneer(1981-83), Grand Wagoneer(1984-86), Cherokee(1981-83), J-10, J-20(1981-86)
XJ=Wagoneer(1984-86), Cherokee(1984-86)

AR = Use as Required - = Non Illustrated Part P.A.R. = Paint as Required

« RETURN TO GROUP INDEX »

PUMP ASSEMBLY, INJECTION DIESEL XJ CHEROKEE, XJ WAGONEER, COMANCHE
Figure 14-5600

81J14 5600

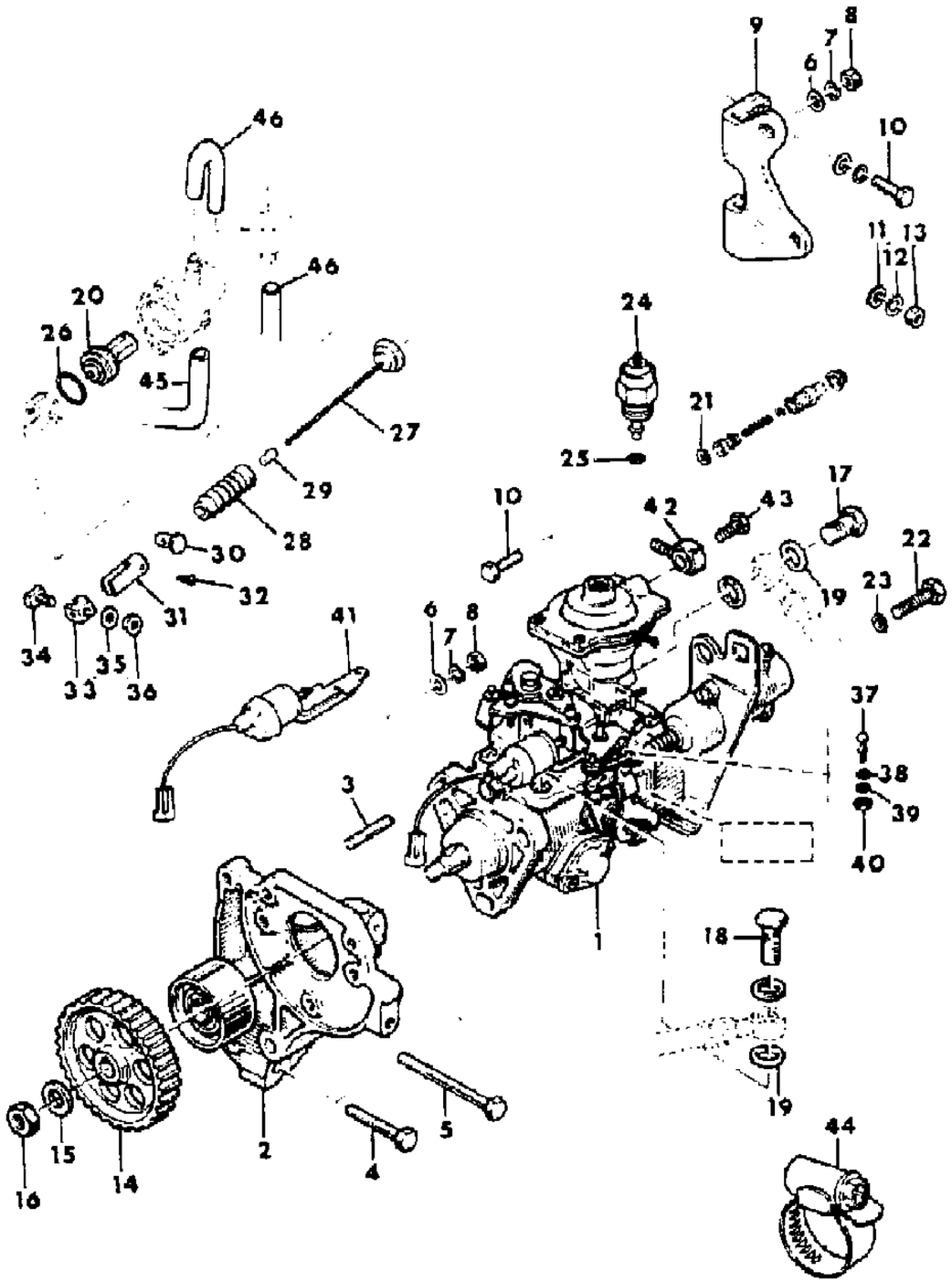

ITEM	PART NUMBER	QTY	BODY	MODEL	DESCRIPTION
38	8350 2345	1			WASHER
39	8350 2346	1			WASHER, Lock
40	8350 2347	1			NUT
41	8350 2349	1			SOLENOID, Idle Speed
42	T070 6862	1			CONNECTOR
43	T777 7756	1			UNION ***
44	3300 0785	AR			CLAMP, Hose
45	T069 0687	1			HOSE, Inlet
46	T066 5293	1			HOSE, Outlet, Modification Required

MODEL CODES

16=Cherokee 2 Dr.(1981-83)
17=Cherokee 2 Dr.(1981-83)
73=Cherokee 2WD-2 Dr.(1984-86)
74=Cherokee 2WD-4 Dr.(1984-86)
18=Cherokee 4 Dr.(1981-83)
77=Cherokee 4WD-2 Dr.(1984-86)
78=Cherokee 4WD-4 Dr.(1984-86)
85=CJ-5 (1981-83)
86=CJ-6(1981)
87=CJ-7(1981-86)
88=CJ-8, Scrambler(1981-86)
64=Comanche 2WD-6 Ft. Box(1986)
66=Comanche 2WD-7 Ft. Box(1986)
63=Comanche 4WD-6 Ft. Box(1986)
65=Comanche 4WD-7 Ft. Box(1986)
15=Grand Wagoneer 4 Dr.(1984-86)
25=J-10 Truck 7 Ft. Box(1981-84)
26=J10 Truck 8 Ft. Box(1981-86)
27=J-20 Truck 8 Ft. Box(1981-86)
15=Wagoneer 4 Dr.(1981-83)
75=Wagoneer 4WD-4 Dr.(1984-86)

BODY
CJ=CJ-5, CJ-6, CJ-7, CJ-8, Scrambler(1981-86)
MJ=Comanche Pickup(1986)

STYLES
SJ=Wagoneer(1981-83), Grand Wagoneer(1984-86), Cherokee(1981-83), J-10, J-20(1981-86)
XJ=Wagoneer(1984-86), Cherokee(1984-86)

AR = Use as Required - = Non Illustrated Part P.A.R. = Paint as Required

« RETURN TO GROUP INDEX

FUEL PUMP AND FILTER FOUR CYLINDER GAS, CARBURETED XJ CHEROKEE, XJ WAGONEER, COMANCHE
Figure 14-5700

81J14 5700

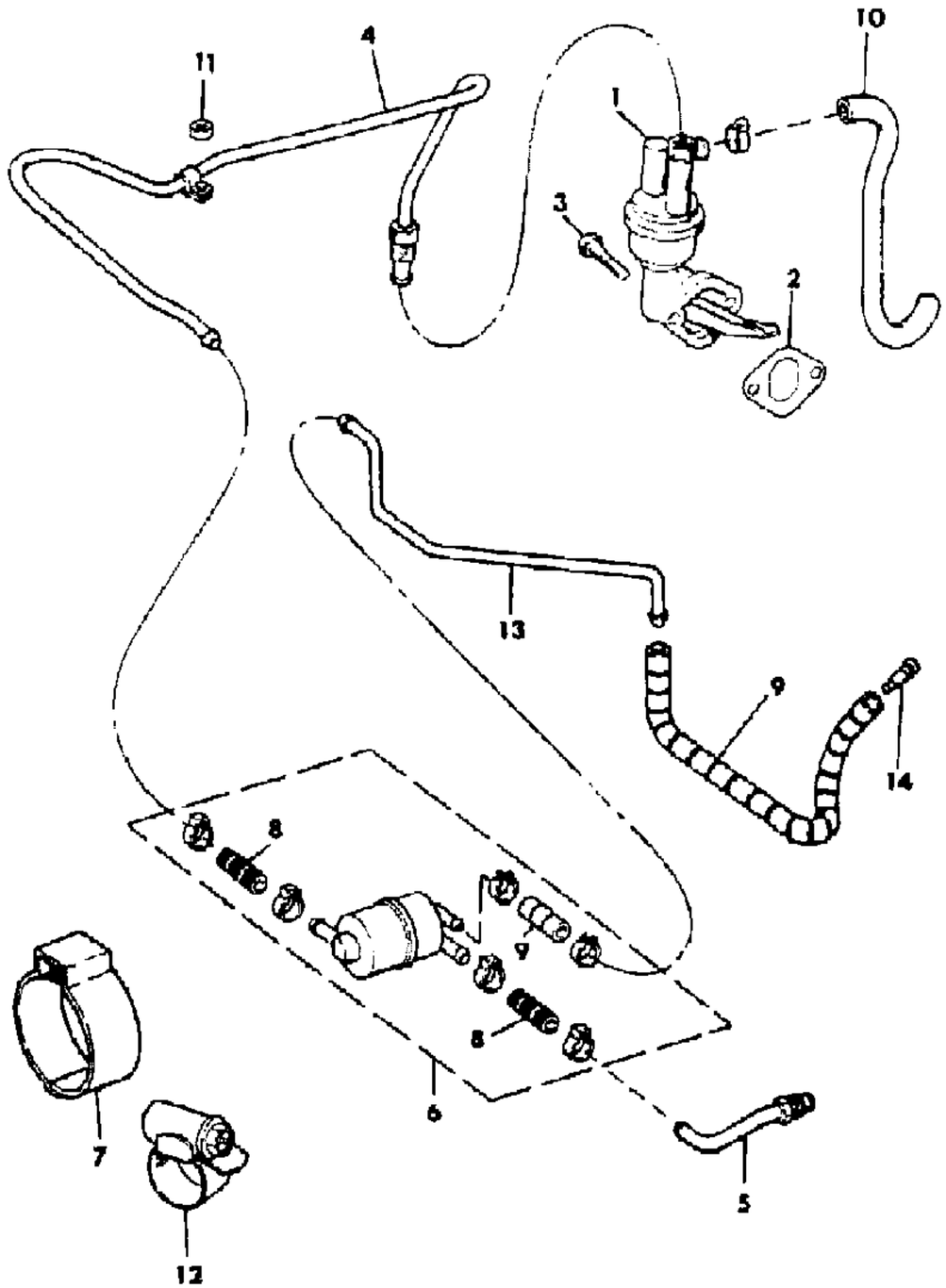

ITEM	PART NUMBER	QTY	BODY	MODEL	DESCRIPTION
1	3300 2652	1			PUMP, Fuel
2	J317 4685	1			GASKET, Fuel Pump
3	J018 0079	2			BOLT
4					TUBE
	3300 2036	1			1984-85
	5300 2566	1			1986
5					TUBE
	3300 1522	1			1984-85
	5300 2567	1			1986
6	8350 0998	1			FILTER PACKAGE, Fuel
7					CLAMP, Hose
	J322 7851	AR			0.60"
	J322 7852	AR			0.66"
8	J812 5823	AR			HOSE, Bulk
9	J812 5843	AR			HOSE, Bulk
10	J323 5908	1			HOSE
11	J941 6918	1			NUT
12	3300 0785	1			CLAMP, Hose
13	5300 2569	1			TUBE, Fuel Return
14	J323 2144	1			VALVE

MODEL CODES

16=Cherokee 2 Dr.(1981-83)
17=Cherokee 2 Dr.(1981-83)
73=Cherokee 2WD-2 Dr.(1984-86)
74=Cherokee 2WD-4 Dr.(1984-86)
18=Cherokee 4 Dr.(1981-83)
77=Cherokee 4WD-2 Dr.(1984-86)
78=Cherokee 4WD-4 Dr.(1984-86)
85=CJ-5 (1981-83)
86=CJ-6(1981)
87=CJ-7(1981-86)
88=CJ-8, Scrambler(1981-86)
64=Comanche 2WD-6 Ft. Box(1986)
66=Comanche 2WD-7 Ft. Box(1986)
63=Comanche 4WD-6 Ft. Box(1986)
65=Comanche 4WD-7 Ft. Box(1986)
15=Grand Wagoneer 4 Dr.(1984-86)
25=J-10 Truck 7 Ft. Box(1981-84)
26=J10 Truck 8 Ft. Box(1981-86)
27=J-20 Truck 8 Ft. Box(1981-86)
15=Wagoneer 4 Dr.(1981-83)
75=Wagoneer 4WD-4 Dr.(1984-86)

BODY
CJ=CJ-5, CJ-6, CJ-7, CJ-8, Scrambler(1981-86)
MJ=Comanche Pickup(1986)

STYLES
SJ=Wagoneer(1981-83), Grand Wagoneer(1984-86), Cherokee(1981-83), J-10, J-20(1981-86)
XJ=Wagoneer(1984-86), Cherokee(1984-86)

AR = Use as Required - = Non Illustrated Part P.A.R. = Paint as Required

« RETURN TO GROUP INDEX

FUEL PUMP SIX CYLINDER, V-6 XJ CHEROKEE, XJ WAGONEER, COMANCHE
Figure 14-5800

81J14 5800

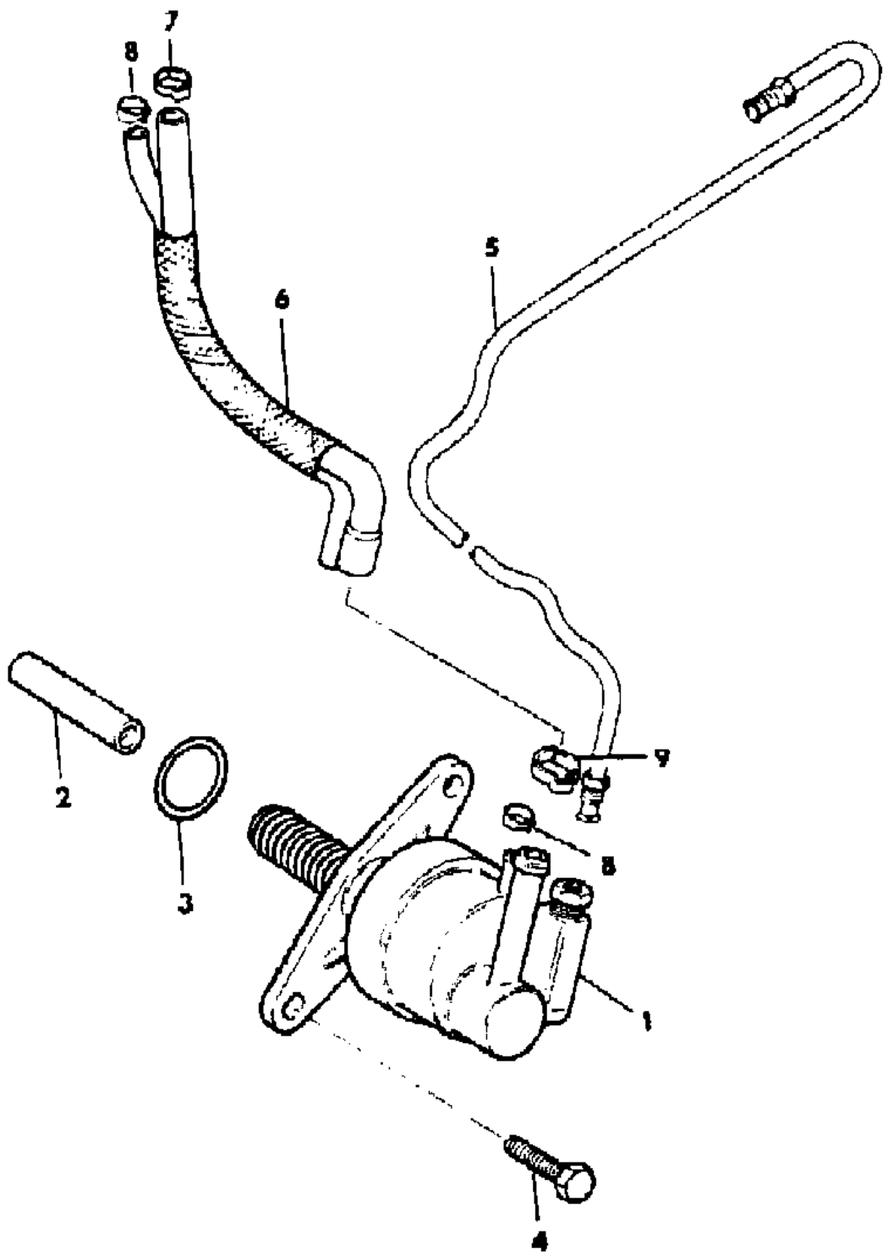

ITEM	PART NUMBER	QTY	BODY	MODEL	DESCRIPTION
1					PUMP, Fuel
	8350 0873	1			1984-85
	8350 2715	1			1986
2	8350 0875	1			ROD, Fuel Pump Push
3	8350 0874	1			SEAL, Fuel Pump
4	S150 8017	2			BOLT
5					TUBE
	3300 2192	1			1984-85
	5300 2573	1			1986
6	5300 1624	1			HARNESS ASSY, Fuel ***
7	J322 7851	1			CLAMP, Hose
8	J318 0725	2			CLAMP, Hose
9	J322 7852	1			CLAMP, Hose

MODEL CODES

16=Cherokee 2 Dr.(1981-83)
17=Cherokee 2 Dr.(1981-83)
73=Cherokee 2WD-2 Dr.(1984-86)
74=Cherokee 2WD-4 Dr.(1984-86)
18=Cherokee 4 Dr.(1981-83)
77=Cherokee 4WD-2 Dr.(1984-86)
78=Cherokee 4WD-4 Dr.(1984-86)
85=CJ-5 (1981-83)
86=CJ-6(1981)
87=CJ-7(1981-86)
88=CJ-8, Scrambler(1981-86)
64=Comanche 2WD-6 Ft. Box(1986)
66=Comanche 2WD-7 Ft. Box(1986)
63=Comanche 4WD-6 Ft. Box(1986)
65=Comanche 4WD-7 Ft. Box(1986)
15=Grand Wagoneer 4 Dr.(1984-86)
25=J-10 Truck 7 Ft. Box(1981-84)
26=J10 Truck 8 Ft. Box(1981-86)
27=J-20 Truck 8 Ft. Box(1981-86)
15=Wagoneer 4 Dr.(1981-83)
75=Wagoneer 4WD-4 Dr.(1984-86)

BODY
CJ=CJ-5, CJ-6, CJ-7, CJ-8, Scrambler(1981-86)
MJ=Comanche Pickup(1986)

STYLES
SJ=Wagoneer(1981-83), Grand Wagoneer(1984-86), Cherokee(1981-83), J-10, J-20(1981-86)
XJ=Wagoneer(1984-86), Cherokee(1984-86)

AR = Use as Required - = Non Illustrated Part P.A.R. = Paint as Required

« RETURN TO GROUP INDEX

FUEL LINES 1985-86 RENAULT DIESEL XJ CHEROKEE, XJ WAGONEER, COMANCHE
Figure 14-5900

81J14 5900

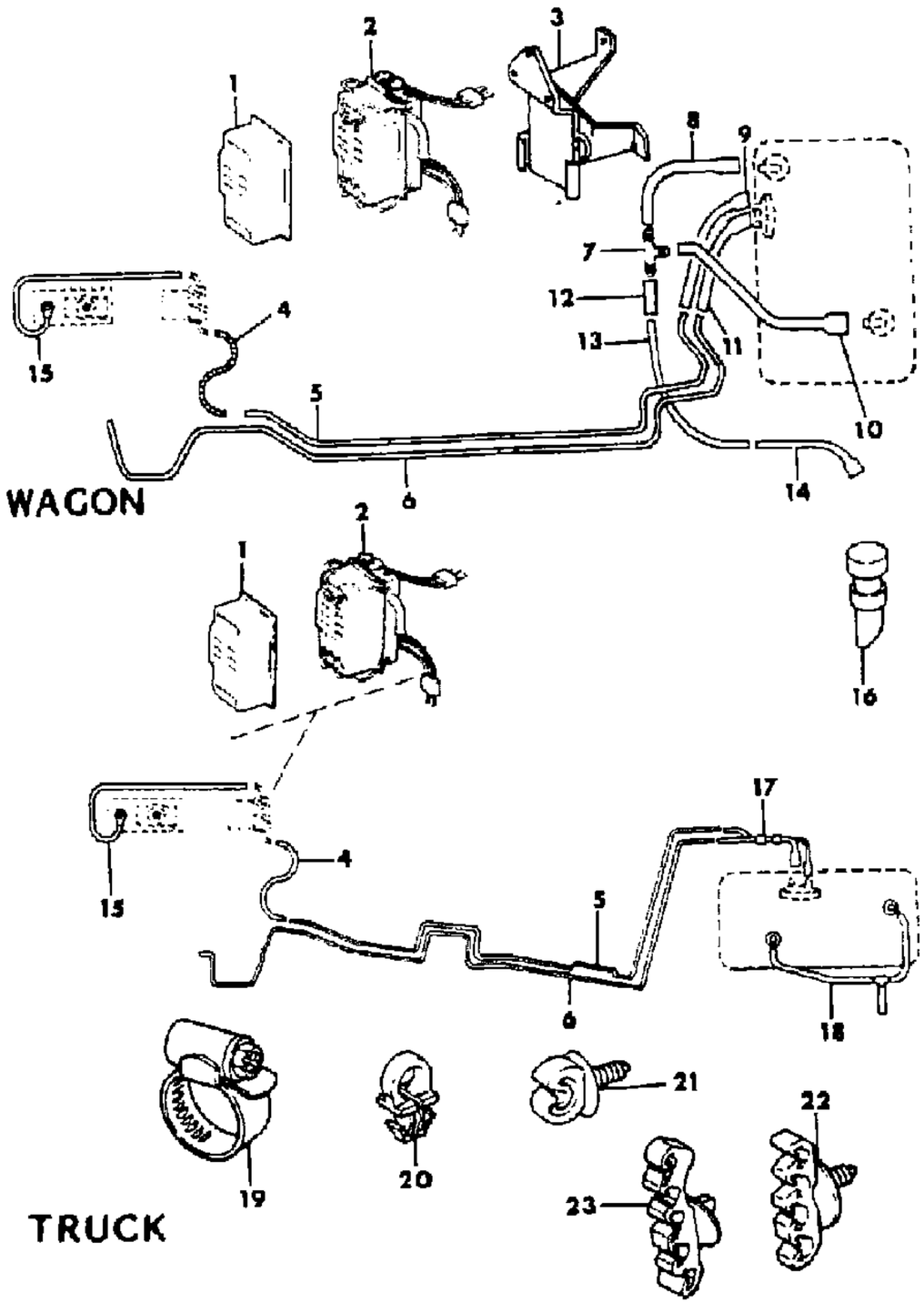

ITEM	PART NUMBER	QTY	BODY	MODEL	DESCRIPTION
1	8350 1902	1			FILTER, Fuel
2	5300 1742	1			FILTER ASSY, Fuel ***
3	5300 2855	1			BRACKET, Fuel Filter Mounting
4	J812 5823	AR			HOSE, Bulk
5					TUBE, Fuel Supply
	5300 1194	1		XJ	
	5300 2583	1		MJ	
6					TUBE, Fuel Return
	5300 1195	1		XJ	
	5300 2584	1		MJ	
7	J321 0891	1			TEE
8	5300 0194	1			HOSE
9	5300 1662	1			HOSE
10	3300 0058	1			HOSE
11	5300 1428	1			HOSE
12	J812 5995	AR			HOSE, Bulk
13	5300 1741	1			TUBE, Fuel Vent
14	5300 1740	1			HOSE
15	T072 8617	1			HOSE ASSY, Fuel Supply ***
16	J535 2955	1			CAP, Vent
17	5300 3426	1			HOSE ASSY ***
18	5300 3427	1			HOSE ASSY ***
19					CLAMP, Hose
	3300 0785	AR			X=.47" thru .79"
	3300 0786	AR			X=.28" thru .59"
20	3420 1633	1			CLIP
21	3200 0404	AR			CLIP
22	3420 2371	AR			CLIP
23	3420 2414	AR			CLIP

MODEL CODES

16=Cherokee 2 Dr.(1981-83)	78=Cherokee 4WD-4 Dr.(1984-86)	64=Comanche 2WD-6 Ft. Box(1986)	25=J-10 Truck 7 Ft. Box(1981-84)
17=Cherokee 2 Dr.(1981-83)	85=CJ-5 (1981-83)	66=Comanche 2WD-7 Ft. Box(1986)	26=J10 Truck 8 Ft. Box(1981-86)
73=Cherokee 2WD-2 Dr.(1984-86)	86=CJ-6(1981)	63=Comanche 4WD-6 Ft. Box(1986)	27=J-20 Truck 8 Ft. Box(1981-86)
74=Cherokee 2WD-4 Dr.(1984-86)	87=CJ-7(1981-86)	65=Comanche 4WD-7 Ft. Box(1986)	15=Wagoneer 4 Dr.(1981-83)
18=Cherokee 4 Dr.(1981-83)	88=CJ-8, Scrambler(1981-86)	15=Grand Wagoneer 4 Dr.(1984-86)	75=Wagoneer 4WD-4 Dr.(1984-86)
77=Cherokee 4WD-2 Dr.(1984-86)			

BODY
CJ=CJ-5, CJ-6, CJ-7, CJ-8, Scrambler(1981-86)
MJ=Comanche Pickup(1986)

STYLES
SJ=Wagoneer(1981-83), Grand Wagoneer(1984-86), Cherokee(1981-83), J-10, J-20(1981-86)
XJ=Wagoneer(1984-86), Cherokee(1984-86)

AR = Use as Required - = Non Illustrated Part P.A.R. = Paint as Required

« RETURN TO GROUP INDEX

FUEL LINES 1984-85 FOUR AND SIX CYLINDER, V-6 XJ CHEROKEE, XJ WAGONEER, COMANCHE
Figure 14-6000

81J14 6000

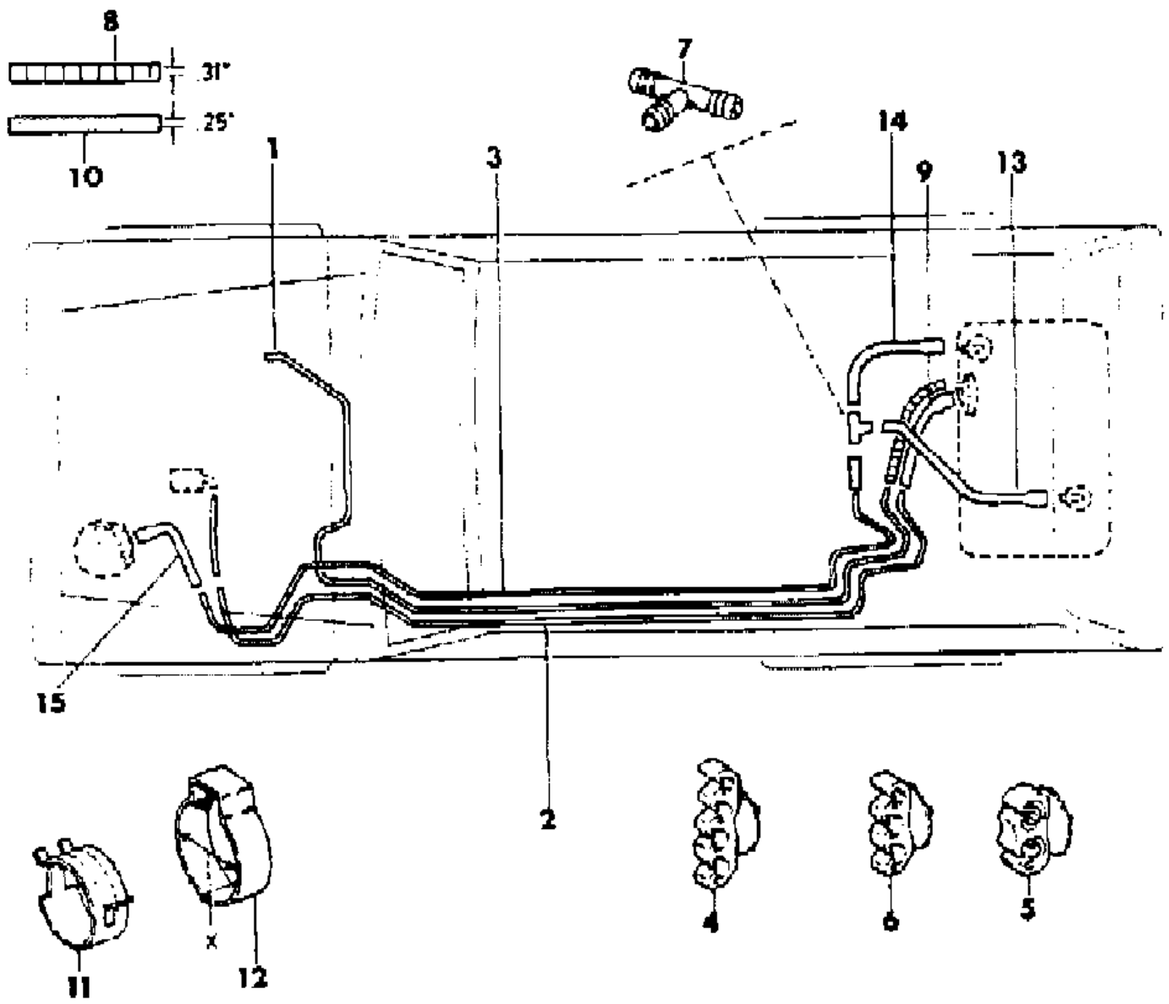

ITEM	PART NUMBER	QTY	BODY	MODEL	DESCRIPTION
1					TUBE, Fuel Supply
	5300 0157	1			Four Cylinder
	5300 0162	1			Six Cylinder
2	5300 0158	1			TUBE, Fuel Return
3	5300 0159	1			TUBE, Fuel Vent
4	5300 0585	6			CLIP, Tube
5	3200 0403	5			CLIP, Tube
6	3300 0202	5			CLIP, Tube
7	J321 0891	1			TEE
8	J812 5823	AR			HOSE, Bulk
9	5300 1428	1			HOSE
10	J812 5995	AR			HOSE, Bulk
11	J318 0725	AR			CLAMP, Hose
12					CLAMP, Hose
	J322 7851	AR			X=.60"
	J322 7852	AR			X=.66"
	J322 7850	AR			X=.53"
13	3300 0058	1			HOSE
14	5300 0194	1			HOSE
15	3300 0057	1			HOSE, Four Cylinder, 1984

MODEL CODES

16=Cherokee 2 Dr.(1981-83)
17=Cherokee 2 Dr.(1981-83)
73=Cherokee 2WD-2 Dr.(1984-86)
74=Cherokee 2WD-4 Dr.(1984-86)
18=Cherokee 4 Dr.(1981-83)
77=Cherokee 4WD-2 Dr.(1984-86)
78=Cherokee 4WD-4 Dr.(1984-86)
85=CJ-5 (1981-83)
86=CJ-6(1981)
87=CJ-7(1981-86)
88=CJ-8, Scrambler(1981-86)
64=Comanche 2WD-6 Ft. Box(1986)
66=Comanche 2WD-7 Ft. Box(1986)
63=Comanche 4WD-6 Ft. Box(1986)
65=Comanche 4WD-7 Ft. Box(1986)
15=Grand Wagoneer 4 Dr.(1984-86)
25=J-10 Truck 7 Ft. Box(1981-84)
26=J10 Truck 8 Ft. Box(1981-86)
27=J-20 Truck 8 Ft. Box(1981-86)
15=Wagoneer 4 Dr.(1981-83)
75=Wagoneer 4WD-4 Dr.(1984-86)

BODY
CJ=CJ-5, CJ-6, CJ-7, CJ-8, Scrambler(1981-86)
MJ=Comanche Pickup(1986)

STYLES
SJ=Wagoneer(1981-83), Grand Wagoneer(1984-86), Cherokee(1981-83), J-10, J-20(1981-86)
XJ=Wagoneer(1984-86), Cherokee(1984-86)

AR = Use as Required - = Non Illustrated Part P.A.R. = Paint as Required

« RETURN TO GROUP INDEX

FUEL LINES 1986 FOUR CYLINDER GAS, INJECTED, SIX CYLINDER XJ CHEROKEE, XJ WAGONEER, COMANCHE
Figure 14-6100

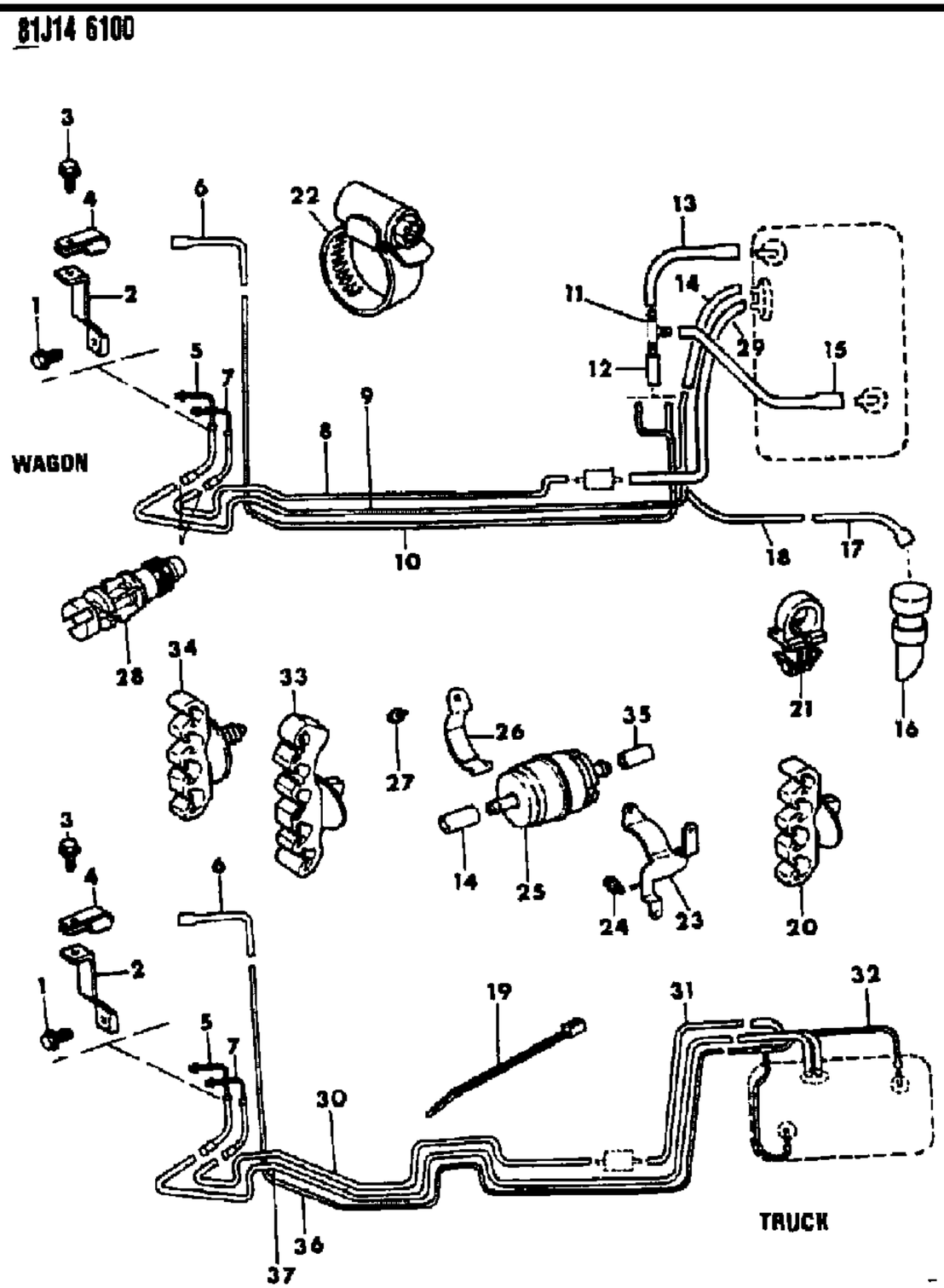

ITEM	PART NUMBER	QTY	BODY	MODEL	DESCRIPTION
1					BOLT
	J027 1444	1			Four Cylinder, Injected
2					BRACKET
	5300 3045	1			Four Cylinder, Injected
3					SCREW
	3420 1193	1			Four Cylinder, Injected
4					CLIP
	J400 7063	1			Four Cylinder, Injected
5					HOSE ASSY, Fuel Return ***
	5300 4496	1			Four Cylinder, Injected
6					HOSE
					Four Cylinder, Injected
	5300 4608	1			Economic Commission of Europe for Vehicles using Unleaded Fuel
	5300 4608	1			US
7					HOSE ASSY, Fuel Supply ***
	5300 4495	1			Four Cylinder, Injected
8					TUBE, Fuel Supply
	5300 4486	1			Four Cylinder, Injected
	5300 2568	1			Four Cylinder, Carbureted, Non-Regulated Markets
	5300 2572	1			Six Cylinder
9					TUBE, Fuel Return
	5300 4487	1			Four Cylinder, Injected
	5300 2571	1			Four Cylinder, Carbureted
10					TUBE, Fuel Vent
	5300 2651	1			Four Cylinder, Injected
	5300 0159	1			Six Cylinder
11	J321 0891	1			TEE
12	J812 5995	AR			HOSE, Bulk
13	5300 0194	1			HOSE, Vent
14					HOSE, Return
	5300 1428	1			Four Cylinder, Carbureted
	5300 1428	1			Six Cylinder
	J812 5823	AR			Four Cylinder, Injected, Bulk
15	3300 0058	1			HOSE, Vent
16					CAP, Vent
	J535 2955	1			Four Cylinder, Carbureted, Non-Regulated Markets
17					HOSE
	5300 1740	1			Four Cylinder, Carbureted, Non-Regulated Markets

MODEL CODES

16=Cherokee 2 Dr.(1981-83)
17=Cherokee 2 Dr.(1981-83)
73=Cherokee 2WD-2 Dr.(1984-86)
74=Cherokee 2WD-4 Dr.(1984-86)
18=Cherokee 4 Dr.(1981-83)
77=Cherokee 4WD-2 Dr.(1984-86)
78=Cherokee 4WD-4 Dr.(1984-86)
85=CJ-5 (1981-83)
86=CJ-6(1981)
87=CJ-7(1981-86)
88=CJ-8, Scrambler(1981-86)
64=Comanche 2WD-6 Ft. Box(1986)
66=Comanche 2WD-7 Ft. Box(1986)
63=Comanche 4WD-6 Ft. Box(1986)
65=Comanche 4WD-7 Ft. Box(1986)
15=Grand Wagoneer 4 Dr.(1984-86)
25=J-10 Truck 7 Ft. Box(1981-84)
26=J10 Truck 8 Ft. Box(1981-86)
27=J-20 Truck 8 Ft. Box(1981-86)
15=Wagoneer 4 Dr.(1981-83)
75=Wagoneer 4WD-4 Dr.(1984-86)

BODY
CJ=CJ-5, CJ-6, CJ-7, CJ-8, Scrambler(1981-86)
MJ=Comanche Pickup(1986)

STYLES
SJ=Wagoneer(1981-83), Grand Wagoneer(1984-86), Cherokee(1981-83), J-10, J-20(1981-86)
XJ=Wagoneer(1984-86), Cherokee(1984-86)

AR = Use as Required - = Non Illustrated Part P.A.R. = Paint as Required

FUEL LINES 1986 FOUR CYLINDER GAS, INJECTED, SIX CYLINDER XJ CHEROKEE, XJ WAGONEER, COMANCHE
Figure 14-6100

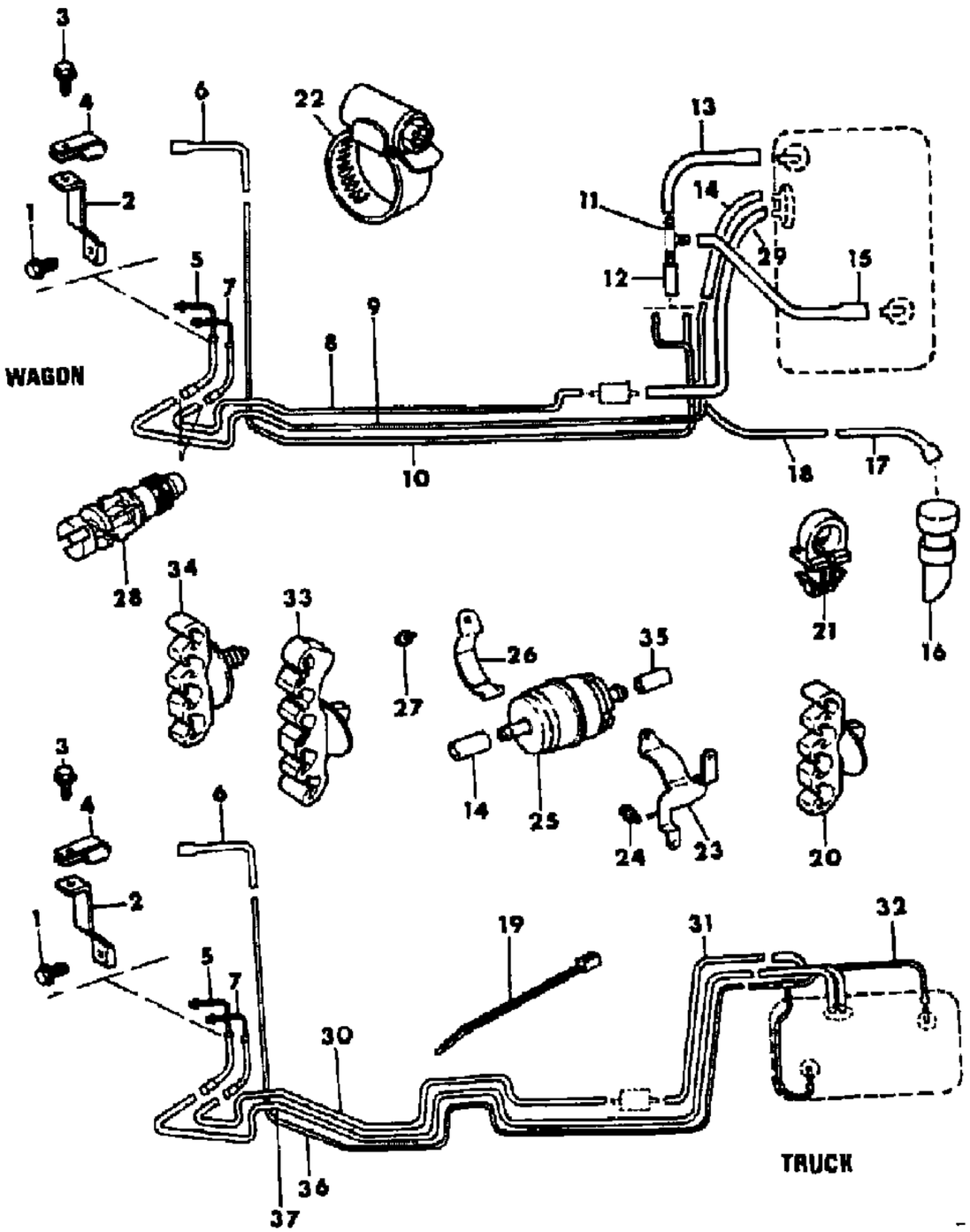

ITEM	PART NUMBER	QTY	BODY	MODEL	DESCRIPTION
18					TUBE, Fuel Vent
	5300 1741	1			Four Cylinder, Carbureted, Non-Regulated Markets
19	5600 1144	3			STRAP, Tie
20					CLIP
	5300 0585	AR			Four Cylinder, Injected
21	3420 1633	AR			CLIP
22					CLAMP, Hose
	3300 0785	AR			x=.47" thru .78"
	3300 0786	AR			X=.28" thru .59"
23					BRACKET, Mounting
	5300 2198	1			Four Cylinder, Injected
24					SCREW
	3420 1756	2			Four Cylinder, Injected
25					FILTER, Fuel
	3300 0076	1			Four Cylinder, Injected
26					CLAMP, Fuel Filter
	3300 0203	1			Four Cylinder, Injected
27					SCREW
	1150 2453	1			Four Cylinder, Injected
28					REPAIR PACKAGE
	8350 2745	2			Four Cylinder, Injected
29					HOSE, Supply
	5300 2189	1			Four Cylinder, Injected
	5300 1662	1			Four Cylinder, Carbureted
	5300 1662	1			Six Cylinder
30					TUBE, Fuel Supply
	5300 4484	1			Four Cylinder, Injected
	5300 1688	1			Four Cylinder, Carbureted (One Piece)
31					TUBE, Fuel Supply
	5300 2192	1			Four Cylinder, Injected
	5300 1688	1			Four Cylinder, Carbureted (One Piece)
32					HOSE ASSY ***
	5300 2762	1			Four Cylinder, Injected
	5300 2761	1			Six Cylinder
33	3420 2414	AR			CLIP, Tube
34					CLIP
	3420 2371	AR			Four Cylinder, Injected
35					HOSE, Bulk
	J812 5781	AR			Four Cylinder, Injected

MODEL CODES

16=Cherokee 2 Dr.(1981-83)	78=Cherokee 4WD-4 Dr.(1984-86)	64=Comanche 2WD-6 Ft. Box(1986)	25=J-10 Truck 7 Ft. Box(1981-84)
17=Cherokee 2 Dr.(1981-83)	85=CJ-5 (1981-83)	66=Comanche 2WD-7 Ft. Box(1986)	26=J10 Truck 8 Ft. Box(1981-86)
73=Cherokee 2WD-2 Dr.(1984-86)	86=CJ-6(1981)	63=Comanche 4WD-6 Ft. Box(1986)	27=J-20 Truck 8 Ft. Box(1981-86)
74=Cherokee 2WD-4 Dr.(1984-86)	87=CJ-7(1981-86)	65=Comanche 4WD-7 Ft. Box(1986)	15=Wagoneer 4 Dr.(1981-83)
18=Cherokee 4 Dr.(1981-83)	88=CJ-8, Scrambler(1981-86)	15=Grand Wagoneer 4 Dr.(1984-86)	75=Wagoneer 4WD-4 Dr.(1984-86)
77=Cherokee 4WD-2 Dr.(1984-86)			

BODY
CJ=CJ-5, CJ-6, CJ-7, CJ-8, Scrambler(1981-86)
MJ=Comanche Pickup(1986)

STYLES
SJ=Wagoneer(1981-83), Grand Wagoneer(1984-86), Cherokee(1981-83), J-10, J-20(1981-86)
XJ=Wagoneer(1984-86), Cherokee(1984-86)

AR = Use as Required - = Non Illustrated Part P.A.R. = Paint as Required

FUEL LINES 1986 FOUR CYLINDER GAS, INJECTED, SIX CYLINDER XJ CHEROKEE, XJ WAGONEER, COMANCHE
Figure 14-6100

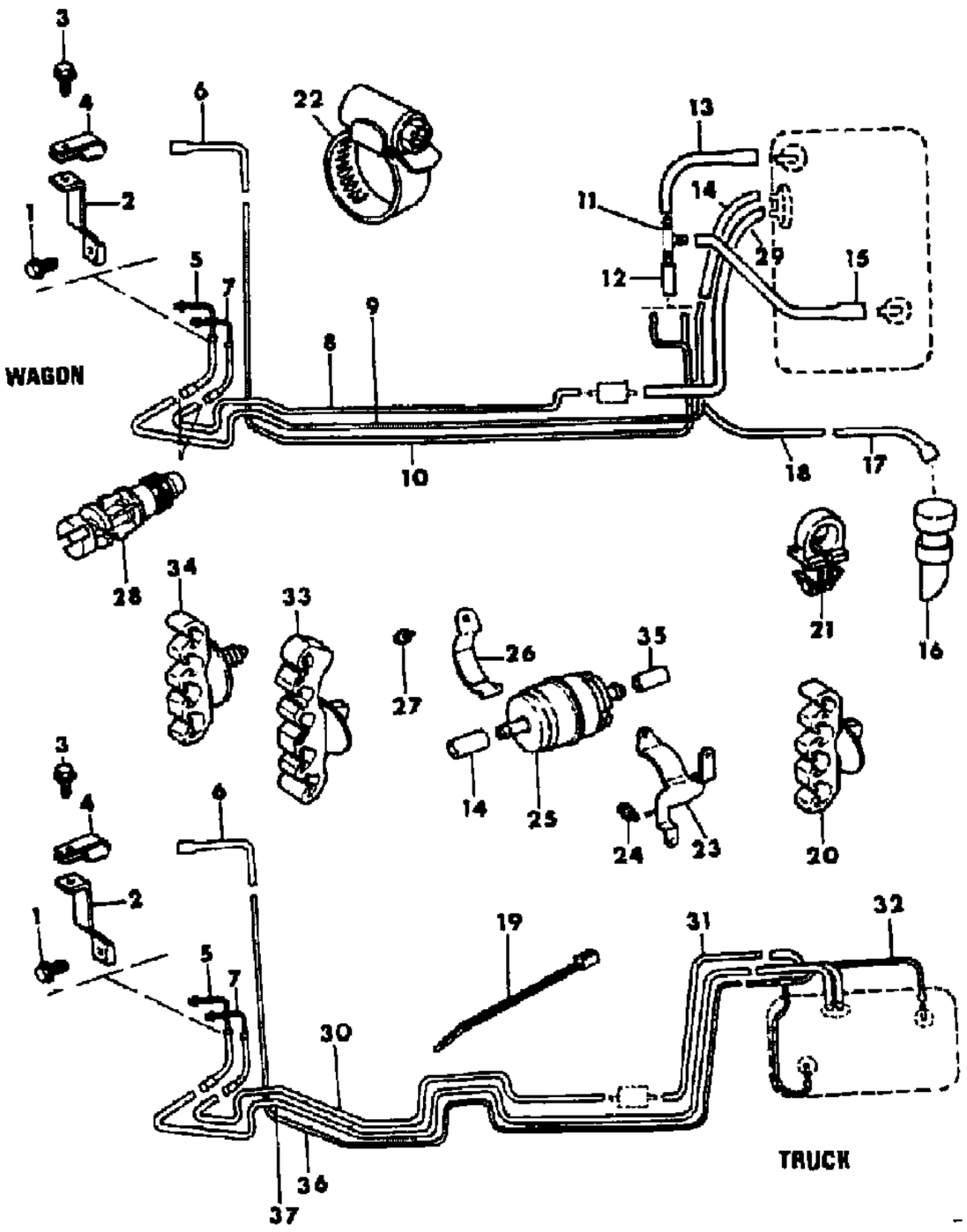

ITEM	PART NUMBER	QTY	BODY	MODEL	DESCRIPTION
36					TUBE, Fuel Vent
	5300 2547	AR			Four Cylinder, Injected
37					TUBE, Fuel Return
	5300 4485	1			Four Cylinder, Injected ***

MODEL CODES

16=Cherokee 2 Dr.(1981-83)
17=Cherokee 2 Dr.(1981-83)
73=Cherokee 2WD-2 Dr.(1984-86)
74=Cherokee 2WD-4 Dr.(1984-86)
18=Cherokee 4 Dr.(1981-83)
77=Cherokee 4WD-2 Dr.(1984-86)
78=Cherokee 4WD-4 Dr.(1984-86)
85=CJ-5 (1981-83)
86=CJ-6(1981)
87=CJ-7(1981-86)
88=CJ-8, Scrambler(1981-86)
64=Comanche 2WD-6 Ft. Box(1986)
66=Comanche 2WD-7 Ft. Box(1986)
63=Comanche 4WD-6 Ft. Box(1986)
65=Comanche 4WD-7 Ft. Box(1986)
15=Grand Wagoneer 4 Dr.(1984-86)
25=J-10 Truck 7 Ft. Box(1981-84)
26=J10 Truck 8 Ft. Box(1981-86)
27=J-20 Truck 8 Ft. Box(1981-86)
15=Wagoneer 4 Dr.(1981-83)
75=Wagoneer 4WD-4 Dr.(1984-86)

BODY
CJ=CJ-5, CJ-6, CJ-7, CJ-8, Scrambler(1981-86)
MJ=Comanche Pickup(1986)

STYLES
SJ=Wagoneer(1981-83), Grand Wagoneer(1984-86), Cherokee(1981-83), J-10, J-20(1981-86)
XJ=Wagoneer(1984-86), Cherokee(1984-86)

AR = Use as Required - = Non Illustrated Part P.A.R. = Paint as Required

« RETURN TO GROUP INDEX

FUEL LINES 1986 FOUR CYLINDER GAS, CARBURETED COMANCHE
Figure 14-6200

81J14 6200

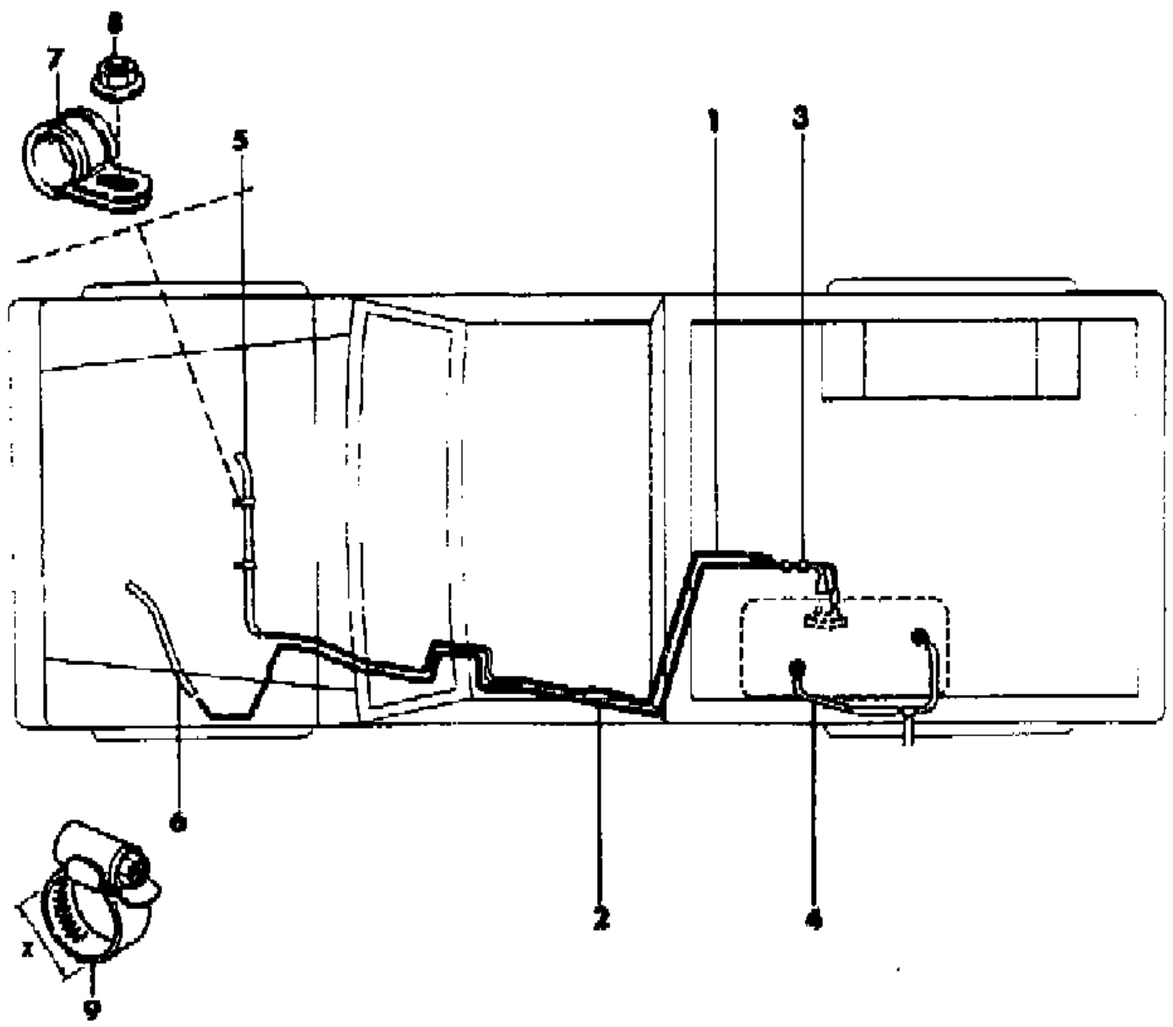

ITEM	PART NUMBER	QTY	BODY	MODEL	DESCRIPTION
1	5300 4541	1			TUBE, Fuel Supply
2	5300 1306	1			TUBE, Fuel Return
3	5300 3426	1			HOSE ASSY ***
4	5300 3427	1			HOSE ASSY ***
5	J812 5823	AR			HOSE, Bulk
6	J812 5843	AR			HOSE, Bulk
7	J400 5341	2			CLIP
8	3420 1246	2			NUT
9					CLAMP, Hose
	3300 0785	AR			X=.47" Thru .78"
	3300 0786	AR			X=.28" Thru .59"

MODEL CODES

16=Cherokee 2 Dr.(1981-83)	78=Cherokee 4WD-4 Dr.(1984-86)	64=Comanche 2WD-6 Ft. Box(1986)	25=J-10 Truck 7 Ft. Box(1981-84)
17=Cherokee 2 Dr.(1981-83)	85=CJ-5 (1981-83)	66=Comanche 2WD-7 Ft. Box(1986)	26=J10 Truck 8 Ft. Box(1981-86)
73=Cherokee 2WD-2 Dr.(1984-86)	86=CJ-6(1981)	63=Comanche 4WD-6 Ft. Box(1986)	27=J-20 Truck 8 Ft. Box(1981-86)
74=Cherokee 2WD-4 Dr.(1984-86)	87=CJ-7(1981-86)	65=Comanche 4WD-7 Ft. Box(1986)	15=Wagoneer 4 Dr.(1981-83)
18=Cherokee 4 Dr.(1981-83)	88=CJ-8, Scrambler(1981-86)	15=Grand Wagoneer 4 Dr.(1984-86)	75=Wagoneer 4WD-4 Dr.(1984-86)
77=Cherokee 4WD-2 Dr.(1984-86)			

BODY
CJ=CJ-5, CJ-6, CJ-7, CJ-8, Scrambler(1981-86)
MJ=Comanche Pickup(1986)

STYLES
SJ=Wagoneer(1981-83), Grand Wagoneer(1984-86), Cherokee(1981-83), J-10, J-20(1981-86)
XJ=Wagoneer(1984-86), Cherokee(1984-86)

AR = Use as Required - = Non Illustrated Part P.A.R. = Paint as Required

« RETURN TO GROUP INDEX

FUEL TANK 13.5 OR 20.2 GALLON XJ CHEROKEE, XJ WAGONEER
Figure 14-6300

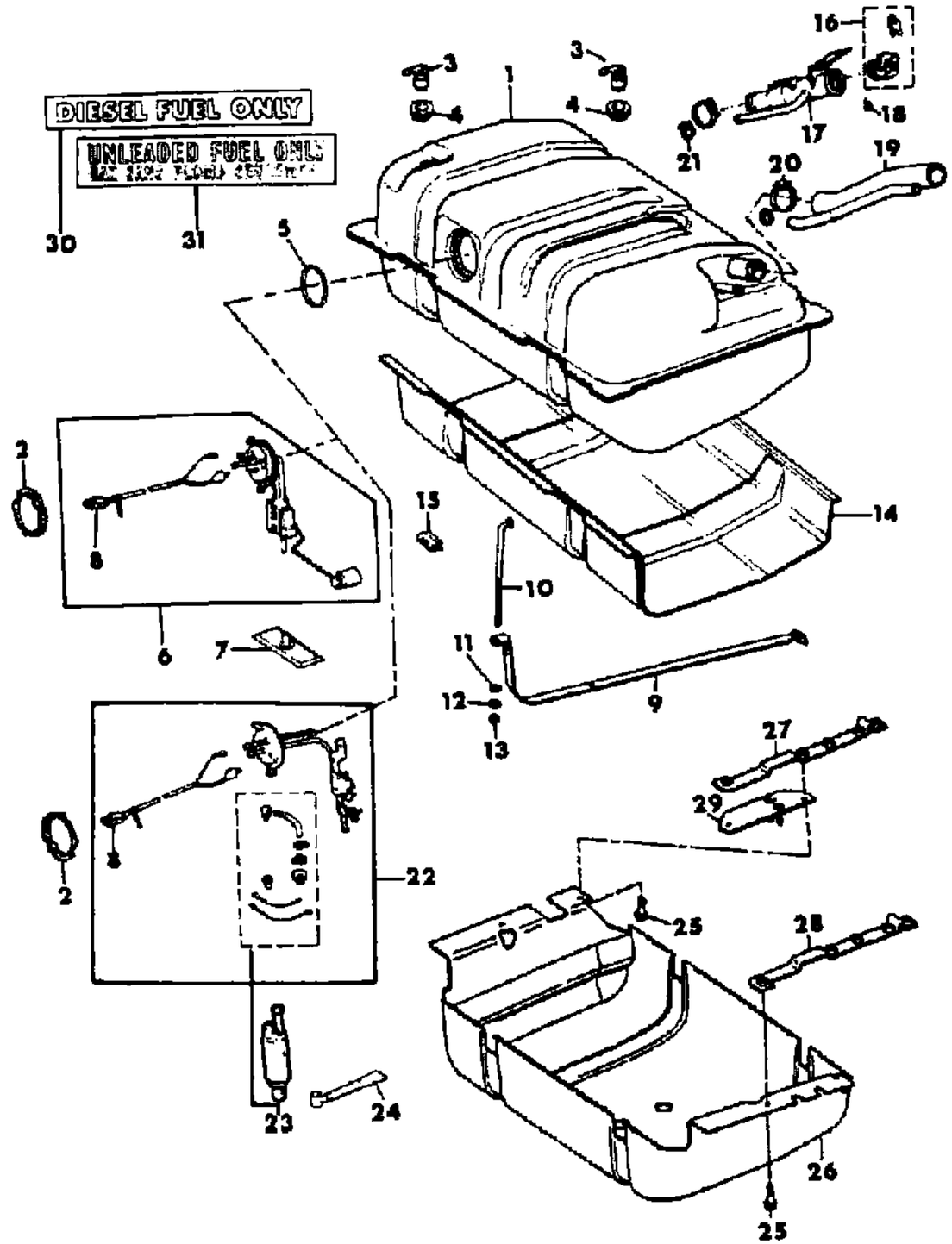

ITEM	PART NUMBER	QTY	BODY	MODEL	DESCRIPTION
1					TANK, Fuel
	8350 0267	1			1984-85: 20.2 Gallon
	8350 0268	1			1984-85: 13.5 Gallon
					Gas, Carbureted
	8350 0267	1			1986: 20.2
	8350 0267	1			1986: 13.5 Gallon, also use 1 of 53003062
					Gas Injected
	8350 2633	1			1986: 20.2 Gallon
	8350 2633	1			1986: 13.5 Gallon, also use 1 of 83502731 Four Cylinder, or 1 of 83503397 Six Cylinder
					Diesel
	8350 0267	1			1986: 20.2 Gallon
	8350 0267	1			1986: 13.5 Gallon, also use 1 of 53003066
2	5300 0584	1			LOCK
3	J536 0058	2			VALVE
4	J536 0059	2			SEAL
5	5300 0575	1			O-RING
6					SENDER PACKAGE, Fuel ***
					Gas, Carbureted, 20.2 Gallon Tank
	5300 1249	1			1984-85
	5300 3062	1			1986
					Gas, Carbureted, 13.5 Gallon Tank
	5300 1251	1			1984-85
	5300 3064	1			1986
					Diesel, 20.2 Gallon Tank
	5300 1673	1			1984-85
	5300 3066	1			1986
					Diesel, 13.5 Gallon Tank
	5300 1834	1			1984-85
	5300 3068	1			1986
7	5300 1248	1			FILTER, Fuel Gas, Carbureted
8					HARNESS, Fuel Tank
	5600 0762	1			1984-85
	5600 1860	1			1986: Gas Carbureted
	5600 1859	1			1986: Gas Injected
	5600 1860	1			1986: Diesel
9	5200 0128	2			STRAP
10	J324 0023	2			BOLT
11	J012 0930	2			WASHER

MODEL CODES

16=Cherokee 2 Dr.(1981-83)	78=Cherokee 4WD-4 Dr.(1984-86)	64=Comanche 2WD-6 Ft. Box(1986)	25=J-10 Truck 7 Ft. Box(1981-84)
17=Cherokee 2 Dr.(1981-83)	85=CJ-5 (1981-83)	66=Comanche 2WD-7 Ft. Box(1986)	26=J10 Truck 8 Ft. Box(1981-86)
73=Cherokee 2WD-2 Dr.(1984-86)	86=CJ-6(1981)	63=Comanche 4WD-6 Ft. Box(1986)	27=J-20 Truck 8 Ft. Box(1981-86)
74=Cherokee 2WD-4 Dr.(1984-86)	87=CJ-7(1981-86)	65=Comanche 4WD-7 Ft. Box(1986)	15=Wagoneer 4 Dr.(1981-83)
18=Cherokee 4 Dr.(1981-83)	88=CJ-8, Scrambler(1981-86)	15=Grand Wagoneer 4 Dr.(1984-86)	75=Wagoneer 4WD-4 Dr.(1984-86)
77=Cherokee 4WD-2 Dr.(1984-86)			

BODY
CJ=CJ-5, CJ-6, CJ-7, CJ-8, Scrambler(1981-86)
MJ=Comanche Pickup(1986)

STYLES
SJ=Wagoneer(1981-83), Grand Wagoneer(1984-86), Cherokee(1981-83), J-10, J-20(1981-86)
XJ=Wagoneer(1984-86), Cherokee(1984-86)

AR = Use as Required - = Non Illustrated Part P.A.R. = Paint as Required

FUEL TANK 13.5 OR 20.2 GALLON XJ CHEROKEE, XJ WAGONEER
Figure 14-6300

81J14 6300

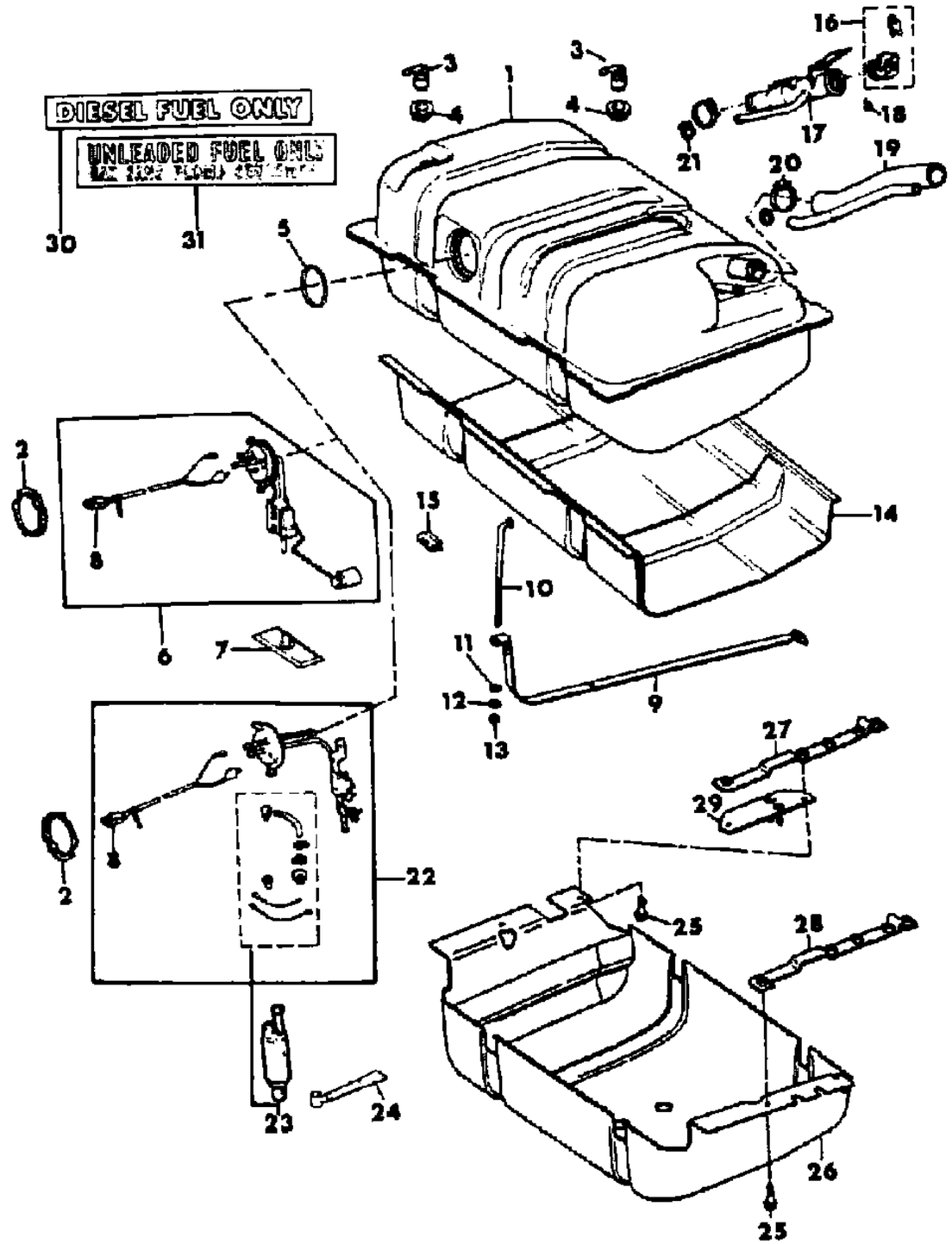

ITEM	PART NUMBER	QTY	BODY	MODEL	DESCRIPTION
12	J400 1104	2			WASHER
13	J012 0377	2			NUT
14	5200 0415	1			SHIELD, Fuel Tank
15	3420 1934	6			CLIP
16					CAP, Fuel Filler
	3300 3052	1			Non-Locking
	8240 0041	1			Locking
17					TUBE, Fuel Filler
					Gas Engine
	5200 0132	1			1984-86: US, CANADA
	5200 0137	1			1984-85: EXPORT
	5200 0137	1			1986: Four Cylinder, Economic Commission of Europe,with Leaded Fuel
	5200 0132	1			1986: Four Cylinder, Economic Commission of Europe, with Unleaded Fuel
	5200 0137	1			1986: Non-Regulated Markets
					Diesel Engine
	5200 0137	1			1984-86
18					SCREW
	3420 1418	2			1984-85
	J400 1701	4			1986
19	5200 0623	1			HOLE ASSY ***
20	J320 3078	2			CLAMP, Hose
21	J320 3077	2			CLAMP, Hose
22					SENDER PACKAGE, Fuel ***
					Gas Injected, Four Cylinder
	8350 2731	1			20.2 Gallon
	8350 2730	1			13.5 Gallon
23					PUMP PACKAGE, Fuel ***
	8350 2751	1			Gas Injected, Four Cylinder
24					FILTER, Fuel
	3300 0184	1			Gas Injected, Four Cylinder
25					BOLT
	3420 1386	4			1984-85
	3420 1964	4			1986
26	5200 1512	1			PLATE, Skid
27	5200 1174	1			REINFORCEMENT, Sill, Right
28	5200 1175	1			REINFORCEMENT, Sill, Left
29	5200 1511	1			BRACKET

MODEL CODES

16=Cherokee 2 Dr.(1981-83)	78=Cherokee 4WD-4 Dr.(1984-86)	64=Comanche 2WD-6 Ft. Box(1986)	25=J-10 Truck 7 Ft. Box(1981-84)
17=Cherokee 2 Dr.(1981-83)	85=CJ-5 (1981-83)	66=Comanche 2WD-7 Ft. Box(1986)	26=J10 Truck 8 Ft. Box(1981-86)
73=Cherokee 2WD-2 Dr.(1984-86)	86=CJ-6(1981)	63=Comanche 4WD-6 Ft. Box(1986)	27=J-20 Truck 8 Ft. Box(1981-86)
74=Cherokee 2WD-4 Dr.(1984-86)	87=CJ-7(1981-86)	65=Comanche 4WD-7 Ft. Box(1986)	15=Wagoneer 4 Dr.(1981-83)
18=Cherokee 4 Dr.(1981-83)	88=CJ-8, Scrambler(1981-86)	15=Grand Wagoneer 4 Dr.(1984-86)	75=Wagoneer 4WD-4 Dr.(1984-86)
77=Cherokee 4WD-2 Dr.(1984-86)			

BODY
CJ=CJ-5, CJ-6, CJ-7, CJ-8, Scrambler(1981-86)
MJ=Comanche Pickup(1986)

STYLES
SJ=Wagoneer(1981-83), Grand Wagoneer(1984-86), Cherokee(1981-83), J-10, J-20(1981-86)
XJ=Wagoneer(1984-86), Cherokee(1984-86)

AR = Use as Required - = Non Illustrated Part P.A.R. = Paint as Required

FUEL TANK 13.5 OR 20.2 GALLON XJ CHEROKEE, XJ WAGONEER
Figure 14-6300

81J14 6300

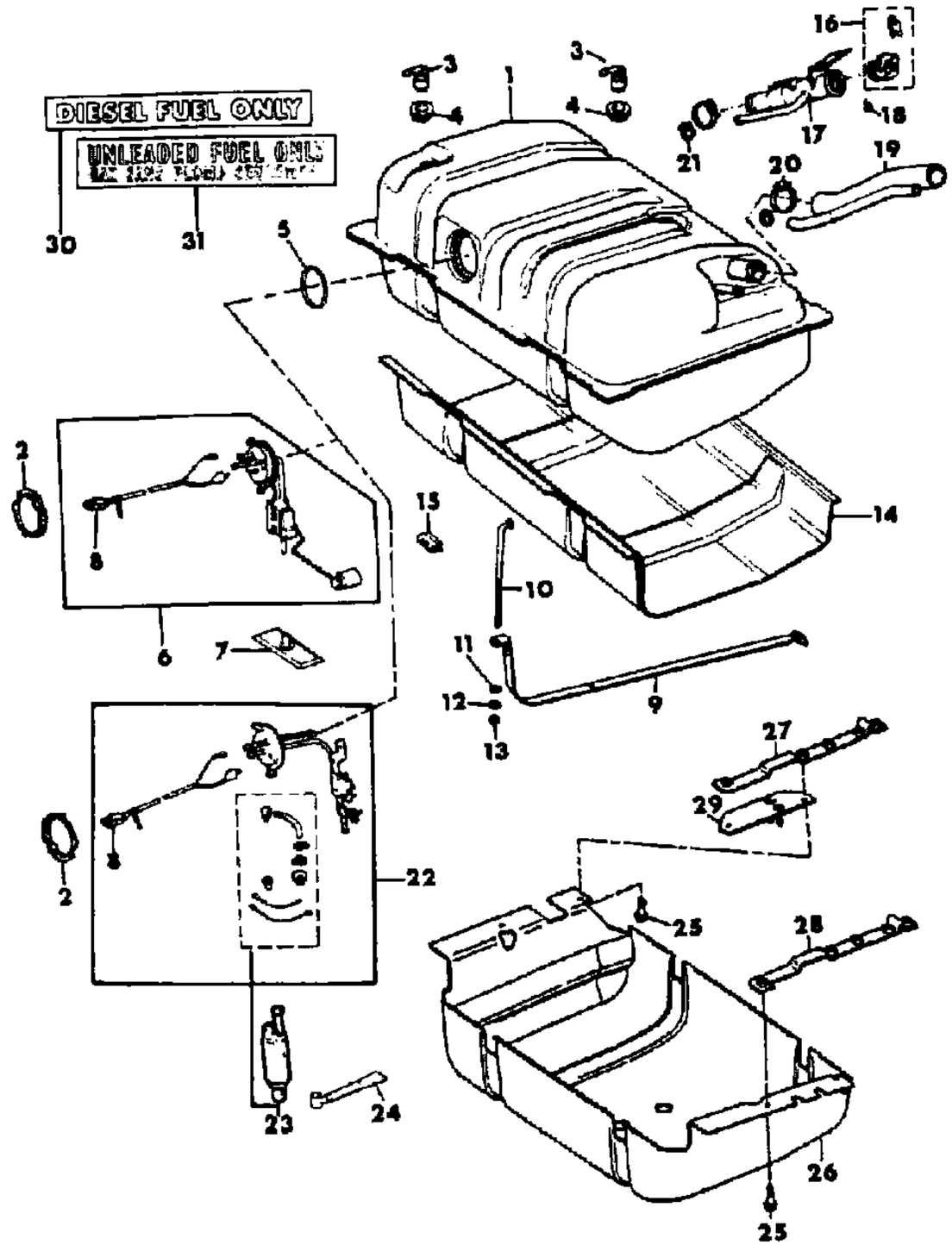

ITEM	PART NUMBER	QTY	BODY	MODEL	DESCRIPTION
30	J546 4900	1			LABEL, Diesel Fuel
31					LABEL, Unleaded Fuel
	J369 6393	1			US
	J369 6394	1			CANADA

MODEL CODES

16=Cherokee 2 Dr.(1981-83)	78=Cherokee 4WD-4 Dr.(1984-86)	64=Comanche 2WD-6 Ft. Box(1986)	25=J-10 Truck 7 Ft. Box(1981-84)
17=Cherokee 2 Dr.(1981-83)	85=CJ-5 (1981-83)	66=Comanche 2WD-7 Ft. Box(1986)	26=J10 Truck 8 Ft. Box(1981-86)
73=Cherokee 2WD-2 Dr.(1984-86)	86=CJ-6(1981)	63=Comanche 4WD-6 Ft. Box(1986)	27=J-20 Truck 8 Ft. Box(1981-86)
74=Cherokee 2WD-4 Dr.(1984-86)	87=CJ-7(1981-86)	65=Comanche 4WD-7 Ft. Box(1986)	15=Wagoneer 4 Dr.(1981-83)
18=Cherokee 4 Dr.(1981-83)	88=CJ-8, Scrambler(1981-86)	15=Grand Wagoneer 4 Dr.(1984-86)	75=Wagoneer 4WD-4 Dr.(1984-86)
77=Cherokee 4WD-2 Dr.(1984-86)			

BODY
CJ=CJ-5, CJ-6, CJ-7, CJ-8, Scrambler(1981-86)
MJ=Comanche Pickup(1986)

STYLES
SJ=Wagoneer(1981-83), Grand Wagoneer(1984-86), Cherokee(1981-83), J-10, J-20(1981-86)
XJ=Wagoneer(1984-86), Cherokee(1984-86)

AR = Use as Required - = Non Illustrated Part P.A.R. = Paint as Required

« RETURN TO GROUP INDEX

FUEL TANK 16 AND 23.5 GALLON COMANCHE
Figure 14-6400

81J14 6400

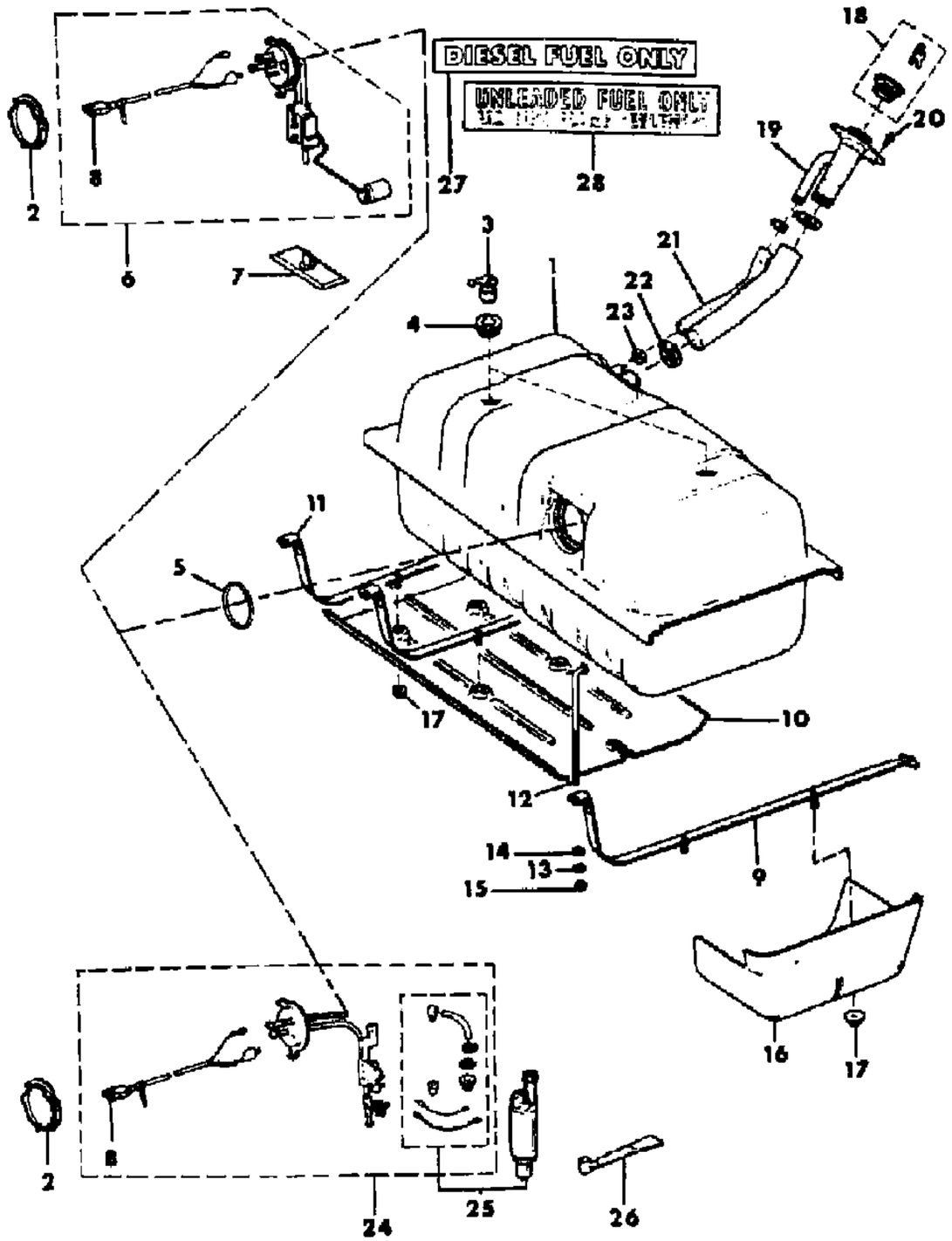

ITEM	PART NUMBER	QTY	BODY	MODEL	DESCRIPTION
1					TANK, Fuel
					Gas, Carbureted
	8350 2635	1			23.5 Gallon
	8350 2635	1			16 Gallon, Also Use 1 of 53002492
					Gas Injected
	8350 2632	1			23.5 Gallon
	8350 2632	1			16 Gallon, Also Use 1 of 83502729
					Diesel
	8350 2635	1			23.5 Gallon
	8350 2635	1			16 Gallon, Also Use 1 of 52003644
2	5300 0584	1			LOCK
3	J536 0058	2			VALVE
4	J536 0059	2			SEAL
5	5300 0575	1			O-RING
6					SENDER PACKAGE, Fuel ***
					Gas, Carbureted
	5300 2492	1			23.5 Gallon
	5300 2490	1			16 Gallon
					Diesel
	5200 3644	1			23.5 Gallon
	5300 2579	1			16 Gallon
7					FILTER, Fuel
	5300 1248	1			Gas, Carbureted
8					HARNESS, Fuel Tank
	5600 1860	1			Gas, Carbureted
	5600 1859	1			Gas, Injected
	5600 1860	1			Diesel
9					STRAP
	5200 1614	2			Without Skid Plate
	5200 1612	2			With Skid Plate
10					EXTENSION, Shield
	5200 2958	1			With 7 Ft. Pickup Box
	5200 2958	1			With 6 Ft. Pickup Box, Modification Required
11					STRAP, Rear
					With 7 Ft. Pickup Box
	5200 2986	1			Without Skid Plate
	5200 1613	1			With Skid Plate
12	5200 1590	AR			BOLT
13	1150 0273	AR			WASHER, Flat

MODEL CODES

16=Cherokee 2 Dr.(1981-83)	78=Cherokee 4WD-4 Dr.(1984-86)	64=Comanche 2WD-6 Ft. Box(1986)	25=J-10 Truck 7 Ft. Box(1981-84)
17=Cherokee 2 Dr.(1981-83)	85=CJ-5 (1981-83)	66=Comanche 2WD-7 Ft. Box(1986)	26=J10 Truck 8 Ft. Box(1981-86)
73=Cherokee 2WD-2 Dr.(1984-86)	86=CJ-6(1981)	63=Comanche 4WD-6 Ft. Box(1986)	27=J-20 Truck 8 Ft. Box(1981-86)
74=Cherokee 2WD-4 Dr.(1984-86)	87=CJ-7(1981-86)	65=Comanche 4WD-7 Ft. Box(1986)	15=Wagoneer 4 Dr.(1981-83)
18=Cherokee 4 Dr.(1981-83)	88=CJ-8, Scrambler(1981-86)	15=Grand Wagoneer 4 Dr.(1984-86)	75=Wagoneer 4WD-4 Dr.(1984-86)
77=Cherokee 4WD-2 Dr.(1984-86)			

BODY
CJ=CJ-5, CJ-6, CJ-7, CJ-8, Scrambler(1981-86)
MJ=Comanche Pickup(1986)

STYLES
SJ=Wagoneer(1981-83), Grand Wagoneer(1984-86), Cherokee(1981-83), J-10, J-20(1981-86)
XJ=Wagoneer(1984-86), Cherokee(1984-86)

AR = Use as Required - = Non Illustrated Part P.A.R. = Paint as Required

« RETURN TO GROUP INDEX »

FUEL TANK 16 AND 23.5 GALLON COMANCHE
Figure 14-6400

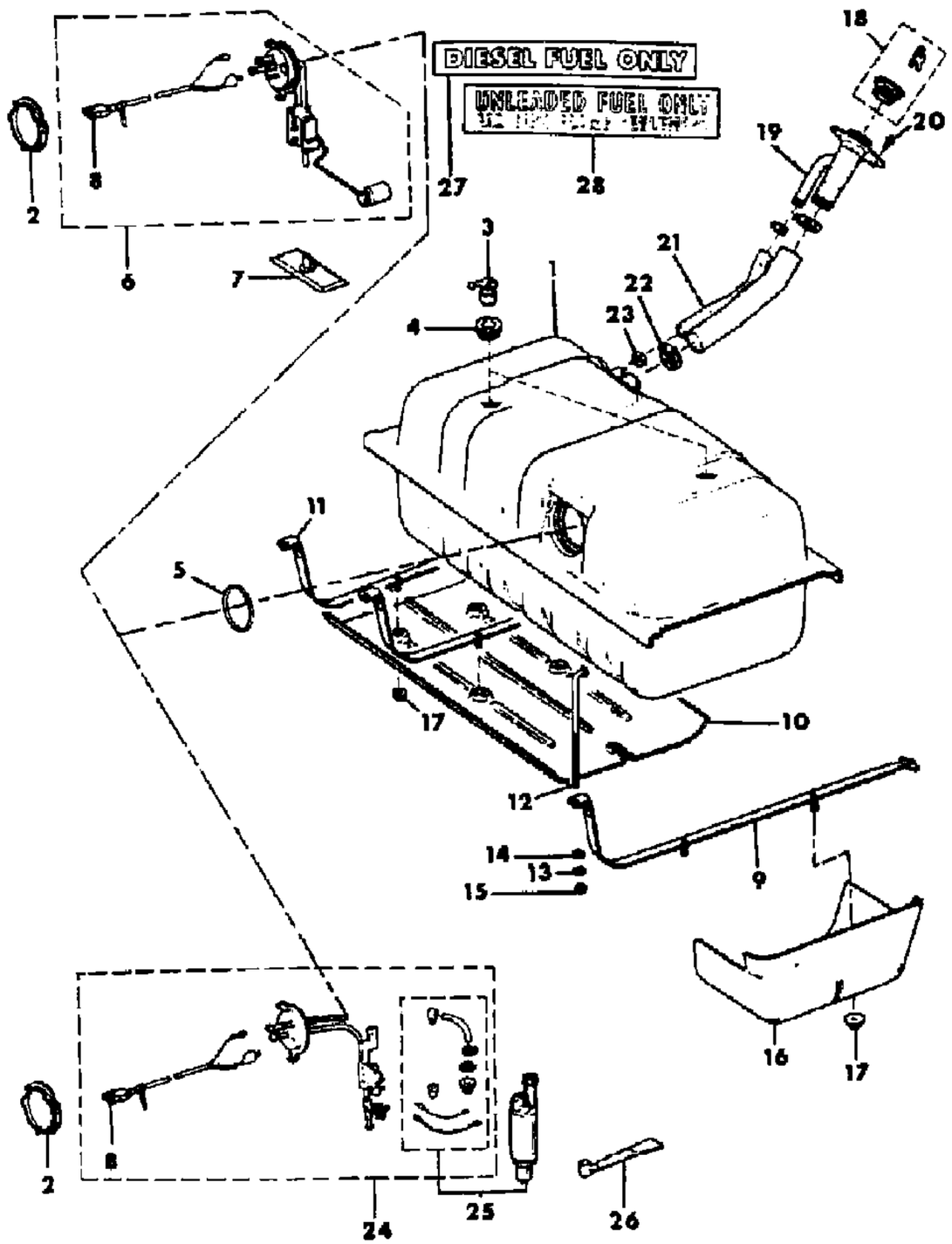

ITEM	PART NUMBER	QTY	BODY	MODEL	DESCRIPTION
14	1150 0222	AR			WASHER, Lock
15	1150 0424	AR			NUT, Hex
16	5200 0951	1			SHIELD, Fuel Tank
17	1150 3745	AR			NUT, Flange
18					CAP, Fuel Filler
	3300 3052	1			Non-Locking
	8240 0041	1			Locking
19					TUBE, Fuel Filler
					Gas
	5200 1814	1			US
	5200 3492	1			CANADA
	5200 1817	1			Non-Regulated Markets
	5200 1817	1			Diesel
20	J400 1701	1			HOSE ASSY ***
21	5200 1595	1			HOSE ASSY ***
22	J320 3078	2			CLAMP, Hose
22	J320 3078	2			CLAMP, Hose
23	J320 3077	2			CLAMP, Hose
24					SENDER PACKAGE, Fuel ***
					Gas, Four Cylinder, Injected, with 7 Ft. Pickup Box
	8350 2729	1			23.5 Gallon
	8350 2728	1			16 Gallon
25					PUMP PACKAGE, Fuel ***
	8350 2752	1			Four Cylinder Gas, Injected
	8350 3634	1			Six Cylinder
26					FILTER, Fuel
	3300 0184	1			Gas, Injected
27	J546 4900	1			LABEL, Diesel Fuel
28					LABEL, Unleaded Fuel
	J369 6393	1			US
	J369 6394	1			CANADA

MODEL CODES

16=Cherokee 2 Dr.(1981-83)
17=Cherokee 2 Dr.(1981-83)
73=Cherokee 2WD-2 Dr.(1984-86)
74=Cherokee 2WD-4 Dr.(1984-86)
18=Cherokee 4 Dr.(1981-83)
77=Cherokee 4WD-2 Dr.(1984-86)
78=Cherokee 4WD-4 Dr.(1984-86)
85=CJ-5 (1981-83)
86=CJ-6(1981)
87=CJ-7(1981-86)
88=CJ-8, Scrambler(1981-86)
64=Comanche 2WD-6 Ft. Box(1986)
66=Comanche 2WD-7 Ft. Box(1986)
63=Comanche 4WD-6 Ft. Box(1986)
65=Comanche 4WD-7 Ft. Box(1986)
15=Grand Wagoneer 4 Dr.(1984-86)
25=J-10 Truck 7 Ft. Box(1981-84)
26=J10 Truck 8 Ft. Box(1981-86)
27=J-20 Truck 8 Ft. Box(1981-86)
15=Wagoneer 4 Dr.(1981-83)
75=Wagoneer 4WD-4 Dr.(1984-86)

BODY
CJ=CJ-5, CJ-6, CJ-7, CJ-8, Scrambler(1981-86)
MJ=Comanche Pickup(1986)

STYLES
SJ=Wagoneer(1981-83), Grand Wagoneer(1984-86), Cherokee(1981-83), J-10, J-20(1981-86)
XJ=Wagoneer(1984-86), Cherokee(1984-86)

AR = Use as Required - = Non Illustrated Part P.A.R. = Paint as Required

« RETURN TO GROUP INDEX

FUEL TANK SKID PLATE COMANCHE
Figure 14-6500

81J14 6500

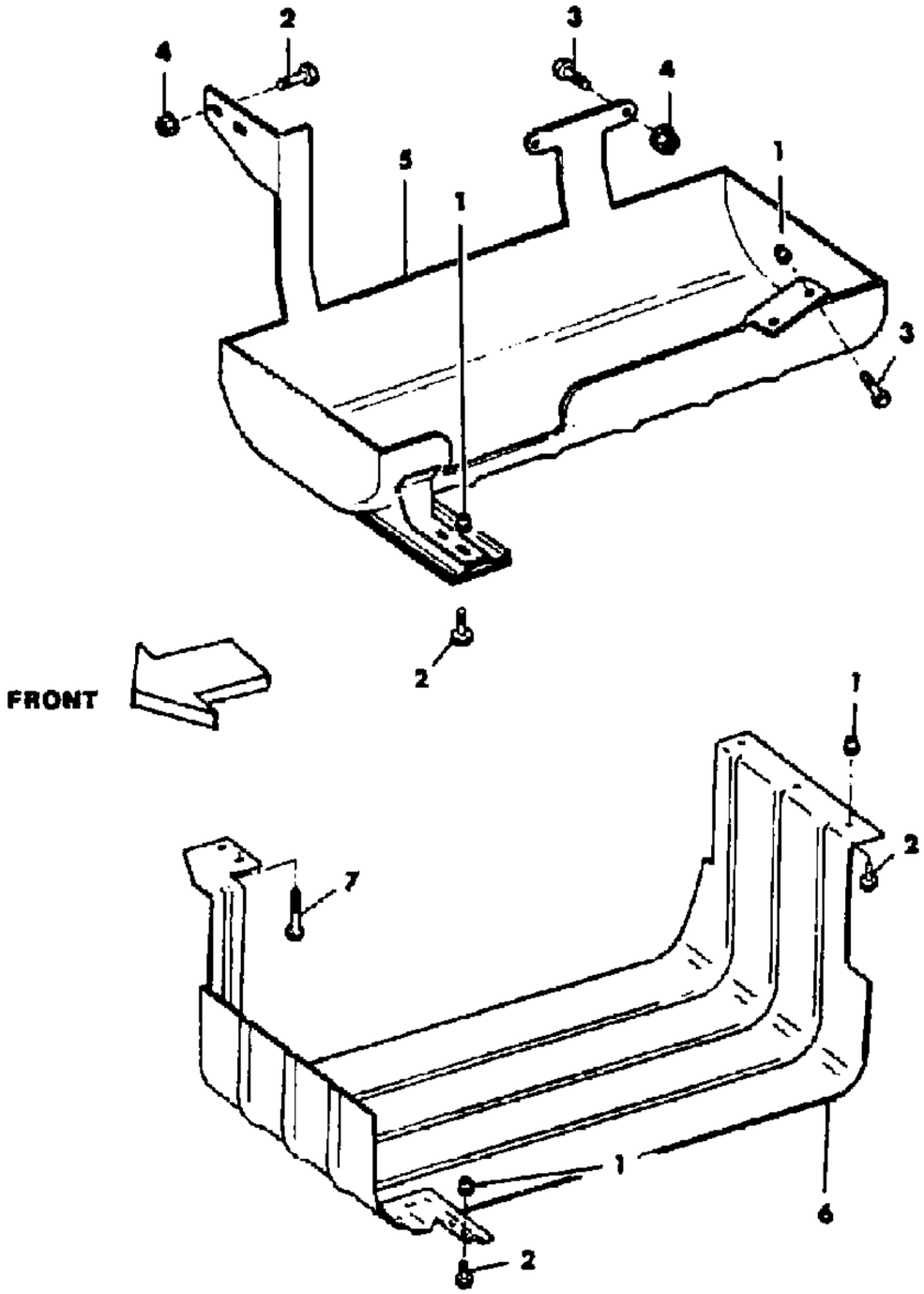

ITEM	PART NUMBER	QTY	BODY	MODEL	DESCRIPTION
1	3420 1575	AR			NUTSERT ***
2	1150 2605	AR			BOLT
3	1150 2850	7			BOLT
4	1150 1889	2			NUT
5					PLATE, Skid
	5200 1806	1			With 7 Ft. Pickup Box
6					PLATE, Skid
	5200 2810	1			With 6 Ft. Pickup Box
7	3420 1559	2			BOLT

MODEL CODES

16=Cherokee 2 Dr.(1981-83)
17=Cherokee 2 Dr.(1981-83)
73=Cherokee 2WD-2 Dr.(1984-86)
74=Cherokee 2WD-4 Dr.(1984-86)
18=Cherokee 4 Dr.(1981-83)
77=Cherokee 4WD-2 Dr.(1984-86)
78=Cherokee 4WD-4 Dr.(1984-86)
85=CJ-5 (1981-83)
86=CJ-6(1981)
87=CJ-7(1981-86)
88=CJ-8, Scrambler(1981-86)
64=Comanche 2WD-6 Ft. Box(1986)
66=Comanche 2WD-7 Ft. Box(1986)
63=Comanche 4WD-6 Ft. Box(1986)
65=Comanche 4WD-7 Ft. Box(1986)
15=Grand Wagoneer 4 Dr.(1984-86)
25=J-10 Truck 7 Ft. Box(1981-84)
26=J10 Truck 8 Ft. Box(1981-86)
27=J-20 Truck 8 Ft. Box(1981-86)
15=Wagoneer 4 Dr.(1981-83)
75=Wagoneer 4WD-4 Dr.(1984-86)

BODY
CJ=CJ-5, CJ-6, CJ-7, CJ-8, Scrambler(1981-86)
MJ=Comanche Pickup(1986)

STYLES
SJ=Wagoneer(1981-83), Grand Wagoneer(1984-86), Cherokee(1981-83), J-10, J-20(1981-86)
XJ=Wagoneer(1984-86), Cherokee(1984-86)

AR = Use as Required - = Non Illustrated Part P.A.R. = Paint as Required

« RETURN TO GROUP INDEX

AIR CLEANER SIX CYLINDER, STANDARD DUTY SJ CHEROKEE, SJ WAGONEER, J10, J20
Figure 14-6600

81J14 6600

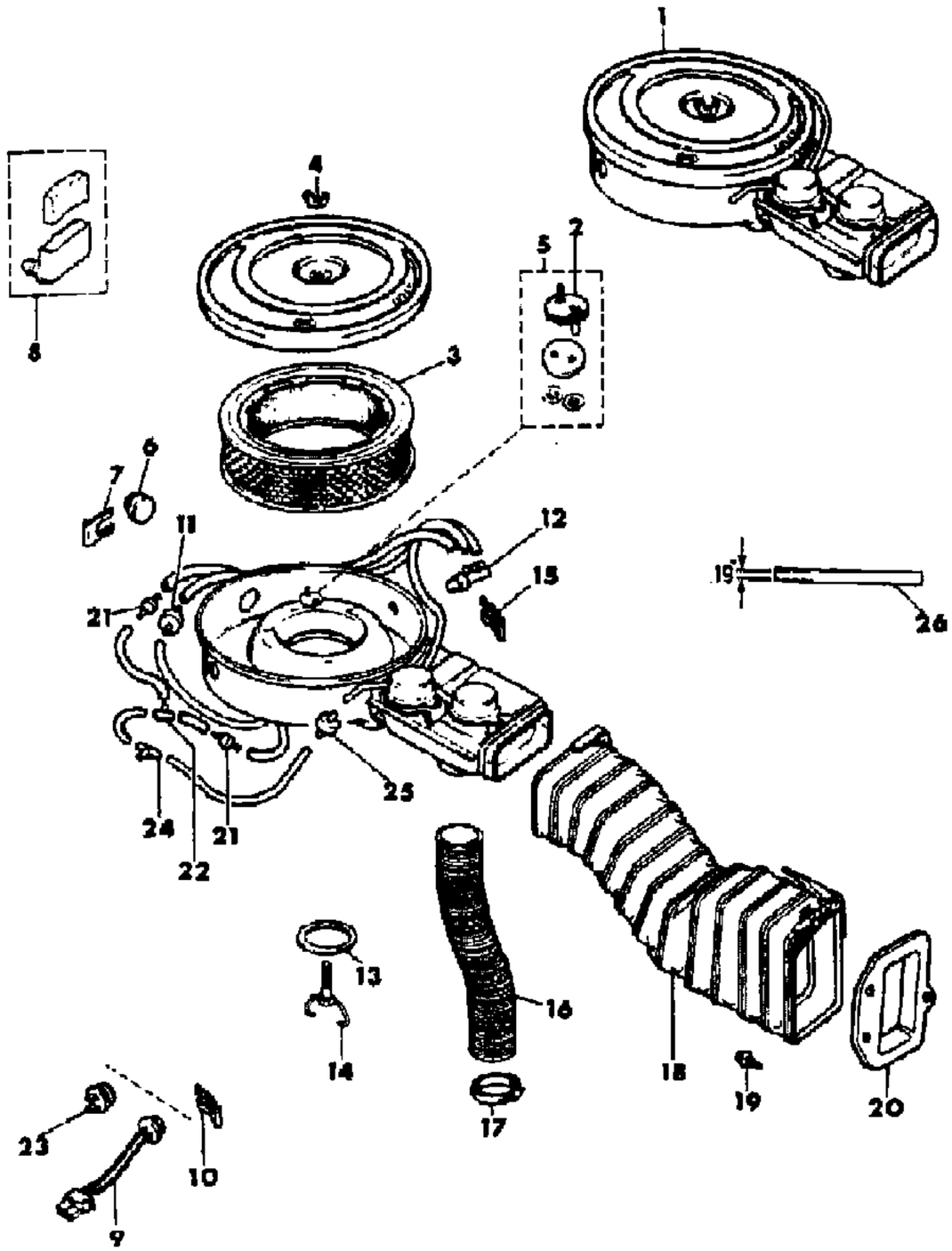

ITEM	PART NUMBER	QTY	BODY	MODEL	DESCRIPTION
1					AIR CLEANER
	J323 8106	1			1981: US 49-States, with Manual Transmission
	J323 8107	1			1981: US California, with Manual Transmission
	J324 1328	1			1981: CANADA
	J323 8106	1			1981-82: US, with Automatic Transmission
	J324 1328	1			1981-82: Australian Design Rules, Economic Commission of Europe, Non-Regulated Markets
	J323 8106	1			1982: CANADA
	J324 1328	1			1982-85: Australian Design Rules, Economic Commission of Europe
	5300 0657	1			1983: CANADA
	5300 0441	1			1983-85: US
	J805 1773	1			1983-86: Non-Regulated Markets
	3300 2081	1			1984-85: CANADA
	J324 1328	1			1984-85: Without Heater, Australian Design Rules, with Manual Transmission
	J805 1773	1		15,16,1	1985: Without Heater, Australian Design Rules, with Automatic Transmission
	3300 2064	1			1986: US
	3300 2065	1			1986: CANADA
2					SENSOR
	5300 2950	1			1982-86: Non-Regulated Markets
	5300 2950	1		15,16,1	1985: Without Heater, Australian Design Rules, with Automatic Transmission
3	J899 1386	1			ELEMENT, Air Cleaner
4	J323 7735	1			NUT, Wing
5					SENSOR PACKAGE
	J812 8338	1			1981: Non-Regulated Markets
	J812 8338	1			1981-86: US, CANADA
	J812 8338	1			1981-85: Australian Design Rules, Economic Commission of Europe
6	J323 5329	1			SWITCH, Vacuum
7	J400 6334	1			CLIP
8	J323 6695	1			FILTER PACKAGE
9					SWITCH, Thermal Electric
	3300 0630	1			US, CANADA
10	J400 6784	1			CLIP
11					VALVE, Reverse Delay
	J323 7141	1			1981-82: US, CANADA

MODEL CODES

16=Cherokee 2 Dr.(1981-83)	78=Cherokee 4WD-4 Dr.(1984-86)	64=Comanche 2WD-6 Ft. Box(1986)	25=J-10 Truck 7 Ft. Box(1981-84)
17=Cherokee 2 Dr.(1981-83)	85=CJ-5 (1981-83)	66=Comanche 2WD-7 Ft. Box(1986)	26=J10 Truck 8 Ft. Box(1981-86)
73=Cherokee 2WD-2 Dr.(1984-86)	86=CJ-6(1981)	63=Comanche 4WD-6 Ft. Box(1986)	27=J-20 Truck 8 Ft. Box(1981-86)
74=Cherokee 2WD-4 Dr.(1984-86)	87=CJ-7(1981-86)	65=Comanche 4WD-7 Ft. Box(1986)	15=Wagoneer 4 Dr.(1981-83)
18=Cherokee 4 Dr.(1981-83)	88=CJ-8, Scrambler(1981-86)	15=Grand Wagoneer 4 Dr.(1984-86)	75=Wagoneer 4WD-4 Dr.(1984-86)
77=Cherokee 4WD-2 Dr.(1984-86)			

BODY
CJ=CJ-5, CJ-6, CJ-7, CJ-8, Scrambler(1981-86)
MJ=Comanche Pickup(1986)

STYLES
SJ=Wagoneer(1981-83), Grand Wagoneer(1984-86), Cherokee(1981-83), J-10, J-20(1981-86)
XJ=Wagoneer(1984-86), Cherokee(1984-86)

AR = Use as Required - = Non Illustrated Part P.A.R. = Paint as Required

AIR CLEANER SIX CYLINDER, STANDARD DUTY SJ CHEROKEE, SJ WAGONEER, J10, J20
Figure 14-6600

81J14 6600

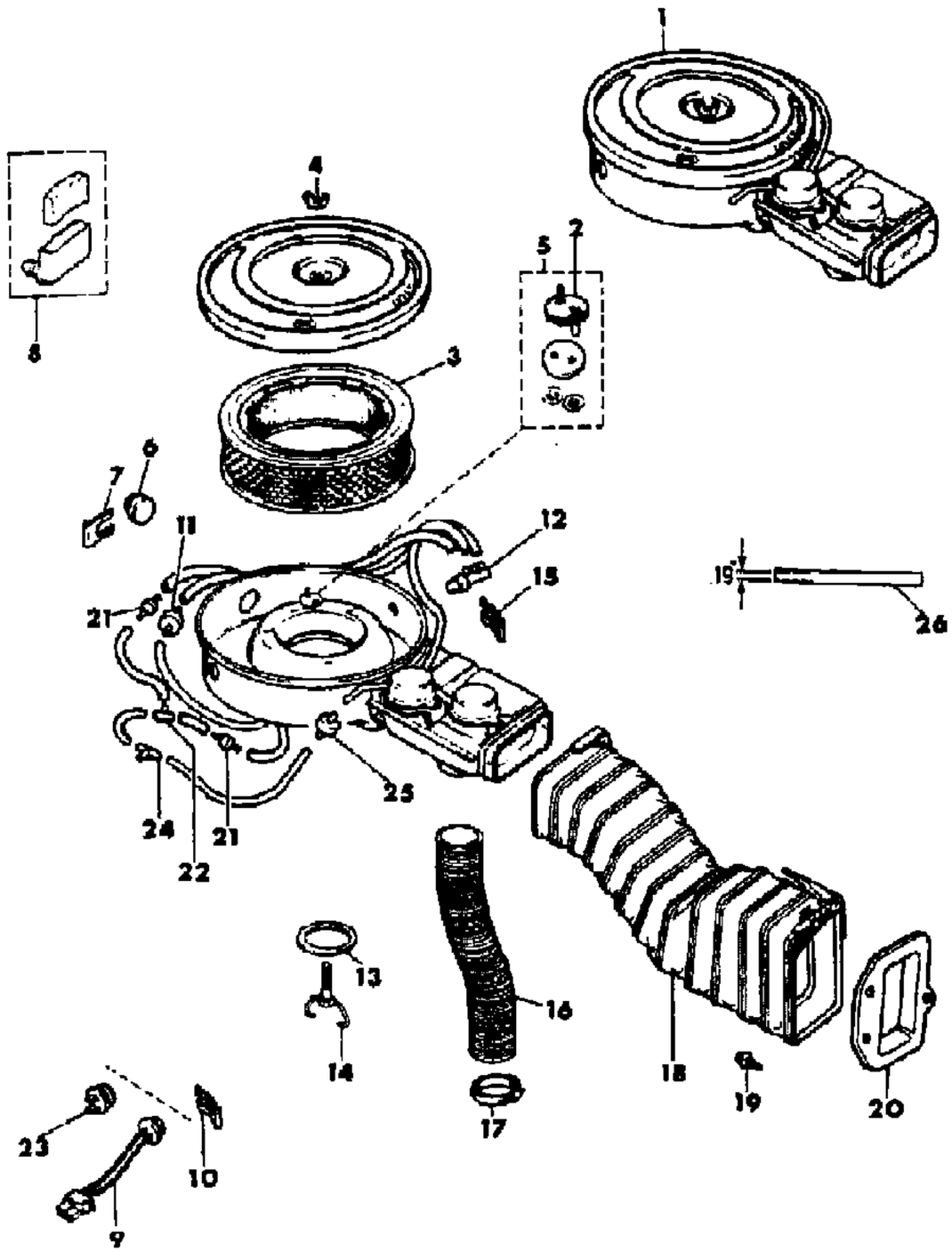

ITEM	PART NUMBER	QTY	BODY	MODEL	DESCRIPTION
	J323 5938	1			1983-86: US, CANADA
	J323 7141	1			Australian Design Rules, Economic Commission of Europe, Non-Regulated Markets
12	J323 7457	1			SWITCH, Thermal Vacuum
13	3300 1475	1			GASKET
14	J323 1263	1			BAIL, Air Cleaner Retaining ***
15	J400 6571	1			CLIP
16	3300 3391	1			TUBE, Hot Air
17	J320 3079	1			CLAMP, Hose
18	J535 7886	1			TUBE, Air Intake
19	J942 1073	3			SCREW
20	J546 3866	1			ADAPTER, Air Intake
21	J322 8426	2			VALVE, Check
22	J321 0891	1			CONNECTOR, Tee
23					SWITCH, Thermal Electric
	J324 0149	1			1981-82: US
	J324 0149	1			1982: CANADA
24					CONNECTOR, Tee
	8310 0020	1			1982: CANADA
	8310 0020	1			US
25					VALVE, Reverse Delay
	J323 7141	1			US
26	J812 5812	AR			HOSE, Bulk

MODEL CODES

16=Cherokee 2 Dr.(1981-83)	78=Cherokee 4WD-4 Dr.(1984-86)	64=Comanche 2WD-6 Ft. Box(1986)	25=J-10 Truck 7 Ft. Box(1981-84)
17=Cherokee 2 Dr.(1981-83)	85=CJ-5 (1981-83)	66=Comanche 2WD-7 Ft. Box(1986)	26=J10 Truck 8 Ft. Box(1981-86)
73=Cherokee 2WD-2 Dr.(1984-86)	86=CJ-6(1981)	63=Comanche 4WD-6 Ft. Box(1986)	27=J-20 Truck 8 Ft. Box(1981-86)
74=Cherokee 2WD-4 Dr.(1984-86)	87=CJ-7(1981-86)	65=Comanche 4WD-7 Ft. Box(1986)	15=Wagoneer 4 Dr.(1981-83)
18=Cherokee 4 Dr.(1981-83)	88=CJ-8, Scrambler(1981-86)	15=Grand Wagoneer 4 Dr.(1984-86)	75=Wagoneer 4WD-4 Dr.(1984-86)
77=Cherokee 4WD-2 Dr.(1984-86)			

BODY
CJ=CJ-5, CJ-6, CJ-7, CJ-8, Scrambler(1981-86)
MJ=Comanche Pickup(1986)

STYLES
SJ=Wagoneer(1981-83), Grand Wagoneer(1984-86), Cherokee(1981-83), J-10, J-20(1981-86)
XJ=Wagoneer(1984-86), Cherokee(1984-86)

AR = Use as Required - = Non Illustrated Part P.A.R. = Paint as Required

« RETURN TO GROUP INDEX

AIR CLEANER SIX CYLINDER, HEAVY DUTY SJ CHEROKEE, SJ WAGONEER, J10, J20
Figure 14-6700

81J14 6700

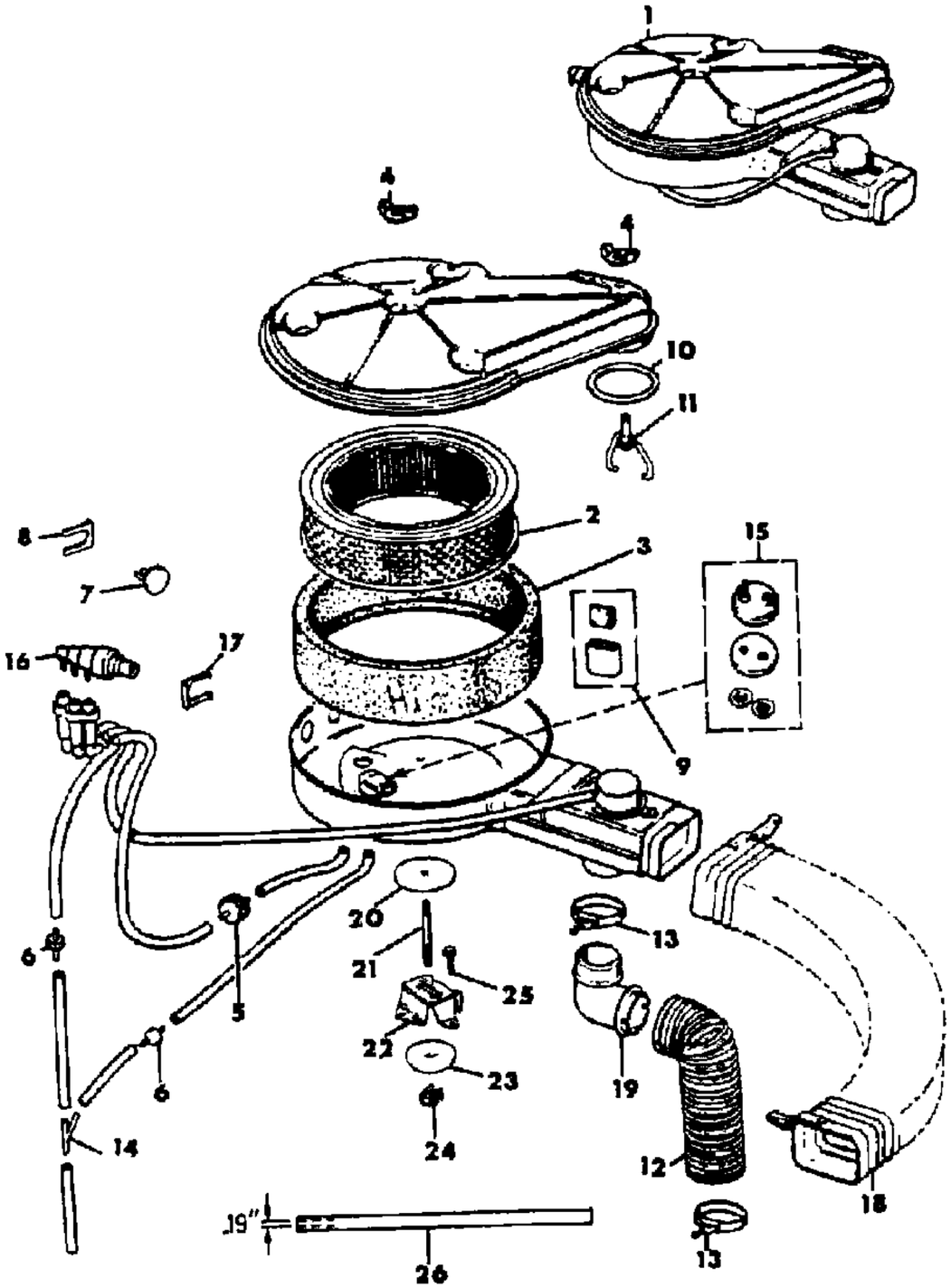

ITEM	PART NUMBER	QTY	BODY	MODEL	DESCRIPTION
1					AIR CLEANER
	J805 1192	1			1982-85: Australian Design Rules, Economic Commission of Europe
	J805 1774	1			1983-85: Non-Regulated Markets
	J805 1774	1			1985: With Heater, Australian Design Rules, with Automatic Transmission
2	J899 1386	1			ELEMENT, Air Cleaner
3	J805 1181	1			SLEEVE
4	J315 1735	2			NUT
5	J323 7141	1			VALVE, Reverse Delay
6	J322 8426	2			VALVE, Check
7	J323 5329	1			SWITCH, Vacuum
8	J400 6334	1			CLIP
9	J323 6695	1			FILTER PACKAGE
10	3300 1475	1			GASKET
11	J323 1263	1			BAIL, Air Cleaner Retaining ***
12	3300 3391	1			TUBE, Hot Air
13	J320 3079	3			CLAMP, Hose
14	J321 0891	1			CONNECTOR, Tee
15	J812 8338	1			SENSOR PACKAGE
16	J323 7457	1			SWITCH, Thermal Vacuum
17	J400 6571	1			CLIP
18	J535 8444	1			TUBE, Air Intake
19	J323 2439	1			ELBOW
20	J323 4485	1			GASKET
21	J400 5759	1			STUD
22	J323 9648	1			BRACKET, Mounting
23	J324 1389	1			SLIDER ***
24	J400 1946	1			NUT, Cage
25	J400 6719	3			SCREW
26	J812 5812	AR			HOSE, Bulk

MODEL CODES
16=Cherokee 2 Dr.(1981-83)
17=Cherokee 2 Dr.(1981-83)
73=Cherokee 2WD-2 Dr.(1984-86)
74=Cherokee 2WD-4 Dr.(1984-86)
18=Cherokee 4 Dr.(1981-83)
77=Cherokee 4WD-2 Dr.(1984-86)
78=Cherokee 4WD-4 Dr.(1984-86)
85=CJ-5 (1981-83)
86=CJ-6(1981)
87=CJ-7(1981-86)
88=CJ-8, Scrambler(1981-86)
64=Comanche 2WD-6 Ft. Box(1986)
66=Comanche 2WD-7 Ft. Box(1986)
63=Comanche 4WD-6 Ft. Box(1986)
65=Comanche 4WD-7 Ft. Box(1986)
15=Grand Wagoneer 4 Dr.(1984-86)
25=J-10 Truck 7 Ft. Box(1981-84)
26=J10 Truck 8 Ft. Box(1981-86)
27=J-20 Truck 8 Ft. Box(1981-86)
15=Wagoneer 4 Dr.(1981-83)
75=Wagoneer 4WD-4 Dr.(1984-86)

BODY
CJ=CJ-5, CJ-6, CJ-7, CJ-8, Scrambler(1981-86)
MJ=Comanche Pickup(1986)

STYLES
SJ=Wagoneer(1981-83), Grand Wagoneer(1984-86), Cherokee(1981-83), J-10, J-20(1981-86)
XJ=Wagoneer(1984-86), Cherokee(1984-86)

AR = Use as Required - = Non Illustrated Part P.A.R. = Paint as Required

« RETURN TO GROUP INDEX

AIR CLEANER SIX CYLINDER, SEVERE USE SJ CHEROKEE, SJ WAGONEER, J10, J20
Figure 14-6800

81J14 6800

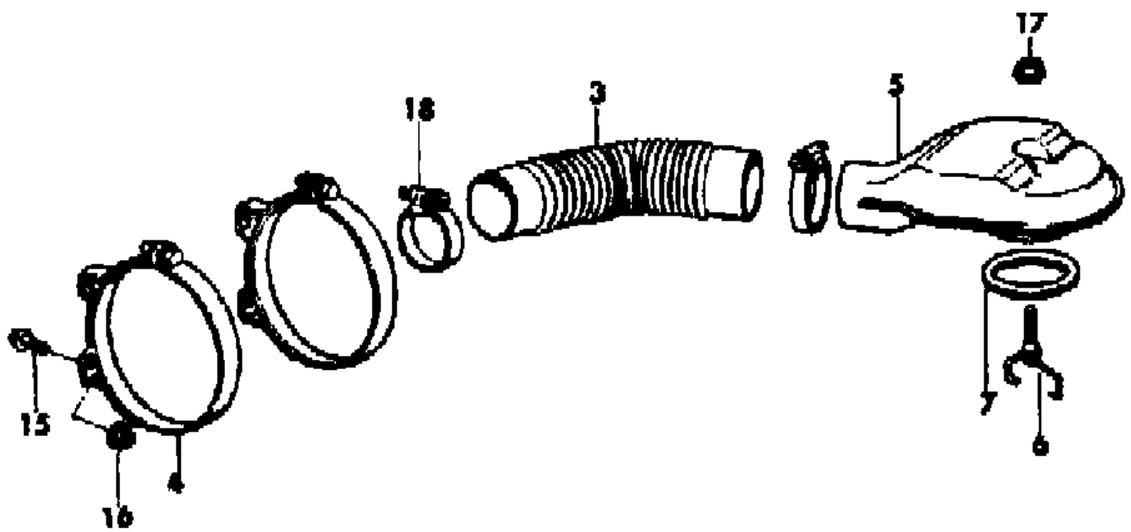

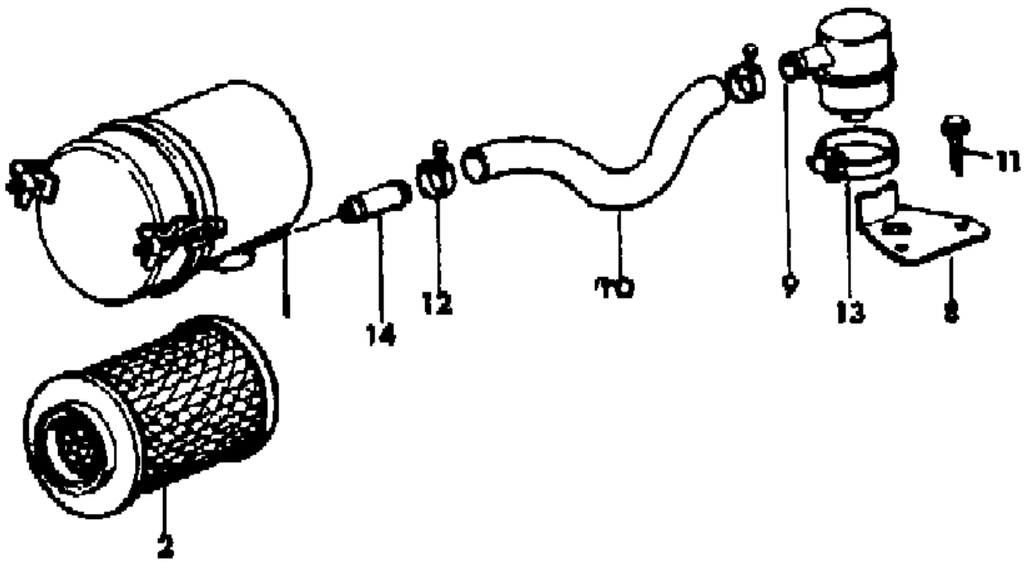

ITEM	PART NUMBER	QTY	BODY	MODEL	DESCRIPTION
1	J805 3022	1			AIR CLEANER
2	J805 3262	1			ELEMENT, Air Cleaner
3	9200 0001	1			TUBE, Air Intake
4	J805 1363	2			BRACKET, Mounting
5	J805 1373	1			ADAPTER, Air Intake
6	J323 1263	1			BAIL, Air Cleaner Retaining ***
7	3300 1475	1			GASKET
8	J805 3013	1			BRACKET, Mounting
9	J805 3174	1			BREATHER, Crankcase ***
10	J320 3739	AR			HOSE, Bulk
11	J400 6719	2			SCREW
12	J320 3076	1			CLAMP, Hose
13	J320 3079	1			CLAMP, Hose
14	9200 0015	1			TUBE
15	J400 3872	4			SCREW
16	J400 6725	4			NUT
17	J400 4469	1			NUT
18	J400 6643	2			CLAMP, Hose

MODEL CODES
16=Cherokee 2 Dr.(1981-83)
17=Cherokee 2 Dr.(1981-83)
73=Cherokee 2WD-2 Dr.(1984-86)
74=Cherokee 2WD-4 Dr.(1984-86)
18=Cherokee 4 Dr.(1981-83)
77=Cherokee 4WD-2 Dr.(1984-86)
78=Cherokee 4WD-4 Dr.(1984-86)
85=CJ-5 (1981-83)
86=CJ-6(1981)
87=CJ-7(1981-86)
88=CJ-8, Scrambler(1981-86)
64=Comanche 2WD-6 Ft. Box(1986)
66=Comanche 2WD-7 Ft. Box(1986)
63=Comanche 4WD-6 Ft. Box(1986)
65=Comanche 4WD-7 Ft. Box(1986)
15=Grand Wagoneer 4 Dr.(1984-86)
25=J-10 Truck 7 Ft. Box(1981-84)
26=J10 Truck 8 Ft. Box(1981-86)
27=J-20 Truck 8 Ft. Box(1981-86)
15=Wagoneer 4 Dr.(1981-83)
75=Wagoneer 4WD-4 Dr.(1984-86)

BODY
CJ=CJ-5, CJ-6, CJ-7, CJ-8, Scrambler(1981-86)
MJ=Comanche Pickup(1986)

STYLES
SJ=Wagoneer(1981-83), Grand Wagoneer(1984-86), Cherokee(1981-83), J-10, J-20(1981-86)
XJ=Wagoneer(1984-86), Cherokee(1984-86)

AR = Use as Required - = Non Illustrated Part P.A.R. = Paint as Required

« RETURN TO GROUP INDEX

AIR CLEANER EIGHT CYLINDER SJ CHEROKEE, SJ WAGONEER, J10, J20
Figure 14-6900

81J14 6900

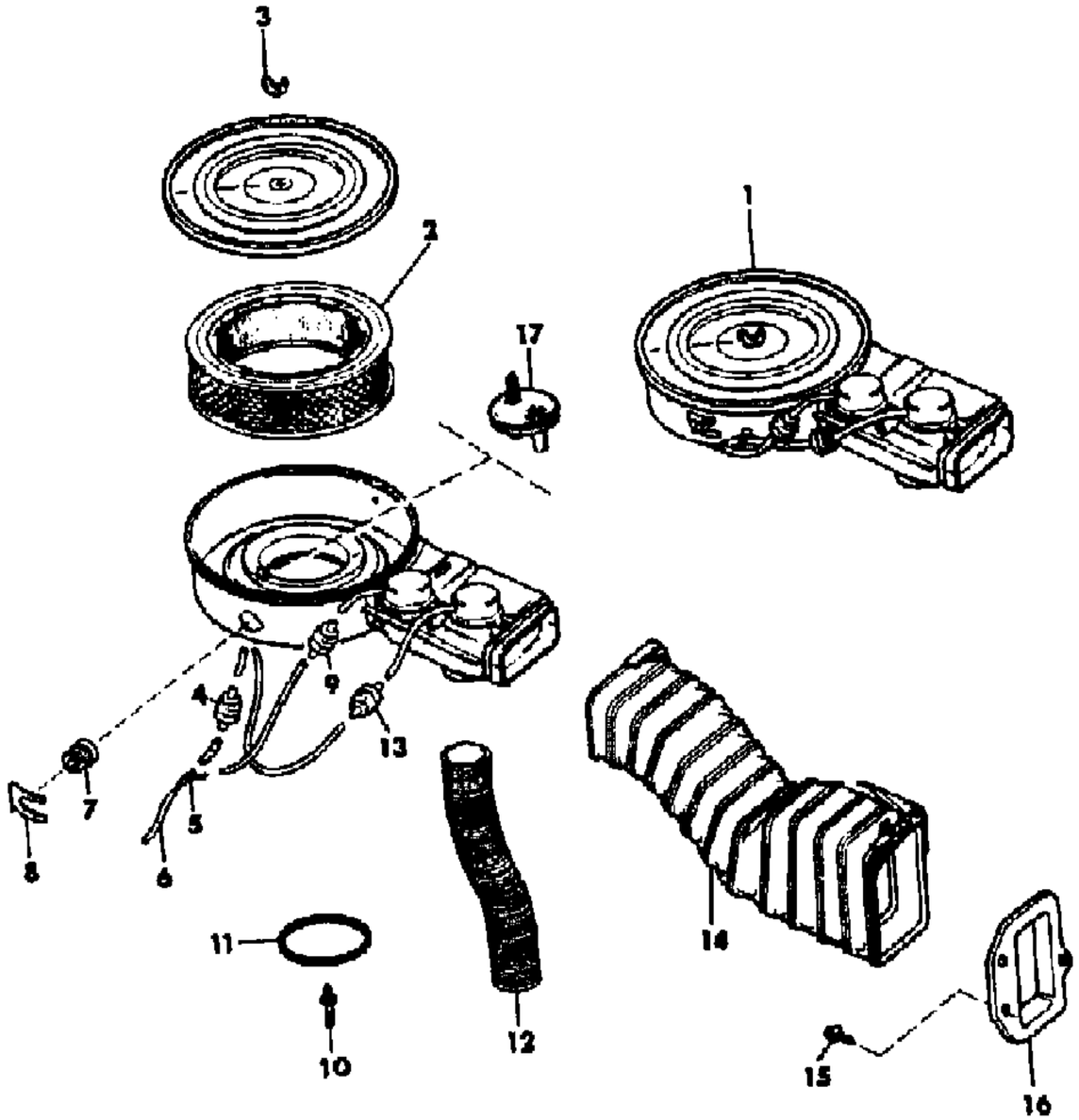

ITEM	PART NUMBER	QTY	BODY	MODEL	DESCRIPTION
1					AIR CLEANER
	J323 8103	1			1981-83: US-49 States
	J323 8103	1		27	1981-83: CANADA, With Automatic Transmission
	J324 0215	1			1981-83: CANADA, Without Model 27
	J324 0215	1			1981-85: Australian Design Rules, Economic Commission of Europe, Non-Regulated Markets
	3300 1989	1			1984-85: US
	3300 1989	1		27	1984-85: CANADA
	3300 2018	1			1984-85: CANADA, Without Model 27
	5300 3936	1			1986: US
	5300 3936	1		27	1986: CANADA
	5300 3937	1			1986: CANADA, Without Model 27
	5300 3937	1			1986: Non-Regulated Markets
2	J899 2661	1			ELEMENT, Air Cleaner
3	J315 1735	1			NUT
4	J322 8426	1			VALVE, Check
5					CONNECTOR, Tee
	J321 0891	1			US, CANADA
6	J812 5812	AR			HOSE, Bulk
7	J323 5329	1			SWITCH, Vacuum
8	J400 6334	1			CLIP, Retaining
9					VALVE, Reverse Delay
	J323 7141	1			US, CANADA
10	J323 0269	1			STUD
11	J319 1884	1			GASKET
12	3300 3391	1			TUBE, Hot Air
13					VALVE, Reverse Delay
	J323 7141	1			1981-83: US, CANADA
	J323 5938	1			1984-86: US, CANADA
14	J535 8444	1			TUBE, Air Intake
15	J942 1073	3			SCREW
16	J546 3866	3			ADAPTER, Air Intake
17	5300 3940	1			SENSOR, Intake Air Temp

MODEL CODES

16=Cherokee 2 Dr.(1981-83)
17=Cherokee 2 Dr.(1981-83)
73=Cherokee 2WD-2 Dr.(1984-86)
74=Cherokee 2WD-4 Dr.(1984-86)
18=Cherokee 4 Dr.(1981-83)
77=Cherokee 4WD-2 Dr.(1984-86)
78=Cherokee 4WD-4 Dr.(1984-86)
85=CJ-5 (1981-83)
86=CJ-6(1981)
87=CJ-7(1981-86)
88=CJ-8, Scrambler(1981-86)
64=Comanche 2WD-6 Ft. Box(1986)
66=Comanche 2WD-7 Ft. Box(1986)
63=Comanche 4WD-6 Ft. Box(1986)
65=Comanche 4WD-7 Ft. Box(1986)
15=Grand Wagoneer 4 Dr.(1984-86)
25=J-10 Truck 7 Ft. Box(1981-84)
26=J10 Truck 8 Ft. Box(1981-86)
27=J-20 Truck 8 Ft. Box(1981-86)
15=Wagoneer 4 Dr.(1981-83)
75=Wagoneer 4WD-4 Dr.(1984-86)

BODY
CJ=CJ-5, CJ-6, CJ-7, CJ-8, Scrambler(1981-86)
MJ=Comanche Pickup(1986)

STYLES
SJ=Wagoneer(1981-83), Grand Wagoneer(1984-86), Cherokee(1981-83), J-10, J-20(1981-86)
XJ=Wagoneer(1984-86), Cherokee(1984-86)

AR = Use as Required - = Non Illustrated Part P.A.R. = Paint as Required

« RETURN TO GROUP INDEX

CARBURETOR AND COMPONENT PARTS SIX CYLINDER SJ CHEROKEE, SJ WAGONEER, J10, J20
Figure 14-7000

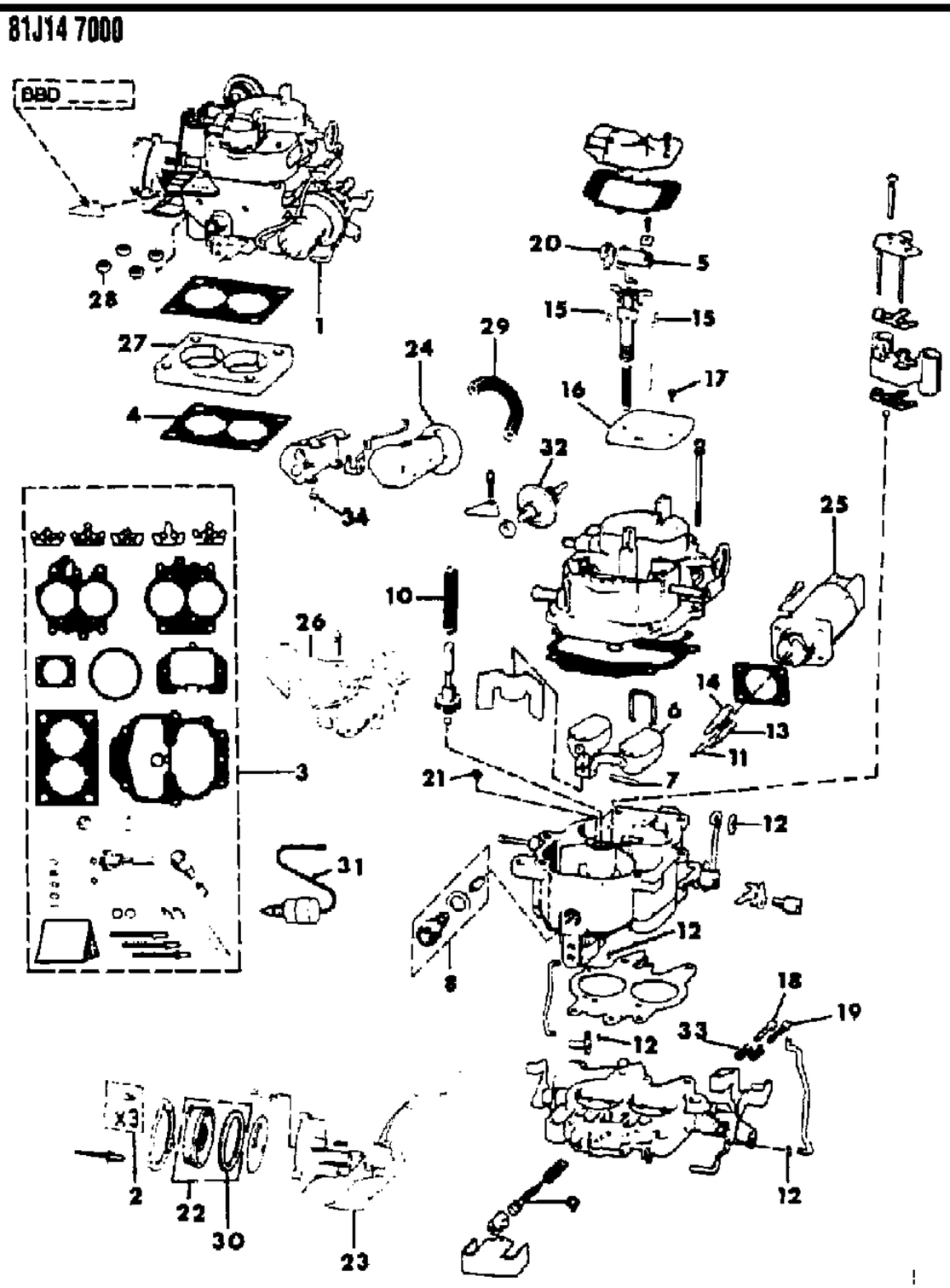

ITEM	PART NUMBER	QTY	BODY	MODEL	DESCRIPTION
1					CARBURETOR
	J323 8404	1			1981: Without US California, Tagged 8312S
	J323 8406	1			1981: US California, with Manual Transmission, Tagged 8307S
	J323 8405	1		15,16,1	1981: US California, with Automatic Transmission, Tagged 8306S
	J324 0307	1			1981: CANADA, Tagged 8337
	J324 0307	1		16,17,1	1981: EXPORT, Australian Design Rules, with Manual Transmission, Tagged 8337
	J324 0307	1			EXPORT, Economic Commission of Europe, Non-Regulated Markets, without Model 27, Tagged 8337
	J323 5767	1			EXPORT, Non-Regulated Markets, with Hydramatic Transmission, Tagged 8255S
	J323 6631	1			1981: EXPORT, Non-Regulated Markets, with Automatic Transmission, without Model 27, Tagged 8284S
	J324 1128	1			1982: With Manual Transmission, Tagged 8341S
	J324 1127	1			1982: With Automatic Transmission, Tagged 8340S
	J324 2067	1		16,17,1	1982: EXPORT, Australian Design Rules, Economic Commission of Europe, Non-Regulated Markets, Tagged 8355S
	J805 1769	1			1982-84: EXPORT, Australian Design Rules, Economic Commission of Europe, Non-Regulated Markets, VAM, Built in Mexico, Engine Build Code "M", Tagged 8372S
	3300 0483	1			1983: Without US California, with CANADA, with Manual Transmission, Tagged 8367S
	3300 0482	1			1983: Without US California, with Automatic Transmission, Tagged 8362S
	3300 0469	1			1983: US California, with Manual Transmission, Tagged 8364S
	3300 0468	1			1983: US California, with Automatic Transmission, Tagged 8360S
	J324 2067	1			1983-85: EXPORT, Economic Commission of Europe, without Model 27, Tagged 8355S
	J324 2067	1		15,17,1	1983-85: EXPORT, Australian Design Rules, with Manual Transmission, Tagged 8355S
	3300 0486	1			1983-86: EXPORT, Non-Regulated Markets, Tagged 8366S
	3300 1708	1			1984-86: With Manual Transmission, Tagged 8384S
	3300 1707	1			1984-86: With Automatic Transmission, Tagged 8383S
2	J813 3749	1			SCREW PACKAGE
3					REPAIR PACKAGE, Carburetor

MODEL CODES

16=Cherokee 2 Dr.(1981-83)
17=Cherokee 2 Dr.(1981-83)
73=Cherokee 2WD-2 Dr.(1984-86)
74=Cherokee 2WD-4 Dr.(1984-86)
18=Cherokee 4 Dr.(1981-83)
77=Cherokee 4WD-2 Dr.(1984-86)
78=Cherokee 4WD-4 Dr.(1984-86)
85=CJ-5 (1981-83)
86=CJ-6(1981)
87=CJ-7(1981-86)
88=CJ-8, Scrambler(1981-86)
64=Comanche 2WD-6 Ft. Box(1986)
66=Comanche 2WD-7 Ft. Box(1986)
63=Comanche 4WD-6 Ft. Box(1986)
65=Comanche 4WD-7 Ft. Box(1986)
15=Grand Wagoneer 4 Dr.(1984-86)
25=J-10 Truck 7 Ft. Box(1981-84)
26=J10 Truck 8 Ft. Box(1981-86)
27=J-20 Truck 8 Ft. Box(1981-86)
15=Wagoneer 4 Dr.(1981-83)
75=Wagoneer 4WD-4 Dr.(1984-86)

BODY
CJ=CJ-5, CJ-6, CJ-7, CJ-8, Scrambler(1981-86)
MJ=Comanche Pickup(1986)

STYLES
SJ=Wagoneer(1981-83), Grand Wagoneer(1984-86), Cherokee(1981-83), J-10, J-20(1981-86)
XJ=Wagoneer(1984-86), Cherokee(1984-86)

AR = Use as Required - = Non Illustrated Part P.A.R. = Paint as Required

« RETURN TO GROUP INDEX »

CARBURETOR AND COMPONENT PARTS SIX CYLINDER SJ CHEROKEE, SJ WAGONEER, J10, J20
Figure 14-7000

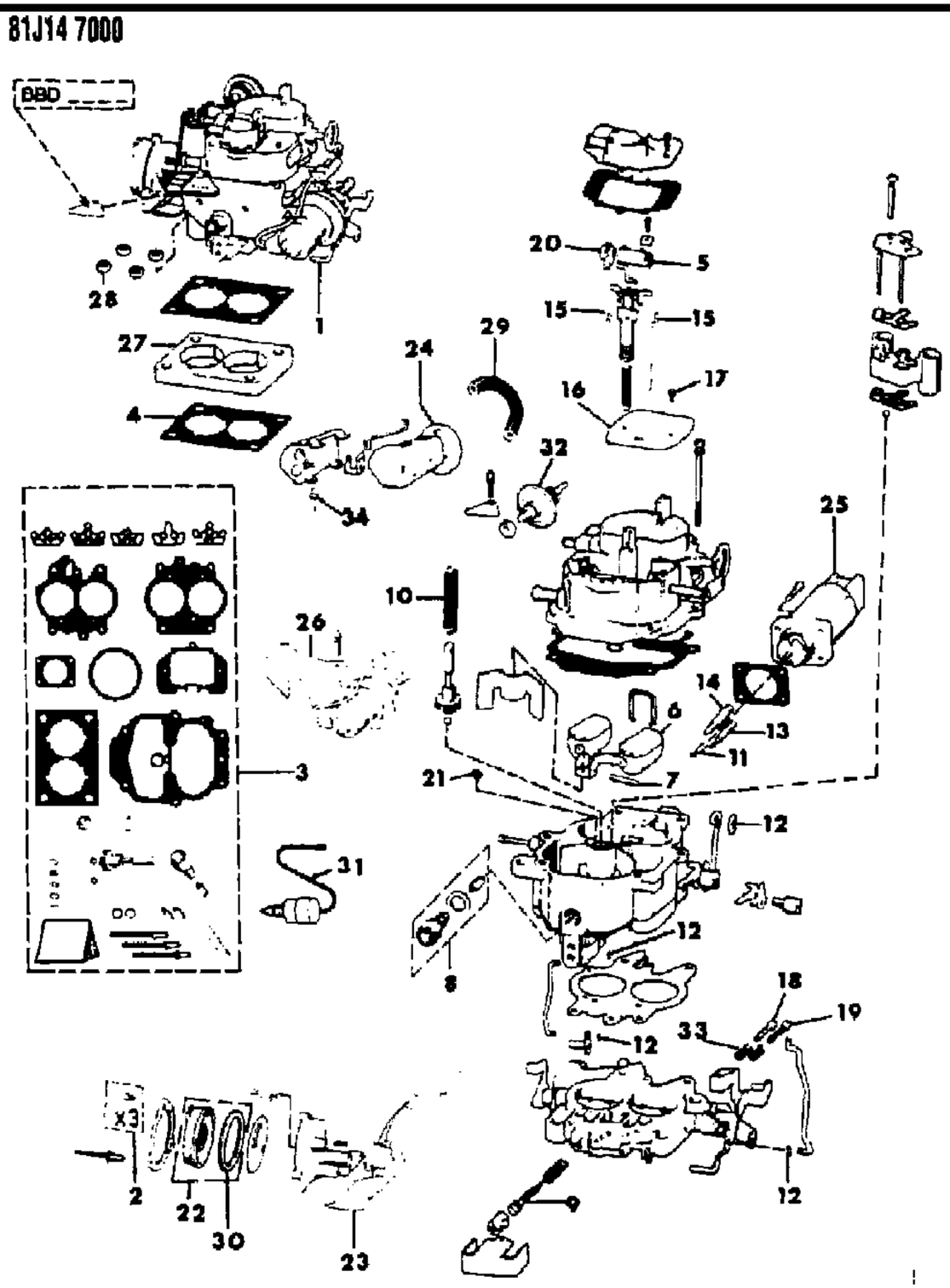

ITEM	PART NUMBER	QTY	BODY	MODEL	DESCRIPTION
	J813 3460	1			With Carburetor Tagged 8306S, 8307S
	J813 4232	1			With Carburetor Tagged 8340S, 8341S, 8355S, 8360S, 8362S, 8364S 8366S, 8367S, 8372S, 8383S, 8384S
	J812 7315	1			With Carburetor Tagged 8255S
	J813 2617	1			With Carburetor Tagged 8284S, 8312S, 8337
4	J323 5405	2			GASKET
5	J812 7319	1			ARM, Metering Rod
6	J812 7325	1			FLOAT, Carburetor
7	J812 4315	1			PIN, Float
8	J812 7326	1			NEEDLE, Incl. Seat ***
9	J813 3451	2			SCREW, Idle Mixture
10	J812 7324	1			SPRING, Pump
11	8350 0337	1			SPRING, Actuator
12	J812 1249	AR			RETAINER
13					PIN, Metering
	J813 3458	1			With Carburetor Tagged 8306S, 8307S, 8340S, 8341S, 8360S, 8362S, 8364S, 8367S, 8383S, 8384S
14					PIN, Metering
	J813 3702	1			With Carburetor Tagged 8306S, 8307S, 8340S, 8341S, 8360S, 8362S, 8364S, 8367S, 8383S, 8384S
15					ROD, Metering
	J813 3457	2			With Carburetor Tagged 8306S, 8307S, 8341S
	J813 3949	2			With Carburetor Tagged 8340S, 8383S, 8384S
	8350 0170	2			With Carburetor Tagged 8360S, 8362S, 8364S, 8367S
	J812 7816	2			With Carburetor Tagged 8255S, 8337, 8355S, 8366S, 8372S
	J812 7320	2			With Carburetor Tagged 8284S, 8312S
16	J812 7322	1			VALVE, Choke
17	J812 6130	2			SCREW, Idle Speed
18					SCREW, Fast Idle
	J812 7330	1			With Carburetor Tagged 8255S, 8284S, 8306S, 8307S, 8312S, 8337, 8340S, 8341S, 8355S, 8366S, 8372S, 8383S, 8384S
19	J812 7329	1			SCREW, Idle Speed
	J812 7329	1			With Carburetor Tagged 8255S, 8284S, 8306S, 8307S, 8312S, 8337, 8340S, 8341S, 8355S, 8366S, 8372S, 8383S, 8384S
20	J813 0220	1			ARM, Accelerator Pump
21					JET, Metering Rod
	J320 7756	2			With Carburetor Tagged 8306S, 8307S, 8340S, 8341S, 8360S, 8362S, 8364S, 8367S, 8383S, 8384S

MODEL CODES

16=Cherokee 2 Dr.(1981-83)
17=Cherokee 2 Dr.(1981-83)
73=Cherokee 2WD-2 Dr.(1984-86)
74=Cherokee 2WD-4 Dr.(1984-86)
18=Cherokee 4 Dr.(1981-83)
77=Cherokee 4WD-2 Dr.(1984-86)
78=Cherokee 4WD-4 Dr.(1984-86)
85=CJ-5 (1981-83)
86=CJ-6(1981)
87=CJ-7(1981-86)
88=CJ-8, Scrambler(1981-86)
64=Comanche 2WD-6 Ft. Box(1986)
66=Comanche 2WD-7 Ft. Box(1986)
63=Comanche 4WD-6 Ft. Box(1986)
65=Comanche 4WD-7 Ft. Box(1986)
15=Grand Wagoneer 4 Dr.(1984-86)
25=J-10 Truck 7 Ft. Box(1981-84)
26=J10 Truck 8 Ft. Box(1981-86)
27=J-20 Truck 8 Ft. Box(1981-86)
15=Wagoneer 4 Dr.(1981-83)
75=Wagoneer 4WD-4 Dr.(1984-86)

BODY
CJ=CJ-5, CJ-6, CJ-7, CJ-8, Scrambler(1981-86)
MJ=Comanche Pickup(1986)

STYLES
SJ=Wagoneer(1981-83), Grand Wagoneer(1984-86), Cherokee(1981-83), J-10, J-20(1981-86)
XJ=Wagoneer(1984-86), Cherokee(1984-86)

AR = Use as Required - = Non Illustrated Part P.A.R. = Paint as Required

CARBURETOR AND COMPONENT PARTS SIX CYLINDER SJ CHEROKEE, SJ WAGONEER, J10, J20
Figure 14-7000

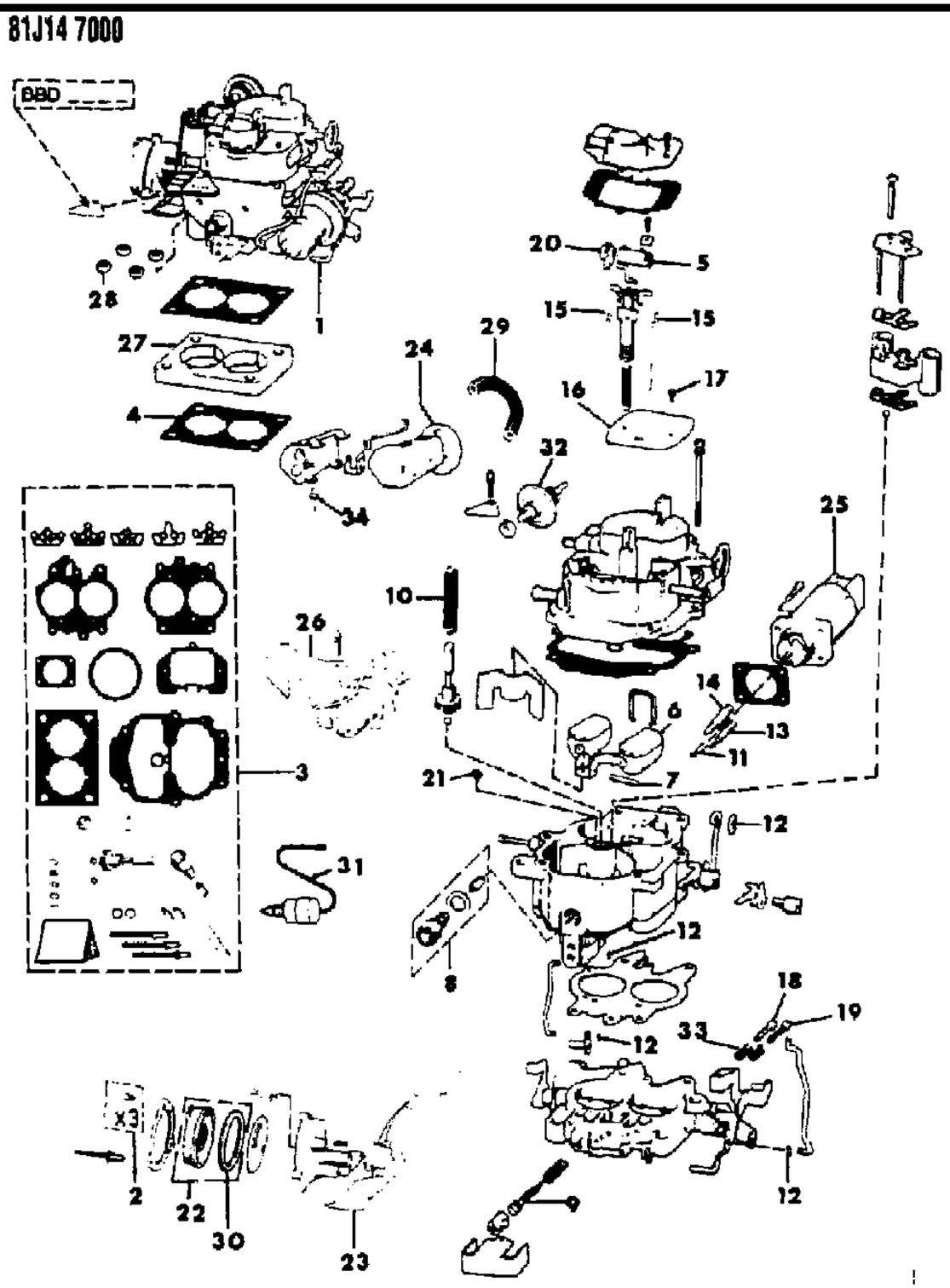

ITEM	PART NUMBER	QTY	BODY	MODEL	DESCRIPTION
	J094 8827	2			With Carburetor Tagged 8255S, 8284S, 8312S, 8337, 8366S, 8372S
22					COVER PACKAGE, Choke ***
	J813 3453	1			With Carburetor Tagged 8306S, 8307S
	J813 3455	1			With Carburetor Tagged 8340S, 8341S, 8360S, 8362S, 8364S, 8367S, 8383S, 8384S
	J813 2545	1			With Carburetor Tagged 8255S, 8337, 8355S, 8366S, 8372S
	J813 2545	1			With Carburetor Tagged 8255S, 8337, 8355S, 8366S, 8372S
	J813 2544	1			With Carburetor Tagged 8284S
	J813 3459	1			With Carburetor Tagged 8312S
23					SWITCH, Wide Open Throttle
	J813 3767	1			With Carburetor Tagged 8306S, 8307S
	J813 3952	1			With Carburetor Tagged 8340S, 8341S, 8360S, 8362S, 8364S, 8367S, 8383S, 8384S
24					DIAPHRAGM, Choke
	J813 3461	1			With Carburetor Tagged 8306S, 8307S, 8312S
	J813 2550	1			With Carburetor Tagged 8255S, 8284S, 8337, 8340S, 8341S, 8355S
	J813 4544	1			With Carburetor Tagged 8360S, 8362S, 8364S, 8367S, 8383S, 8384S, 8366S, 8372S
25	J813 2632	1			MOTOR, Carburetor Stepper
26					SOLENOID, Idle Speed
	J813 3465	1			With Carburetor Tagged 8306S, 8307S, 8312S, 8340S, 8341S, 8355S
	8350 0171	1			With Carburetor Tagged 8360S, 8362S, 8364S, 8367S, 8383S, 8384S
	J812 7629	1			With Carburetor Tagged 8257S, 8337, 8366S, 8372S
27	J323 5406	1			INSULATOR, Carburetor
28	J400 3825	4			NUT
29	J812 5812	AR			HOSE, Bulk
30					GASKET
	J813 0619	1			With Carburetor Tagged 8255S, 8284S, 8306S, 8307S, 8312S, 8337, 8340S,8341S, 8355S
	J813 3700	1			With Carburetor Tagged 8360S, 8362S, 8364S, 8366S, 8367S, 8372S, 8383S, 8384S
31	J812 7629	1			SOLENOID, Throttle
32					DASHPOT
	J812 7729	1			With Carburetor Tagged 8284S, 8306S, 8307S, 8312S
33	J812 1248	2			SPRING

MODEL CODES

16=Cherokee 2 Dr.(1981-83)	78=Cherokee 4WD-4 Dr.(1984-86)	64=Comanche 2WD-6 Ft. Box(1986)	25=J-10 Truck 7 Ft. Box(1981-84)
17=Cherokee 2 Dr.(1981-83)	85=CJ-5 (1981-83)	66=Comanche 2WD-7 Ft. Box(1986)	26=J10 Truck 8 Ft. Box(1981-86)
73=Cherokee 2WD-2 Dr.(1984-86)	86=CJ-6(1981)	63=Comanche 4WD-6 Ft. Box(1986)	27=J-20 Truck 8 Ft. Box(1981-86)
74=Cherokee 2WD-4 Dr.(1984-86)	87=CJ-7(1981-86)	65=Comanche 4WD-7 Ft. Box(1986)	15=Wagoneer 4 Dr.(1981-83)
18=Cherokee 4 Dr.(1981-83)	88=CJ-8, Scrambler(1981-86)	15=Grand Wagoneer 4 Dr.(1984-86)	75=Wagoneer 4WD-4 Dr.(1984-86)
77=Cherokee 4WD-2 Dr.(1984-86)			

BODY
CJ=CJ-5, CJ-6, CJ-7, CJ-8, Scrambler(1981-86)
MJ=Comanche Pickup(1986)

STYLES
SJ=Wagoneer(1981-83), Grand Wagoneer(1984-86), Cherokee(1981-83), J-10, J-20(1981-86)
XJ=Wagoneer(1984-86), Cherokee(1984-86)

AR = Use as Required - = Non Illustrated Part P.A.R. = Paint as Required

CARBURETOR AND COMPONENT PARTS SIX CYLINDER SJ CHEROKEE, SJ WAGONEER, J10, J20
Figure 14-7000

81J14 7000

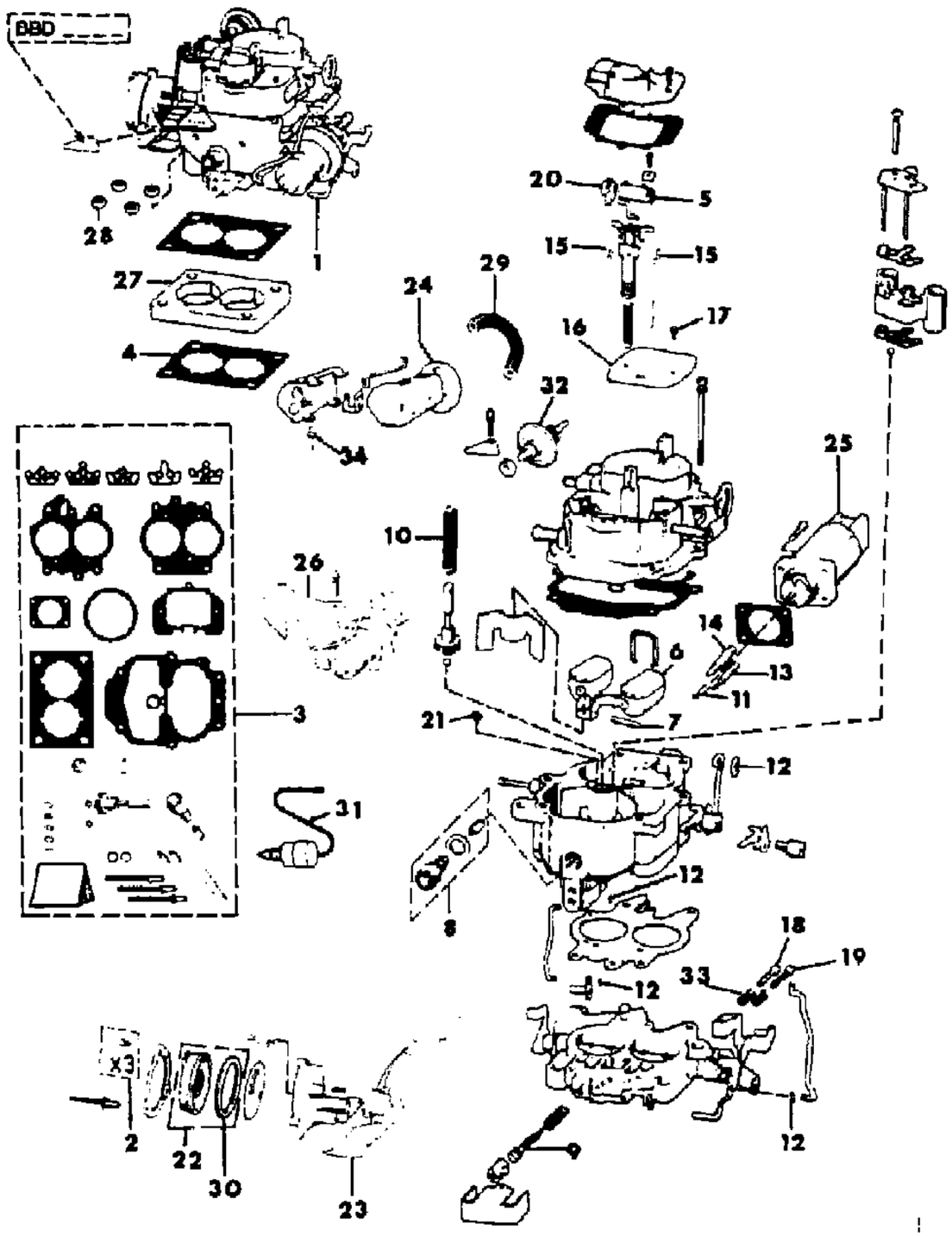

ITEM	PART NUMBER	QTY	BODY	MODEL	DESCRIPTION
34		2			RIVET, (Not Serviced)

MODEL CODES

16=Cherokee 2 Dr.(1981-83)	78=Cherokee 4WD-4 Dr.(1984-86)	64=Comanche 2WD-6 Ft. Box(1986)	25=J-10 Truck 7 Ft. Box(1981-84)
17=Cherokee 2 Dr.(1981-83)	85=CJ-5 (1981-83)	66=Comanche 2WD-7 Ft. Box(1986)	26=J10 Truck 8 Ft. Box(1981-86)
73=Cherokee 2WD-2 Dr.(1984-86)	86=CJ-6(1981)	63=Comanche 4WD-6 Ft. Box(1986)	27=J-20 Truck 8 Ft. Box(1981-86)
74=Cherokee 2WD-4 Dr.(1984-86)	87=CJ-7(1981-86)	65=Comanche 4WD-7 Ft. Box(1986)	15=Wagoneer 4 Dr.(1981-83)
18=Cherokee 4 Dr.(1981-83)	88=CJ-8, Scrambler(1981-86)	15=Grand Wagoneer 4 Dr.(1984-86)	75=Wagoneer 4WD-4 Dr.(1984-86)
77=Cherokee 4WD-2 Dr.(1984-86)			

BODY
CJ=CJ-5, CJ-6, CJ-7, CJ-8, Scrambler(1981-86)
MJ=Comanche Pickup(1986)

STYLES
SJ=Wagoneer(1981-83), Grand Wagoneer(1984-86), Cherokee(1981-83), J-10, J-20(1981-86)
XJ=Wagoneer(1984-86), Cherokee(1984-86)

AR = Use as Required - = Non Illustrated Part P.A.R. = Paint as Required

« RETURN TO GROUP INDEX

CARBURETOR AND COMPONENT PARTS EIGHT CYLINDER SJ CHEROKEE, SJ WAGONEER, J10, J20
Figure 14-7100

81J14 7100

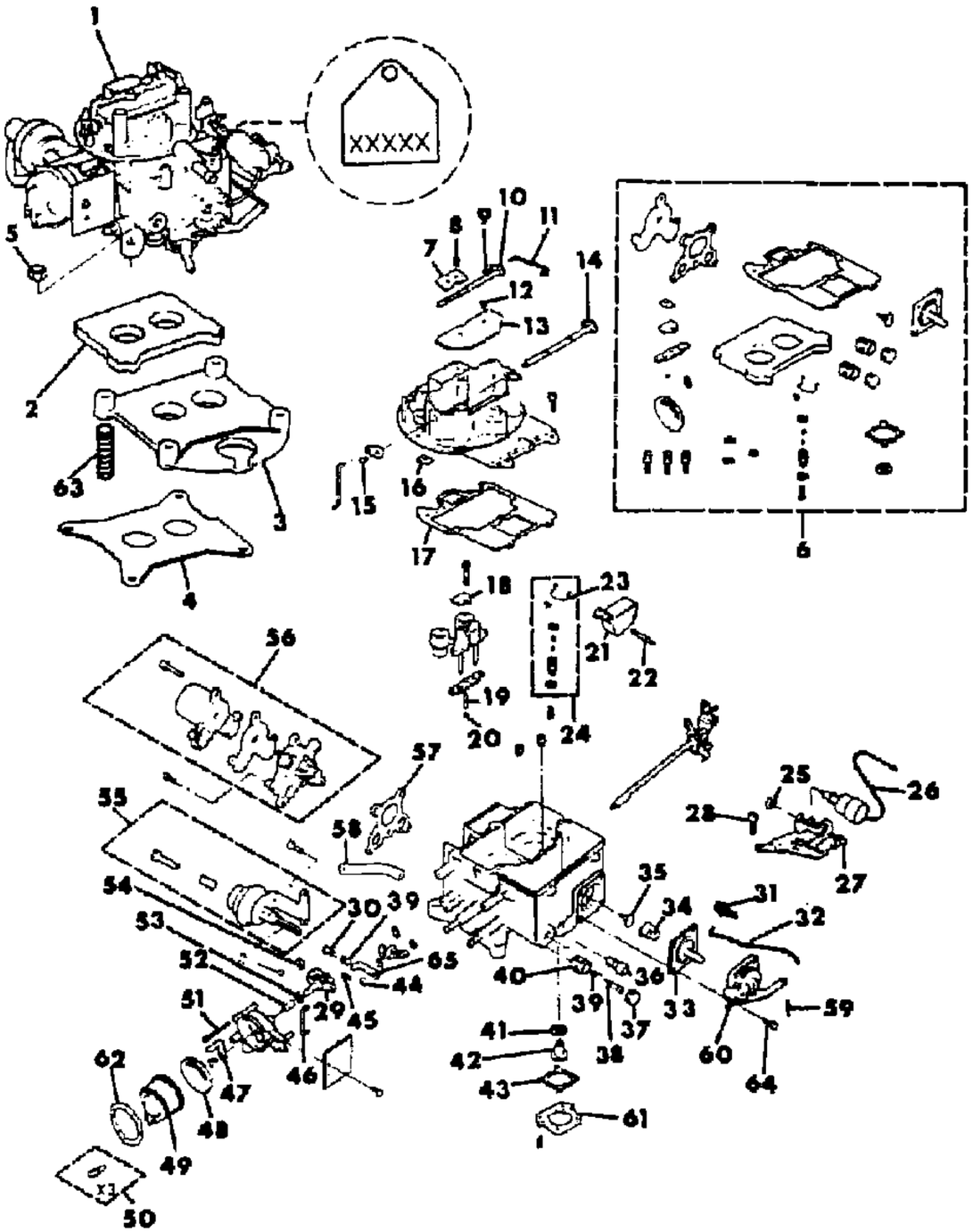

ITEM	PART NUMBER	QTY	BODY	MODEL	DESCRIPTION
1					CARBURETOR
	J323 8411	1			1981: With Automatic Transmission, Tagged 1RHA2
	J323 8412	1			1981-82: With Manual Transmission, Tagged 1RHM2
	J323 8412	1			1981-86: EXPORT, Non-Regulated Markets, with Manual Transmission, Tagged 1RHM2
	J323 8411	1			1981-83: EXPORT, Non-Regulated Markets, with Automatic Transmission, Tagged 1RHA2
	J323 6639	1			1981: EXPORT, Australian Design Rules, with Automatic Transmission, Tagged 0RA2
	J323 6639	1			1981: EXPORT, Economic Commission of Europe, with Automatic Transmission, Tagged 0RA2
	J323 6638	1			1981: EXPORT, Economic Commission of Europe, with Manual Transmission, Tagged 0RM2E
	J324 1630	1			1982-83: Without US California, with Automatic Transmission, with High Altitude, Tagged 2RHA2A
	J323 8412	1			1982-83: With Manual Transmission, Tagged 1RHM2
	J323 8411	1			1982-83: With Automatic Transmission, without High Altitude, Tagged 1RHA2
	J323 8411	1			1982-83: CANADA, with Automatic Transmission, Tagged 1RHA2
	J323 8412	1			1982-83: CANADA, with Manual Transmission, Tagged 1RHM2
	J323 8411	1			1983: US California, with Automatic Transmission, Tagged 1RHA2
	J324 1632	1			1983-85: EXPORT, Australian Design Rules, Right Hand Drive, with Automatic Transmission, Tagged 2RHA2E
	J324 1632	1			1983-85: EXPORT, Economic Commission of Europe, Tagged 2RHA2E
	3300 1726	1			1984: Tagged 4RHA2
	5300 2537	1			1985: Tagged 5RHA2
2	J322 9622	1			GASKET
3	J324 0515	1			INSULATOR
4	J319 1886	1			GASKET
5	J400 3825	4			NUT
6					REPAIR PACKAGE
	J812 8346	1			Tagged 0RA2
	J813 3822	1			Tagged 1RHA2, 1RHM2, 2RHA2A, 2RHA2E, 4RHA2
	8350 2174	1			Tagged 5RHA2
7	J812 8320	1			VALVE, Air
8	J812 8321	2			SCREW

MODEL CODES

16=Cherokee 2 Dr.(1981-83)	78=Cherokee 4WD-4 Dr.(1984-86)	64=Comanche 2WD-6 Ft. Box(1986)	25=J-10 Truck 7 Ft. Box(1981-84)
17=Cherokee 2 Dr.(1981-83)	85=CJ-5 (1981-83)	66=Comanche 2WD-7 Ft. Box(1986)	26=J10 Truck 8 Ft. Box(1981-86)
73=Cherokee 2WD-2 Dr.(1984-86)	86=CJ-6(1981)	63=Comanche 4WD-6 Ft. Box(1986)	27=J-20 Truck 8 Ft. Box(1981-86)
74=Cherokee 2WD-4 Dr.(1984-86)	87=CJ-7(1981-86)	65=Comanche 4WD-7 Ft. Box(1986)	15=Wagoneer 4 Dr.(1981-83)
18=Cherokee 4 Dr.(1981-83)	88=CJ-8, Scrambler(1981-86)	15=Grand Wagoneer 4 Dr.(1984-86)	75=Wagoneer 4WD-4 Dr.(1984-86)
77=Cherokee 4WD-2 Dr.(1984-86)			

BODY
CJ=CJ-5, CJ-6, CJ-7, CJ-8, Scrambler(1981-86)
MJ=Comanche Pickup(1986)

STYLES
SJ=Wagoneer(1981-83), Grand Wagoneer(1984-86), Cherokee(1981-83), J-10, J-20(1981-86)
XJ=Wagoneer(1984-86), Cherokee(1984-86)

AR = Use as Required - = Non Illustrated Part P.A.R. = Paint as Required

« RETURN TO GROUP INDEX »

CARBURETOR AND COMPONENT PARTS EIGHT CYLINDER SJ CHEROKEE, SJ WAGONEER, J10, J20
Figure 14-7100

81J14 7100

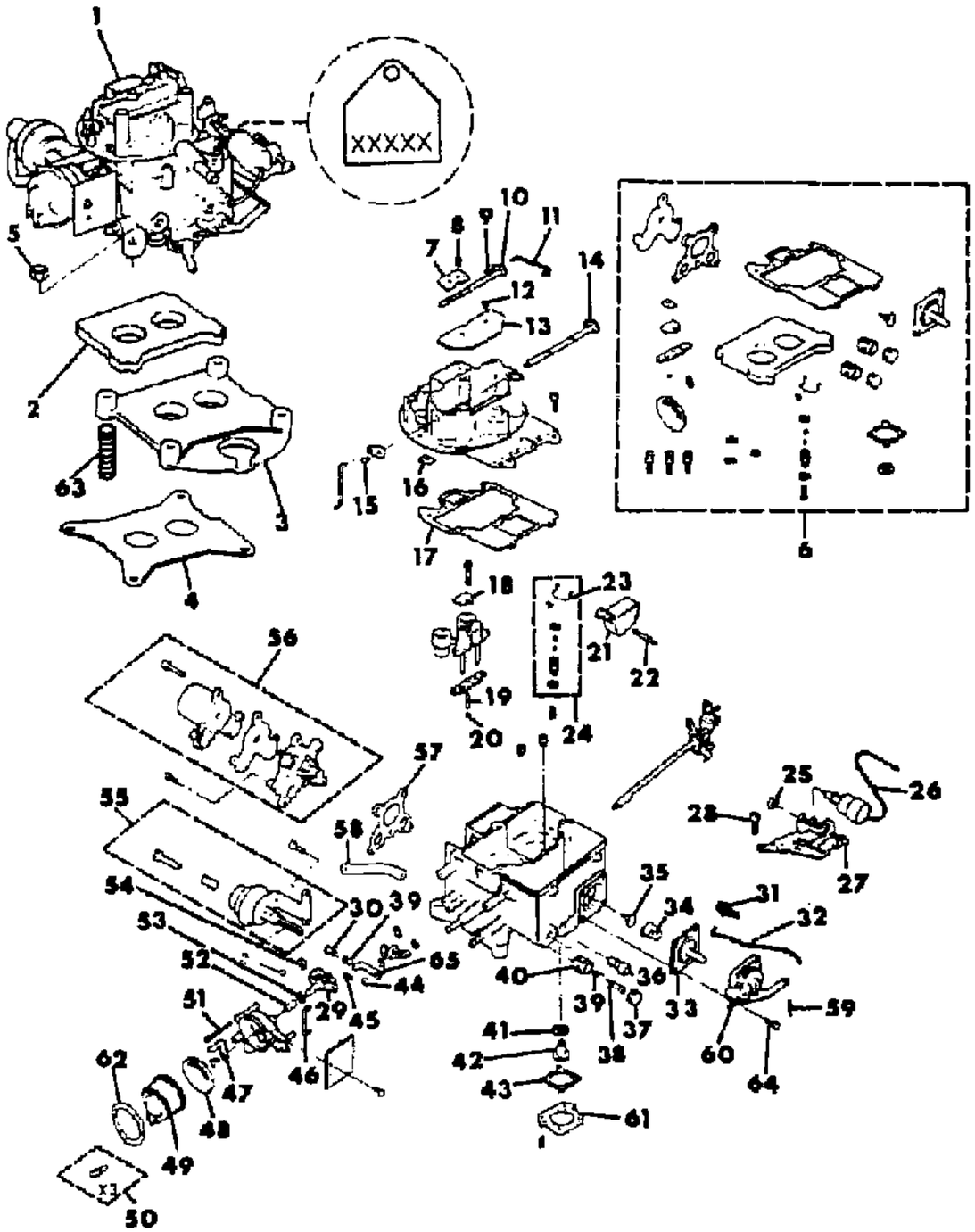

ITEM	PART NUMBER	QTY	BODY	MODEL	DESCRIPTION
9	J812 8323	1			CLIP
10	J812 8319	1			SHAFT
11	J812 8322	1			ROD
12	J320 9901	2			SCREW
13	J448 8175	1			PLATE
14	J812 8318	1			SHAFT
15	J448 5446	1			SCREW
16	J320 9880	1			SEAL
17					GASKET PACKAGE
	J813 3821	1			Tagged 0RA2, 1RHA2, 1RHM2, 2RHA2A, 2RHA2E, 4RHA2
	8350 2173	1			Tagged 5RHA2
18	J448 8180	1			PLATE
19	J812 3037	1			WEIGHT ***
20	S014 5637	1			BALL
21					FLOAT
	J448 8178	1			Tagged 0RA2, 1RHA2, 1RHM2, 2RHA2A, 2RHA2E
	8350 0930	1			Tagged 4RHA2, 5RHA2
22	J320 9910	1			SHAFT
23	J812 1330	1			RETAINER
24	J812 8309	1			NEEDLE AND SEAT PACKAGE ***
25	S010 7381	1			NUT
26	J812 0480	1			SOLENOID
27	J812 1166	1			BRACKET
28	J448 5440	1			SCREW
29					LEVER AND SHAFT ***
	J812 8311	1			Tagged 0RA2
	J812 8276	1			Tagged 1RHA2, 1RHM2, 2RHA2A, 2RHA2E, 4RHA2, 5RHA2
30	J812 1329	1			SCREW
31	J812 4455	1			CLIP
32	J812 5981	1			ROD
33					DIAPHRAGM
	J812 5985	1			Tagged 0RA2
	J813 3833	1			Tagged 1RHA2, 1RHM2, 2RHA2A, 2RHA2E, 4RHA2, 5RHA2
34	J812 5040	1			SPRING
35					VALVE
	J320 9916	1			Tagged 0RA2, 1RHA2, 1RHM2, 2RHA2A, 2RHA2E
	8350 1195	1			Tagged 4RHA2, 5RHA2
36	J013 7406	1			FITTING
37	J813 3831	1			CAP

MODEL CODES

16=Cherokee 2 Dr.(1981-83)
17=Cherokee 2 Dr.(1981-83)
73=Cherokee 2WD-2 Dr.(1984-86)
74=Cherokee 2WD-4 Dr.(1984-86)
18=Cherokee 4 Dr.(1981-83)
77=Cherokee 4WD-2 Dr.(1984-86)
78=Cherokee 4WD-4 Dr.(1984-86)
85=CJ-5 (1981-83)
86=CJ-6(1981)
87=CJ-7(1981-86)
88=CJ-8, Scrambler(1981-86)
64=Comanche 2WD-6 Ft. Box(1986)
66=Comanche 2WD-7 Ft. Box(1986)
63=Comanche 4WD-6 Ft. Box(1986)
65=Comanche 4WD-7 Ft. Box(1986)
15=Grand Wagoneer 4 Dr.(1984-86)
25=J-10 Truck 7 Ft. Box(1981-84)
26=J10 Truck 8 Ft. Box(1981-86)
27=J-20 Truck 8 Ft. Box(1981-86)
15=Wagoneer 4 Dr.(1981-83)
75=Wagoneer 4WD-4 Dr.(1984-86)

BODY
CJ=CJ-5, CJ-6, CJ-7, CJ-8, Scrambler(1981-86)
MJ=Comanche Pickup(1986)

STYLES
SJ=Wagoneer(1981-83), Grand Wagoneer(1984-86), Cherokee(1981-83), J-10, J-20(1981-86)
XJ=Wagoneer(1984-86), Cherokee(1984-86)

AR = Use as Required - = Non Illustrated Part P.A.R. = Paint as Required

CARBURETOR AND COMPONENT PARTS EIGHT CYLINDER SJ CHEROKEE, SJ WAGONEER, J10, J20
Figure 14-7100

81J14 7100

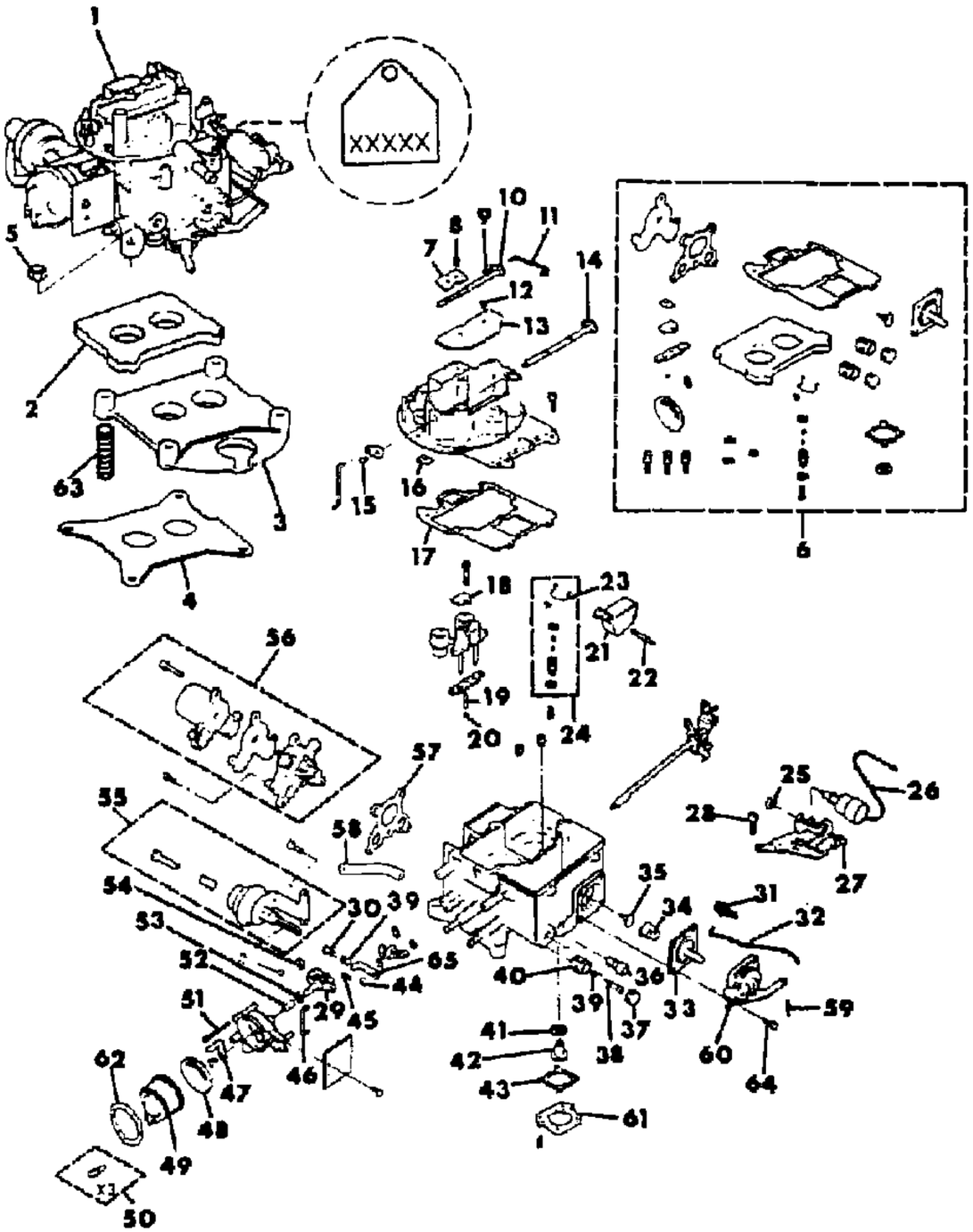

ITEM	PART NUMBER	QTY	BODY	MODEL	DESCRIPTION
38					NEEDLE ***
	J448 8173	1			Tagged 0RA2
	J813 3890	1			Tagged 1RHA2, 1RHM2, 2RHA2A, 2RHA2E, 4RHA2, 5RHA2
39	J320 9917	1			SPRING
40	J813 3832	1			CAP
41					GASKET
	J813 3240	1			Tagged 0RA2, 1RHA2, 1RHM2, 2RHA2A
	J812 7515	1			Tagged 2RHA2E, 4RHA2, 5HA2
42					VALVE
	J812 5041	1			Tagged 0RA2
	J812 5042	1			Tagged 1RHA2, 1RHM2, 4RHA2, 5RHA2
	J812 5983	1			Tagged 2RHA2A
	8350 1989	1			Tagged 2RHA2E
43	J320 9885	1			GASKET
44	J027 1169	1			NUT
45	J448 8171	1			WASHER
46	J320 9893	1			ROD
47	J812 8327	1			LEVER
48					GASKET
	J812 1333	1			Tagged 0RA2
	J813 3830	1			Tagged 1RHA2, 1RHM2, 2RHA2A, 2RHA2E, 4RHA2
	8350 2166	1			Tagged 5RHA2
49					HOUSING
	J813 0615	1			Tagged 0RA2
	J813 3889	1			Tagged 1RHA2, 1RHM2, 2RHA2A, 2RHA2E, 4RHA2, 5RHA2
50	J813 3834	1			SCREW PACKAGE
51	J448 5441	3			SCREW
52					BUSHING
	J448 8477	1			Tagged 0RA2, 1RHA2, 1RHM2
	J812 5987	1			Tagged 2RHA2A, 2RHA2E, 4RHA2, 5RHA2
53	J320 9925	2			WASHER
54	J320 9922	2			RING
55					DIAPHRAGM, Choke
	J448 8478	1			Tagged 0RA2
	J813 4496	1			Tagged 1RHA2, 1RHM2, 2RHA2A, 2RHA2E, 4RHA2, 5RHA2
56	J812 8314	1			COMPENSATOR
57	J812 8315	1			GASKET
58	J812 5812	1			HOSE, Bulk, 3/16 I.D.
59	J320 9891	1			PIN

MODEL CODES

16=Cherokee 2 Dr.(1981-83)	78=Cherokee 4WD-4 Dr.(1984-86)	64=Comanche 2WD-6 Ft. Box(1986)	25=J-10 Truck 7 Ft. Box(1981-84)
17=Cherokee 2 Dr.(1981-83)	85=CJ-5 (1981-83)	66=Comanche 2WD-7 Ft. Box(1986)	26=J10 Truck 8 Ft. Box(1981-86)
73=Cherokee 2WD-2 Dr.(1984-86)	86=CJ-6(1981)	63=Comanche 4WD-6 Ft. Box(1986)	27=J-20 Truck 8 Ft. Box(1981-86)
74=Cherokee 2WD-4 Dr.(1984-86)	87=CJ-7(1981-86)	65=Comanche 4WD-7 Ft. Box(1986)	15=Wagoneer 4 Dr.(1981-83)
18=Cherokee 4 Dr.(1981-83)	88=CJ-8, Scrambler(1981-86)	15=Grand Wagoneer 4 Dr.(1984-86)	75=Wagoneer 4WD-4 Dr.(1984-86)
77=Cherokee 4WD-2 Dr.(1984-86)			

BODY
CJ=CJ-5, CJ-6, CJ-7, CJ-8, Scrambler(1981-86)
MJ=Comanche Pickup(1986)

STYLES
SJ=Wagoneer(1981-83), Grand Wagoneer(1984-86), Cherokee(1981-83), J-10, J-20(1981-86)
XJ=Wagoneer(1984-86), Cherokee(1984-86)

AR = Use as Required - = Non Illustrated Part P.A.R. = Paint as Required

CARBURETOR AND COMPONENT PARTS EIGHT CYLINDER SJ CHEROKEE, SJ WAGONEER, J10, J20
Figure 14-7100

81J14 7100

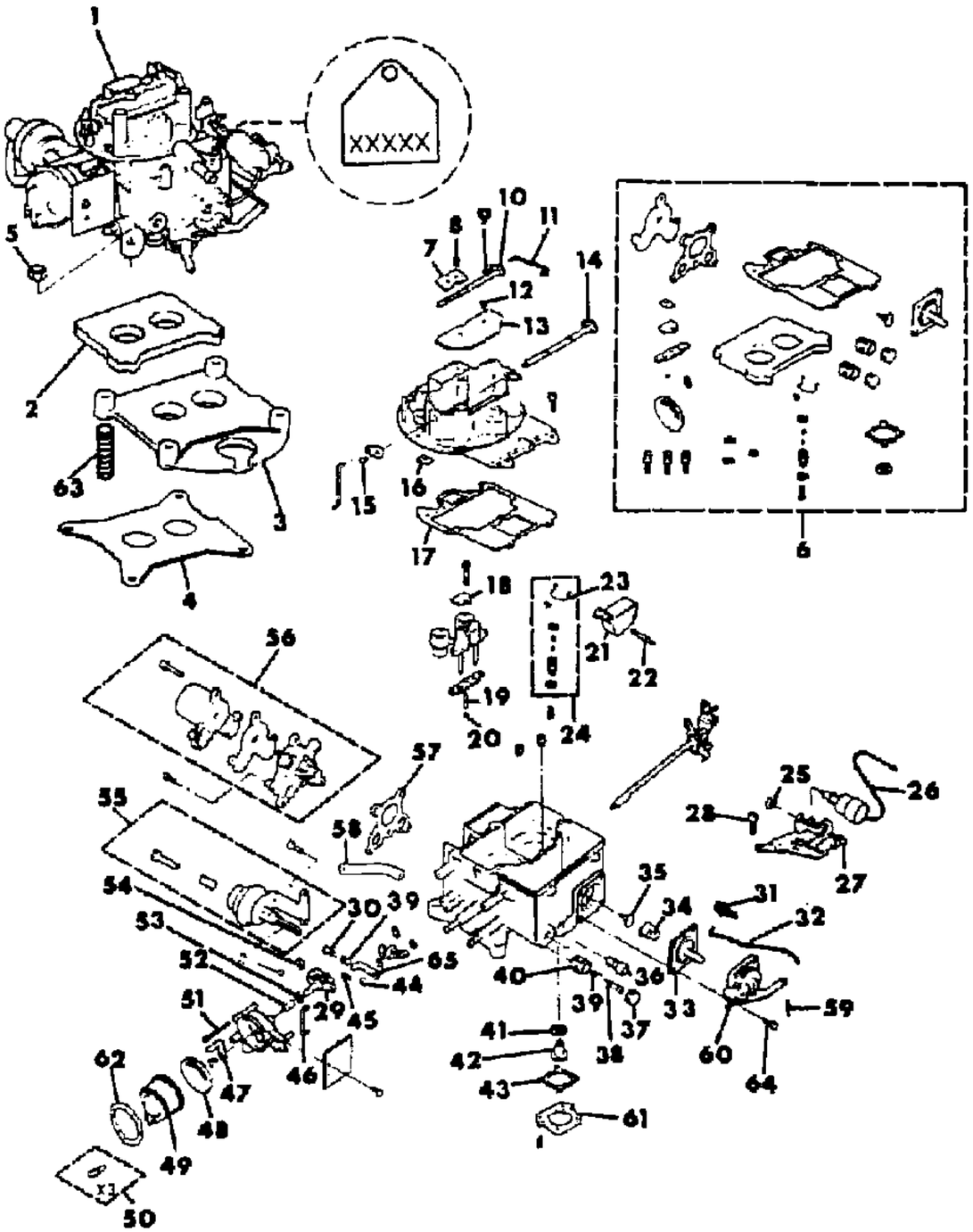

ITEM	PART NUMBER	QTY	BODY	MODEL	DESCRIPTION
60					COVER
	J812 5982	1			Tagged 0RA2
61					COVER
	J812 5043	1			Tagged 0RA2
62					CLAMP
	J812 3250	1			Tagged 0RA2
63	J019 2423	4			STUD
64	J448 8169	4			SCREW
65					LEVER
	J812 1331	1			Tagged 0RA2
	J813 0658	1			Tagged 1RHA2, 1RHM2, 2RHA2A

MODEL CODES
16=Cherokee 2 Dr.(1981-83)
17=Cherokee 2 Dr.(1981-83)
73=Cherokee 2WD-2 Dr.(1984-86)
74=Cherokee 2WD-4 Dr.(1984-86)
18=Cherokee 4 Dr.(1981-83)
77=Cherokee 4WD-2 Dr.(1984-86)
78=Cherokee 4WD-4 Dr.(1984-86)
85=CJ-5 (1981-83)
86=CJ-6(1981)
87=CJ-7(1981-86)
88=CJ-8, Scrambler(1981-86)
64=Comanche 2WD-6 Ft. Box(1986)
66=Comanche 2WD-7 Ft. Box(1986)
63=Comanche 4WD-6 Ft. Box(1986)
65=Comanche 4WD-7 Ft. Box(1986)
15=Grand Wagoneer 4 Dr.(1984-86)
25=J-10 Truck 7 Ft. Box(1981-84)
26=J10 Truck 8 Ft. Box(1981-86)
27=J-20 Truck 8 Ft. Box(1981-86)
15=Wagoneer 4 Dr.(1981-83)
75=Wagoneer 4WD-4 Dr.(1984-86)

BODY
CJ=CJ-5, CJ-6, CJ-7, CJ-8, Scrambler(1981-86)
MJ=Comanche Pickup(1986)

STYLES
SJ=Wagoneer(1981-83), Grand Wagoneer(1984-86), Cherokee(1981-83), J-10, J-20(1981-86)
XJ=Wagoneer(1984-86), Cherokee(1984-86)

AR = Use as Required - = Non Illustrated Part P.A.R. = Paint as Required

« RETURN TO GROUP INDEX

ACCELERATOR PEDAL AND LINKAGE SIX, EIGHT CYLINDER SJ CHEROKEE, SJ WAGONEER, J10, J20
Figure 14-7200

81J14 7200

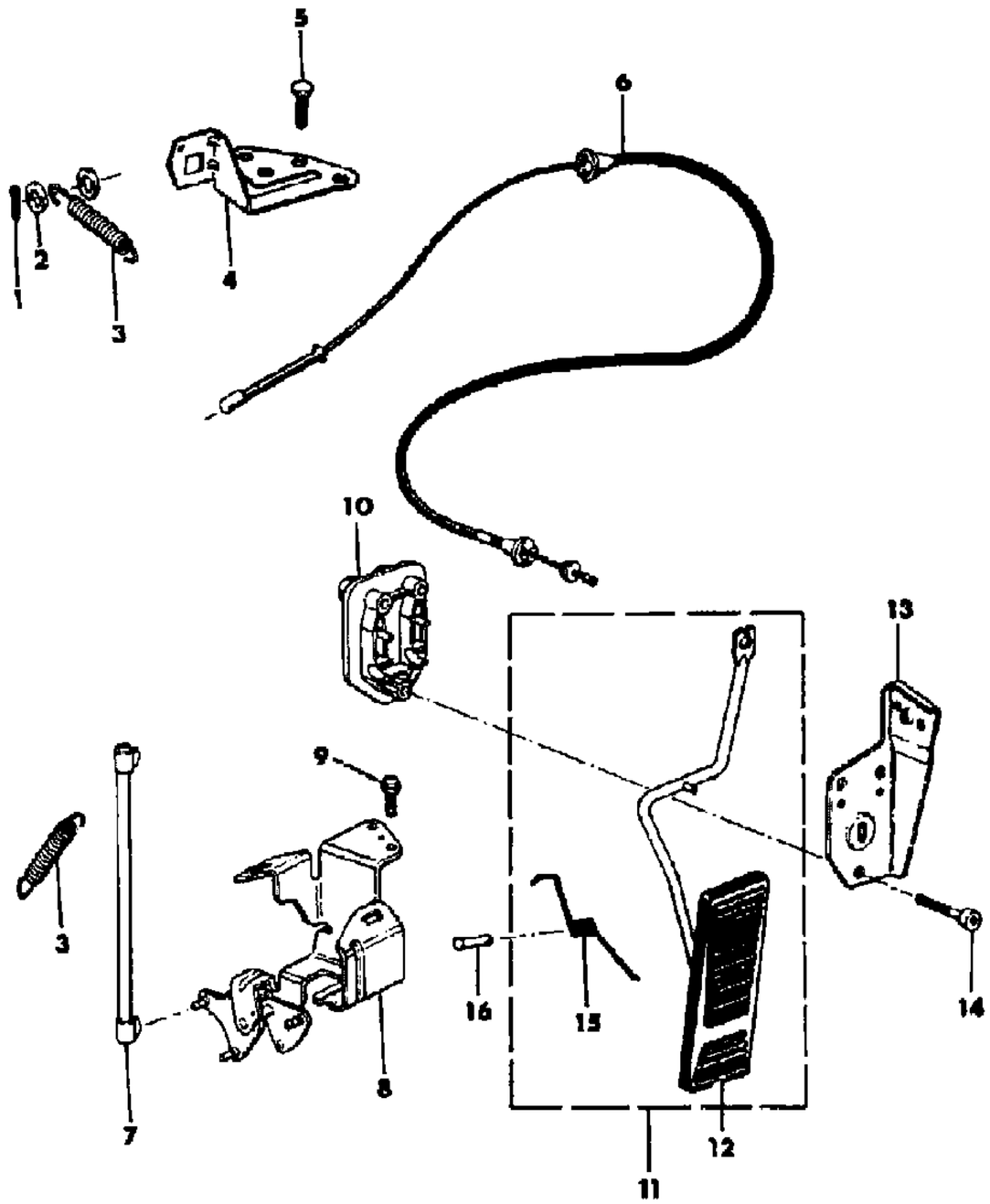

ITEM	PART NUMBER	QTY	BODY	MODEL	DESCRIPTION
1					PIN, Cotter
	J043 5864	1			Eight Cylinder
2					WASHER
	J012 0392	2			Eight Cylinder
3					SPRING, Return
	J535 8241	2			Six Cylinder
	J535 7086	1			Eight Cylinder
4					BRACKET, Cable
	J535 7914	1			Eight Cylinder
5					SCREW
	J400 0987	2			Eight Cylinder
6					CABLE, Accelerator
	J536 2800	1			Six Cylinder
	J535 7962	1			Eight Cylinder
7					LINK, Carburetor
	J323 9634	1			Six Cylinder
8					BELLCRANK ASSY ***
	J536 2728	1			Six Cylinder
9					SCREW
	J027 3573	3			Six Cylinder
10	J536 3792	1			SUPPORT, Pedal
11	5300 3963	1			PEDAL, Accelerator
12	5300 3932	1			PAD, Pedal
13	J536 0187	1			PLATE, Mounting
14	J400 7027	3			SCREW
15	J319 3369	1			SPRING
16	J319 3368	1			PIN

MODEL CODES

16=Cherokee 2 Dr.(1981-83)
17=Cherokee 2 Dr.(1981-83)
73=Cherokee 2WD-2 Dr.(1984-86)
74=Cherokee 2WD-4 Dr.(1984-86)
18=Cherokee 4 Dr.(1981-83)
77=Cherokee 4WD-2 Dr.(1984-86)
78=Cherokee 4WD-4 Dr.(1984-86)
85=CJ-5 (1981-83)
86=CJ-6(1981)
87=CJ-7(1981-86)
88=CJ-8, Scrambler(1981-86)
64=Comanche 2WD-6 Ft. Box(1986)
66=Comanche 2WD-7 Ft. Box(1986)
63=Comanche 4WD-6 Ft. Box(1986)
65=Comanche 4WD-7 Ft. Box(1986)
15=Grand Wagoneer 4 Dr.(1984-86)
25=J-10 Truck 7 Ft. Box(1981-84)
26=J10 Truck 8 Ft. Box(1981-86)
27=J-20 Truck 8 Ft. Box(1981-86)
15=Wagoneer 4 Dr.(1981-83)
75=Wagoneer 4WD-4 Dr.(1984-86)

BODY
CJ=CJ-5, CJ-6, CJ-7, CJ-8, Scrambler(1981-86)
MJ=Comanche Pickup(1986)

STYLES
SJ=Wagoneer(1981-83), Grand Wagoneer(1984-86), Cherokee(1981-83), J-10, J-20(1981-86)
XJ=Wagoneer(1984-86), Cherokee(1984-86)

AR = Use as Required - = Non Illustrated Part P.A.R. = Paint as Required

« RETURN TO GROUP INDEX

LINKAGE, AUTOMATIC TRANSMISSION THROTTLE VALVE SIX, EIGHT CYLINDER SJ CHEROKEE, SJ WAGONEER, J10, J20
Figure 14-7300

81J14 7300

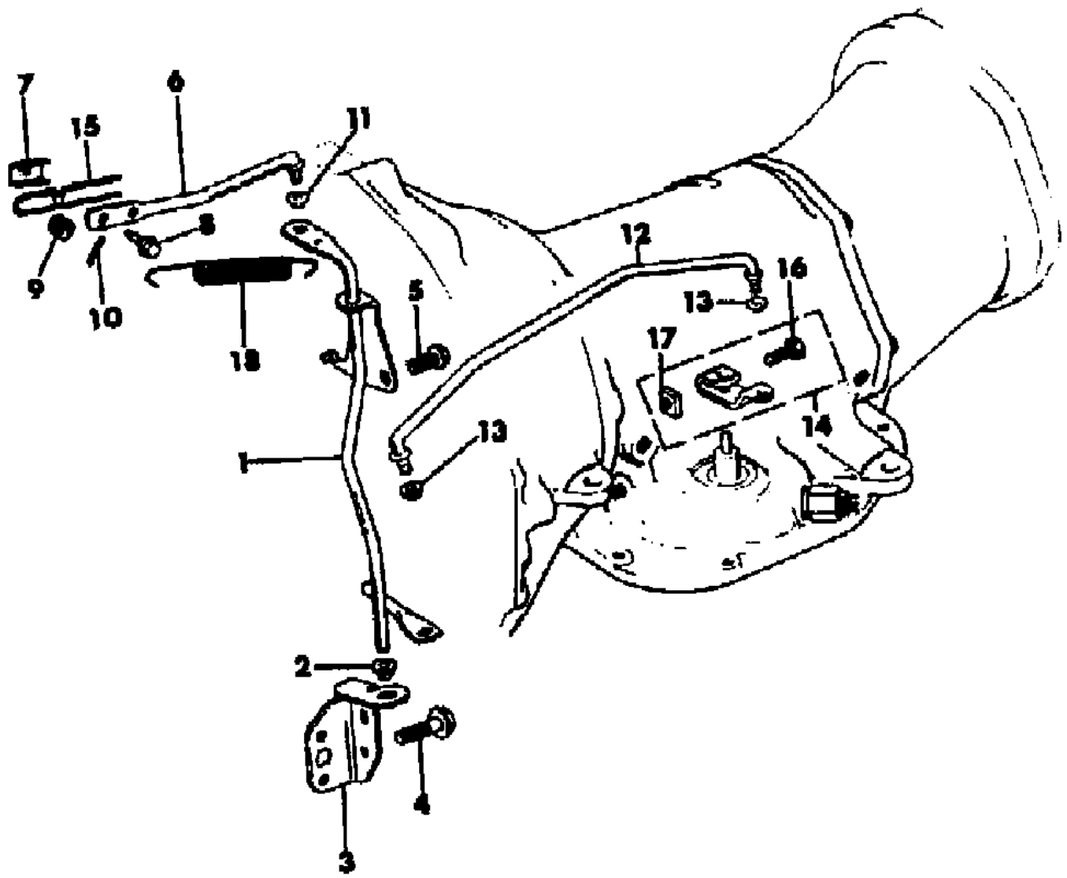

ITEM	PART NUMBER	QTY	BODY	MODEL	DESCRIPTION
1	J536 1240	1			BELLCRANK
2	J322 0413	1			BUSHING
3	J536 0066	1			BRACKET
4	J400 6297	2			SCREW
5	J027 4902	1			SCREW
6	J536 1058	1			ROD
7	J321 7200	1			CLAMP
8	S943 2476	1			BOLT
9	J322 3656	1			SPACER
10	J400 5122	1			PIN, Hitch
11	J322 0125	1			BUSHING
12					LINK
					Six Cylinder
	J323 9820	1			Rod has 1/4" Dia. Mounting Hole
	J324 1261	1			Rod has 1/2" x 1/4" Mounting Hole
	J322 0684	1			Eight Cylinder
13	J322 0125	2			BUSHING
14					LEVER ASSY ***
					Six Cylinder
	J322 0667	1			Rod has 1/4" Dia. Mounting Hole
	J324 0291	1			Rod has 1/2" Mounting Hole
	J322 0677	1			Eight Cylinder
15					LINK, Carburetor
	J322 2405	1			Six Cylinder
	J536 1056	1			Eight Cylinder
16	J400 7460	1			BOLT
17	J011 4381	1			NUT
18	J319 6286	1			SPRING

MODEL CODES

16=Cherokee 2 Dr.(1981-83)
17=Cherokee 2 Dr.(1981-83)
73=Cherokee 2WD-2 Dr.(1984-86)
74=Cherokee 2WD-4 Dr.(1984-86)
18=Cherokee 4 Dr.(1981-83)
77=Cherokee 4WD-2 Dr.(1984-86)
78=Cherokee 4WD-4 Dr.(1984-86)
85=CJ-5 (1981-83)
86=CJ-6(1981)
87=CJ-7(1981-86)
88=CJ-8, Scrambler(1981-86)
64=Comanche 2WD-6 Ft. Box(1986)
66=Comanche 2WD-7 Ft. Box(1986)
63=Comanche 4WD-6 Ft. Box(1986)
65=Comanche 4WD-7 Ft. Box(1986)
15=Grand Wagoneer 4 Dr.(1984-86)
25=J-10 Truck 7 Ft. Box(1981-84)
26=J10 Truck 8 Ft. Box(1981-86)
27=J-20 Truck 8 Ft. Box(1981-86)
15=Wagoneer 4 Dr.(1981-83)
75=Wagoneer 4WD-4 Dr.(1984-86)

BODY
CJ=CJ-5, CJ-6, CJ-7, CJ-8, Scrambler(1981-86)
MJ=Comanche Pickup(1986)

STYLES
SJ=Wagoneer(1981-83), Grand Wagoneer(1984-86), Cherokee(1981-83), J-10, J-20(1981-86)
XJ=Wagoneer(1984-86), Cherokee(1984-86)

AR = Use as Required - = Non Illustrated Part P.A.R. = Paint as Required

« RETURN TO GROUP INDEX

81J14 7400

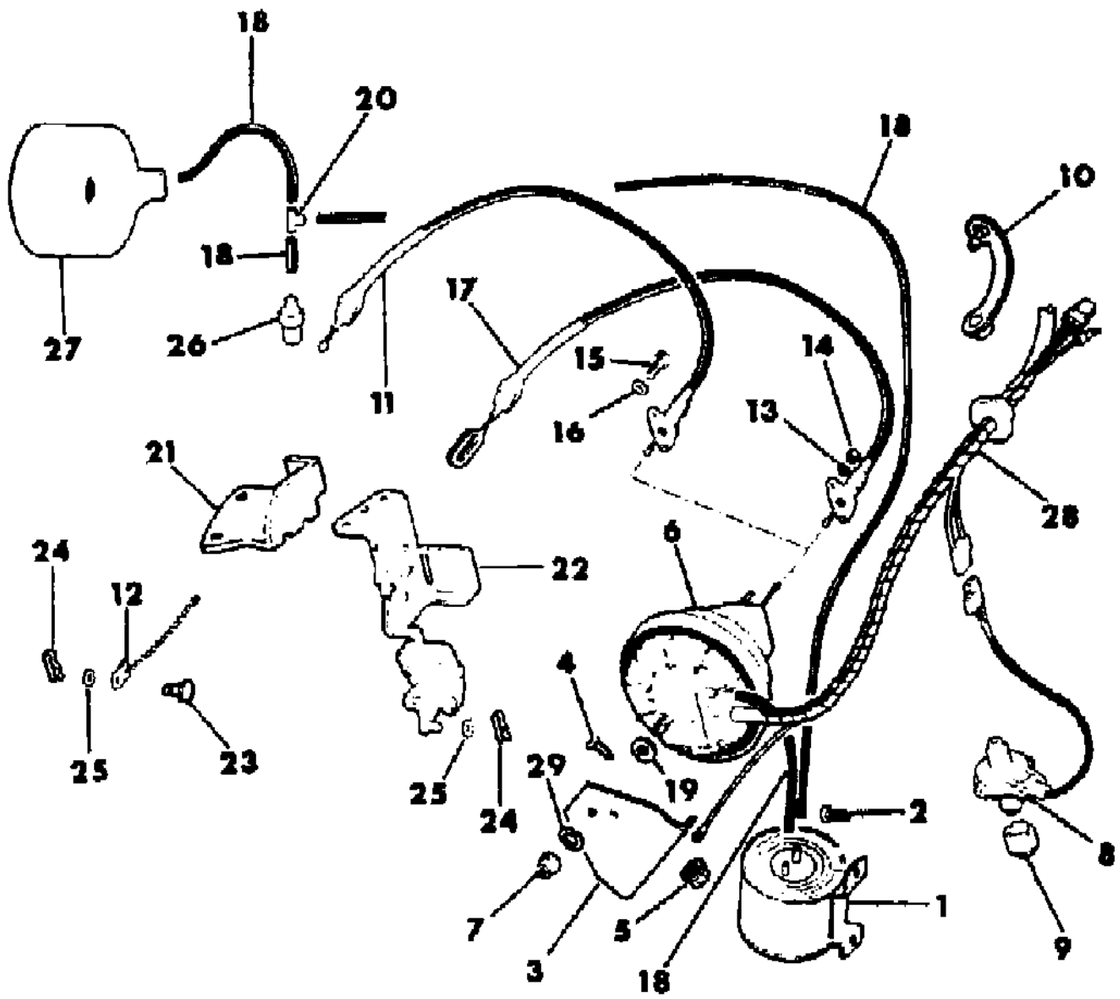

ITEM	PART NUMBER	QTY	BODY	MODEL	DESCRIPTION
1					RESERVOIR, Vacuum
	J323 2991	1			1981: Six Cylinder
	J323 2991	1			1982
	5300 1068	1			1983-86
2	J812 3047	2			SCREW
3	J575 8370	1			BRACKET
4	J067 3600	2			SCREW
5	J941 6918	2			NUT
6					SERVO, Cruise Control
	J536 2788	1			1981: Six Cylinder
	J576 1988	1			1982-86
7	J941 6918	1			NUT
8					GENERATOR, Cruise Control ***
	J323 5463	1			1981: Six Cylinder
	J323 5463	1			1982-84
	3300 2448	1			1985-86 (w/Male & Female Connector)
9					ADAPTER, Cruise Control Generator
	8350 1453	1			1985-86
10	J400 1712	2			STRAP
11					CABLE
	J324 0422	1			1982-84: Eight Cylinder
12					CHAIN ***
	J575 8625	1			1981: Six Cylinder
	J324 0407	1			1982: Six Cylinder
	J323 4026	1			1982-86
13	S013 1044	2			WASHER
14	S013 4530	2			NUT
15	S015 9340	2			SCREW
16	S013 1014	2			WASHER
17					CABLE
					Six Cylinder
	J575 8627	1			1981-82
	J324 2185	1			1983-84
18					HOSE, Bulk
	J448 7656	AR			1981: .19" I.D.
	J812 5810	AR			.12" I.D.
	J812 5813	AR			.22" I.D.
	J812 5823	AR			.31" I.D.
19	J012 0396	1			WASHER

MODEL CODES
16=Cherokee 2 Dr.(1981-83)
17=Cherokee 2 Dr.(1981-83)
73=Cherokee 2WD-2 Dr.(1984-86)
74=Cherokee 2WD-4 Dr.(1984-86)
18=Cherokee 4 Dr.(1981-83)
77=Cherokee 4WD-2 Dr.(1984-86)
78=Cherokee 4WD-4 Dr.(1984-86)
85=CJ-5 (1981-83)
86=CJ-6(1981)
87=CJ-7(1981-86)
88=CJ-8, Scrambler(1981-86)
64=Comanche 2WD-6 Ft. Box(1986)
66=Comanche 2WD-7 Ft. Box(1986)
63=Comanche 4WD-6 Ft. Box(1986)
65=Comanche 4WD-7 Ft. Box(1986)
15=Grand Wagoneer 4 Dr.(1984-86)
25=J-10 Truck 7 Ft. Box(1981-84)
26=J10 Truck 8 Ft. Box(1981-86)
27=J-20 Truck 8 Ft. Box(1981-86)
15=Wagoneer 4 Dr.(1981-83)
75=Wagoneer 4WD-4 Dr.(1984-86)

BODY
CJ=CJ-5, CJ-6, CJ-7, CJ-8, Scrambler(1981-86)
MJ=Comanche Pickup(1986)

STYLES
SJ=Wagoneer(1981-83), Grand Wagoneer(1984-86), Cherokee(1981-83), J-10, J-20(1981-86)
XJ=Wagoneer(1984-86), Cherokee(1984-86)

AR = Use as Required - = Non Illustrated Part P.A.R. = Paint as Required

81J14 7400

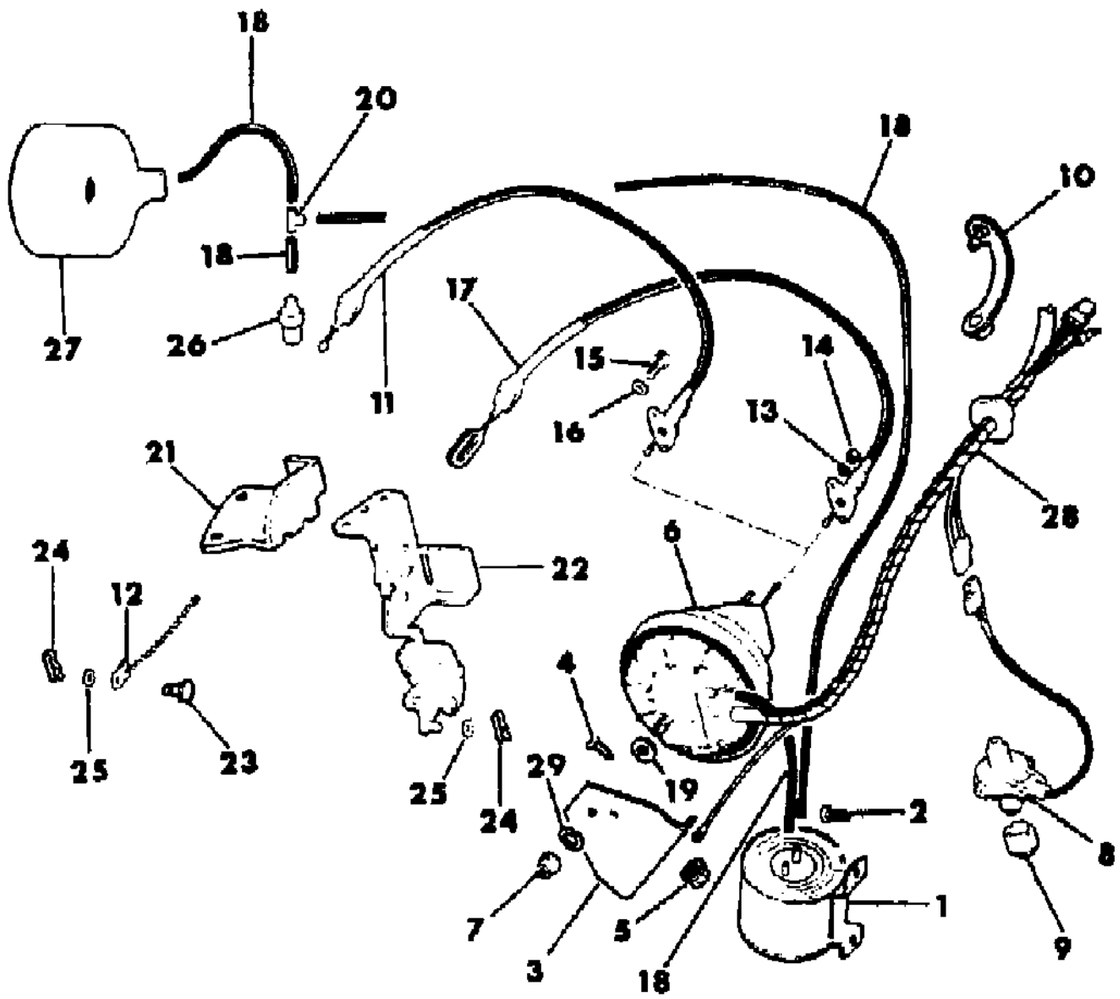

ITEM	PART NUMBER	QTY	BODY	MODEL	DESCRIPTION
20					TEE
	J097 5940	1			.25" I.D.
	J400 6635	1			.31" I.D.
21					BRACKET, Cable
	J535 7914	1			Eight Cylinder
22					BRACKET, Cable
	J536 2728	1			Six Cylinder
23					PIN, Clevis
	J319 4849	1			Eight Cylinder
24	J400 5758	1			CLIP
25	J044 6152	1			WASHER
26					FITTING
	J321 5574	1			Six Cylinder
	J322 5447	1			Eight Cylinder
27	J374 1279	1			RESERVOIR, Vacuum
28					HARNESS
	J575 7442	1			1981: Six Cylinder
	J576 2580	1			1982-85: With Manual Transmission
	J576 2560	1			1982-85: With Automatic Transmission
	5600 2122	1			1986: With Manual Transmission
	5600 2025	1			1986: With Automatic Transmission
29	J012 0380	1			WASHER, Lock

MODEL CODES
16=Cherokee 2 Dr.(1981-83)
17=Cherokee 2 Dr.(1981-83)
73=Cherokee 2WD-2 Dr.(1984-86)
74=Cherokee 2WD-4 Dr.(1984-86)
18=Cherokee 4 Dr.(1981-83)
77=Cherokee 4WD-2 Dr.(1984-86)
78=Cherokee 4WD-4 Dr.(1984-86)
85=CJ-5 (1981-83)
86=CJ-6(1981)
87=CJ-7(1981-86)
88=CJ-8, Scrambler(1981-86)
64=Comanche 2WD-6 Ft. Box(1986)
66=Comanche 2WD-7 Ft. Box(1986)
63=Comanche 4WD-6 Ft. Box(1986)
65=Comanche 4WD-7 Ft. Box(1986)
15=Grand Wagoneer 4 Dr.(1984-86)
25=J-10 Truck 7 Ft. Box(1981-84)
26=J10 Truck 8 Ft. Box(1981-86)
27=J-20 Truck 8 Ft. Box(1981-86)
15=Wagoneer 4 Dr.(1981-83)
75=Wagoneer 4WD-4 Dr.(1984-86)

BODY
CJ=CJ-5, CJ-6, CJ-7, CJ-8, Scrambler(1981-86)
MJ=Comanche Pickup(1986)

STYLES
SJ=Wagoneer(1981-83), Grand Wagoneer(1984-86), Cherokee(1981-83), J-10, J-20(1981-86)
XJ=Wagoneer(1984-86), Cherokee(1984-86)

AR = Use as Required - = Non Illustrated Part P.A.R. = Paint as Required

SPEED CONTROL, INSTRUMENT PANEL COMPONENTS SIX, EIGHT CYLINDER SJ CHEROKEE, SJ WAGONEER, J10, J20
Figure 14-7500

81J14 7500

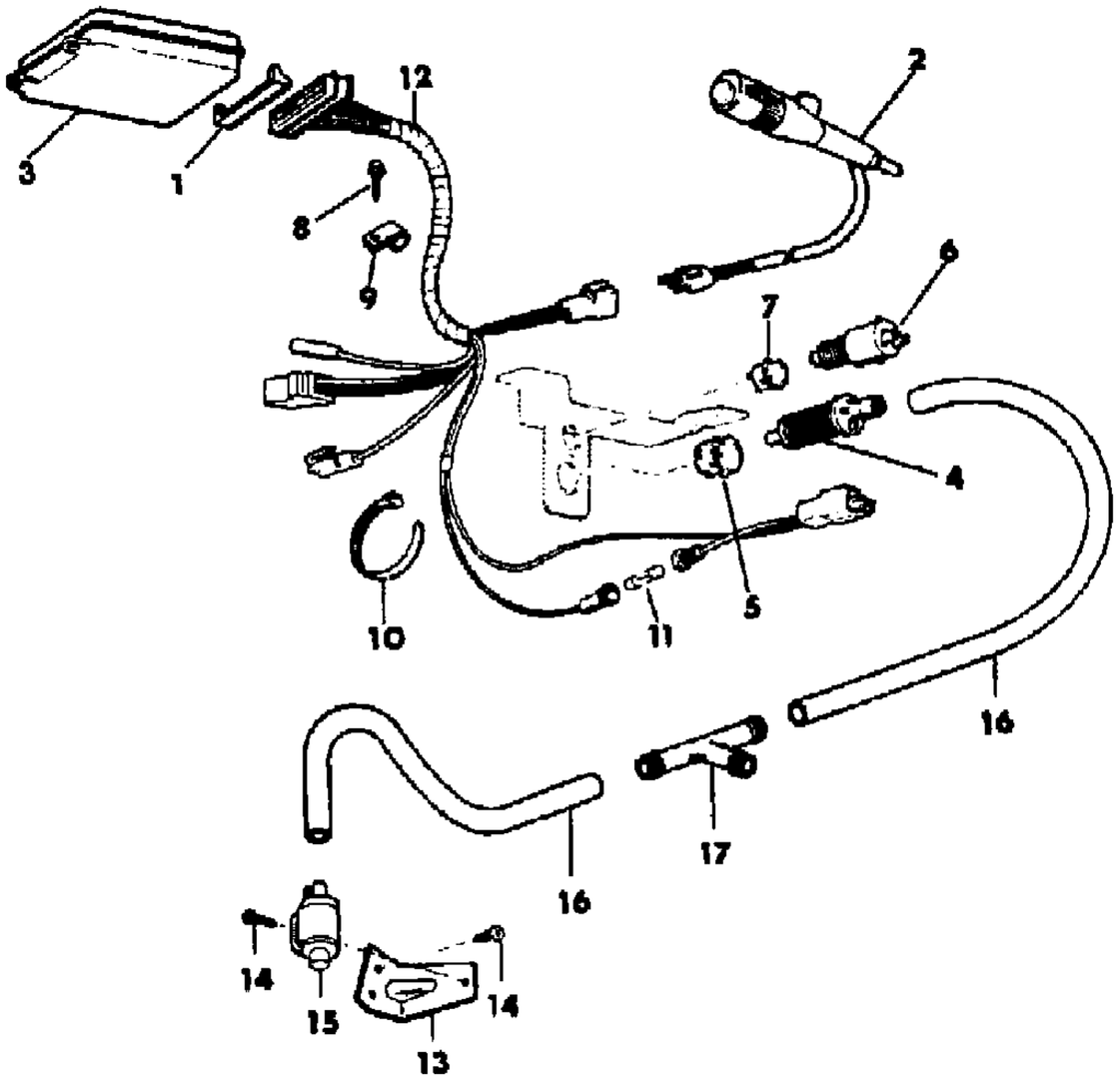

ITEM	PART NUMBER	QTY	BODY	MODEL	DESCRIPTION
1	5300 4158	1			RETAINER, Harness
2					LEVER, Turn Signal
	J323 7116	1			1981: Six Cylinder
	J322 6524	1			1981: Eight Cylinder
	J323 7116	1			1982-85
	5600 0034	1			1986
3					REGULATOR
					Six Cylinder
	J323 7117	1			1981-85
	5300 3973	1			1986
					Eight Cylinder
	J323 7117	1			1981
	J576 1770	1			1982-85
	5300 0320	1			1986
4	J323 2970	1			VALVE, Cruise Control Vacuum
5	J400 6789	1			CLIP, Valve
6	J535 2620	1			SWITCH, Stop, Lamp
7	J535 2622	1			RETAINER
8	J400 6630	1			SCREW
9	J012 0526	1			CLIP
10	J322 3227	1			STRAP
11	J813 2908	1			FUSE
12					HARNESS
	J575 7442	1			1981: Six Cylinder
	J576 2580	1			1982-85: With Manual Transmission
	J576 2560	1			1982-85: With Automatic Transmission
	5600 2122	1			1986: With Manual Transmission
	5600 2025	1			1986: With Automatic Transmission
13	J536 4007	1			BRACKET
14	J400 4994	3			SCREW
15	J576 1946	1			VALVE, Cruise Control Vacuum
16	J812 5814	1			HOSE
17	J400 6635	1			TEE

MODEL CODES
16=Cherokee 2 Dr.(1981-83)
17=Cherokee 2 Dr.(1981-83)
73=Cherokee 2WD-2 Dr.(1984-86)
74=Cherokee 2WD-4 Dr.(1984-86)
18=Cherokee 4 Dr.(1981-83)
77=Cherokee 4WD-2 Dr.(1984-86)
78=Cherokee 4WD-4 Dr.(1984-86)
85=CJ-5 (1981-83)
86=CJ-6(1981)
87=CJ-7(1981-86)
88=CJ-8, Scrambler(1981-86)
64=Comanche 2WD-6 Ft. Box(1986)
66=Comanche 2WD-7 Ft. Box(1986)
63=Comanche 4WD-6 Ft. Box(1986)
65=Comanche 4WD-7 Ft. Box(1986)
15=Grand Wagoneer 4 Dr.(1984-86)
25=J-10 Truck 7 Ft. Box(1981-84)
26=J10 Truck 8 Ft. Box(1981-86)
27=J-20 Truck 8 Ft. Box(1981-86)
15=Wagoneer 4 Dr.(1981-83)
75=Wagoneer 4WD-4 Dr.(1984-86)

BODY
CJ=CJ-5, CJ-6, CJ-7, CJ-8, Scrambler(1981-86)
MJ=Comanche Pickup(1986)

STYLES
SJ=Wagoneer(1981-83), Grand Wagoneer(1984-86), Cherokee(1981-83), J-10, J-20(1981-86)
XJ=Wagoneer(1984-86), Cherokee(1984-86)

AR = Use as Required - = Non Illustrated Part P.A.R. = Paint as Required

« RETURN TO GROUP INDEX

FUEL PUMP AND FILTER SIX CYLINDER SJ CHEROKEE, SJ WAGONEER, J10, J20
Figure 14-7600

81J14 7600

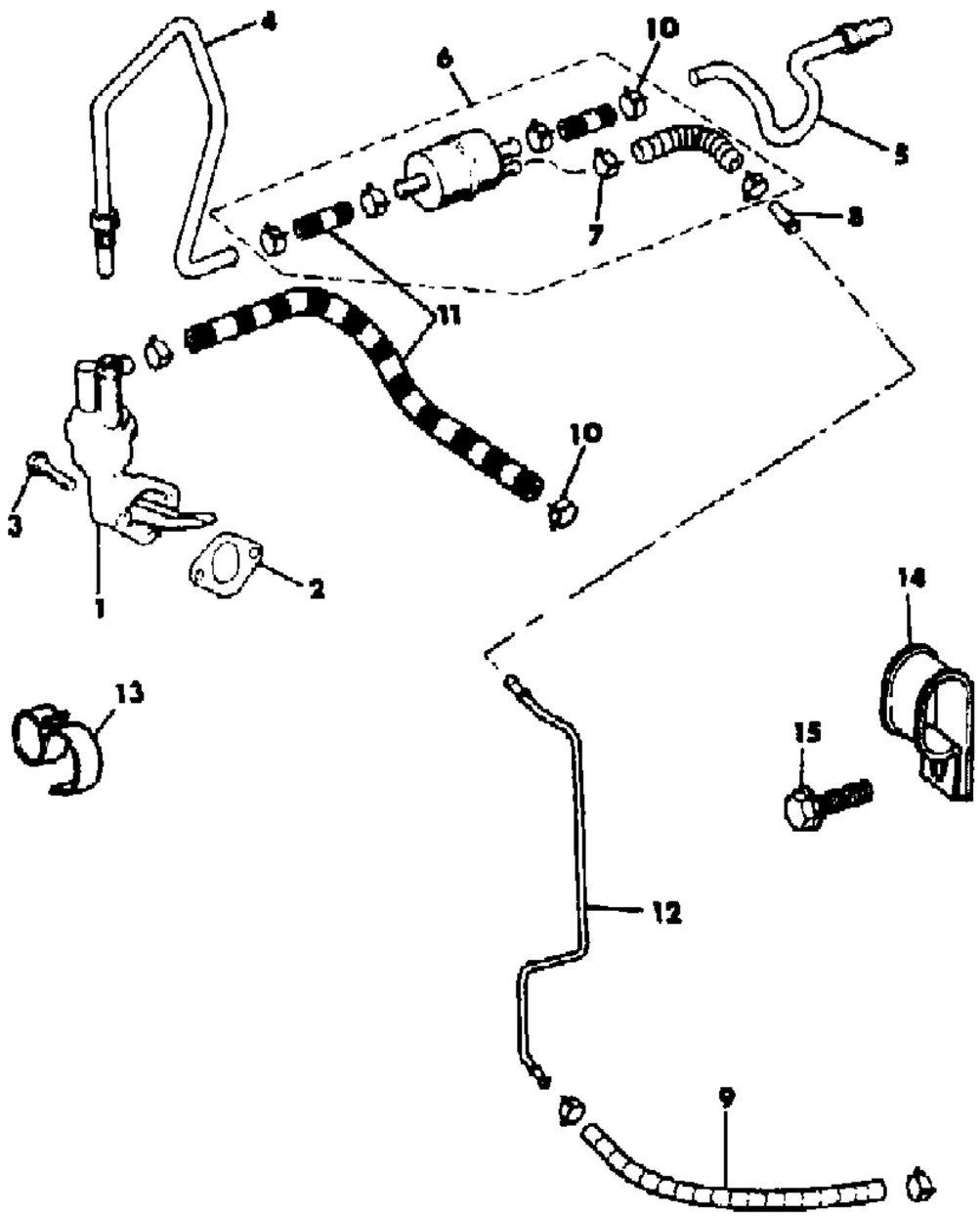

ITEM	PART NUMBER	QTY	BODY	MODEL	DESCRIPTION
1	J324 0172	1			PUMP, Fuel
2	J317 4685	1			GASKET, Fuel Pump
3	J018 0079	2			BOLT
4	3300 2617	1			TUBE, Fuel Supply
5	3300 2618	1			TUBE, Fuel Supply
6	J812 9383	1			FILTER PACKAGE, Fuel
7	J322 2900	AR			CLAMP
8	J323 2144	1			VALVE
9	J812 5843	AR			HOSE, Bulk
10	J318 1643	AR			CLAMP
11	J812 5823	AR			HOSE, Bulk
12	J536 2848	1			TUBE, Fuel Return
13	J400 4928	1			CLIP
14	J012 6166	1			CLIP
15	J027 4882	1			SCREW

MODEL CODES

16=Cherokee 2 Dr.(1981-83)
17=Cherokee 2 Dr.(1981-83)
73=Cherokee 2WD-2 Dr.(1984-86)
74=Cherokee 2WD-4 Dr.(1984-86)
18=Cherokee 4 Dr.(1981-83)
77=Cherokee 4WD-2 Dr.(1984-86)
78=Cherokee 4WD-4 Dr.(1984-86)
85=CJ-5 (1981-83)
86=CJ-6(1981)
87=CJ-7(1981-86)
88=CJ-8, Scrambler(1981-86)
64=Comanche 2WD-6 Ft. Box(1986)
66=Comanche 2WD-7 Ft. Box(1986)
63=Comanche 4WD-6 Ft. Box(1986)
65=Comanche 4WD-7 Ft. Box(1986)
15=Grand Wagoneer 4 Dr.(1984-86)
25=J-10 Truck 7 Ft. Box(1981-84)
26=J10 Truck 8 Ft. Box(1981-86)
27=J-20 Truck 8 Ft. Box(1981-86)
15=Wagoneer 4 Dr.(1981-83)
75=Wagoneer 4WD-4 Dr.(1984-86)

BODY
CJ=CJ-5, CJ-6, CJ-7, CJ-8, Scrambler(1981-86)
MJ=Comanche Pickup(1986)

STYLES
SJ=Wagoneer(1981-83), Grand Wagoneer(1984-86), Cherokee(1981-83), J-10, J-20(1981-86)
XJ=Wagoneer(1984-86), Cherokee(1984-86)

AR = Use as Required - = Non Illustrated Part P.A.R. = Paint as Required

« RETURN TO GROUP INDEX

FUEL PUMP AND FILTER EIGHT CYLINDER SJ CHEROKEE, SJ WAGONEER, J10, J20
Figure 14-7700

81J14 7700

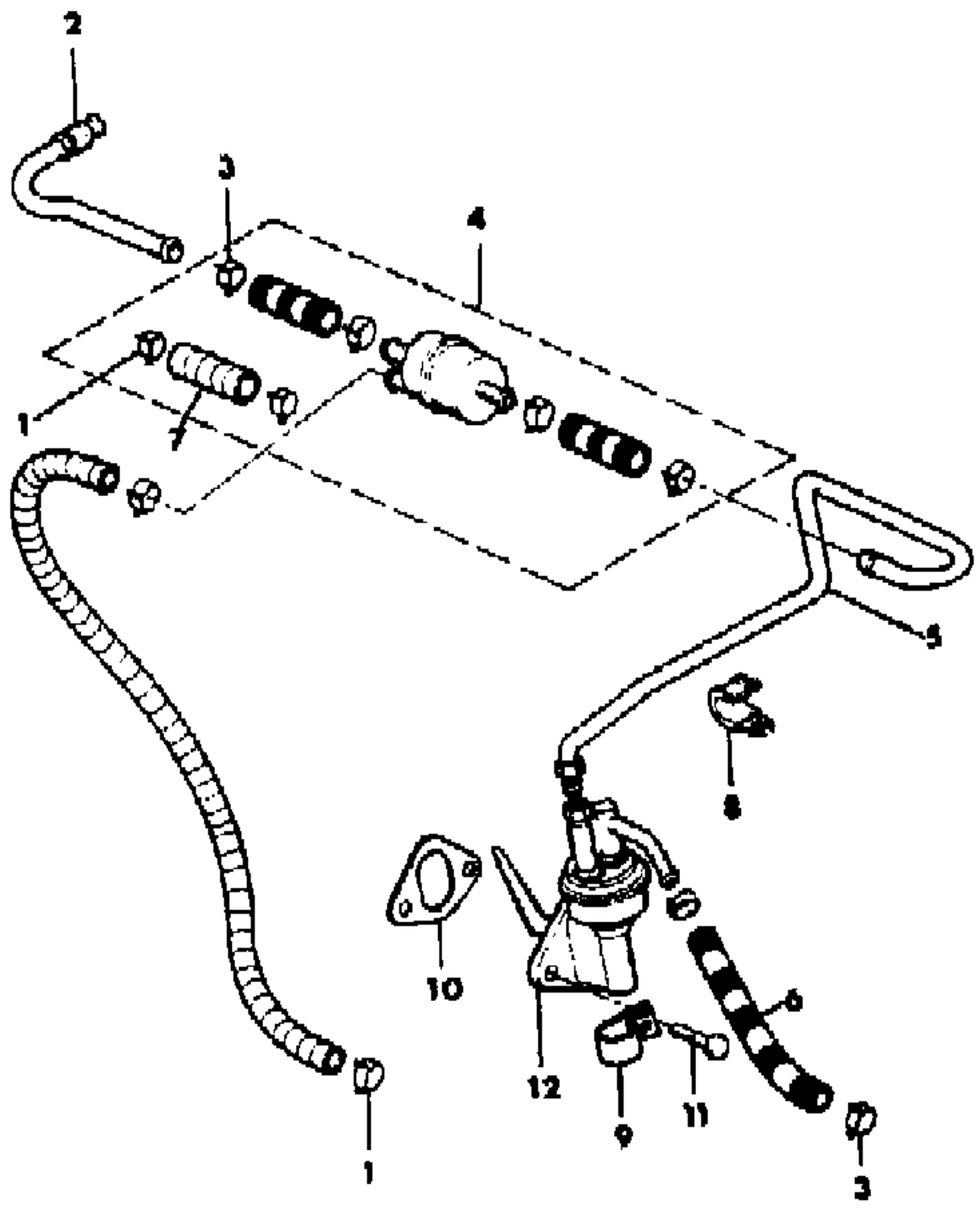

ITEM	PART NUMBER	QTY	BODY	MODEL	DESCRIPTION
1	J322 2900	2			CLAMP, Hose
2					TUBE, Fuel Supply
	J321 3836	1			1981-85
	5300 4058	1			1986
3	J318 1643	6			CLAMP, Hose
4	J812 9383	1			FILTER PACKAGE, Fuel
5					TUBE, Fuel Supply
	J322 8198	1			1981-85
	5300 4057	1			1986
6	J812 5823	1			HOSE, Bulk
7	J812 5843	1			HOSE, Bulk
8	J535 0435	1			CLIP
9	J012 8302	1			CLIP
10	J317 4685	1			GASKET, Fuel Pump
11	J018 0125	2			BOLT
12	J322 8195	1			PUMP, Fuel

MODEL CODES

16=Cherokee 2 Dr.(1981-83)
17=Cherokee 2 Dr.(1981-83)
73=Cherokee 2WD-2 Dr.(1984-86)
74=Cherokee 2WD-4 Dr.(1984-86)
18=Cherokee 4 Dr.(1981-83)
77=Cherokee 4WD-2 Dr.(1984-86)
78=Cherokee 4WD-4 Dr.(1984-86)
85=CJ-5 (1981-83)
86=CJ-6(1981)
87=CJ-7(1981-86)
88=CJ-8, Scrambler(1981-86)
64=Comanche 2WD-6 Ft. Box(1986)
66=Comanche 2WD-7 Ft. Box(1986)
63=Comanche 4WD-6 Ft. Box(1986)
65=Comanche 4WD-7 Ft. Box(1986)
15=Grand Wagoneer 4 Dr.(1984-86)
25=J-10 Truck 7 Ft. Box(1981-84)
26=J10 Truck 8 Ft. Box(1981-86)
27=J-20 Truck 8 Ft. Box(1981-86)
15=Wagoneer 4 Dr.(1981-83)
75=Wagoneer 4WD-4 Dr.(1984-86)

BODY

CJ=CJ-5, CJ-6, CJ-7, CJ-8, Scrambler(1981-86)
MJ=Comanche Pickup(1986)

STYLES

SJ=Wagoneer(1981-83), Grand Wagoneer(1984-86), Cherokee(1981-83), J-10, J-20(1981-86)
XJ=Wagoneer(1984-86), Cherokee(1984-86)

AR = Use as Required - = Non Illustrated Part P.A.R. = Paint as Required

« RETURN TO GROUP INDEX

FUEL LINES SIX, EIGHT CYLINDER SJ CHEROKEE, SJ WAGONEER, J10, J20
Figure 14-7800

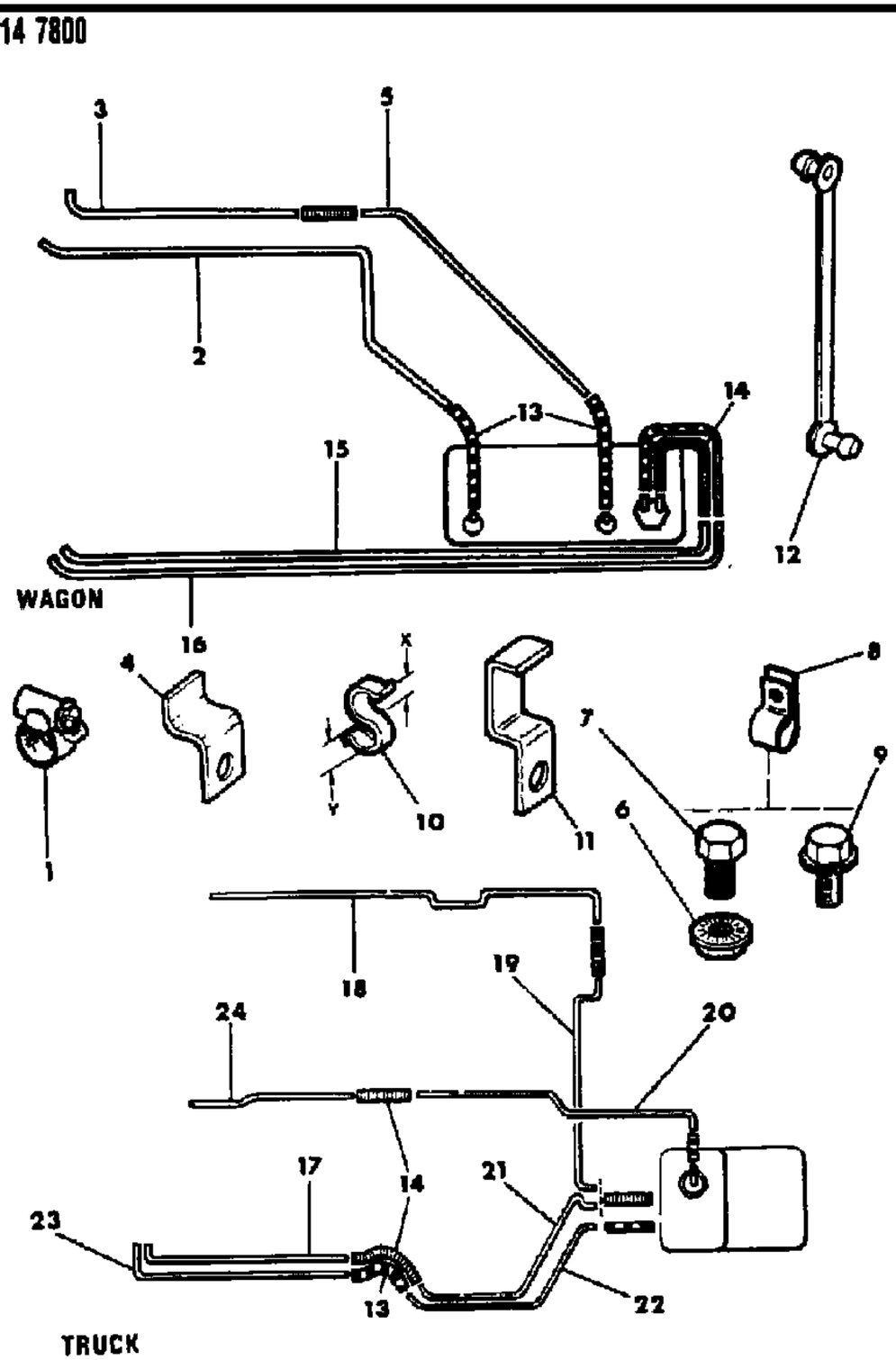

ITEM	PART NUMBER	QTY	BODY	MODEL	DESCRIPTION
1					CLAMP, Hose
	3300 0785	AR			.47" Thru .78"
	3300 0786	AR			.28" Thru .59"
2	J536 1733	1			TUBE, Vent
3					TUBE, Vent
	J536 1556	1			1981: Six Cylinder, with Manual Transmission
	J536 1554	1			1981: Automatic Transmission, with Part Time Unit
	J536 1555	1			1981-82: Automatic Transmission, with Full Time Unit
	J536 1554	1			1981-86: Eight Cylinder, with Five Speed Transmission
	J536 3385	1			1982-86: Six Cylinder, with Four Speed Transmission
	J536 3384	1			1982-86: Six Cylinder, with Automatic Transmission, with Part Time Unit
	J536 1554	1			1982-86: Eight Cylinder, with Automatic Transmission, without Selec-Trac
	J536 3386	1			1983-86: Six Cylinder, with Automatic Transmission, with Selec-Trac
	J536 1555	1			1983-86: Eight Cylinder, with Automatic Transmission, with Selec-Trac
4					CLIP
	J536 4175	1			1983: Six Cylinder
5					TUBE, Vent
	J536 1582	1			1981
	J536 3405	1			1982-86: Six Cylinder, with Five Speed Transmission
	J536 4188	1			1982-86: Without Six Cylinder, Five Speed Transmission
6	J400 3587	AR			NUT
7	J018 0075	AR			BOLT
8					CLIP
	J012 0522	AR			.28" Dia. Hole
	J019 2107	AR			.34" Dia. Hole
	J017 9148	AR			.38" Dia. Hole
9					SCREW
	J942 6241	AR			.25"
	J400 5063	AR			.31"
	J400 4626	AR			.38"
10					CLIP, S-Type
	J400 0021	AR			X=.30", Y=.30"
	J400 4928	AR			X=.24", Y=.30"
	J080 0743	AR			X=.24", Y=.24", Six, Eight Cylinder
11	J400 4901	AR			CLIP

MODEL CODES

16=Cherokee 2 Dr.(1981-83)
17=Cherokee 2 Dr.(1981-83)
73=Cherokee 2WD-2 Dr.(1984-86)
74=Cherokee 2WD-4 Dr.(1984-86)
18=Cherokee 4 Dr.(1981-83)
77=Cherokee 4WD-2 Dr.(1984-86)
78=Cherokee 4WD-4 Dr.(1984-86)
85=CJ-5 (1981-83)
86=CJ-6(1981)
87=CJ-7(1981-86)
88=CJ-8, Scrambler(1981-86)
64=Comanche 2WD-6 Ft. Box(1986)
66=Comanche 2WD-7 Ft. Box(1986)
63=Comanche 4WD-6 Ft. Box(1986)
65=Comanche 4WD-7 Ft. Box(1986)
15=Grand Wagoneer 4 Dr.(1984-86)
25=J-10 Truck 7 Ft. Box(1981-84)
26=J10 Truck 8 Ft. Box(1981-86)
27=J-20 Truck 8 Ft. Box(1981-86)
15=Wagoneer 4 Dr.(1981-83)
75=Wagoneer 4WD-4 Dr.(1984-86)

BODY

CJ=CJ-5, CJ-6, CJ-7, CJ-8, Scrambler(1981-86)
MJ=Comanche Pickup(1986)

STYLES

SJ=Wagoneer(1981-83), Grand Wagoneer(1984-86), Cherokee(1981-83), J-10, J-20(1981-86)
XJ=Wagoneer(1984-86), Cherokee(1984-86)

AR = Use as Required - = Non Illustrated Part P.A.R. = Paint as Required

FUEL LINES SIX, EIGHT CYLINDER SJ CHEROKEE, SJ WAGONEER, J10, J20
Figure 14-7800

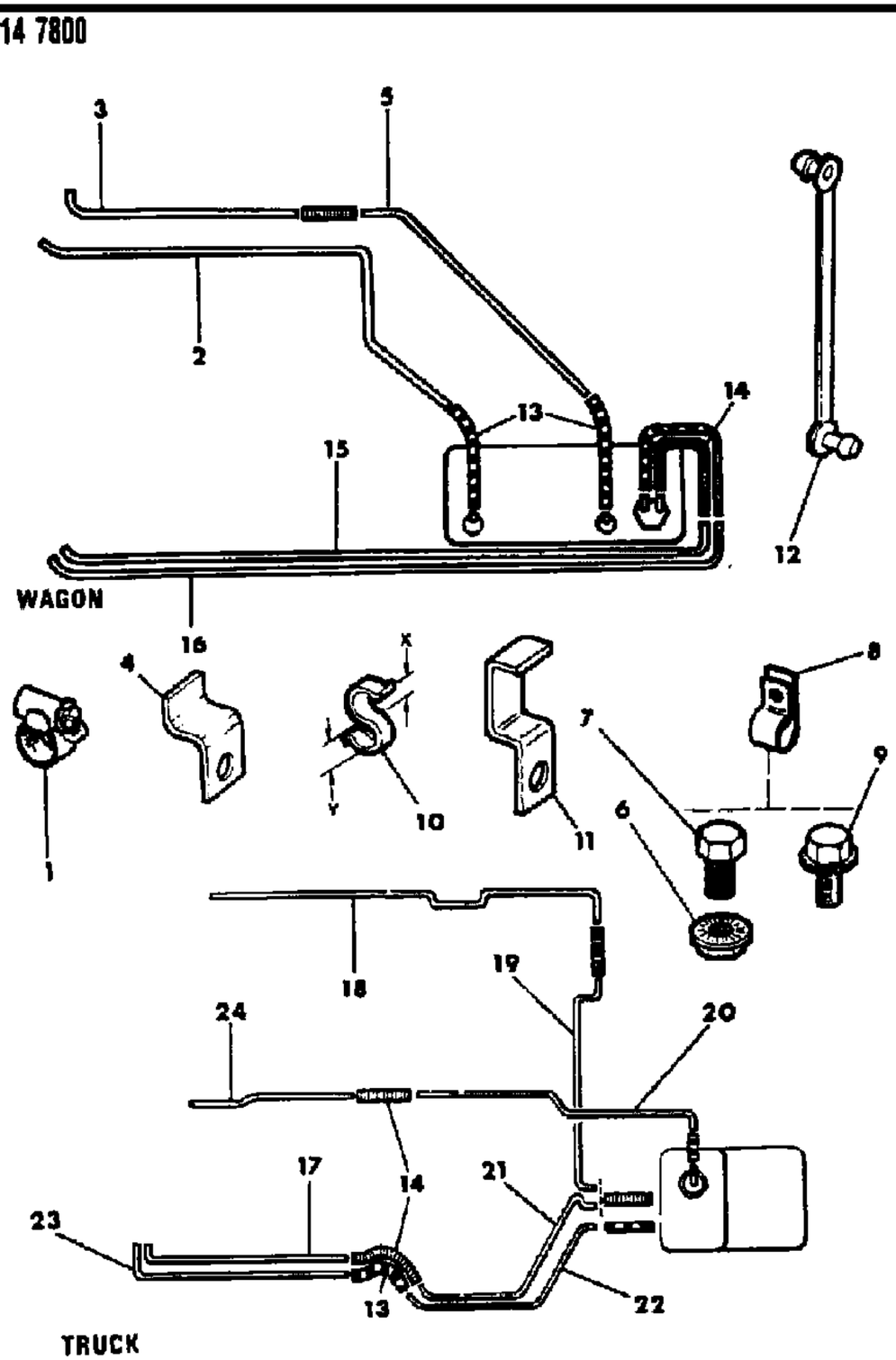

ITEM	PART NUMBER	QTY	BODY	MODEL	DESCRIPTION
12	J400 1712	1			FASTENER
13	J812 5843	AR			HOSE, Bulk
14	J812 5823	AR			HOSE, Bulk
15					TUBE, Fuel Supply
					Six Cylinder
	J536 1192	1			1981-85
	5300 2555	1			1986
					Eight Cylinder
	J536 1195	1			1981-85
	5300 2559	1			1986
16					TUBE, Fuel Return
	J536 1194	1			1981-85: Front
	5300 2557	1			1986: Front
	J536 1199	1			1981-86: Rear
17					TUBE, Fuel Supply
					Eight Cylinder
	J535 7793	1			1981-85
	5300 2560	1			1986
18					TUBE, Fuel Supply
					Six Cylinder
	J535 7965	1			1981-85
	5300 2556	1			1986
19					TUBE, Fuel Supply
					Six Cylinder
	J536 1196	1			1981-85
	5300 2561	1			1986
20					TUBE, Fuel Vent
	J536 3387	1			Six Cylinder
	J536 1738	1			Eight Cylinder
21					TUBE, Fuel Supply
					Eight Cylinder
	J536 1198	1			1981-85
	5300 2562	1			1986
22					TUBE, Fuel Return
	J536 1215	1			1981-85
	5300 2563	1			1986
23					TUBE, Fuel Return
23	J535 8535	1			1981-85
	5300 2558	1			1986

MODEL CODES

16=Cherokee 2 Dr.(1981-83)
17=Cherokee 2 Dr.(1981-83)
73=Cherokee 2WD-2 Dr.(1984-86)
74=Cherokee 2WD-4 Dr.(1984-86)
18=Cherokee 4 Dr.(1981-83)
77=Cherokee 4WD-2 Dr.(1984-86)
78=Cherokee 4WD-4 Dr.(1984-86)
85=CJ-5 (1981-83)
86=CJ-6(1981)
87=CJ-7(1981-86)
88=CJ-8, Scrambler(1981-86)
64=Comanche 2WD-6 Ft. Box(1986)
66=Comanche 2WD-7 Ft. Box(1986)
63=Comanche 4WD-6 Ft. Box(1986)
65=Comanche 4WD-7 Ft. Box(1986)
15=Grand Wagoneer 4 Dr.(1984-86)
25=J-10 Truck 7 Ft. Box(1981-84)
26=J10 Truck 8 Ft. Box(1981-86)
27=J-20 Truck 8 Ft. Box(1981-86)
15=Wagoneer 4 Dr.(1981-83)
75=Wagoneer 4WD-4 Dr.(1984-86)

BODY
CJ=CJ-5, CJ-6, CJ-7, CJ-8, Scrambler(1981-86)
MJ=Comanche Pickup(1986)

STYLES
SJ=Wagoneer(1981-83), Grand Wagoneer(1984-86), Cherokee(1981-83), J-10, J-20(1981-86)
XJ=Wagoneer(1984-86), Cherokee(1984-86)

AR = Use as Required - = Non Illustrated Part P.A.R. = Paint as Required

FUEL LINES SIX, EIGHT CYLINDER SJ CHEROKEE, SJ WAGONEER, J10, J20
Figure 14-7800

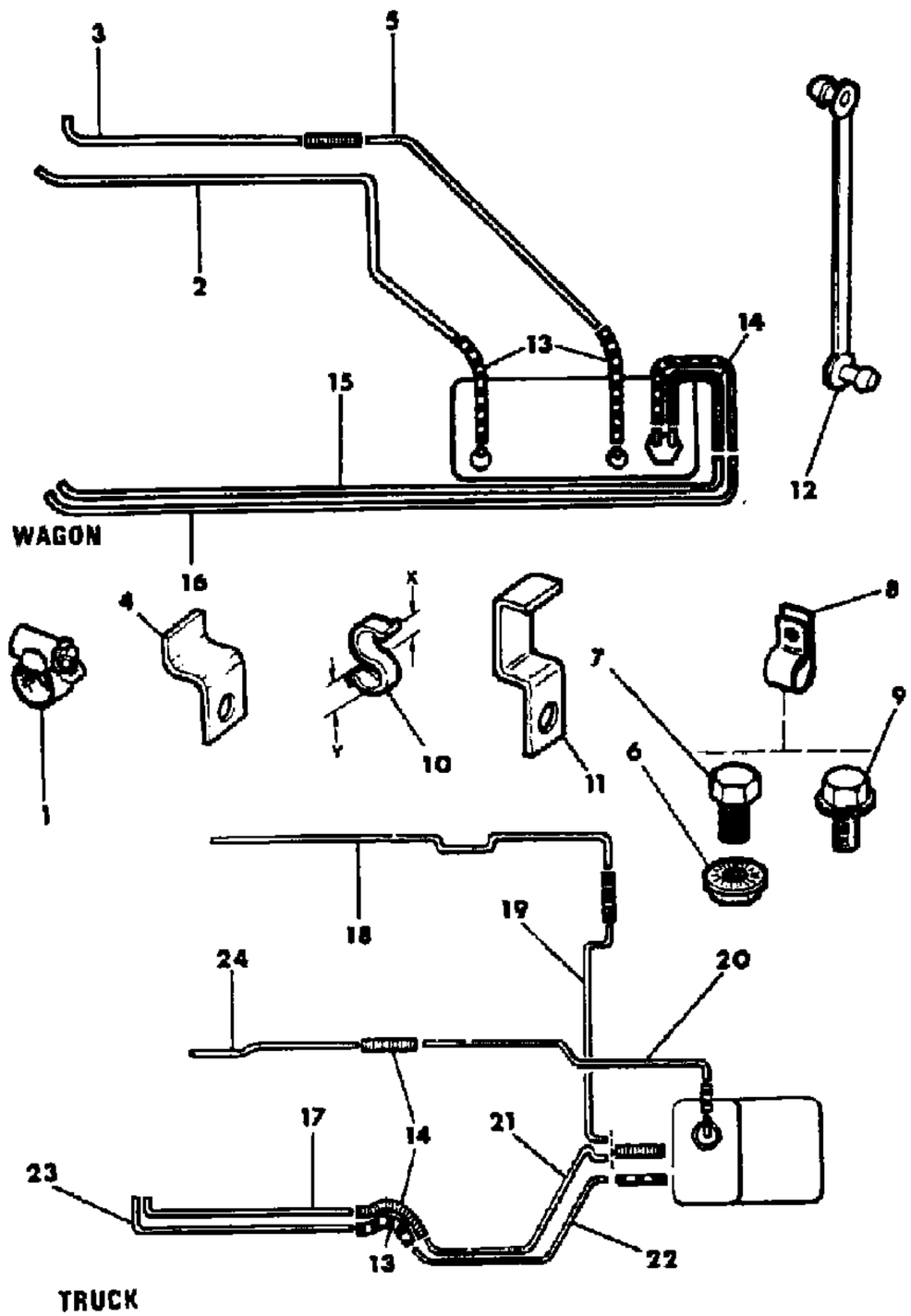

ITEM	PART NUMBER	QTY	BODY	MODEL	DESCRIPTION
24					TUBE, Fuel Vent
	J536 3388	1			Six Cylinder
	J536 1733	1			Eight Cylinder

MODEL CODES

16=Cherokee 2 Dr.(1981-83)
17=Cherokee 2 Dr.(1981-83)
73=Cherokee 2WD-2 Dr.(1984-86)
74=Cherokee 2WD-4 Dr.(1984-86)
18=Cherokee 4 Dr.(1981-83)
77=Cherokee 4WD-2 Dr.(1984-86)
78=Cherokee 4WD-4 Dr.(1984-86)
85=CJ-5 (1981-83)
86=CJ-6(1981)
87=CJ-7(1981-86)
88=CJ-8, Scrambler(1981-86)
64=Comanche 2WD-6 Ft. Box(1986)
66=Comanche 2WD-7 Ft. Box(1986)
63=Comanche 4WD-6 Ft. Box(1986)
65=Comanche 4WD-7 Ft. Box(1986)
15=Grand Wagoneer 4 Dr.(1984-86)
25=J-10 Truck 7 Ft. Box(1981-84)
26=J10 Truck 8 Ft. Box(1981-86)
27=J-20 Truck 8 Ft. Box(1981-86)
15=Wagoneer 4 Dr.(1981-83)
75=Wagoneer 4WD-4 Dr.(1984-86)

BODY
CJ=CJ-5, CJ-6, CJ-7, CJ-8, Scrambler(1981-86)
MJ=Comanche Pickup(1986)

STYLES
SJ=Wagoneer(1981-83), Grand Wagoneer(1984-86), Cherokee(1981-83), J-10, J-20(1981-86)
XJ=Wagoneer(1984-86), Cherokee(1984-86)

AR = Use as Required - = Non Illustrated Part P.A.R. = Paint as Required

« RETURN TO GROUP INDEX

FUEL TANK SJ CHEROKEE, SJ WAGONEER
Figure 14-7900

81J14 7900

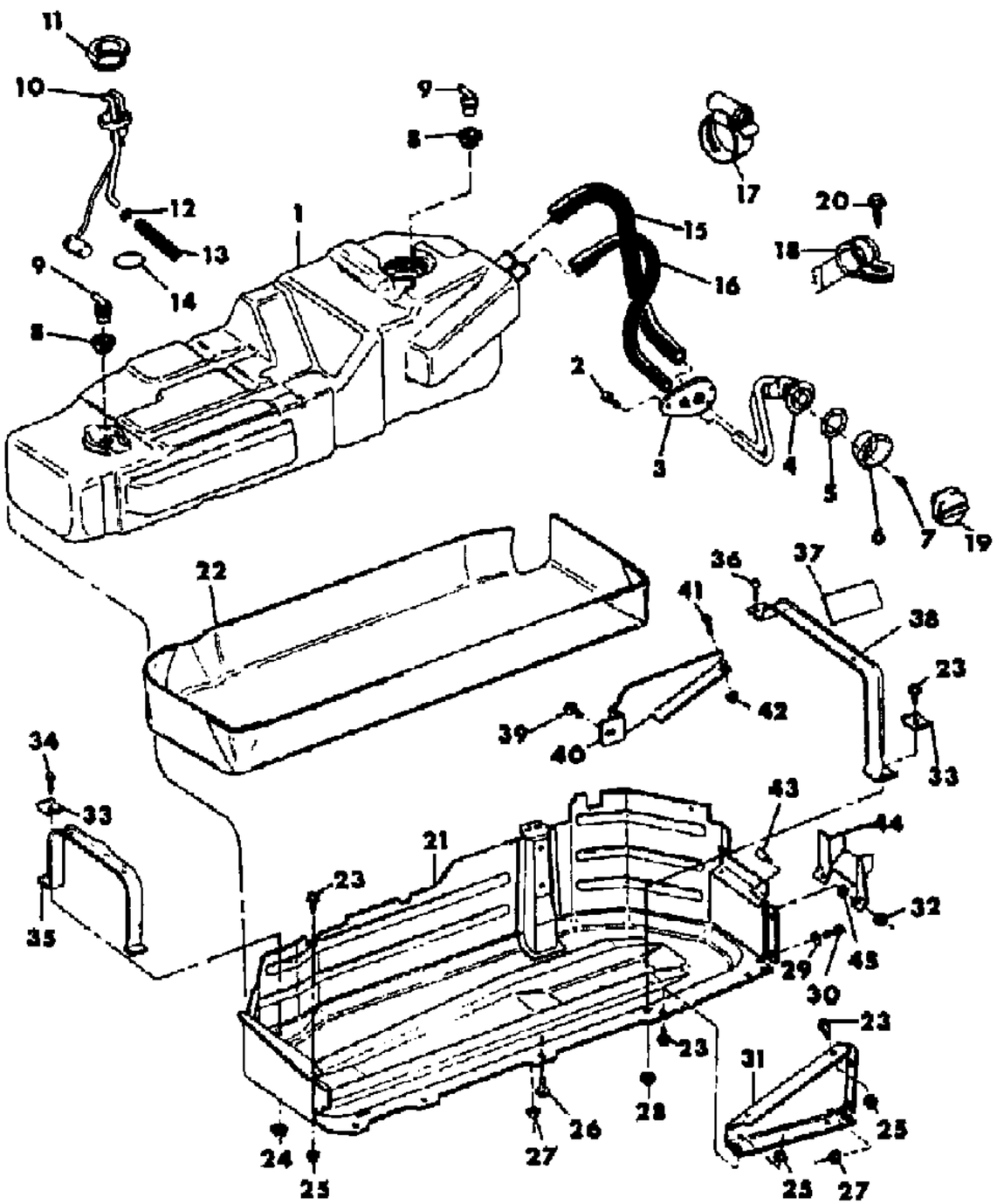

ITEM	PART NUMBER	QTY	BODY	MODEL	DESCRIPTION
1	J536 2496	1			TANK, Fuel
2	J812 0056	3			SCREW
3	J535 8610	1			GROMMET
4					TUBE, Air Filler
	J536 4763	1			Vehicles equipped to use Unleaded Fuel
	J536 3315	1			Vehicles equipped to use Leaded Fuel
5	J093 6433	1			GASKET
6					BEZEL
	J536 3394	1			Vehicles equipped to use Unleaded Fuel
	J536 3395	1			Vehicles equipped to use Leaded Fuel
7	J400 6871	6			SCREW
8	J536 0059	2			SEAL
9	J536 2541	2			VALVE
10					SENDOR, Fuel ***
	J536 3490	1			1981-85
	5300 3099	1			1986
11	J537 0014	1			LOCK
12	3300 0786	1			CLAMP, Hose
13	J536 1389	1			FILTER, Fuel
14	J094 1521	1			O-RING
15	J536 1183	1			HOSE, Filler
16	J536 1184	1			HOSE, Vent
17	J320 3077	4			CLAMP, Hose
18					CLIP
	J400 3838	2			X=1.06"
	J400 6793	1			X=1.50"
19					CAP, Fuel Filler, Non-Locking
	J536 1474	1			1981
	5200 3768	1			1982-85: US
	5200 3766	1			1986: US
	J535 0897	1			Australian Design Rules
	5200 3767	1			CANADA
	5200 3768	1			Non-Regulated Markets
20	J943 1948	AR			SCREW
21	J536 1590	1			PLATE, Skid
22	J536 2004	1			PAD, Fuel Tank
23	J027 3773	6			BOLT
24	J400 4005	1			NUT, Lock
25	J400 5895	5			NUT

MODEL CODES

16=Cherokee 2 Dr.(1981-83)
17=Cherokee 2 Dr.(1981-83)
73=Cherokee 2WD-2 Dr.(1984-86)
74=Cherokee 2WD-4 Dr.(1984-86)
18=Cherokee 4 Dr.(1981-83)
77=Cherokee 4WD-2 Dr.(1984-86)
78=Cherokee 4WD-4 Dr.(1984-86)
85=CJ-5 (1981-83)
86=CJ-6(1981)
87=CJ-7(1981-86)
88=CJ-8, Scrambler(1981-86)
64=Comanche 2WD-6 Ft. Box(1986)
66=Comanche 2WD-7 Ft. Box(1986)
63=Comanche 4WD-6 Ft. Box(1986)
65=Comanche 4WD-7 Ft. Box(1986)
15=Grand Wagoneer 4 Dr.(1984-86)
25=J-10 Truck 7 Ft. Box(1981-84)
26=J10 Truck 8 Ft. Box(1981-86)
27=J-20 Truck 8 Ft. Box(1981-86)
15=Wagoneer 4 Dr.(1981-83)
75=Wagoneer 4WD-4 Dr.(1984-86)

BODY
CJ=CJ-5, CJ-6, CJ-7, CJ-8, Scrambler(1981-86)
MJ=Comanche Pickup(1986)

STYLES
SJ=Wagoneer(1981-83), Grand Wagoneer(1984-86), Cherokee(1981-83), J-10, J-20(1981-86)
XJ=Wagoneer(1984-86), Cherokee(1984-86)

AR = Use as Required - = Non Illustrated Part P.A.R. = Paint as Required

« RETURN TO GROUP INDEX »

FUEL TANK SJ CHEROKEE, SJ WAGONEER
Figure 14-7900

81J14 7900

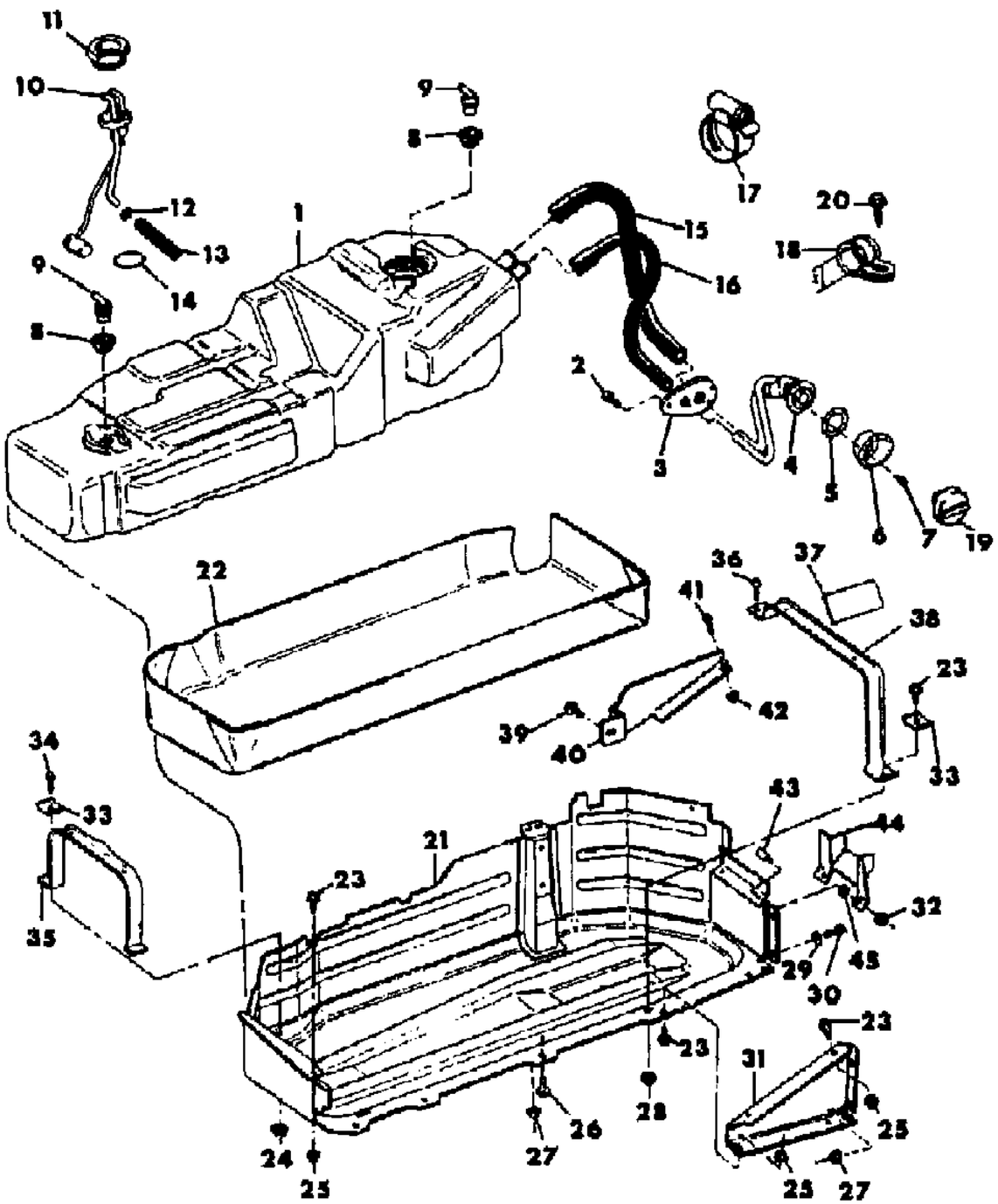

ITEM	PART NUMBER	QTY	BODY	MODEL	DESCRIPTION
26	J400 4626	3			SCREW
27	J400 3587	4			NUT, Lock
28	J400 4008	1			NUT, Lock
29	J012 0393	2			WASHER
30	J018 0075	2			BOLT
31	J536 1268	1			BRACKET
32	J941 6918	2			NUT, Lock
33	J535 6417	2			PLATE
34	J942 4069	1			BOLT
35	J536 1271	1			STRAP, Front
36	J400 5673	2			SCREW
37	5200 2895	1			PAD, Strap
38	J536 1269	1			STRAP, Rear
39	J400 5063	1			SCREW
40	J536 1629	1			SHIELD
41	J018 0016	1			BOLT
42	J941 6918	1			NUT, Lock
43	J400 5681	2			SCREW, T-Head
44	J536 1592	1			SHIELD
45	J400 5041	2			NUT, Push

MODEL CODES

16=Cherokee 2 Dr.(1981-83)
17=Cherokee 2 Dr.(1981-83)
73=Cherokee 2WD-2 Dr.(1984-86)
74=Cherokee 2WD-4 Dr.(1984-86)
18=Cherokee 4 Dr.(1981-83)
77=Cherokee 4WD-2 Dr.(1984-86)
78=Cherokee 4WD-4 Dr.(1984-86)
85=CJ-5 (1981-83)
86=CJ-6(1981)
87=CJ-7(1981-86)
88=CJ-8, Scrambler(1981-86)
64=Comanche 2WD-6 Ft. Box(1986)
66=Comanche 2WD-7 Ft. Box(1986)
63=Comanche 4WD-6 Ft. Box(1986)
65=Comanche 4WD-7 Ft. Box(1986)
15=Grand Wagoneer 4 Dr.(1984-86)
25=J-10 Truck 7 Ft. Box(1981-84)
26=J10 Truck 8 Ft. Box(1981-86)
27=J-20 Truck 8 Ft. Box(1981-86)
15=Wagoneer 4 Dr.(1981-83)
75=Wagoneer 4WD-4 Dr.(1984-86)

BODY
CJ=CJ-5, CJ-6, CJ-7, CJ-8, Scrambler(1981-86)
MJ=Comanche Pickup(1986)

STYLES
SJ=Wagoneer(1981-83), Grand Wagoneer(1984-86), Cherokee(1981-83), J-10, J-20(1981-86)
XJ=Wagoneer(1984-86), Cherokee(1984-86)

AR = Use as Required - = Non Illustrated Part P.A.R. = Paint as Required

« RETURN TO GROUP INDEX

«

FUEL TANK J10, J20
Figure 14-8000

81J14 8000

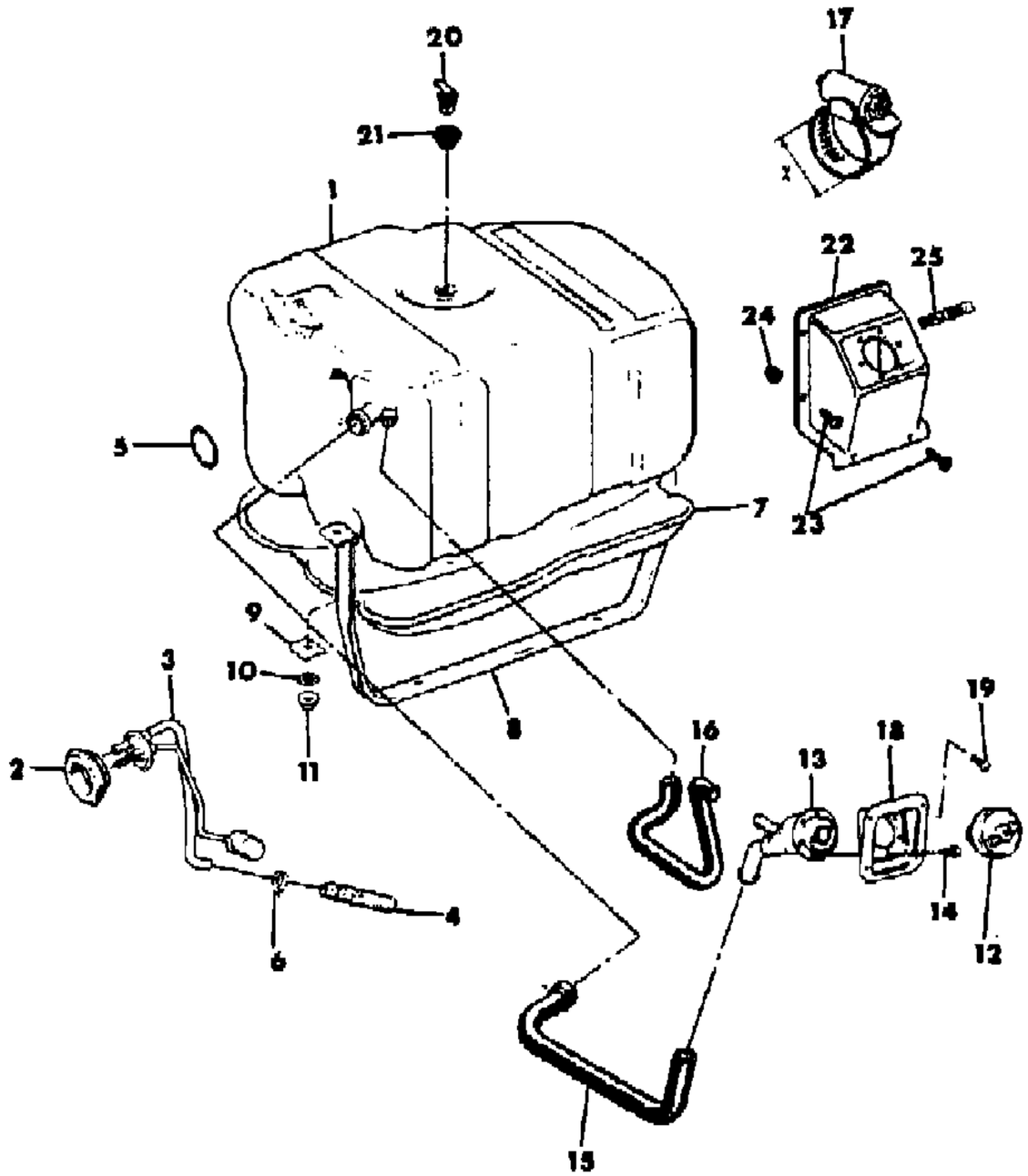

ITEM	PART NUMBER	QTY	BODY	MODEL	DESCRIPTION
1	J536 2499	1			TANK, Fuel
2	J537 0014	1			LOCK
3					SENDER, Fuel ***
	5300 3201	1			Sportside
	J536 3977	1			1984-86
4	J536 1389	1			FILTER, Fuel
5	J094 1521	1			O-RING
6	3300 0786	1			CLAMP, Hose
7	J536 1256	1			SHIELD, Fuel Tank
8	J535 9779	2			STRAP
9	J535 9777	4			REINFORCEMENT
10	J400 3084	4			NUT, Push
11	J400 5895	4			NUT, Lock
12					CAP, Fuel Filler, Non-Locking
	5200 3766	1			US
	5200 3767	1			CANADA
	5200 3768	1			Non-Regulated Markets
13					TUBE, Fuel Filler
	J536 3879	1			1981-83: US, Sportside
	J536 3878	1			1981-83: CANADA, Sportside
	J535 7893	1		25,26	1981-83: CANADA, Townside
	J535 7897	1		27	1981-83: CANADA, Townside
	J536 4762	1			1981-86: US, Townside
	J535 7893	1			1981-86: EXPORT
	J536 4762	1			1984-86: CANADA, Six Cylinder
	J535 7893	1			1984-86: CANADA, Eight Cylinder
14	J812 0054	6			SCREW
15					HOSE, Filler
	J536 1182	1			Townside
	J536 1187	1			1981-83: Sportside
16					HOSE, Vent
	J536 1188	1			Townside
	J536 1190	1			1981-83: Sportside
17					CLAMP, Hose
	J320 3077	3			X=.81" to 1.75"
	J320 3079	AR			X=1.81" to 2.75"
18					PROTECTOR
	J546 3919	1			Vehicles equipped to use Unleaded Fuel
	J546 3920	1			Vehicles equipped to use Leaded Fuel

MODEL CODES

16=Cherokee 2 Dr.(1981-83)
17=Cherokee 2 Dr.(1981-83)
73=Cherokee 2WD-2 Dr.(1984-86)
74=Cherokee 2WD-4 Dr.(1984-86)
18=Cherokee 4 Dr.(1981-83)
77=Cherokee 4WD-2 Dr.(1984-86)
78=Cherokee 4WD-4 Dr.(1984-86)
85=CJ-5 (1981-83)
86=CJ-6(1981)
87=CJ-7(1981-86)
88=CJ-8, Scrambler(1981-86)
64=Comanche 2WD-6 Ft. Box(1986)
66=Comanche 2WD-7 Ft. Box(1986)
63=Comanche 4WD-6 Ft. Box(1986)
65=Comanche 4WD-7 Ft. Box(1986)
15=Grand Wagoneer 4 Dr.(1984-86)
25=J-10 Truck 7 Ft. Box(1981-84)
26=J10 Truck 8 Ft. Box(1981-86)
27=J-20 Truck 8 Ft. Box(1981-86)
15=Wagoneer 4 Dr.(1981-83)
75=Wagoneer 4WD-4 Dr.(1984-86)

BODY
CJ=CJ-5, CJ-6, CJ-7, CJ-8, Scrambler(1981-86)
MJ=Comanche Pickup(1986)

STYLES
SJ=Wagoneer(1981-83), Grand Wagoneer(1984-86), Cherokee(1981-83), J-10, J-20(1981-86)
XJ=Wagoneer(1984-86), Cherokee(1984-86)

AR = Use as Required - = Non Illustrated Part P.A.R. = Paint as Required

81J14 8000

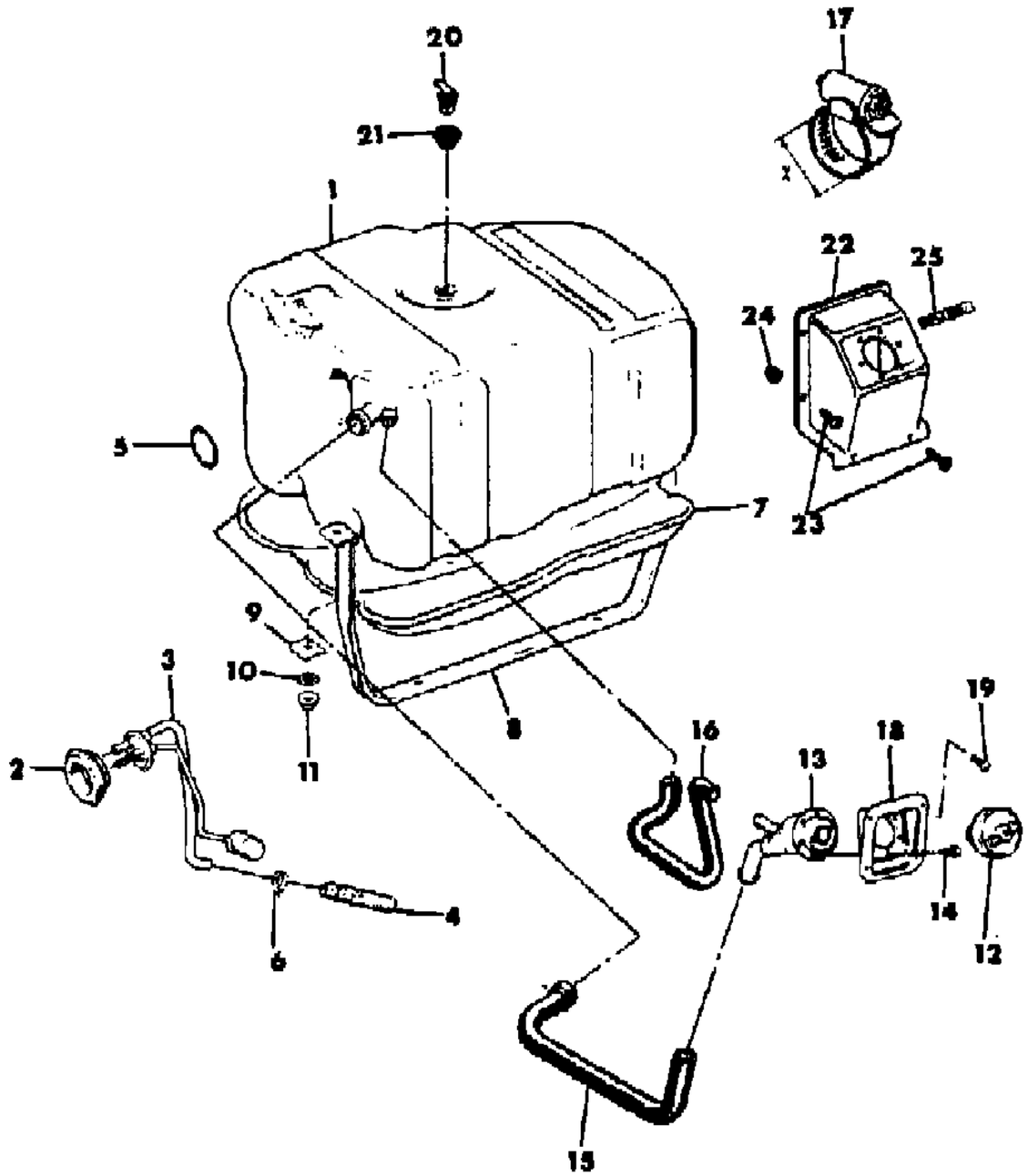

ITEM	PART NUMBER	QTY	BODY	MODEL	DESCRIPTION
19	J400 5817	4			SCREW
20	J536 2541	1			VALVE
21	J536 0059	1			SEAL
22					HOUSING, Fuel Filler
	J575 1963	1			1981-83: Sportside
23					SCREW
	J045 4783	1			1981-83: Sportside
24					NUT
	J027 1166	1			1981-83: Sportside
25	J369 6393	1			LABEL, Unleaded Fuel

MODEL CODES
16=Cherokee 2 Dr.(1981-83)
17=Cherokee 2 Dr.(1981-83)
73=Cherokee 2WD-2 Dr.(1984-86)
74=Cherokee 2WD-4 Dr.(1984-86)
18=Cherokee 4 Dr.(1981-83)
77=Cherokee 4WD-2 Dr.(1984-86)
78=Cherokee 4WD-4 Dr.(1984-86)
85=CJ-5 (1981-83)
86=CJ-6(1981)
87=CJ-7(1981-86)
88=CJ-8, Scrambler(1981-86)
64=Comanche 2WD-6 Ft. Box(1986)
66=Comanche 2WD-7 Ft. Box(1986)
63=Comanche 4WD-6 Ft. Box(1986)
65=Comanche 4WD-7 Ft. Box(1986)
15=Grand Wagoneer 4 Dr.(1984-86)
25=J-10 Truck 7 Ft. Box(1981-84)
26=J10 Truck 8 Ft. Box(1981-86)
27=J-20 Truck 8 Ft. Box(1981-86)
15=Wagoneer 4 Dr.(1981-83)
75=Wagoneer 4WD-4 Dr.(1984-86)

BODY
CJ=CJ-5, CJ-6, CJ-7, CJ-8, Scrambler(1981-86)
MJ=Comanche Pickup(1986)

STYLES
SJ=Wagoneer(1981-83), Grand Wagoneer(1984-86), Cherokee(1981-83), J-10, J-20(1981-86)
XJ=Wagoneer(1984-86), Cherokee(1984-86)

AR = Use as Required - = Non Illustrated Part P.A.R. = Paint as Required

GROUP 16 - PROP. SHAFT AND UNIVERSAL JOINT

ILLUSTRATION TITLE	GROUP-FIG. NO.
FRONT PROPELLER SHAFT CJ-5,6,7,8, SCRAMBLER	Fig. 16-100
FRONT PROPELLER SHAFT STANDARD DUTY XJ CHEROKEE, XJ WAGONEER, COMANCHE	Fig. 16-200
FRONT PROPELLER SHAFT HEAVY DUTY XJ CHEROKEE, XJ WAGONEER, COMANCHE	Fig. 16-300
FRONT PROPELLER SHAFT SJ CHEROKEE, SJ WAGONEER, J10, J20	Fig. 16-400
REAR PROPELLER SHAFT CJ-5,6,7,8, SCRAMBLER	Fig. 16-500
REAR PROPELLER SHAFT 2 WHEEL DRIVE XJ CHEROKEE, XJ WAGONEER, COMANCHE	Fig. 16-600
REAR PROPELLER SHAFT 4 WHEEL DRIVE XJ CHEROKEE, XJ WAGONEER, COMANCHE	Fig. 16-700
REAR PROPELLER SHAFT SJ CHEROKEE, SJ WAGONEER, J10, J20	Fig. 16-800

ILLUSTRATION NOT AVAILABLE AT TIME OF PUBLICATION

FRONT PROPELLER SHAFT CJ-5,6,7,8, SCRAMBLER
Figure 16-100

81J16 100

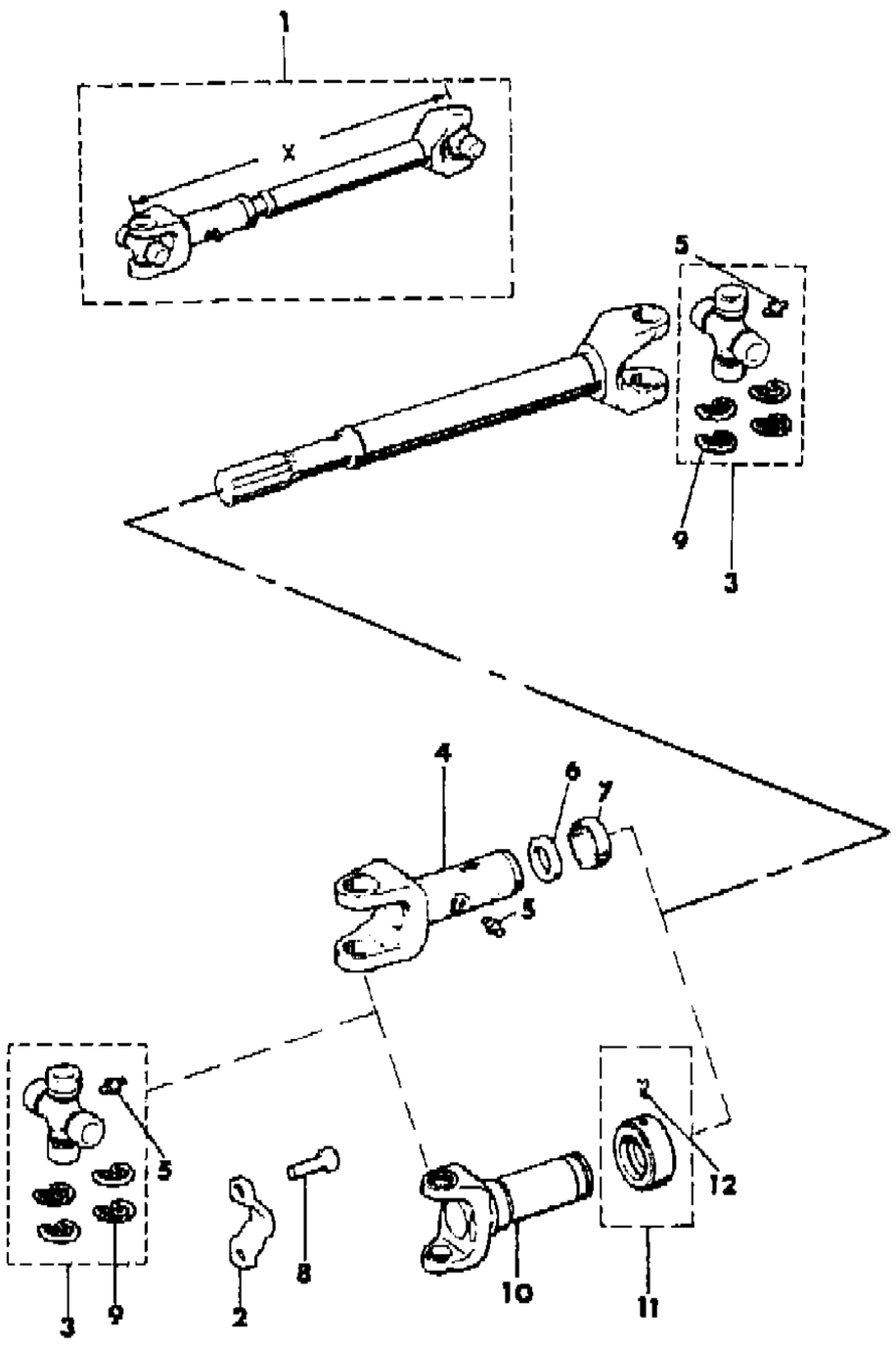

ITEM	PART NUMBER	QTY	BODY	MODEL	DESCRIPTION
1					SHAFT ASSEMBLY
					Four Cylinder
					SR-4 Four Speed Transmission
	J536 0982	1			1981 (31.75")
					T-176 Four Speed Transmission
	J536 0986	1			1981 (29.50")
	J536 0986	1		85	1982-83 (29.50")
	J536 2815	1		87,88	1982-86 (27.25")
					T-4 or T-5 Manual Transmission
	J536 0986	1			1982-86 (29.50")
					Automatic Transmission
	J535 6501	1			1981 (30.25")
					Six Cylinder
					SR-4 Four Speed Transmission
	J536 0982	1			1981 (31.75")
					T-176 Four Speed Transmission
	J536 0986	1			1981-86 (29.50")
					T-4 or T-5 Manual Transmission
	J536 0986	1		85	1982-83 (29.50")
	J536 0982	1		87,88	1982-86 (31.75")
					Automatic Transmission
	J536 0985	1			1981-86 (32.68")
					Eight Cylinder
					T-176 Four Speed Transmission
	J536 0986	1			1981-86 (29.50")
					Automatic Transmission
	J536 0985	1			1981 (32.68")
					Diesel
					T-176 Four Speed Transmission
	J536 0986	1			1981-86 (29.50")
2	J324 0553	4			STRAP
3	J812 6614	2			U-JOINT PACKAGE
4	J093 2209	1			YOKE, Slip
5	J027 1287	3			FITTING, Grease
6	J092 5869	1			SEAL
7	JA00 0942	1			CAP
8	J400 6928	8			BOLT
9	J320 7886	4			RING, Snap
10	8350 1594	1			YOKE, Slip

MODEL CODES

16=Cherokee 2 Dr.(1981-83)	78=Cherokee 4WD-4 Dr.(1984-86)	64=Comanche 2WD-6 Ft. Box(1986)	25=J-10 Truck 7 Ft. Box(1981-84)
17=Cherokee 2 Dr.(1981-83)	85=CJ-5 (1981-83)	66=Comanche 2WD-7 Ft. Box(1986)	26=J10 Truck 8 Ft. Box(1981-86)
73=Cherokee 2WD-2 Dr.(1984-86)	86=CJ-6(1981)	63=Comanche 4WD-6 Ft. Box(1986)	27=J-20 Truck 8 Ft. Box(1981-86)
74=Cherokee 2WD-4 Dr.(1984-86)	87=CJ-7(1981-86)	65=Comanche 4WD-7 Ft. Box(1986)	15=Wagoneer 4 Dr.(1981-83)
18=Cherokee 4 Dr.(1981-83)	88=CJ-8, Scrambler(1981-86)	15=Grand Wagoneer 4 Dr.(1984-86)	75=Wagoneer 4WD-4 Dr.(1984-86)
77=Cherokee 4WD-2 Dr.(1984-86)			

BODY
CJ=CJ-5, CJ-6, CJ-7, CJ-8, Scrambler(1981-86)
MJ=Comanche Pickup(1986)

STYLES
SJ=Wagoneer(1981-83), Grand Wagoneer(1984-86), Cherokee(1981-83), J-10, J-20(1981-86)
XJ=Wagoneer(1984-86), Cherokee(1984-86)

AR = Use as Required - = Non Illustrated Part P.A.R. = Paint as Required

FRONT PROPELLER SHAFT CJ-5,6,7,8, SCRAMBLER
Figure 16-100

81J16 100

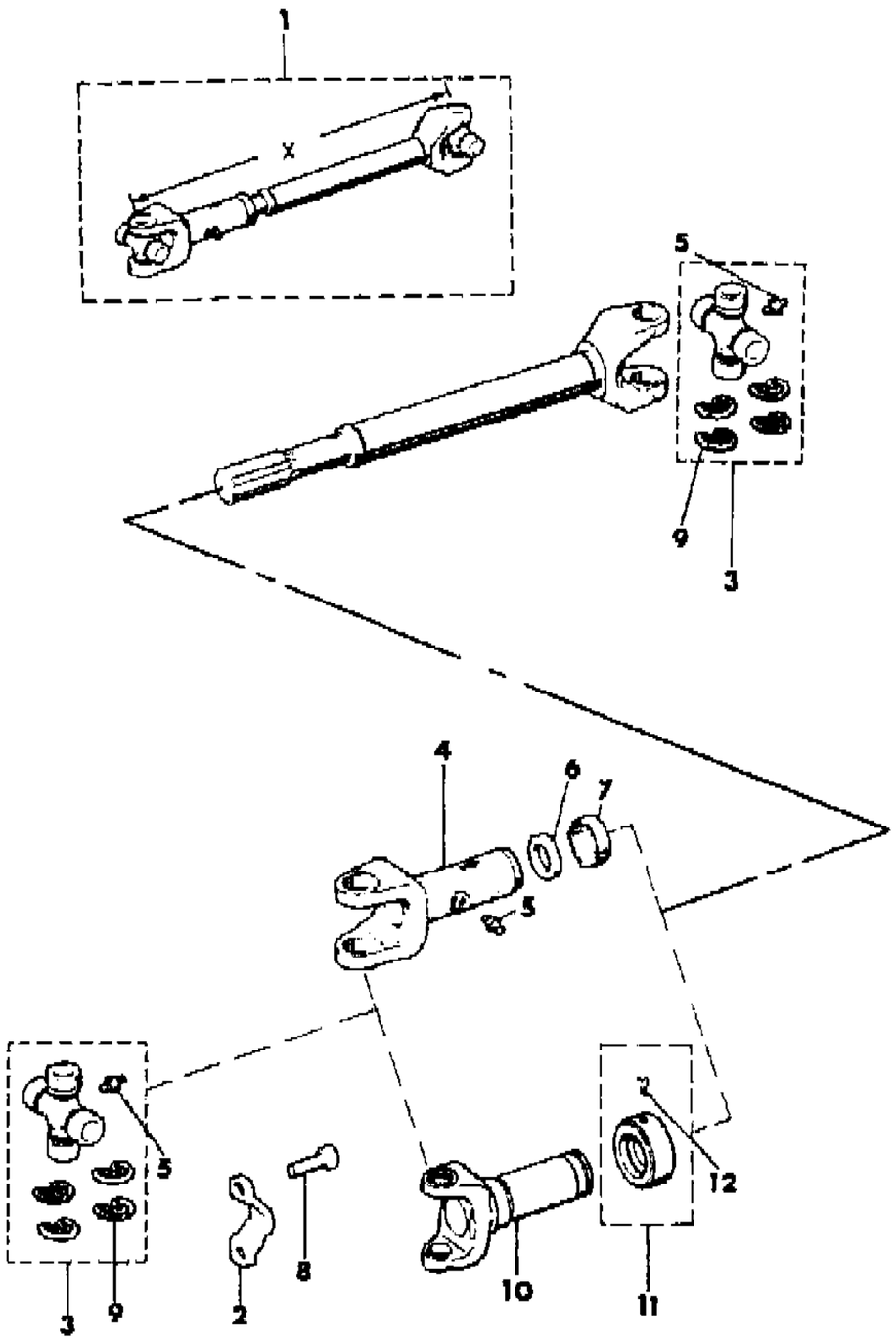

ITEM	PART NUMBER	QTY	BODY	MODEL	DESCRIPTION
11	8350 1595	1			CAP
12	J813 0300	1			FITTING, Grease

MODEL CODES

16=Cherokee 2 Dr.(1981-83)	78=Cherokee 4WD-4 Dr.(1984-86)	64=Comanche 2WD-6 Ft. Box(1986)	25=J-10 Truck 7 Ft. Box(1981-84)
17=Cherokee 2 Dr.(1981-83)	85=CJ-5 (1981-83)	66=Comanche 2WD-7 Ft. Box(1986)	26=J10 Truck 8 Ft. Box(1981-86)
73=Cherokee 2WD-2 Dr.(1984-86)	86=CJ-6(1981)	63=Comanche 4WD-6 Ft. Box(1986)	27=J-20 Truck 8 Ft. Box(1981-86)
74=Cherokee 2WD-4 Dr.(1984-86)	87=CJ-7(1981-86)	65=Comanche 4WD-7 Ft. Box(1986)	15=Wagoneer 4 Dr.(1981-83)
18=Cherokee 4 Dr.(1981-83)	88=CJ-8, Scrambler(1981-86)	15=Grand Wagoneer 4 Dr.(1984-86)	75=Wagoneer 4WD-4 Dr.(1984-86)
77=Cherokee 4WD-2 Dr.(1984-86)			

BODY
CJ=CJ-5, CJ-6, CJ-7, CJ-8, Scrambler(1981-86)
MJ=Comanche Pickup(1986)

STYLES
SJ=Wagoneer(1981-83), Grand Wagoneer(1984-86), Cherokee(1981-83), J-10, J-20(1981-86)
XJ=Wagoneer(1984-86), Cherokee(1984-86)

AR = Use as Required - = Non Illustrated Part P.A.R. = Paint as Required

« RETURN TO GROUP INDEX

FRONT PROPELLER SHAFT STANDARD DUTY XJ CHEROKEE, XJ WAGONEER, COMANCHE
Figure 16-200

81J16 200

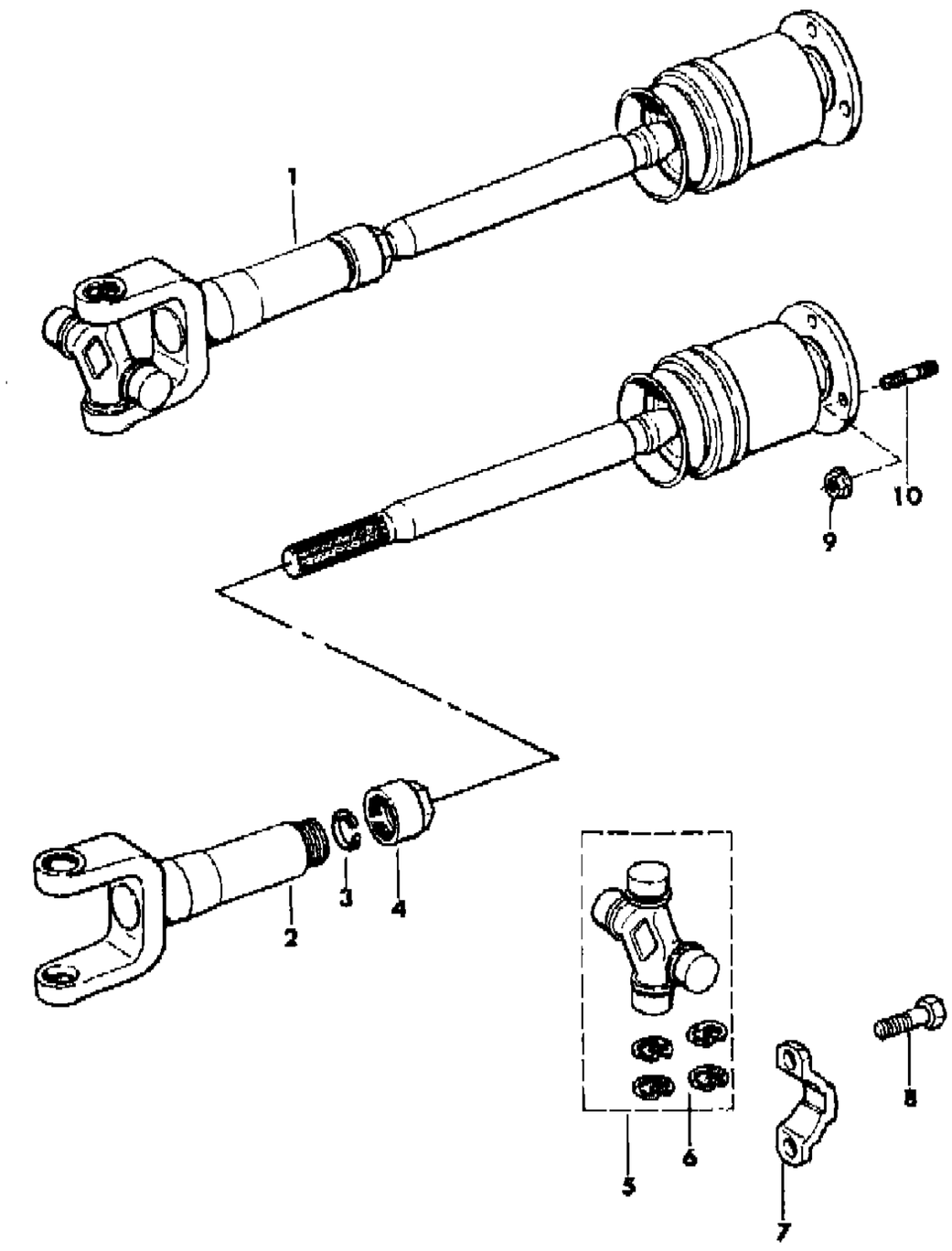

ITEM	PART NUMBER	QTY	BODY	MODEL	DESCRIPTION
1	5300 0029	1			SHAFT ASSEMBLY
2	5300 0741	1			YOKE, Slip
3	5300 0742	1			RING
4	5300 0743	1			NUT
5	J812 6614	1			U-JOINT PACKAGE
6	J320 7886	4			RING, Snap
7	J324 0553	2			STRAP
8	J400 6698	4			BOLT
9	1150 6007	4			NUT
10	3420 1651	4			STUD

MODEL CODES

16=Cherokee 2 Dr.(1981-83)
17=Cherokee 2 Dr.(1981-83)
73=Cherokee 2WD-2 Dr.(1984-86)
74=Cherokee 2WD-4 Dr.(1984-86)
18=Cherokee 4 Dr.(1981-83)
77=Cherokee 4WD-2 Dr.(1984-86)
78=Cherokee 4WD-4 Dr.(1984-86)
85=CJ-5 (1981-83)
86=CJ-6(1981)
87=CJ-7(1981-86)
88=CJ-8, Scrambler(1981-86)
64=Comanche 2WD-6 Ft. Box(1986)
66=Comanche 2WD-7 Ft. Box(1986)
63=Comanche 4WD-6 Ft. Box(1986)
65=Comanche 4WD-7 Ft. Box(1986)
15=Grand Wagoneer 4 Dr.(1984-86)
25=J-10 Truck 7 Ft. Box(1981-84)
26=J10 Truck 8 Ft. Box(1981-86)
27=J-20 Truck 8 Ft. Box(1981-86)
15=Wagoneer 4 Dr.(1981-83)
75=Wagoneer 4WD-4 Dr.(1984-86)

BODY
CJ=CJ-5, CJ-6, CJ-7, CJ-8, Scrambler(1981-86)
MJ=Comanche Pickup(1986)

STYLES
SJ=Wagoneer(1981-83), Grand Wagoneer(1984-86), Cherokee(1981-83), J-10, J-20(1981-86)
XJ=Wagoneer(1984-86), Cherokee(1984-86)

AR = Use as Required - = Non Illustrated Part P.A.R. = Paint as Required

« RETURN TO GROUP INDEX

FRONT PROPELLER SHAFT HEAVY DUTY XJ CHEROKEE, XJ WAGONEER, COMANCHE
Figure 16-300

81J16 300

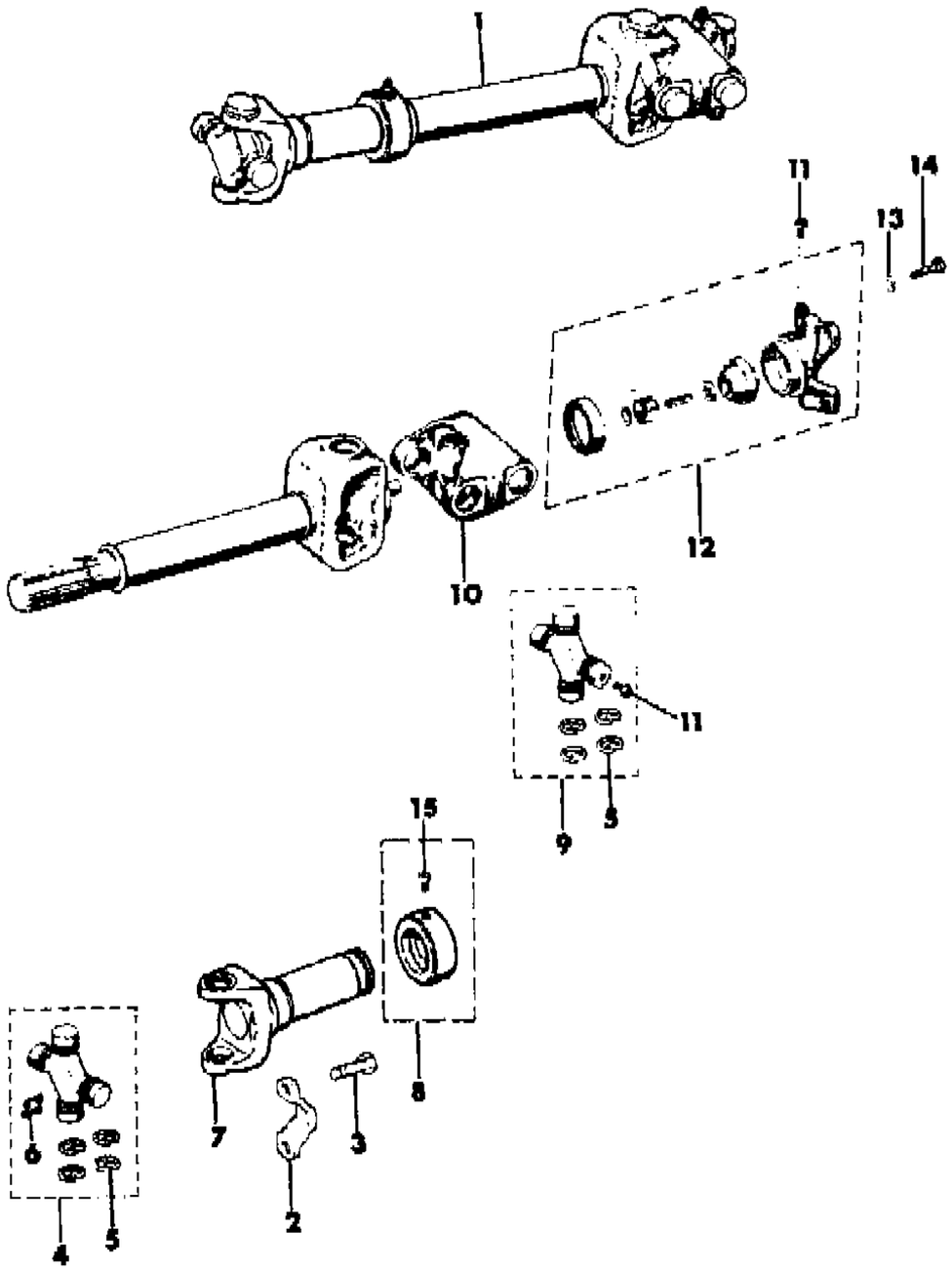

ITEM	PART NUMBER	QTY	BODY	MODEL	DESCRIPTION
1	5300 3389	1			SHAFT ASSEMBLY
2	J324 0553	2			STRAP
3	J400 6698	4			BOLT
4	J812 6614	1			U-JOINT PACKAGE
5	J320 7886	12			RING, Snap
6	J027 1287	1			FITTING, Grease
7	8350 1594	1			YOKE, Slip
8	8350 2812	1			SEAL
9	J813 0750	2			U-JOINT PACKAGE
10	J813 0296	1			YOKE
11	J099 4826	3			FITTING, Grease
12	J813 0303	1			FLANGE
13	J012 0214	4			WASHER
14	J018 1613	4			BOLT
15	J813 0300	1			FITTING, Grease

MODEL CODES

16=Cherokee 2 Dr.(1981-83)
17=Cherokee 2 Dr.(1981-83)
73=Cherokee 2WD-2 Dr.(1984-86)
74=Cherokee 2WD-4 Dr.(1984-86)
18=Cherokee 4 Dr.(1981-83)
77=Cherokee 4WD-2 Dr.(1984-86)
78=Cherokee 4WD-4 Dr.(1984-86)
85=CJ-5 (1981-83)
86=CJ-6(1981)
87=CJ-7(1981-86)
88=CJ-8, Scrambler(1981-86)
64=Comanche 2WD-6 Ft. Box(1986)
66=Comanche 2WD-7 Ft. Box(1986)
63=Comanche 4WD-6 Ft. Box(1986)
65=Comanche 4WD-7 Ft. Box(1986)
15=Grand Wagoneer 4 Dr.(1984-86)
25=J-10 Truck 7 Ft. Box(1981-84)
26=J10 Truck 8 Ft. Box(1981-86)
27=J-20 Truck 8 Ft. Box(1981-86)
15=Wagoneer 4 Dr.(1981-83)
75=Wagoneer 4WD-4 Dr.(1984-86)

BODY
CJ=CJ-5, CJ-6, CJ-7, CJ-8, Scrambler(1981-86)
MJ=Comanche Pickup(1986)

STYLES
SJ=Wagoneer(1981-83), Grand Wagoneer(1984-86), Cherokee(1981-83), J-10, J-20(1981-86)
XJ=Wagoneer(1984-86), Cherokee(1984-86)

AR = Use as Required - = Non Illustrated Part P.A.R. = Paint as Required

« RETURN TO GROUP INDEX

FRONT PROPELLER SHAFT SJ CHEROKEE, SJ WAGONEER, J10, J20
Figure 16-400

81J16 400

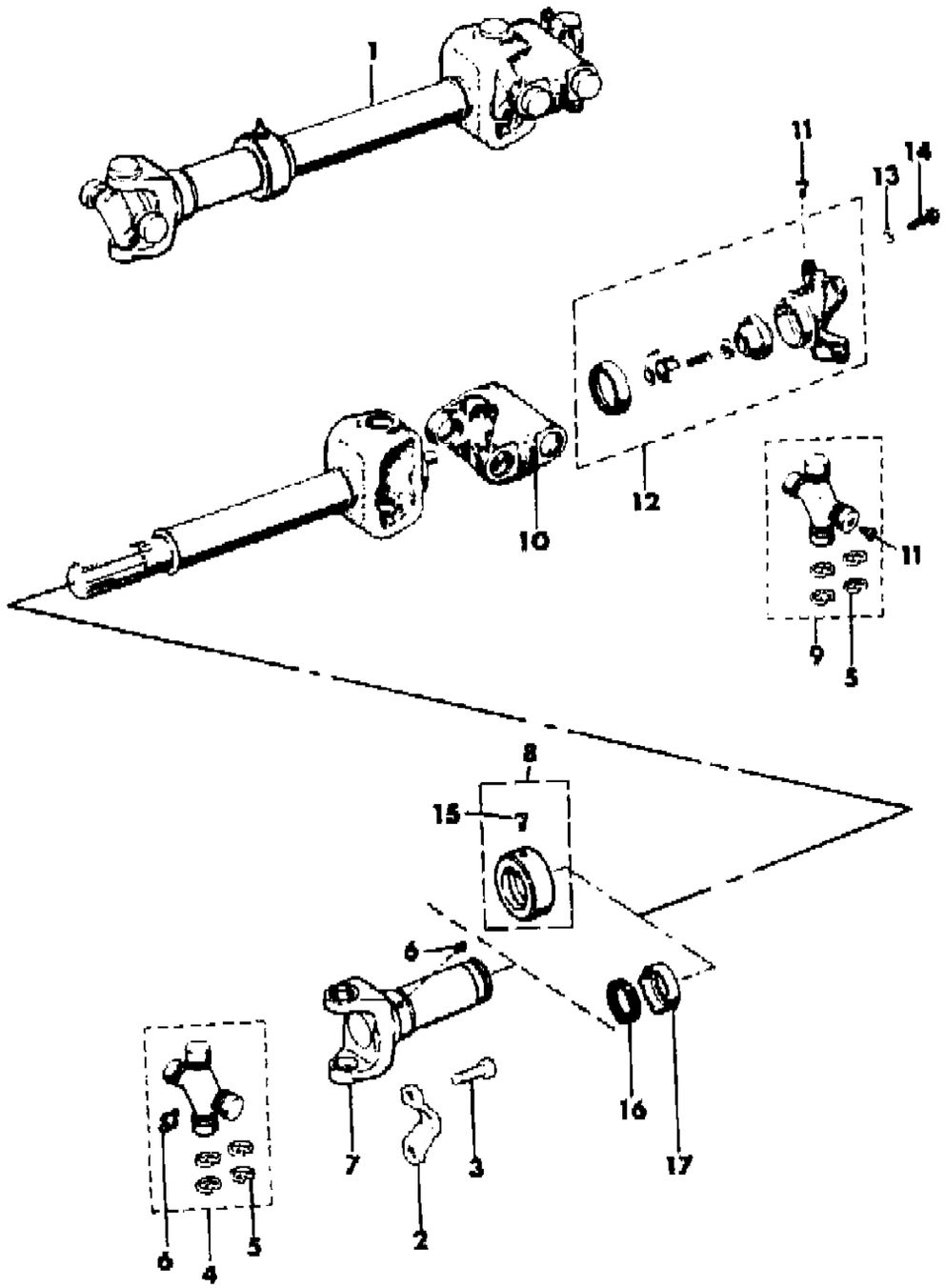

ITEM	PART NUMBER	QTY	BODY	MODEL	DESCRIPTION
1					SHAFT ASSEMBLY
					With Four Speed Manual Transmission
	J536 0995	1		15,16,1	
	J536 0995	1		25,26	
	J536 0998	1		27	
					With Five Speed Manual Transmission
	J536 3399	1		15,16,1	
	J536 3399	1		25,26	
					With Automatic Transmission
	J536 0997	1			With Six Cylinder
	J536 0996	1			With Eight Cylinder
2	J324 0553	2			STRAP
3	J400 6928	4			BOLT
4	J812 6614	1			U-JOINT PACKAGE
5	J320 7886	12			RING, Snap
6	J027 1287	2			FITTING, Grease
7	J093 2209	1			YOKE, Slip (grease fitting on yoke)
	8350 1594	1			YOKE, Slip (grease fitting on cap)
8	8350 1595	1			SEAL
9	J813 0750	2			U-JOINT PACKAGE
10	J813 0296	1			YOKE
11	J099 4826	3			FITTING, Grease
12	J812 6796	1			FLANGE
13	J012 0214	4			WASHER
14	J018 1613	4			BOLT
15	J813 0300	1			FITTING, Grease
16	J092 5869	1			SEAL
17	JA00 942	1			CAP

MODEL CODES
16=Cherokee 2 Dr.(1981-83)
17=Cherokee 2 Dr.(1981-83)
73=Cherokee 2WD-2 Dr.(1984-86)
74=Cherokee 2WD-4 Dr.(1984-86)
18=Cherokee 4 Dr.(1981-83)
77=Cherokee 4WD-2 Dr.(1984-86)
78=Cherokee 4WD-4 Dr.(1984-86)
85=CJ-5 (1981-83)
86=CJ-6(1981)
87=CJ-7(1981-86)
88=CJ-8, Scrambler(1981-86)
64=Comanche 2WD-6 Ft. Box(1986)
66=Comanche 2WD-7 Ft. Box(1986)
63=Comanche 4WD-6 Ft. Box(1986)
65=Comanche 4WD-7 Ft. Box(1986)
15=Grand Wagoneer 4 Dr.(1984-86)
25=J-10 Truck 7 Ft. Box(1981-84)
26=J10 Truck 8 Ft. Box(1981-86)
27=J-20 Truck 8 Ft. Box(1981-86)
15=Wagoneer 4 Dr.(1981-83)
75=Wagoneer 4WD-4 Dr.(1984-86)

BODY
CJ=CJ-5, CJ-6, CJ-7, CJ-8, Scrambler(1981-86)
MJ=Comanche Pickup(1986)

STYLES
SJ=Wagoneer(1981-83), Grand Wagoneer(1984-86), Cherokee(1981-83), J-10, J-20(1981-86)
XJ=Wagoneer(1984-86), Cherokee(1984-86)

AR = Use as Required - = Non Illustrated Part P.A.R. = Paint as Required

« RETURN TO GROUP INDEX

REAR PROPELLER SHAFT CJ-5,6,7,8, SCRAMBLER
Figure 16-500

81J16 500

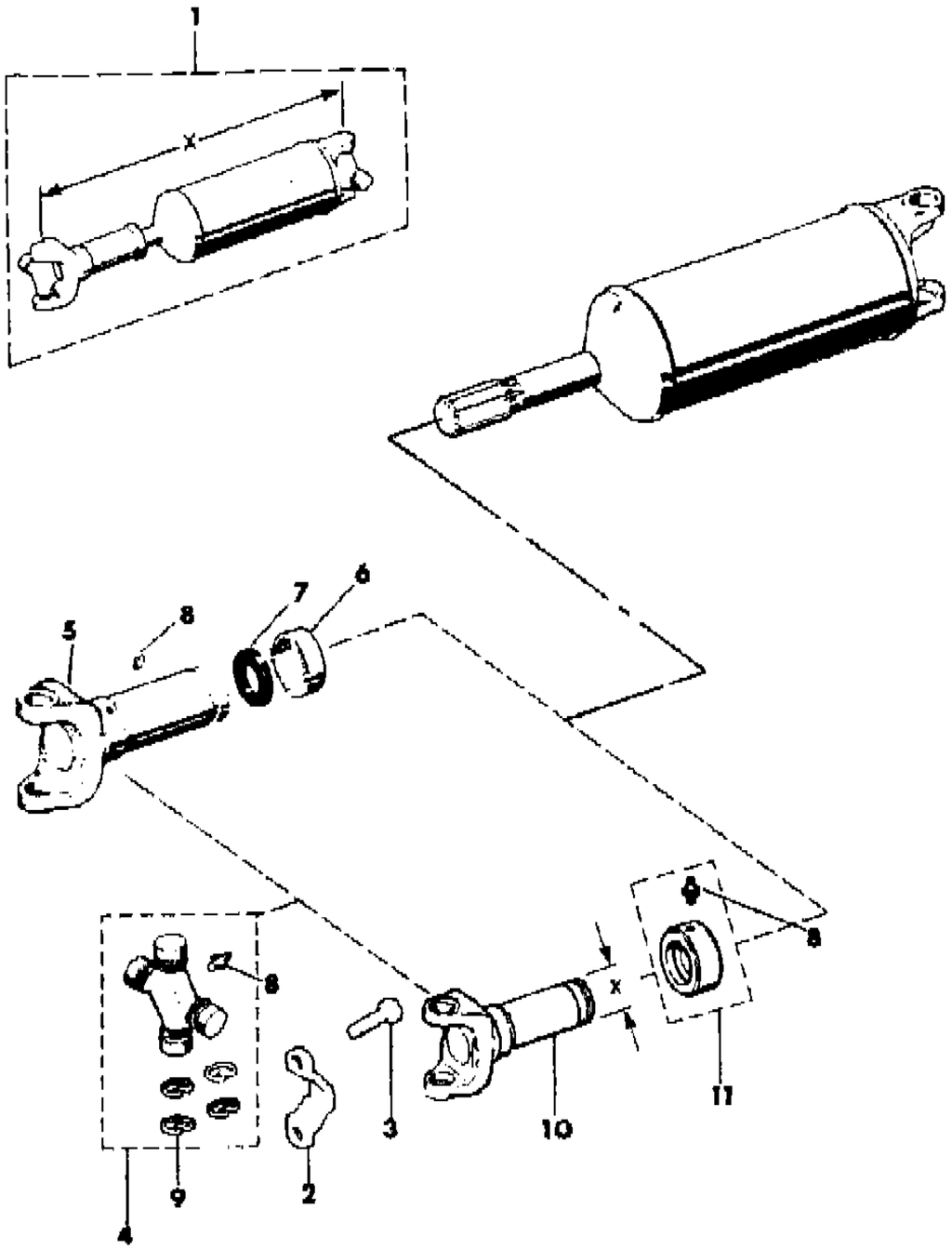

ITEM	PART NUMBER	QTY	BODY	MODEL	DESCRIPTION
1					SHAFT ASSEMBLY
					Four Cylinder
					SR-4 Four Speed Transmission
	J536 0987	1		87	1981 (20.80")
	J536 2277	1		86,88	1981 (30.60")
					T-176 Four Speed Transmission
	J536 2276	1		85	1981 (12.88")
	J536 2281	1		87	1981 (22.90")
	J536 2278	1		86,88	1981 (32.88")
	J536 2813	1		85	1982-83 (16.15")
	J536 2814	1		87	1982-86 (26.20")
	J536 4017	1		88	1982-86 (36.14")
					T-4 or T-5 Manual Transmission
	J536 2276	1		85	1982-83 (12.88")
	J536 2281	1		87	1982-86 (22.90")
	J536 2278	1		88	1982-86 (32.88")
					Automatic Transmission
	J536 2282	1		87	1981 (22.26")
	J536 2674	1		86,88	1981 (32.26")
					Six Cylinder
					SR-4 Four Speed Transmission
	J536 0987	1		87	1981 (20.80")
	J536 2277	1		86,88	1981 (30.60")
					T-176 Four Speed Transmission
	J536 2276	1		85	1981-83 (12.88")
	J536 2281	1		87	1981-86 (22.90")
	J536 2278	1		86,88	1981-86 (32.88")
					T-4 or T-5 Manual Transmission
	J536 2276	1		85	1982-83 (12.88")
	J536 0987	1		87	1982-86 (20.80")
	J536 2277	1		88	1982-86 (30.60")
					Automatic Transmission
	J536 2280	1		87	1981-86 (19.75")
	J536 2675	1		86,88	1981-86 (29.92")
					Eight Cylinder
					T-176 Four Speed Transmission
	J536 2276	1		85	1981 (12.88")
	J536 2281	1		87	1981 (22.90")
					Automatic Transmission

MODEL CODES

16=Cherokee 2 Dr.(1981-83)	78=Cherokee 4WD-4 Dr.(1984-86)	64=Comanche 2WD-6 Ft. Box(1986)	25=J-10 Truck 7 Ft. Box(1981-84)
17=Cherokee 2 Dr.(1981-83)	85=CJ-5 (1981-83)	66=Comanche 2WD-7 Ft. Box(1986)	26=J10 Truck 8 Ft. Box(1981-86)
73=Cherokee 2WD-2 Dr.(1984-86)	86=CJ-6(1981)	63=Comanche 4WD-6 Ft. Box(1986)	27=J-20 Truck 8 Ft. Box(1981-86)
74=Cherokee 2WD-4 Dr.(1984-86)	87=CJ-7(1981-86)	65=Comanche 4WD-7 Ft. Box(1986)	15=Wagoneer 4 Dr.(1981-83)
18=Cherokee 4 Dr.(1981-83)	88=CJ-8, Scrambler(1981-86)	15=Grand Wagoneer 4 Dr.(1984-86)	75=Wagoneer 4WD-4 Dr.(1984-86)
77=Cherokee 4WD-2 Dr.(1984-86)			

BODY
CJ=CJ-5, CJ-6, CJ-7, CJ-8, Scrambler(1981-86)
MJ=Comanche Pickup(1986)

STYLES
SJ=Wagoneer(1981-83), Grand Wagoneer(1984-86), Cherokee(1981-83), J-10, J-20(1981-86)
XJ=Wagoneer(1984-86), Cherokee(1984-86)

AR = Use as Required - = Non Illustrated Part P.A.R. = Paint as Required

REAR PROPELLER SHAFT CJ-5,6,7,8, SCRAMBLER
Figure 16-500

81J16 500

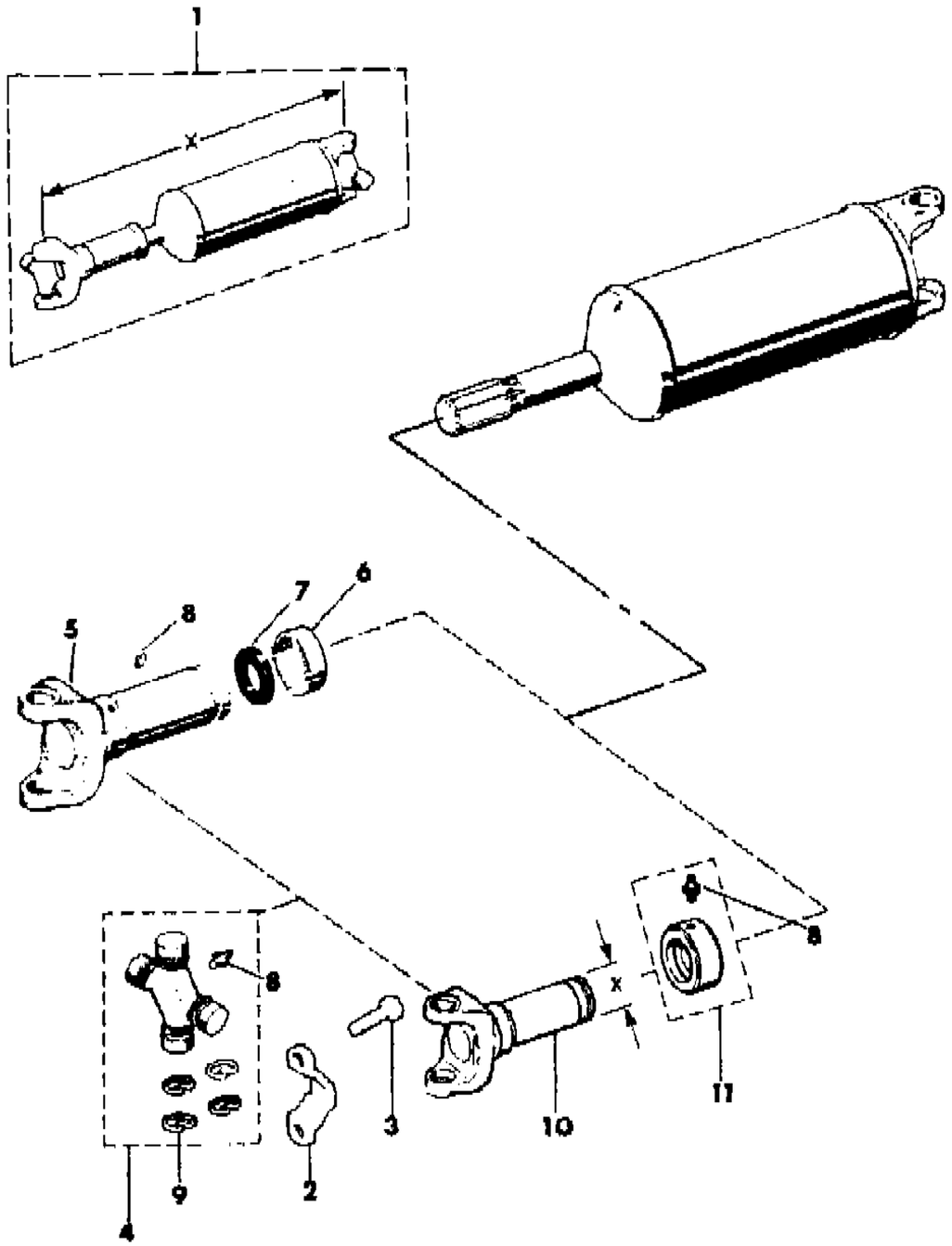

ITEM	PART NUMBER	QTY	BODY	MODEL	DESCRIPTION
	J536 2280	1		87	1981 (19.75")
					Diesel
					T-176 Four Speed Manual Transmission
	J536 2276	1		85	1981-86 (12.88")
	J536 2281	1		87	1981-86 (22.90")
	J536 2278	1		86,88	1981-86 (32.88")
2	J324 0553	4			STRAP
3	J400 6928	8			BOLT
4	J812 6614	2			U-JOINT PACKAGE
5	J093 2209	1			YOKE, Slip
6	JA00 0942	1			CAP
7	J092 5869	1			SEAL
8	J027 1287	3			FITTING, Grease
9	J320 7886	4			RING, Snap
10					YOKE, Slip
	J813 4782	1			X=1.87"
	8350 1594	1			X=1.57"
11					CAP
	J813 4783	1			X=1.87"
	8350 1595	1			X=1.57"

MODEL CODES

16=Cherokee 2 Dr.(1981-83)
17=Cherokee 2 Dr.(1981-83)
73=Cherokee 2WD-2 Dr.(1984-86)
74=Cherokee 2WD-4 Dr.(1984-86)
18=Cherokee 4 Dr.(1981-83)
77=Cherokee 4WD-2 Dr.(1984-86)
78=Cherokee 4WD-4 Dr.(1984-86)
85=CJ-5 (1981-83)
86=CJ-6(1981)
87=CJ-7(1981-86)
88=CJ-8, Scrambler(1981-86)
64=Comanche 2WD-6 Ft. Box(1986)
66=Comanche 2WD-7 Ft. Box(1986)
63=Comanche 4WD-6 Ft. Box(1986)
65=Comanche 4WD-7 Ft. Box(1986)
15=Grand Wagoneer 4 Dr.(1984-86)
25=J-10 Truck 7 Ft. Box(1981-84)
26=J10 Truck 8 Ft. Box(1981-86)
27=J-20 Truck 8 Ft. Box(1981-86)
15=Wagoneer 4 Dr.(1981-83)
75=Wagoneer 4WD-4 Dr.(1984-86)

BODY
CJ=CJ-5, CJ-6, CJ-7, CJ-8, Scrambler(1981-86)
MJ=Comanche Pickup(1986)

STYLES
SJ=Wagoneer(1981-83), Grand Wagoneer(1984-86), Cherokee(1981-83), J-10, J-20(1981-86)
XJ=Wagoneer(1984-86), Cherokee(1984-86)

AR = Use as Required - = Non Illustrated Part P.A.R. = Paint as Required

« RETURN TO GROUP INDEX

REAR PROPELLER SHAFT 2 WHEEL DRIVE XJ CHEROKEE, XJ WAGONEER, COMANCHE
Figure 16-600

81J16 600

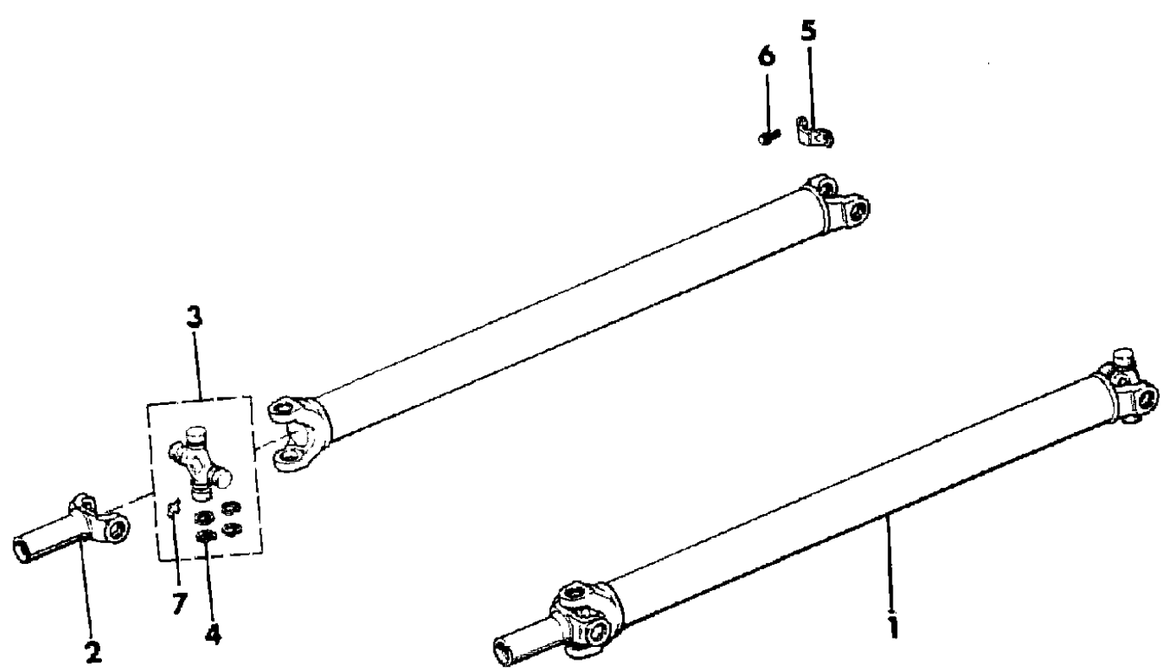

ITEM	PART NUMBER	QTY	BODY	MODEL	DESCRIPTION
1					SHAFT ASSEMBLY
	5300 2435	1	XJ		With Manual Transmission
	5300 2210	1	XJ		With Automatic Transmission
					With Manual Transmission
	5300 4448	1	MJ		With AMC or Dana Model 35 Rear Axle
	5300 4352	1	MJ		With AMC Large Axle or Dana Model 44 Rear Axle
					With Automatic Transmission
	5300 4447	1	MJ		With AMC or Dana Model 35 Rear Axle
	5300 4351	1	MJ		With AMC Large Axle or Dana Model 44 Rear Axle
2					YOKE, SLIP
	5300 1987	1			With Manual Transmission
					With Automatic Transmission
	J323 3709	1			1984-85
	5300 1986	1			1986
3	J812 6614	2			U-JOINT PACKAGE
4	J320 7886	8			RING, Snap
5	J324 0553	2			STRAP
6	J400 6928	4			BOLT
7	J027 1287	2			FITTING, Grease

MODEL CODES

16=Cherokee 2 Dr.(1981-83)	78=Cherokee 4WD-4 Dr.(1984-86)	64=Comanche 2WD-6 Ft. Box(1986)	25=J-10 Truck 7 Ft. Box(1981-84)
17=Cherokee 2 Dr.(1981-83)	85=CJ-5 (1981-83)	66=Comanche 2WD-7 Ft. Box(1986)	26=J10 Truck 8 Ft. Box(1981-86)
73=Cherokee 2WD-2 Dr.(1984-86)	86=CJ-6(1981)	63=Comanche 4WD-6 Ft. Box(1986)	27=J-20 Truck 8 Ft. Box(1981-86)
74=Cherokee 2WD-4 Dr.(1984-86)	87=CJ-7(1981-86)	65=Comanche 4WD-7 Ft. Box(1986)	15=Wagoneer 4 Dr.(1981-83)
18=Cherokee 4 Dr.(1981-83)	88=CJ-8, Scrambler(1981-86)	15=Grand Wagoneer 4 Dr.(1984-86)	75=Wagoneer 4WD-4 Dr.(1984-86)
77=Cherokee 4WD-2 Dr.(1984-86)			

BODY
CJ=CJ-5, CJ-6, CJ-7, CJ-8, Scrambler(1981-86)
MJ=Comanche Pickup(1986)

STYLES
SJ=Wagoneer(1981-83), Grand Wagoneer(1984-86), Cherokee(1981-83), J-10, J-20(1981-86)
XJ=Wagoneer(1984-86), Cherokee(1984-86)

AR = Use as Required - = Non Illustrated Part P.A.R. = Paint as Required

« RETURN TO GROUP INDEX

REAR PROPELLER SHAFT 4 WHEEL DRIVE XJ CHEROKEE, XJ WAGONEER, COMANCHE
Figure 16-700

81J16 700

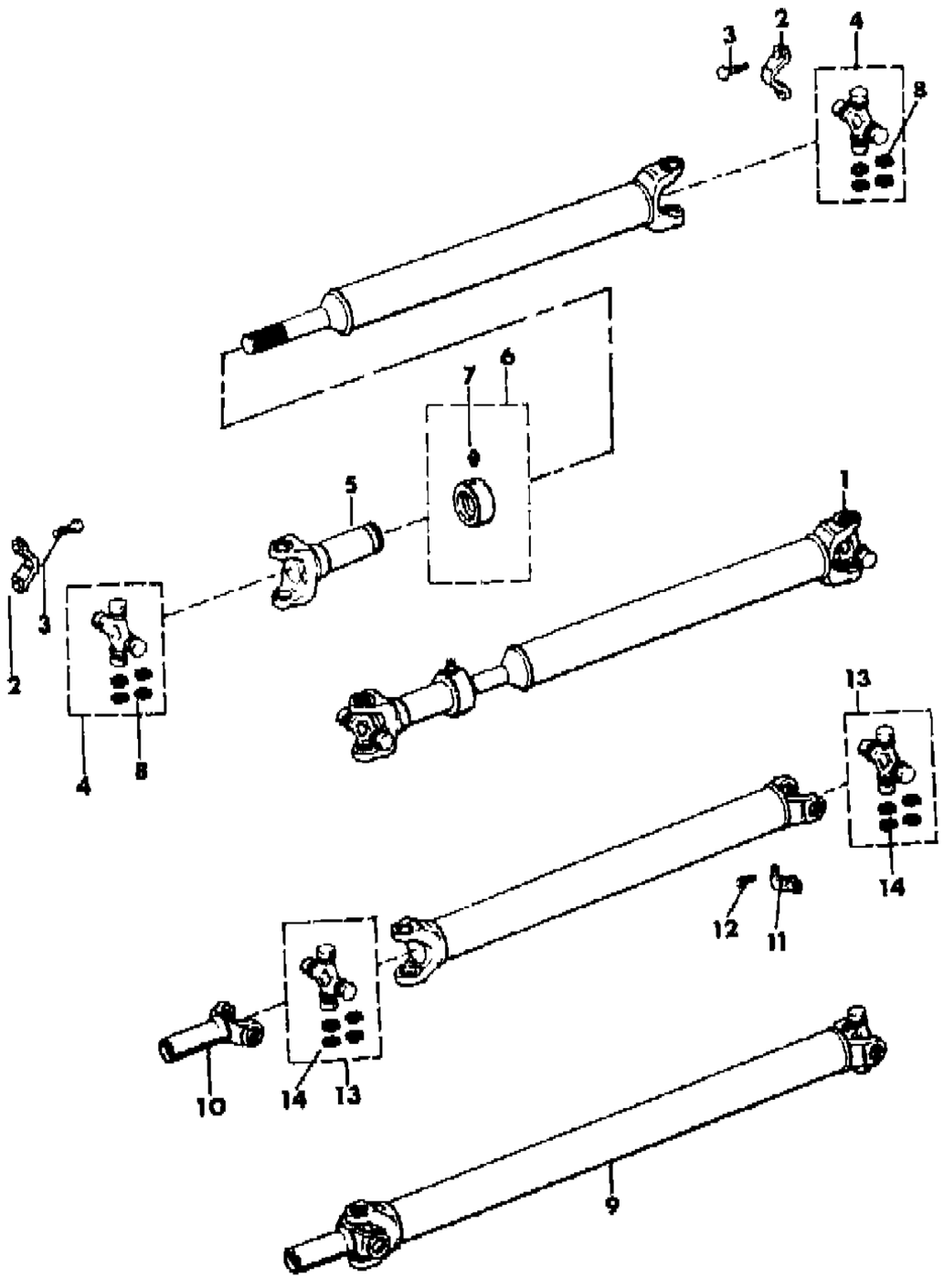

ITEM	PART NUMBER	QTY	BODY	MODEL	DESCRIPTION
1					SHAFT ASSEMBLY, With NPG Model 228 or 229 Transfer Case
	5300 0035	1	XJ		1984-85: With Manual Transmission
	8350 3575	1	XJ		1986: With Manual Transmission
	8350 3575	1	XJ		With Automatic Transmission
	5300 1259	1	MJ		With AMC or Dana Model 35 Rear Axle
	5300 1979	1	MJ		With AMC Large Axle or Dana Model 44 Rear Axle
2	J324 0553	4			STRAP
3	J400 6928	8			BOLT
4	J812 6614	2			U-JOINT PACKAGE
5	J813 4782	1			YOKE, Slip
6	J813 4783	1			SEAL
7	J027 1287	1			FITTING, Grease
8	J320 7886	4			RING, Snap
9					SHAFT ASSEMBLY, With NPG Model 207 Transfer Case
	5300 0037	1	XJ		1984-85: With Manual Transmission Tagged 8953001547, 8953001548, 8953002269, 8953001551, 8953001552 or 8953002270
	5300 0036	1	XJ		1984-85: With Manual Transmission Tagged 8953001565, 8953002264, 8953001566 or 8953001190
	5300 0036	1	XJ		1984-85: With Automatic Transmission
	5300 0036	1	XJ		1986
	5300 4446	1	MJ		With AMC or Dana Model 35 Rear Axle
	5300 4350	1	MJ		With AMC Large Axle or Dana Model 44 Rear Axle
10	8350 0143	1			YOKE, Slip
11	J324 0553	2			STRAP
12	J400 6928	4			BOLT
13	J812 6614	2			U-JOINT PACKAGE
14	J320 7886	8			RING, Snap

MODEL CODES

16=Cherokee 2 Dr.(1981-83)
17=Cherokee 2 Dr.(1981-83)
73=Cherokee 2WD-2 Dr.(1984-86)
74=Cherokee 2WD-4 Dr.(1984-86)
18=Cherokee 4 Dr.(1981-83)
77=Cherokee 4WD-2 Dr.(1984-86)
78=Cherokee 4WD-4 Dr.(1984-86)
85=CJ-5 (1981-83)
86=CJ-6(1981)
87=CJ-7(1981-86)
88=CJ-8, Scrambler(1981-86)
64=Comanche 2WD-6 Ft. Box(1986)
66=Comanche 2WD-7 Ft. Box(1986)
63=Comanche 4WD-6 Ft. Box(1986)
65=Comanche 4WD-7 Ft. Box(1986)
15=Grand Wagoneer 4 Dr.(1984-86)
25=J-10 Truck 7 Ft. Box(1981-84)
26=J10 Truck 8 Ft. Box(1981-86)
27=J-20 Truck 8 Ft. Box(1981-86)
15=Wagoneer 4 Dr.(1981-83)
75=Wagoneer 4WD-4 Dr.(1984-86)

BODY
CJ=CJ-5, CJ-6, CJ-7, CJ-8, Scrambler(1981-86)
MJ=Comanche Pickup(1986)

STYLES
SJ=Wagoneer(1981-83), Grand Wagoneer(1984-86), Cherokee(1981-83), J-10, J-20(1981-86)
XJ=Wagoneer(1984-86), Cherokee(1984-86)

AR = Use as Required - = Non Illustrated Part P.A.R. = Paint as Required

« RETURN TO GROUP INDEX

REAR PROPELLER SHAFT SJ CHEROKEE, SJ WAGONEER, J10, J20
Figure 16-800

81J16 800

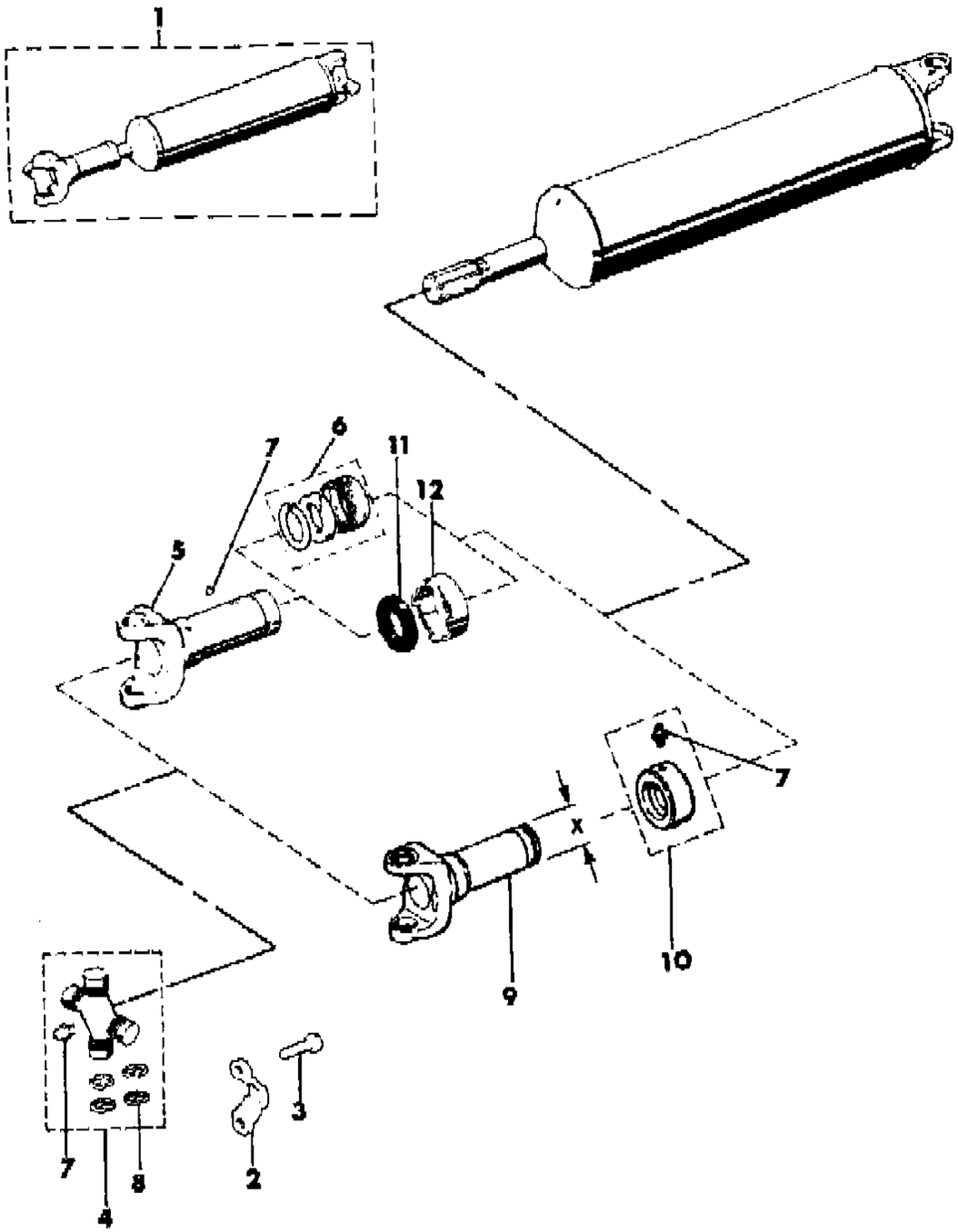

ITEM	PART NUMBER	QTY	BODY	MODEL	DESCRIPTION
1					SHAFT ASSEMBLY
					Six Cylinder
					Four Speed Transmission, NPG 208 Transfer Case
	J536 1007	1		15,16,1	1981-86 (40.40")
	J536 1008	1		25	1981-84 (50.54")
	J536 1009	1		26	1981-86 (62.46")
					Five Speed Transmission, NPG 208 Transfer Case
	J536 3370	1		15,16,1	1982-83 (38.87")
	J536 3371	1		25	1982-83 (48.59")
	J536 3372	1		26	1982-83 (60.90")
					Automatic Transmission, NPG 208 Transfer Case
	J536 1011	1		15,16,1	1981-86 (37.32")
	J536 1012	1		25	1981-84 (47.42")
	J536 1013	1		26	1981-86 (59.30")
					Automatic Transmission, NPG 219, 228 or 229 Transfer Case
	J536 0999	1		15,16,1	1981-86 (32.20")
	J536 1000	1		25	1981-84 (42.32")
	J536 1001	1		26	1981-86 (54.20")
					Eight Cylinder
					Four Speed Transmission, NPG 208 Transfer Case
	J536 1007	1		15,16,1	1981-83 (40.40")
	J536 1008	1		25	1981-84 (50.54")
	J536 1009	1		26	1981-86 (62.46")
	J536 1010	1		27	1981-83 (53.20")
					Automatic Transmission, NPG 208 Transfer Case
	J536 1015	1		15,16,1	1981-83 (41.23")
	J536 1016	1		25	1981-84 (51.32")
	J536 1017	1		26	1981-86 (63.20")
	J536 1018	1		27	1981-86 (62.80")
					Automatic Transmission, NPG 219, 228 or 229 Transfer Case
	J536 1003	1		15,16,1	1981-86 (36.14")
	J536 1004	1		25	1981-84 (46.26")
	J536 1005	1		26	1981-86 (58.14")
	J536 1006	1		27	1981-86 (57.74")
2	J324 0553	4			STRAP
3	J400 6698	8			BOLT
4	J812 6614	2			U-JOINT PACKAGE
5					YOKE, Slip
	J812 7263	1		15,16,1	Threaded Style

MODEL CODES

16=Cherokee 2 Dr.(1981-83)	78=Cherokee 4WD-4 Dr.(1984-86)	64=Comanche 2WD-6 Ft. Box(1986)	25=J-10 Truck 7 Ft. Box(1981-84)
17=Cherokee 2 Dr.(1981-83)	85=CJ-5 (1981-83)	66=Comanche 2WD-7 Ft. Box(1986)	26=J10 Truck 8 Ft. Box(1981-86)
73=Cherokee 2WD-2 Dr.(1984-86)	86=CJ-6(1981)	63=Comanche 4WD-6 Ft. Box(1986)	27=J-20 Truck 8 Ft. Box(1981-86)
74=Cherokee 2WD-4 Dr.(1984-86)	87=CJ-7(1981-86)	65=Comanche 4WD-7 Ft. Box(1986)	15=Wagoneer 4 Dr.(1981-83)
18=Cherokee 4 Dr.(1981-83)	88=CJ-8, Scrambler(1981-86)	15=Grand Wagoneer 4 Dr.(1984-86)	75=Wagoneer 4WD-4 Dr.(1984-86)
77=Cherokee 4WD-2 Dr.(1984-86)			

BODY
CJ=CJ-5, CJ-6, CJ-7, CJ-8, Scrambler(1981-86)
MJ=Comanche Pickup(1986)

STYLES
SJ=Wagoneer(1981-83), Grand Wagoneer(1984-86), Cherokee(1981-83), J-10, J-20(1981-86)
XJ=Wagoneer(1984-86), Cherokee(1984-86)

AR = Use as Required - = Non Illustrated Part P.A.R. = Paint as Required

REAR PROPELLER SHAFT SJ CHEROKEE, SJ WAGONEER, J10, J20
Figure 16-800

81J16 800

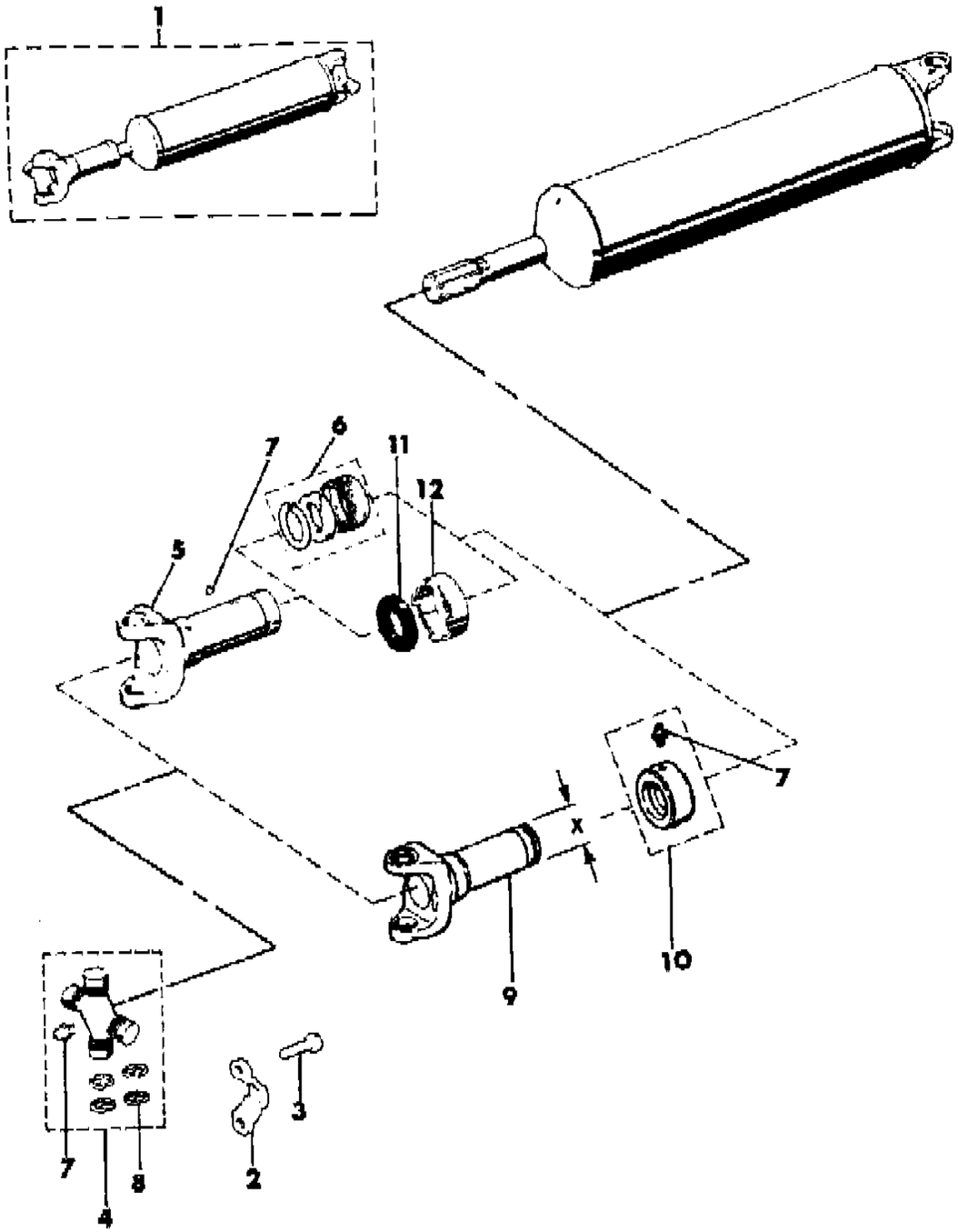

ITEM	PART NUMBER	QTY	BODY	MODEL	DESCRIPTION
	J812 6400	1		25,26,2	Threaded Style
	J093 2209	1		25,26,2	Crimped Style
6					SEAL PACKAGE ***
	J812 8447	1		15,16,1	
	J813 0302	1		25,26,2	
7	J027 1287	3			FITTING, Grease
8	J320 7886	8			RING, Snap
9					YOKE, Slip
	J813 4782	1			x=1.870"
	8350 1594	1			x=1.577"
10					CAP
	J813 4783	1			x=1.870"
	8350 1595	1			x=1.577"
11	J813 3884	1			SEAL
	J092 5869	1			
12					CAP
	JA00 0942	1			w/Metal Splines
	J813 0776	1			w/Rubber Splines

MODEL CODES

16=Cherokee 2 Dr.(1981-83)
17=Cherokee 2 Dr.(1981-83)
73=Cherokee 2WD-2 Dr.(1984-86)
74=Cherokee 2WD-4 Dr.(1984-86)
18=Cherokee 4 Dr.(1981-83)
77=Cherokee 4WD-2 Dr.(1984-86)
78=Cherokee 4WD-4 Dr.(1984-86)
85=CJ-5 (1981-83)
86=CJ-6(1981)
87=CJ-7(1981-86)
88=CJ-8, Scrambler(1981-86)
64=Comanche 2WD-6 Ft. Box(1986)
66=Comanche 2WD-7 Ft. Box(1986)
63=Comanche 4WD-6 Ft. Box(1986)
65=Comanche 4WD-7 Ft. Box(1986)
15=Grand Wagoneer 4 Dr.(1984-86)
25=J-10 Truck 7 Ft. Box(1981-84)
26=J10 Truck 8 Ft. Box(1981-86)
27=J-20 Truck 8 Ft. Box(1981-86)
15=Wagoneer 4 Dr.(1981-83)
75=Wagoneer 4WD-4 Dr.(1984-86)

BODY
CJ=CJ-5, CJ-6, CJ-7, CJ-8, Scrambler(1981-86)
MJ=Comanche Pickup(1986)

STYLES
SJ=Wagoneer(1981-83), Grand Wagoneer(1984-86), Cherokee(1981-83), J-10, J-20(1981-86)
XJ=Wagoneer(1984-86), Cherokee(1984-86)

AR = Use as Required - = Non Illustrated Part P.A.R. = Paint as Required

« RETURN TO GROUP INDEX

GROUP 17 - REAR SUSPENSION

ILLUSTRATION TITLE	GROUP-FIG. NO.
SUSPENSION, REAR	
SUSPENSION, REAR WITH SHOCK ABSORBER CJ-5,6,7,8, SCRAMBLER	Fig. 17-100
SPRINGS, REAR CJ-5,6,7,8, SCRAMBLER	Fig. 17-200
SUSPENSION, REAR WITH SHOCK ABSORBERS XJ CHEROKEE, XJ WAGONEER	Fig. 17-300
SHOCK ABSORBER SYSTEM, REAR WITH AUTOMATIC LEVELING XJ CHEROKEE, XJ WAGONEER	Fig. 17-400
SUSPENSION, REAR WITH SHOCK ABSORBERS COMANCHE	Fig. 17-500
SUSPENSION, REAR WITH SHOCK ABSORBERS SJ CHEROKEE, SJ WAGONEER, J10, J20	Fig. 17-600
SHOCK ABSORBER SYSTEM, REAR WITH AIR ADJUSTABLE SHOCK ABSORBERS SJ CHEROKEE, SJ WAGONEER, J10	Fig. 17-700

ILLUSTRATION NOT AVAILABLE AT TIME OF PUBLICATION

SUSPENSION, REAR WITH SHOCK ABSORBER CJ-5,6,7,8, SCRAMBLER
Figure 17-100

81J17 100

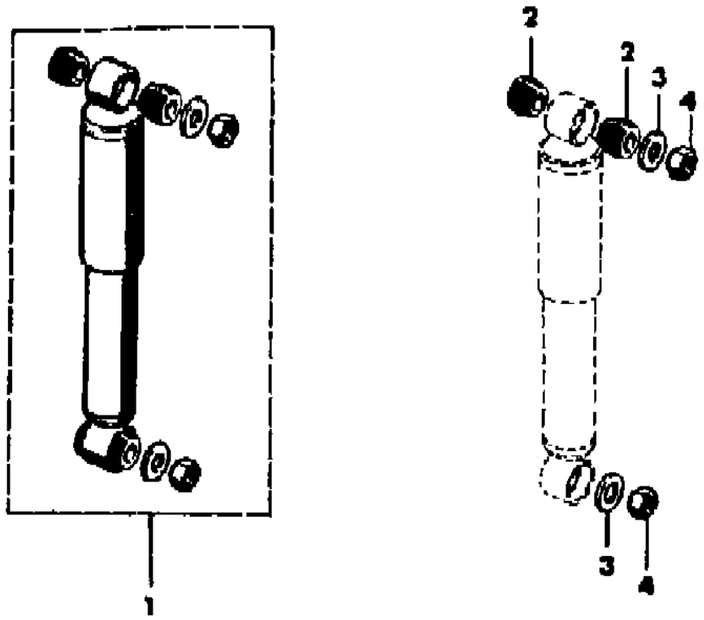

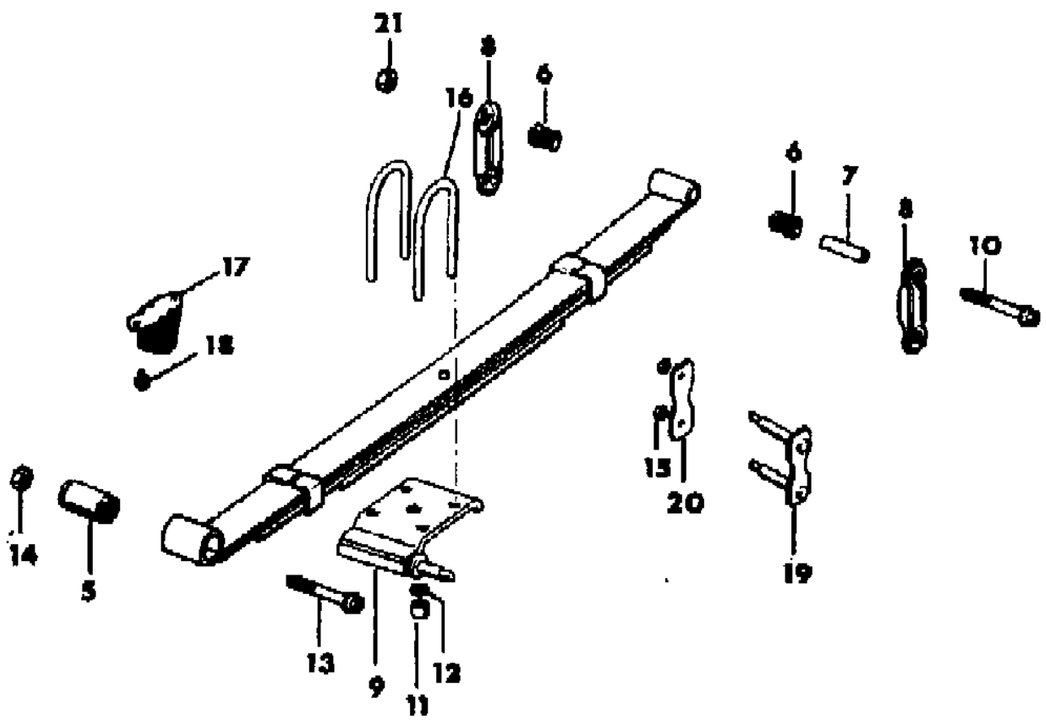

ITEM	PART NUMBER	QTY	BODY	MODEL	DESCRIPTION
1					SHOCK ABSORBER PACKAGE
					Standard Duty
	J813 3294	2			1981: Stamped 5353217
	J813 3848	2			1981: Stamped 5363751
	J813 3838	2			1982-86
					Soft Ride
	J813 4105	2		87	1982-86: Limited
					Heavy Duty
	J813 3295	2			1981
	J813 3839	2			1982-86
					Extra Heavy Duty
	J813 3296	2			1981
	J813 3840	2			1982-86
					Severe Use
	8350 0177	2		87,88	1983-86: EXPORT
2	J063 7936	4			BUSHING
3	J448 8495	AR			WASHER
4	J400 4311	AR			NUT, Lock
5	J535 5369	2			BUSHING
6	J535 5841	8			BUSHING
7					TUBE
	J536 4406	4			1982-86: Used with Shackle that requires two Hex Head Mounting Bolts
8					PLATE
	J536 4404	4			1982-86: Used with Shackle that requires two Hex Head Mounnting Bolts
9					PLATE
					Right
	J535 9008	1			1981
	J536 3440	1			1982-86: Used with 12 Bolt Rear Axle Cover (AMC Axle)
	5505 2682	1			1986: Used with 10 Bolt Rear Axle Cover (Dana Axle)
					Left
	J535 9007	1			1981
	J536 3439	1			1982-86: Used with 12 Bolt Rear Axle Cover (AMC Axle)
	5505 2681	1			1986: Used with 10 Bolt Rear Axle Cover (Dana Axle)
10	J045 6958	4			BOLT
11	J942 1085	8			NUT
12	J400 4808	8			WASHER
13	J941 9209	2			BOLT

MODEL CODES

16=Cherokee 2 Dr.(1981-83)	78=Cherokee 4WD-4 Dr.(1984-86)	64=Comanche 2WD-6 Ft. Box(1986)	25=J-10 Truck 7 Ft. Box(1981-84)
17=Cherokee 2 Dr.(1981-83)	85=CJ-5 (1981-83)	66=Comanche 2WD-7 Ft. Box(1986)	26=J10 Truck 8 Ft. Box(1981-86)
73=Cherokee 2WD-2 Dr.(1984-86)	86=CJ-6(1981)	63=Comanche 4WD-6 Ft. Box(1986)	27=J-20 Truck 8 Ft. Box(1981-86)
74=Cherokee 2WD-4 Dr.(1984-86)	87=CJ-7(1981-86)	65=Comanche 4WD-7 Ft. Box(1986)	15=Wagoneer 4 Dr.(1981-83)
18=Cherokee 4 Dr.(1981-83)	88=CJ-8, Scrambler(1981-86)	15=Grand Wagoneer 4 Dr.(1984-86)	75=Wagoneer 4WD-4 Dr.(1984-86)
77=Cherokee 4WD-2 Dr.(1984-86)			

BODY
CJ=CJ-5, CJ-6, CJ-7, CJ-8, Scrambler(1981-86)
MJ=Comanche Pickup(1986)

STYLES
SJ=Wagoneer(1981-83), Grand Wagoneer(1984-86), Cherokee(1981-83), J-10, J-20(1981-86)
XJ=Wagoneer(1984-86), Cherokee(1984-86)

AR = Use as Required - = Non Illustrated Part P.A.R. = Paint as Required

« RETURN TO GROUP INDEX »

SUSPENSION, REAR WITH SHOCK ABSORBER CJ-5,6,7,8, SCRAMBLER
Figure 17-100

81J17 100

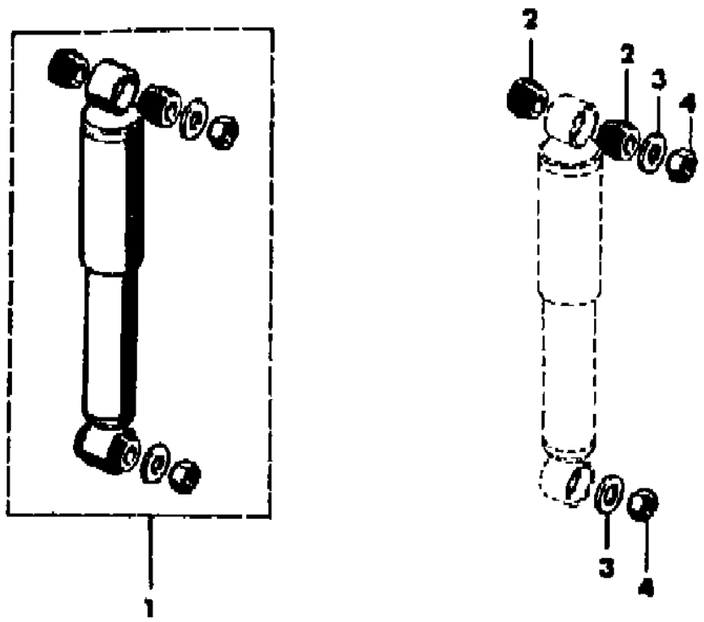

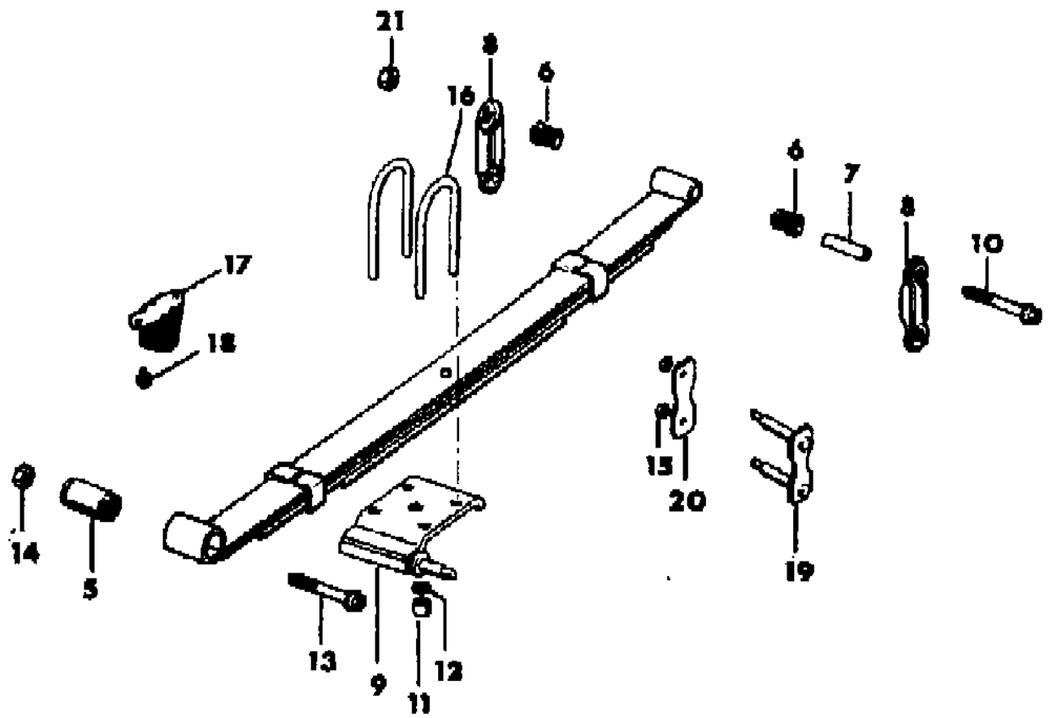

ITEM	PART NUMBER	QTY	BODY	MODEL	DESCRIPTION
14	J400 3979	2			NUT
15					NUT
	J941 6532	8			1981-82
16	J813 0369	4			U-BOLT
17	J535 5483	2			BUMPER
18	J400 5063	4			SCREW
19	J535 7499	2			SHACKLE
20	J535 7497	2			PLATE
21					NUT
	S941 3266	4			1982-86

MODEL CODES

16=Cherokee 2 Dr.(1981-83)
17=Cherokee 2 Dr.(1981-83)
73=Cherokee 2WD-2 Dr.(1984-86)
74=Cherokee 2WD-4 Dr.(1984-86)
18=Cherokee 4 Dr.(1981-83)
77=Cherokee 4WD-2 Dr.(1984-86)
78=Cherokee 4WD-4 Dr.(1984-86)
85=CJ-5 (1981-83)
86=CJ-6(1981)
87=CJ-7(1981-86)
88=CJ-8, Scrambler(1981-86)
64=Comanche 2WD-6 Ft. Box(1986)
66=Comanche 2WD-7 Ft. Box(1986)
63=Comanche 4WD-6 Ft. Box(1986)
65=Comanche 4WD-7 Ft. Box(1986)
15=Grand Wagoneer 4 Dr.(1984-86)
25=J-10 Truck 7 Ft. Box(1981-84)
26=J10 Truck 8 Ft. Box(1981-86)
27=J-20 Truck 8 Ft. Box(1981-86)
15=Wagoneer 4 Dr.(1981-83)
75=Wagoneer 4WD-4 Dr.(1984-86)

BODY
CJ=CJ-5, CJ-6, CJ-7, CJ-8, Scrambler(1981-86)
MJ=Comanche Pickup(1986)

STYLES
SJ=Wagoneer(1981-83), Grand Wagoneer(1984-86), Cherokee(1981-83), J-10, J-20(1981-86)
XJ=Wagoneer(1984-86), Cherokee(1984-86)

AR = Use as Required - = Non Illustrated Part P.A.R. = Paint as Required

« RETURN TO GROUP INDEX

SPRINGS, REAR CJ-5,6,7,8, SCRAMBLER
Figure 17-200

81J17 200

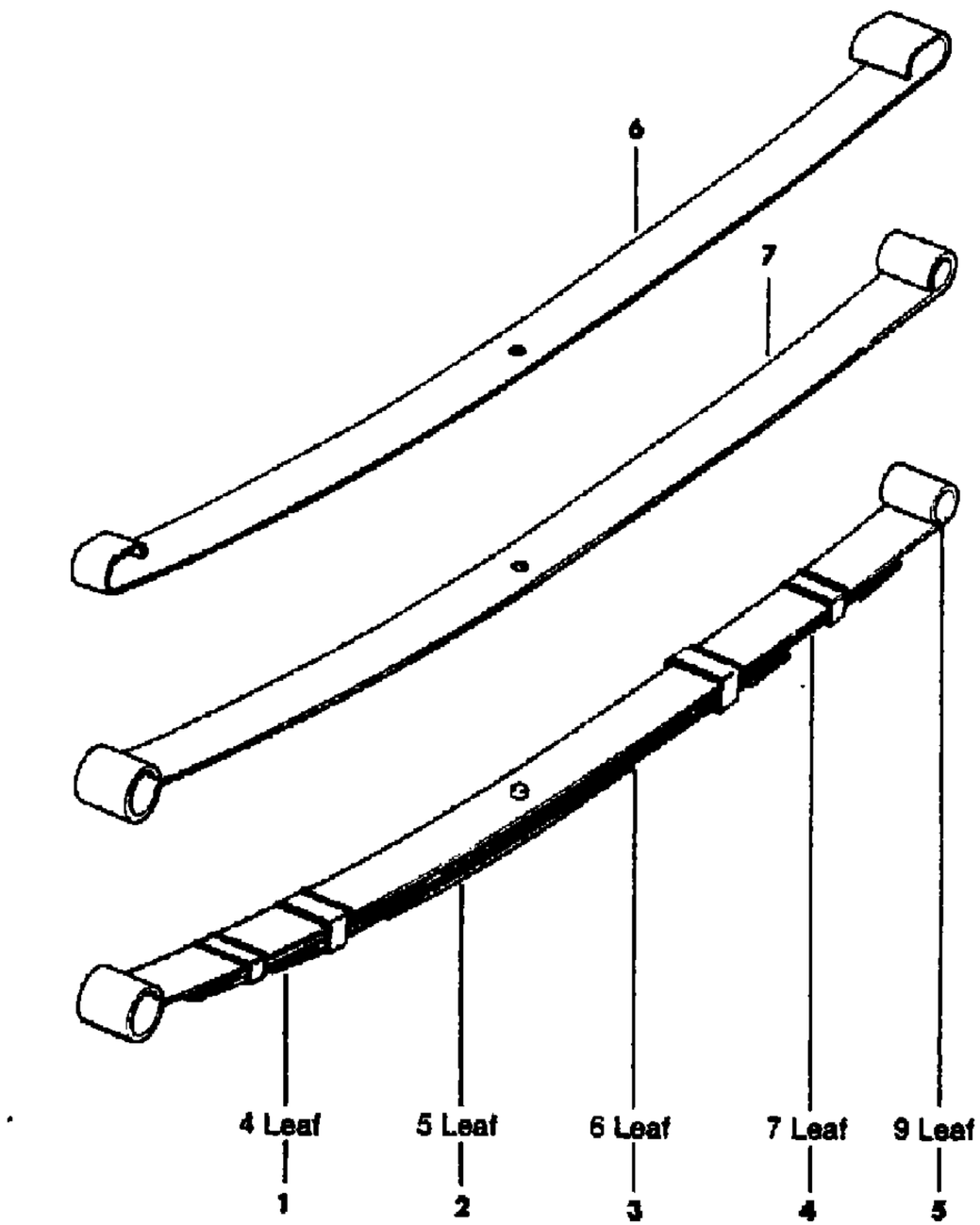

ITEM	PART NUMBER	QTY	BODY	MODEL	DESCRIPTION
1					SPRING ASSEMBLY, Light Duty ***
					Four Cylinder
	J535 6424	2			1981: Without Hardtop Enclosure, used with Serial No. 1 thru 057505
2					SPRING ASSEMBLY, Light Duty ***
	J535 6425	2			1981: With Hardtop Enclosure, used with Serial No. 1 thru 057505
					Four Cylinder
	J536 3330	2		85,87	1981: Without Hardtop Enclosure, used beginning with Serial No. 057506
	J536 3330	2		85	1982-83
	J536 3330	2		87	1982-86: Without Hardtop
	J536 3636	2		87	1982-86: Limited, Soft Ride
					Six Cylinder
	J536 3935	2		87	1982-86: Limited, Soft Ride
3					SPRING ASSEMBLY, Light Duty ***
	J536 3331	2		86,88	1981-86
					Four Cylinder
	J536 3332	2		85	1981: Diesel, EXPORT, used beginning with Serial No. 057506
	J536 3332	2		85	1982-83: Diesel, EXPORT
	J536 3331	2		86,88	1981: Diesel, EXPORT, used beginning with Serial No. 057506
	J536 3332	2		87	1981: Gas, used beginning with Serial No. 057506
	J536 3332	2		87	1981: Diesel, EXPORT, without Hardtop Enclosure, Used beginning with Serial No. 057506
	J536 3331	2		87	1981: Diesel, EXPORT, with Hardtop Enclosure, used beginning with Serial No. 057506
	J536 3332	2		87	1982-86: Gas, with Hardtop Enclosure
	J536 3332	2		87	1982-86: Diesel, EXPORT, without Hardtop Enclosure
	J536 3331	2		87	1982-86: Diesel, EXPORT, with Hardtop Enclosure
	J536 3331	2		88	1982-86: Diesel, EXPORT
					Six Cylinder
	J536 3332	2		85	1981: Used beginning with Serial No. 057506
	J536 3332	2		85	1982-83
	J536 3332	2		87	1981: Without Hardtop Enclosure, used beginning with Serial No. 057506
	J536 3331	2		87	1981: With Hardtop Enclosure, used beginning with Serial No. 057506
	J536 3332	2		87	1982-86: Without Hardtop Enclosure
	J536 3331	2		87	1982-86: With Hardtop Enclosure

MODEL CODES
16=Cherokee 2 Dr.(1981-83)
17=Cherokee 2 Dr.(1981-83)
73=Cherokee 2WD-2 Dr.(1984-86)
74=Cherokee 2WD-4 Dr.(1984-86)
18=Cherokee 4 Dr.(1981-83)
77=Cherokee 4WD-2 Dr.(1984-86)
78=Cherokee 4WD-4 Dr.(1984-86)
85=CJ-5 (1981-83)
86=CJ-6(1981)
87=CJ-7(1981-86)
88=CJ-8, Scrambler(1981-86)
64=Comanche 2WD-6 Ft. Box(1986)
66=Comanche 2WD-7 Ft. Box(1986)
63=Comanche 4WD-6 Ft. Box(1986)
65=Comanche 4WD-7 Ft. Box(1986)
15=Grand Wagoneer 4 Dr.(1984-86)
25=J-10 Truck 7 Ft. Box(1981-84)
26=J10 Truck 8 Ft. Box(1981-86)
27=J-20 Truck 8 Ft. Box(1981-86)
15=Wagoneer 4 Dr.(1981-83)
75=Wagoneer 4WD-4 Dr.(1984-86)

BODY
CJ=CJ-5, CJ-6, CJ-7, CJ-8, Scrambler(1981-86)
MJ=Comanche Pickup(1986)

STYLES
SJ=Wagoneer(1981-83), Grand Wagoneer(1984-86), Cherokee(1981-83), J-10, J-20(1981-86)
XJ=Wagoneer(1984-86), Cherokee(1984-86)

AR = Use as Required - = Non Illustrated Part P.A.R. = Paint as Required

81J17 200

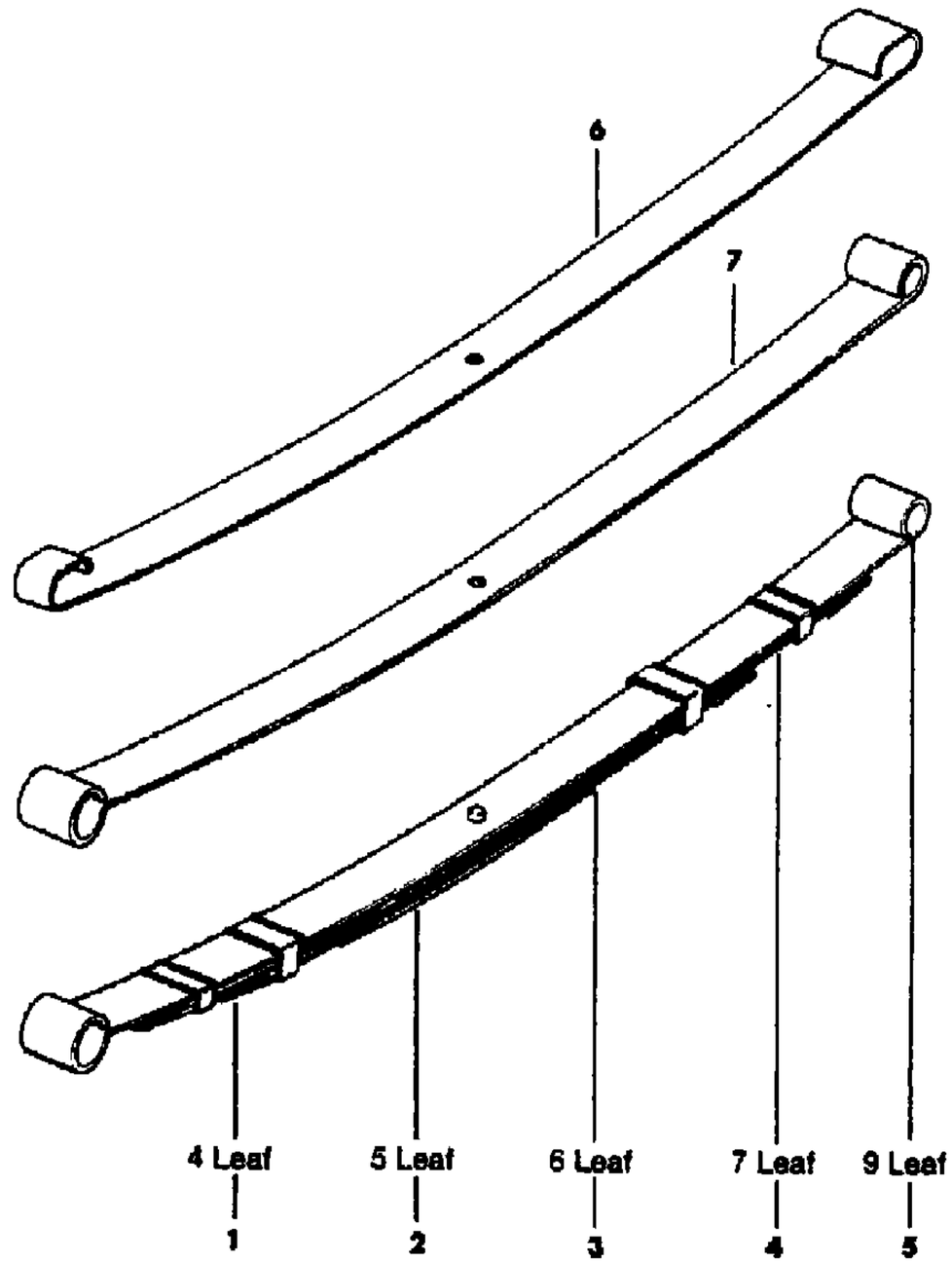

ITEM	PART NUMBER	QTY	BODY	MODEL	DESCRIPTION
					Eight Cylinder
	J536 3331	2		85	1981: Used beginning with Serial No. 057506
	J536 3331	2		87	1981: With Hardtop Enclosure, used beginning with Serial No. 057506
					SPRING ASSEMBLY, Heavy Duty ***
	J535 8940	2			1981: Used with Serial No. 1 thru 057505
	J536 3855	2		88	1982-86
					Four Cylinder
	J536 3334	2		85	1981: Used beginning with Serial No. 057506
	J536 3333	2		85	1981: Diesel, EXPORT, used beginning with Serial No. 057506
	J536 3854	2		85	1982-83
	J536 3333	2		85	1982: Diesel, EXPORT
	J536 3340	2		86,88	1981: Used beginning with Serial No. 057506
	J536 3340	2		86,88	1981: Diesel, EXPORT, used beginning with Serial No. 057506
	J536 3334	2		87	1981: Without Hardtop Enclosure, used beginning with Serial No. 057506
	J536 3333	2		87	1981: Diesel, EXPORT, without Hardtop Enclosure, used beginning with Serial No. 057506
	J536 3333	2		87	1981: With Hardtop Enclosure, used beginning with Serial No. 057506
	J536 3340	2		87	1981: Diesel, Export, with Hardtop Enclosure, used beginning with Serial No. 057506
	J536 3854	2		87	1982-86: Without Hardtop Enclosure
	J536 3333	2		87	1982: Diesel, EXPORT, Without Hardtop Enclosure
	J536 3853	2		87	1982-86: With Hardtop Enclosure
	J536 3340	2		87	1982: Diesel, EXPORT, with Hardtop Enclosure
	J536 3340	2		88	1982: Diesel, EXPORT
					Six Cylinder
	J536 3333	2		85	1981: used beginning with Serial No. 057506
	J536 3853	2		85	1982-83
	J536 3333	2		87	1981: Without Hardtop Enclosure, used beginning with Serial No. 057506
	J536 3340	2		87	1981: With Hardtop Enclosure, used beginning with Serial No. 057506
	J536 3333	2		87	1982-86: Without Hardtop Enclosure
	J536 3340	2		87	1982-86: With Hardtop Enclosure
					Eight Cylinder
	J536 3340	2		85	1981: Used beginning with Serial No. 057506
	J536 3333	2		87	1981: Without Hardtop, used beginning with Serial No. 057506

MODEL CODES
16=Cherokee 2 Dr.(1981-83)
17=Cherokee 2 Dr.(1981-83)
73=Cherokee 2WD-2 Dr.(1984-86)
74=Cherokee 2WD-4 Dr.(1984-86)
18=Cherokee 4 Dr.(1981-83)
77=Cherokee 4WD-2 Dr.(1984-86)
78=Cherokee 4WD-4 Dr.(1984-86)
85=CJ-5 (1981-83)
86=CJ-6(1981)
87=CJ-7(1981-86)
88=CJ-8, Scrambler(1981-86)
64=Comanche 2WD-6 Ft. Box(1986)
66=Comanche 2WD-7 Ft. Box(1986)
63=Comanche 4WD-6 Ft. Box(1986)
65=Comanche 4WD-7 Ft. Box(1986)
15=Grand Wagoneer 4 Dr.(1984-86)
25=J-10 Truck 7 Ft. Box(1981-84)
26=J10 Truck 8 Ft. Box(1981-86)
27=J-20 Truck 8 Ft. Box(1981-86)
15=Wagoneer 4 Dr.(1981-83)
75=Wagoneer 4WD-4 Dr.(1984-86)

BODY
CJ=CJ-5, CJ-6, CJ-7, CJ-8, Scrambler(1981-86)
MJ=Comanche Pickup(1986)

STYLES
SJ=Wagoneer(1981-83), Grand Wagoneer(1984-86), Cherokee(1981-83), J-10, J-20(1981-86)
XJ=Wagoneer(1984-86), Cherokee(1984-86)

AR = Use as Required - = Non Illustrated Part P.A.R. = Paint as Required

81J17 200

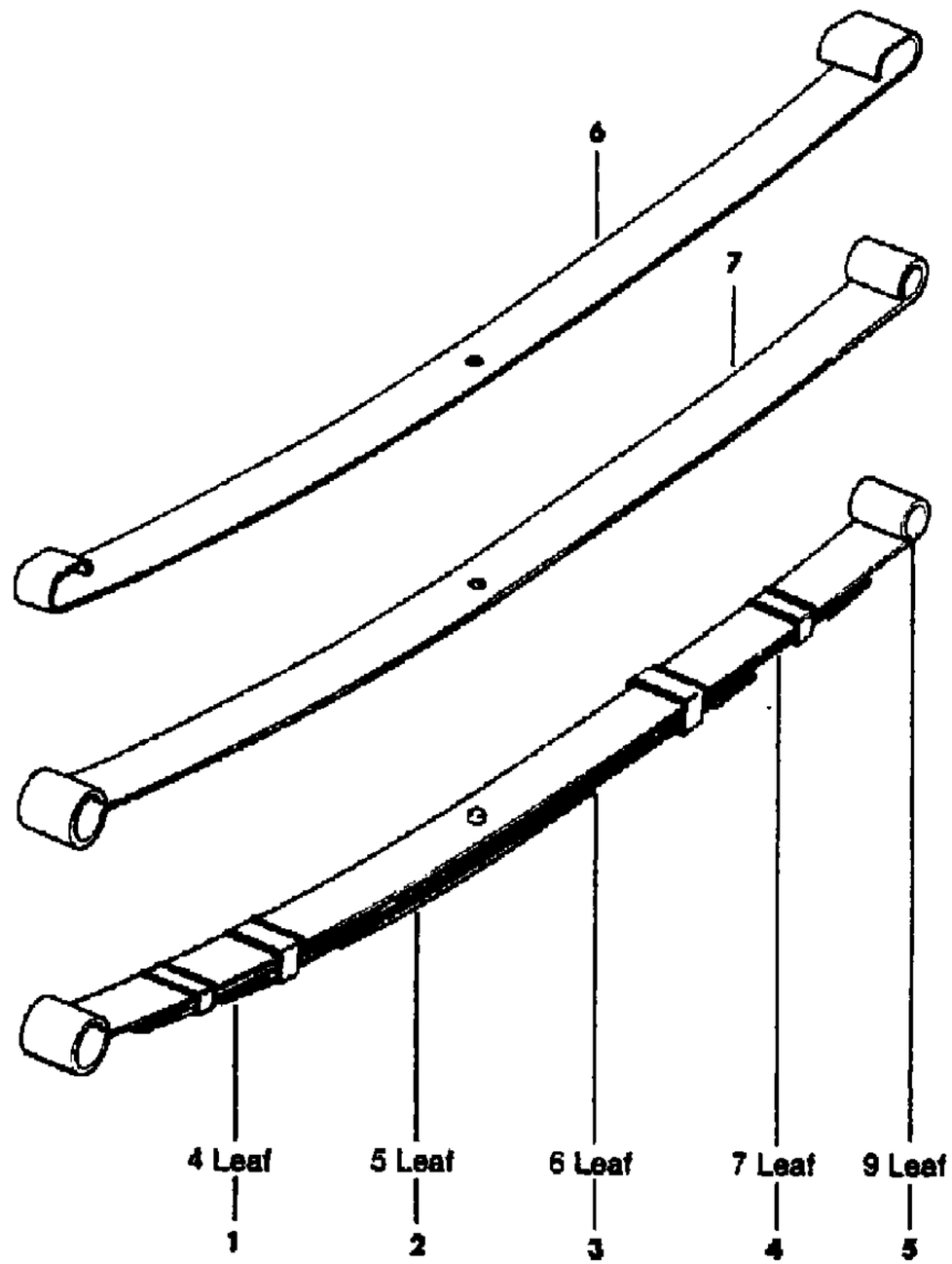

ITEM	PART NUMBER	QTY	BODY	MODEL	DESCRIPTION
	J536 3340	2		87	1981: With Hardtop, used beginning with Serial No. 057506
4					SPRING ASSEMBLY, Heavy Duty ***
	J535 6426	2			1981: Used with Serial No. 1 thru 057505
	J535 6426	2			1981: Diesel, EXPORT
	J536 4231	2		85,87,8	1982-86: EXPORT
5					SPRING ASSEMBLY, Extra Heavy Duty ***
	J535 6423	2			1981
	J535 6423	2			1981: Diesel, EXPORT
	J536 4232	2		85,87,8	1982-86: EXPORT
6					LEAF, Rear Spring, No. 1 ***
					Five Leaf, Light Duty
	J999 9272	2			1981: With Hardtop Enclosure, used with Serial No. 1 thru 057505
					Four Cylinder
	J999 9247	2		85	1982-83
	J999 9247	2		85,87	1981: Without Hardtop, used beginning with Serial No. 057506
	J999 9247	2		87	1982-86: Without Hardtop
	J999 9241	2		87	1982-86: Limited
					Six Cylinder
	J999 9234	2		87	1982-86: Limited
					Six Leaf, Light Duty
	J999 9246	2		86,88	1981: Used beginning with Serial No. 057506
	J999 9246	2		88	1982-86
					Four Cylinder
	J999 9245	2		85	1981: Diesel, EXPORT, used beginning with Serial No. 057506
	J999 9245	2		85	1982-83: Diesel, EXPORT
	J999 9245	2		85	1981: Diesel, EXPORT, used beginning with Serial No. 057506
	J999 9246	2		86,88	1981: Diesel, EXPORT, used beginning with Serial No. 057506
	J999 9245	2		87	1981: Used beginning with Serial No. 057506
	J999 9245	2		87	1981: Diesel, EXPORT, without Hardtop Enclosure, used beginning with Serial No. 057506
	J999 9246	2		87	1981: Diesel, EXPORT, with Hardtop Enclosure, used beginning with Serial No. 057506
	J999 9245	2		87	1982-86: With Hardtop Enclosure
	J999 9245	2		87	1982-86: Diesel, EXPORT, without Hardtop Enclosure
	J999 9246	2		87	1982-86: Diesel, EXPORT, with Hardtop Enclosure
	J999 9246	2		88	1982-86: Diesel, EXPORT
					Six Cylinder
	J999 9245	2		85	1981: Used beginning with Serial No. 057506
	J999 9245	2		85	1982-83

MODEL CODES
16=Cherokee 2 Dr.(1981-83)
17=Cherokee 2 Dr.(1981-83)
73=Cherokee 2WD-2 Dr.(1984-86)
74=Cherokee 2WD-4 Dr.(1984-86)
18=Cherokee 4 Dr.(1981-83)
77=Cherokee 4WD-2 Dr.(1984-86)
78=Cherokee 4WD-4 Dr.(1984-86)
85=CJ-5 (1981-83)
86=CJ-6(1981)
87=CJ-7(1981-86)
88=CJ-8, Scrambler(1981-86)
64=Comanche 2WD-6 Ft. Box(1986)
66=Comanche 2WD-7 Ft. Box(1986)
63=Comanche 4WD-6 Ft. Box(1986)
65=Comanche 4WD-7 Ft. Box(1986)
15=Grand Wagoneer 4 Dr.(1984-86)
25=J-10 Truck 7 Ft. Box(1981-84)
26=J10 Truck 8 Ft. Box(1981-86)
27=J-20 Truck 8 Ft. Box(1981-86)
15=Wagoneer 4 Dr.(1981-83)
75=Wagoneer 4WD-4 Dr.(1984-86)

BODY
CJ=CJ-5, CJ-6, CJ-7, CJ-8, Scrambler(1981-86)
MJ=Comanche Pickup(1986)

STYLES
SJ=Wagoneer(1981-83), Grand Wagoneer(1984-86), Cherokee(1981-83), J-10, J-20(1981-86)
XJ=Wagoneer(1984-86), Cherokee(1984-86)

AR = Use as Required - = Non Illustrated Part P.A.R. = Paint as Required

81J17 200

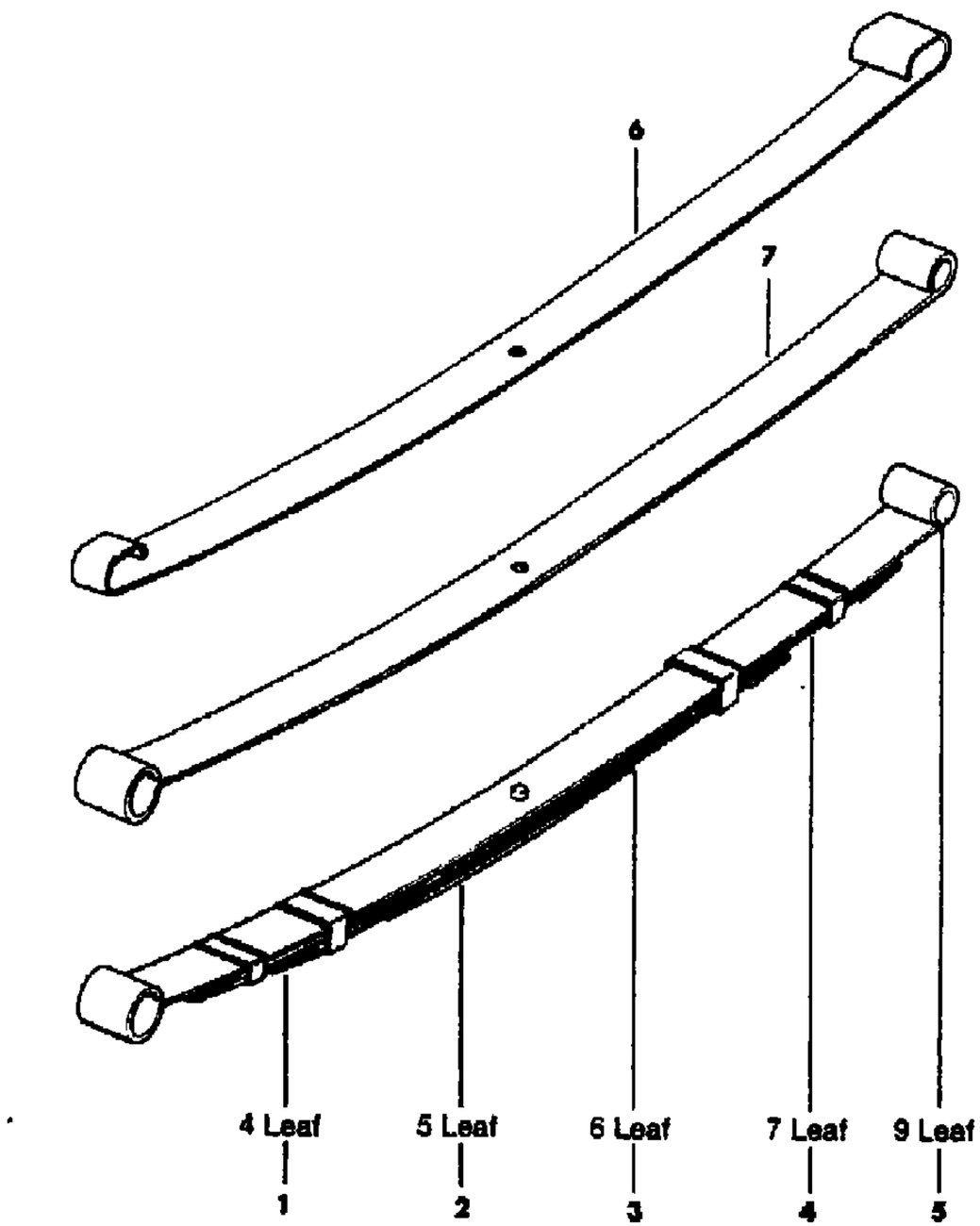

ITEM	PART NUMBER	QTY	BODY	MODEL	DESCRIPTION
	J999 9245	2		87	1981: Without Hardtop Enclosure, used beginning with Serial No. 057506
	J999 9246	2		87	1981: With Hardtop Enclosure, used beginning with Serial No. 057506
	J999 9245	2		87	1982-86: Without Hardtop Enclosure
	J999 9246	2		87	1982-86: With Hardtop Enclosure
					Eight Cylinder
	J999 9246	2		85	1981: Used beginning with Serial No. 057506
	J999 9246	2		87	1981: With Hardtop Enclosure, Used beginning with Serial No. 057506
					Six Leaf, Heavy Duty
	J999 9265	2			1981: Used with Serial No. 1 thru 057505
	J999 9235	2		88	1982-86
					Four Cylinder
	J999 9243	2		85	1981: Used beginning with Serial No. 057506
	J999 9244	2		85	1981: Diesel, EXPORT, used beginning with Serial No. 057506
	J999 9244	2		85	1982: Diesel, EXPORT
	J999 9236	2		85	1982-83
	J999 9242	2		86,88	1981: Used beginning with Serial No. 057506
	J999 9242	2		86,88	1981: Diesel, EXPORT, used beginning with Serial No. 057506
	J999 9243	2		87	1981: Without Hardtop Enclosure, used with Serial No. 1 thru 057505
	J999 9244	2		87	1981: Diesel, EXPORT, without Hardtop Enclosure, used beginning with Serial No. 057506
	J999 9244	2		87	1981: With Hardtop Enclosure, used beginning with Serial No. 057506
	J999 9242	2		87	1982: With Hardtop Enclosure, Used beginning with Serial No. 057506
	J999 9244	2		87	1982: Diesel, EXPORT, without Hardtop Enclosure
	J999 9242	2		87	1982: Diesel, EXPORT, with Hardtop Enclosure
	J999 9236	2		87	1982-86: Without hardtop Enclosure
	J999 9237	2		87	1982-86: With Hardtop Enclosure
	J999 9242	2		88	1982: Diesel, EXPORT
					Six Cylinder
	J999 9244	2		85	1981: Used beginning with Serial No. 057506
	J999 9237	2		85	1982-83
	J999 9242	2		86,88	1981: Without Hardtop, used beginning with Serial No. 057506
	J999 9244	2		87	1981: Without Hardtop, used beginning with Serial No. 057506

MODEL CODES
16=Cherokee 2 Dr.(1981-83)
17=Cherokee 2 Dr.(1981-83)
73=Cherokee 2WD-2 Dr.(1984-86)
74=Cherokee 2WD-4 Dr.(1984-86)
18=Cherokee 4 Dr.(1981-83)
77=Cherokee 4WD-2 Dr.(1984-86)
78=Cherokee 4WD-4 Dr.(1984-86)
85=CJ-5 (1981-83)
86=CJ-6(1981)
87=CJ-7(1981-86)
88=CJ-8, Scrambler(1981-86)
64=Comanche 2WD-6 Ft. Box(1986)
66=Comanche 2WD-7 Ft. Box(1986)
63=Comanche 4WD-6 Ft. Box(1986)
65=Comanche 4WD-7 Ft. Box(1986)
15=Grand Wagoneer 4 Dr.(1984-86)
25=J-10 Truck 7 Ft. Box(1981-84)
26=J10 Truck 8 Ft. Box(1981-86)
27=J-20 Truck 8 Ft. Box(1981-86)
15=Wagoneer 4 Dr.(1981-83)
75=Wagoneer 4WD-4 Dr.(1984-86)

BODY
CJ=CJ-5, CJ-6, CJ-7, CJ-8, Scrambler(1981-86)
MJ=Comanche Pickup(1986)

STYLES
SJ=Wagoneer(1981-83), Grand Wagoneer(1984-86), Cherokee(1981-83), J-10, J-20(1981-86)
XJ=Wagoneer(1984-86), Cherokee(1984-86)

AR = Use as Required - = Non Illustrated Part P.A.R. = Paint as Required

81J17 200

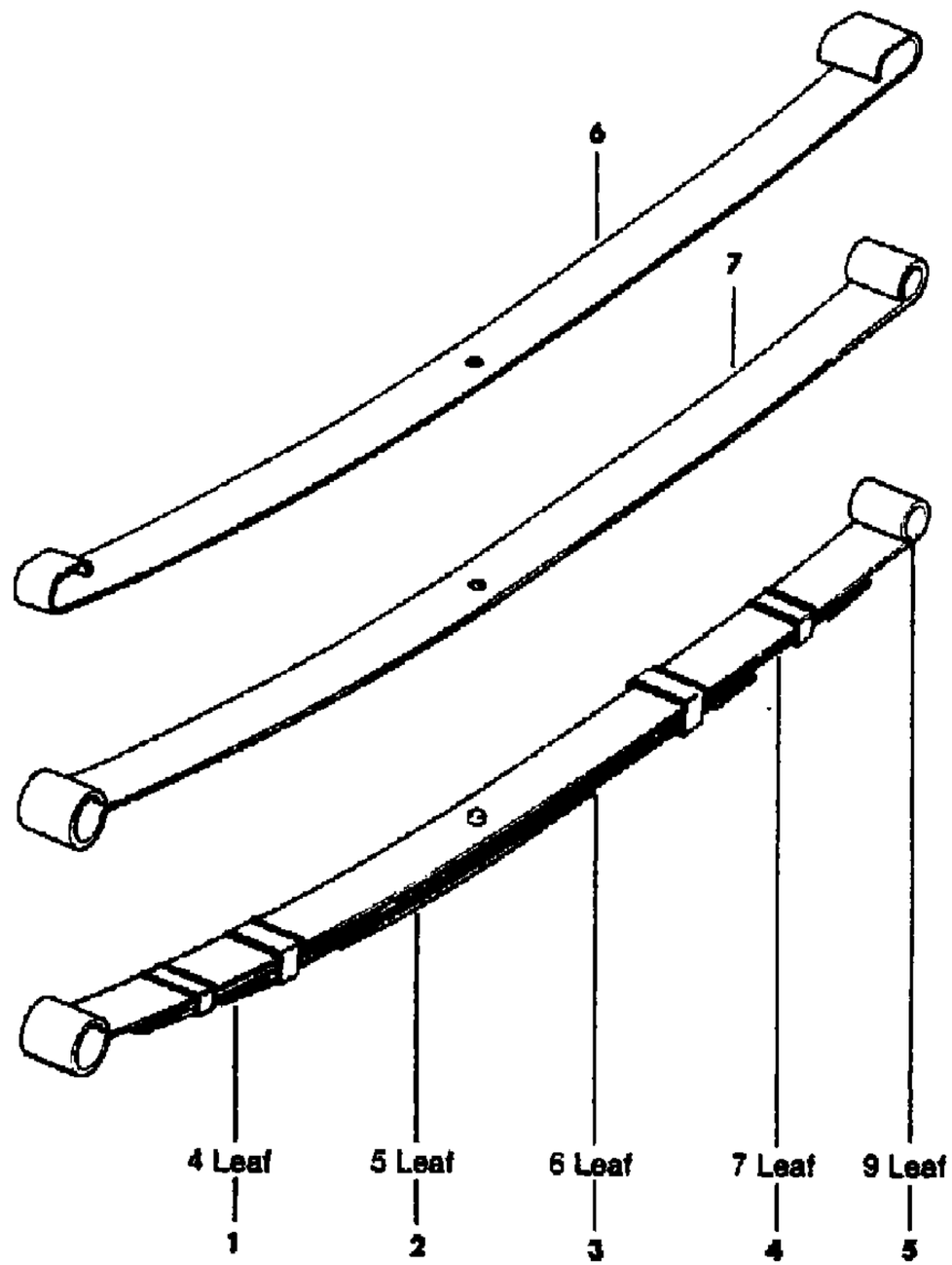

ITEM	PART NUMBER	QTY	BODY	MODEL	DESCRIPTION
	J999 9242	2		87	1981: With Hardtop Enclosure, used beginning with Serial No. 057506
	J999 9244	2		87	1982-86: Without Hardtop Enclosure
	J999 9242	2		87	1982-86: With Hardtop Enclosure
					Eight Cylinder
	J999 9242	2		85	1981: Used beginning with Serial No. 057506.
	J999 9244	2		87	1981: Without Hardtop Enclosure, used beginning with Serial No. 057506
	J999 9242	2		87	1981: With Hardtop Enclosure, used beginning with Serial No. 057506
					Seven Leaf, Heavy Duty
	J999 9271	2			1981: Used with Serial No. 1 thru 057505
	J999 9271	2			1981: Diesel, EXPORT
	J813 4353	2		85,87,8	1982-86: EXPORT
					Nine Leaf, Heavy Duty
	J999 9273	2			1981
					Nine Leaf, Extra Heavy Duty
	J999 9273	2			1981: Diesel, EXPORT
	J813 4355	2		85,87,8	1982-86: EXPORT
7					LEAF, Rear Spring, No. 2 ***
					Seven Leaf, Heavy Duty
	J999 9136	2			1981: Used with Serial No. 1 thru 057505
	J999 9136	2			1981: Diesel, EXPORT
	J813 4354	2		85,87,8	1982-86: EXPORT
					Nine Leaf, Heavy Duty
	J999 9273	2			1981
					Nine Leaf, Extra Heavy Duty
	J999 9273	2			1981: Diesel, EXPORT
	J813 4356	2		85,87,8	1982-86: EXPORT

MODEL CODES

16=Cherokee 2 Dr.(1981-83)	78=Cherokee 4WD-4 Dr.(1984-86)	64=Comanche 2WD-6 Ft. Box(1986)	25=J-10 Truck 7 Ft. Box(1981-84)
17=Cherokee 2 Dr.(1981-83)	85=CJ-5 (1981-83)	66=Comanche 2WD-7 Ft. Box(1986)	26=J10 Truck 8 Ft. Box(1981-86)
73=Cherokee 2WD-2 Dr.(1984-86)	86=CJ-6(1981)	63=Comanche 4WD-6 Ft. Box(1986)	27=J-20 Truck 8 Ft. Box(1981-86)
74=Cherokee 2WD-4 Dr.(1984-86)	87=CJ-7(1981-86)	65=Comanche 4WD-7 Ft. Box(1986)	15=Wagoneer 4 Dr.(1981-83)
18=Cherokee 4 Dr.(1981-83)	88=CJ-8, Scrambler(1981-86)	15=Grand Wagoneer 4 Dr.(1984-86)	75=Wagoneer 4WD-4 Dr.(1984-86)
77=Cherokee 4WD-2 Dr.(1984-86)			

BODY
CJ=CJ-5, CJ-6, CJ-7, CJ-8, Scrambler(1981-86)
MJ=Comanche Pickup(1986)

STYLES
SJ=Wagoneer(1981-83), Grand Wagoneer(1984-86), Cherokee(1981-83), J-10, J-20(1981-86)
XJ=Wagoneer(1984-86), Cherokee(1984-86)

AR = Use as Required - = Non Illustrated Part P.A.R. = Paint as Required

SUSPENSION, REAR WITH SHOCK ABSORBERS XJ CHEROKEE, XJ WAGONEER
Figure 17-300

81J17 300

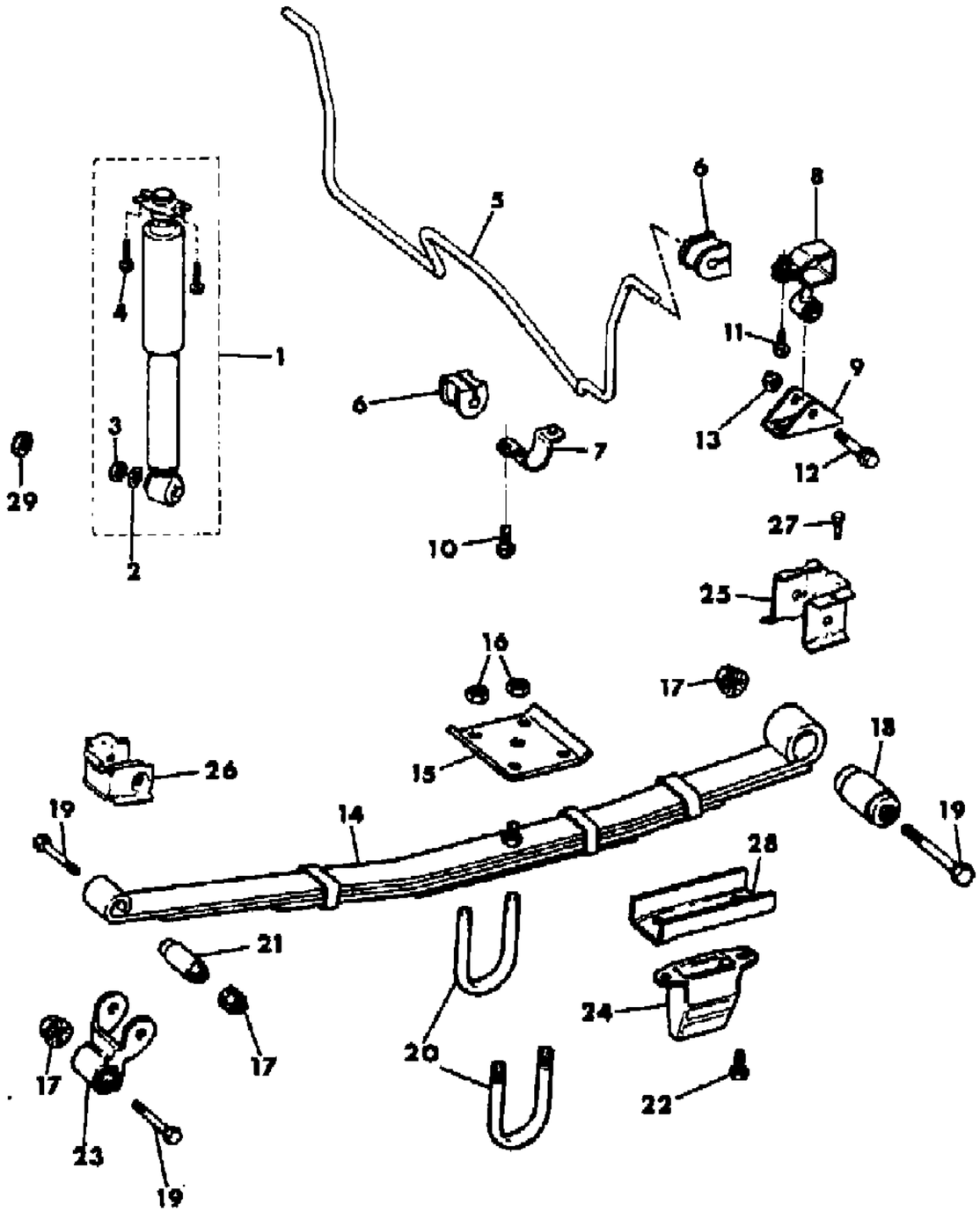

ITEM	PART NUMBER	QTY	BODY	MODEL	DESCRIPTION
1					SHOCK ABSORBER PACKAGE, Without Automatic Leveling
					Light Duty
	8350 0316	2			Stamped 8952001212
	8350 1160	2			Stamped 8952001567 or 52001567
					Standard Duty
	8350 0315	2			Stamped 8952001210
	8350 1159	2			Stamped 8952001565 or 52001565
					Heavy Duty
	8350 0317	2			Stamped 8952001211
	8350 1161	2			Stamped 8952001566
	8350 2515	2			Stamped 8952002385 or 52002385
	8350 4212	2			Stamped 8952003286 or 52003286
2	J448 8495	AR			WASHER
3	1150 0756	AR			NUT: M12-1.75 ***
4	J420 0089	4			SCREW
5					STABILIZER ***
	5200 1088	1			1984-85
	5200 1135	1			1986
6					CUSHION, Stabilizer
	5200 1090	4			Red
	5200 1145	1			Yellow
7	5200 1085	2			CLAMP
8	5200 1094	2			LINK
9	5200 1095	2			BRACKET
10	3420 1321	4			BOLT
11	3420 1756	2			BOLT
12	1150 5098	2			BOLT
13	1150 2813	2			NUT
14					SPRING ASSEMBLY, Rear ***
					Light Duty
	5200 0047	2			Stamped LE
	5200 0048	2			Stamped LH
	5200 1191	2			Stamped LP
					Standard Duty
	5200 0050	2			Stamped LB
	5200 0051	2			Stamped LC
	5200 0706	2			Stamped LN
					Heavy Duty
	5200 0544	2			Stamped LK

MODEL CODES
16=Cherokee 2 Dr.(1981-83)
17=Cherokee 2 Dr.(1981-83)
73=Cherokee 2WD-2 Dr.(1984-86)
74=Cherokee 2WD-4 Dr.(1984-86)
18=Cherokee 4 Dr.(1981-83)
77=Cherokee 4WD-2 Dr.(1984-86)
78=Cherokee 4WD-4 Dr.(1984-86)
85=CJ-5 (1981-83)
86=CJ-6(1981)
87=CJ-7(1981-86)
88=CJ-8, Scrambler(1981-86)
64=Comanche 2WD-6 Ft. Box(1986)
66=Comanche 2WD-7 Ft. Box(1986)
63=Comanche 4WD-6 Ft. Box(1986)
65=Comanche 4WD-7 Ft. Box(1986)
15=Grand Wagoneer 4 Dr.(1984-86)
25=J-10 Truck 7 Ft. Box(1981-84)
26=J10 Truck 8 Ft. Box(1981-86)
27=J-20 Truck 8 Ft. Box(1981-86)
15=Wagoneer 4 Dr.(1981-83)
75=Wagoneer 4WD-4 Dr.(1984-86)

BODY
CJ=CJ-5, CJ-6, CJ-7, CJ-8, Scrambler(1981-86)
MJ=Comanche Pickup(1986)

STYLES
SJ=Wagoneer(1981-83), Grand Wagoneer(1984-86), Cherokee(1981-83), J-10, J-20(1981-86)
XJ=Wagoneer(1984-86), Cherokee(1984-86)

AR = Use as Required - = Non Illustrated Part P.A.R. = Paint as Required

« RETURN TO GROUP INDEX »

SUSPENSION, REAR WITH SHOCK ABSORBERS XJ CHEROKEE, XJ WAGONEER
Figure 17-300

81J17 300

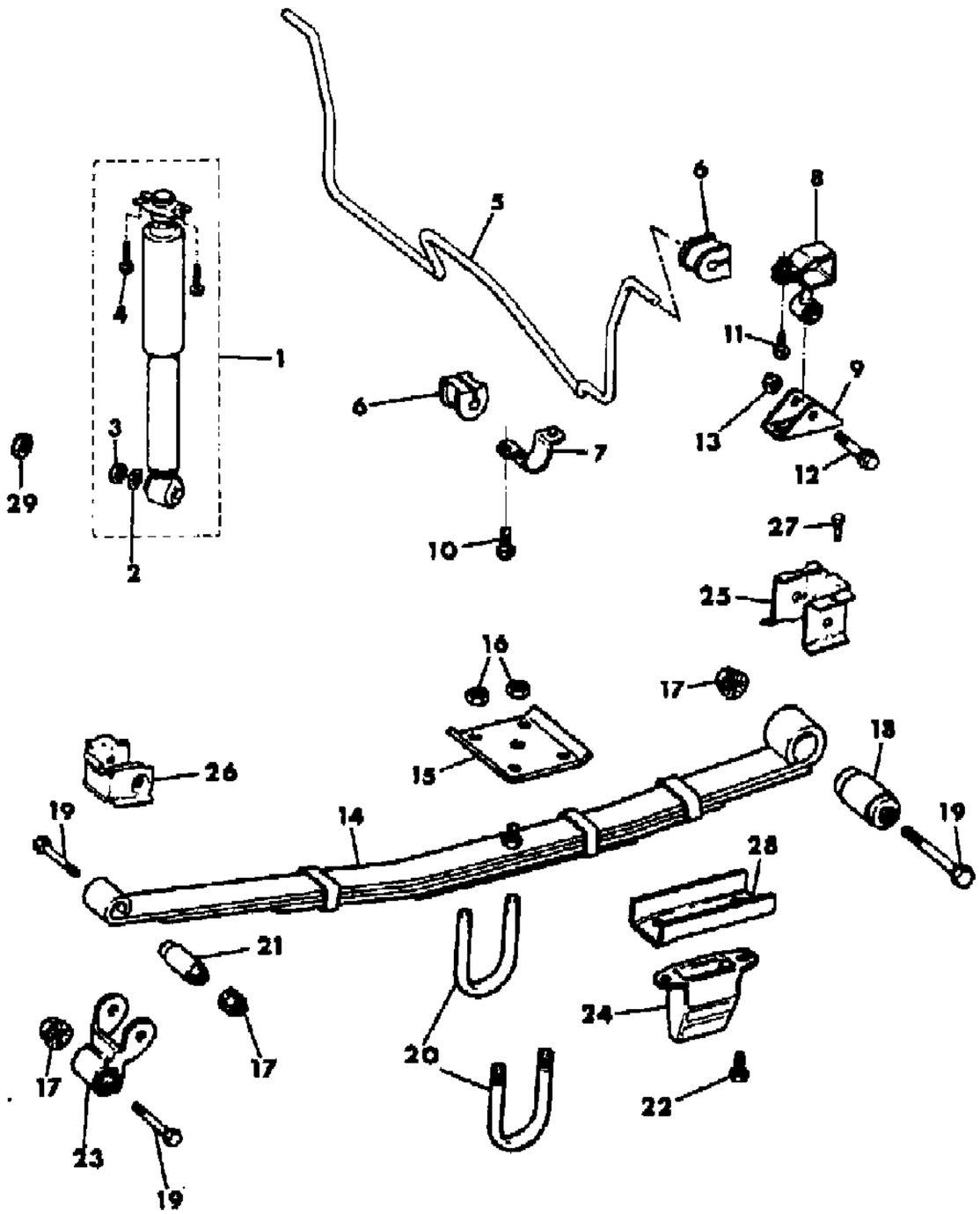

ITEM	PART NUMBER	QTY	BODY	MODEL	DESCRIPTION
	5200 0545	2			Stamped LL
	5200 0707	2			Stamped LM
	5200 2390	2			Stamped LS
	5200 2392	2			Stamped LT
15					PLATE
	5200 0508	2			1984-85
	5200 3500	2			1986
16	1150 2813	8			NUT
17	1150 2814	6			NUT
18	5200 0503	2			BUSHING
19	3420 1392	6			BOLT
20					U-BOLT
	5200 0232	4			77mm
	5200 3499	4			83mm
21	5200 0504	2			BUSHING
22					SCREW
	3420 1193	4			25mm
	3420 2079	4			83mm
21	5200 0504	2			BUSHING
22					SCREW
	3420 1193	4			25mm
	3420 2079	4			83mm
23	5200 0507	2			SHACKLE
24					BUMPER, Rear Axle Jounce
	5200 0509	2			1984-85
					1986
	5200 2733	2			74mm
	5200 2393	2			104mm
25	5500 1100-1	1			BRACKET
26	5500 1102-3	1			BRACKET
27	3420 1559	2			BOLT
28	5200 2386	2			REINFORCEMENT
29	J010 3028	2			NUT: 1/2"-20 ***

Note: Shock Absorbers should be changed in pairs.

MODEL CODES
16=Cherokee 2 Dr.(1981-83)
17=Cherokee 2 Dr.(1981-83)
73=Cherokee 2WD-2 Dr.(1984-86)
74=Cherokee 2WD-4 Dr.(1984-86)
18=Cherokee 4 Dr.(1981-83)
77=Cherokee 4WD-2 Dr.(1984-86)
78=Cherokee 4WD-4 Dr.(1984-86)
85=CJ-5 (1981-83)
86=CJ-6(1981)
87=CJ-7(1981-86)
88=CJ-8, Scrambler(1981-86)
64=Comanche 2WD-6 Ft. Box(1986)
66=Comanche 2WD-7 Ft. Box(1986)
63=Comanche 4WD-6 Ft. Box(1986)
65=Comanche 4WD-7 Ft. Box(1986)
15=Grand Wagoneer 4 Dr.(1984-86)
25=J-10 Truck 7 Ft. Box(1981-84)
26=J10 Truck 8 Ft. Box(1981-86)
27=J-20 Truck 8 Ft. Box(1981-86)
15=Wagoneer 4 Dr.(1981-83)
75=Wagoneer 4WD-4 Dr.(1984-86)

BODY
CJ=CJ-5, CJ-6, CJ-7, CJ-8, Scrambler(1981-86)
MJ=Comanche Pickup(1986)

STYLES
SJ=Wagoneer(1981-83), Grand Wagoneer(1984-86), Cherokee(1981-83), J-10, J-20(1981-86)
XJ=Wagoneer(1984-86), Cherokee(1984-86)

AR = Use as Required - = Non Illustrated Part P.A.R. = Paint as Required

« RETURN TO GROUP INDEX

SHOCK ABSORBER SYSTEM, REAR WITH AUTOMATIC LEVELING XJ CHEROKEE, XJ WAGONEER
Figure 17-400

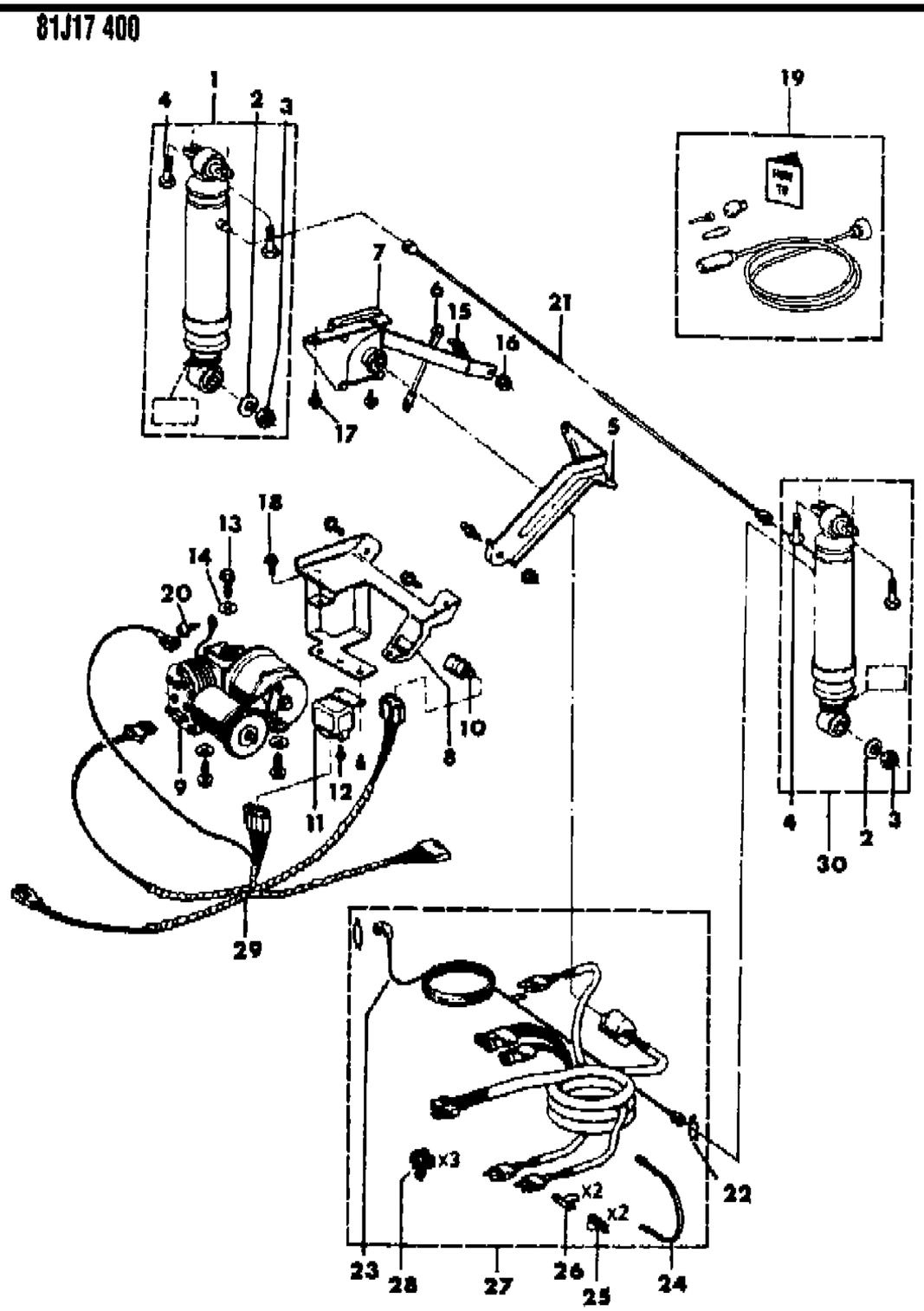

ITEM	PART NUMBER	QTY	BODY	MODEL	DESCRIPTION
1					SHOCK ABSORBER PACKAGE, With Automatic Leveling
	8350 0326	1			Stamped 8952000034
	8350 1188	1			Stamped 8952001515
2	J448 8495	2			WASHER
3	1150 0756	2			NUT
4	J420 0089	4			SCREW
5	5200 0737	1			BRACKET
6	5200 0739	1			LINK
7	5200 0735	1			SENSOR, Automatic Leveling
8	5200 0743	1			BRACKET
9	J323 6920	1			COMPRESSOR, Automatic Leveling
10	J323 6168	1			SWITCH, Automatic Leveling
11	J324 2451	1			RELAY, Automatic Leveling
12	J400 5466	2			SCREW
13	J400 6756	3			SCREW
14	J400 3933	3			WASHER
15	J420 0415	2			STUD, Ball
16	1150 3739	2			NUT
17	1150 0986	2			SCREW
18	1150 2453	3			SCREW
19	J325 1338	1			ADAPTER PACKAGE, Air Compressor ***
20	J812 0054	1			SCREW
21	5200 0175	1			TUBE
22	J813 1724	4			CLIP
23					TUBE
	5200 0174	1			1984-85
	5200 1232	1			1986
24	J322 3227	AR			STRAP
25	J417 5263	AR			CLIP
26	J417 5218	AR			CLIP
27					HARNESS, Shock Absorber
	5600 1031	1			Without System Sentry
	5600 1032	1			With System Sentry
28	J417 5225	AR			CLIP, With System Sentry
29	5600 1033	1			HARNESS, Shock Absorber
30					SHOCK ABSORBER PACKAGE, Automatic Leveling
	8350 0327	1			Stamped 8952000035
	8350 1189	1			Stamped 8952001514

MODEL CODES
16=Cherokee 2 Dr.(1981-83)
17=Cherokee 2 Dr.(1981-83)
73=Cherokee 2WD-2 Dr.(1984-86)
74=Cherokee 2WD-4 Dr.(1984-86)
18=Cherokee 4 Dr.(1981-83)
77=Cherokee 4WD-2 Dr.(1984-86)
78=Cherokee 4WD-4 Dr.(1984-86)
85=CJ-5 (1981-83)
86=CJ-6(1981)
87=CJ-7(1981-86)
88=CJ-8, Scrambler(1981-86)
64=Comanche 2WD-6 Ft. Box(1986)
66=Comanche 2WD-7 Ft. Box(1986)
63=Comanche 4WD-6 Ft. Box(1986)
65=Comanche 4WD-7 Ft. Box(1986)
15=Grand Wagoneer 4 Dr.(1984-86)
25=J-10 Truck 7 Ft. Box(1981-84)
26=J10 Truck 8 Ft. Box(1981-86)
27=J-20 Truck 8 Ft. Box(1981-86)
15=Wagoneer 4 Dr.(1981-83)
75=Wagoneer 4WD-4 Dr.(1984-86)

BODY
CJ=CJ-5, CJ-6, CJ-7, CJ-8, Scrambler(1981-86)
MJ=Comanche Pickup(1986)

STYLES
SJ=Wagoneer(1981-83), Grand Wagoneer(1984-86), Cherokee(1981-83), J-10, J-20(1981-86)
XJ=Wagoneer(1984-86), Cherokee(1984-86)

AR = Use as Required - = Non Illustrated Part P.A.R. = Paint as Required

« RETURN TO GROUP INDEX

SUSPENSION, REAR WITH SHOCK ABSORBERS COMANCHE
Figure 17-500

81J17 500

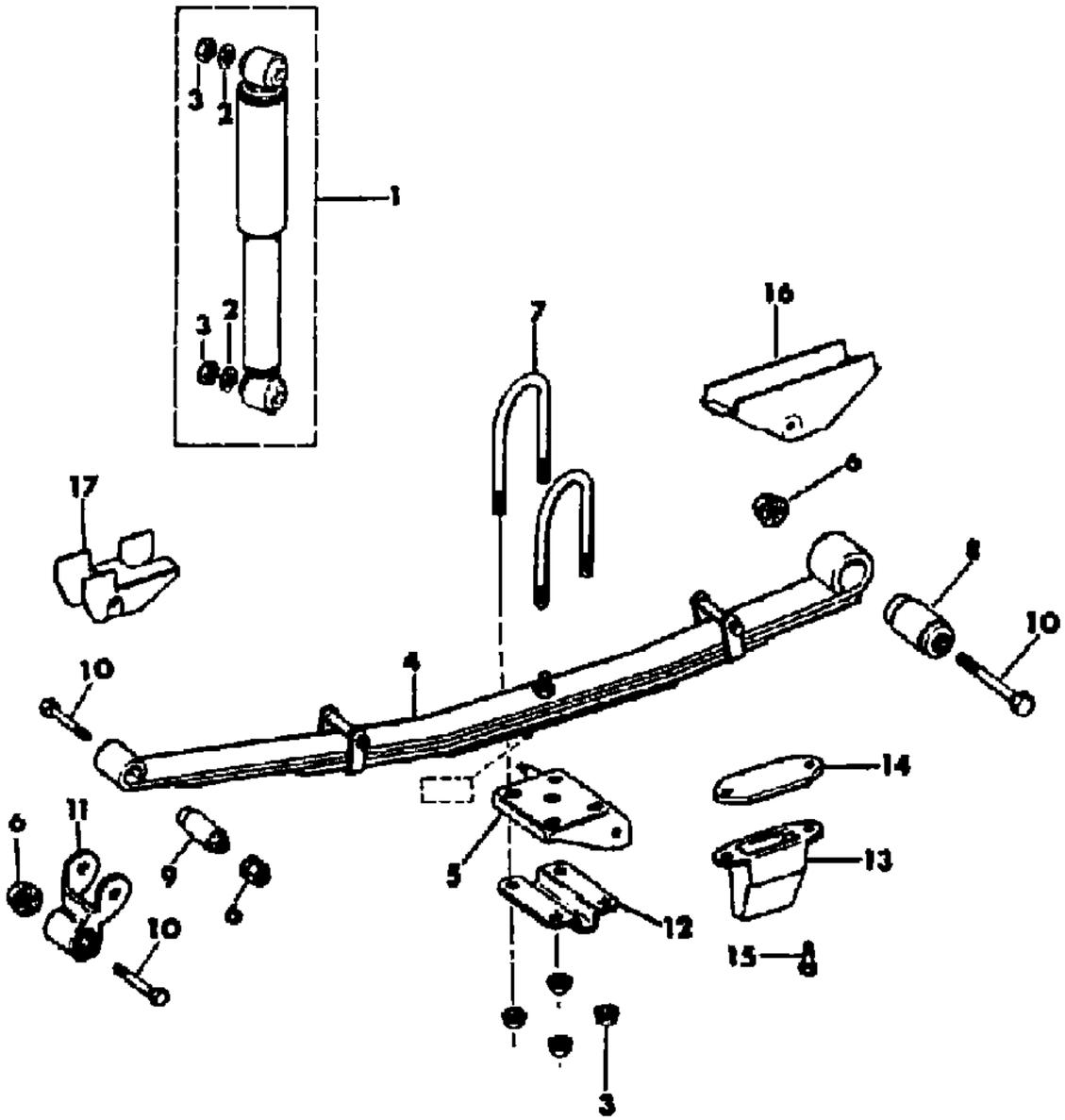

ITEM	PART NUMBER	QTY	BODY	MODEL	DESCRIPTION
1					SHOCK ABSORBER PACKAGE
					Standard Duty
	8350 2512	2			Stamped 8952000950 or 52000950
	8350 2513	2			Stamped 8352001237 or 52001237
	8350 3449	2			Stamped 8952002307 or 52002307
	8350 3450	2			Stamped 8952002672 or 52002672
					Heavy Duty
	8350 2546	2			Stamped 8952002384 or 52002384
	8350 2514	2			Stamped 8952002787 or 52002787
	8350 3448	2			Stamped 8352003287 or 52003287
2	J448 8495	AR			WASHER
3	1150 0756	AR			NUT
4					SPRING ASSEMBLY, Rear ***
					Standard Duty
	5200 2312	2			Stamped RB
	5200 1240	2			Stamped RB
	5200 2351	2			Stamped RE
	5200 1824	2			Stamped RF
	5200 2350	2			Stamped RG
					Heavy Duty
	5200 1825	2			Stamped SD
5	5200 2888-9	2			PLATE
6	1150 2814	14			NUT
7					U-BOLT
	5200 2885	4			Standard Duty, 80mm
	5200 2886	4			Heavy Duty, 85mm
8	5200 0876	2			BUSHING
9	5200 0504	2			BUSHING
10	3420 1392	6			BOLT
11	5200 1828	2			SHACKLE
12					REINFORCEMENT
	5200 2892	2			Standard Duty, 80mm
	5200 2893	2			Heavy Duty, 85mm
13					BUMPER, Rear Axle Jounce
	5200 2382	2			74mm
	5200 2381	2			90mm
	5200 2393	2			104mm
	5200 2078	2			117mm
14	5200 2383	2			SPACER

MODEL CODES

16=Cherokee 2 Dr.(1981-83)
17=Cherokee 2 Dr.(1981-83)
73=Cherokee 2WD-2 Dr.(1984-86)
74=Cherokee 2WD-4 Dr.(1984-86)
18=Cherokee 4 Dr.(1981-83)
77=Cherokee 4WD-2 Dr.(1984-86)
78=Cherokee 4WD-4 Dr.(1984-86)
85=CJ-5 (1981-83)
86=CJ-6(1981)
87=CJ-7(1981-86)
88=CJ-8, Scrambler(1981-86)
64=Comanche 2WD-6 Ft. Box(1986)
66=Comanche 2WD-7 Ft. Box(1986)
63=Comanche 4WD-6 Ft. Box(1986)
65=Comanche 4WD-7 Ft. Box(1986)
15=Grand Wagoneer 4 Dr.(1984-86)
25=J-10 Truck 7 Ft. Box(1981-84)
26=J10 Truck 8 Ft. Box(1981-86)
27=J-20 Truck 8 Ft. Box(1981-86)
15=Wagoneer 4 Dr.(1981-83)
75=Wagoneer 4WD-4 Dr.(1984-86)

BODY
CJ=CJ-5, CJ-6, CJ-7, CJ-8, Scrambler(1981-86)
MJ=Comanche Pickup(1986)

STYLES
SJ=Wagoneer(1981-83), Grand Wagoneer(1984-86), Cherokee(1981-83), J-10, J-20(1981-86)
XJ=Wagoneer(1984-86), Cherokee(1984-86)

AR = Use as Required - = Non Illustrated Part P.A.R. = Paint as Required

« RETURN TO GROUP INDEX »

SUSPENSION, REAR WITH SHOCK ABSORBERS COMANCHE
Figure 17-500

81J17 500

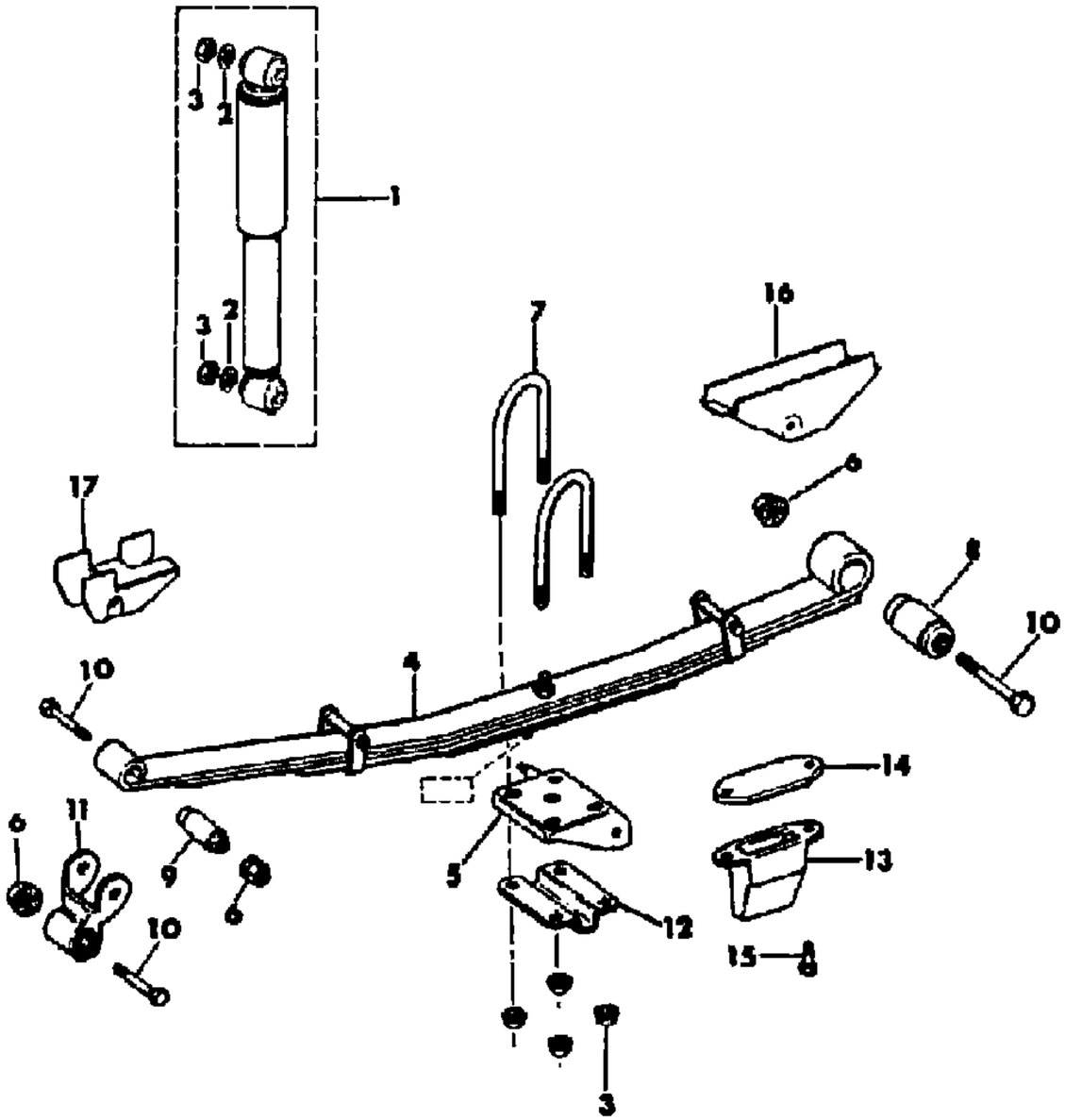

ITEM	PART NUMBER	QTY	BODY	MODEL	DESCRIPTION
15	J420 0089	4			SCREW
16					BRACKET
	5500 6826	2			With Seven Foot Pickup Box
	5500 9170	2			With Six Foot Pickup Box
17					BRACKET
					With Seven Foot Pickup Box
	5500 6824	1			Right
	5500 6825	1			Left
					With Six Foot pickup Box
	5500 6825	1			Right
	5500 6824	1			Left

Note: Shock Absorbers should be changed in pairs.

MODEL CODES

16=Cherokee 2 Dr.(1981-83)
17=Cherokee 2 Dr.(1981-83)
73=Cherokee 2WD-2 Dr.(1984-86)
74=Cherokee 2WD-4 Dr.(1984-86)
18=Cherokee 4 Dr.(1981-83)
77=Cherokee 4WD-2 Dr.(1984-86)
78=Cherokee 4WD-4 Dr.(1984-86)
85=CJ-5 (1981-83)
86=CJ-6(1981)
87=CJ-7(1981-86)
88=CJ-8, Scrambler(1981-86)
64=Comanche 2WD-6 Ft. Box(1986)
66=Comanche 2WD-7 Ft. Box(1986)
63=Comanche 4WD-6 Ft. Box(1986)
65=Comanche 4WD-7 Ft. Box(1986)
15=Grand Wagoneer 4 Dr.(1984-86)
25=J-10 Truck 7 Ft. Box(1981-84)
26=J10 Truck 8 Ft. Box(1981-86)
27=J-20 Truck 8 Ft. Box(1981-86)
15=Wagoneer 4 Dr.(1981-83)
75=Wagoneer 4WD-4 Dr.(1984-86)

BODY
CJ=CJ-5, CJ-6, CJ-7, CJ-8, Scrambler(1981-86)
MJ=Comanche Pickup(1986)

STYLES
SJ=Wagoneer(1981-83), Grand Wagoneer(1984-86), Cherokee(1981-83), J-10, J-20(1981-86)
XJ=Wagoneer(1984-86), Cherokee(1984-86)

AR = Use as Required - = Non Illustrated Part P.A.R. = Paint as Required

SUSPENSION, REAR WITH SHOCK ABSORBERS SJ CHEROKEE, SJ WAGONEER, J10, J20
Figure 17-600

81J17 600

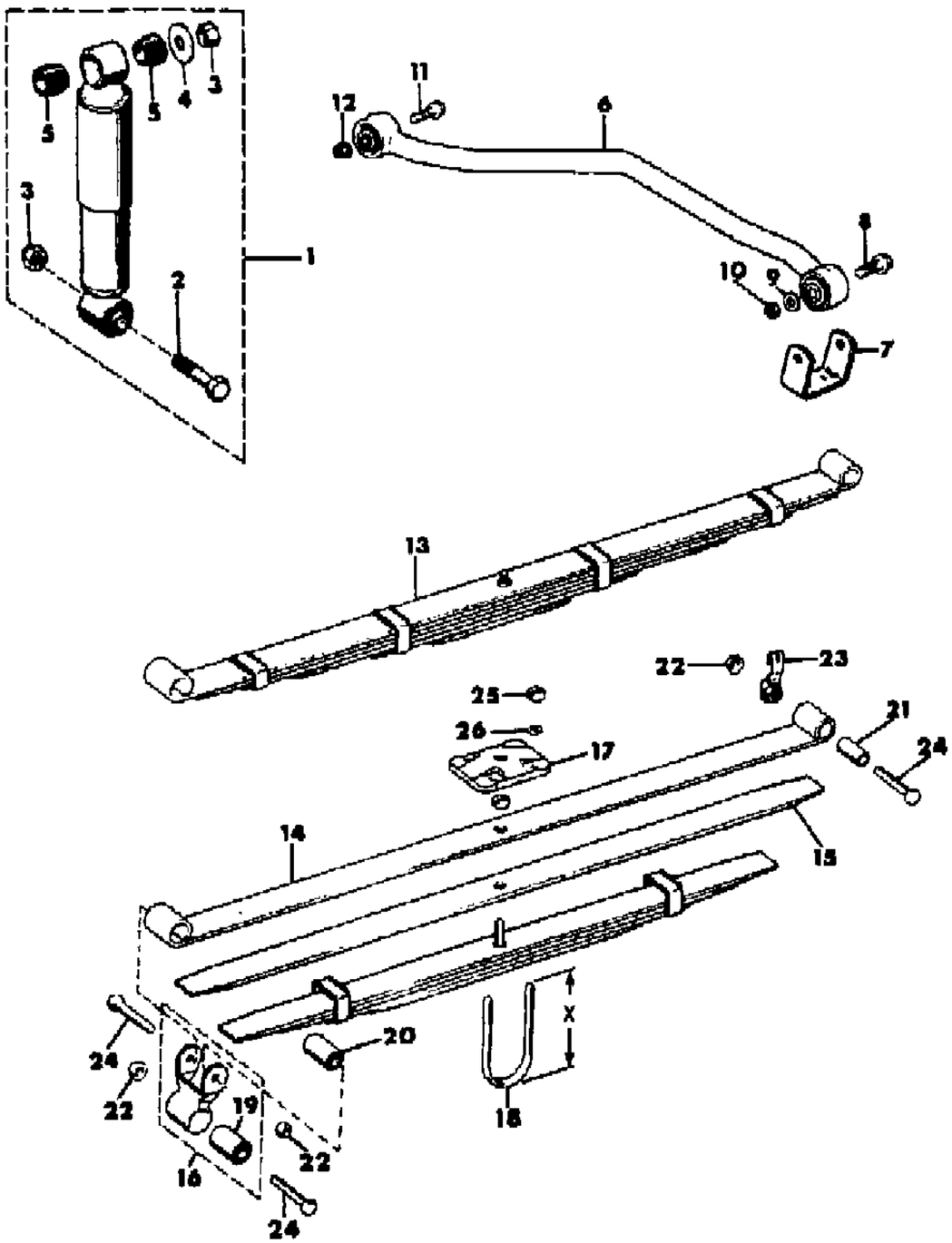

ITEM	PART NUMBER	QTY	BODY	MODEL	DESCRIPTION
1					SHOCK ABSORBER PACKAGE
					Soft Ride
	J813 3735	2		15,16,1	1981-86
					Standard Duty
	J813 3733	2		15,16,1	1981-84
	8350 1878	2		15	1985-86
	J813 3733	2		25,26,2	1981-86
					Front Dual Shock Option
	J813 3292	2		17,25	1981-86
	J813 3293	2		26,27	1981
	J813 4106	2		26	1982-86
					Heavy Duty
	J813 3292	2		15,16,1	1981-86
	J813 3292	2		25	1981-86
	J813 3293	2		26,27	1981
	J813 4106	2		26,27	1982-86
					GVW 8400
	J813 3293	2		27	1981
	J813 4106	2		27	1982-86
					Right Hand Drive, EXPORT
	J813 4754	2		15,16,1	1982-86
	J813 4630	2		27	1982-86
2	J018 1709	2			BOLT
3	J400 4311	4			NUT
4	J448 8495	2			WASHER
5	J063 7936	4			BUSHING
6	5200 1990	1			BAR, Track
7	5200 1989	1			SPACER
8	3420 1465	1			BOLT
9	J448 8495	1			WASHER
10	1150 2723	1			NUT
11	S150 4810	1			BOLT
12	1150 2812	1			NUT
13					SPRING ASSEMBLY, Rear ***
					Two Leaf
	J535 5415	2		26	1981-82: Heavy Duty
	J535 5415	2		27	1981-82: Light Duty
					Three Leaf
	J535 5414	2		27	1981-82: Heavy Duty, 6800-7600 GVW

MODEL CODES

16=Cherokee 2 Dr.(1981-83)
17=Cherokee 2 Dr.(1981-83)
73=Cherokee 2WD-2 Dr.(1984-86)
74=Cherokee 2WD-4 Dr.(1984-86)
18=Cherokee 4 Dr.(1981-83)
77=Cherokee 4WD-2 Dr.(1984-86)
78=Cherokee 4WD-4 Dr.(1984-86)
85=CJ-5 (1981-83)
86=CJ-6(1981)
87=CJ-7(1981-86)
88=CJ-8, Scrambler(1981-86)
64=Comanche 2WD-6 Ft. Box(1986)
66=Comanche 2WD-7 Ft. Box(1986)
63=Comanche 4WD-6 Ft. Box(1986)
65=Comanche 4WD-7 Ft. Box(1986)
15=Grand Wagoneer 4 Dr.(1984-86)
25=J-10 Truck 7 Ft. Box(1981-84)
26=J10 Truck 8 Ft. Box(1981-86)
27=J-20 Truck 8 Ft. Box(1981-86)
15=Wagoneer 4 Dr.(1981-83)
75=Wagoneer 4WD-4 Dr.(1984-86)

BODY
CJ=CJ-5, CJ-6, CJ-7, CJ-8, Scrambler(1981-86)
MJ=Comanche Pickup(1986)

STYLES
SJ=Wagoneer(1981-83), Grand Wagoneer(1984-86), Cherokee(1981-83), J-10, J-20(1981-86)
XJ=Wagoneer(1984-86), Cherokee(1984-86)

AR = Use as Required - = Non Illustrated Part P.A.R. = Paint as Required

SUSPENSION, REAR WITH SHOCK ABSORBERS SJ CHEROKEE, SJ WAGONEER, J10, J20
Figure 17-600

81J17 600

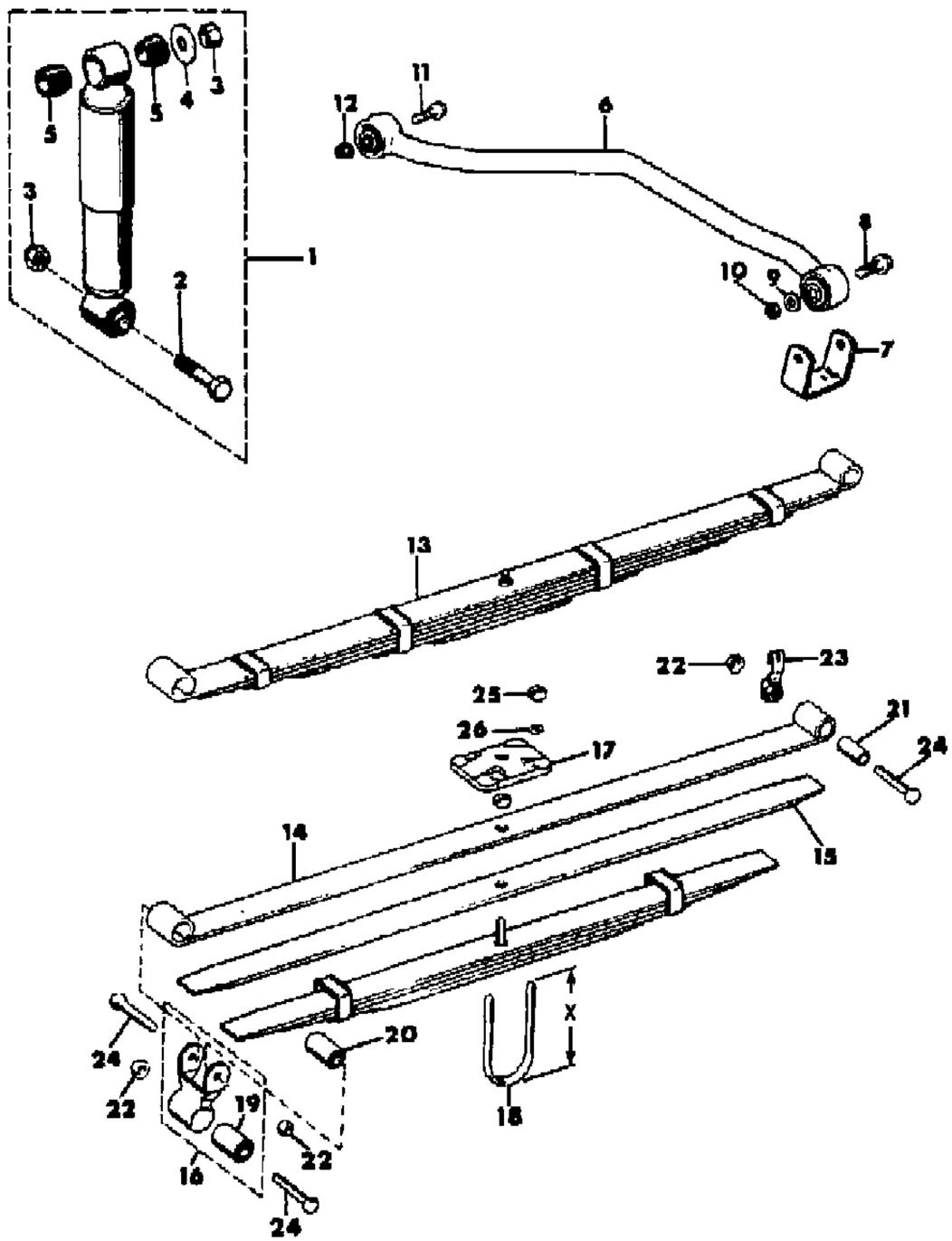

ITEM	PART NUMBER	QTY	BODY	MODEL	DESCRIPTION
	J535 5414	2		27	1981-82: 8400 GVW
					Four Leaf
	J535 5576	2		26	1981-86: Light Duty
					Five Leaf
	J536 2956	2		15,16,1	1981-86: Heavy Duty
	J536 2956	2		25	1981-86: Heavy Duty
	J536 2955	2		15,16,1	1981-86: Light Duty
	J536 2955	2		25	1981-86: Light Duty
					Six Leaf
	J536 4156	2		26,27	1982-86
					Eight Leaf
	J805 0620	2		27	1982-86: Heavy Duty, EXPORT, Right Hand Drive
					Nine Leaf
	J536 4155	2		27	1982-86
14					LEAF, Rear Spring, No. 1 ***
					Five Leaf
	J999 9251	2		15,16,1	1981-86: Heavy Duty
	J999 9251	2		25	1981-86: Heavy Duty
	J999 9252	2		15,16,1	1981-86: Light Duty
	J999 9252	2		25	1981-86: Light Duty
					Six Leaf
	J813 4424	2		26,27	1982-86
					Eight Leaf
	J813 4625	2		27	1982-86: Heavy Duty, EXPORT, Right Hand Drive
					Nine Leaf
	J813 4425	2		27	1982-86
15					LEAF, Rear Spring , No. 2 ***
					Eight Leaf
	J813 4626	2		27	1982-86: Heavy Duty, EXPORT, Right Hand Drive
					Nine Leaf
	J813 4426	2		27	1982-86
16					SHACKLE
	J535 2863	2		15,16,1	1981-86
	J535 2863	2		25,26	1981-86
	J535 2251	2		27	1981-86
17					PLATE
	J535 2087	2		15,16,1	1981-86
	J535 2087	2		25,26	1981-86
	J535 2091	2		27	1981-86

MODEL CODES

16=Cherokee 2 Dr.(1981-83)
17=Cherokee 2 Dr.(1981-83)
73=Cherokee 2WD-2 Dr.(1984-86)
74=Cherokee 2WD-4 Dr.(1984-86)
18=Cherokee 4 Dr.(1981-83)
77=Cherokee 4WD-2 Dr.(1984-86)
78=Cherokee 4WD-4 Dr.(1984-86)
85=CJ-5 (1981-83)
86=CJ-6(1981)
87=CJ-7(1981-86)
88=CJ-8, Scrambler(1981-86)
64=Comanche 2WD-6 Ft. Box(1986)
66=Comanche 2WD-7 Ft. Box(1986)
63=Comanche 4WD-6 Ft. Box(1986)
65=Comanche 4WD-7 Ft. Box(1986)
15=Grand Wagoneer 4 Dr.(1984-86)
25=J-10 Truck 7 Ft. Box(1981-84)
26=J10 Truck 8 Ft. Box(1981-86)
27=J-20 Truck 8 Ft. Box(1981-86)
15=Wagoneer 4 Dr.(1981-83)
75=Wagoneer 4WD-4 Dr.(1984-86)

BODY
CJ=CJ-5, CJ-6, CJ-7, CJ-8, Scrambler(1981-86)
MJ=Comanche Pickup(1986)

STYLES
SJ=Wagoneer(1981-83), Grand Wagoneer(1984-86), Cherokee(1981-83), J-10, J-20(1981-86)
XJ=Wagoneer(1984-86), Cherokee(1984-86)

AR = Use as Required - = Non Illustrated Part P.A.R. = Paint as Required

SUSPENSION, REAR WITH SHOCK ABSORBERS SJ CHEROKEE, SJ WAGONEER, J10, J20
Figure 17-600

81J17 600

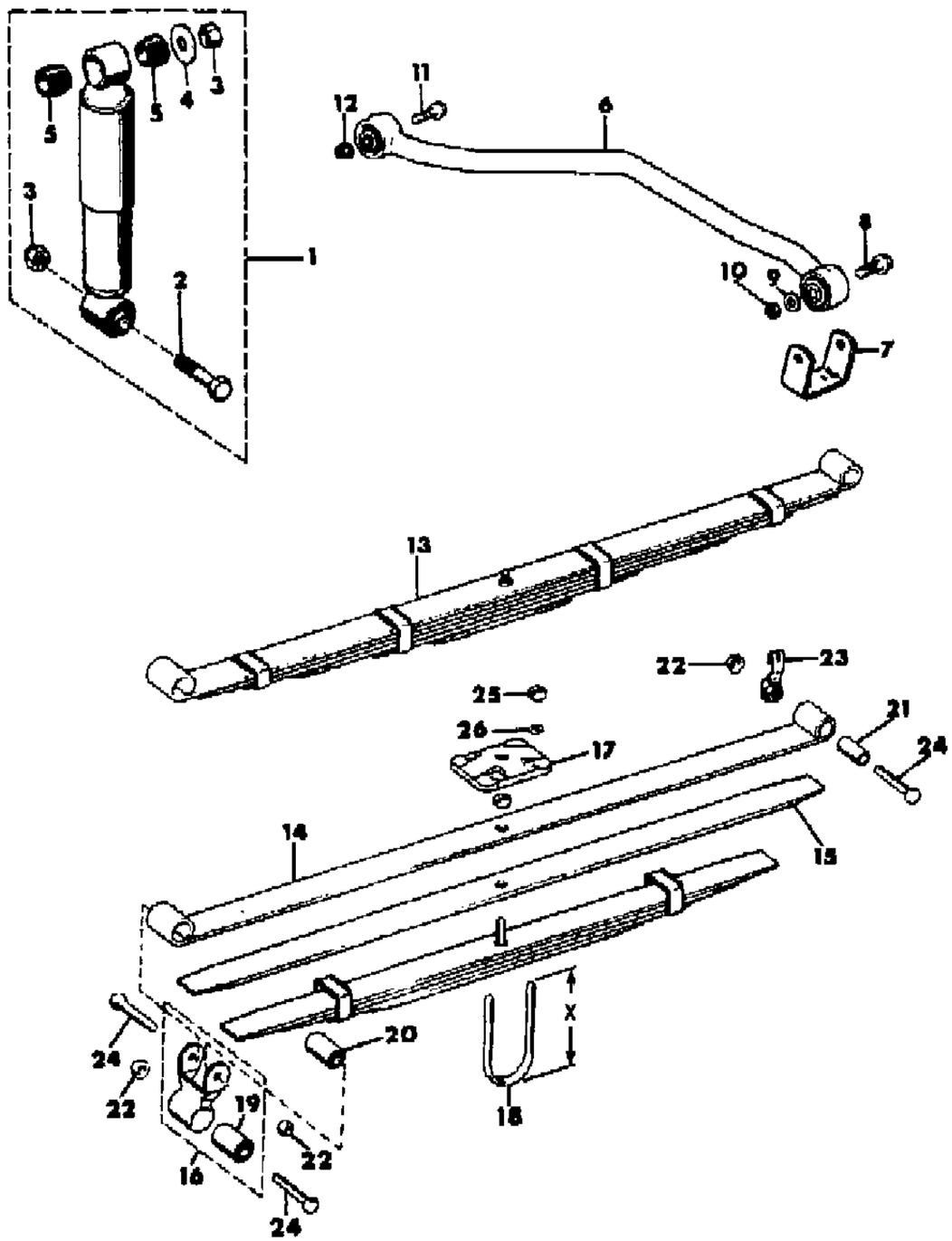

ITEM	PART NUMBER	QTY	BODY	MODEL	DESCRIPTION
18					U-BOLT
					A B
	J812 9475	AR		15,16,1	1981-86: 3.40 5.50
	J812 9475	AR		25,26	1981-86: 3.40 5.50
	J535 2088	AR		26,27	1981-86: 3.75 5.50
	J535 2090	AR		27	1981-86: 3.75 5.00
	J813 0371	AR		25,26,2	1981-86: 3.75 6.00
	J536 4244	AR		25,26,2	1982-86: 3.75 7.00
19	J535 2079	2			BUSHING
20	J094 4870	2			BUSHING
21					BUSHING
	J535 5369	2			1981-86: 1-1/2" OD
	J535 8985	2		15,16,1	1981-86: 2" OD
	J535 8985	2		25	1981-86: 2" OD
22	J400 5198	6			NUT
23	J400 6631	1			NUT, Left
24	J400 4120	6			BOLT
25	J942 0350	8			NUT
26	J400 4806	8			WASHER, Lock

Note: Shock Absorbers should be changed in pairs.

MODEL CODES

16=Cherokee 2 Dr.(1981-83)
17=Cherokee 2 Dr.(1981-83)
73=Cherokee 2WD-2 Dr.(1984-86)
74=Cherokee 2WD-4 Dr.(1984-86)
18=Cherokee 4 Dr.(1981-83)
77=Cherokee 4WD-2 Dr.(1984-86)
78=Cherokee 4WD-4 Dr.(1984-86)
85=CJ-5 (1981-83)
86=CJ-6(1981)
87=CJ-7(1981-86)
88=CJ-8, Scrambler(1981-86)
64=Comanche 2WD-6 Ft. Box(1986)
66=Comanche 2WD-7 Ft. Box(1986)
63=Comanche 4WD-6 Ft. Box(1986)
65=Comanche 4WD-7 Ft. Box(1986)
15=Grand Wagoneer 4 Dr.(1984-86)
25=J-10 Truck 7 Ft. Box(1981-84)
26=J10 Truck 8 Ft. Box(1981-86)
27=J-20 Truck 8 Ft. Box(1981-86)
15=Wagoneer 4 Dr.(1981-83)
75=Wagoneer 4WD-4 Dr.(1984-86)

BODY
CJ=CJ-5, CJ-6, CJ-7, CJ-8, Scrambler(1981-86)
MJ=Comanche Pickup(1986)

STYLES
SJ=Wagoneer(1981-83), Grand Wagoneer(1984-86), Cherokee(1981-83), J-10, J-20(1981-86)
XJ=Wagoneer(1984-86), Cherokee(1984-86)

AR = Use as Required - = Non Illustrated Part P.A.R. = Paint as Required

SHOCK ABSORBER SYSTEM, REAR WITH AIR ADJUSTABLE SHOCK ABSORBERS SJ CHEROKEE, SJ WAGONEER, J10
Figure 17-700

81J17 700

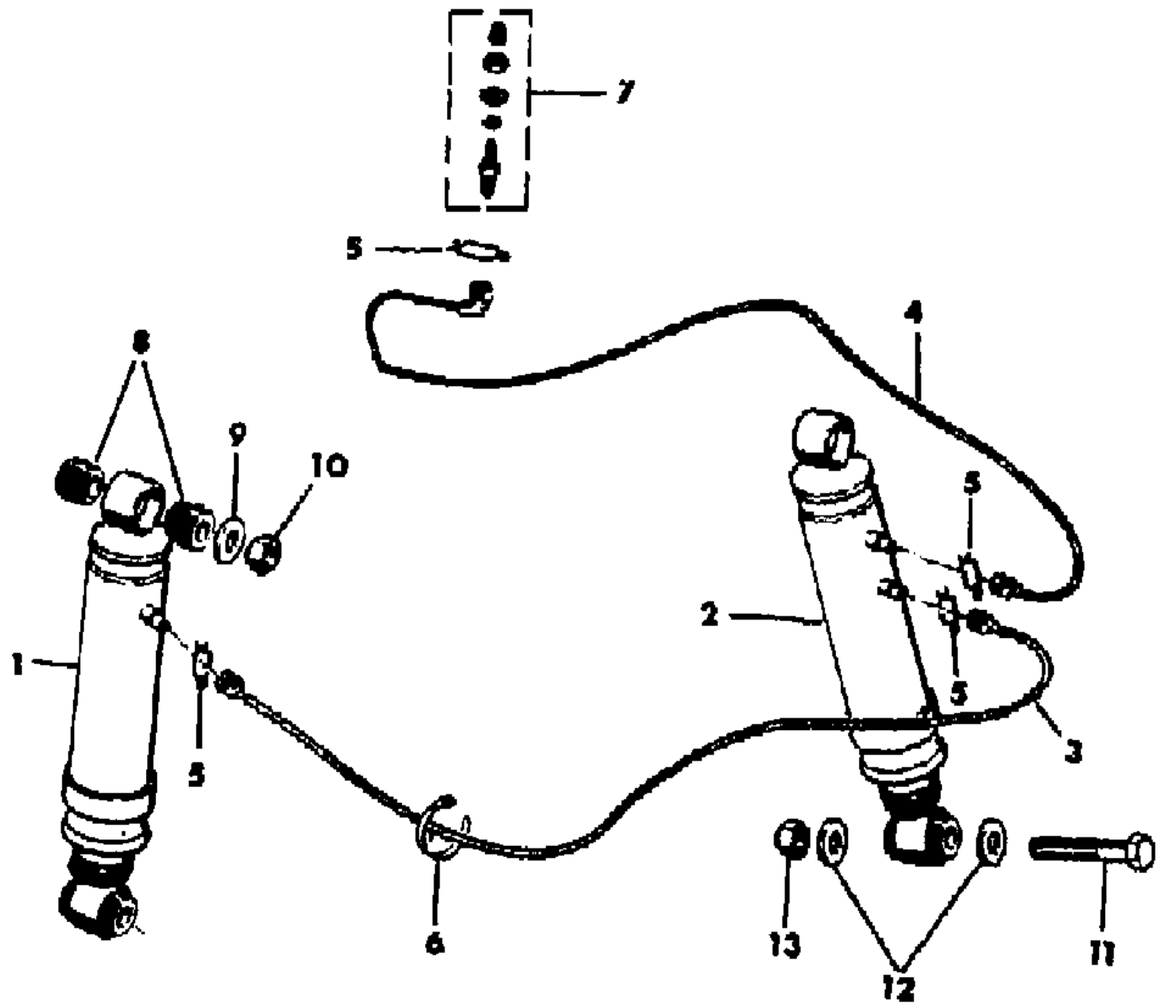

ITEM	PART NUMBER	QTY	BODY	MODEL	DESCRIPTION
1	J536 3313	1			SHOCK ASSEMBLY, Air ***
2	J536 3314	1			SHOCK ASSEMBLY, Air ***
3					TUBE ASSEMBLY, Shock to Shock ***
	J325 1164	1		15,16,1	
	J324 0408	1		25	
	J324 1513	1		26	
4	J325 1165	1			TUBE ASSEMBLY, Shock to Valve ***
5	J813 1724	4			RETAINER, Tube
6	J310 8634	5			CLIP
7	J813 3163	1			VALVE ASSEMBLY ***
8	J063 7936	4			BUSHING
9	J448 8495	2			WASHER
10	J400 4311	2			NUT
11	J018 1709	2			BOLT
12	J448 8495	4			WASHER
13	J400 4311	2			NUT

MODEL CODES

16=Cherokee 2 Dr.(1981-83)
17=Cherokee 2 Dr.(1981-83)
73=Cherokee 2WD-2 Dr.(1984-86)
74=Cherokee 2WD-4 Dr.(1984-86)
18=Cherokee 4 Dr.(1981-83)
77=Cherokee 4WD-2 Dr.(1984-86)
78=Cherokee 4WD-4 Dr.(1984-86)
85=CJ-5 (1981-83)
86=CJ-6(1981)
87=CJ-7(1981-86)
88=CJ-8, Scrambler(1981-86)
64=Comanche 2WD-6 Ft. Box(1986)
66=Comanche 2WD-7 Ft. Box(1986)
63=Comanche 4WD-6 Ft. Box(1986)
65=Comanche 4WD-7 Ft. Box(1986)
15=Grand Wagoneer 4 Dr.(1984-86)
25=J-10 Truck 7 Ft. Box(1981-84)
26=J10 Truck 8 Ft. Box(1981-86)
27=J-20 Truck 8 Ft. Box(1981-86)
15=Wagoneer 4 Dr.(1981-83)
75=Wagoneer 4WD-4 Dr.(1984-86)

BODY
CJ=CJ-5, CJ-6, CJ-7, CJ-8, Scrambler(1981-86)
MJ=Comanche Pickup(1986)

STYLES
SJ=Wagoneer(1981-83), Grand Wagoneer(1984-86), Cherokee(1981-83), J-10, J-20(1981-86)
XJ=Wagoneer(1984-86), Cherokee(1984-86)

AR = Use as Required - = Non Illustrated Part P.A.R. = Paint as Required

« RETURN TO GROUP INDEX

ILLUSTRATION NOT AVAILABLE AT TIME OF PUBLICATION

GROUP 19 - STEERING

ILLUSTRATION TITLE	GROUP-FIG. NO.
WHEEL, STEERING STANDARD WHEEL CJ-5,6,7,8, SCRAMBLER	Fig. 19-100
WHEEL, STEERING SPORT WHEELS CJ-5,6,7,8, SCRAMBLER	Fig. 19-200
WHEEL, STEERING TWO SPOKE XJ CHEROKEE, XJ WAGONEER, COMANCHE	Fig. 19-300
WHEEL, STEERING THREE SPOKE SPORT XJ CHEROKEE, XJ WAGONEER, COMANCHE	Fig. 19-400
WHEEL, STEERING 1986 TWO SPOKE SJ WAGONEER, J10, J20	Fig. 19-500
WHEEL, STEERING THREE SPOKE STANDARD SJ CHEROKEE, SJ WAGONEER, J10, J20	Fig. 19-600
WHEEL, STEERING SPORT WHEELS SJ CHEROKEE, SJ WAGONEER, J10, J20	Fig. 19-700
WHEEL, STEERING FOUR SPOKE SJ CHEROKEE, SJ WAGONEER, J10, J20	Fig. 19-800
COLUMN ASSEMBLY, STEERING CJ-5,6,7,8, SCRAMBLER	Fig. 19-900
HOUSING, STEERING COLUMN UPPER WITH FLOOR SHIFT, WITHOUT TILT WHEEL CJ-5,6,7,8, SCRAMBLER	Fig. 19-1000
HOUSING, STEERING COLUMN LOWER WITH FLOOR SHIFT, WITHOUT TILT WHEEL CJ-5,6,7,8, SCRAMBLER	Fig. 19-1100
HOUSING, STEERING COLUMN UPPER WITH FLOOR GEAR SHIFT, WITH TILT WHEEL CJ-5,6,7,8, SCRAMBLER	Fig. 19-1200
HOUSING, STEERING COLUMN LOWER WITH FLOOR SHIFT, WITH TILT WHEEL CJ-5,6,7,8, SCRAMBLER	Fig. 19-1300
HOUSING, STEERING COLUMN, UPPER WITH COLUMN SHIFT, WITHOUT TILT WHEEL CJ-5,6,7,8, SCRAMBLER	Fig. 19-1400
HOUSING, STEERING COLUMN LOWER WITH COLUMN SHIFT, WITHOUT TILT WHEEL CJ-5,6,7,8, SCRAMBLER	Fig. 19-1500
HOUSING, STEERING COLUMN UPPER WITH COLUMN SHIFT, WITH TILT WHEEL CJ-5,6,7,8, SCRAMBLER	Fig. 19-1600
HOUSING, STEERING COLUMN LOWER WITH COLUMN SHIFT, WITH TILT WHEEL CJ-5,6,7,8, SCRAMBLER	Fig. 19-1700
COLUMN ASSEMBLY, STEERING WITH FLOOR MOUNTED GEAR SHIFT XJ CHEROKEE, XJ WAGONEER, COMANCHE	Fig. 19-1800
HOUSING, STEERING COLUMN UPPER WITH FLOOR GEAR SHIFT, WITHOUT TILT WHEEL XJ CHEROKEE, XJ WAGONEER, COMANCHE	Fig. 19-1900
HOUSING, STEERING COLUMN LOWER WITH FLOOR GEAR SHIFT, WITHOUT TILT WHEEL XJ CHEROKEE, XJ WAGONEER, COMANCHE	Fig. 19-2000
HOUSING, STEERING COLUMN UPPER WITH FLOOR SHIFT, WITH TILT WHEEL XJ CHEROKEE, XJ WAGONEER, COMANCHE	Fig. 19-2100
HOUSING, STEERING COLUMN LOWER WITH FLOOR GEAR SHIFT, WITH TILT WHEEL XJ CHEROKEE, XJ WAGONEER, COMANCHE	Fig. 19-2200
COLUMN ASSEMBLY, STEERING WITH COLUMN GEAR SHIFT COMANCHE	Fig. 19-2300
HOUSING, STEERING COLUMN UPPER WITH COLUMN GEAR SHIFT, WITHOUT TILT WHEEL COMANCHE	Fig. 19-2400

ILLUSTRATION TITLE	GROUP-FIG. NO.
SUSPENSION, REAR (Continued)	
HOUSING, STEERING COLUMN LOWER WITH COLUMN GEAR SHIFT, WITHOUT TILT WHEEL COMANCHE	Fig. 19-2500
HOUSING, STEERING COLUMN UPPER WITH COLUMN GEAR SHIFT, WITH TILT WHEEL COMANCHE	Fig. 19-2600
HOUSING, STEERING COLUMN LOWER WITH COLUMN GEAR SHIFT, WITH TILT WHEEL COMANCHE	Fig. 19-2700
COLUMN ASSEMBLY, STEERING AND MOUNTING BRACKETS SJ CHEROKEE, SJ WAGONEER, J10, J20	Fig. 19-2800
HOUSING, STEERING COLUMN UPPER WITH FLOOR GEAR SHIFT, WITHOUT TILT WHEEL SJ CHEROKEE, SJ WAGONEER, J10, J20	Fig. 19-2900
HOUSING, STEERING COLUMN LOWER WITH FLOOR GEAR SHIFT, WITHOUT TILT WHEEL SJ CHEROKEE, SJ WAGONEER, J10, J20	Fig. 19-3000
HOUSING, STEERING COLUMN UPPER WITH FLOOR GEAR SHIFT, WITH TILT WHEEL 1981-85 SJ CHEROKEE, SJ WAGONEER, J10, J20	Fig. 19-3100
HOUSING, STEERING COLUMN LOWER WITH FLOOR SHIFT, WITH TILT WHEEL 1981-85 SJ CHEROKEE, SJ WAGONEER, J10, J20	Fig. 19-3200
HOUSING, STEERING COLUMN UPPER WITH FLOOR SHIFT, WITH TILT WHEEL 1986 SJ WAGONEER, J10, J20	Fig. 19-3300
HOUSING, STEERING COLUMN LOWER WITH FLOOR GEAR SHIFT, WITH TILT WHEEL 1986 SJ WAGONEER, J10, J20	Fig. 19-3400
HOUSING, STEERING COLUMN, UPPER WITH COLUMN SHIFT, WITHOUT TILT WHEEL SJ CHEROKEE, SJ WAGONEER, J10, J20	Fig. 19-3500
HOUSING, STEERING COLUMN LOWER WITH COLUMN SHIFT, WITHOUT TILT WHEEL SJ CHEROKEE, SJ WAGONEER, J10, J20	Fig. 19-3600
HOUSING, STEERING COLUMN UPPER WITH COLUMN SHIFT, WITH TILT WHEEL 1981-85 SJ CHEROKEE, SJ WAGONEER, J10, J20	Fig. 19-3700
HOUSING, STEERING COLUMN LOWER WITH COLUMN SHIFT, WITH TILT WHEEL 1981-85 SJ CHEROKEE, SJ WAGONEER, J10, J20	Fig. 19-3800
HOUSING, STEERING COLUMN UPPER WITH COLUMN SHIFT, WITH TILT WHEEL 1986 SJ WAGONEER, J10, J20	Fig. 19-3900
HOUSING, STEERING COLUMN LOWER WITH COLUMN GEAR SHIFT, WITH TILT WHEEL 1986 SJ WAGONEER, J10, J20	Fig. 19-4000
GEAR, STEERING WITHOUT POWER STEERING CJ-5,6,7,8, SCRAMBLER	Fig. 19-4100
GEAR, STEERING WITH POWER STEERING CJ-5,6,7,8, SCRAMBLER	Fig. 19-4200
GEAR MOUNTING, STEERING CJ-5,6,7,8, SCRAMBLER	Fig. 19-4300
GEAR, STEERING WITHOUT POWER STEERING XJ CHEROKEE, XJ WAGONEER, COMANCHE	Fig. 19-4400
GEAR, STEERING WITH POWER STEERING XJ CHEROKEE, XJ WAGONEER, COMANCHE	Fig. 19-4500
GEAR, STEERING WITHOUT POWER STEERING SJ CHEROKEE, SJ WAGONEER, J10, J20	Fig. 19-4600
GEAR, STEERING WITH POWER STEERING SJ CHEROKEE, SJ WAGONEER, J10, J20	Fig. 19-4700
LINKAGE, STEERING CJ-5,6,7,8, SCRAMBLER	Fig. 19-4800

GROUP 19 - STEERING

ILLUSTRATION TITLE	GROUP-FIG. NO.
SUSPENSION, REAR (Continued)	
LINKAGE, STEERING CJ-5,6,7,8, SCRAMBLER	Fig. 19-4800
DAMPER, STEERING ORIGINAL EQUIPMENT CJ-5,6,7,8, SCRAMBLER	Fig. 19-4900
DAMPER, STEERING SPECIAL EQUIPMENT CJ-5,6,7,8, SCRAMBLER	Fig. 19-5000
LINKAGE AND DAMPER, STEERING XJ CHEROKEE, XJ WAGONEER, COMANCHE	Fig. 19-5100
LINKAGE AND DAMPER STEERING SJ CHEROKEE, SJ WAGONEER, J10, J20	Fig. 19-5200
PUMP, POWER STEERING CJ-5,6,7,8, SCRAMBLER	Fig. 19-5300
PUMP, POWER STEERING FOUR OR SIX CYLINDER GAS ENGINE XJ CHEROKEE, XJ WAGONEER, COMANCHE	Fig. 19-5400
PUMP, POWER STEERING DIESEL ENGINE XJ CHEROKEE, XJ WAGONEER, COMANCHE	Fig. 19-5500
PUMP, POWER STEERING SJ CHEROKEE, SJ WAGONEER, J10, J20	Fig. 19-5600
PUMP MOUNTING, POWER STEERING GM FOUR CYLINDER CJ-5,6,7,8, SCRAMBLER	Fig. 19-5700
PUMP MOUNTING, POWER STEERING AMC FOUR OR SIX CYLINDER AND DIESEL CJ-5,6,7,8, SCRAMBLER	Fig. 19-5800
PUMP MOUNTING, POWER STEERING EIGHT CYLINDER CJ-5,6,7,8, SCRAMBLER	Fig. 19-5900
PUMP MOUNTING, POWER STEERING FOUR CYLINDER XJ CHEROKEE, XJ WAGONEER, COMANCHE	Fig. 19-6000
PUMP MOUNTING, POWER STEERING SIX CYLINDER XJ CHEROKEE, XJ WAGONEER, COMANCHE	Fig. 19-6100
PUMP MOUNTING, POWER STEERING DIESEL XJ CHEROKEE, XJ WAGONEER, COMANCHE	Fig. 19-6200
PUMP MOUNTING, POWER STEERING SIX CYLINDER SJ CHEROKEE, SJ WAGONEER, J10, J20	Fig. 19-6300
PUMP MOUNTING, POWER STEERING EIGHT CYLINDER SJ CHEROKEE, SJ WAGONEER, J10, J20	Fig. 19-6400

WHEEL, STEERING STANDARD WHEEL CJ-5,6,7,8, SCRAMBLER
Figure 19-100

81J19 100

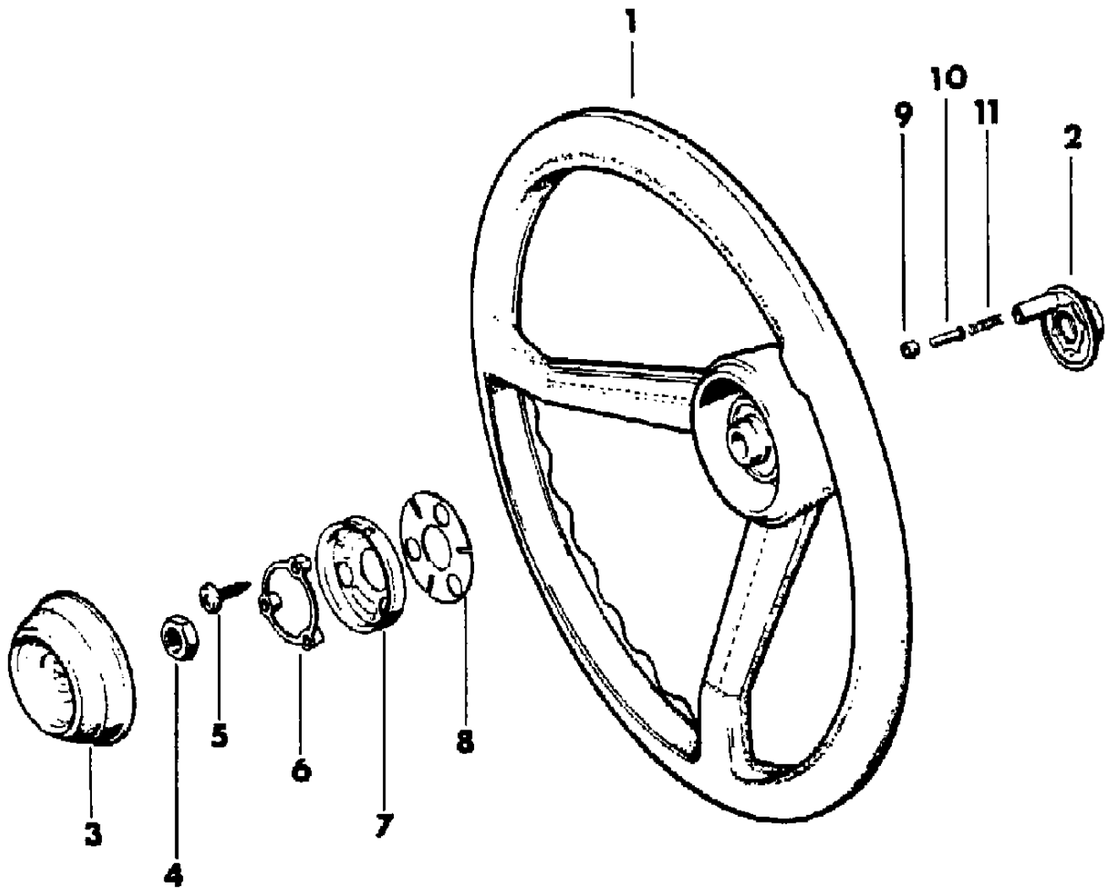

ITEM	PART NUMBER	QTY	BODY	MODEL	DESCRIPTION
1					WHEEL, Steering
	J536 0060	1			1981-86: Black
	J536 2776	1			1981: Blue
	J536 3643	1			1982-83: Blue
	J536 4987	1			1984-85: Dark Almond
	J536 2777	1			1981-83: Medium Brown
	J536 4988	1			1984-85: Nutmeg
	J536 5123	1			1985: Honey
2					CAM, Cancelling
	J448 7816	1			With Tilt Wheel
	J448 7711	1			Without Tilt Wheel
3					BUTTON, Steering Wheel
	J536 2568	1			1981-86: Black
	J536 2569	1			1981: Blue
	J536 3678	1			1982-83: Blue
	J536 4996	1			1984-85: Dark Almond
	J536 2571	1			1981-83: Medium Brown
	J536 4997	1			1984: Nutmeg
	J536 5124	1			1985: Honey
4	J420 0414	1			NUT
5	J400 4167	3			SCREW
6	J318 6964	1			BUSHING
7	J324 2217	1			RECEIVER
8	J318 6965	1			SPRING
9	J318 7257	1			RETAINER
10	J318 7249	1			PIN
11	J318 7255	1			SPRING

MODEL CODES
16=Cherokee 2 Dr.(1981-83)
17=Cherokee 2 Dr.(1981-83)
73=Cherokee 2WD-2 Dr.(1984-86)
74=Cherokee 2WD-4 Dr.(1984-86)
18=Cherokee 4 Dr.(1981-83)
77=Cherokee 4WD-2 Dr.(1984-86)
78=Cherokee 4WD-4 Dr.(1984-86)
85=CJ-5 (1981-83)
86=CJ-6(1981)
87=CJ-7(1981-86)
88=CJ-8, Scrambler(1981-86)
64=Comanche 2WD-6 Ft. Box(1986)
66=Comanche 2WD-7 Ft. Box(1986)
63=Comanche 4WD-6 Ft. Box(1986)
65=Comanche 4WD-7 Ft. Box(1986)
15=Grand Wagoneer 4 Dr.(1984-86)
25=J-10 Truck 7 Ft. Box(1981-84)
26=J10 Truck 8 Ft. Box(1981-86)
27=J-20 Truck 8 Ft. Box(1981-86)
15=Wagoneer 4 Dr.(1981-83)
75=Wagoneer 4WD-4 Dr.(1984-86)

BODY
CJ=CJ-5, CJ-6, CJ-7, CJ-8, Scrambler(1981-86)
MJ=Comanche Pickup(1986)

STYLES
SJ=Wagoneer(1981-83), Grand Wagoneer(1984-86), Cherokee(1981-83), J-10, J-20(1981-86)
XJ=Wagoneer(1984-86), Cherokee(1984-86)

AR = Use as Required - = Non Illustrated Part P.A.R. = Paint as Required

« RETURN TO GROUP INDEX

WHEEL, STEERING SPORT WHEELS CJ-5,6,7,8, SCRAMBLER
Figure 19-200

81J19 200

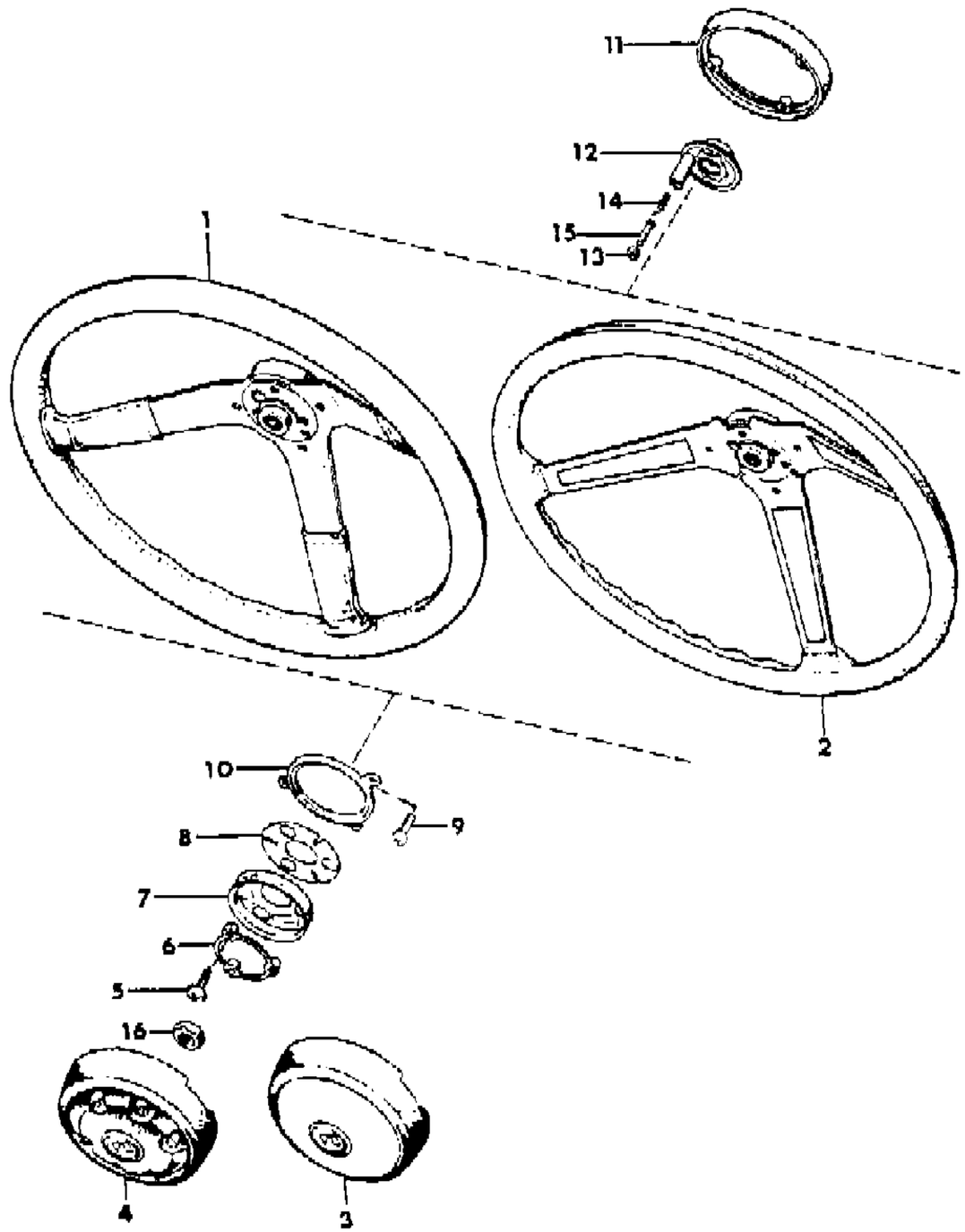

ITEM	PART NUMBER	QTY	BODY	MODEL	DESCRIPTION
1					WHEEL, Steering, Leather Wrap
	J813 3026	1			1981-86: Black
	J813 3249	1			1981: Blue
	J813 3814	1			1982-83: Blue
	8351 0066	1			1984-85: Dark Almond
	J813 3246	1			1981-83: Medium Brown
	J813 3247	1			1981-85: Nutmeg
	8351 0067	1			1985: Garnet
	8351 0068	1			1985: Honey
	8350 2195	1			1986: Honey
2					WHEEL, Steering, Soft Feel
	J813 3016	1			1981-86: Black
	J813 3017	1			1981: Blue
	J813 3813	1			1982-83: Blue
	8351 0063	1			1984-85: Dark Almond
	J813 3020	1			1981-83: Medium Brown
	J813 3019	1			1981-85: Nutmeg
	8351 0065	1			1985: Honey
	8350 2199	1			1986: Honey
3					BUTTON, Steering Wheel
	J536 2573	1			1981-86: Black
	J536 2574	1			1981: Blue
	J536 3677	1			1982-83: Blue
	J536 4993	1			1984-85: Dark Almond
	J536 2576	1			1981-83: Medium Brown
	J536 2575	1			1981-85: Nutmeg
	J536 5129	1			1985: Garnet
	J536 5126	1			1985: Honey
	5200 1629	1			1986: Honey
4					BUTTON, Steering Wheel
	J536 2582	1			1981-86: Black
	J536 2583	1			1981: Blue
	J536 3644	1			1982-83: Blue
	J536 4992	1			1984-85: Dark Almond
	J536 2585	1			1981-83: Medium Brown
	J536 2584	1			1981-85: Nutmeg
	J536 5127	1			1985: Honey
5	J400 4167	3			SCREW
6	J318 6964	1			BUSHING

MODEL CODES

16=Cherokee 2 Dr.(1981-83)
17=Cherokee 2 Dr.(1981-83)
73=Cherokee 2WD-2 Dr.(1984-86)
74=Cherokee 2WD-4 Dr.(1984-86)
18=Cherokee 4 Dr.(1981-83)
77=Cherokee 4WD-2 Dr.(1984-86)
78=Cherokee 4WD-4 Dr.(1984-86)
85=CJ-5 (1981-83)
86=CJ-6(1981)
87=CJ-7(1981-86)
88=CJ-8, Scrambler(1981-86)
64=Comanche 2WD-6 Ft. Box(1986)
66=Comanche 2WD-7 Ft. Box(1986)
63=Comanche 4WD-6 Ft. Box(1986)
65=Comanche 4WD-7 Ft. Box(1986)
15=Grand Wagoneer 4 Dr.(1984-86)
25=J-10 Truck 7 Ft. Box(1981-84)
26=J10 Truck 8 Ft. Box(1981-86)
27=J-20 Truck 8 Ft. Box(1981-86)
15=Wagoneer 4 Dr.(1981-83)
75=Wagoneer 4WD-4 Dr.(1984-86)

BODY
CJ=CJ-5, CJ-6, CJ-7, CJ-8, Scrambler(1981-86)
MJ=Comanche Pickup(1986)

STYLES
SJ=Wagoneer(1981-83), Grand Wagoneer(1984-86), Cherokee(1981-83), J-10, J-20(1981-86)
XJ=Wagoneer(1984-86), Cherokee(1984-86)

AR = Use as Required - = Non Illustrated Part P.A.R. = Paint as Required

WHEEL, STEERING SPORT WHEELS CJ-5,6,7,8, SCRAMBLER
Figure 19-200

81J19 200

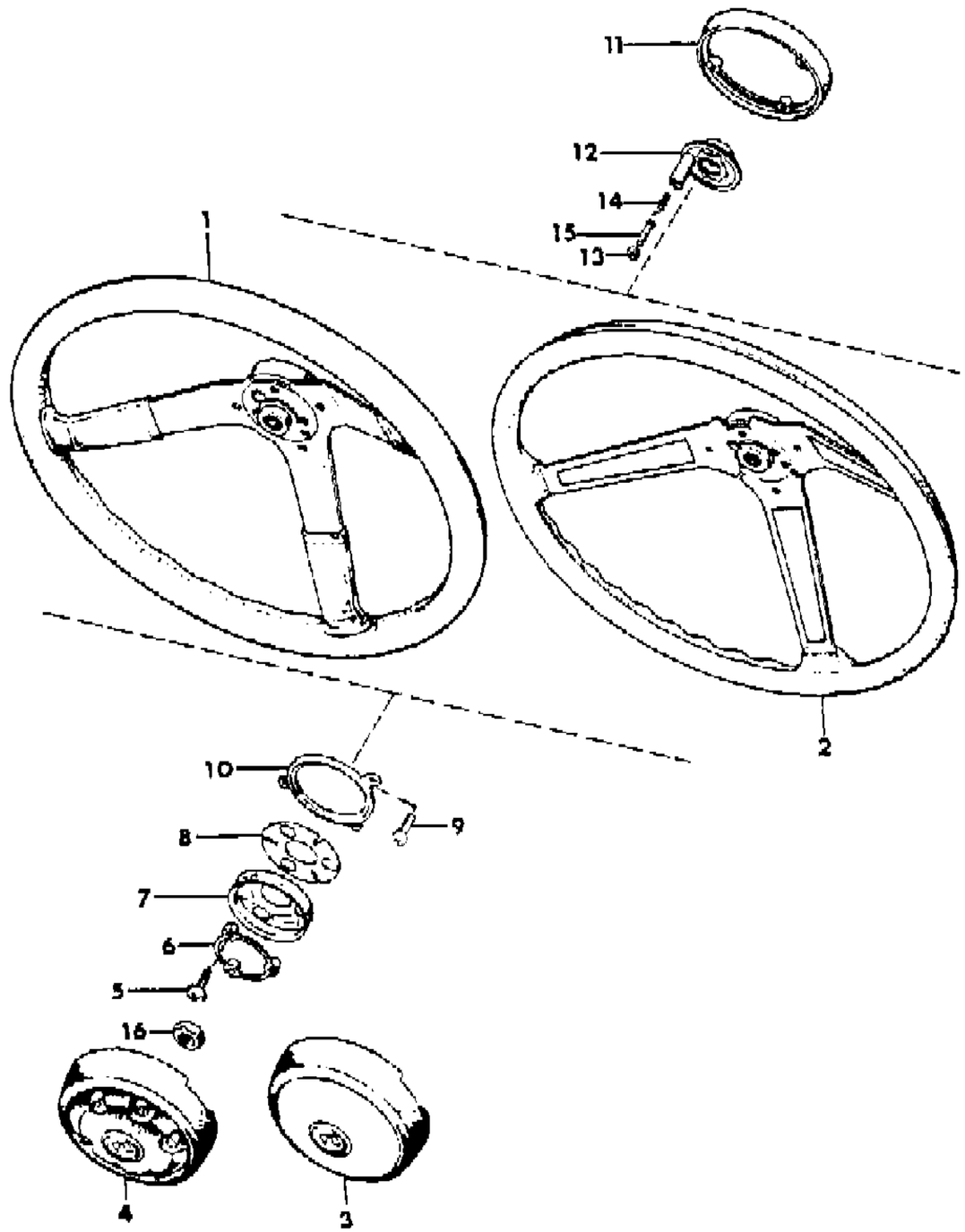

ITEM	PART NUMBER	QTY	BODY	MODEL	DESCRIPTION
7	J324 2217	1			RECEIVER
8	J318 6965	1			SPRING
9	J812 2359	3			SCREW
10	J321 3915	1			INSULATOR
11	J321 8276	1			EXTENSION, P.A.R.
12					CAM, Cancelling
	J448 7816	1			With Tilt Wheel
	J448 7711	1			Without Tilt Wheel
13	J318 7257	1			RETAINER
14	J318 7255	1			SPRING
15	J318 7249	1			PIN
16	J420 0414	1			NUT

MODEL CODES

16=Cherokee 2 Dr.(1981-83)
17=Cherokee 2 Dr.(1981-83)
73=Cherokee 2WD-2 Dr.(1984-86)
74=Cherokee 2WD-4 Dr.(1984-86)
18=Cherokee 4 Dr.(1981-83)
77=Cherokee 4WD-2 Dr.(1984-86)
78=Cherokee 4WD-4 Dr.(1984-86)
85=CJ-5 (1981-83)
86=CJ-6(1981)
87=CJ-7(1981-86)
88=CJ-8, Scrambler(1981-86)
64=Comanche 2WD-6 Ft. Box(1986)
66=Comanche 2WD-7 Ft. Box(1986)
63=Comanche 4WD-6 Ft. Box(1986)
65=Comanche 4WD-7 Ft. Box(1986)
15=Grand Wagoneer 4 Dr.(1984-86)
25=J-10 Truck 7 Ft. Box(1981-84)
26=J10 Truck 8 Ft. Box(1981-86)
27=J-20 Truck 8 Ft. Box(1981-86)
15=Wagoneer 4 Dr.(1981-83)
75=Wagoneer 4WD-4 Dr.(1984-86)

BODY
CJ=CJ-5, CJ-6, CJ-7, CJ-8, Scrambler(1981-86)
MJ=Comanche Pickup(1986)

STYLES
SJ=Wagoneer(1981-83), Grand Wagoneer(1984-86), Cherokee(1981-83), J-10, J-20(1981-86)
XJ=Wagoneer(1984-86), Cherokee(1984-86)

AR = Use as Required - = Non Illustrated Part P.A.R. = Paint as Required

WHEEL, STEERING TWO SPOKE XJ CHEROKEE, XJ WAGONEER, COMANCHE
Figure 19-300

81J19 300

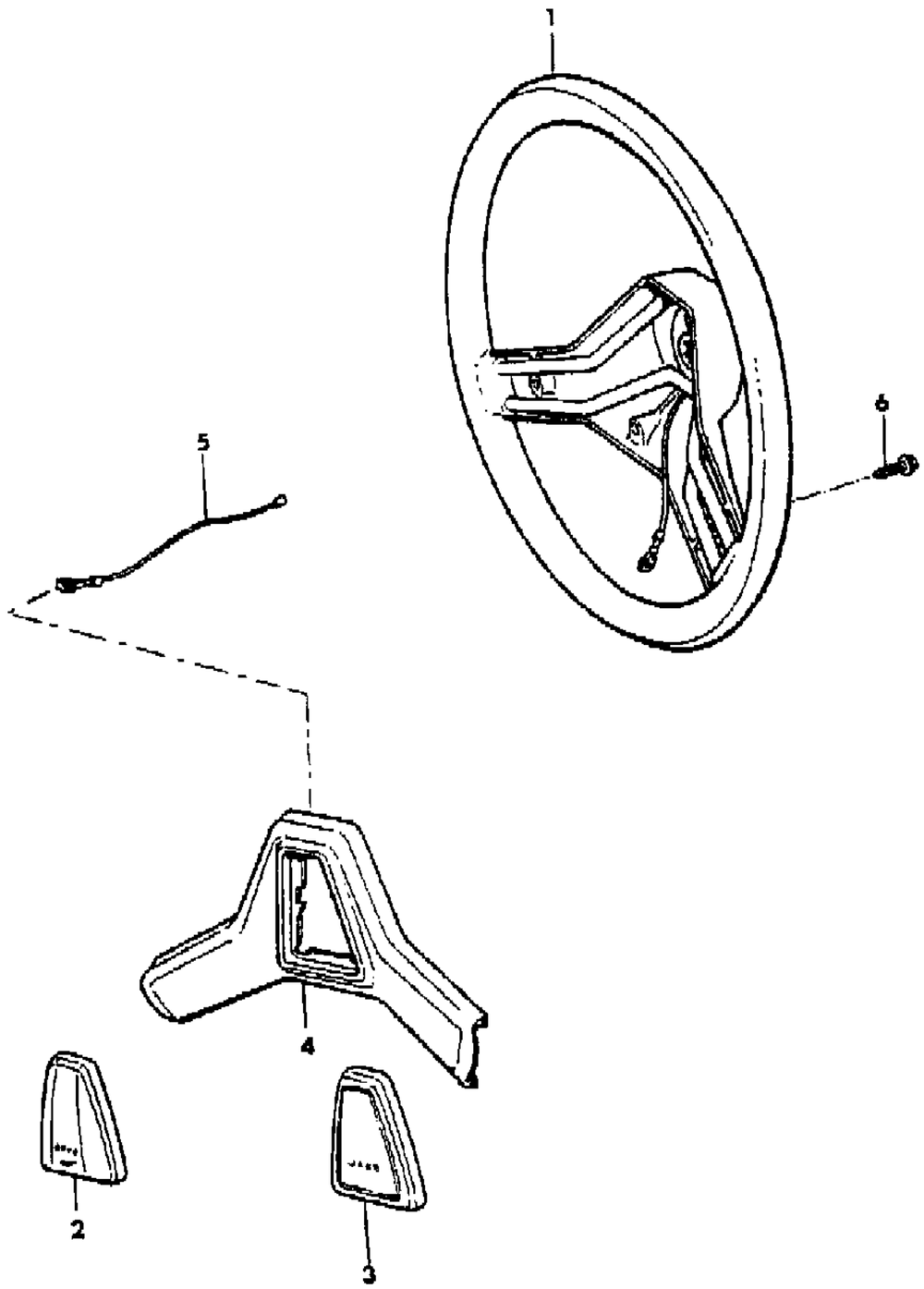

ITEM	PART NUMBER	QTY	BODY	MODEL	DESCRIPTION
1					WHEEL, Steering
	8350 0891	1			1984-85: Black
	8350 2809	1			1986: Black
	8350 2326	1			1984-86: Medium Blue
	8350 0892	1			1984-85: Slate Blue
	8350 0893	1			1984-86: Garnet
	8350 1419	1			1984-86: Honey
	8350 0894	1			1984-85: Almond
	8350 0895	1			1984-85: Nutmeg
	8350 3460	1			1986: Cordovan
2					BUTTON, Steering Wheel
	5200 0564	1			1984-85
	5200 1533	1			1986
3					BUTTON, Steering Wheel
	5200 0907	1			1984-85
	5200 1532	1			1986
4					COVER, Steering Wheel
	5200 0562	1			1984-86: Black
	5200 1884	1			1984-86: Medium Blue
	5200 0898	1			1984-85: Slate Blue
	5200 0897	1			1984-86: Garnet
	5200 1637	1			1984-86: Honey
	5200 0896	1			1984-85: Almond
	5200 0895	1			1984-85: Nutmeg
	5200 2876	1			1986: Cordovan
5	5200 0745	1			WIRE
6	3420 1298	3			SCREW

MODEL CODES

16=Cherokee 2 Dr.(1981-83)
17=Cherokee 2 Dr.(1981-83)
73=Cherokee 2WD-2 Dr.(1984-86)
74=Cherokee 2WD-4 Dr.(1984-86)
18=Cherokee 4 Dr.(1981-83)
77=Cherokee 4WD-2 Dr.(1984-86)
78=Cherokee 4WD-4 Dr.(1984-86)
85=CJ-5 (1981-83)
86=CJ-6(1981)
87=CJ-7(1981-86)
88=CJ-8, Scrambler(1981-86)
64=Comanche 2WD-6 Ft. Box(1986)
66=Comanche 2WD-7 Ft. Box(1986)
63=Comanche 4WD-6 Ft. Box(1986)
65=Comanche 4WD-7 Ft. Box(1986)
15=Grand Wagoneer 4 Dr.(1984-86)
25=J-10 Truck 7 Ft. Box(1981-84)
26=J10 Truck 8 Ft. Box(1981-86)
27=J-20 Truck 8 Ft. Box(1981-86)
15=Wagoneer 4 Dr.(1981-83)
75=Wagoneer 4WD-4 Dr.(1984-86)

BODY
CJ=CJ-5, CJ-6, CJ-7, CJ-8, Scrambler(1981-86)
MJ=Comanche Pickup(1986)

STYLES
SJ=Wagoneer(1981-83), Grand Wagoneer(1984-86), Cherokee(1981-83), J-10, J-20(1981-86)
XJ=Wagoneer(1984-86), Cherokee(1984-86)

AR = Use as Required - = Non Illustrated Part P.A.R. = Paint as Required

« RETURN TO GROUP INDEX

WHEEL, STEERING THREE SPOKE SPORT XJ CHEROKEE, XJ WAGONEER, COMANCHE
Figure 19-400

81J19 400

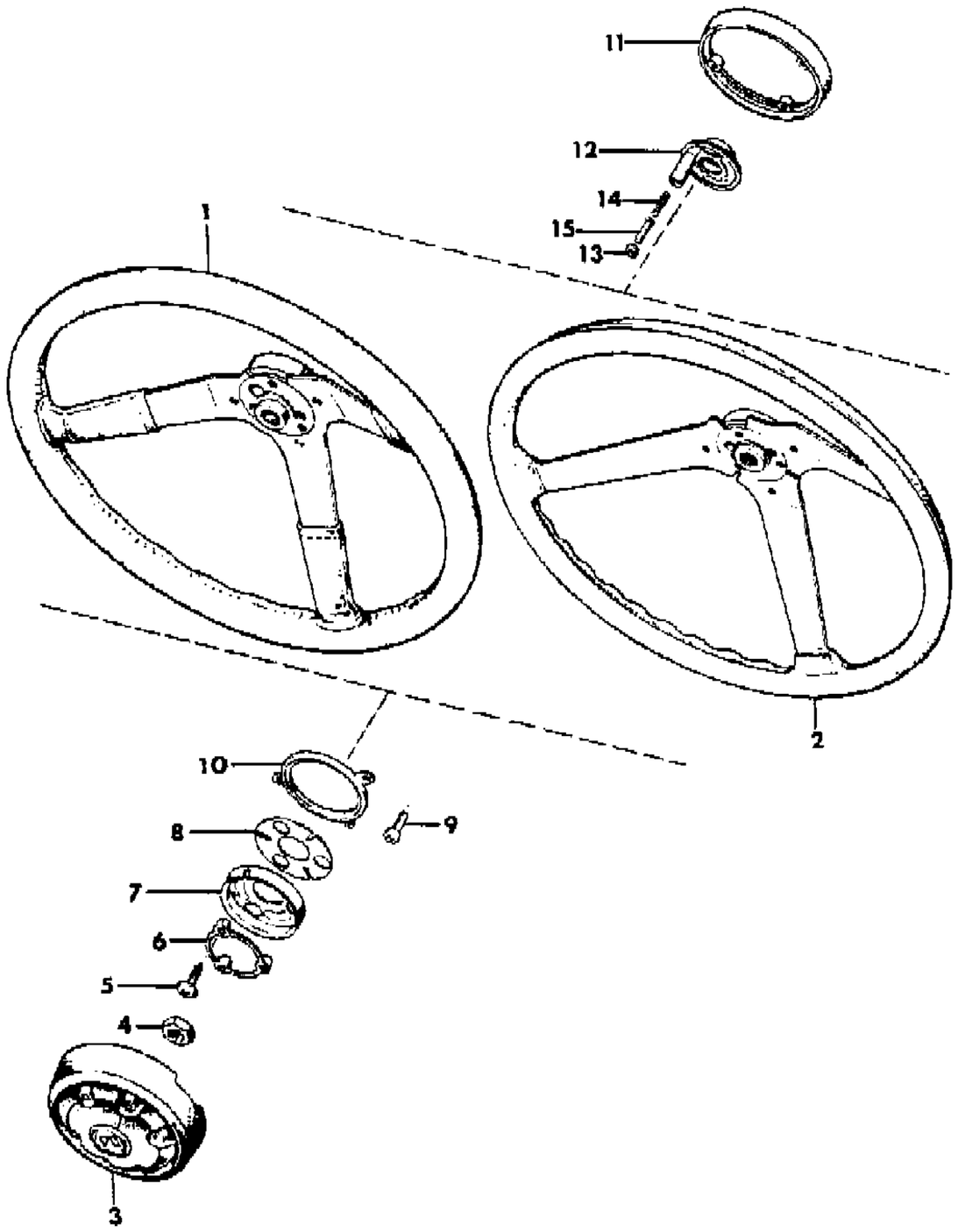

ITEM	PART NUMBER	QTY	BODY	MODEL	DESCRIPTION
1					WHEEL, Steering, Leather Wrap
	8350 2574	1			1986: Black
	8350 2324	1			1984-86: Medium Blue
	8350 0272	1			1984-85: Slate Blue
	8350 0273	1			1984-85: Garnet
	8350 2193	1			1986: Garnet
	8350 1417	1			1984-85: Honey
	8350 2195	1			1986: Honey
	8350 0274	1			1984-85: Almond
	8350 0275	1			1984-85: Nutmeg
	8350 3454	1			1986: Cordovan
	8350 3184	1			1986: Tan
2					WHEEL, Steering, Soft Feel
	8350 2575	1			1986: Black
	8350 2325	1			1984-86: Medium Blue
	8350 0277	1			1984-85: Slate Blue
	8350 0278	1			1984-85: Garnet
	8350 2197	1			1986: Garnet
	8350 1418	1			1984-85: Honey
	8350 2199	1			1986: Honey
	8350 0279	1			1984-85: Almond
	8350 0280	1			1984-85: Nutmeg
	8350 3458	1			1986: Cordovan
	8350 3185	1			1986: Tan
3					BUTTON, Steering Wheel
	5200 1889	1			1986: Black
	5200 1887	1			1984-86: Medium Blue
	5200 0427	1			1984-85: Slate Blue
	5200 0428	1			1984-86: Garnet
	5200 1629	1			1984-86: Honey
	5200 0429	1			1984-85: Almond
	5200 0430	1			1984-85: Nutmeg
	5200 2882	1			1986: Cordovan
	5200 2879	1			1986: Tan
4	J420 0414	1			NUT
5	J400 4167	3			SCREW
6	J318 6964	1			BUSHING
7	J324 2217	1			RECEIVER
8	J318 6965	1			SPRING

MODEL CODES

16=Cherokee 2 Dr.(1981-83)	78=Cherokee 4WD-4 Dr.(1984-86)	64=Comanche 2WD-6 Ft. Box(1986)	25=J-10 Truck 7 Ft. Box(1981-84)
17=Cherokee 2 Dr.(1981-83)	85=CJ-5 (1981-83)	66=Comanche 2WD-7 Ft. Box(1986)	26=J10 Truck 8 Ft. Box(1981-86)
73=Cherokee 2WD-2 Dr.(1984-86)	86=CJ-6(1981)	63=Comanche 4WD-6 Ft. Box(1986)	27=J-20 Truck 8 Ft. Box(1981-86)
74=Cherokee 2WD-4 Dr.(1984-86)	87=CJ-7(1981-86)	65=Comanche 4WD-7 Ft. Box(1986)	15=Wagoneer 4 Dr.(1981-83)
18=Cherokee 4 Dr.(1981-83)	88=CJ-8, Scrambler(1981-86)	15=Grand Wagoneer 4 Dr.(1984-86)	75=Wagoneer 4WD-4 Dr.(1984-86)
77=Cherokee 4WD-2 Dr.(1984-86)			

BODY
CJ=CJ-5, CJ-6, CJ-7, CJ-8, Scrambler(1981-86)
MJ=Comanche Pickup(1986)

STYLES
SJ=Wagoneer(1981-83), Grand Wagoneer(1984-86), Cherokee(1981-83), J-10, J-20(1981-86)
XJ=Wagoneer(1984-86), Cherokee(1984-86)

AR = Use as Required - = Non Illustrated Part P.A.R. = Paint as Required

WHEEL, STEERING THREE SPOKE SPORT XJ CHEROKEE, XJ WAGONEER, COMANCHE
Figure 19-400

81J19 400

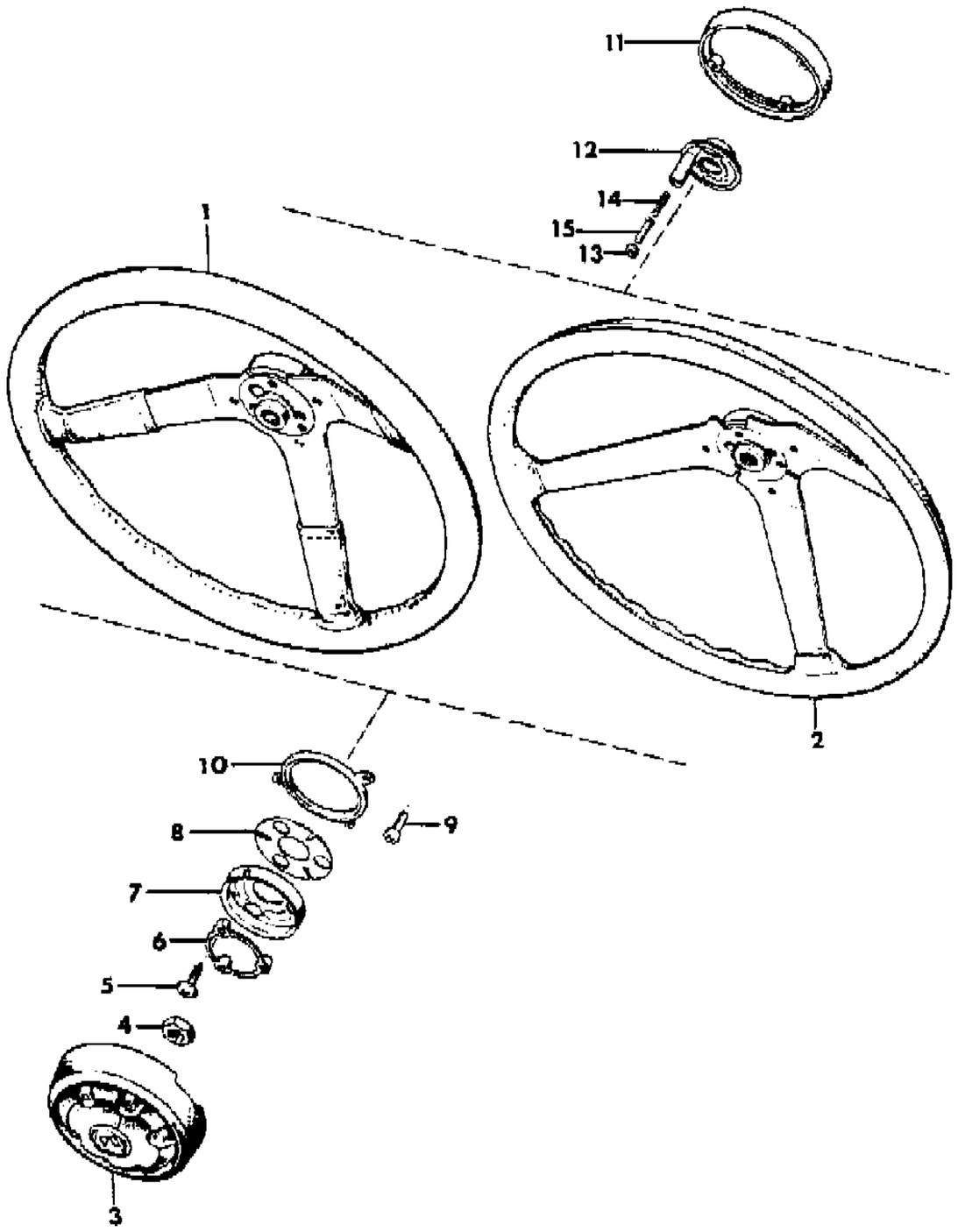

ITEM	PART NUMBER	QTY	BODY	MODEL	DESCRIPTION
9	J812 2359	3			SCREW
10	J321 3915	1			INSULATOR
11	J321 8276	1			EXTENSION, P.A.R.
12					CAM, Cancelling
	J448 7816	1			With Tilt Wheel
	J448 7711	1			Without Tilt Wheel
13	J318 7257	1			RETAINER
14	J318 7255	1			SPRING
15	J318 7249	1			PIN

MODEL CODES

16=Cherokee 2 Dr.(1981-83)
17=Cherokee 2 Dr.(1981-83)
73=Cherokee 2WD-2 Dr.(1984-86)
74=Cherokee 2WD-4 Dr.(1984-86)
18=Cherokee 4 Dr.(1981-83)
77=Cherokee 4WD-2 Dr.(1984-86)
78=Cherokee 4WD-4 Dr.(1984-86)
85=CJ-5 (1981-83)
86=CJ-6(1981)
87=CJ-7(1981-86)
88=CJ-8, Scrambler(1981-86)
64=Comanche 2WD-6 Ft. Box(1986)
66=Comanche 2WD-7 Ft. Box(1986)
63=Comanche 4WD-6 Ft. Box(1986)
65=Comanche 4WD-7 Ft. Box(1986)
15=Grand Wagoneer 4 Dr.(1984-86)
25=J-10 Truck 7 Ft. Box(1981-84)
26=J10 Truck 8 Ft. Box(1981-86)
27=J-20 Truck 8 Ft. Box(1981-86)
15=Wagoneer 4 Dr.(1981-83)
75=Wagoneer 4WD-4 Dr.(1984-86)

BODY
CJ=CJ-5, CJ-6, CJ-7, CJ-8, Scrambler(1981-86)
MJ=Comanche Pickup(1986)

STYLES
SJ=Wagoneer(1981-83), Grand Wagoneer(1984-86), Cherokee(1981-83), J-10, J-20(1981-86)
XJ=Wagoneer(1984-86), Cherokee(1984-86)

AR = Use as Required - = Non Illustrated Part P.A.R. = Paint as Required

« RETURN TO GROUP INDEX

WHEEL, STEERING 1986 TWO SPOKE SJ WAGONEER, J10, J20
Figure 19-500

81J19 500

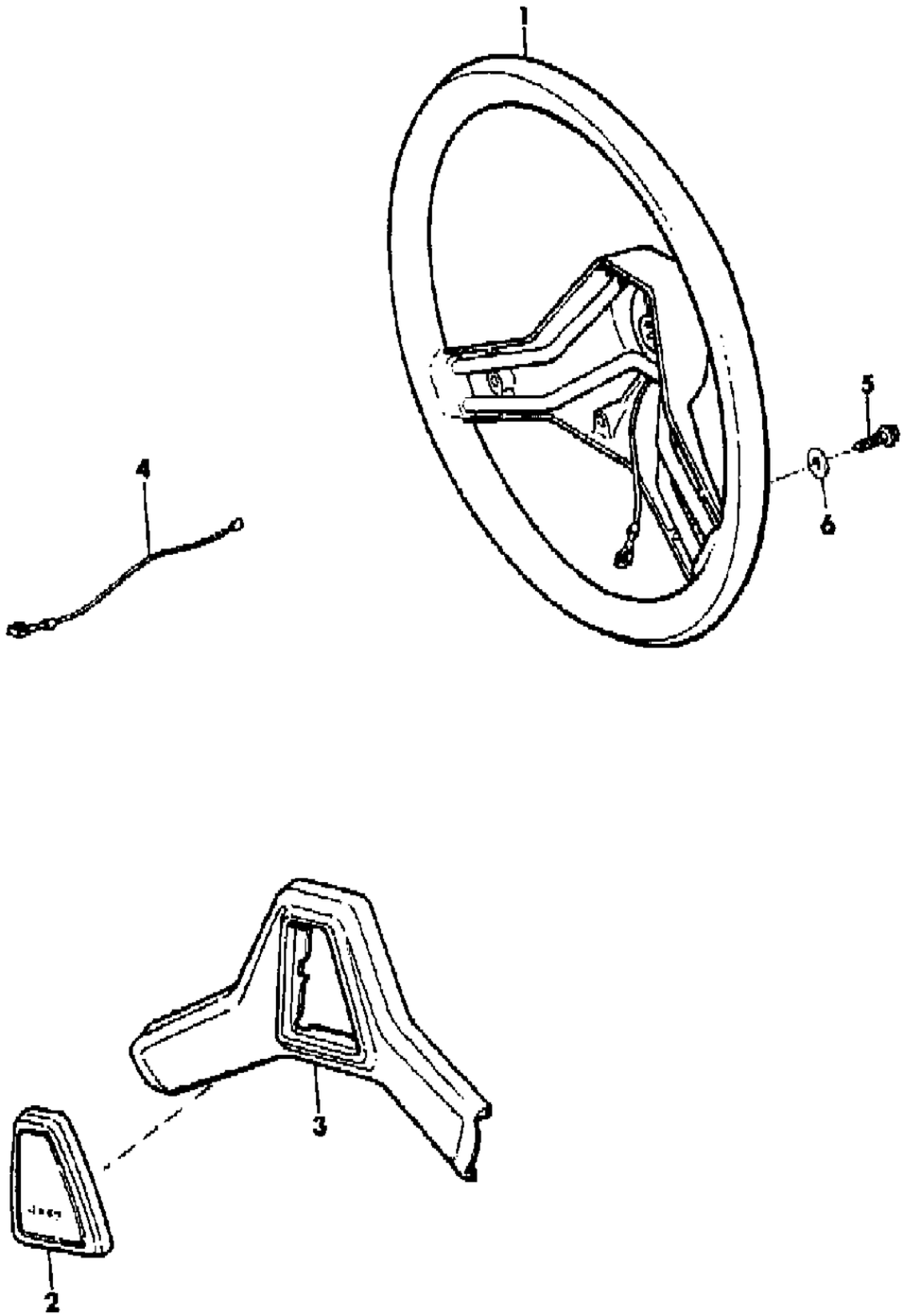

ITEM	PART NUMBER	QTY	BODY	MODEL	DESCRIPTION
1					WHEEL, Steering
	8350 2505	1			Garnet Leather
	8350 2506	1			Honey Leather
2	5200 1532	1			BUTTON, Steering Wheel
3					COVER, Steering Wheel
	5200 0897	1			Garnet
	5200 1637	1			Honey
4	5200 0745	1			WIRE
5	3420 1298	2			SCREW
6	J400 0481	2			WASHER

MODEL CODES

16=Cherokee 2 Dr.(1981-83)
17=Cherokee 2 Dr.(1981-83)
73=Cherokee 2WD-2 Dr.(1984-86)
74=Cherokee 2WD-4 Dr.(1984-86)
18=Cherokee 4 Dr.(1981-83)
77=Cherokee 4WD-2 Dr.(1984-86)
78=Cherokee 4WD-4 Dr.(1984-86)
85=CJ-5 (1981-83)
86=CJ-6(1981)
87=CJ-7(1981-86)
88=CJ-8, Scrambler(1981-86)
64=Comanche 2WD-6 Ft. Box(1986)
66=Comanche 2WD-7 Ft. Box(1986)
63=Comanche 4WD-6 Ft. Box(1986)
65=Comanche 4WD-7 Ft. Box(1986)
15=Grand Wagoneer 4 Dr.(1984-86)
25=J-10 Truck 7 Ft. Box(1981-84)
26=J10 Truck 8 Ft. Box(1981-86)
27=J-20 Truck 8 Ft. Box(1981-86)
15=Wagoneer 4 Dr.(1981-83)
75=Wagoneer 4WD-4 Dr.(1984-86)

BODY
CJ=CJ-5, CJ-6, CJ-7, CJ-8, Scrambler(1981-86)
MJ=Comanche Pickup(1986)

STYLES
SJ=Wagoneer(1981-83), Grand Wagoneer(1984-86), Cherokee(1981-83), J-10, J-20(1981-86)
XJ=Wagoneer(1984-86), Cherokee(1984-86)

AR = Use as Required - = Non Illustrated Part P.A.R. = Paint as Required

« RETURN TO GROUP INDEX

WHEEL, STEERING THREE SPOKE STANDARD SJ CHEROKEE, SJ WAGONEER, J10, J20
Figure 19-600

81J19 600

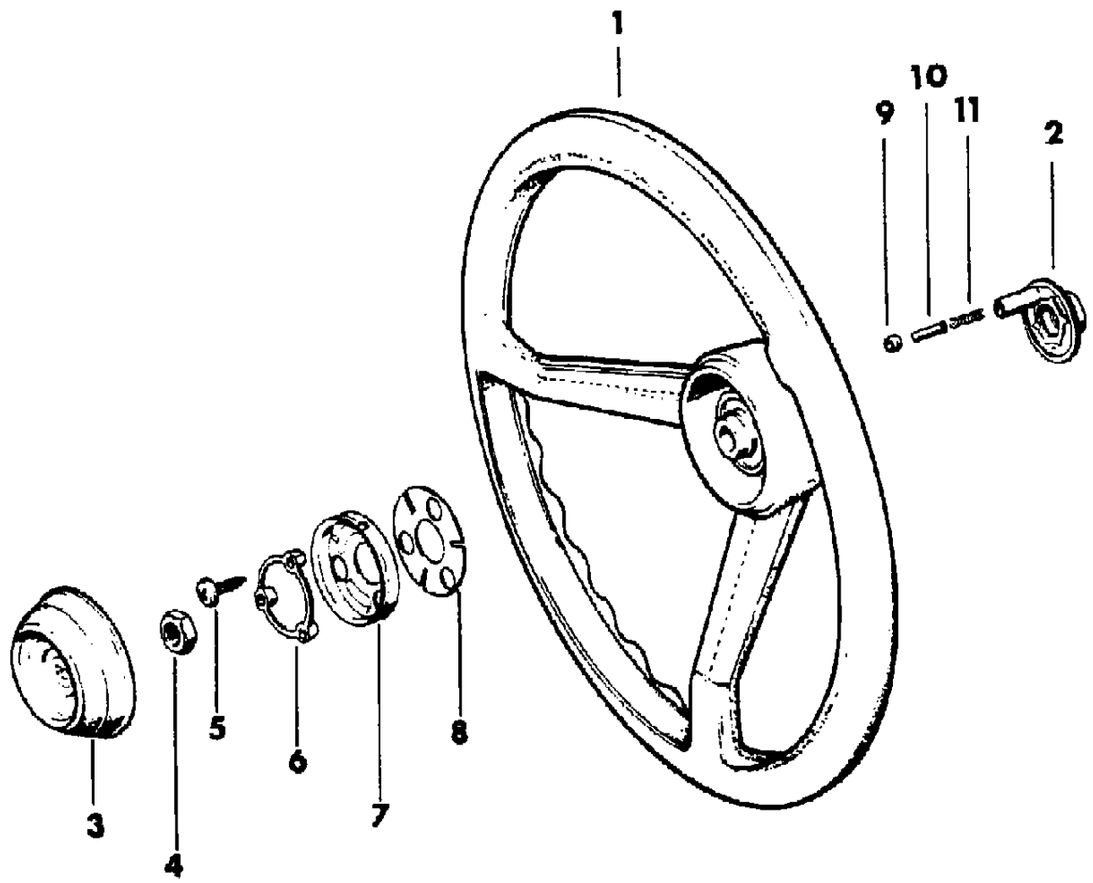

ITEM	PART NUMBER	QTY	BODY	MODEL	DESCRIPTION
1					WHEEL, Steering
	J536 0060	1			1981-86: Black
	J536 2776	1			1981: Blue
	J536 3643	1			1982-83: Blue
	J536 4987	1			1984-85: Dark Almond
	J536 2777	1			1981-83: Medium Brown
	J536 4988	1			1984-85: Nutmeg
	J536 5123	1			1985: Honey
2					CAM, Cancelling
	J448 7816	1			With Tilt Wheel
	J448 7711	1			Without Tilt Wheel
3					BUTTON, Steering Wheel
	J536 2568	1			1981-86: Black
	J536 2569	1			1981: Blue
	J536 3678	1			1982-83: Blue
	J536 4996	1			1984-85: Dark Almond
	J536 2571	1			1981-83: Medium Brown
	J536 4997	1			1984: Nutmeg
	J536 5124	1			1985: Honey
4	J420 0414	1			NUT
5	J400 4167	3			SCREW
6	J318 6964	1			BUSHING
7	J324 2217	1			RECEIVER
8	J318 6965	1			SPRING
9	J318 7257	1			RETAINER
10	J318 7249	1			PIN
11	J318 7255	1			SPRING

MODEL CODES
16=Cherokee 2 Dr.(1981-83)
17=Cherokee 2 Dr.(1981-83)
73=Cherokee 2WD-2 Dr.(1984-86)
74=Cherokee 2WD-4 Dr.(1984-86)
18=Cherokee 4 Dr.(1981-83)
77=Cherokee 4WD-2 Dr.(1984-86)
78=Cherokee 4WD-4 Dr.(1984-86)
85=CJ-5 (1981-83)
86=CJ-6(1981)
87=CJ-7(1981-86)
88=CJ-8, Scrambler(1981-86)
64=Comanche 2WD-6 Ft. Box(1986)
66=Comanche 2WD-7 Ft. Box(1986)
63=Comanche 4WD-6 Ft. Box(1986)
65=Comanche 4WD-7 Ft. Box(1986)
15=Grand Wagoneer 4 Dr.(1984-86)
25=J-10 Truck 7 Ft. Box(1981-84)
26=J10 Truck 8 Ft. Box(1981-86)
27=J-20 Truck 8 Ft. Box(1981-86)
15=Wagoneer 4 Dr.(1981-83)
75=Wagoneer 4WD-4 Dr.(1984-86)

BODY
CJ=CJ-5, CJ-6, CJ-7, CJ-8, Scrambler(1981-86)
MJ=Comanche Pickup(1986)

STYLES
SJ=Wagoneer(1981-83), Grand Wagoneer(1984-86), Cherokee(1981-83), J-10, J-20(1981-86)
XJ=Wagoneer(1984-86), Cherokee(1984-86)

AR = Use as Required - = Non Illustrated Part P.A.R. = Paint as Required

« RETURN TO GROUP INDEX

WHEEL, STEERING SPORT WHEELS SJ CHEROKEE, SJ WAGONEER, J10, J20
Figure 19-700

81J19 700

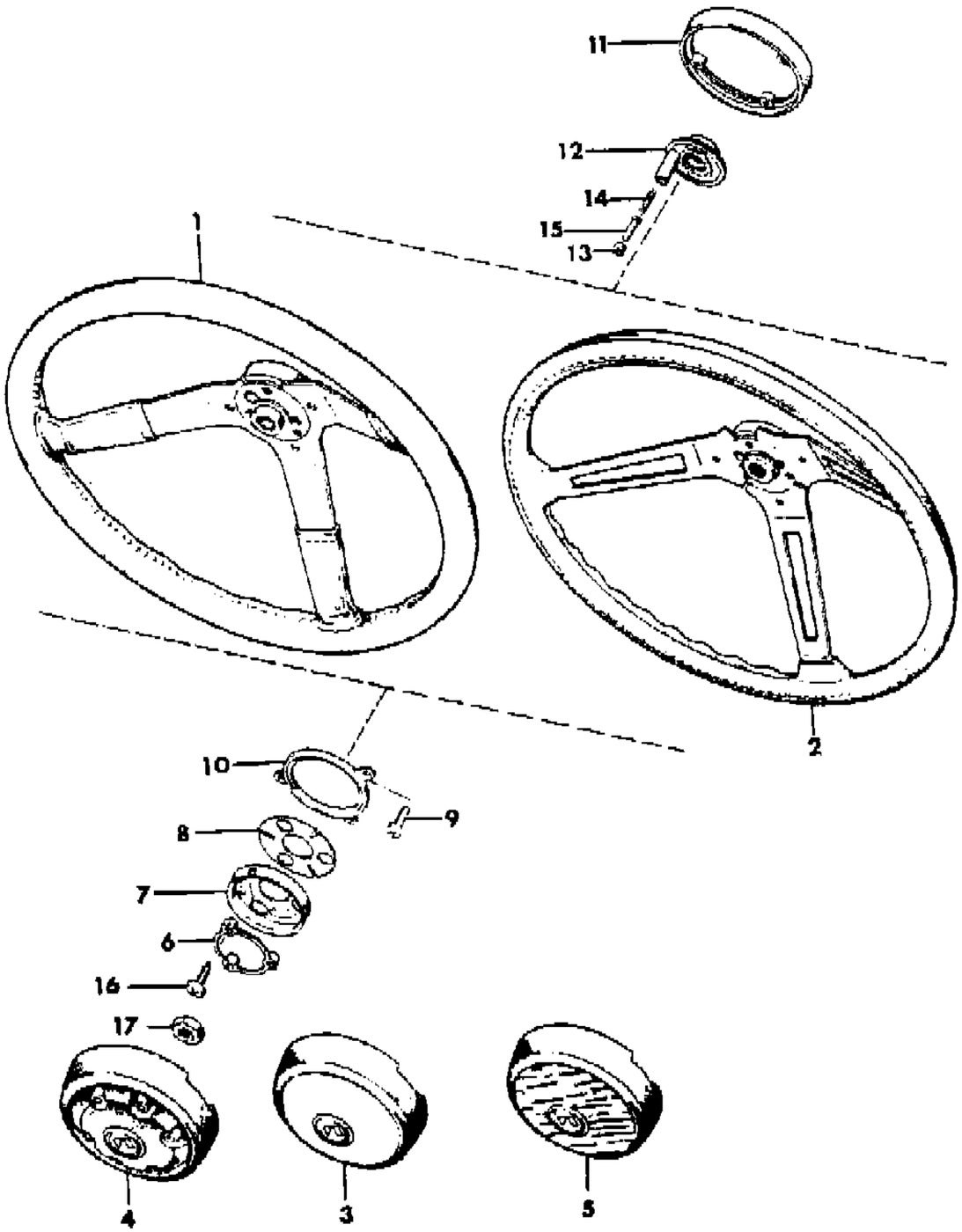

ITEM	PART NUMBER	QTY	BODY	MODEL	DESCRIPTION
1					WHEEL, Steering, Leather Wrap
	J813 3026	1			1981-86: Black
	J813 3249	1			1981: Blue
	J813 3814	1			1982-83: Blue
	8351 0066	1			1984-85: Dark Almond
	J813 3246	1			1981-83: Medium Brown
	J813 3247	1			1981-85: Nutmeg
	8351 0067	1			1985: Garnet
	8351 0068	1			1985: Honey
	8350 2195	1			1986: Honey
2					WHEEL, Steering, Soft Feel
	J813 3016	1			1981-86: Black
	J813 3017	1			1981: Blue
	J813 3813	1			1982-83: Blue
	8351 0063	1			1984-85: Dark Almond
	J813 3020	1			1981-83: Medium Brown
	J813 3019	1			1981-85: Nutmeg
	8351 0065	1			1985: Honey
	8350 2199	1			1986
3					BUTTON, Steering Wheel
	J536 2573	1			1981-86: Black
	J536 2574	1			1981: Blue
	J536 3677	1			1982-83: Blue
	J536 4993	1			1984-85: Dark Almond
	J536 2576	1			1981-83: Medium Brown
	J536 2575	1			1981-85: Nutmeg
	J536 5129	1			1985: Garnet
	J536 5126	1			1985: Honey
	5200 1629	1			1986: Honey
4					BUTTON, Steering Wheel
	J536 2582	1			1981-86: Black
	J536 2583	1			1981: Blue
	J536 3644	1			1982-83: Blue
	J536 4992	1			1984-85: Dark Almond
	J536 2585	1			1981-83: Medium Brown
	J536 2584	1			1981-85: Nutmeg
	J536 5127	1			1985: Honey
5					BUTTON, Steering Wheel
	J536 2577	1			1981-86: Black

MODEL CODES

16=Cherokee 2 Dr.(1981-83)
17=Cherokee 2 Dr.(1981-83)
73=Cherokee 2WD-2 Dr.(1984-86)
74=Cherokee 2WD-4 Dr.(1984-86)
18=Cherokee 4 Dr.(1981-83)
77=Cherokee 4WD-2 Dr.(1984-86)
78=Cherokee 4WD-4 Dr.(1984-86)
85=CJ-5 (1981-83)
86=CJ-6(1981)
87=CJ-7(1981-86)
88=CJ-8, Scrambler(1981-86)
64=Comanche 2WD-6 Ft. Box(1986)
66=Comanche 2WD-7 Ft. Box(1986)
63=Comanche 4WD-6 Ft. Box(1986)
65=Comanche 4WD-7 Ft. Box(1986)
15=Grand Wagoneer 4 Dr.(1984-86)
25=J-10 Truck 7 Ft. Box(1981-84)
26=J10 Truck 8 Ft. Box(1981-86)
27=J-20 Truck 8 Ft. Box(1981-86)
15=Wagoneer 4 Dr.(1981-83)
75=Wagoneer 4WD-4 Dr.(1984-86)

BODY
CJ=CJ-5, CJ-6, CJ-7, CJ-8, Scrambler(1981-86)
MJ=Comanche Pickup(1986)

STYLES
SJ=Wagoneer(1981-83), Grand Wagoneer(1984-86), Cherokee(1981-83), J-10, J-20(1981-86)
XJ=Wagoneer(1984-86), Cherokee(1984-86)

AR = Use as Required - = Non Illustrated Part P.A.R. = Paint as Required

WHEEL, STEERING SPORT WHEELS SJ CHEROKEE, SJ WAGONEER, J10, J20
Figure 19-700

81J19 700

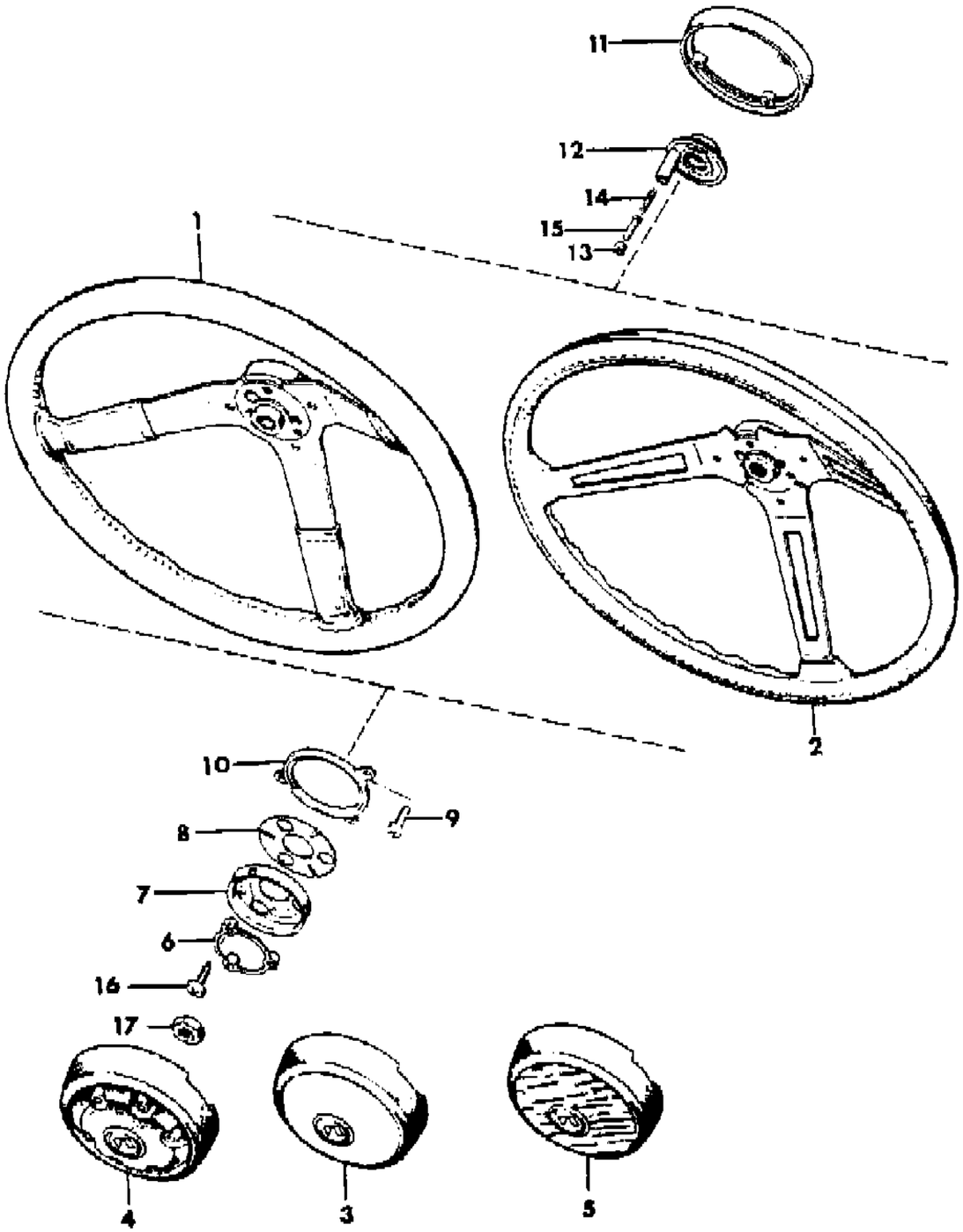

ITEM	PART NUMBER	QTY	BODY	MODEL	DESCRIPTION
	J536 2578	1			1981: Blue
	J536 3645	1			1982-83: Blue
	J536 4999	1			1984-85: Dark Almond
	J536 2580	1			1981-83: Medium Brown
	J536 2579	1			1981-85: Nutmeg
6	J318 6964	1			BUSHING
7	J324 2217	1			RECEIVER
8	J318 6965	1			SPRING
9	J812 2359	3			SCREW
10	J321 3915	1			INSULATOR
11	J321 8276	1			EXTENSION, P.A.R.
12					CAM, Cancelling
	J448 7816	1			With Tilt Wheel
	J448 7711	1			Without Tilt Wheel
13	J318 7257	1			RETAINER
14	J318 7255	1			SPRING
15	J318 7249	1			PIN
16	J400 4167	3			SCREW
17	J420 0414	1			NUT

MODEL CODES

16=Cherokee 2 Dr.(1981-83)
17=Cherokee 2 Dr.(1981-83)
73=Cherokee 2WD-2 Dr.(1984-86)
74=Cherokee 2WD-4 Dr.(1984-86)
18=Cherokee 4 Dr.(1981-83)
77=Cherokee 4WD-2 Dr.(1984-86)
78=Cherokee 4WD-4 Dr.(1984-86)
85=CJ-5 (1981-83)
86=CJ-6(1981)
87=CJ-7(1981-86)
88=CJ-8, Scrambler(1981-86)
64=Comanche 2WD-6 Ft. Box(1986)
66=Comanche 2WD-7 Ft. Box(1986)
63=Comanche 4WD-6 Ft. Box(1986)
65=Comanche 4WD-7 Ft. Box(1986)
15=Grand Wagoneer 4 Dr.(1984-86)
25=J-10 Truck 7 Ft. Box(1981-84)
26=J10 Truck 8 Ft. Box(1981-86)
27=J-20 Truck 8 Ft. Box(1981-86)
15=Wagoneer 4 Dr.(1981-83)
75=Wagoneer 4WD-4 Dr.(1984-86)

BODY
CJ=CJ-5, CJ-6, CJ-7, CJ-8, Scrambler(1981-86)
MJ=Comanche Pickup(1986)

STYLES
SJ=Wagoneer(1981-83), Grand Wagoneer(1984-86), Cherokee(1981-83), J-10, J-20(1981-86)
XJ=Wagoneer(1984-86), Cherokee(1984-86)

AR = Use as Required - = Non Illustrated Part P.A.R. = Paint as Required

« RETURN TO GROUP INDEX

WHEEL, STEERING FOUR SPOKE SJ CHEROKEE, SJ WAGONEER, J10, J20
Figure 19-800

81J19 800

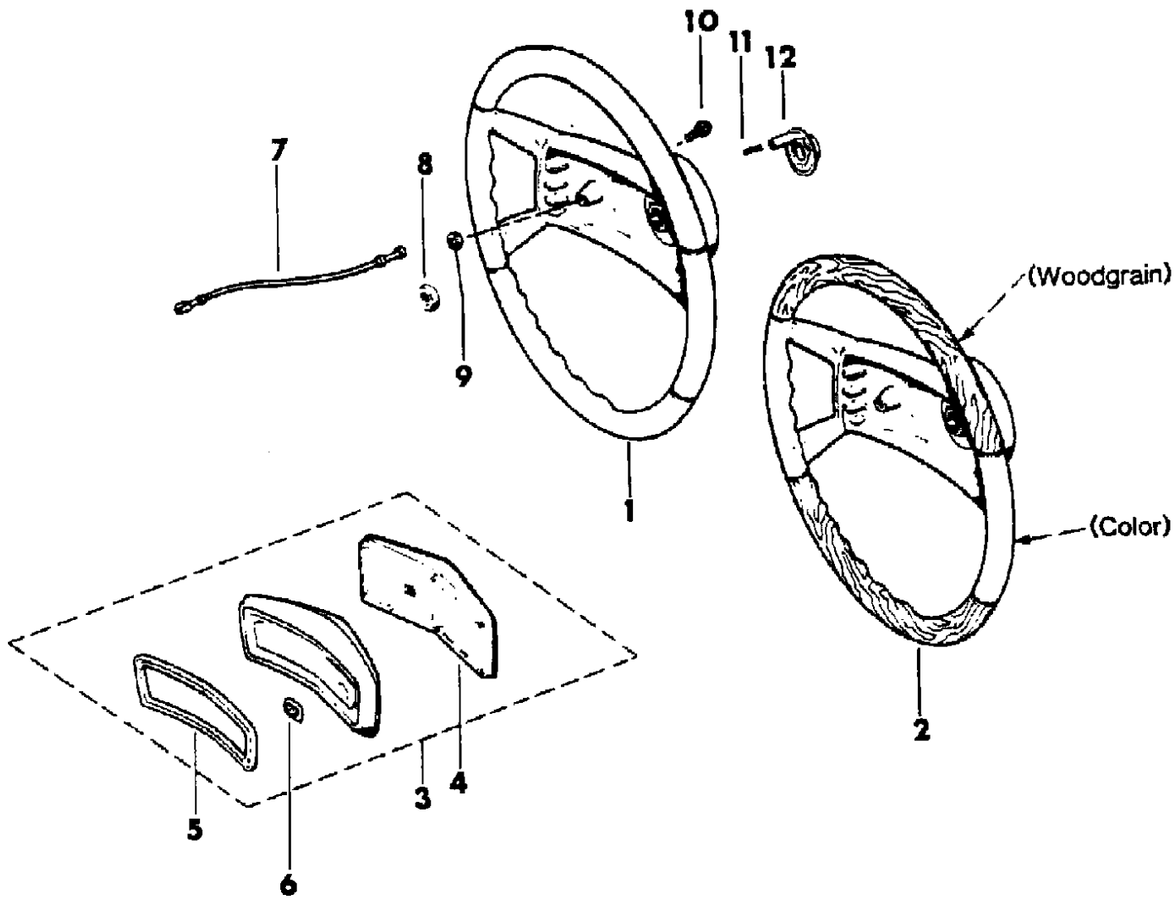

ITEM	PART NUMBER	QTY	BODY	MODEL	DESCRIPTION
1					WHEEL, Steering
	J325 1091	1		15	1981-83: Black
	J325 1092	1		15	1981: Blue
	J324 0873	1		15	1982-83: Blue
	J323 7686	1		15	1981-83: Medium Brown
	J323 7688	1		15	1981-83: Nutmeg
2					WHEEL, Steering
	J324 0872	1			1982-83: Blue, EXPORT
	J324 0043	1			1982-83: Nutmeg, EXPORT
3					COVER ASSEMBLY, Steering Wheel
	J812 9576	1			1981-83: Black
	J812 9577	1			1981: Blue
	J813 4110	1			1982-83: Blue
	J813 3047	1			1981-83: Medium Brown
	J813 3045	1			1981-83: Nutmeg
4	J325 1076	1			RETAINER ASSEMBLY, Horn Buttons ***
5	J325 1073	1			ACCENT STRIP ***
6	J325 1071	1			INSERT
7	J322 2301	1			WIRE
8	J420 0414	1			NUT
9	J319 7015	2			WASHER
10	J400 3949	2			SCREW
11	J318 7255	1			SPRING
12	J448 7816	1			CAM, Cancelling

MODEL CODES

16=Cherokee 2 Dr.(1981-83)
17=Cherokee 2 Dr.(1981-83)
73=Cherokee 2WD-2 Dr.(1984-86)
74=Cherokee 2WD-4 Dr.(1984-86)
18=Cherokee 4 Dr.(1981-83)
77=Cherokee 4WD-2 Dr.(1984-86)
78=Cherokee 4WD-4 Dr.(1984-86)
85=CJ-5 (1981-83)
86=CJ-6(1981)
87=CJ-7(1981-86)
88=CJ-8, Scrambler(1981-86)
64=Comanche 2WD-6 Ft. Box(1986)
66=Comanche 2WD-7 Ft. Box(1986)
63=Comanche 4WD-6 Ft. Box(1986)
65=Comanche 4WD-7 Ft. Box(1986)
15=Grand Wagoneer 4 Dr.(1984-86)
25=J-10 Truck 7 Ft. Box(1981-84)
26=J10 Truck 8 Ft. Box(1981-86)
27=J-20 Truck 8 Ft. Box(1981-86)
15=Wagoneer 4 Dr.(1981-83)
75=Wagoneer 4WD-4 Dr.(1984-86)

BODY
CJ=CJ-5, CJ-6, CJ-7, CJ-8, Scrambler(1981-86)
MJ=Comanche Pickup(1986)

STYLES
SJ=Wagoneer(1981-83), Grand Wagoneer(1984-86), Cherokee(1981-83), J-10, J-20(1981-86)
XJ=Wagoneer(1984-86), Cherokee(1984-86)

AR = Use as Required - = Non Illustrated Part P.A.R. = Paint as Required

« RETURN TO GROUP INDEX

COLUMN ASSEMBLY, STEERING CJ-5,6,7,8, SCRAMBLER
Figure 19-900

81J19 900

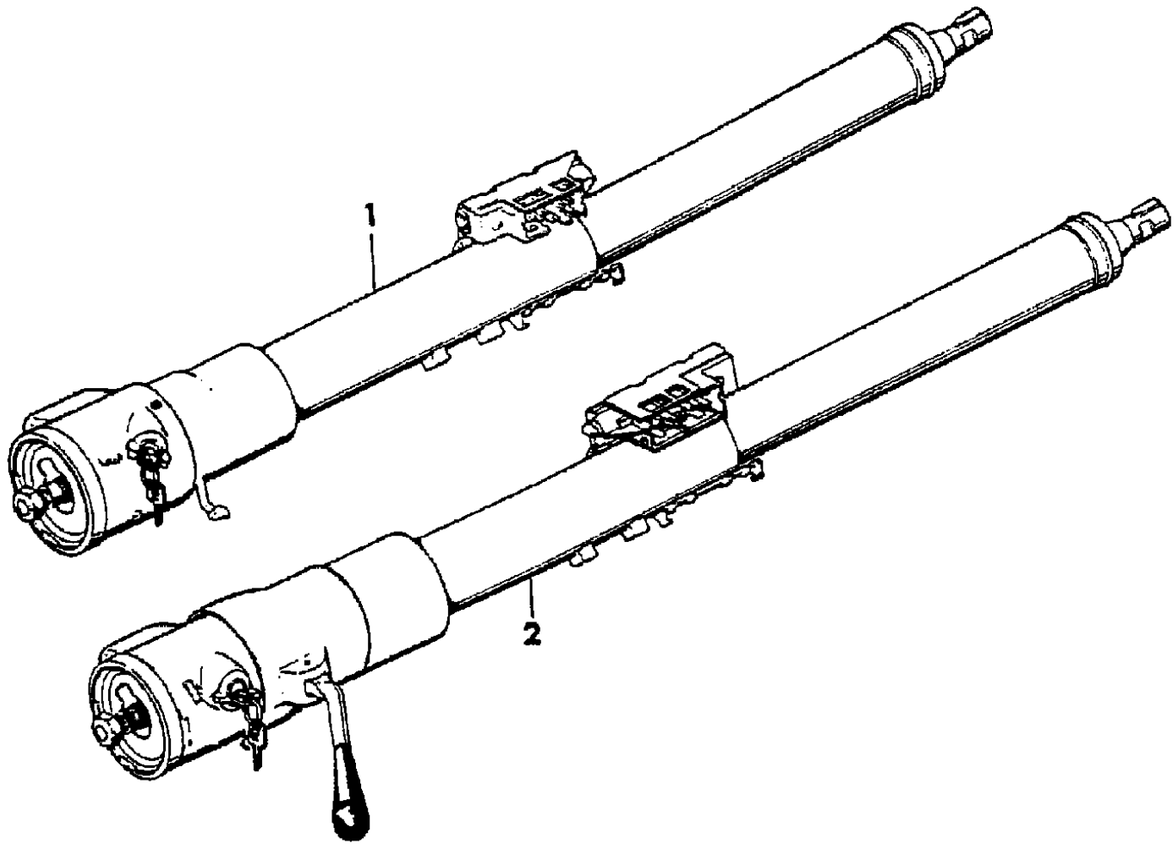

ITEM	PART NUMBER	QTY	BODY	MODEL	DESCRIPTION
1					COLUMN ASSEMBLY, With Floor Shift
					With Tilt Wheel
	J535 9888	1			1981-83
	J536 4765	1			1984
	5200 2134	1			1985-86
	J535 9889	1			1981-84: EXPORT, Right Hand Drive
	5200 2135	1			1985-86: EXPORT, Right Hand Drive
					Without Tilt Wheel
	J535 8675	1			1981-83
	J536 4764	1			1984
	5200 2132	1			1985-86
	J535 9108	1			1981-84: EXPORT, Right Hand Drive
	5200 2133	1			1985-86: EXPORT, Right Hand Drive
2					COLUMN ASSEMBLY, With Column Shift
					With Tilt Wheel
	J535 9886	1			1981-83
	J536 4767	1			1984
	5200 2139	1			1985-86
	J535 9887	1			1981-84: EXPORT
	5200 2140	1			1985-86: EXPORT
					Without Tilt Wheel
	J535 9884	1			1981-83
	J536 4766	1			1984
	5200 2136	1			1985-86
	J535 9885	1			1981-84: EXPORT
	5200 2137	1			1985-86: EXPORT

MODEL CODES
16=Cherokee 2 Dr.(1981-83)
17=Cherokee 2 Dr.(1981-83)
73=Cherokee 2WD-2 Dr.(1984-86)
74=Cherokee 2WD-4 Dr.(1984-86)
18=Cherokee 4 Dr.(1981-83)
77=Cherokee 4WD-2 Dr.(1984-86)
78=Cherokee 4WD-4 Dr.(1984-86)
85=CJ-5 (1981-83)
86=CJ-6(1981)
87=CJ-7(1981-86)
88=CJ-8, Scrambler(1981-86)
64=Comanche 2WD-6 Ft. Box(1986)
66=Comanche 2WD-7 Ft. Box(1986)
63=Comanche 4WD-6 Ft. Box(1986)
65=Comanche 4WD-7 Ft. Box(1986)
15=Grand Wagoneer 4 Dr.(1984-86)
25=J-10 Truck 7 Ft. Box(1981-84)
26=J10 Truck 8 Ft. Box(1981-86)
27=J-20 Truck 8 Ft. Box(1981-86)
15=Wagoneer 4 Dr.(1981-83)
75=Wagoneer 4WD-4 Dr.(1984-86)

BODY
CJ=CJ-5, CJ-6, CJ-7, CJ-8, Scrambler(1981-86)
MJ=Comanche Pickup(1986)

STYLES
SJ=Wagoneer(1981-83), Grand Wagoneer(1984-86), Cherokee(1981-83), J-10, J-20(1981-86)
XJ=Wagoneer(1984-86), Cherokee(1984-86)

AR = Use as Required - = Non Illustrated Part P.A.R. = Paint as Required

« RETURN TO GROUP INDEX

HOUSING, STEERING COLUMN UPPER WITH FLOOR SHIFT, WITHOUT TILT WHEEL CJ-5,6,7,8, SCRAMBLER
Figure 19-1000

81J19 1000

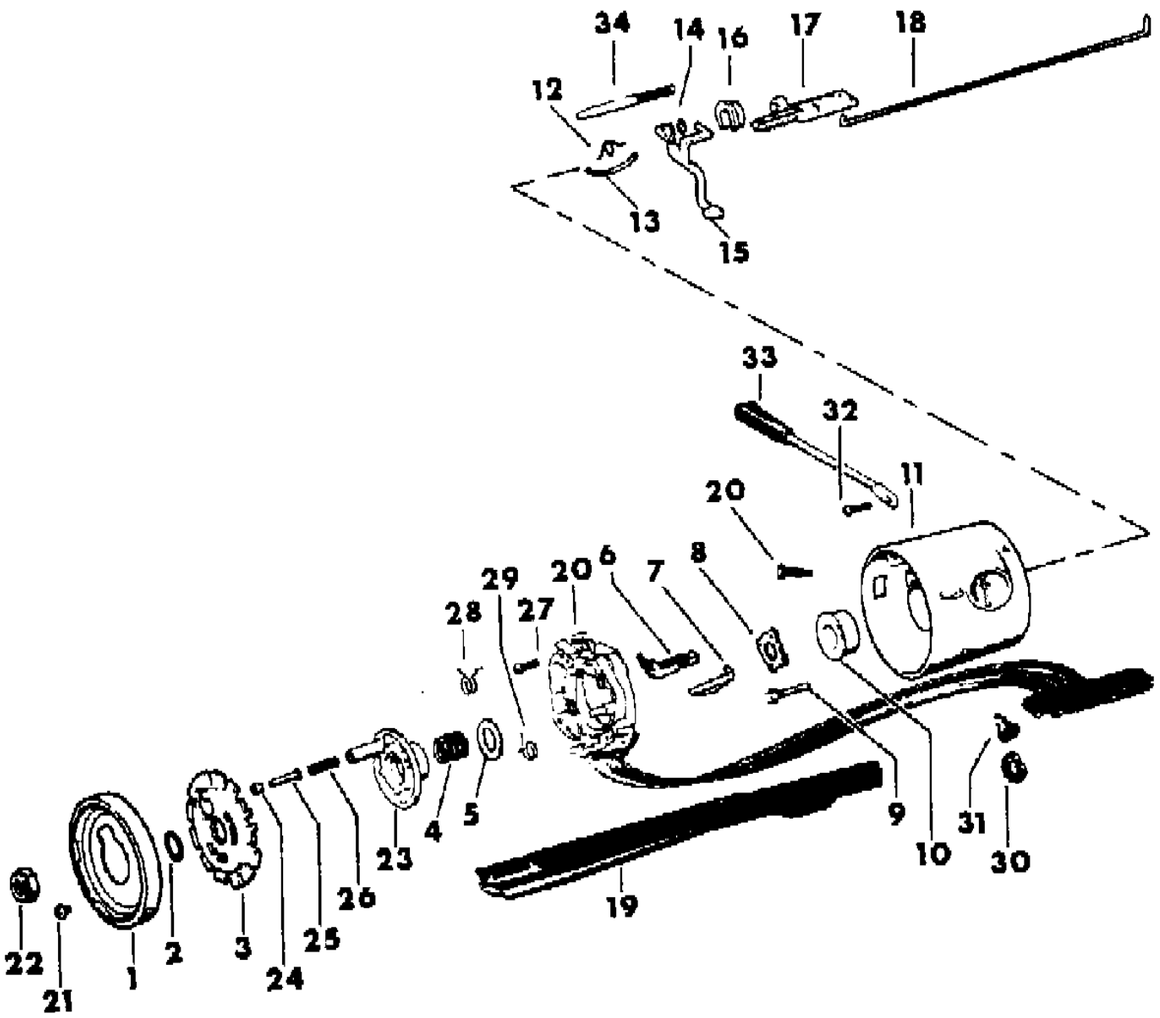

ITEM	PART NUMBER	QTY	BODY	MODEL	DESCRIPTION
1	J322 8743	1			COVER, Shift Lock
2	J320 8377	1			RING, Retaining
3	J812 7831	1			LOCK
4	J448 7765	1			SPRING
5	J320 8008	1			WASHER
6	J321 1423	1			SWITCH
7	J448 7713	1			CLIP
8	J812 7851	1			RETAINER
9	J448 7761	3			SCREW
10	J812 7850	1			BEARING
11	J812 7845	1			HOUSING
12	J812 0185	1			SPRING
13	J448 7774	1			SPRING
14	J812 0186	1			WASHER
15	J812 0182	1			LEVER
16	J448 7777	1			WASHER
17	J812 1437	1			RACK
18	J448 7782	1			ROD
19	J448 7741	1			PROTECTOR
20	5600 2011	1			SWITCH
21	J448 8301	3			SCREW
22	J420 0414	1			NUT
23	J448 7711	1			CAM, Cancelling
24	J318 7257	1			RETAINER
25	J318 7249	1			PIN
26	J318 7255	1			SPRING
27	J448 8301	3			SCREW
28	J812 9335	1			SPRING, Right Upper
29	J812 9317	1			SPRING, Left Lower
30	J812 0097	1			SECTOR
31	J323 8343	1			KNOB, Hazard Warning
32	J448 8318	1			SCREW
33	J536 2173	1			LEVER, Turn Signal
34					BOLT
	J448 7897	1			Left Hand Drive
	J813 0676	1			EXPORT, Right Hand Drive

MODEL CODES

16=Cherokee 2 Dr.(1981-83)
17=Cherokee 2 Dr.(1981-83)
73=Cherokee 2WD-2 Dr.(1984-86)
74=Cherokee 2WD-4 Dr.(1984-86)
18=Cherokee 4 Dr.(1981-83)
77=Cherokee 4WD-2 Dr.(1984-86)
78=Cherokee 4WD-4 Dr.(1984-86)
85=CJ-5 (1981-83)
86=CJ-6(1981)
87=CJ-7(1981-86)
88=CJ-8, Scrambler(1981-86)
64=Comanche 2WD-6 Ft. Box(1986)
66=Comanche 2WD-7 Ft. Box(1986)
63=Comanche 4WD-6 Ft. Box(1986)
65=Comanche 4WD-7 Ft. Box(1986)
15=Grand Wagoneer 4 Dr.(1984-86)
25=J-10 Truck 7 Ft. Box(1981-84)
26=J10 Truck 8 Ft. Box(1981-86)
27=J-20 Truck 8 Ft. Box(1981-86)
15=Wagoneer 4 Dr.(1981-83)
75=Wagoneer 4WD-4 Dr.(1984-86)

BODY
CJ=CJ-5, CJ-6, CJ-7, CJ-8, Scrambler(1981-86)
MJ=Comanche Pickup(1986)

STYLES
SJ=Wagoneer(1981-83), Grand Wagoneer(1984-86), Cherokee(1981-83), J-10, J-20(1981-86)
XJ=Wagoneer(1984-86), Cherokee(1984-86)

AR = Use as Required - = Non Illustrated Part P.A.R. = Paint as Required

« RETURN TO GROUP INDEX

HOUSING, STEERING COLUMN LOWER WITH FLOOR SHIFT, WITHOUT TILT WHEEL CJ-5,6,7,8, SCRAMBLER
Figure 19-1100

81J19 1100

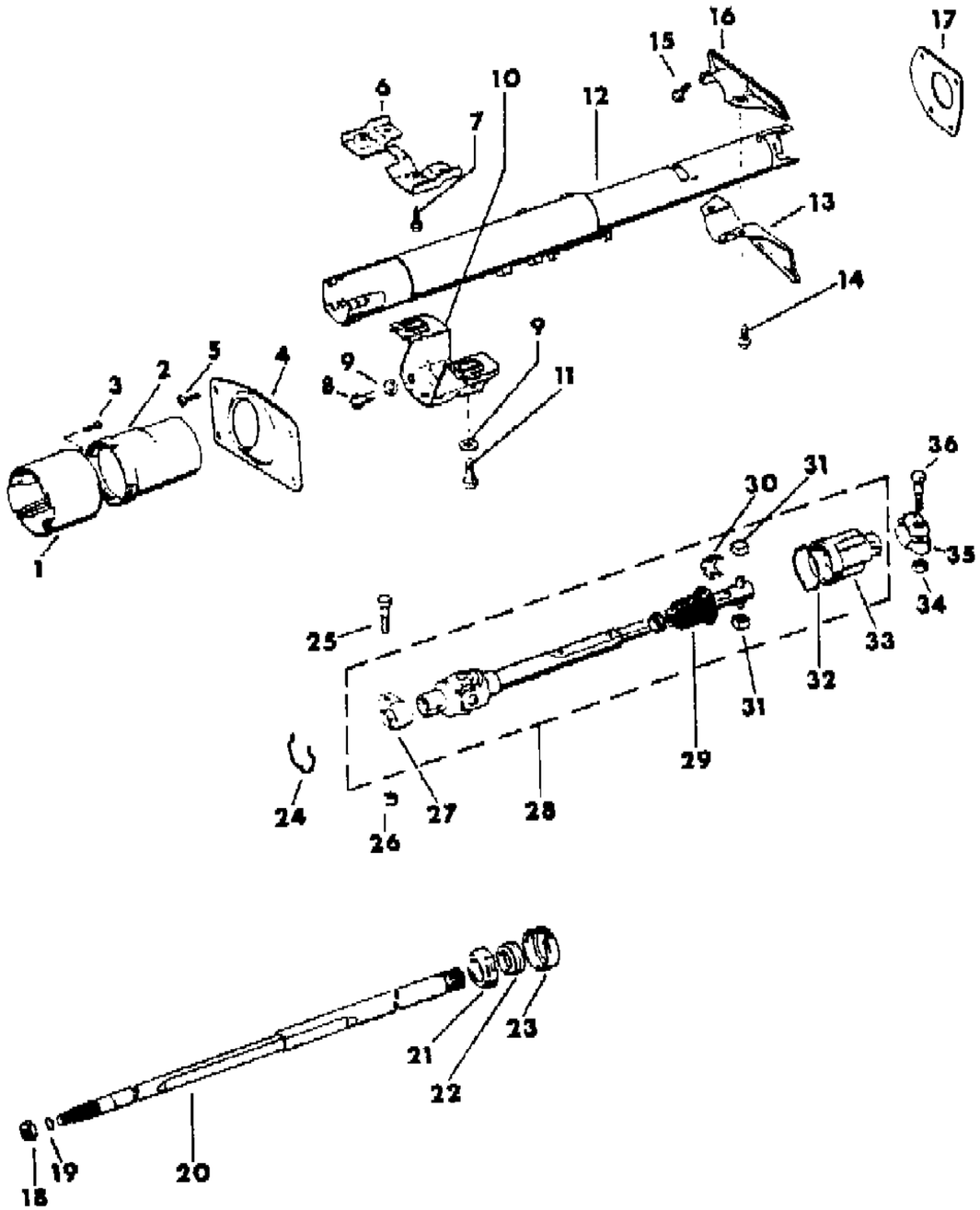

ITEM	PART NUMBER	QTY	BODY	MODEL	DESCRIPTION
1	J812 0181	1			BOWL
2	J812 0184	1			SHROUD
3	J448 8301	3			SCREW
4	J535 4777	1			BEZEL
5	J999 8220	1			SCREW
6	J535 5544	1			ADAPTER
7	J400 5665	2			SCREW
8	S941 8778	2			SCREW
9	J012 0388	AR			WASHER
10					BRACKET
	J319 5280	1			With Manual Transmission
					With Automatic Transmission
	J539 1229	1			Left Hand Drive
	J319 5280	1			EXPORT, Right Hand Drive
11	1150 2764	4			SCREW
12	J813 0177	1			JACKET ASSEMBLY
13	J319 6897	1			PLATE
14	J400 4520	4			SCREW
15	J027 3573	4			SCREW
16	J319 6870	1			PLATE
17					SEAL, Dash
	J319 6896	1			1981-86: Left Hand Drive
	J319 6896	1			1981-84: EXPORT, Right Hand Drive
	J546 1498	1			1985-86: EXPORT, Right Hand Drive
18	J420 0414	1			NUT
19	J320 8377	1			RING
20	J812 8884	1			SHAFT
21	J448 7696	1			ADAPTER
22	J448 6713	1			BEARING
23	J448 7743	1			RETAINER
24	J448 7739	1			CLIP
25	J319 4110	1			BOLT
26	J448 8431	1			NUT
27	J319 1827	1			CLAMP
28					SHAFT
	J535 3135	1			Without Power Steering
	J535 4934	1			With Power Steering
29	J813 2676	1			BOOT
30	J320 4878	1			SPRING

MODEL CODES

16=Cherokee 2 Dr.(1981-83)
17=Cherokee 2 Dr.(1981-83)
73=Cherokee 2WD-2 Dr.(1984-86)
74=Cherokee 2WD-4 Dr.(1984-86)
18=Cherokee 4 Dr.(1981-83)
77=Cherokee 4WD-2 Dr.(1984-86)
78=Cherokee 4WD-4 Dr.(1984-86)
85=CJ-5 (1981-83)
86=CJ-6(1981)
87=CJ-7(1981-86)
88=CJ-8, Scrambler(1981-86)
64=Comanche 2WD-6 Ft. Box(1986)
66=Comanche 2WD-7 Ft. Box(1986)
63=Comanche 4WD-6 Ft. Box(1986)
65=Comanche 4WD-7 Ft. Box(1986)
15=Grand Wagoneer 4 Dr.(1984-86)
25=J-10 Truck 7 Ft. Box(1981-84)
26=J10 Truck 8 Ft. Box(1981-86)
27=J-20 Truck 8 Ft. Box(1981-86)
15=Wagoneer 4 Dr.(1981-83)
75=Wagoneer 4WD-4 Dr.(1984-86)

BODY
CJ=CJ-5, CJ-6, CJ-7, CJ-8, Scrambler(1981-86)
MJ=Comanche Pickup(1986)

STYLES
SJ=Wagoneer(1981-83), Grand Wagoneer(1984-86), Cherokee(1981-83), J-10, J-20(1981-86)
XJ=Wagoneer(1984-86), Cherokee(1984-86)

AR = Use as Required - = Non Illustrated Part P.A.R. = Paint as Required

« RETURN TO GROUP INDEX »

HOUSING, STEERING COLUMN LOWER WITH FLOOR SHIFT, WITHOUT TILT WHEEL CJ-5,6,7,8, SCRAMBLER
Figure 19-1100

81J19 1100

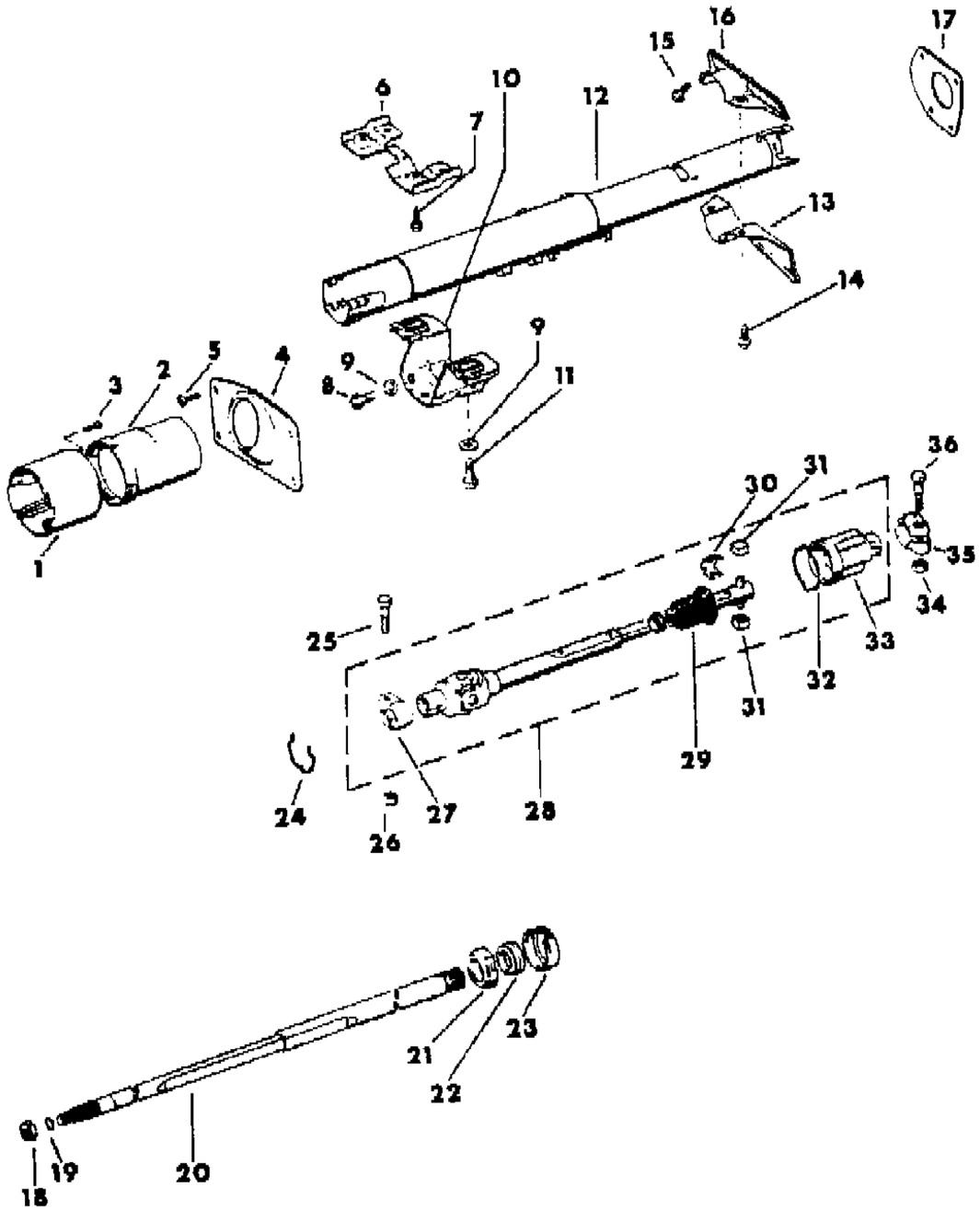

ITEM	PART NUMBER	QTY	BODY	MODEL	DESCRIPTION
31	J320 4875	2			BEARING
32	J448 6679	1			RING
33					COUPLING
	J812 1299	1			Without Power Steering
	J099 8710	1			With Power Steering
34					NUT
	J400 5653	1			Without Power Steering
	J941 1783	1			With Power Steering
35					CLAMP
	J099 4520	1			Without Power Steering
	J099 4605	1			With Power Steering
36					BOLT
	J319 4110	1			Without Power Steering
	J099 4603	1			With Power Steering

MODEL CODES

16=Cherokee 2 Dr.(1981-83)
17=Cherokee 2 Dr.(1981-83)
73=Cherokee 2WD-2 Dr.(1984-86)
74=Cherokee 2WD-4 Dr.(1984-86)
18=Cherokee 4 Dr.(1981-83)
77=Cherokee 4WD-2 Dr.(1984-86)
78=Cherokee 4WD-4 Dr.(1984-86)
85=CJ-5 (1981-83)
86=CJ-6(1981)
87=CJ-7(1981-86)
88=CJ-8, Scrambler(1981-86)
64=Comanche 2WD-6 Ft. Box(1986)
66=Comanche 2WD-7 Ft. Box(1986)
63=Comanche 4WD-6 Ft. Box(1986)
65=Comanche 4WD-7 Ft. Box(1986)
15=Grand Wagoneer 4 Dr.(1984-86)
25=J-10 Truck 7 Ft. Box(1981-84)
26=J10 Truck 8 Ft. Box(1981-86)
27=J-20 Truck 8 Ft. Box(1981-86)
15=Wagoneer 4 Dr.(1981-83)
75=Wagoneer 4WD-4 Dr.(1984-86)

BODY
CJ=CJ-5, CJ-6, CJ-7, CJ-8, Scrambler(1981-86)
MJ=Comanche Pickup(1986)

STYLES
SJ=Wagoneer(1981-83), Grand Wagoneer(1984-86), Cherokee(1981-83), J-10, J-20(1981-86)
XJ=Wagoneer(1984-86), Cherokee(1984-86)

AR = Use as Required - = Non Illustrated Part P.A.R. = Paint as Required

« RETURN TO GROUP INDEX

HOUSING, STEERING COLUMN UPPER WITH FLOOR GEAR SHIFT, WITH TILT WHEEL CJ-5,6,7,8, SCRAMBLER
Figure 19-1200

81J19 1200 A

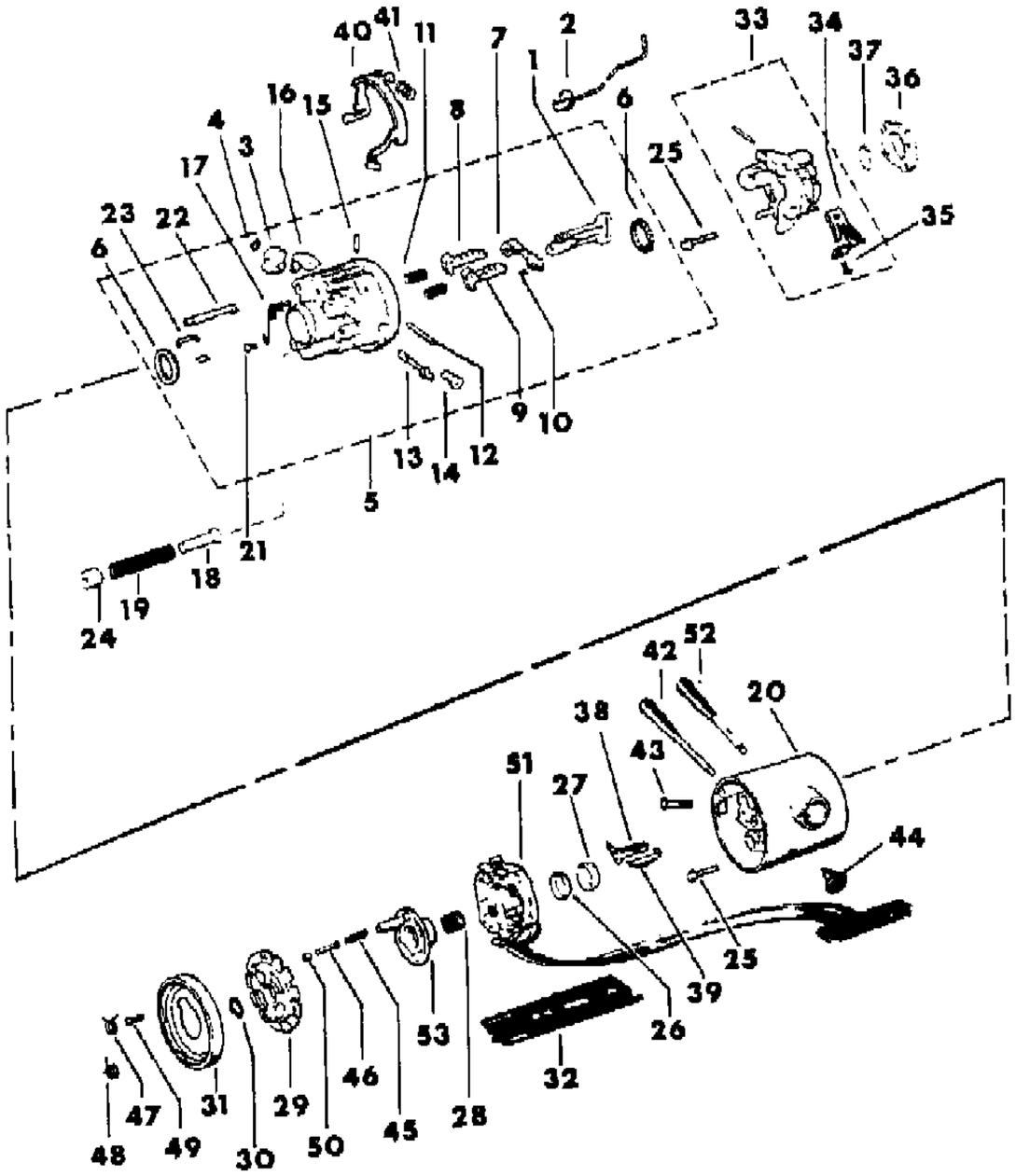

ITEM	PART NUMBER	QTY	BODY	MODEL	DESCRIPTION
1	J812 7870	1			RACK
2	J812 8148	1			ACTUATOR ASSEMBLY, Ignition Switch ***
3	J812 7859	1			SECTOR
4	J448 7824	1			RING, Retaining
5					HOUSING ASSEMBLY
					Left Hand Drive
	J812 8159	1			1981-83
	8350 1106	1			1984-86
					EXPORT, Right Hand Drive
	J813 0675	1			1981-83
	8350 1105	1			1984-86
6	J320 8362	2			BEARING ASSEMBLY
7	J448 7821	1			LEVER
8	J812 2716	1			SHOE, Left
9	J448 7828	1			SHOE, Right
10	J320 8047	1			SPRING
11	J448 7832	1			SPRING
12	J448 7822	1			PIN
13	J448 8213	1			SHAFT
14	J448 8418	2			PIN, Pivot
15	J320 8043	1			PIN
16	J448 7869	1			SHIELD
17	J448 7830	1			SPRING
18	J448 7854	1			GUIDE
19	J812 0252	1			SPRING
20					COVER, Lock Housing
	J448 7875	1			1981-84
	8350 2127	1			1985-86
21	J448 7827	1			SCREW
22	J448 7819	1			BOLT
23	J448 7831	1			SPRING
24	J320 8143	1			RETAINER
25	J448 7867	4			SCREW
26	J448 7862	1			RACE
27	J812 2484	1			SEAT
28	J812 2485	1			SPRING
29					PLATE, Steering Wheel Lock
	J812 7874	1			Left Hand Drive
	J325 1125	1			EXPORT, Right Hand Drive

MODEL CODES
16=Cherokee 2 Dr.(1981-83)
17=Cherokee 2 Dr.(1981-83)
73=Cherokee 2WD-2 Dr.(1984-86)
74=Cherokee 2WD-4 Dr.(1984-86)
18=Cherokee 4 Dr.(1981-83)
77=Cherokee 4WD-2 Dr.(1984-86)
78=Cherokee 4WD-4 Dr.(1984-86)
85=CJ-5 (1981-83)
86=CJ-6(1981)
87=CJ-7(1981-86)
88=CJ-8, Scrambler(1981-86)
64=Comanche 2WD-6 Ft. Box(1986)
66=Comanche 2WD-7 Ft. Box(1986)
63=Comanche 4WD-6 Ft. Box(1986)
65=Comanche 4WD-7 Ft. Box(1986)
15=Grand Wagoneer 4 Dr.(1984-86)
25=J-10 Truck 7 Ft. Box(1981-84)
26=J10 Truck 8 Ft. Box(1981-86)
27=J-20 Truck 8 Ft. Box(1981-86)
15=Wagoneer 4 Dr.(1981-83)
75=Wagoneer 4WD-4 Dr.(1984-86)

BODY
CJ=CJ-5, CJ-6, CJ-7, CJ-8, Scrambler(1981-86)
MJ=Comanche Pickup(1986)

STYLES
SJ=Wagoneer(1981-83), Grand Wagoneer(1984-86), Cherokee(1981-83), J-10, J-20(1981-86)
XJ=Wagoneer(1984-86), Cherokee(1984-86)

AR = Use as Required - = Non Illustrated Part P.A.R. = Paint as Required

« RETURN TO GROUP INDEX »

HOUSING, STEERING COLUMN UPPER WITH FLOOR GEAR SHIFT, WITH TILT WHEEL CJ-5,6,7,8, SCRAMBLER
Figure 19-1200

81J19 1200 A

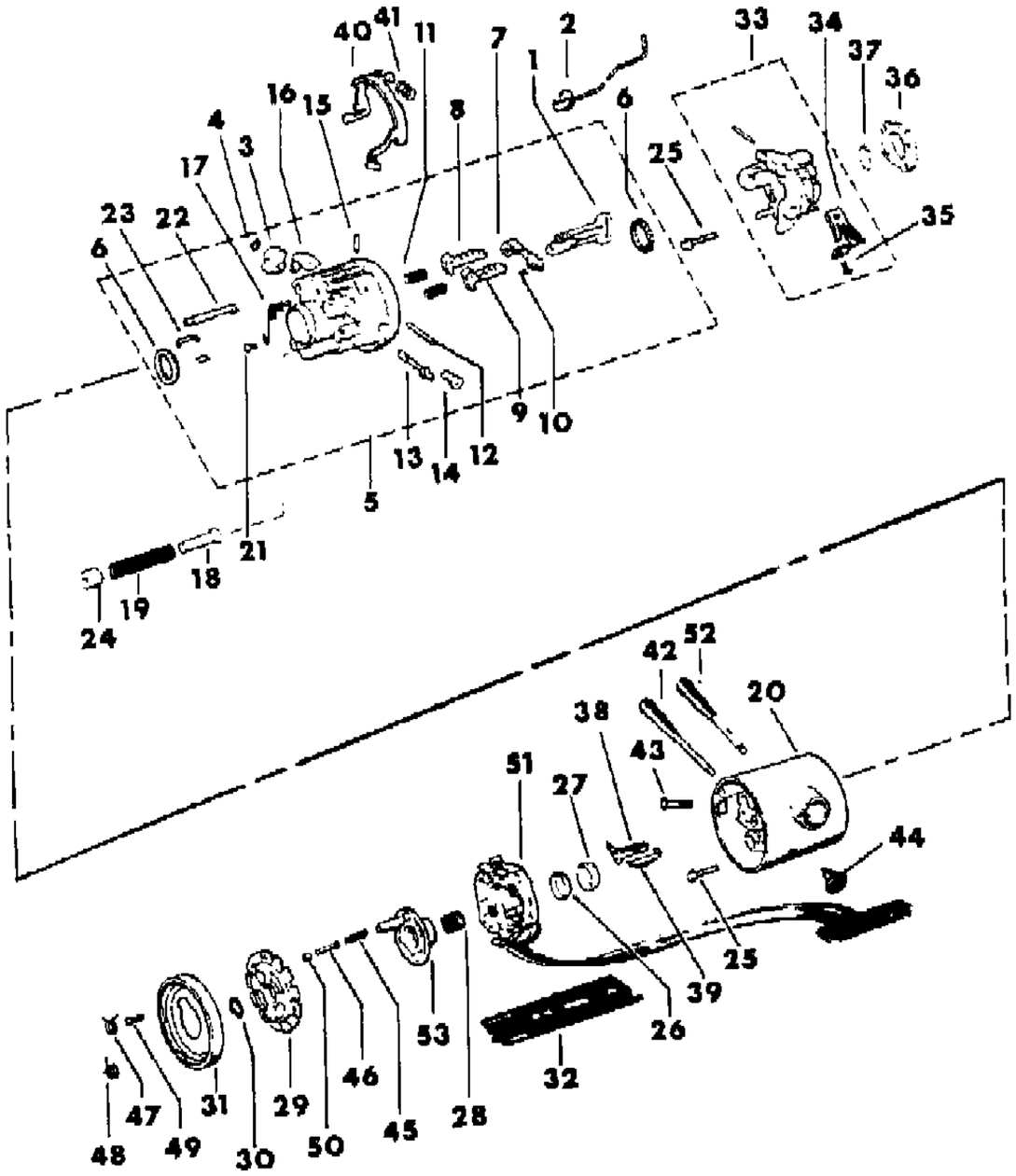

ITEM	PART NUMBER	QTY	BODY	MODEL	DESCRIPTION
30	J320 8377	1			RING
31	J322 8743	1			COVER
32	J812 2486	1			PROTECTOR
33					SUPPORT ASSEMBLY
	J812 8152	1			1981-83
	8350 1111	1			1984-86
34	J812 8153	1			PLATE
35	J320 8210	2			SCREW
36	J448 7860	1			PLATE
37	J448 7864	1			RING
38	J321 1424	1			SWITCH ASSEMBLY
39	J448 7853	1			CLIP
40	J812 8154	1			LEVER
41	J812 8156	1			SPRING
42					LEVER, Turn Signal
	J323 7116	1			With Cruise Control
	J536 2173	1			Without Cruise Control
43	J448 8318	1			SCREW
44	J323 8343	1			KNOB, Hazard Lights
45	J318 7255	1			SPRING
46	J318 7249	1			PIN
47	J812 9335	1			SPRING, Right Upper
48	J812 9317	1			SPRING, Left Lower
49	J448 8301	3			SCREW
50	J318 7257	1			RETAINER
51	5600 2011	1			SWITCH, Turn Signal
52	J323 9880	1			LEVER
53	J448 7816	1			CAM, Cancelling

MODEL CODES

16=Cherokee 2 Dr.(1981-83)
17=Cherokee 2 Dr.(1981-83)
73=Cherokee 2WD-2 Dr.(1984-86)
74=Cherokee 2WD-4 Dr.(1984-86)
18=Cherokee 4 Dr.(1981-83)
77=Cherokee 4WD-2 Dr.(1984-86)
78=Cherokee 4WD-4 Dr.(1984-86)
85=CJ-5 (1981-83)
86=CJ-6(1981)
87=CJ-7(1981-86)
88=CJ-8, Scrambler(1981-86)
64=Comanche 2WD-6 Ft. Box(1986)
66=Comanche 2WD-7 Ft. Box(1986)
63=Comanche 4WD-6 Ft. Box(1986)
65=Comanche 4WD-7 Ft. Box(1986)
15=Grand Wagoneer 4 Dr.(1984-86)
25=J-10 Truck 7 Ft. Box(1981-84)
26=J10 Truck 8 Ft. Box(1981-86)
27=J-20 Truck 8 Ft. Box(1981-86)
15=Wagoneer 4 Dr.(1981-83)
75=Wagoneer 4WD-4 Dr.(1984-86)

BODY
CJ=CJ-5, CJ-6, CJ-7, CJ-8, Scrambler(1981-86)
MJ=Comanche Pickup(1986)

STYLES
SJ=Wagoneer(1981-83), Grand Wagoneer(1984-86), Cherokee(1981-83), J-10, J-20(1981-86)
XJ=Wagoneer(1984-86), Cherokee(1984-86)

AR = Use as Required - = Non Illustrated Part P.A.R. = Paint as Required

« RETURN TO GROUP INDEX

HOUSING, STEERING COLUMN LOWER WITH FLOOR SHIFT, WITH TILT WHEEL CJ-5,6,7,8, SCRAMBLER
Figure 19-1300

81J19 1300

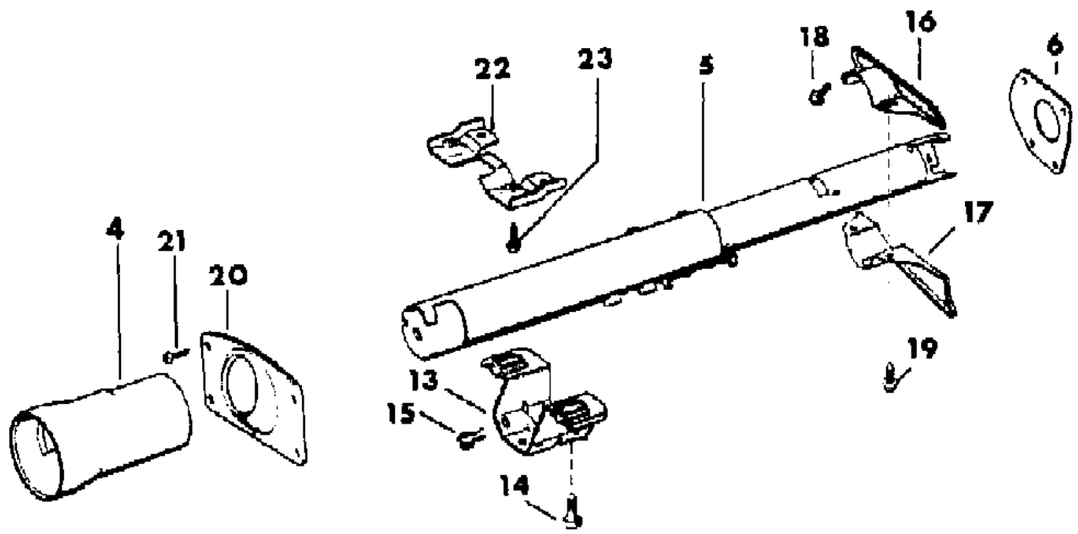

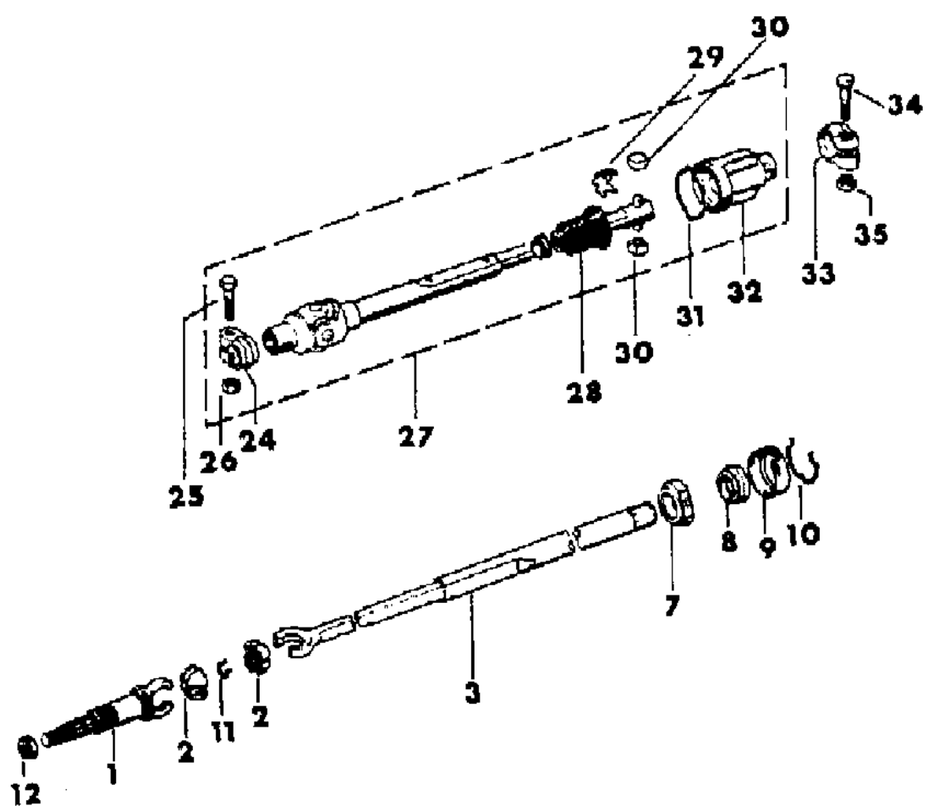

ITEM	PART NUMBER	QTY	BODY	MODEL	DESCRIPTION
1	J812 8888	1			SHAFT, Steering Column Upper
2	J448 7842	2			SPHERE
3	J812 8887	1			SHAFT, Intermediate
4	J812 8155	1			SHROUD
5	J813 0179	1			JACKET ASSEMBLY
6					SEAL, Dash
	J319 6896	1			Left Hand Drive
	J546 1498	1			EXPORT, Right Hand Drive
7	J448 7696	1			ADAPTER
8	J448 6713	1			BEARING
9	J448 7743	1			RETAINER
10	J448 7739	1			CLIP
11	J448 7843	1			SPRING
12	J420 0414	1			NUT
13					BRACKET
	J319 5280	1			With Manual Transmission
					With Automatic Transmission
	J535 1229	1			Left Hand Drive
	J319 5280	1			EXPORT, Right Hand Drive
14	1150 2764	2			SCREW
15	S941 8778	2			SCREW
16	J319 6870	1			PLATE, Upper
17	J319 6897	1			PLATE, Lower
18	J400 4520	1			BOLT, 1.5" Long
19	J027 3573	1			BOLT, .62" Long
20	J535 4777	1			BEZEL
21	J999 8220	1			SCREW
22	J535 5544	1			ADAPTER
23	J400 5665	2			BOLT
24	J319 1827	1			CLAMP
25	J319 4110	1			BOLT
26	J448 8431	1			NUT
27					SHAFT ASSEMBLY, Steering Column Lower
	J535 4934	1			With Power Steering
	J535 3135	1			Without Power Steering
28	J813 2676	1			SEAL
29	J320 4878	1			SPRING
30	J320 4875	2			BEARING
31	J448 6679	1			RING

MODEL CODES

16=Cherokee 2 Dr.(1981-83)
17=Cherokee 2 Dr.(1981-83)
73=Cherokee 2WD-2 Dr.(1984-86)
74=Cherokee 2WD-4 Dr.(1984-86)
18=Cherokee 4 Dr.(1981-83)
77=Cherokee 4WD-2 Dr.(1984-86)
78=Cherokee 4WD-4 Dr.(1984-86)
85=CJ-5 (1981-83)
86=CJ-6(1981)
87=CJ-7(1981-86)
88=CJ-8, Scrambler(1981-86)
64=Comanche 2WD-6 Ft. Box(1986)
66=Comanche 2WD-7 Ft. Box(1986)
63=Comanche 4WD-6 Ft. Box(1986)
65=Comanche 4WD-7 Ft. Box(1986)
15=Grand Wagoneer 4 Dr.(1984-86)
25=J-10 Truck 7 Ft. Box(1981-84)
26=J10 Truck 8 Ft. Box(1981-86)
27=J-20 Truck 8 Ft. Box(1981-86)
15=Wagoneer 4 Dr.(1981-83)
75=Wagoneer 4WD-4 Dr.(1984-86)

BODY
CJ=CJ-5, CJ-6, CJ-7, CJ-8, Scrambler(1981-86)
MJ=Comanche Pickup(1986)

STYLES
SJ=Wagoneer(1981-83), Grand Wagoneer(1984-86), Cherokee(1981-83), J-10, J-20(1981-86)
XJ=Wagoneer(1984-86), Cherokee(1984-86)

AR = Use as Required - = Non Illustrated Part P.A.R. = Paint as Required

HOUSING, STEERING COLUMN LOWER WITH FLOOR SHIFT, WITH TILT WHEEL CJ-5,6,7,8, SCRAMBLER
Figure 19-1300

81J19 1300

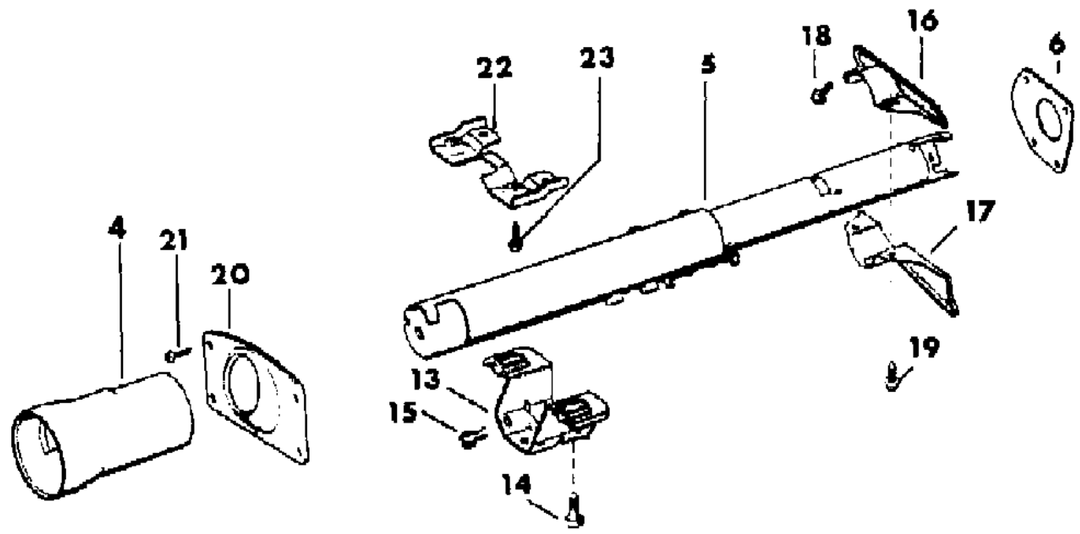

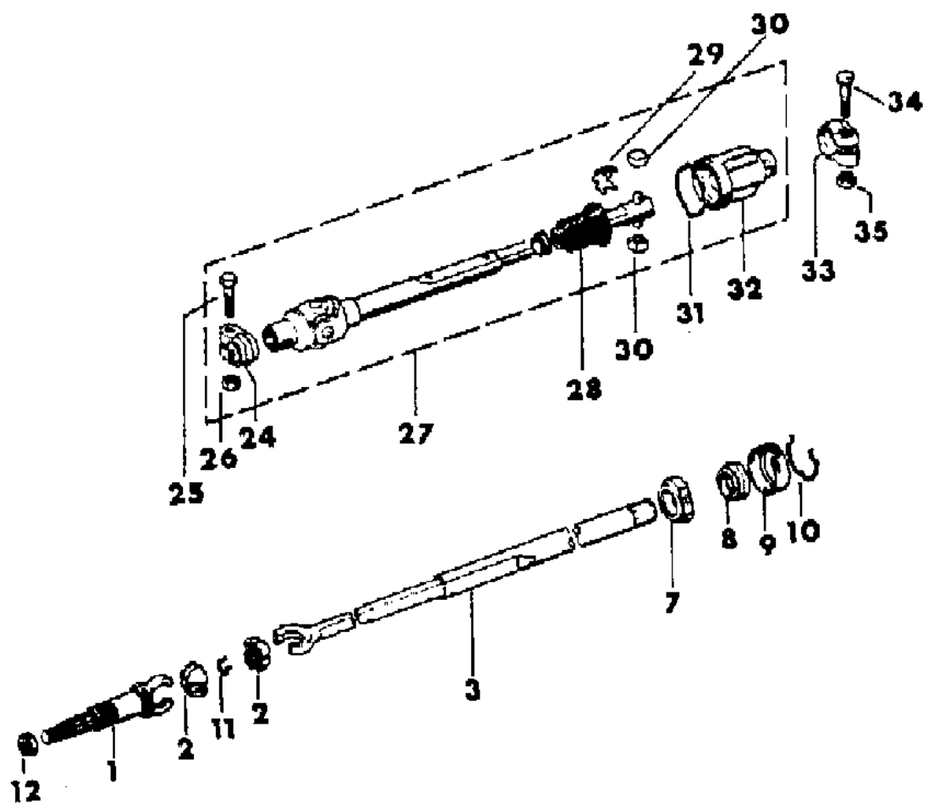

ITEM	PART NUMBER	QTY	BODY	MODEL	DESCRIPTION
32					COUPLING
	J812 1299	1			Without Power Steering
	J099 8710	1			With Power Steering
33					CLAMP
	J099 4520	1			Without Power Steering
	J099 4605	1			With Power Steering
34					BOLT
	J319 4110	1			Without Power Steering
	J099 4603	1			With Power Steering
35					NUT
	J400 5653	1			Without Power Steering
	J941 1783	1			With Power Steering

MODEL CODES

16=Cherokee 2 Dr.(1981-83)
17=Cherokee 2 Dr.(1981-83)
73=Cherokee 2WD-2 Dr.(1984-86)
74=Cherokee 2WD-4 Dr.(1984-86)
18=Cherokee 4 Dr.(1981-83)
77=Cherokee 4WD-2 Dr.(1984-86)
78=Cherokee 4WD-4 Dr.(1984-86)
85=CJ-5 (1981-83)
86=CJ-6(1981)
87=CJ-7(1981-86)
88=CJ-8, Scrambler(1981-86)
64=Comanche 2WD-6 Ft. Box(1986)
66=Comanche 2WD-7 Ft. Box(1986)
63=Comanche 4WD-6 Ft. Box(1986)
65=Comanche 4WD-7 Ft. Box(1986)
15=Grand Wagoneer 4 Dr.(1984-86)
25=J-10 Truck 7 Ft. Box(1981-84)
26=J10 Truck 8 Ft. Box(1981-86)
27=J-20 Truck 8 Ft. Box(1981-86)
15=Wagoneer 4 Dr.(1981-83)
75=Wagoneer 4WD-4 Dr.(1984-86)

BODY
CJ=CJ-5, CJ-6, CJ-7, CJ-8, Scrambler(1981-86)
MJ=Comanche Pickup(1986)

STYLES
SJ=Wagoneer(1981-83), Grand Wagoneer(1984-86), Cherokee(1981-83), J-10, J-20(1981-86)
XJ=Wagoneer(1984-86), Cherokee(1984-86)

AR = Use as Required - = Non Illustrated Part P.A.R. = Paint as Required

HOUSING, STEERING COLUMN, UPPER WITH COLUMN SHIFT, WITHOUT TILT WHEEL CJ-5,6,7,8, SCRAMBLER
Figure 19-1400

81J19 1400

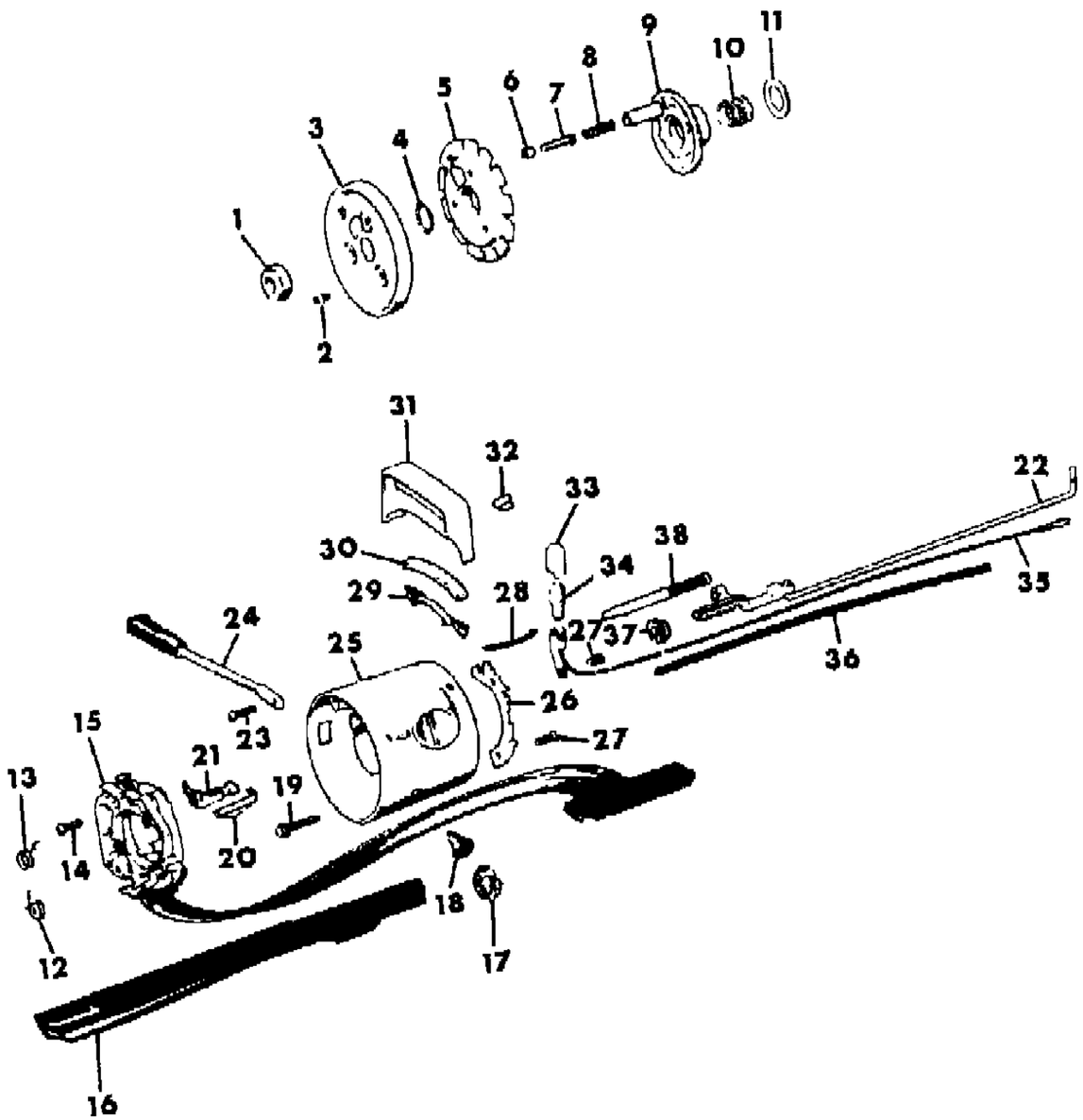

ITEM	PART NUMBER	QTY	BODY	MODEL	DESCRIPTION
1	J420 0300	1			NUT
2	J400 3949	2			SCREW
3	J322 8743	1			COVER
4	J320 8377	1			RING, Retaining
5	J812 7831	1			PLATE, Lock
6	J318 7257	1			RETAINER
7	J318 7249	1			PIN
8	J318 7255	1			SPRING
9	J448 7711	1			CAM, Cancelling
10	J448 7765	1			SPRING
11	J320 8008	1			WASHER
12	J812 9317	1			SPRING, Lower
13	J812 9335	1			SPRING, Upper
14	J448 7763	3			SCREW
15	J322 9970	1			SWITCH, Directional
16	J448 7741	1			PROTECTOR
17	J812 0097	1			SECTOR
18	J323 8343	1			KNOB
19	J448 7761	4			SCREW
20	J448 7713	1			CLIP
21	J321 1423	1			SWITCH, Buzzer
22	J448 7755	1			ROD
23	J448 8318	1			SCREW
24					LEVER, Directional Switch
					With Cruise Control
	J323 7116	1			1981: Four or Six Cylinder
	J322 6524	1			1981: Eight Cylinder
	J323 7116	1			1982-86
					Without Cruise Control
	J536 2173	1			1981-86
25	J448 9046	1			HOUSING ASSEMBLY
26	J448 7799	1			GATE, Shift Lever
27	J448 7801	2			SCREW
28	J448 7774	1			SPRING
29	J319 6505	1			BRACKET
30	J323 0056	1			SEAL
31					BEZEL, Gear Selector
	J536 2838	1			Black
	J536 2839	1			Blue

MODEL CODES

16=Cherokee 2 Dr.(1981-83)
17=Cherokee 2 Dr.(1981-83)
73=Cherokee 2WD-2 Dr.(1984-86)
74=Cherokee 2WD-4 Dr.(1984-86)
18=Cherokee 4 Dr.(1981-83)
77=Cherokee 4WD-2 Dr.(1984-86)
78=Cherokee 4WD-4 Dr.(1984-86)
85=CJ-5 (1981-83)
86=CJ-6(1981)
87=CJ-7(1981-86)
88=CJ-8, Scrambler(1981-86)
64=Comanche 2WD-6 Ft. Box(1986)
66=Comanche 2WD-7 Ft. Box(1986)
63=Comanche 4WD-6 Ft. Box(1986)
65=Comanche 4WD-7 Ft. Box(1986)
15=Grand Wagoneer 4 Dr.(1984-86)
25=J-10 Truck 7 Ft. Box(1981-84)
26=J10 Truck 8 Ft. Box(1981-86)
27=J-20 Truck 8 Ft. Box(1981-86)
15=Wagoneer 4 Dr.(1981-83)
75=Wagoneer 4WD-4 Dr.(1984-86)

BODY
CJ=CJ-5, CJ-6, CJ-7, CJ-8, Scrambler(1981-86)
MJ=Comanche Pickup(1986)

STYLES
SJ=Wagoneer(1981-83), Grand Wagoneer(1984-86), Cherokee(1981-83), J-10, J-20(1981-86)
XJ=Wagoneer(1984-86), Cherokee(1984-86)

AR = Use as Required - = Non Illustrated Part P.A.R. = Paint as Required

« RETURN TO GROUP INDEX »

HOUSING, STEERING COLUMN, UPPER WITH COLUMN SHIFT, WITHOUT TILT WHEEL CJ-5,6,7,8, SCRAMBLER
Figure 19-1400

81J19 1400

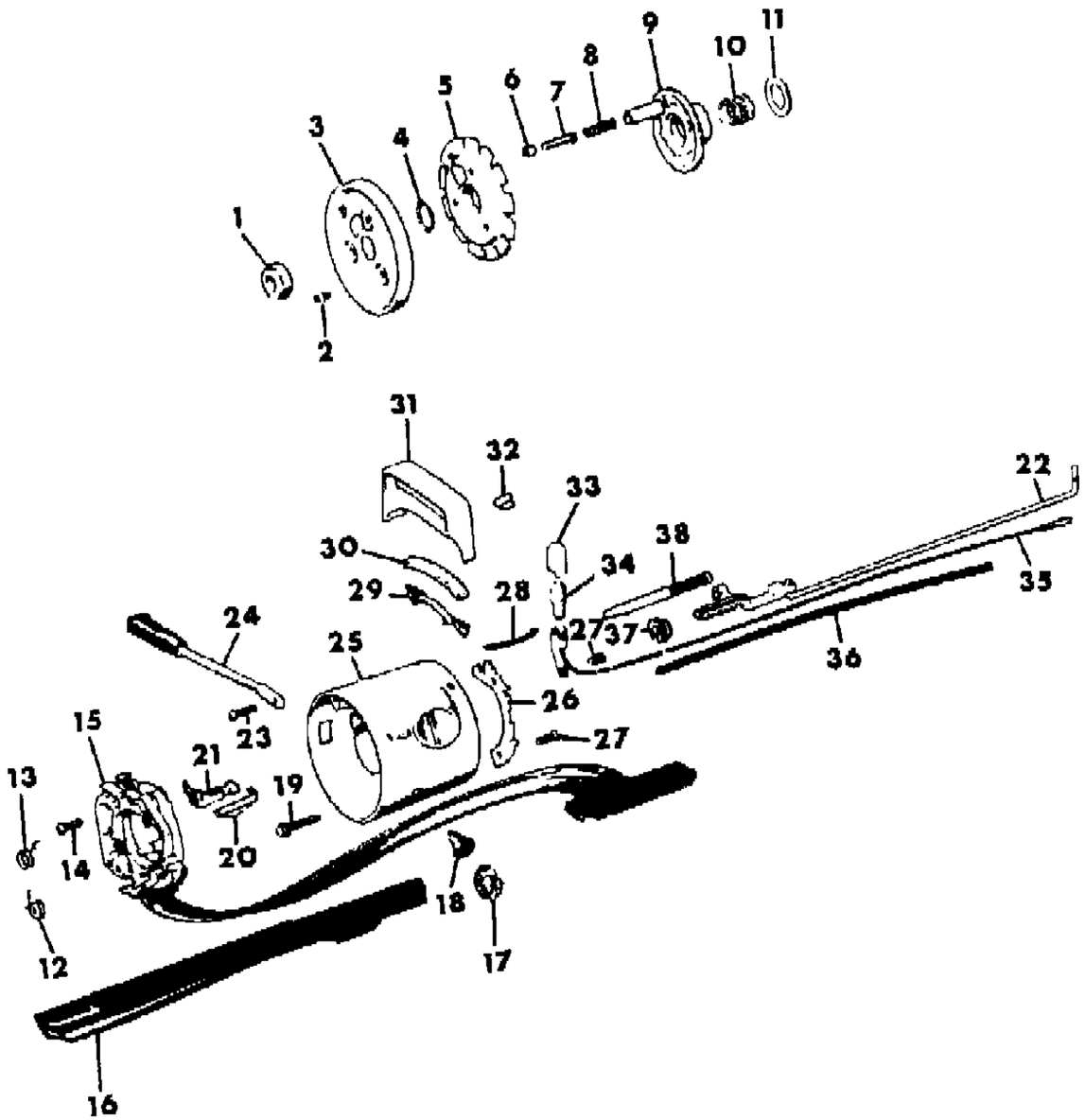

ITEM	PART NUMBER	QTY	BODY	MODEL	DESCRIPTION
	J536 2590	1			Nutmeg
	J536 2592	1			Medium Brown
32	J319 6503	1			CLIP
33	J319 6504	1			HOOD, Bulb ***
34	J345 1933	1			BULB
35	J448 7785	1			SOCKET ASSEMBLY
36	J448 7742	1			PROTECTOR
37	J448 7777	1			WASHER
38					BOLT, Locking
	J448 7897	1			
	J813 0676	1			EXPORT

MODEL CODES
16=Cherokee 2 Dr.(1981-83)
17=Cherokee 2 Dr.(1981-83)
73=Cherokee 2WD-2 Dr.(1984-86)
74=Cherokee 2WD-4 Dr.(1984-86)
18=Cherokee 4 Dr.(1981-83)
77=Cherokee 4WD-2 Dr.(1984-86)
78=Cherokee 4WD-4 Dr.(1984-86)
85=CJ-5 (1981-83)
86=CJ-6(1981)
87=CJ-7(1981-86)
88=CJ-8, Scrambler(1981-86)
64=Comanche 2WD-6 Ft. Box(1986)
66=Comanche 2WD-7 Ft. Box(1986)
63=Comanche 4WD-6 Ft. Box(1986)
65=Comanche 4WD-7 Ft. Box(1986)
15=Grand Wagoneer 4 Dr.(1984-86)
25=J-10 Truck 7 Ft. Box(1981-84)
26=J10 Truck 8 Ft. Box(1981-86)
27=J-20 Truck 8 Ft. Box(1981-86)
15=Wagoneer 4 Dr.(1981-83)
75=Wagoneer 4WD-4 Dr.(1984-86)

BODY
CJ=CJ-5, CJ-6, CJ-7, CJ-8, Scrambler(1981-86)
MJ=Comanche Pickup(1986)

STYLES
SJ=Wagoneer(1981-83), Grand Wagoneer(1984-86), Cherokee(1981-83), J-10, J-20(1981-86)
XJ=Wagoneer(1984-86), Cherokee(1984-86)

AR = Use as Required - = Non Illustrated Part P.A.R. = Paint as Required

« RETURN TO GROUP INDEX

HOUSING, STEERING COLUMN LOWER WITH COLUMN SHIFT, WITHOUT TILT WHEEL CJ-5,6,7,8, SCRAMBLER
Figure 19-1500

81J19 1500

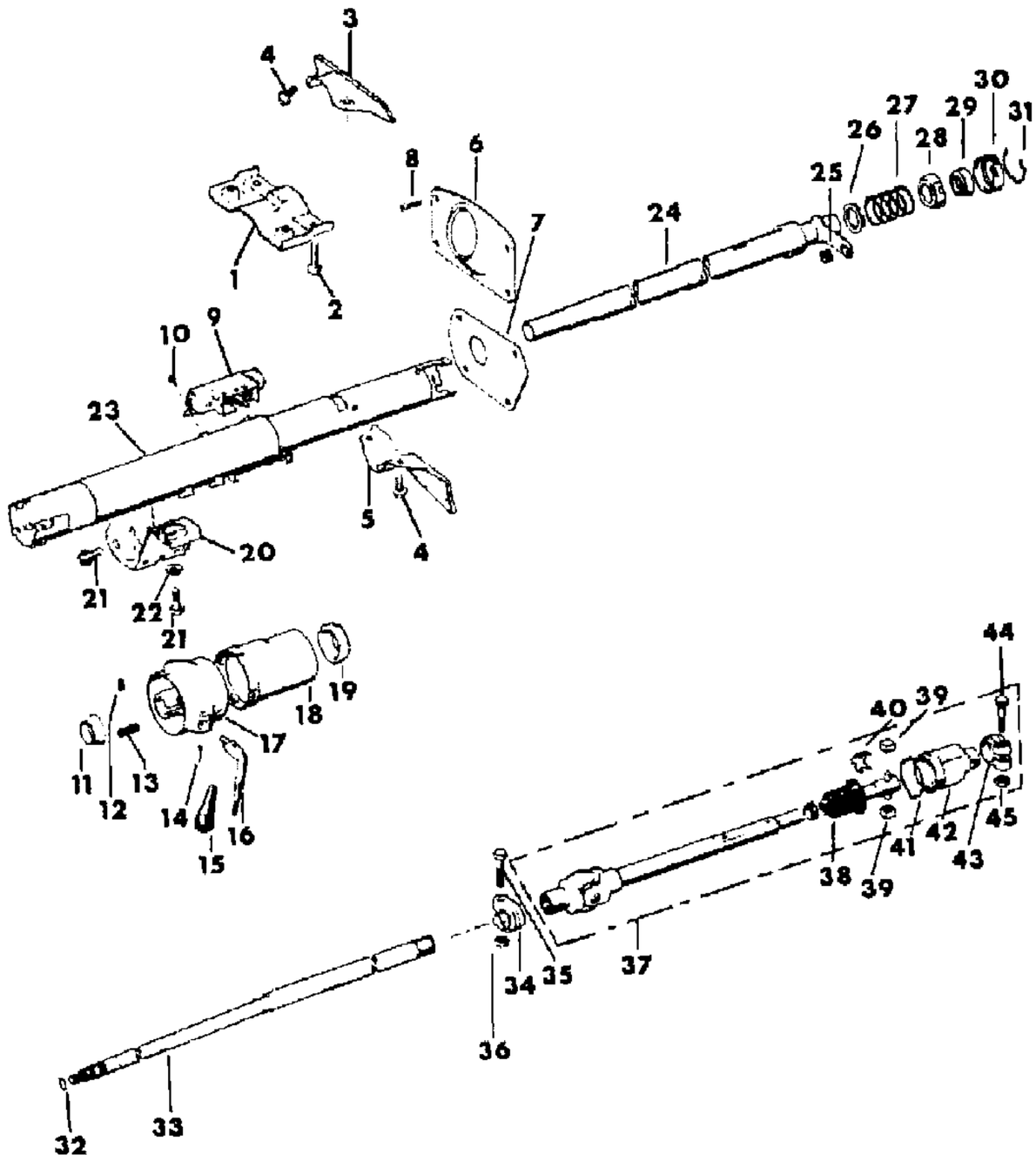

ITEM	PART NUMBER	QTY	BODY	MODEL	DESCRIPTION
1	J535 1229	1			ADAPTER
2	J400 5665	2			BOLT
3	J319 6870	1			PLATE
4	J027 3573	4			SCREW
5	J319 6897	1			PLATE
6	J535 4777	1			BEZEL
7	J319 6896	1			SEAL
8	J999 8220	4			SCREW
9	J812 8889	1			SWITCH, Ignition
10	J448 7772	2			SCREW
11	J448 7714	1			CUP
12	J321 5679	1			POINTER
13	J448 7791	1			SPRING
14	J400 3925	1			PIN
15	J321 6462	1			KNOB
16	J321 6464	1			LEVER ASSEMBLY
17	J448 9040	1			BOWL
18	J321 1169	1			SHROUD
19	J448 7716	1			BEARING
20	J535 1229	1			BRACKET
21	1150 2764	4			BOLT
22	J012 0388	4			WASHER
23	J813 0175	1			JACKET ASSEMBLY
24	J448 9041	1			TUBE ASSEMBLY
25	J319 4672	1			GROMMET
26	J448 7779	1			WASHER
27	J448 9045	1			SPRING
28	J448 7696	1			ADAPTER
29	J448 6713	1			BEARING
30	J448 7743	1			RETAINER
31	J448 7739	1			CLIP
32	J320 8377	1			RING, Snap
33	J812 8894	1			SHAFT ASSEMBLY, Column
34	J319 1827	1			CLAMP
35	J319 4110	1			BOLT
36	J448 8431	1			NUT
37					SHAFT ASSEMBLY, Lower
	J535 4934	1			With Power Steering
	J535 3135	1			Without Power Steering

MODEL CODES

16=Cherokee 2 Dr.(1981-83)
17=Cherokee 2 Dr.(1981-83)
73=Cherokee 2WD-2 Dr.(1984-86)
74=Cherokee 2WD-4 Dr.(1984-86)
18=Cherokee 4 Dr.(1981-83)
77=Cherokee 4WD-2 Dr.(1984-86)
78=Cherokee 4WD-4 Dr.(1984-86)
85=CJ-5 (1981-83)
86=CJ-6(1981)
87=CJ-7(1981-86)
88=CJ-8, Scrambler(1981-86)
64=Comanche 2WD-6 Ft. Box(1986)
66=Comanche 2WD-7 Ft. Box(1986)
63=Comanche 4WD-6 Ft. Box(1986)
65=Comanche 4WD-7 Ft. Box(1986)
15=Grand Wagoneer 4 Dr.(1984-86)
25=J-10 Truck 7 Ft. Box(1981-84)
26=J10 Truck 8 Ft. Box(1981-86)
27=J-20 Truck 8 Ft. Box(1981-86)
15=Wagoneer 4 Dr.(1981-83)
75=Wagoneer 4WD-4 Dr.(1984-86)

BODY
CJ=CJ-5, CJ-6, CJ-7, CJ-8, Scrambler(1981-86)
MJ=Comanche Pickup(1986)

STYLES
SJ=Wagoneer(1981-83), Grand Wagoneer(1984-86), Cherokee(1981-83), J-10, J-20(1981-86)
XJ=Wagoneer(1984-86), Cherokee(1984-86)

AR = Use as Required - = Non Illustrated Part P.A.R. = Paint as Required

« RETURN TO GROUP INDEX »

HOUSING, STEERING COLUMN LOWER WITH COLUMN SHIFT, WITHOUT TILT WHEEL CJ-5,6,7,8, SCRAMBLER
Figure 19-1500

81J19 1500

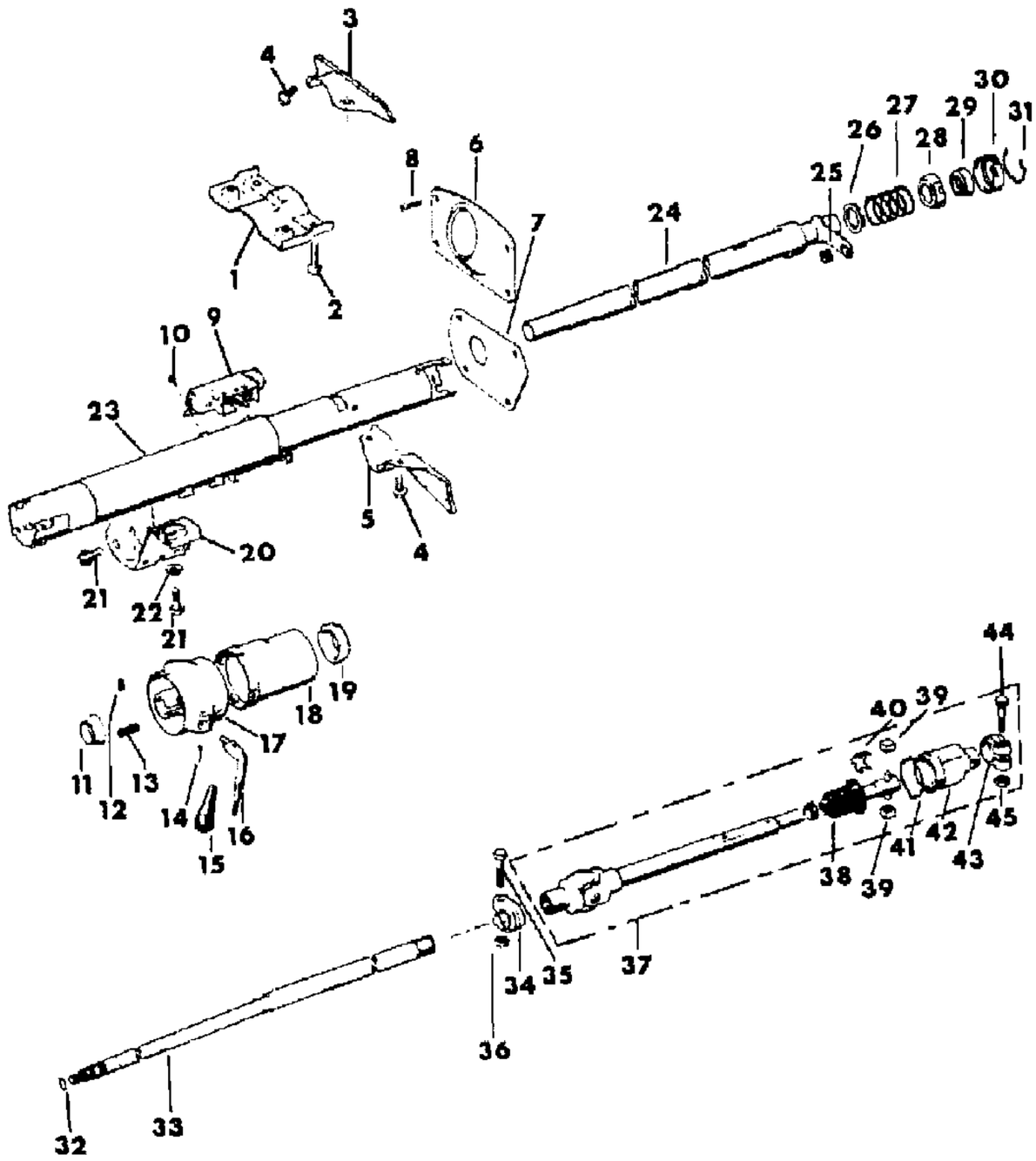

ITEM	PART NUMBER	QTY	BODY	MODEL	DESCRIPTION
38	J813 2676	1			BOOT
39	J320 4875	2			BEARING
40	J320 4878	1			SPRING
41	J448 6679	1			RING, Retaining
42					COUPLING, Lower Shaft
	J099 8710	1			With Power Steering
	J812 1299	1			Without Power Steering
43					CLAMP
	J099 4605	1			With Power Steering
	J099 4520	1			Without Power Steering
44					BOLT
	J099 4603	1			With Power Steering
	J319 4110	1			Without Power Steering
45					NUT
	J941 1783	1			With Power Steering
	J400 5653	1			Without Power Steering

MODEL CODES

16=Cherokee 2 Dr.(1981-83)
17=Cherokee 2 Dr.(1981-83)
73=Cherokee 2WD-2 Dr.(1984-86)
74=Cherokee 2WD-4 Dr.(1984-86)
18=Cherokee 4 Dr.(1981-83)
77=Cherokee 4WD-2 Dr.(1984-86)
78=Cherokee 4WD-4 Dr.(1984-86)
85=CJ-5 (1981-83)
86=CJ-6(1981)
87=CJ-7(1981-86)
88=CJ-8, Scrambler(1981-86)
64=Comanche 2WD-6 Ft. Box(1986)
66=Comanche 2WD-7 Ft. Box(1986)
63=Comanche 4WD-6 Ft. Box(1986)
65=Comanche 4WD-7 Ft. Box(1986)
15=Grand Wagoneer 4 Dr.(1984-86)
25=J-10 Truck 7 Ft. Box(1981-84)
26=J10 Truck 8 Ft. Box(1981-86)
27=J-20 Truck 8 Ft. Box(1981-86)
15=Wagoneer 4 Dr.(1981-83)
75=Wagoneer 4WD-4 Dr.(1984-86)

BODY
CJ=CJ-5, CJ-6, CJ-7, CJ-8, Scrambler(1981-86)
MJ=Comanche Pickup(1986)

STYLES
SJ=Wagoneer(1981-83), Grand Wagoneer(1984-86), Cherokee(1981-83), J-10, J-20(1981-86)
XJ=Wagoneer(1984-86), Cherokee(1984-86)

AR = Use as Required - = Non Illustrated Part P.A.R. = Paint as Required

« RETURN TO GROUP INDEX

HOUSING, STEERING COLUMN UPPER WITH COLUMN SHIFT, WITH TILT WHEEL CJ-5,6,7,8, SCRAMBLER
Figure 19-1600

81J19 1600

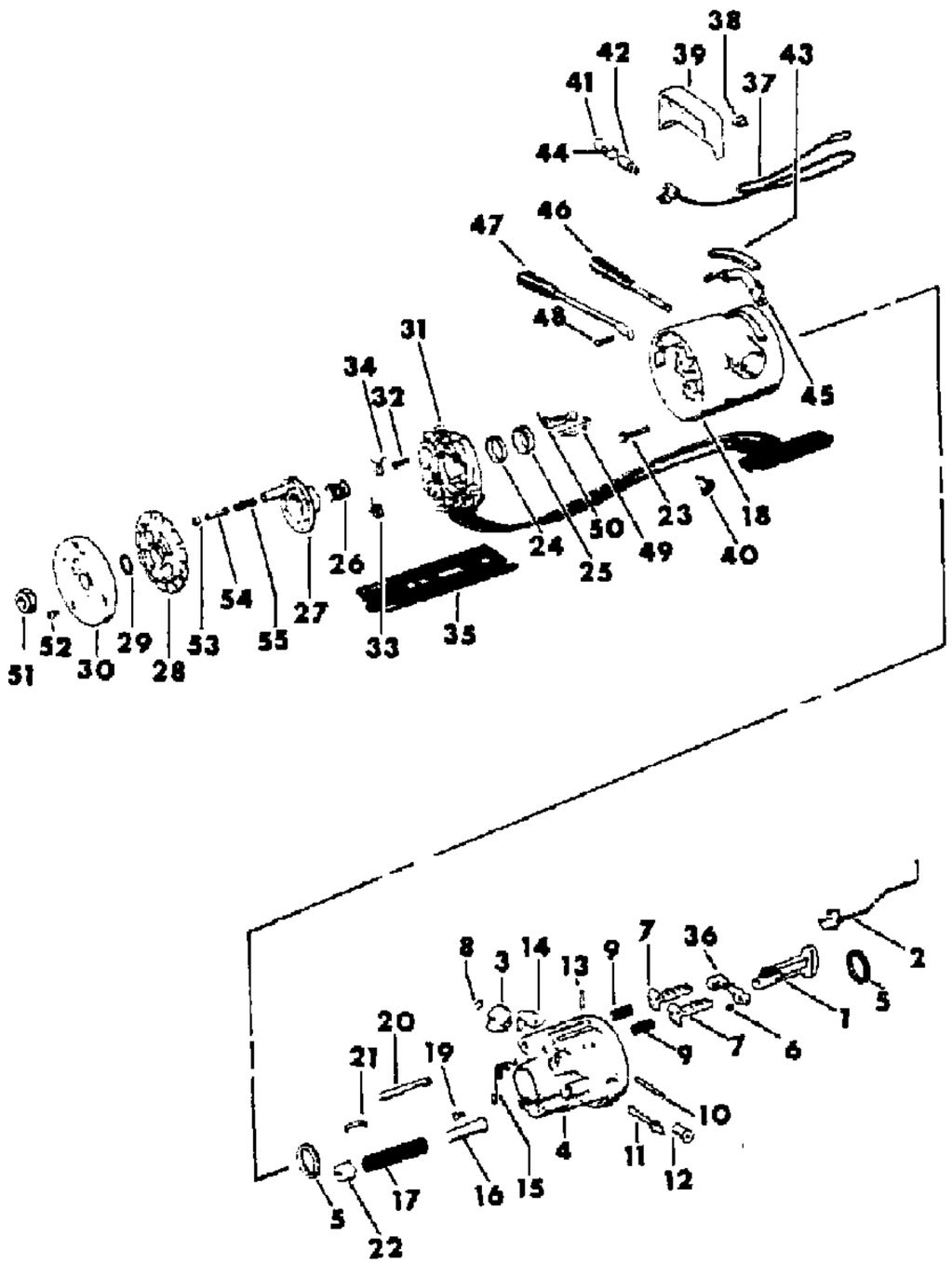

ITEM	PART NUMBER	QTY	BODY	MODEL	DESCRIPTION
1	J812 7870	1			RACK
2	J812 6162	1			ACTUATOR
3	J812 7859	1			SECTOR
4					HOUSING ASSEMBLY, Tilt Wheel
	J812 6158	1			1981-83
	8350 1114	1			1984-86
					EXPORT
	J813 0719	1			1981-83
	8350 1108	1			1984-86
5	J320 8362	2			BEARING
6	J320 8047	1			SPRING
7					SHOE
	J448 7828	1			Right
	J812 2716	1			Left
8	J448 7824	1			RING, Snap
9	J448 7832	2			SPRING, Shoe
10	J448 7822	1			PIN
11	J448 8213	1			SHAFT
12	J448 8418	2			PIN, Pivot
13	J320 8043	1			PIN, Release Lever
14	J448 7869	1			SHIELD
15	J448 7830	1			SPRING
16	J448 7854	1			GUIDE
17	J812 0252	1			SPRING, Wheel Tilt
18	J448 7850	1			COVER
19	J448 7827	1			SCREW
20					BOLT
	J448 7819	1			
	J325 1124	1			EXPORT
21	J448 7831	1			SPRING
22	J320 8143	1			RETAINER
23	J448 7867	4			SCREW
24	J448 7862	1			RACE
25	J812 2484	1			SEAT
26	J812 2485	1			SPRING
27	J448 7816	1			CAM, Cancelling
28					PLATE, Lock
	J812 7874	1			
	J325 1125	1			EXPORT

MODEL CODES

16=Cherokee 2 Dr.(1981-83)
17=Cherokee 2 Dr.(1981-83)
73=Cherokee 2WD-2 Dr.(1984-86)
74=Cherokee 2WD-4 Dr.(1984-86)
18=Cherokee 4 Dr.(1981-83)
77=Cherokee 4WD-2 Dr.(1984-86)
78=Cherokee 4WD-4 Dr.(1984-86)
85=CJ-5 (1981-83)
86=CJ-6(1981)
87=CJ-7(1981-86)
88=CJ-8, Scrambler(1981-86)
64=Comanche 2WD-6 Ft. Box(1986)
66=Comanche 2WD-7 Ft. Box(1986)
63=Comanche 4WD-6 Ft. Box(1986)
65=Comanche 4WD-7 Ft. Box(1986)
15=Grand Wagoneer 4 Dr.(1984-86)
25=J-10 Truck 7 Ft. Box(1981-84)
26=J10 Truck 8 Ft. Box(1981-86)
27=J-20 Truck 8 Ft. Box(1981-86)
15=Wagoneer 4 Dr.(1981-83)
75=Wagoneer 4WD-4 Dr.(1984-86)

BODY
CJ=CJ-5, CJ-6, CJ-7, CJ-8, Scrambler(1981-86)
MJ=Comanche Pickup(1986)

STYLES
SJ=Wagoneer(1981-83), Grand Wagoneer(1984-86), Cherokee(1981-83), J-10, J-20(1981-86)
XJ=Wagoneer(1984-86), Cherokee(1984-86)

AR = Use as Required - = Non Illustrated Part P.A.R. = Paint as Required

HOUSING, STEERING COLUMN UPPER WITH COLUMN SHIFT, WITH TILT WHEEL CJ-5,6,7,8, SCRAMBLER
Figure 19-1600

81J19 1600

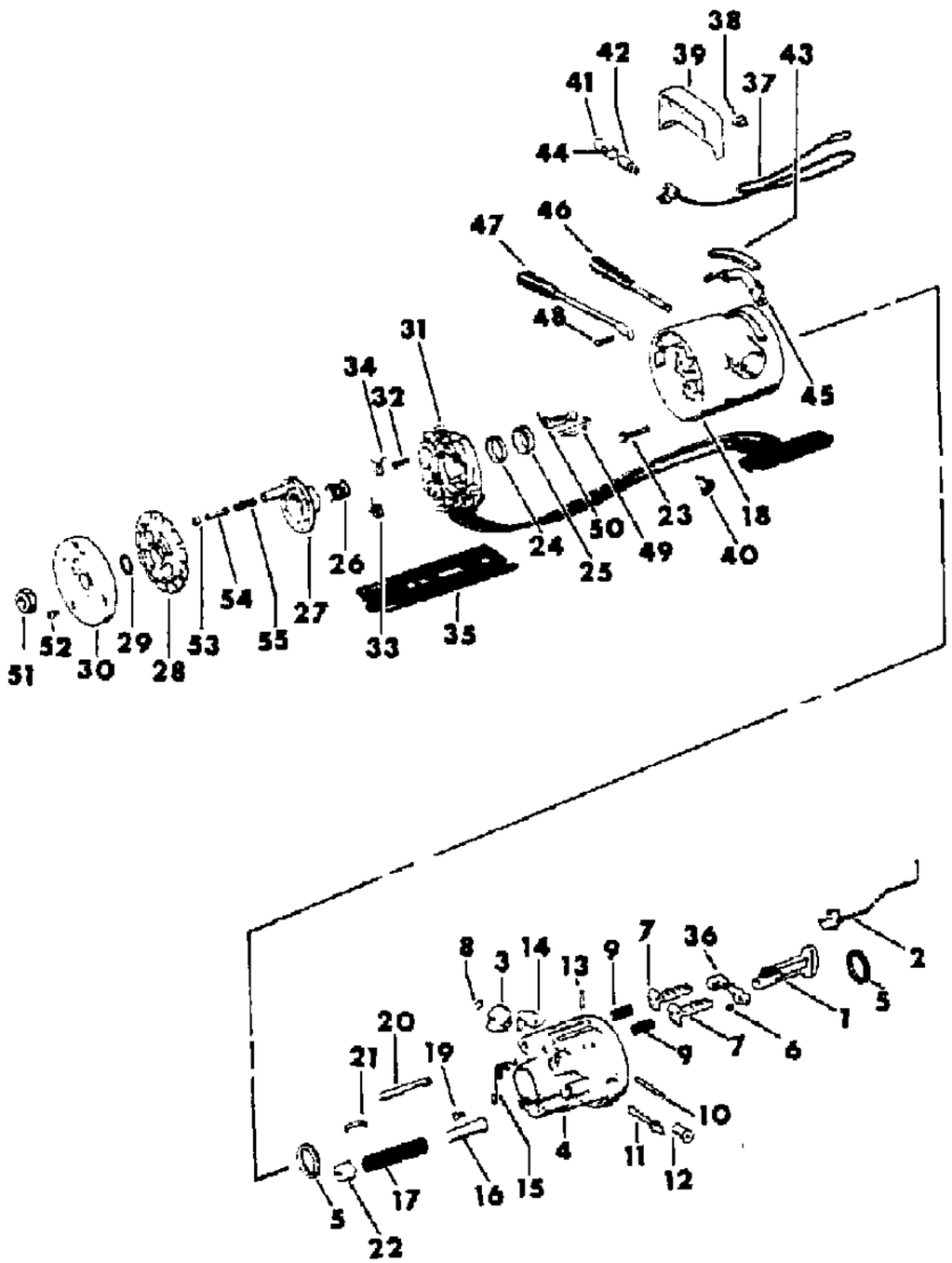

ITEM	PART NUMBER	QTY	BODY	MODEL	DESCRIPTION
29	J320 8377	1			RING, Snap
30	J322 8743	1			COVER
31	J322 9970	1			SWITCH, Directional
32	J448 8301	3			SCREW
33	J812 9317	1			SPRING, Lower
34	J812 9335	1			SPRING, Upper
35	J812 2486	1			PROTECTOR
36	J448 7821	1			LEVER, Shoe
37	J448 7846	1			SOCKET ASSEMBLY
38	J319 6686	1			SPRING
39					BEZEL, Gear Selector
	J536 2840	1			Black
	J536 2841	1			Blue
	J536 2594	1			Nutmeg
	J536 2596	1			Medium Brown
40	J323 8343	1			KNOB, Hazard Lights
41	J319 6687	1			HOOD ***
42	J320 4553	1			BULB
43	J323 0056	1			SEAL
44	J535 5991	1			FILTER
45	J448 7852	1			BRACKET
46	J318 6523	1			LEVER, Tilt Release
47					LEVER, Directional
					With Cruise Control
	J323 7116	1			1981: Four or Six Cylinder
	J322 6524	1			1981: Eight Cylinder
	J323 7116	1			1982-86
					Without Cruise Control
	J536 2173	1			1981-86
48	J448 8318	1			SCREW
49	J448 7853	1			CLIP
50	J321 1424	1			SWITCH, Buzzer
51	J420 0414	1			NUT
52	J400 3949	2			SCREW
53	J318 7257	1			RETAINER
54	J318 7249	1			PIN
55	J318 7255	1			SPRING

MODEL CODES
16=Cherokee 2 Dr.(1981-83)
17=Cherokee 2 Dr.(1981-83)
73=Cherokee 2WD-2 Dr.(1984-86)
74=Cherokee 2WD-4 Dr.(1984-86)
18=Cherokee 4 Dr.(1981-83)
77=Cherokee 4WD-2 Dr.(1984-86)
78=Cherokee 4WD-4 Dr.(1984-86)
85=CJ-5 (1981-83)
86=CJ-6(1981)
87=CJ-7(1981-86)
88=CJ-8, Scrambler(1981-86)
64=Comanche 2WD-6 Ft. Box(1986)
66=Comanche 2WD-7 Ft. Box(1986)
63=Comanche 4WD-6 Ft. Box(1986)
65=Comanche 4WD-7 Ft. Box(1986)
15=Grand Wagoneer 4 Dr.(1984-86)
25=J-10 Truck 7 Ft. Box(1981-84)
26=J10 Truck 8 Ft. Box(1981-86)
27=J-20 Truck 8 Ft. Box(1981-86)
15=Wagoneer 4 Dr.(1981-83)
75=Wagoneer 4WD-4 Dr.(1984-86)

BODY
CJ=CJ-5, CJ-6, CJ-7, CJ-8, Scrambler(1981-86)
MJ=Comanche Pickup(1986)

STYLES
SJ=Wagoneer(1981-83), Grand Wagoneer(1984-86), Cherokee(1981-83), J-10, J-20(1981-86)
XJ=Wagoneer(1984-86), Cherokee(1984-86)

AR = Use as Required - = Non Illustrated Part P.A.R. = Paint as Required

« RETURN TO GROUP INDEX

HOUSING, STEERING COLUMN LOWER WITH COLUMN SHIFT, WITH TILT WHEEL CJ-5,6,7,8, SCRAMBLER
Figure 19-1700

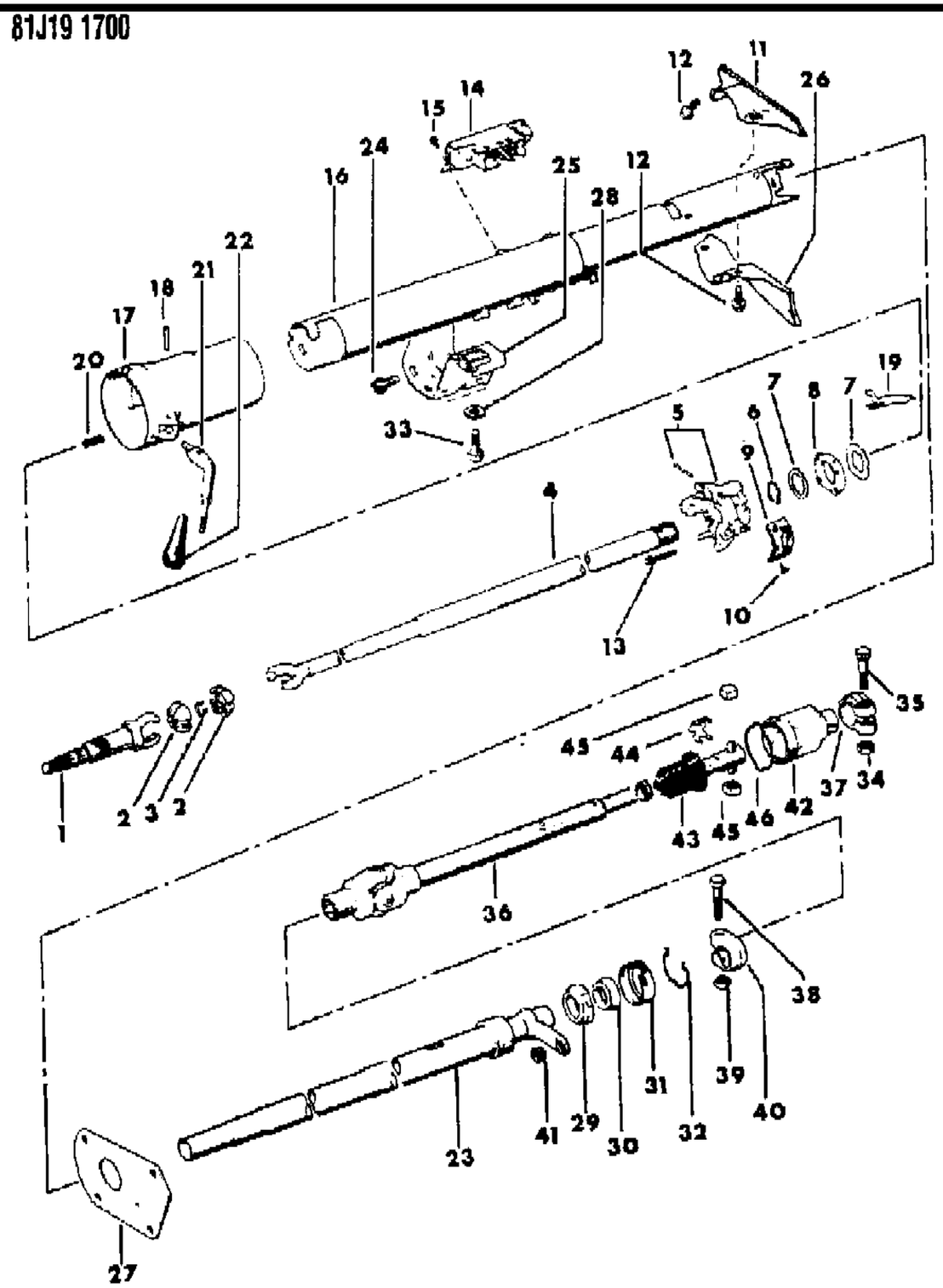

ITEM	PART NUMBER	QTY	BODY	MODEL	DESCRIPTION
1	J812 8888	1			SHAFT
2					SPHERE
	J448 7842	2			
	J812 7864	2			EXPORT
3	J448 7843	1			SPRING
4	J448 7840	1			SHAFT ASSEMBLY, Column
5					SUPPORT ASSEMBLY
	J448 7845	1			1981-83
	8350 1112	1			1984-86
6	J448 7864	1			CLIP
7					WASHER
	J448 7872	1			Thrust
	J448 7873	1			Wave
8	J448 7860	1			PLATE
9	J319 5616	1			GATE
10	J320 8210	1			SCREW
11	J319 6870	1			PLATE
12	J027 3573	4			SCREW
13	J448 7867	4			SCREW
14	J812 8890	1			SWITCH, Ignition
15	J448 7772	2			SCREW
16	J813 0178	1			JACKET ASSEMBLY
17	J319 6538	1			BOWL
18	J400 3925	1			PIN
19					POINTER
	J319 6688	1			1981-83
	J536 5063	1			1984-86
20	J812 0251	1			SPRING
21	J321 8720	1			LEVER ASSEMBLY
22	J321 6462	1			KNOB
23	J448 9059	1			TUBE ASSEMBLY
24	1150 2764	4			BOLT
25	J535 1229	1			BRACKET
26	J319 6897	1			PLATE
27	J319 6896	1			SEAL
28	J012 0388	2			WASHER
29	J448 7696	1			ADAPTER
30	J448 6713	1			BEARING
31	J448 7743	1			RETAINER

MODEL CODES
16=Cherokee 2 Dr.(1981-83)
17=Cherokee 2 Dr.(1981-83)
73=Cherokee 2WD-2 Dr.(1984-86)
74=Cherokee 2WD-4 Dr.(1984-86)
18=Cherokee 4 Dr.(1981-83)
77=Cherokee 4WD-2 Dr.(1984-86)
78=Cherokee 4WD-4 Dr.(1984-86)
85=CJ-5 (1981-83)
86=CJ-6(1981)
87=CJ-7(1981-86)
88=CJ-8, Scrambler(1981-86)
64=Comanche 2WD-6 Ft. Box(1986)
66=Comanche 2WD-7 Ft. Box(1986)
63=Comanche 4WD-6 Ft. Box(1986)
65=Comanche 4WD-7 Ft. Box(1986)
15=Grand Wagoneer 4 Dr.(1984-86)
25=J-10 Truck 7 Ft. Box(1981-84)
26=J10 Truck 8 Ft. Box(1981-86)
27=J-20 Truck 8 Ft. Box(1981-86)
15=Wagoneer 4 Dr.(1981-83)
75=Wagoneer 4WD-4 Dr.(1984-86)

BODY
CJ=CJ-5, CJ-6, CJ-7, CJ-8, Scrambler(1981-86)
MJ=Comanche Pickup(1986)

STYLES
SJ=Wagoneer(1981-83), Grand Wagoneer(1984-86), Cherokee(1981-83), J-10, J-20(1981-86)
XJ=Wagoneer(1984-86), Cherokee(1984-86)

AR = Use as Required - = Non Illustrated Part P.A.R. = Paint as Required

« RETURN TO GROUP INDEX »

HOUSING, STEERING COLUMN LOWER WITH COLUMN SHIFT, WITH TILT WHEEL CJ-5,6,7,8, SCRAMBLER
Figure 19-1700

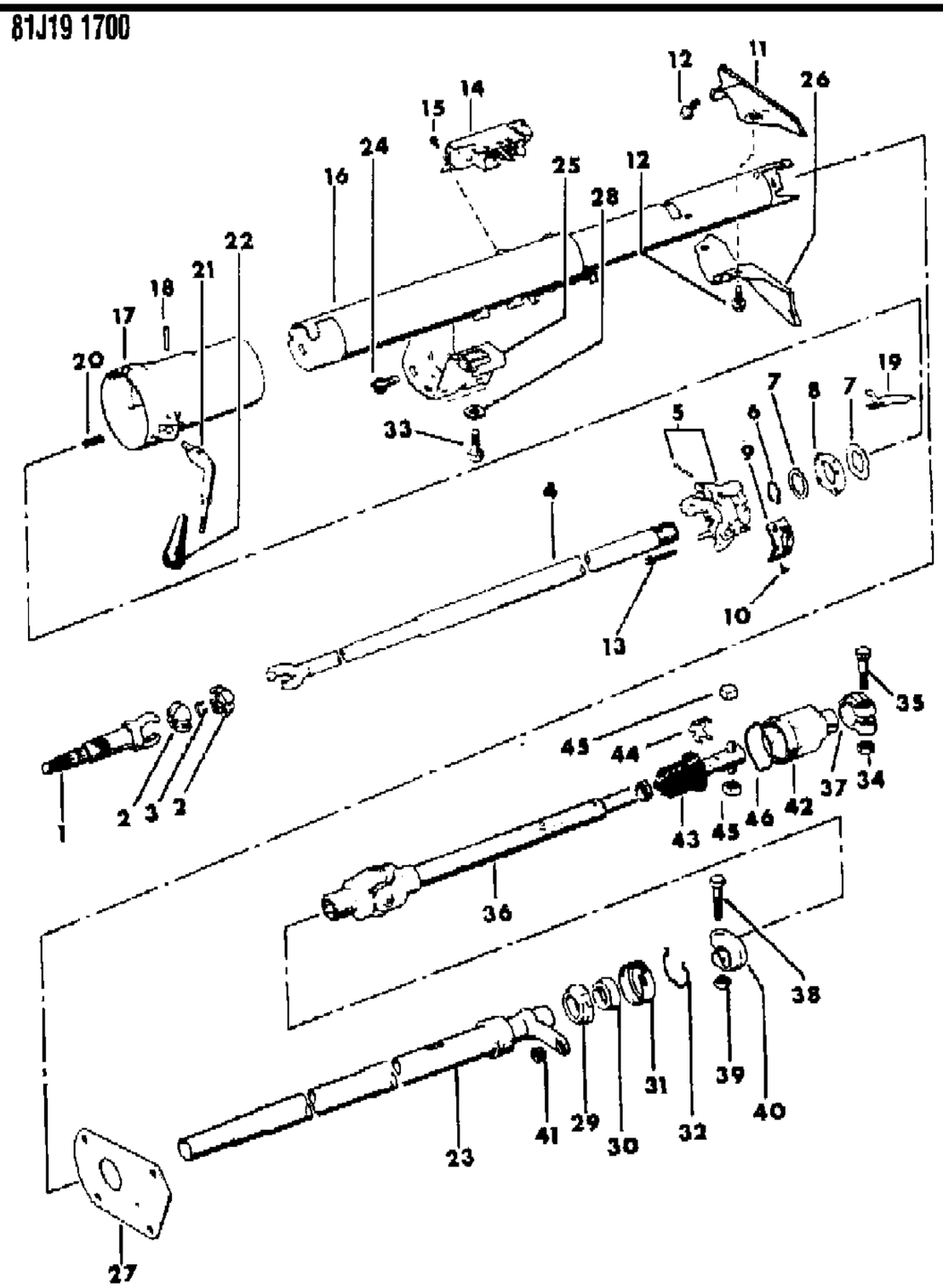

ITEM	PART NUMBER	QTY	BODY	MODEL	DESCRIPTION
32	J448 7739	1			CLIP
33	1150 2764	4			BOLT
34					NUT
	J941 1783	1			With Power Steering
	J400 5653	1			Without Power Steering
35					BOLT
	J099 4603	1			With Power Steering
	J319 4110	1			Without Power Steering
36					SHAFT ASSEMBLY, Lower
	J535 4934	1			With Power Steering
	J535 3135	1			Without Power Steering
37					CLAMP
	J099 4605	1			With Power Steering
	J099 4520	1			Without Power Steering
38	J319 4110	1			BOLT
39	J448 8431	1			NUT
40	J319 1827	1			CLAMP
41	J319 4672	1			GROMMET
42					COUPLING
	J099 8710	1			With Power Steering
	J812 1299	1			Without Power Steering
43	J813 2676	1			BOOT
44	J320 4878	1			SPRING
45	J320 4875	2			BEARING
46	J448 6679	1			CLIP

MODEL CODES

16=Cherokee 2 Dr.(1981-83)
17=Cherokee 2 Dr.(1981-83)
73=Cherokee 2WD-2 Dr.(1984-86)
74=Cherokee 2WD-4 Dr.(1984-86)
18=Cherokee 4 Dr.(1981-83)
77=Cherokee 4WD-2 Dr.(1984-86)
78=Cherokee 4WD-4 Dr.(1984-86)
85=CJ-5 (1981-83)
86=CJ-6(1981)
87=CJ-7(1981-86)
88=CJ-8, Scrambler(1981-86)
64=Comanche 2WD-6 Ft. Box(1986)
66=Comanche 2WD-7 Ft. Box(1986)
63=Comanche 4WD-6 Ft. Box(1986)
65=Comanche 4WD-7 Ft. Box(1986)
15=Grand Wagoneer 4 Dr.(1984-86)
25=J-10 Truck 7 Ft. Box(1981-84)
26=J10 Truck 8 Ft. Box(1981-86)
27=J-20 Truck 8 Ft. Box(1981-86)
15=Wagoneer 4 Dr.(1981-83)
75=Wagoneer 4WD-4 Dr.(1984-86)

BODY
CJ=CJ-5, CJ-6, CJ-7, CJ-8, Scrambler(1981-86)
MJ=Comanche Pickup(1986)

STYLES
SJ=Wagoneer(1981-83), Grand Wagoneer(1984-86), Cherokee(1981-83), J-10, J-20(1981-86)
XJ=Wagoneer(1984-86), Cherokee(1984-86)

AR = Use as Required - = Non Illustrated Part P.A.R. = Paint as Required

« RETURN TO GROUP INDEX

COLUMN ASSEMBLY, STEERING WITH FLOOR MOUNTED GEAR SHIFT XJ CHEROKEE, XJ WAGONEER, COMANCHE
Figure 19-1800

81J19 1800

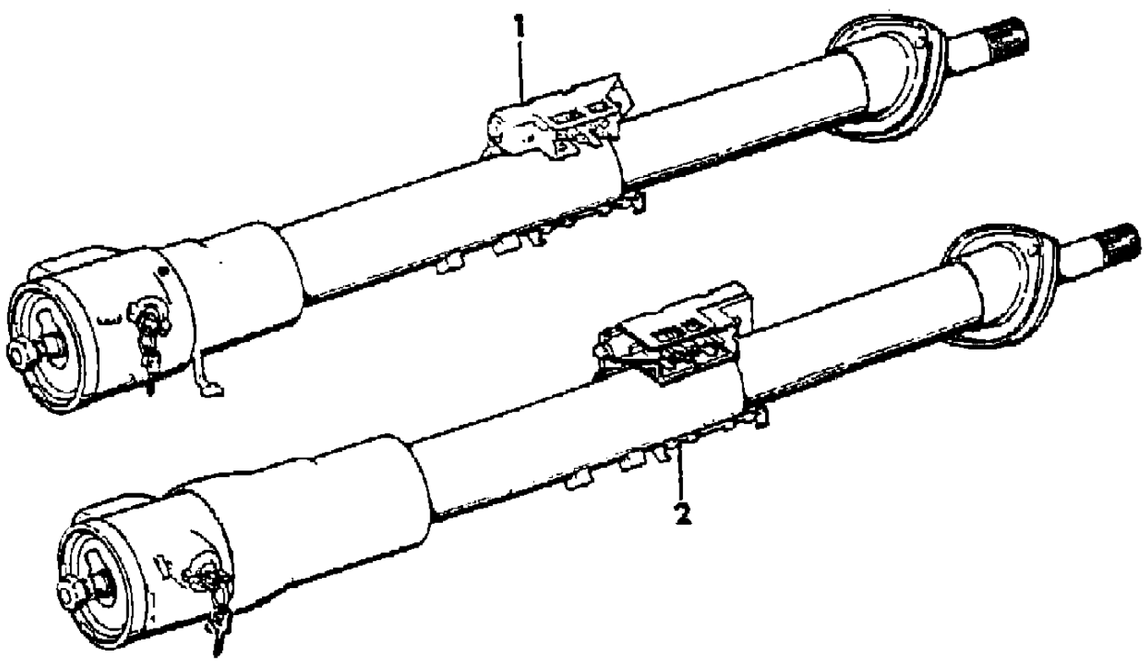

ITEM	PART NUMBER	QTY	BODY	MODEL	DESCRIPTION
1					COLUMN ASSEMBLY, Steering, Without Tilt Wheel
					Without Intermittent Wipers
					With Manual Transmission
	5200 1048	1			1984
	5200 1951	1			1985-86
					With Automatic Transmission
	5200 1052	1			1984
	5200 1955	1			1985-86
					With Intermittent Wipers
					With Manual Transmission
	5200 1049	1			1984
	5200 1952	1			1985-86
					With Automatic Transmission
	5200 1053	1			1984
	5200 1956	1			1985-86
2					COLUMN ASSEMBLY, Steering, With Tilt Wheel
					Without Intermittent Wipers
					With Manual Transmission
	5200 1046	1			1984
					With Automatic Transmission
	5200 1050	1			1984
					With Intermittent Wipers
					With Manual Transmission
	5200 1047	1			1984
	5200 1950	1			1985-86
					With Automatic Transmission
	5200 1051	1			1984
	5200 1954	1			1985-86

MODEL CODES

16=Cherokee 2 Dr.(1981-83)	78=Cherokee 4WD-4 Dr.(1984-86)	64=Comanche 2WD-6 Ft. Box(1986)	25=J-10 Truck 7 Ft. Box(1981-84)
17=Cherokee 2 Dr.(1981-83)	85=CJ-5 (1981-83)	66=Comanche 2WD-7 Ft. Box(1986)	26=J10 Truck 8 Ft. Box(1981-86)
73=Cherokee 2WD-2 Dr.(1984-86)	86=CJ-6(1981)	63=Comanche 4WD-6 Ft. Box(1986)	27=J-20 Truck 8 Ft. Box(1981-86)
74=Cherokee 2WD-4 Dr.(1984-86)	87=CJ-7(1981-86)	65=Comanche 4WD-7 Ft. Box(1986)	15=Wagoneer 4 Dr.(1981-83)
18=Cherokee 4 Dr.(1981-83)	88=CJ-8, Scrambler(1981-86)	15=Grand Wagoneer 4 Dr.(1984-86)	75=Wagoneer 4WD-4 Dr.(1984-86)
77=Cherokee 4WD-2 Dr.(1984-86)			

BODY
CJ=CJ-5, CJ-6, CJ-7, CJ-8, Scrambler(1981-86)
MJ=Comanche Pickup(1986)

STYLES
SJ=Wagoneer(1981-83), Grand Wagoneer(1984-86), Cherokee(1981-83), J-10, J-20(1981-86)
XJ=Wagoneer(1984-86), Cherokee(1984-86)

AR = Use as Required - = Non Illustrated Part P.A.R. = Paint as Required

« RETURN TO GROUP INDEX

HOUSING, STEERING COLUMN UPPER WITH FLOOR GEAR SHIFT, WITHOUT TILT WHEEL XJ CHEROKEE, XJ WAGONEER, COMANCHE
Figure 19-1900

81J19 1900

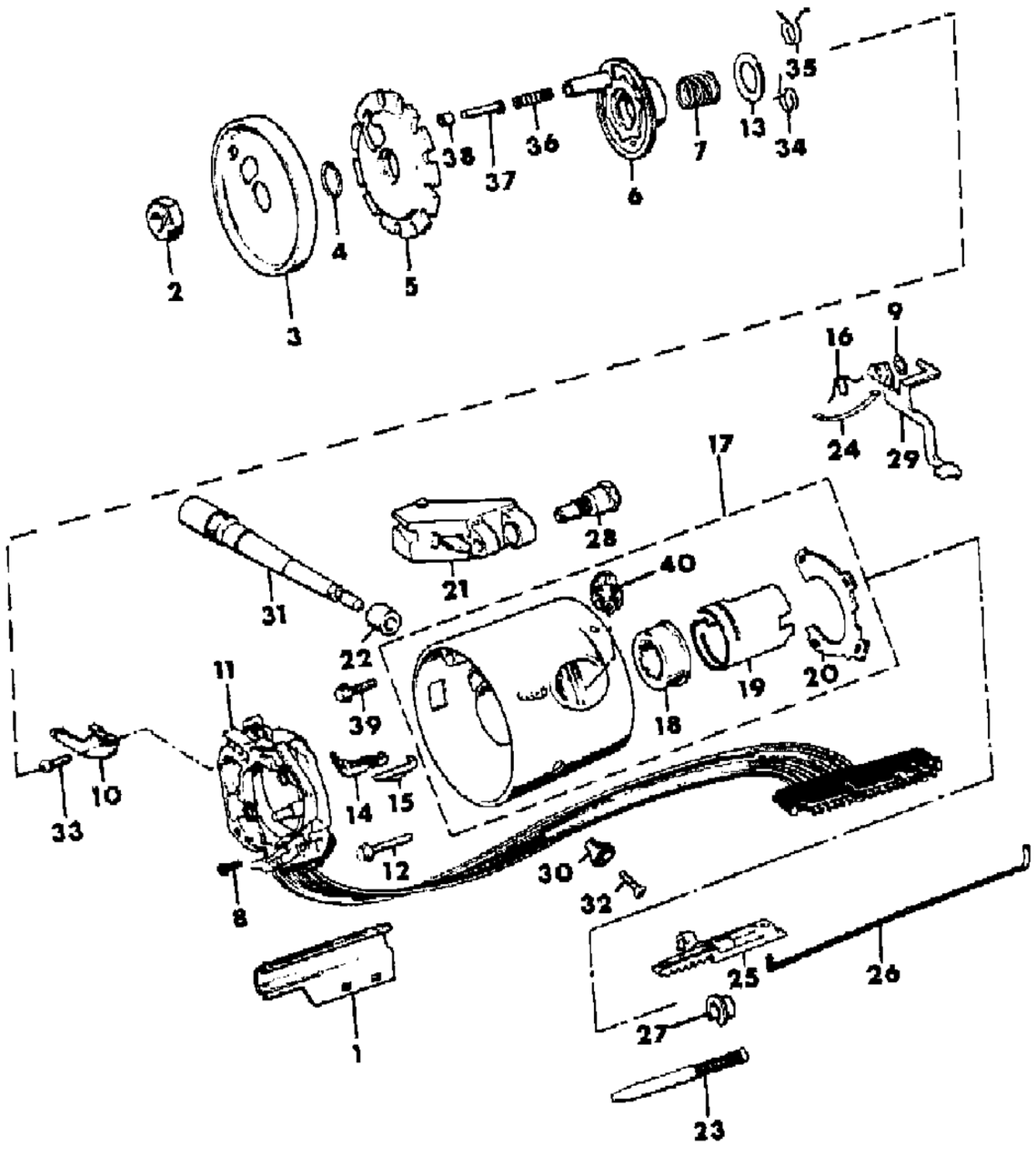

ITEM	PART NUMBER	QTY	BODY	MODEL	DESCRIPTION
1	8350 0225	1			PROTECTOR
2	J420 0414	1			NUT
3	J322 8743	1			COVER
4	J320 8377	2			RING, Snap
5	J812 7831	1			PLATE, Lock
6	J448 7711	1			CAM,
7	J448 7765	1			SPRING
8	J448 8301	3			SCREW
9	J812 0186	1			WASHER
10	8351 0088	1			ARM, Switch Lever
11	J322 9970	1			SWITCH, Directional
12	J448 7761	4			SCREW
13	J320 8008	1			WASHER
14	J321 1423	1			SWITCH, Buzzer
15	J448 7713	1			CLIP
16	J812 0185	1			SPRING
17	J813 4499	1			HOUSING ASSEMBLY
18	J812 7850	1			BEARING
19	J813 3537	1			BUSHING
20	J813 4703	1			RETAINER
21					SWITCH, Wiper
	5600 0032	1			With Intermittent Wipers
	5600 0031	1			Without Intermittent Wipers
22	5600 2285				INSULATOR
23	J448 7897	1			BOLT
24	J448 7774	1			CLIP
25					RACK
	J812 1437	1			With Manual Transmission
	8350 0216	1			With Automatic Transmission
26					ROD
	8350 0238	1			With Manual Transmission
	8350 0220	1			With Automatic Transmission
27	J448 7777	1			WASHER
28	J813 3538	1			PIN
29	T813 3541	1			LEVER
30					KNOB, Hazard Lights
	J323 8343	1			1984-85
	5200 3425	1			1986
31					LEVER, Directional Signal

MODEL CODES

16=Cherokee 2 Dr.(1981-83)	78=Cherokee 4WD-4 Dr.(1984-86)	64=Comanche 2WD-6 Ft. Box(1986)	25=J-10 Truck 7 Ft. Box(1981-84)
17=Cherokee 2 Dr.(1981-83)	85=CJ-5 (1981-83)	66=Comanche 2WD-7 Ft. Box(1986)	26=J10 Truck 8 Ft. Box(1981-86)
73=Cherokee 2WD-2 Dr.(1984-86)	86=CJ-6(1981)	63=Comanche 4WD-6 Ft. Box(1986)	27=J-20 Truck 8 Ft. Box(1981-86)
74=Cherokee 2WD-4 Dr.(1984-86)	87=CJ-7(1981-86)	65=Comanche 4WD-7 Ft. Box(1986)	15=Wagoneer 4 Dr.(1981-83)
18=Cherokee 4 Dr.(1981-83)	88=CJ-8, Scrambler(1981-86)	15=Grand Wagoneer 4 Dr.(1984-86)	75=Wagoneer 4WD-4 Dr.(1984-86)
77=Cherokee 4WD-2 Dr.(1984-86)			

BODY
CJ=CJ-5, CJ-6, CJ-7, CJ-8, Scrambler(1981-86)
MJ=Comanche Pickup(1986)

STYLES
SJ=Wagoneer(1981-83), Grand Wagoneer(1984-86), Cherokee(1981-83), J-10, J-20(1981-86)
XJ=Wagoneer(1984-86), Cherokee(1984-86)

AR = Use as Required - = Non Illustrated Part P.A.R. = Paint as Required

HOUSING, STEERING COLUMN UPPER WITH FLOOR GEAR SHIFT, WITHOUT TILT WHEEL XJ CHEROKEE, XJ WAGONEER, COMANCHE
Figure 19-1900

81J19 1900

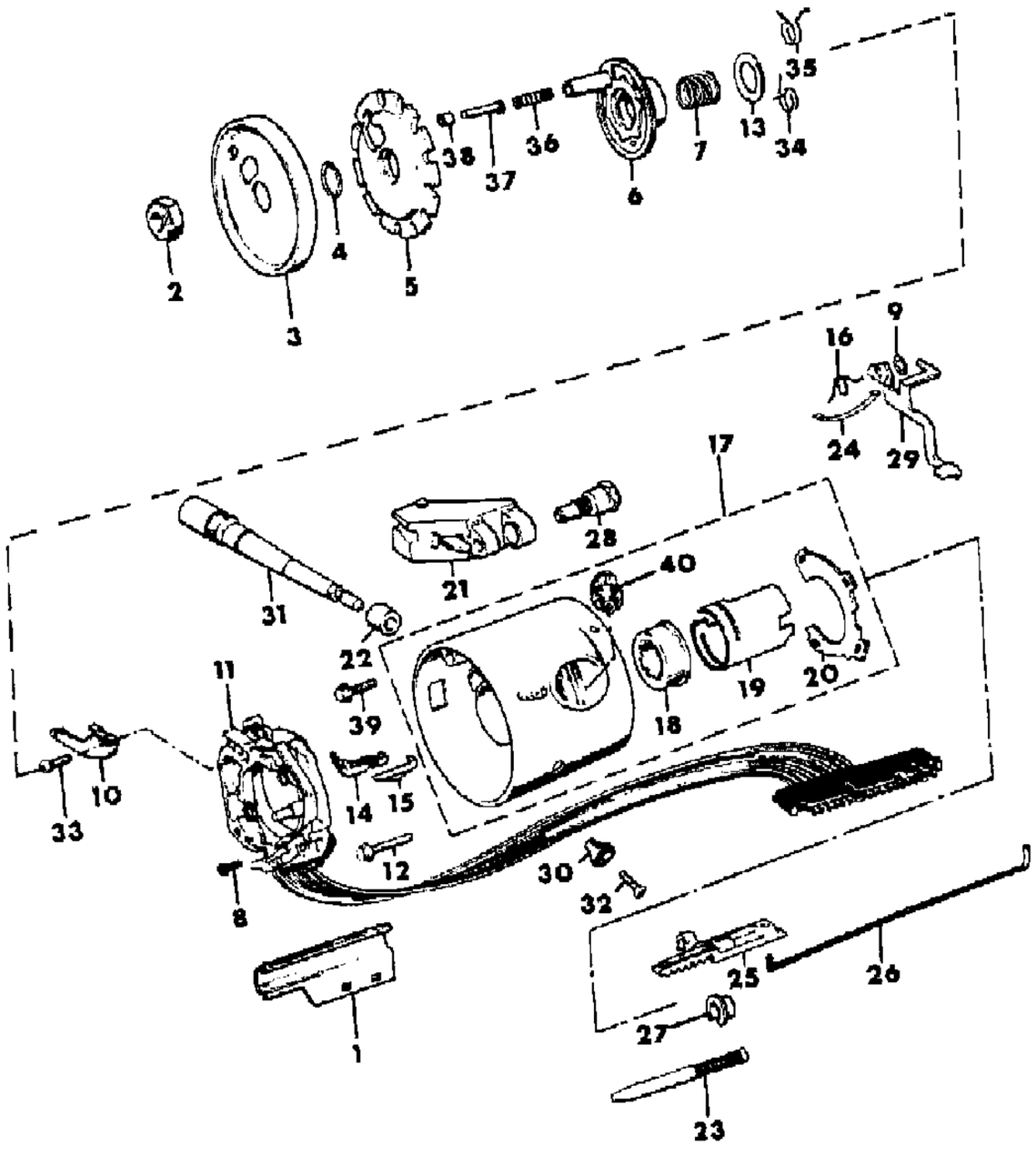

ITEM	PART NUMBER	QTY	BODY	MODEL	DESCRIPTION
					With Intermittent Wipers
	5600 0034	1			With Cruise Control
	5600 0433	1			Without Cruise Control
	5600 0432	1			Without Intermittent Wipers
32	3420 2670	1			SCREW
33	J400 1267	1			SCREW
34	J812 9317	1			SPRING, Lower
35	J812 9335	1			SPRING, Upper
36	J318 7255	1			SPRING
37	J318 7249	1			PIN
38	J318 7257	1			RETAINER
39	8350 2102	1			SCREW
40	J812 0097	1			SECTOR

MODEL CODES

16=Cherokee 2 Dr.(1981-83)
17=Cherokee 2 Dr.(1981-83)
73=Cherokee 2WD-2 Dr.(1984-86)
74=Cherokee 2WD-4 Dr.(1984-86)
18=Cherokee 4 Dr.(1981-83)
77=Cherokee 4WD-2 Dr.(1984-86)
78=Cherokee 4WD-4 Dr.(1984-86)
85=CJ-5 (1981-83)
86=CJ-6(1981)
87=CJ-7(1981-86)
88=CJ-8, Scrambler(1981-86)
64=Comanche 2WD-6 Ft. Box(1986)
66=Comanche 2WD-7 Ft. Box(1986)
63=Comanche 4WD-6 Ft. Box(1986)
65=Comanche 4WD-7 Ft. Box(1986)
15=Grand Wagoneer 4 Dr.(1984-86)
25=J-10 Truck 7 Ft. Box(1981-84)
26=J10 Truck 8 Ft. Box(1981-86)
27=J-20 Truck 8 Ft. Box(1981-86)
15=Wagoneer 4 Dr.(1981-83)
75=Wagoneer 4WD-4 Dr.(1984-86)

BODY
CJ=CJ-5, CJ-6, CJ-7, CJ-8, Scrambler(1981-86)
MJ=Comanche Pickup(1986)

STYLES
SJ=Wagoneer(1981-83), Grand Wagoneer(1984-86), Cherokee(1981-83), J-10, J-20(1981-86)
XJ=Wagoneer(1984-86), Cherokee(1984-86)

AR = Use as Required - = Non Illustrated Part P.A.R. = Paint as Required

« RETURN TO GROUP INDEX

HOUSING, STEERING COLUMN LOWER WITH FLOOR GEAR SHIFT, WITHOUT TILT WHEEL XJ CHEROKEE, XJ WAGONEER, COMANCHE
Figure 19-2000

81J19 2000

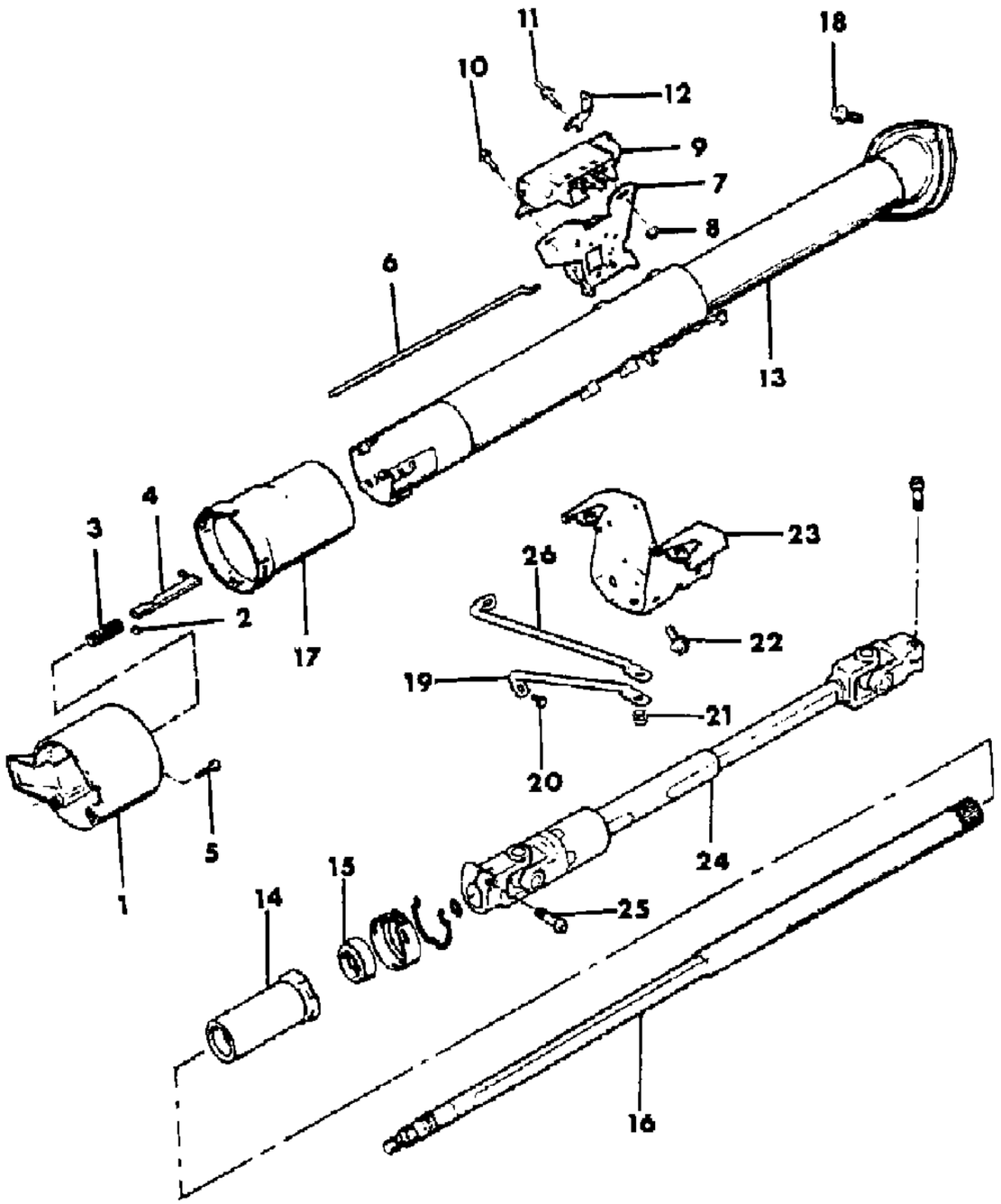

ITEM	PART NUMBER	QTY	BODY	MODEL	DESCRIPTION
1					BOWL, Shift
	J813 4497	1			With Manual Transmission
	8350 0218	1			With Automatic Transmission
2	8350 0217	1			BALL, With Automatic Transmission
3	8350 0237	1			SPRING, With Automatic Transmission
4	8350 0219	1			PIN, With Automatic Transmission
5	J448 8301	3			SCREW
6	8350 0226	1			ROD, Dimmer Switch
7	J323 9703	1			SWITCH, Dimmer
8	J012 0361	1			NUT
9	J325 0576	1			SWITCH, Ignition Lock
10	J448 7772	1			SCREW
11	J813 3546	1			STUD
12	8350 0224	1			BRACKET, With Automatic Transmission
13	8350 0222	1			JACKET ASSEMBLY
14	J812 9486	1			ADAPTER
15	J448 6713	1			BEARING
16		1			SHAFT, Steering Column Upper
	8350 0223	1			With a Lower Shaft Length of 580mm (Item 24)
	8350 2100	1			With a Lower Shaft Length of 570mm (Item 24)
17					SHROUD
	J813 3542	1			With Manual Transmission
	8350 0221	1			With Automatic Transmission
18	3420 1193	3			SCREW
19					ROD, Short
	5200 0470	1			1984-85
	5200 1375	1			1986
20	1150 2685	2			BOLT
21	1150 2812	2			NUT
22	1150 2764	4			SCREW
23	5200 0399	1			BRACKET
24					SHAFT, Steering Column Lower
					With Power Steering
	5200 1044	1			580mm Between Centerline of Mounting Holes
	5200 1948	1			570mm Between Centerline of Mounting Holes
					Without Power Steering
	5200 1045	1			580mm Between Centerline of Mounting Holes
	5200 1947	1			570mm Between Centerline of Mounting Holes
25	J420 0400	2			BOLT

MODEL CODES

16=Cherokee 2 Dr.(1981-83)
17=Cherokee 2 Dr.(1981-83)
73=Cherokee 2WD-2 Dr.(1984-86)
74=Cherokee 2WD-4 Dr.(1984-86)
18=Cherokee 4 Dr.(1981-83)
77=Cherokee 4WD-2 Dr.(1984-86)
78=Cherokee 4WD-4 Dr.(1984-86)
85=CJ-5 (1981-83)
86=CJ-6(1981)
87=CJ-7(1981-86)
88=CJ-8, Scrambler(1981-86)
64=Comanche 2WD-6 Ft. Box(1986)
66=Comanche 2WD-7 Ft. Box(1986)
63=Comanche 4WD-6 Ft. Box(1986)
65=Comanche 4WD-7 Ft. Box(1986)
15=Grand Wagoneer 4 Dr.(1984-86)
25=J-10 Truck 7 Ft. Box(1981-84)
26=J10 Truck 8 Ft. Box(1981-86)
27=J-20 Truck 8 Ft. Box(1981-86)
15=Wagoneer 4 Dr.(1981-83)
75=Wagoneer 4WD-4 Dr.(1984-86)

BODY
CJ=CJ-5, CJ-6, CJ-7, CJ-8, Scrambler(1981-86)
MJ=Comanche Pickup(1986)

STYLES
SJ=Wagoneer(1981-83), Grand Wagoneer(1984-86), Cherokee(1981-83), J-10, J-20(1981-86)
XJ=Wagoneer(1984-86), Cherokee(1984-86)

AR = Use as Required - = Non Illustrated Part P.A.R. = Paint as Required

HOUSING, STEERING COLUMN LOWER WITH FLOOR GEAR SHIFT, WITHOUT TILT WHEEL XJ CHEROKEE, XJ WAGONEER, COMANCHE
Figure 19-2000

81J19 2000

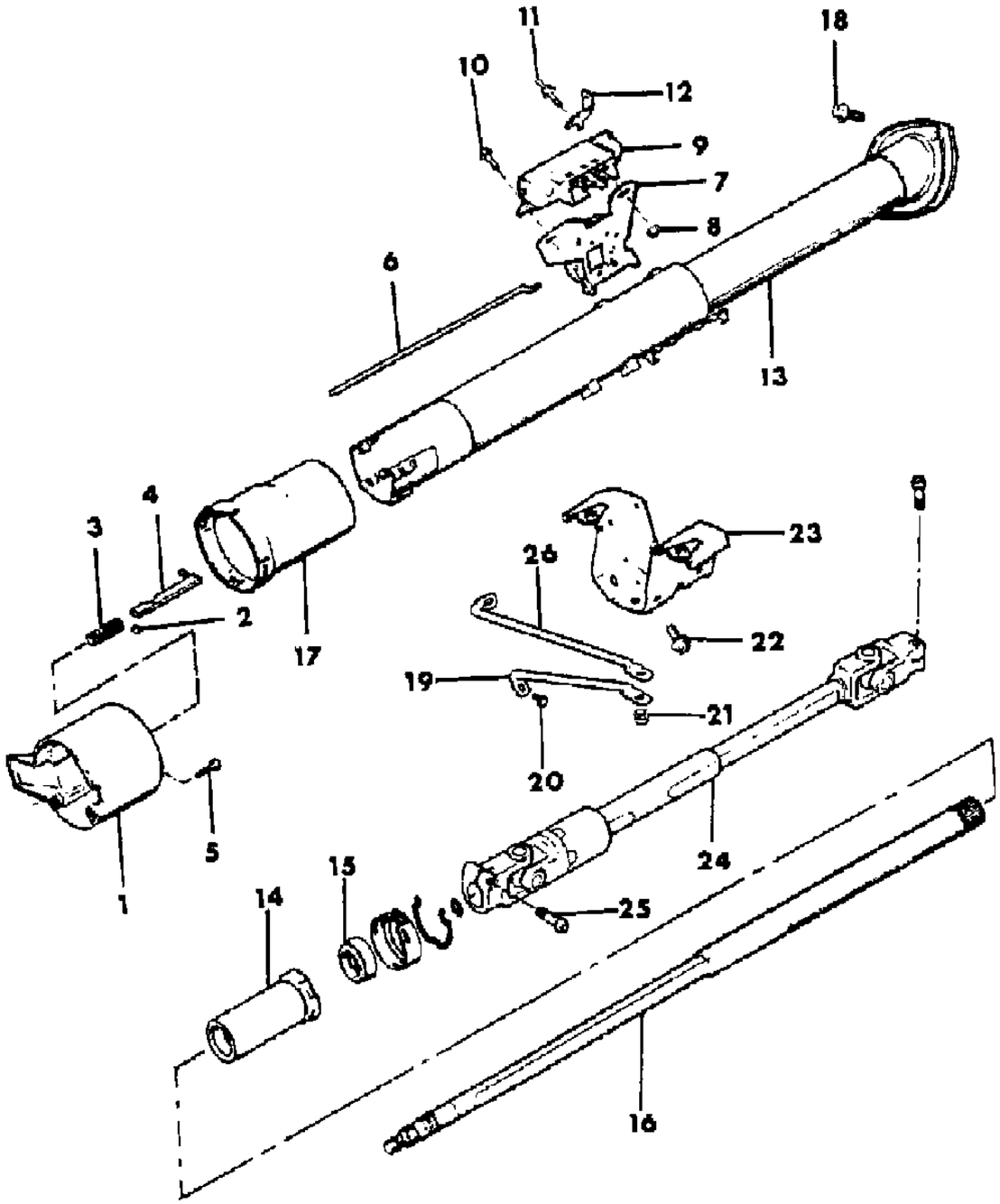

ITEM	PART NUMBER	QTY	BODY	MODEL	DESCRIPTION
26	5200 0471	1			ROD, Long

MODEL CODES
16=Cherokee 2 Dr.(1981-83)
17=Cherokee 2 Dr.(1981-83)
73=Cherokee 2WD-2 Dr.(1984-86)
74=Cherokee 2WD-4 Dr.(1984-86)
18=Cherokee 4 Dr.(1981-83)
77=Cherokee 4WD-2 Dr.(1984-86)
78=Cherokee 4WD-4 Dr.(1984-86)
85=CJ-5 (1981-83)
86=CJ-6(1981)
87=CJ-7(1981-86)
88=CJ-8, Scrambler(1981-86)
64=Comanche 2WD-6 Ft. Box(1986)
66=Comanche 2WD-7 Ft. Box(1986)
63=Comanche 4WD-6 Ft. Box(1986)
65=Comanche 4WD-7 Ft. Box(1986)
15=Grand Wagoneer 4 Dr.(1984-86)
25=J-10 Truck 7 Ft. Box(1981-84)
26=J10 Truck 8 Ft. Box(1981-86)
27=J-20 Truck 8 Ft. Box(1981-86)
15=Wagoneer 4 Dr.(1981-83)
75=Wagoneer 4WD-4 Dr.(1984-86)

BODY
CJ=CJ-5, CJ-6, CJ-7, CJ-8, Scrambler(1981-86)
MJ=Comanche Pickup(1986)

STYLES
SJ=Wagoneer(1981-83), Grand Wagoneer(1984-86), Cherokee(1981-83), J-10, J-20(1981-86)
XJ=Wagoneer(1984-86), Cherokee(1984-86)

AR = Use as Required - = Non Illustrated Part P.A.R. = Paint as Required

« RETURN TO GROUP INDEX

HOUSING, STEERING COLUMN UPPER WITH FLOOR SHIFT, WITH TILT WHEEL XJ CHEROKEE, XJ WAGONEER, COMANCHE
Figure 19-2100

81J19 2100

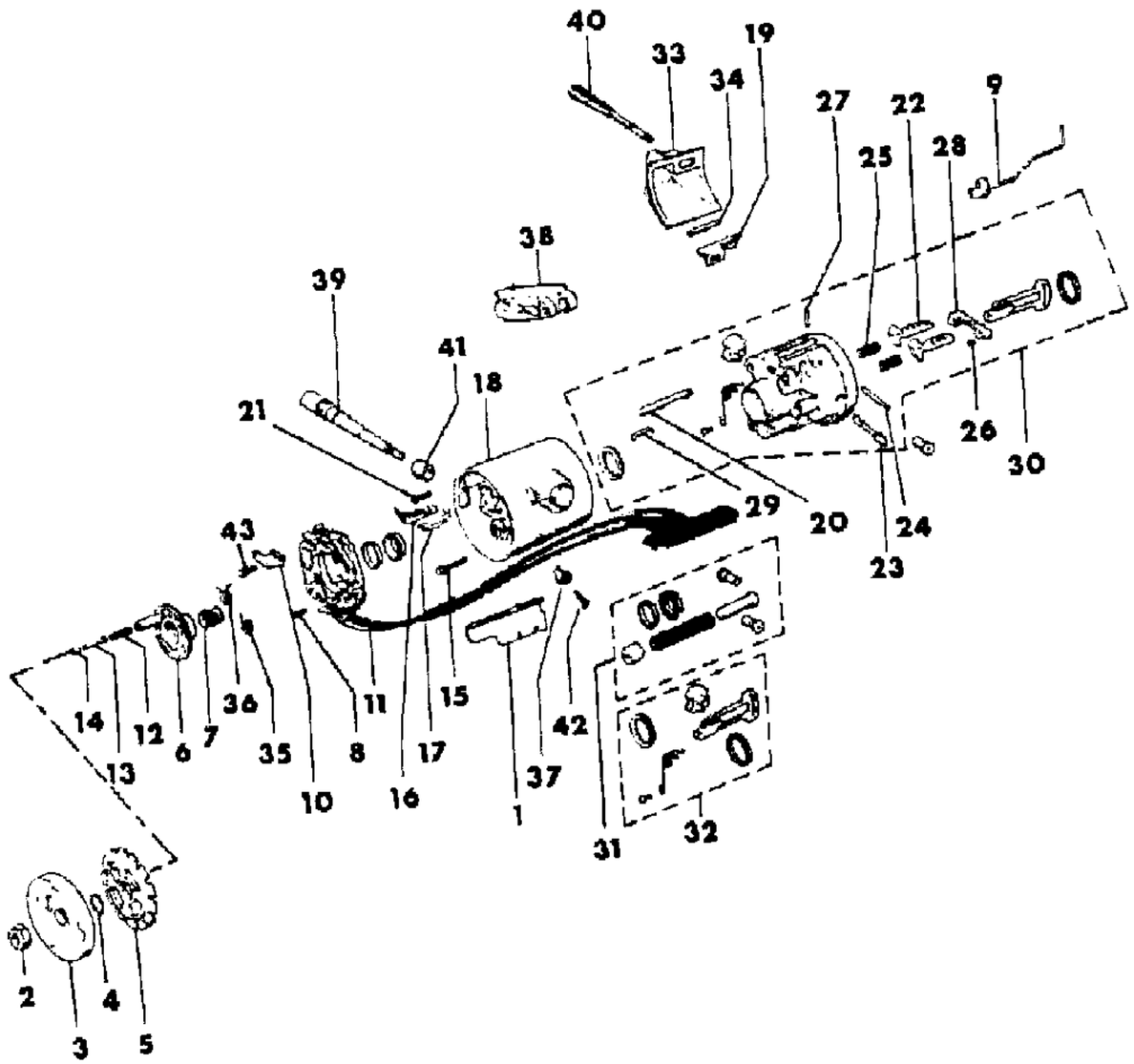

ITEM	PART NUMBER	QTY	BODY	MODEL	DESCRIPTION
1	8350 0225	1			PROTECTOR
2	J420 0414	1			NUT
3	J322 8743	1			COVER
4	J320 8377	1			RING, Snap
5	J812 7874	1			PLATE, Lock
6	J448 7816	1			CAM, Cancelling
7	J812 2485	1			SPRING
8	J448 8301	3			SCREW
9					ACTUATOR ASSEMBLY, Ignition ***
	8350 0239	1			With Manual Transmission
	8350 0227	1			With Automatic Transmission
10	J813 3560	1			ARM, Actuator
11	J322 9970	1			SWITCH, Directional
12	J318 7255	1			SPRING
13	J318 7249	1			PIN
14	J318 7257	1			RETAINER
15	J813 3572	3			SCREW
16	J321 1424	1			SWITCH, Buzzer
17	J448 7853	1			CLIP
18					COVER, Housing
	8350 0236	1			1984
	8350 2096	1			1985-86
19	J813 3570	1			ACTUATOR, Dimmer Switch
20	J448 7819	1			BOLT
21	8350 2103	1			SCREW
22					SHOE, Rack
	J448 7828	1			Right
	J812 2716	1			Left
23	J813 4191	1			SHAFT
24	J448 7822	1			PIN
25	J448 7832	2			SPRING
26	J320 8047	1			SPRING
27	J320 8043	1			PIN
28	J813 3567	1			LEVER
29	J448 7831	1			SPRING
30	8350 1104	1			HOUSING, Steering Column
31	8351 0054	1			GUIDE PACKAGE ***
32	8351 0055	1			RACK PACKAGE
33	J813 4704	1			CAP

MODEL CODES

16=Cherokee 2 Dr.(1981-83)
17=Cherokee 2 Dr.(1981-83)
73=Cherokee 2WD-2 Dr.(1984-86)
74=Cherokee 2WD-4 Dr.(1984-86)
18=Cherokee 4 Dr.(1981-83)
77=Cherokee 4WD-2 Dr.(1984-86)
78=Cherokee 4WD-4 Dr.(1984-86)
85=CJ-5 (1981-83)
86=CJ-6(1981)
87=CJ-7(1981-86)
88=CJ-8, Scrambler(1981-86)
64=Comanche 2WD-6 Ft. Box(1986)
66=Comanche 2WD-7 Ft. Box(1986)
63=Comanche 4WD-6 Ft. Box(1986)
65=Comanche 4WD-7 Ft. Box(1986)
15=Grand Wagoneer 4 Dr.(1984-86)
25=J-10 Truck 7 Ft. Box(1981-84)
26=J10 Truck 8 Ft. Box(1981-86)
27=J-20 Truck 8 Ft. Box(1981-86)
15=Wagoneer 4 Dr.(1981-83)
75=Wagoneer 4WD-4 Dr.(1984-86)

BODY
CJ=CJ-5, CJ-6, CJ-7, CJ-8, Scrambler(1981-86)
MJ=Comanche Pickup(1986)

STYLES
SJ=Wagoneer(1981-83), Grand Wagoneer(1984-86), Cherokee(1981-83), J-10, J-20(1981-86)
XJ=Wagoneer(1984-86), Cherokee(1984-86)

AR = Use as Required - = Non Illustrated Part P.A.R. = Paint as Required

« RETURN TO GROUP INDEX »

HOUSING, STEERING COLUMN UPPER WITH FLOOR SHIFT, WITH TILT WHEEL XJ CHEROKEE, XJ WAGONEER, COMANCHE
Figure 19-2100

81J19 2100

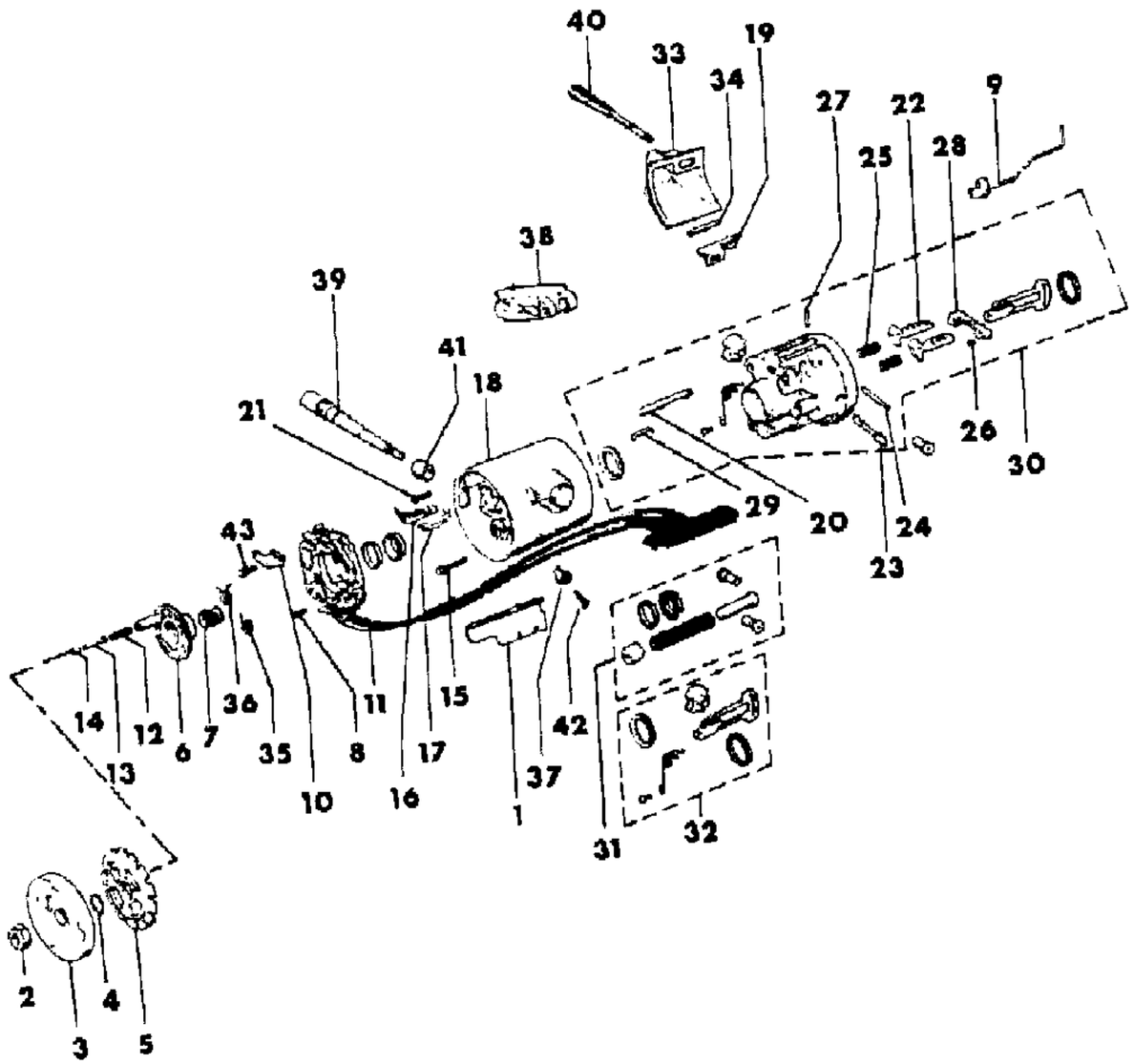

ITEM	PART NUMBER	QTY	BODY	MODEL	DESCRIPTION
34	J813 3565	1			PIN
35	J812 9317	1			SPRING, Lower
36	J812 9335	1			SPRING, Upper
37					KNOB, Hazard Lights
	J323 8343	1			1984-85
	5200 3425	1			1986
38					SWITCH ASSEMBLY, Wiper
	5600 0033	1			With Intermittent Wiper
	5600 0431	1			Without Intermittent Wiper
39					LEVER, Directional Signal
					With Intermittent Wipers
	5600 0034	1			With Cruise Control
	5600 0433	1			Without Cruise Control
	5600 0432	1			Without Intermittent Wipers
40	5600 0108	1			LEVER, Release
41	5600 2285	1			INSULATOR
42	3420 2670	1			SCREW
43	J400 1267	1			SCREW

MODEL CODES

16=Cherokee 2 Dr.(1981-83)
17=Cherokee 2 Dr.(1981-83)
73=Cherokee 2WD-2 Dr.(1984-86)
74=Cherokee 2WD-4 Dr.(1984-86)
18=Cherokee 4 Dr.(1981-83)
77=Cherokee 4WD-2 Dr.(1984-86)
78=Cherokee 4WD-4 Dr.(1984-86)
85=CJ-5 (1981-83)
86=CJ-6(1981)
87=CJ-7(1981-86)
88=CJ-8, Scrambler(1981-86)
64=Comanche 2WD-6 Ft. Box(1986)
66=Comanche 2WD-7 Ft. Box(1986)
63=Comanche 4WD-6 Ft. Box(1986)
65=Comanche 4WD-7 Ft. Box(1986)
15=Grand Wagoneer 4 Dr.(1984-86)
25=J-10 Truck 7 Ft. Box(1981-84)
26=J10 Truck 8 Ft. Box(1981-86)
27=J-20 Truck 8 Ft. Box(1981-86)
15=Wagoneer 4 Dr.(1981-83)
75=Wagoneer 4WD-4 Dr.(1984-86)

BODY
CJ=CJ-5, CJ-6, CJ-7, CJ-8, Scrambler(1981-86)
MJ=Comanche Pickup(1986)

STYLES
SJ=Wagoneer(1981-83), Grand Wagoneer(1984-86), Cherokee(1981-83), J-10, J-20(1981-86)
XJ=Wagoneer(1984-86), Cherokee(1984-86)

AR = Use as Required - = Non Illustrated Part P.A.R. = Paint as Required

« RETURN TO GROUP INDEX

HOUSING, STEERING COLUMN LOWER WITH FLOOR GEAR SHIFT, WITH TILT WHEEL XJ CHEROKEE, XJ WAGONEER, COMANCHE
Figure 19-2200

81J19 2200

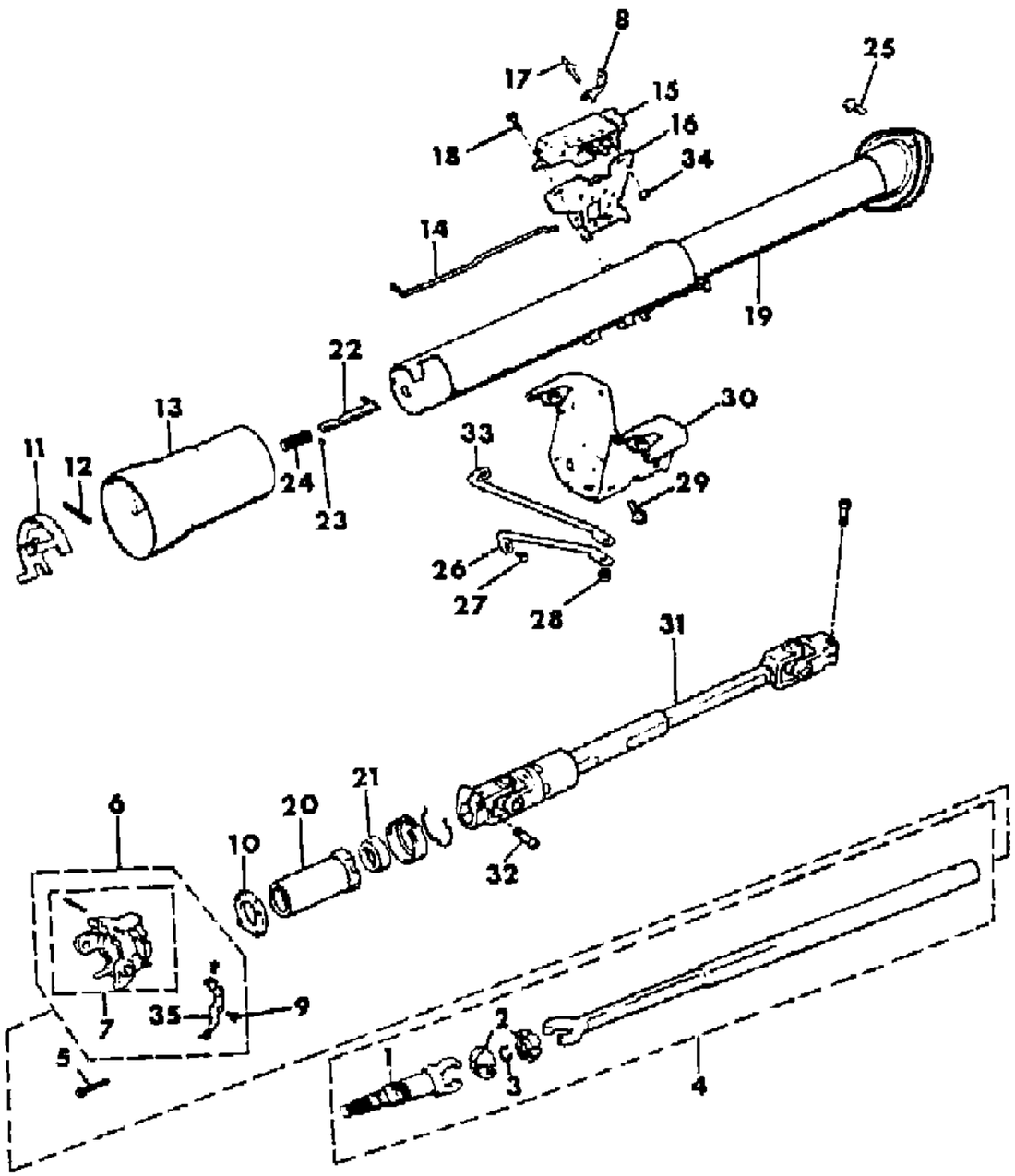

ITEM	PART NUMBER	QTY	BODY	MODEL	DESCRIPTION
1	J812 8888	1			SHAFT, Steering Column Upper
2	J448 7842	2			SPHERE
3	J448 7843	1			CLIP
4					SHAFT ASSEMBLY, Steering Column Upper
	8350 0229	1			With a Lower Shaft Length of 580mm (Item 24)
	8350 2101	1			With a Lower Shaft Length of 570mm (Item 24)
5	J448 7867	4			SCREW
6	8350 1109	1			SUPPORT, with Manual Transmission
7	8350 1369	1			SUPPORT, with Automatic Transmission
8	8350 0224	1			BRACKET, with Automatic Transmission
9	J320 8210	2			SCREW
10	J448 7860	1			PLATE
11	J812 8154	1			LEVER, with Manual Transmission
12	J812 8156	1			SPRING, with Manual Transmission
13					SHROUD, Shift Bowl
	8350 0359	1			With Manual Transmission
	8350 0234	1			With Automatic Transmission
14	8350 0233	1			ROD, Dimmer Switch
15	J325 0575	1			SWITCH, Ignition Lock
16	J323 9703	1			SWITCH, Dimmer
17	J813 3546	1			STUD
18	J448 7772	2			SCREW
19					JACKET ASSEMBLY
	8350 0240	1			With Manual Transmission
	8350 0228	1			With Automatic Transmission
20	J812 9486	1			ADAPTER
21	J448 6713	1			BEARING
22	8350 0231	1			PIN, with Automatic Transmission
23	8350 0232	1			PIN, with Automatic Transmission
24	8350 0235	1			SPRING, with Automatic Transmission
25	3420 1193	2			SCREW
26					ROD, Short
	5200 0470	1			1984-85
	5200 1375	1			1986
27	1150 2685	2			BOLT
28	1150 2812	2			NUT
29	1150 2764	4			SCREW
30	5200 0399	1			BRACKET
31					SHAFT, Steering Column Lower

MODEL CODES

16=Cherokee 2 Dr.(1981-83)
17=Cherokee 2 Dr.(1981-83)
73=Cherokee 2WD-2 Dr.(1984-86)
74=Cherokee 2WD-4 Dr.(1984-86)
18=Cherokee 4 Dr.(1981-83)
77=Cherokee 4WD-2 Dr.(1984-86)
78=Cherokee 4WD-4 Dr.(1984-86)
85=CJ-5 (1981-83)
86=CJ-6(1981)
87=CJ-7(1981-86)
88=CJ-8, Scrambler(1981-86)
64=Comanche 2WD-6 Ft. Box(1986)
66=Comanche 2WD-7 Ft. Box(1986)
63=Comanche 4WD-6 Ft. Box(1986)
65=Comanche 4WD-7 Ft. Box(1986)
15=Grand Wagoneer 4 Dr.(1984-86)
25=J-10 Truck 7 Ft. Box(1981-84)
26=J10 Truck 8 Ft. Box(1981-86)
27=J-20 Truck 8 Ft. Box(1981-86)
15=Wagoneer 4 Dr.(1981-83)
75=Wagoneer 4WD-4 Dr.(1984-86)

BODY
CJ=CJ-5, CJ-6, CJ-7, CJ-8, Scrambler(1981-86)
MJ=Comanche Pickup(1986)

STYLES
SJ=Wagoneer(1981-83), Grand Wagoneer(1984-86), Cherokee(1981-83), J-10, J-20(1981-86)
XJ=Wagoneer(1984-86), Cherokee(1984-86)

AR = Use as Required - = Non Illustrated Part P.A.R. = Paint as Required

HOUSING, STEERING COLUMN LOWER WITH FLOOR GEAR SHIFT, WITH TILT WHEEL XJ CHEROKEE, XJ WAGONEER, COMANCHE
Figure 19-2200

81J19 2200

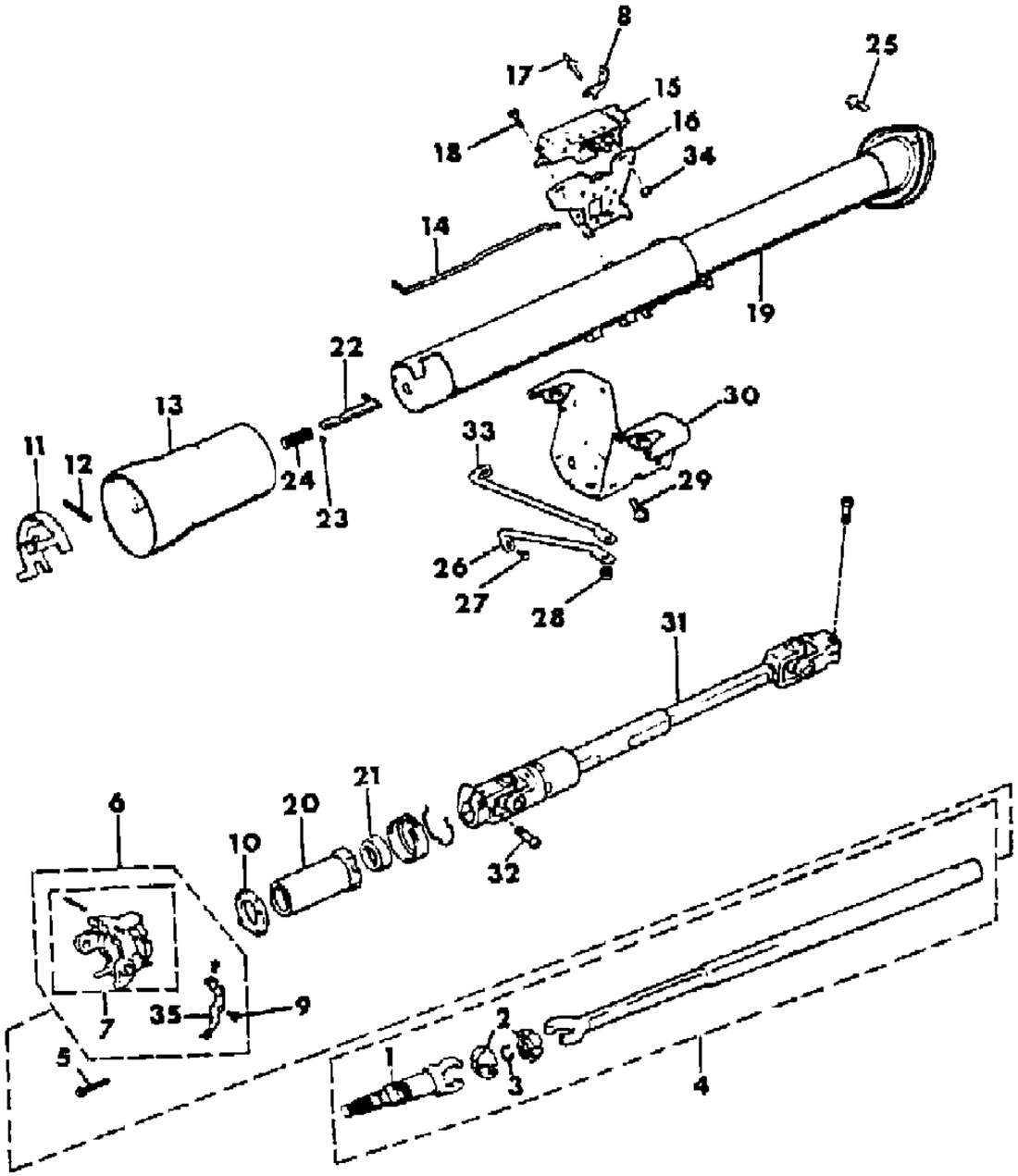

ITEM	PART NUMBER	QTY	BODY	MODEL	DESCRIPTION
					With Power Steering
	5200 1044	1			580mm Between Centerline of Mounting Holes
	5200 1948	1			570mm Between Centerline of Mounting Holes
					Without Power Steering
	5200 1045	1			580mm Between Centerline of Mounting Holes
	5200 1947	1			570mm Between Centerline of Mounting Holes
32	J420 0400	2			BOLT
33					ROD, Long
	5200 0471	1			1984-85
	5200 1376	1			1986
34	J012 0361	1			NUT
35	J813 3569	1			PLATE, with Manual Transmission

MODEL CODES

16=Cherokee 2 Dr.(1981-83)	78=Cherokee 4WD-4 Dr.(1984-86)	64=Comanche 2WD-6 Ft. Box(1986)	25=J-10 Truck 7 Ft. Box(1981-84)
17=Cherokee 2 Dr.(1981-83)	85=CJ-5 (1981-83)	66=Comanche 2WD-7 Ft. Box(1986)	26=J10 Truck 8 Ft. Box(1981-86)
73=Cherokee 2WD-2 Dr.(1984-86)	86=CJ-6(1981)	63=Comanche 4WD-6 Ft. Box(1986)	27=J-20 Truck 8 Ft. Box(1981-86)
74=Cherokee 2WD-4 Dr.(1984-86)	87=CJ-7(1981-86)	65=Comanche 4WD-7 Ft. Box(1986)	15=Wagoneer 4 Dr.(1981-83)
18=Cherokee 4 Dr.(1981-83)	88=CJ-8, Scrambler(1981-86)	15=Grand Wagoneer 4 Dr.(1984-86)	75=Wagoneer 4WD-4 Dr.(1984-86)
77=Cherokee 4WD-2 Dr.(1984-86)			

BODY
CJ=CJ-5, CJ-6, CJ-7, CJ-8, Scrambler(1981-86)
MJ=Comanche Pickup(1986)

STYLES
SJ=Wagoneer(1981-83), Grand Wagoneer(1984-86), Cherokee(1981-83), J-10, J-20(1981-86)
XJ=Wagoneer(1984-86), Cherokee(1984-86)

AR = Use as Required - = Non Illustrated Part P.A.R. = Paint as Required

« RETURN TO GROUP INDEX

COLUMN ASSEMBLY, STEERING WITH COLUMN GEAR SHIFT COMANCHE
Figure 19-2300

81J19 2300

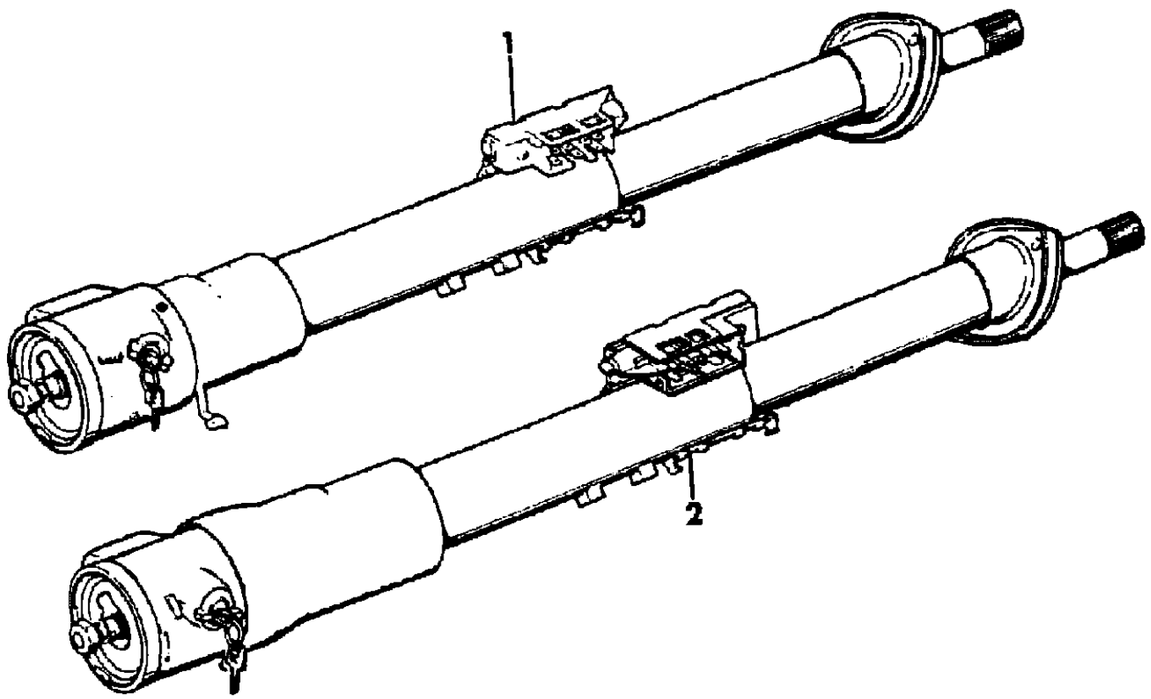

ITEM	PART NUMBER	QTY	BODY	MODEL	DESCRIPTION
1					COLUMN ASSEMBLY, Steering, Without Tilt Wheel
	5200 2707	1			With Intermittent Wipers
	5200 2706	1			Without Intermittent Wipers
2	5200 2708	1			COLUMN ASSEMBLY, Steering, With Tilt Wheel

MODEL CODES

16=Cherokee 2 Dr.(1981-83)
17=Cherokee 2 Dr.(1981-83)
73=Cherokee 2WD-2 Dr.(1984-86)
74=Cherokee 2WD-4 Dr.(1984-86)
18=Cherokee 4 Dr.(1981-83)
77=Cherokee 4WD-2 Dr.(1984-86)
78=Cherokee 4WD-4 Dr.(1984-86)
85=CJ-5 (1981-83)
86=CJ-6(1981)
87=CJ-7(1981-86)
88=CJ-8, Scrambler(1981-86)
64=Comanche 2WD-6 Ft. Box(1986)
66=Comanche 2WD-7 Ft. Box(1986)
63=Comanche 4WD-6 Ft. Box(1986)
65=Comanche 4WD-7 Ft. Box(1986)
15=Grand Wagoneer 4 Dr.(1984-86)
25=J-10 Truck 7 Ft. Box(1981-84)
26=J10 Truck 8 Ft. Box(1981-86)
27=J-20 Truck 8 Ft. Box(1981-86)
15=Wagoneer 4 Dr.(1981-83)
75=Wagoneer 4WD-4 Dr.(1984-86)

BODY
CJ=CJ-5, CJ-6, CJ-7, CJ-8, Scrambler(1981-86)
MJ=Comanche Pickup(1986)

STYLES
SJ=Wagoneer(1981-83), Grand Wagoneer(1984-86), Cherokee(1981-83), J-10, J-20(1981-86)
XJ=Wagoneer(1984-86), Cherokee(1984-86)

AR = Use as Required - = Non Illustrated Part P.A.R. = Paint as Required

« RETURN TO GROUP INDEX

HOUSING, STEERING COLUMN UPPER WITH COLUMN GEAR SHIFT, WITHOUT TILT WHEEL COMANCHE
Figure 19-2400

81J19 2400

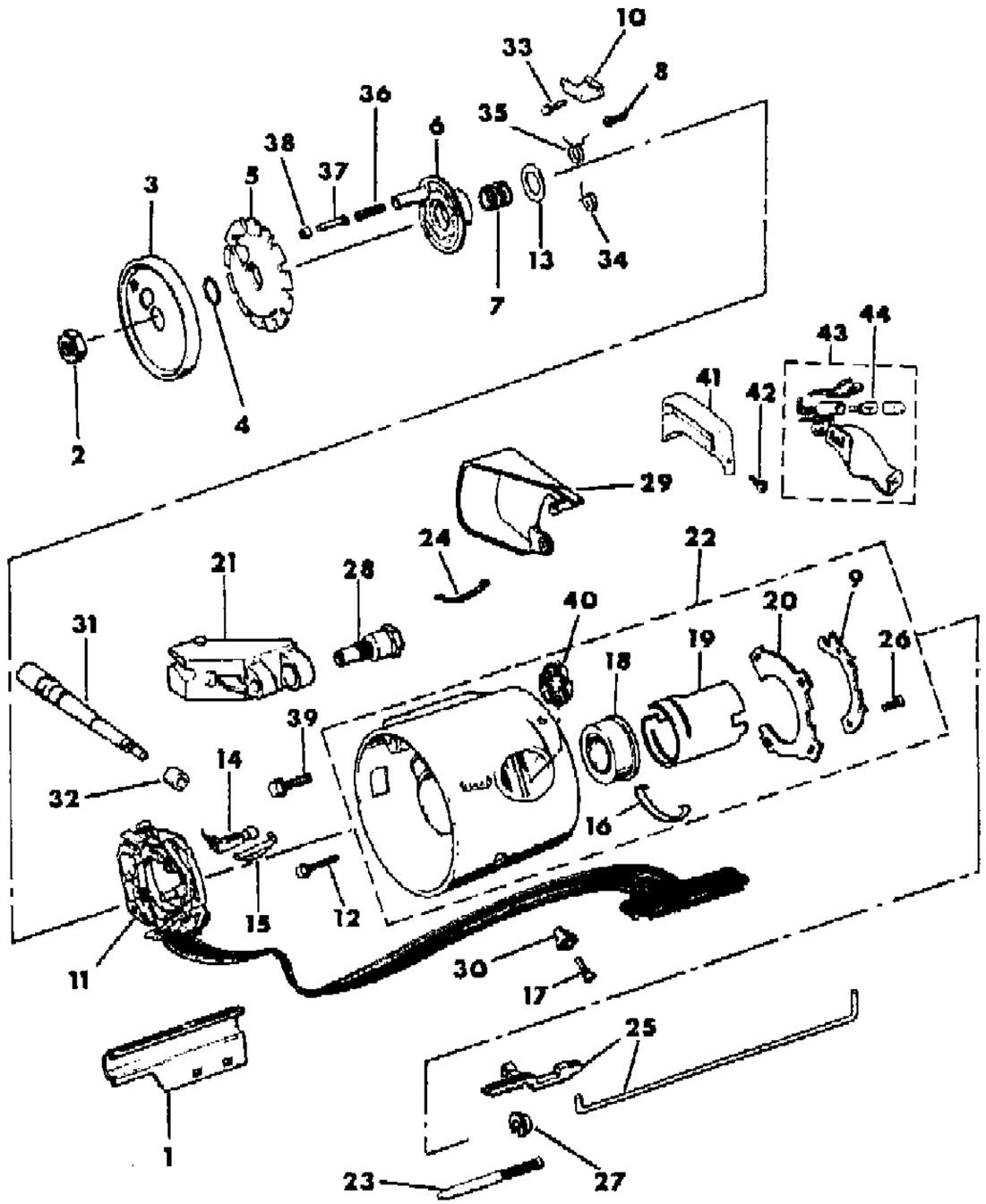

ITEM	PART NUMBER	QTY	BODY	MODEL	DESCRIPTION
1	8350 2566	1			PROTECTOR
2	J420 0414	1			NUT
3	J322 8743	1			COVER, Shift Lock
4	J320 8377	2			RING
5	J812 7831	1			LOCK
6	J448 7711	1			CAM, Cancelling
7	J448 7765	1			SPRING
8	J448 8301	3			SCREW
9	J448 7799	1			GATE
10	8351 0088	1			ARM, Switch Actuator
11	J322 9970	1			SWITCH, Turn Signal
12	J448 7761	4			SCREW
13	J320 8008	1			WASHER
14	J321 1423	1			SWITCH, Key Buzzer
15	J448 7713	1			CLIP
16	8350 2552	1			CONTACT ***
17	3420 2670	1			SCREW
18	J812 7850	1			BEARING ASSEMBLY
19	8350 2551	1			BUSHING
20	J813 4703	1			RETAINER
21					SWITCH ASSEMBLY, Wiper
	5600 0031	1			Without Intermittent Wipers
	5600 0032	1			With Intermittent Wipers
22	8350 2763	1			HOUSING ASSEMBLY
23	J448 7897	1			BOLT
24	J448 7774	1			SPRING
25	8350 2610	1			RACK PACKAGE
26	J813 3553	2			SCREW
27	J448 7777	1			WASHER
28	J813 3538	1			PIN
29	8350 2553	1			COVER
30	5200 3425	1			KNOB, Hazard Warning
31					LEVER, Turn Signal
	5600 0432	1			Without Intermittent Wipers
					With Intermittent Wipers
	5600 0433	1			Without Cruise Control
	5600 0034	1			With Cruise Control
32	5600 2285	1			INSULATOR
33	J400 1267	1			SCREW

MODEL CODES

16=Cherokee 2 Dr.(1981-83)
17=Cherokee 2 Dr.(1981-83)
73=Cherokee 2WD-2 Dr.(1984-86)
74=Cherokee 2WD-4 Dr.(1984-86)
18=Cherokee 4 Dr.(1981-83)
77=Cherokee 4WD-2 Dr.(1984-86)
78=Cherokee 4WD-4 Dr.(1984-86)
85=CJ-5 (1981-83)
86=CJ-6(1981)
87=CJ-7(1981-86)
88=CJ-8, Scrambler(1981-86)
64=Comanche 2WD-6 Ft. Box(1986)
66=Comanche 2WD-7 Ft. Box(1986)
63=Comanche 4WD-6 Ft. Box(1986)
65=Comanche 4WD-7 Ft. Box(1986)
15=Grand Wagoneer 4 Dr.(1984-86)
25=J-10 Truck 7 Ft. Box(1981-84)
26=J10 Truck 8 Ft. Box(1981-86)
27=J-20 Truck 8 Ft. Box(1981-86)
15=Wagoneer 4 Dr.(1981-83)
75=Wagoneer 4WD-4 Dr.(1984-86)

BODY
CJ=CJ-5, CJ-6, CJ-7, CJ-8, Scrambler(1981-86)
MJ=Comanche Pickup(1986)

STYLES
SJ=Wagoneer(1981-83), Grand Wagoneer(1984-86), Cherokee(1981-83), J-10, J-20(1981-86)
XJ=Wagoneer(1984-86), Cherokee(1984-86)

AR = Use as Required - = Non Illustrated Part P.A.R. = Paint as Required

HOUSING, STEERING COLUMN UPPER WITH COLUMN GEAR SHIFT, WITHOUT TILT WHEEL COMANCHE
Figure 19-2400

81J19 2400

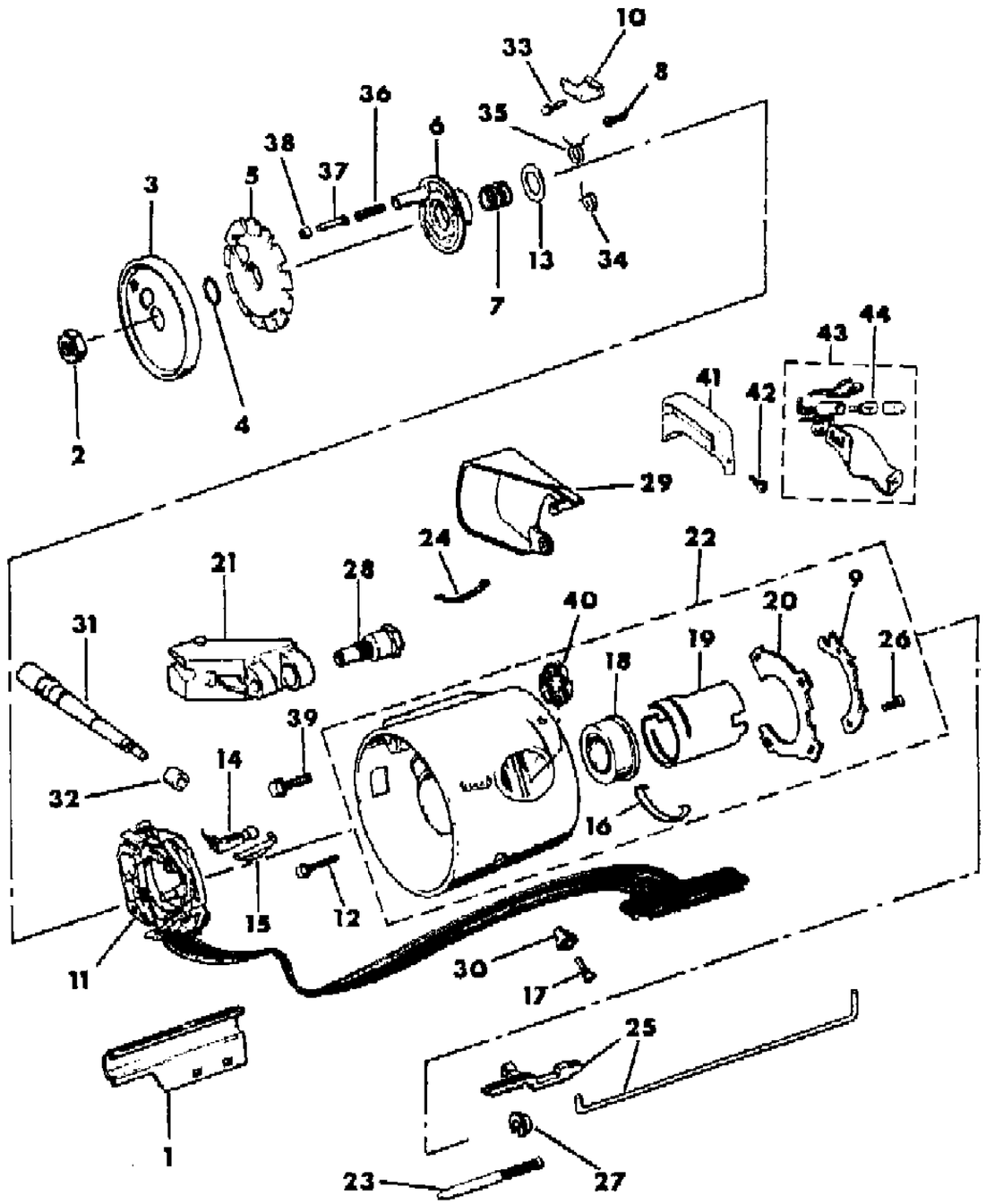

ITEM	PART NUMBER	QTY	BODY	MODEL	DESCRIPTION
34	J812 9317	1			SPRING, Lower, Left
35	J812 9335	1			SPRING, Upper, Right
36	J318 7255	1			SPRING
37	J318 7249	1			PIN
38	J318 7257	1			RETAINER
39	8350 2102	1			SCREW
40	J812 0097	1			SECTOR
41	8350 2554	1			BEZEL, Gear Selector
42	J400 4812	2			SCREW
43	8350 2550	1			BRACKET
44	S943 6970	1			BULB

MODEL CODES
16=Cherokee 2 Dr.(1981-83)
17=Cherokee 2 Dr.(1981-83)
73=Cherokee 2WD-2 Dr.(1984-86)
74=Cherokee 2WD-4 Dr.(1984-86)
18=Cherokee 4 Dr.(1981-83)
77=Cherokee 4WD-2 Dr.(1984-86)
78=Cherokee 4WD-4 Dr.(1984-86)
85=CJ-5 (1981-83)
86=CJ-6(1981)
87=CJ-7(1981-86)
88=CJ-8, Scrambler(1981-86)
64=Comanche 2WD-6 Ft. Box(1986)
66=Comanche 2WD-7 Ft. Box(1986)
63=Comanche 4WD-6 Ft. Box(1986)
65=Comanche 4WD-7 Ft. Box(1986)
15=Grand Wagoneer 4 Dr.(1984-86)
25=J-10 Truck 7 Ft. Box(1981-84)
26=J10 Truck 8 Ft. Box(1981-86)
27=J-20 Truck 8 Ft. Box(1981-86)
15=Wagoneer 4 Dr.(1981-83)
75=Wagoneer 4WD-4 Dr.(1984-86)

BODY
CJ=CJ-5, CJ-6, CJ-7, CJ-8, Scrambler(1981-86)
MJ=Comanche Pickup(1986)

STYLES
SJ=Wagoneer(1981-83), Grand Wagoneer(1984-86), Cherokee(1981-83), J-10, J-20(1981-86)
XJ=Wagoneer(1984-86), Cherokee(1984-86)

AR = Use as Required - = Non Illustrated Part P.A.R. = Paint as Required

« RETURN TO GROUP INDEX

HOUSING, STEERING COLUMN LOWER WITH COLUMN GEAR SHIFT, WITHOUT TILT WHEEL COMANCHE
Figure 19-2500

81J19 2500

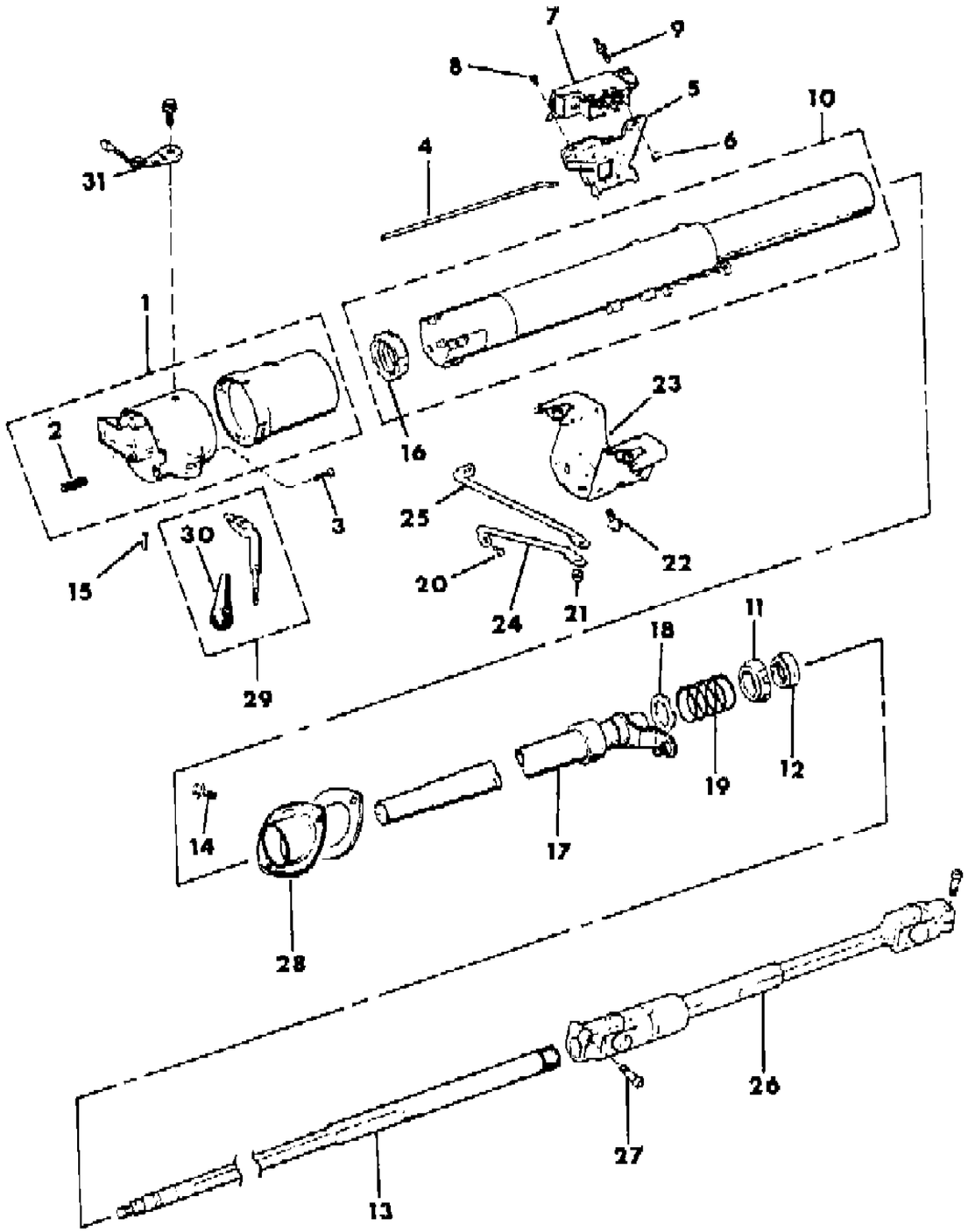

ITEM	PART NUMBER	QTY	BODY	MODEL	DESCRIPTION
1	8350 2548	1			BOWL, Shift
2	J448 7791	1			SPRING
3	J448 8301	3			SCREW
4	8350 2567	1			ROD, Dimmer Switch Actuator
5	J323 9703	1			SWITCH, Headlamp Dimmer
6	J012 0361	1			NUT
7	J325 0576	1			SWITCH, Ignition Lock
8	J448 7772	1			SCREW
9	J813 3546	1			STUD
10	8350 2556	1			JACKET ASSEMBLY
11	8350 2561	1			ADAPTER
12	J448 6713	1			BEARING
13	8350 2100	1			SHAFT, Steering Column Upper
14	3420 1193	2			SCREW
15	J400 3925	1			PIN
16	J813 3557	1			BEARING
17	8350 2559	1			TUBE ASSEMBLY, Shift
18	J448 7779	1			WASHER
19	8350 2569	1			SPRING
20	1150 2685	2			BOLT
21	1150 2812	2			NUT
22	1150 2764	4			SCREW
23	5200 0399	1			BRACKET
24	5200 1375	1			ROD, Short
25	5200 1376	1			ROD, Long
26					SHAFT, Steering Column Lower
	5200 1948	1			With Power Steering
	5200 1947	1			Without Power Steering
27	J420 0400	2			BOLT
28	8350 2563	1			PLATE
29	J321 6464	1			LEVER, Gear Shift
30	J321 6462	1			KNOB
31	8350 2564	1			INDICATOR, Shift ***

MODEL CODES

16=Cherokee 2 Dr.(1981-83)
17=Cherokee 2 Dr.(1981-83)
73=Cherokee 2WD-2 Dr.(1984-86)
74=Cherokee 2WD-4 Dr.(1984-86)
18=Cherokee 4 Dr.(1981-83)
77=Cherokee 4WD-2 Dr.(1984-86)
78=Cherokee 4WD-4 Dr.(1984-86)
85=CJ-5 (1981-83)
86=CJ-6(1981)
87=CJ-7(1981-86)
88=CJ-8, Scrambler(1981-86)
64=Comanche 2WD-6 Ft. Box(1986)
66=Comanche 2WD-7 Ft. Box(1986)
63=Comanche 4WD-6 Ft. Box(1986)
65=Comanche 4WD-7 Ft. Box(1986)
15=Grand Wagoneer 4 Dr.(1984-86)
25=J-10 Truck 7 Ft. Box(1981-84)
26=J10 Truck 8 Ft. Box(1981-86)
27=J-20 Truck 8 Ft. Box(1981-86)
15=Wagoneer 4 Dr.(1981-83)
75=Wagoneer 4WD-4 Dr.(1984-86)

BODY
CJ=CJ-5, CJ-6, CJ-7, CJ-8, Scrambler(1981-86)
MJ=Comanche Pickup(1986)

STYLES
SJ=Wagoneer(1981-83), Grand Wagoneer(1984-86), Cherokee(1981-83), J-10, J-20(1981-86)
XJ=Wagoneer(1984-86), Cherokee(1984-86)

AR = Use as Required - = Non Illustrated Part P.A.R. = Paint as Required

« RETURN TO GROUP INDEX

HOUSING, STEERING COLUMN UPPER WITH COLUMN GEAR SHIFT, WITH TILT WHEEL COMANCHE
Figure 19-2600

81J19 2600

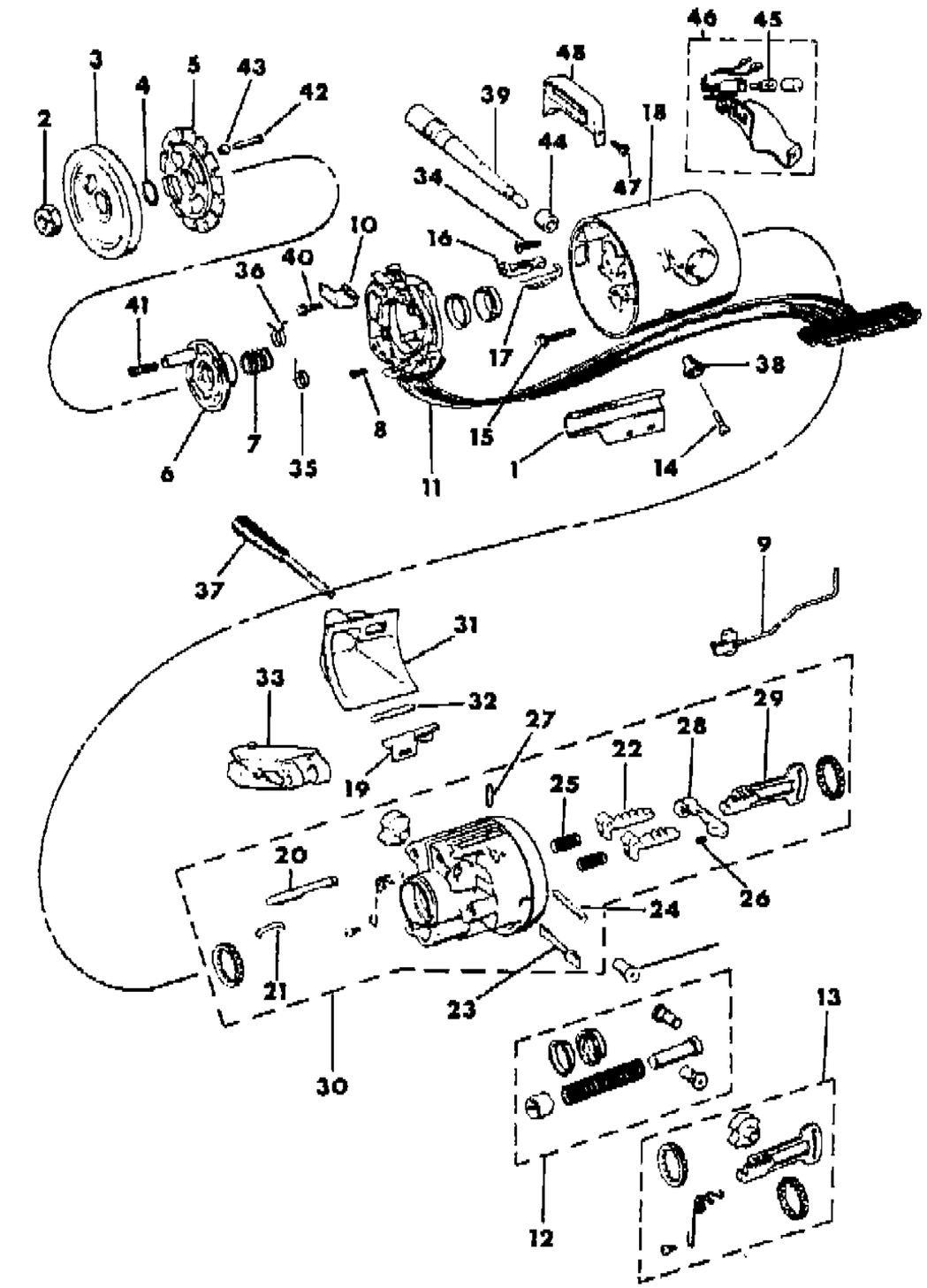

ITEM	PART NUMBER	QTY	BODY	MODEL	DESCRIPTION
1	8350 2566	1			PROTECTOR
2	J420 0414	1			NUT
3	J322 8743	1			COVER, Shift Lock
4	J320 8377	2			RING
5	J812 7874	1			LOCK
6	J448 7816	1			CAM, Cancelling
7	J812 2485	1			SPRING
8	J448 8301	3			SCREW
9	8350 2573	1			ACTUATOR ASSEMBLY, Ignition Switch ***
10	8350 1575	1			ARM, Switch Actuator
11	J322 9970	1			SWITCH, Turn Signal
12	8351 0054	1			PARTS PACKAGE
13	8351 0055	1			RACK PACKAGE
14	3420 2670	1			SCREW
15	J813 3572	3			SCREW
16	J321 1424	1			SWITCH, Key Buzzer
17	J448 7853	1			CLIP
18	8350 2096	1			COVER, Steering Column Housing
19	J813 3570	1			ACTUATOR, Dimmer Switch Rod
20	J448 7819	1			BOLT
21	J448 7831	1			SPRING
22					SHOE
	8350 2583	1			Left
	J448 7828	1			Right
23	J813 4191	1			SHAFT
24	J448 7822	1			PIN
25	J448 7832	2			SPRING
26	J320 8047	1			SPRING
27	J320 8043	1			PIN
28	J813 3567	1			LEVER
29	J812 7870	1			RACK
30	8350 2582	1			HOUSING, Steering Column
31	J813 4704	1			CAP
32	J813 3565	1			PIN
33	5600 0033	1			SWITCH ASSEMBLY, Intermittent Wiper
34	8350 2103	1			SCREW
35	J812 9317	1			SPRING, Lower, Left
36	J812 9335	1			SPRING, Upper, Right
37	5600 0108	1			LEVER, Wheel Release

MODEL CODES

16=Cherokee 2 Dr.(1981-83)
17=Cherokee 2 Dr.(1981-83)
73=Cherokee 2WD-2 Dr.(1984-86)
74=Cherokee 2WD-4 Dr.(1984-86)
18=Cherokee 4 Dr.(1981-83)
77=Cherokee 4WD-2 Dr.(1984-86)
78=Cherokee 4WD-4 Dr.(1984-86)
85=CJ-5 (1981-83)
86=CJ-6(1981)
87=CJ-7(1981-86)
88=CJ-8, Scrambler(1981-86)
64=Comanche 2WD-6 Ft. Box(1986)
66=Comanche 2WD-7 Ft. Box(1986)
63=Comanche 4WD-6 Ft. Box(1986)
65=Comanche 4WD-7 Ft. Box(1986)
15=Grand Wagoneer 4 Dr.(1984-86)
25=J-10 Truck 7 Ft. Box(1981-84)
26=J10 Truck 8 Ft. Box(1981-86)
27=J-20 Truck 8 Ft. Box(1981-86)
15=Wagoneer 4 Dr.(1981-83)
75=Wagoneer 4WD-4 Dr.(1984-86)

BODY
CJ=CJ-5, CJ-6, CJ-7, CJ-8, Scrambler(1981-86)
MJ=Comanche Pickup(1986)

STYLES
SJ=Wagoneer(1981-83), Grand Wagoneer(1984-86), Cherokee(1981-83), J-10, J-20(1981-86)
XJ=Wagoneer(1984-86), Cherokee(1984-86)

AR = Use as Required - = Non Illustrated Part P.A.R. = Paint as Required

« RETURN TO GROUP INDEX »

HOUSING, STEERING COLUMN UPPER WITH COLUMN GEAR SHIFT, WITH TILT WHEEL COMANCHE
Figure 19-2600

81J19 2600

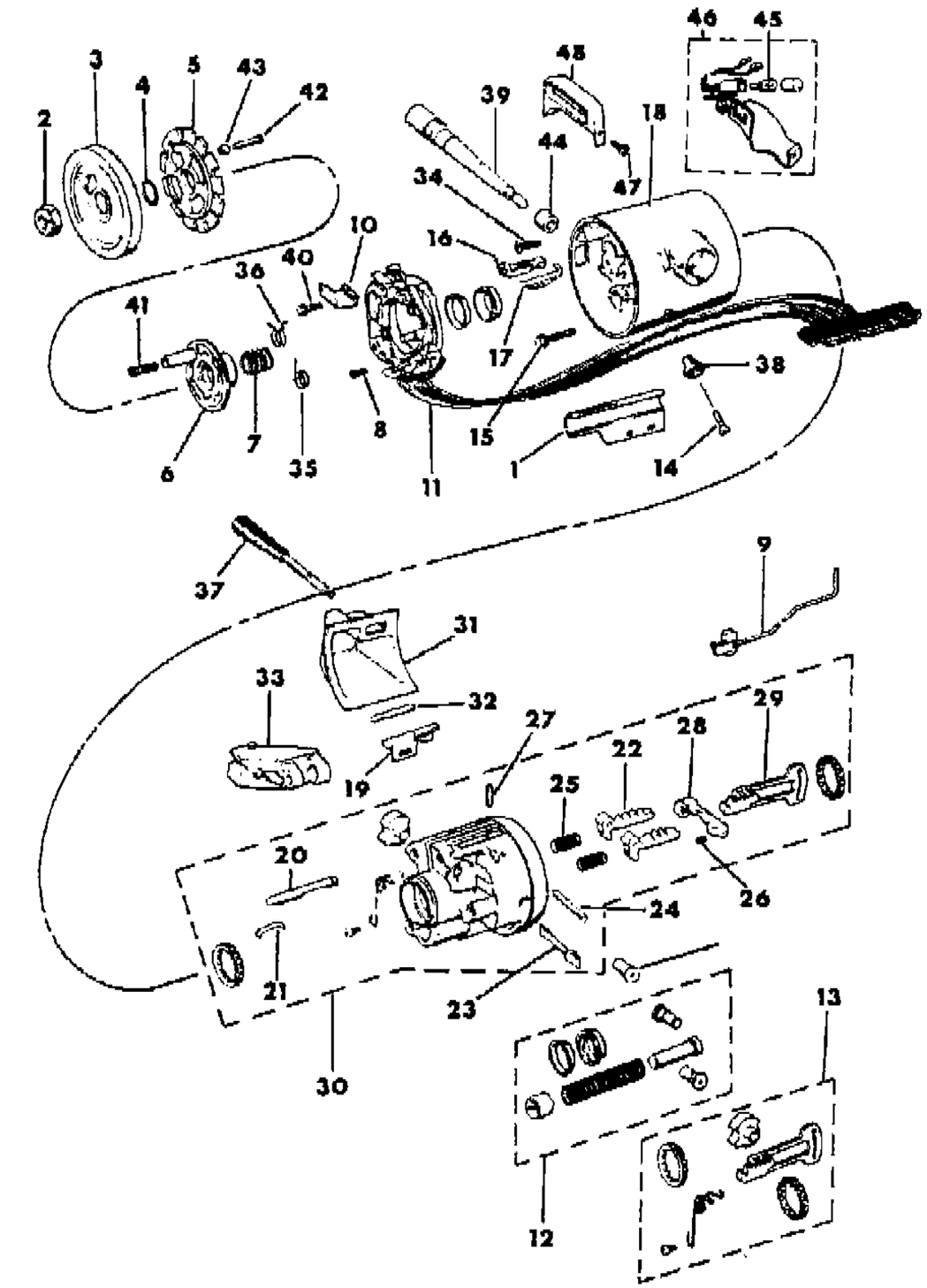

ITEM	PART NUMBER	QTY	BODY	MODEL	DESCRIPTION
38	J323 8343	1			KNOB, Hazard Warning
39					LEVER, Turn Signal
	5600 0433	1			Without Cruise Control
	5600 0034	1			With Cruise Control
40	J400 1267	1			SCREW
41	J318 7255	1			SPRING
42	J318 7249	1			PIN
43	J318 7257	1			RETAINER
44	5600 2285	1			INSULATOR
45	S943 6970	1			BULB
46	8350 2549	1			BRACKET
47	3420 1314	1			SCREW
48	8350 2554	1			BEZEL

MODEL CODES

16=Cherokee 2 Dr.(1981-83)
17=Cherokee 2 Dr.(1981-83)
73=Cherokee 2WD-2 Dr.(1984-86)
74=Cherokee 2WD-4 Dr.(1984-86)
18=Cherokee 4 Dr.(1981-83)
77=Cherokee 4WD-2 Dr.(1984-86)
78=Cherokee 4WD-4 Dr.(1984-86)
85=CJ-5 (1981-83)
86=CJ-6(1981)
87=CJ-7(1981-86)
88=CJ-8, Scrambler(1981-86)
64=Comanche 2WD-6 Ft. Box(1986)
66=Comanche 2WD-7 Ft. Box(1986)
63=Comanche 4WD-6 Ft. Box(1986)
65=Comanche 4WD-7 Ft. Box(1986)
15=Grand Wagoneer 4 Dr.(1984-86)
25=J-10 Truck 7 Ft. Box(1981-84)
26=J10 Truck 8 Ft. Box(1981-86)
27=J-20 Truck 8 Ft. Box(1981-86)
15=Wagoneer 4 Dr.(1981-83)
75=Wagoneer 4WD-4 Dr.(1984-86)

BODY
CJ=CJ-5, CJ-6, CJ-7, CJ-8, Scrambler(1981-86)
MJ=Comanche Pickup(1986)

STYLES
SJ=Wagoneer(1981-83), Grand Wagoneer(1984-86), Cherokee(1981-83), J-10, J-20(1981-86)
XJ=Wagoneer(1984-86), Cherokee(1984-86)

AR = Use as Required - = Non Illustrated Part P.A.R. = Paint as Required

« RETURN TO GROUP INDEX

HOUSING, STEERING COLUMN LOWER WITH COLUMN GEAR SHIFT, WITH TILT WHEEL COMANCHE
Figure 19-2700

81J19 2700

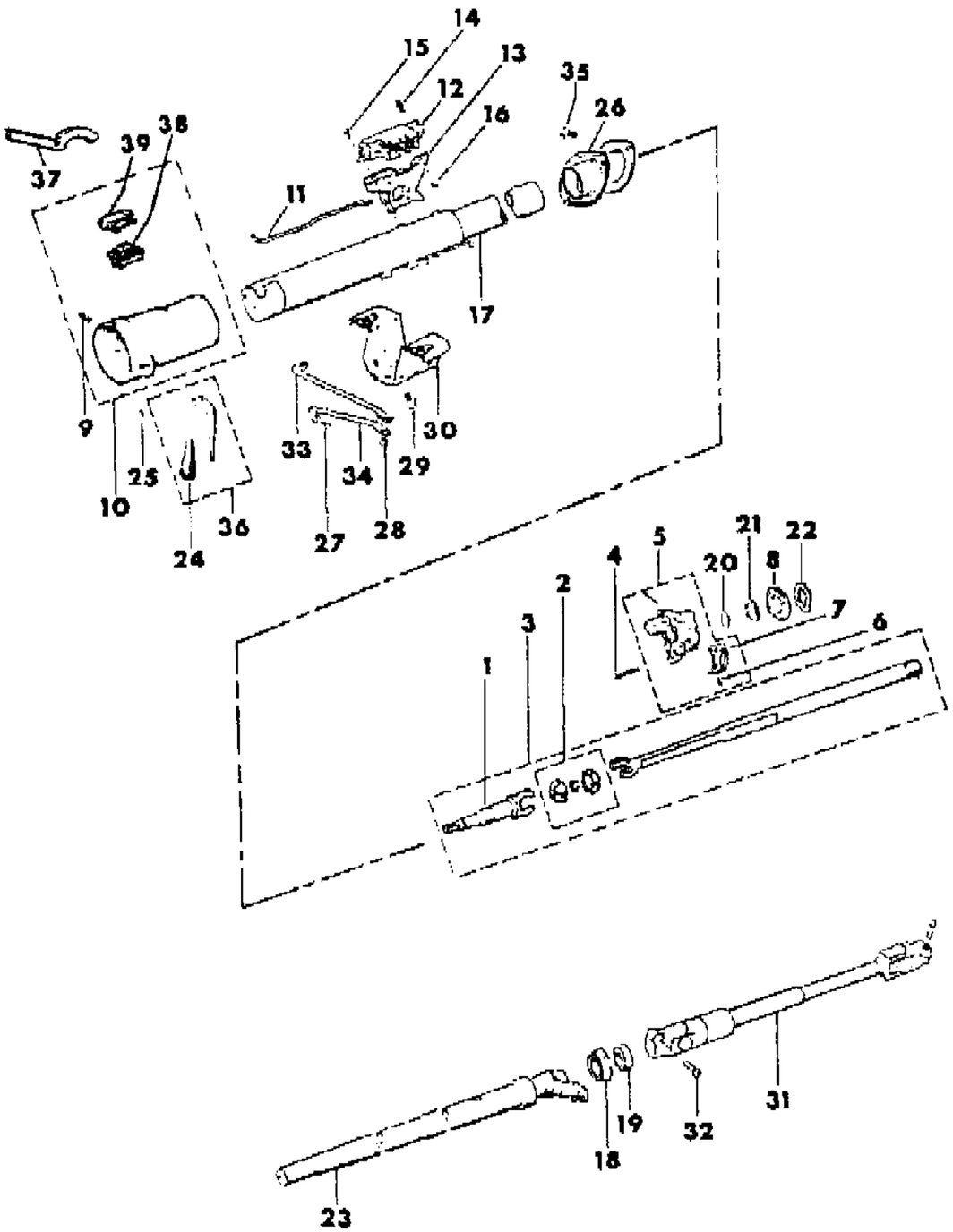

ITEM	PART NUMBER	QTY	BODY	MODEL	DESCRIPTION
1	J812 8888	1			SHAFT, Steering Column Upper
2	8351 0056	1			SPHERE
3	8350 2101	1			SHAFT ASSEMBLY, Steering Column Upper
4	J448 7867	4			SCREW
5	8350 2560	1			SUPPORT
6	J320 8210	2			SCREW
7	J319 5616	1			GATE, Shift Lever
8	J448 7860	1			PLATE
9	J812 0251	1			SPRING
10	8350 2570	1			SHROUD, Shift Bowl
11	8350 2568	1			ROD, Dimmer Switch Actuator
12	J325 0575	1			SWITCH, Ignition Lock
13	J323 9703	1			SWITCH, Headlamp Dimmer
14	J813 3546	1			STUD
15	J448 7772	1			SCREW
16	J012 0361	1			NUT
17	8350 2557	1			JACKET ASSEMBLY
18	8350 2561	1			ADAPTER
19	J448 6713	1			BEARING
20	J448 7864	1			RING, Shift Tube Retaining
21	J448 7872	1			WASHER, Thrust
22	J448 7873	1			WASHER, Wave
23	8350 2558	1			TUBE ASSEMBLY, Shift
24	J321 6462	1			KNOB
25	J400 3925	1			PIN
26	8350 2563	1			PLATE
27	1150 2685	2			BOLT
28	1150 2812	2			NUT
29	1150 2764	4			SCREW
30	5200 0399	1			BRACKET
31					SHAFT, Steering Column Lower
	5200 1948	1			With Power Steering
	5200 1947	1			Without Power Steering
32	J420 0400	2			BOLT
33	5200 1376	1			ROD, Long
34	5200 1375	1			ROD, Short
35	3420 1193	2			SCREW
36	5200 2086	1			LEVER, Gear Shift
37	8350 2565	1			INDICATOR, Shift ***

MODEL CODES
16=Cherokee 2 Dr.(1981-83)
17=Cherokee 2 Dr.(1981-83)
73=Cherokee 2WD-2 Dr.(1984-86)
74=Cherokee 2WD-4 Dr.(1984-86)
18=Cherokee 4 Dr.(1981-83)
77=Cherokee 4WD-2 Dr.(1984-86)
78=Cherokee 4WD-4 Dr.(1984-86)
85=CJ-5 (1981-83)
86=CJ-6(1981)
87=CJ-7(1981-86)
88=CJ-8, Scrambler(1981-86)
64=Comanche 2WD-6 Ft. Box(1986)
66=Comanche 2WD-7 Ft. Box(1986)
63=Comanche 4WD-6 Ft. Box(1986)
65=Comanche 4WD-7 Ft. Box(1986)
15=Grand Wagoneer 4 Dr.(1984-86)
25=J-10 Truck 7 Ft. Box(1981-84)
26=J10 Truck 8 Ft. Box(1981-86)
27=J-20 Truck 8 Ft. Box(1981-86)
15=Wagoneer 4 Dr.(1981-83)
75=Wagoneer 4WD-4 Dr.(1984-86)

BODY
CJ=CJ-5, CJ-6, CJ-7, CJ-8, Scrambler(1981-86)
MJ=Comanche Pickup(1986)

STYLES
SJ=Wagoneer(1981-83), Grand Wagoneer(1984-86), Cherokee(1981-83), J-10, J-20(1981-86)
XJ=Wagoneer(1984-86), Cherokee(1984-86)

AR = Use as Required - = Non Illustrated Part P.A.R. = Paint as Required

« RETURN TO GROUP INDEX »

HOUSING, STEERING COLUMN LOWER WITH COLUMN GEAR SHIFT, WITH TILT WHEEL COMANCHE
Figure 19-2700

81J19 2700

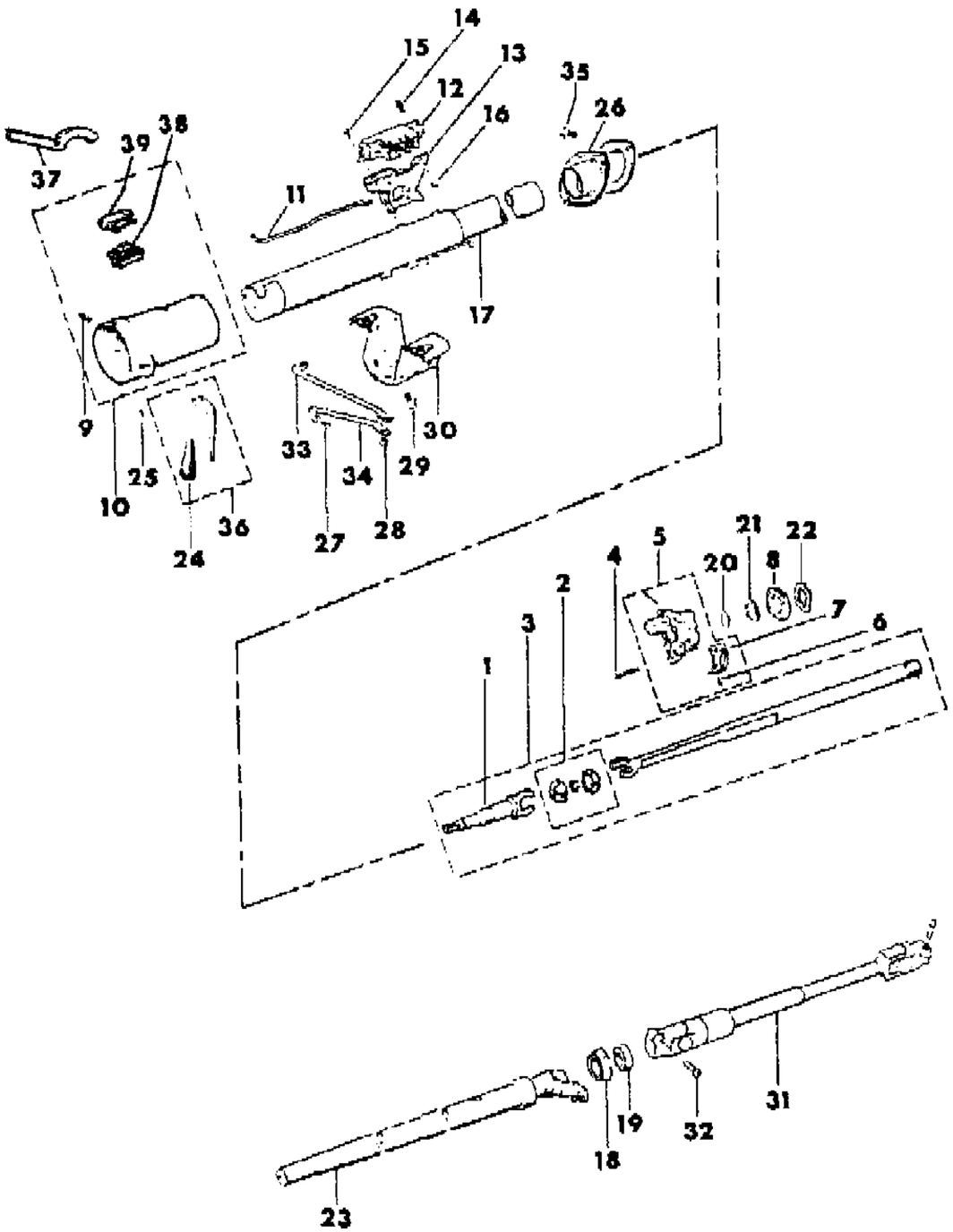

ITEM	PART NUMBER	QTY	BODY	MODEL	DESCRIPTION
38	8350 2571	1			BRACKET
39	8350 2572	1			CLIP

MODEL CODES

16=Cherokee 2 Dr.(1981-83)	78=Cherokee 4WD-4 Dr.(1984-86)	64=Comanche 2WD-6 Ft. Box(1986)	25=J-10 Truck 7 Ft. Box(1981-84)
17=Cherokee 2 Dr.(1981-83)	85=CJ-5 (1981-83)	66=Comanche 2WD-7 Ft. Box(1986)	26=J10 Truck 8 Ft. Box(1981-86)
73=Cherokee 2WD-2 Dr.(1984-86)	86=CJ-6(1981)	63=Comanche 4WD-6 Ft. Box(1986)	27=J-20 Truck 8 Ft. Box(1981-86)
74=Cherokee 2WD-4 Dr.(1984-86)	87=CJ-7(1981-86)	65=Comanche 4WD-7 Ft. Box(1986)	15=Wagoneer 4 Dr.(1981-83)
18=Cherokee 4 Dr.(1981-83)	88=CJ-8, Scrambler(1981-86)	15=Grand Wagoneer 4 Dr.(1984-86)	75=Wagoneer 4WD-4 Dr.(1984-86)
77=Cherokee 4WD-2 Dr.(1984-86)			

BODY
CJ=CJ-5, CJ-6, CJ-7, CJ-8, Scrambler(1981-86)
MJ=Comanche Pickup(1986)

STYLES
SJ=Wagoneer(1981-83), Grand Wagoneer(1984-86), Cherokee(1981-83), J-10, J-20(1981-86)
XJ=Wagoneer(1984-86), Cherokee(1984-86)

AR = Use as Required - = Non Illustrated Part P.A.R. = Paint as Required

« RETURN TO GROUP INDEX

COLUMN ASSEMBLY, STEERING AND MOUNTING BRACKETS SJ CHEROKEE, SJ WAGONEER, J10, J20
Figure 19-2800

81J19 2800

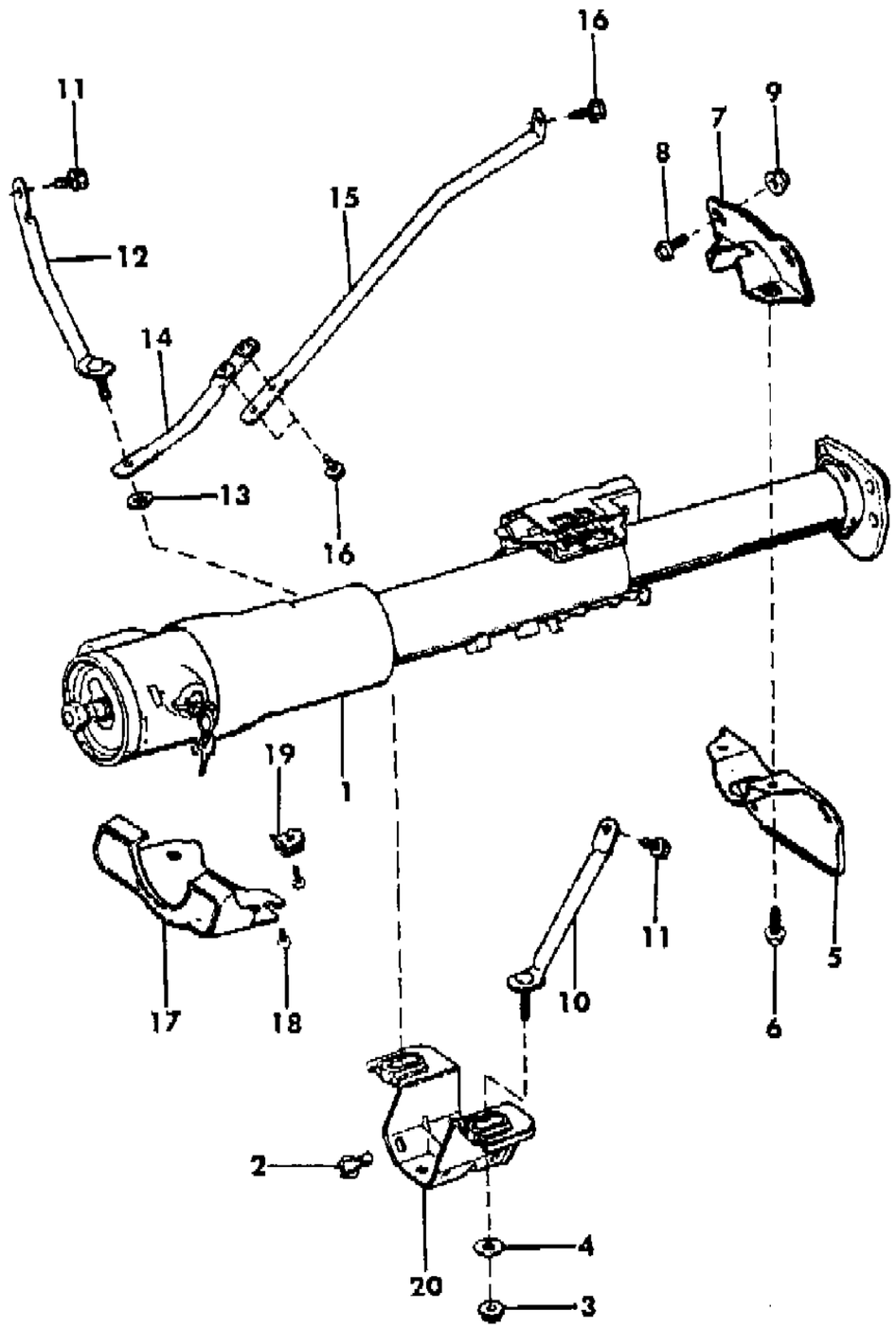

ITEM	PART NUMBER	QTY	BODY	MODEL	DESCRIPTION
1					COLUMN ASSEMBLY, Steering
					With Floor Shift
					Without Tilt Wheel
	J535 8673	1			1981-83
	J536 4768	1			1984
	5200 2138	1			1985
	5200 2374	1			1986
	J535 9107	1			1981-84: EXPORT
	5200 2141	1			1985: EXPORT
	J805 0726	1			1982-86: EXPORT, Right Hand Drive
					With Tilt Wheel
	J536 3503	1			1982-83
	J536 4769	1			1984
	5200 2142	1			1985
	5200 2376	1			1986: With Intermittent Wipers
	5200 2420	1			1986: Without Intermittent Wipers
	J536 3504	1			1982-84: EXPORT
	5200 2143	1			1985-86: EXPORT
	J805 0727	1			1982-86: EXPORT, Right Hand Drive
					With Column Gear Shift
					Without Tilt Wheel
	J535 9884	1			1981-83
	J536 4766	1			1984
	5200 2136	1			1985
	J535 9885	1			1981-84: EXPORT
	5200 2137	1			1985: EXPORT
					With Tilt Wheel
	J535 9886	1			1981-83
	J536 4767	1			1984
	5200 2139	1			1985
	5200 1983	1			1986, With Intermittent Wipers
	5200 1982	1			1986: Without Intermittent Wipers
	J535 9887	1			1981-84: EXPORT
	5200 2140	1			1985: EXPORT
2	1150 2764	4			BOLT
3	J400 4747	2			NUT
4	J012 0391	2			WASHER
5	J319 6897	1			PLATE
6	J027 3573	2			BOLT

MODEL CODES

16=Cherokee 2 Dr.(1981-83)	78=Cherokee 4WD-4 Dr.(1984-86)	64=Comanche 2WD-6 Ft. Box(1986)	25=J-10 Truck 7 Ft. Box(1981-84)
17=Cherokee 2 Dr.(1981-83)	85=CJ-5 (1981-83)	66=Comanche 2WD-7 Ft. Box(1986)	26=J10 Truck 8 Ft. Box(1981-86)
73=Cherokee 2WD-2 Dr.(1984-86)	86=CJ-6(1981)	63=Comanche 4WD-6 Ft. Box(1986)	27=J-20 Truck 8 Ft. Box(1981-86)
74=Cherokee 2WD-4 Dr.(1984-86)	87=CJ-7(1981-86)	65=Comanche 4WD-7 Ft. Box(1986)	15=Wagoneer 4 Dr.(1981-83)
18=Cherokee 4 Dr.(1981-83)	88=CJ-8, Scrambler(1981-86)	15=Grand Wagoneer 4 Dr.(1984-86)	75=Wagoneer 4WD-4 Dr.(1984-86)
77=Cherokee 4WD-2 Dr.(1984-86)			

BODY
CJ=CJ-5, CJ-6, CJ-7, CJ-8, Scrambler(1981-86)
MJ=Comanche Pickup(1986)

STYLES
SJ=Wagoneer(1981-83), Grand Wagoneer(1984-86), Cherokee(1981-83), J-10, J-20(1981-86)
XJ=Wagoneer(1984-86), Cherokee(1984-86)

AR = Use as Required - = Non Illustrated Part P.A.R. = Paint as Required

« RETURN TO GROUP INDEX »

COLUMN ASSEMBLY, STEERING AND MOUNTING BRACKETS SJ CHEROKEE, SJ WAGONEER, J10, J20
Figure 19-2800

81J19 2800

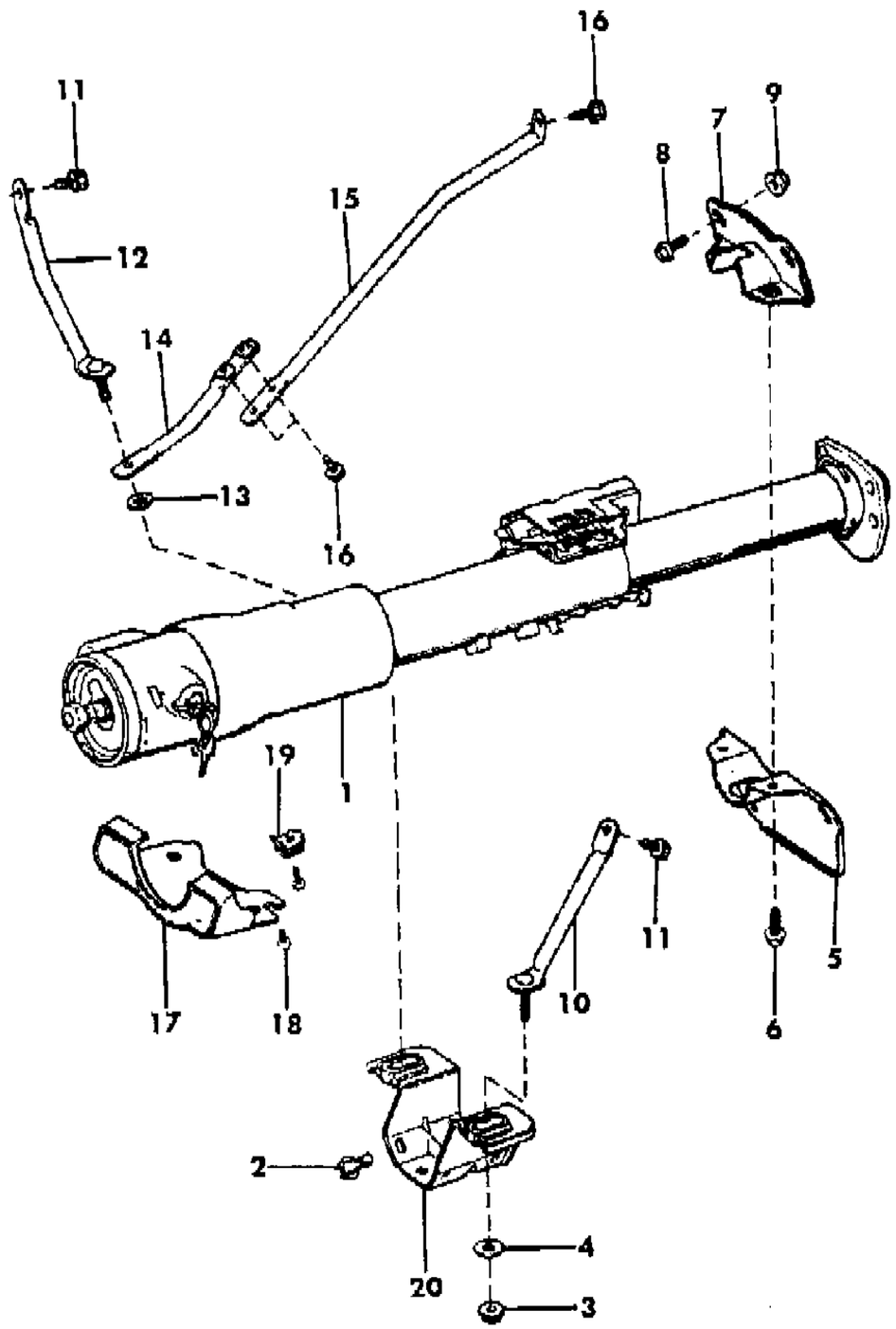

ITEM	PART NUMBER	QTY	BODY	MODEL	DESCRIPTION
7	J536 3488	1			PLATE
8	J400 4520	4			BOLT
9	J400 4866	4			NUT
10	J575 2703	1			ROD
11	J400 5063	2			SCREW
12	J575 2788	1			ROD
13	J400 3084	1			NUT
14	J576 1741	1			ROD
15	J576 1740	1			ROD
16	J400 1933	3			SCREW
17	5500 9633	1			COVER, P.A.R.
18	3420 1440	4			SCREW
19	3420 1820	2			NUT
20	J535 1229	1			BRACKET

MODEL CODES

16=Cherokee 2 Dr.(1981-83)
17=Cherokee 2 Dr.(1981-83)
73=Cherokee 2WD-2 Dr.(1984-86)
74=Cherokee 2WD-4 Dr.(1984-86)
18=Cherokee 4 Dr.(1981-83)
77=Cherokee 4WD-2 Dr.(1984-86)
78=Cherokee 4WD-4 Dr.(1984-86)
85=CJ-5 (1981-83)
86=CJ-6(1981)
87=CJ-7(1981-86)
88=CJ-8, Scrambler(1981-86)
64=Comanche 2WD-6 Ft. Box(1986)
66=Comanche 2WD-7 Ft. Box(1986)
63=Comanche 4WD-6 Ft. Box(1986)
65=Comanche 4WD-7 Ft. Box(1986)
15=Grand Wagoneer 4 Dr.(1984-86)
25=J-10 Truck 7 Ft. Box(1981-84)
26=J10 Truck 8 Ft. Box(1981-86)
27=J-20 Truck 8 Ft. Box(1981-86)
15=Wagoneer 4 Dr.(1981-83)
75=Wagoneer 4WD-4 Dr.(1984-86)

BODY
CJ=CJ-5, CJ-6, CJ-7, CJ-8, Scrambler(1981-86)
MJ=Comanche Pickup(1986)

STYLES
SJ=Wagoneer(1981-83), Grand Wagoneer(1984-86), Cherokee(1981-83), J-10, J-20(1981-86)
XJ=Wagoneer(1984-86), Cherokee(1984-86)

AR = Use as Required - = Non Illustrated Part P.A.R. = Paint as Required

« RETURN TO GROUP INDEX

HOUSING, STEERING COLUMN UPPER WITH FLOOR GEAR SHIFT, WITHOUT TILT WHEEL SJ CHEROKEE, SJ WAGONEER, J10, J20
Figure 19-2900

81J19 2900

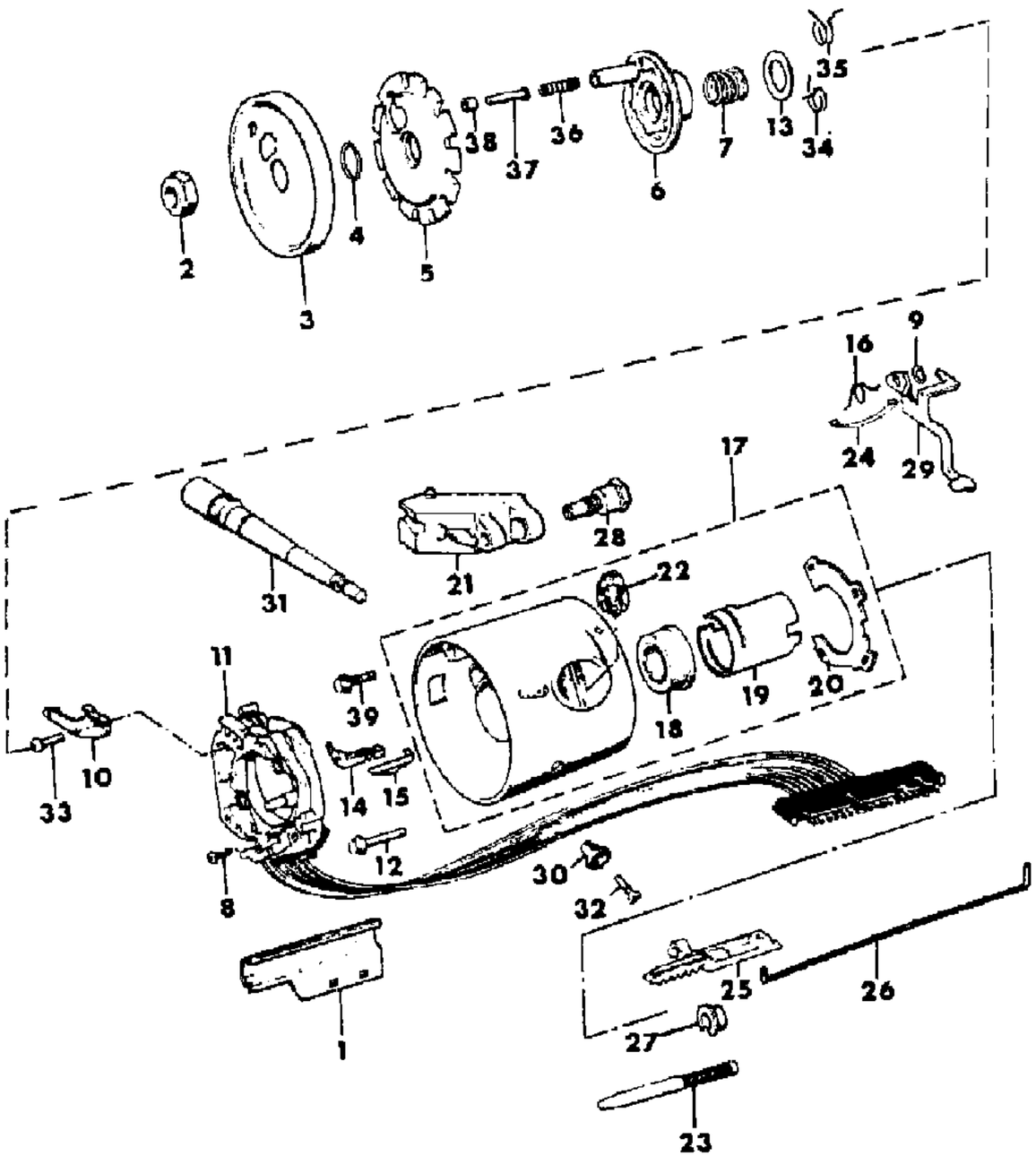

ITEM	PART NUMBER	QTY	BODY	MODEL	DESCRIPTION
1	8350 2566	1			PROTECTOR
2	J420 0414	1			NUT
3	J322 8743	1			COVER
4	J320 8377	1			RING, Snap
5	J812 7831	1			PLATE, Lock
6	J448 7711	1			CAM, Cancelling
7	J448 7765	1			SPRING
8	J448 8301	3			SCREW
9	J812 0186	1			WASHER
10					ARM, Actuator
	8351 0088	1			
	J813 3535	1			EXPORT, Right Hand Drive
11					SWITCH, Directional
	J322 9970	1			1981-85
	5600 2011	1			1986
	J322 9970	1			1986: EXPORT, Right Hand Drive
12	J448 7761	4			SCREW
13	J320 8008	1			WASHER
14	J321 1423	1			SWITCH, Buzzer
15	J448 7713	1			CLIP
16	J812 0185	1			SPRING
17					HOUSING ASSEMBLY
	J812 7845	1			1981-85
	J813 4499	1			1986
	J813 4499	1			1982-86: EXPORT, Right Hand Drive
18					BEARING
	J812 7850	1			1986
19					BUSHING
	J813 3537	1			1986
20					RETAINER
	J813 4703	1			1986
21					SWITCH, Windshield Wiper
	5600 0031	1			1986
	J813 3536	1			1986: EXPORT, Right Hand Drive
22					SECTOR
	J812 0097	1			
	J813 3538	1			EXPORT: Right Hand Drive ***
23					BOLT
	J448 7897	1			1981-84

MODEL CODES

16=Cherokee 2 Dr.(1981-83)
17=Cherokee 2 Dr.(1981-83)
73=Cherokee 2WD-2 Dr.(1984-86)
74=Cherokee 2WD-4 Dr.(1984-86)
18=Cherokee 4 Dr.(1981-83)
77=Cherokee 4WD-2 Dr.(1984-86)
78=Cherokee 4WD-4 Dr.(1984-86)
85=CJ-5 (1981-83)
86=CJ-6(1981)
87=CJ-7(1981-86)
88=CJ-8, Scrambler(1981-86)
64=Comanche 2WD-6 Ft. Box(1986)
66=Comanche 2WD-7 Ft. Box(1986)
63=Comanche 4WD-6 Ft. Box(1986)
65=Comanche 4WD-7 Ft. Box(1986)
15=Grand Wagoneer 4 Dr.(1984-86)
25=J-10 Truck 7 Ft. Box(1981-84)
26=J10 Truck 8 Ft. Box(1981-86)
27=J-20 Truck 8 Ft. Box(1981-86)
15=Wagoneer 4 Dr.(1981-83)
75=Wagoneer 4WD-4 Dr.(1984-86)

BODY
CJ=CJ-5, CJ-6, CJ-7, CJ-8, Scrambler(1981-86)
MJ=Comanche Pickup(1986)

STYLES
SJ=Wagoneer(1981-83), Grand Wagoneer(1984-86), Cherokee(1981-83), J-10, J-20(1981-86)
XJ=Wagoneer(1984-86), Cherokee(1984-86)

AR = Use as Required - = Non Illustrated Part P.A.R. = Paint as Required

HOUSING, STEERING COLUMN UPPER WITH FLOOR GEAR SHIFT, WITHOUT TILT WHEEL SJ CHEROKEE, SJ WAGONEER, J10, J20
Figure 19-2900

81J19 2900

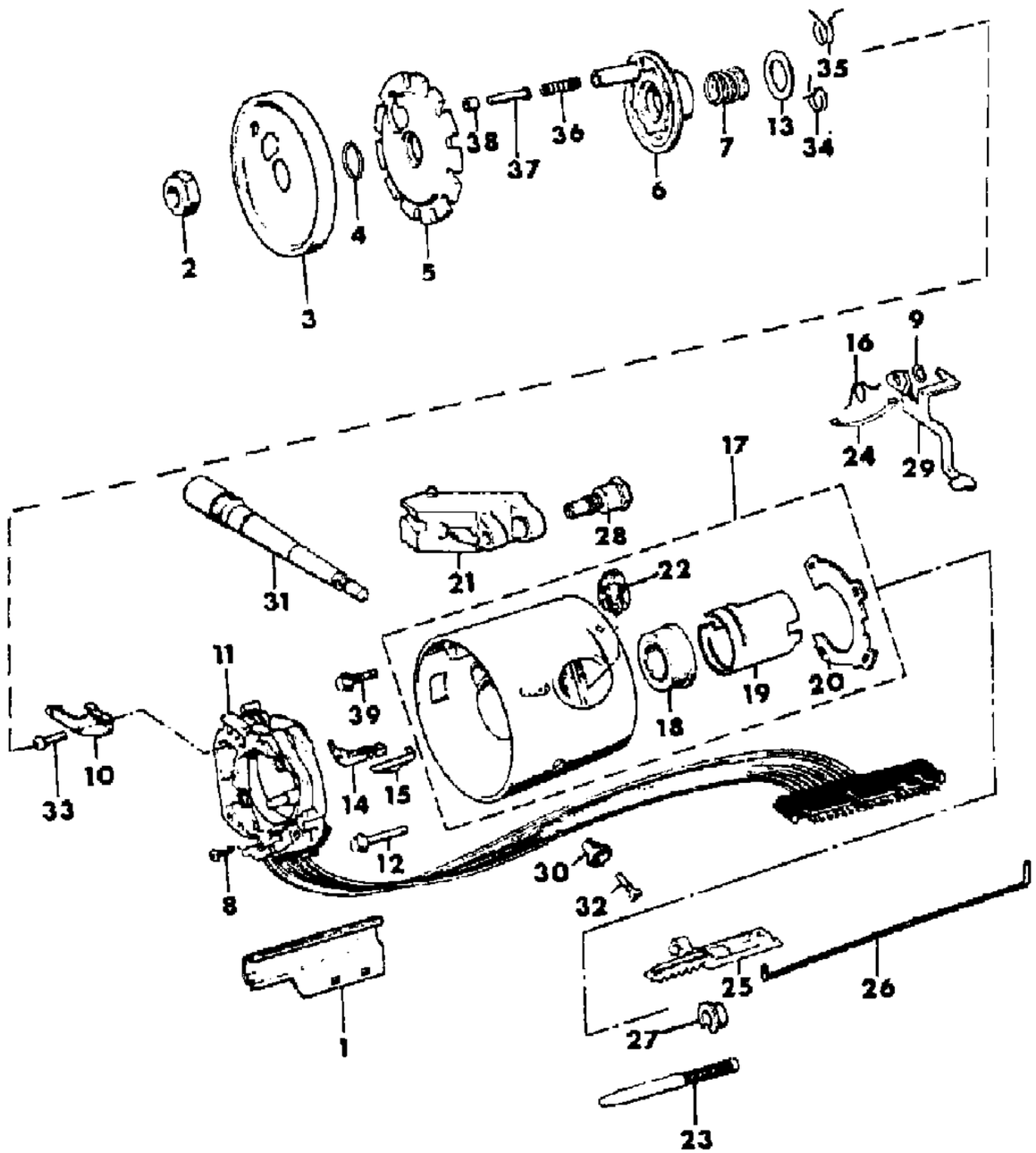

ITEM	PART NUMBER	QTY	BODY	MODEL	DESCRIPTION
	J813 0676	1			1985
	J448 7897	1			1986
	J813 0676	1			1982-86: EXPORT, Right Hand Drive
24	J448 7774	1			SPRING
25	J812 1437	1			RACK
26					ROD
	J448 7782	1			1981-85
	8350 0238	1			1986
	J448 7782	1			1982-86: EXPORT, Right Hand Drive
27	J448 7777	1			BUSHING
28					PIN
	J813 3538	1			1986
29					LEVER, Release
	J812 0182	1			1981-85
	J813 3541	1			1986
	J813 3541	1			1982-86: EXPORT, Right Hand Drive
30	J323 8343	1			KNOB, Hazard Lights
31					LEVER, Directional Signal
					With Cruise Control
	J323 7116	1			1981: With Six Cylinder
	J322 6524	1			1981: With Eight Cylinder
	J323 7116	1			1982-86
					Without Cruise Control
	J536 2173	1			1981-85
	5600 0432	1			1986
	J805 0713	1			1982-86: EXPORT, Right Hand Drive
32	3420 2670	1			SCREW
33	J400 1267	1			SCREW
34	J812 9317	1			SPRING, Lower
35	J812 9335	1			SPRING, Upper
36	J318 7255	1			SPRING
37	J318 7249	1			PIN
38	J318 7257	1			RETAINER
39	8350 2102	1			SCREW

MODEL CODES

16=Cherokee 2 Dr.(1981-83)
17=Cherokee 2 Dr.(1981-83)
73=Cherokee 2WD-2 Dr.(1984-86)
74=Cherokee 2WD-4 Dr.(1984-86)
18=Cherokee 4 Dr.(1981-83)
77=Cherokee 4WD-2 Dr.(1984-86)
78=Cherokee 4WD-4 Dr.(1984-86)
85=CJ-5 (1981-83)
86=CJ-6(1981)
87=CJ-7(1981-86)
88=CJ-8, Scrambler(1981-86)
64=Comanche 2WD-6 Ft. Box(1986)
66=Comanche 2WD-7 Ft. Box(1986)
63=Comanche 4WD-6 Ft. Box(1986)
65=Comanche 4WD-7 Ft. Box(1986)
15=Grand Wagoneer 4 Dr.(1984-86)
25=J-10 Truck 7 Ft. Box(1981-84)
26=J10 Truck 8 Ft. Box(1981-86)
27=J-20 Truck 8 Ft. Box(1981-86)
15=Wagoneer 4 Dr.(1981-83)
75=Wagoneer 4WD-4 Dr.(1984-86)

BODY
CJ=CJ-5, CJ-6, CJ-7, CJ-8, Scrambler(1981-86)
MJ=Comanche Pickup(1986)

STYLES
SJ=Wagoneer(1981-83), Grand Wagoneer(1984-86), Cherokee(1981-83), J-10, J-20(1981-86)
XJ=Wagoneer(1984-86), Cherokee(1984-86)

AR = Use as Required - = Non Illustrated Part P.A.R. = Paint as Required

« RETURN TO GROUP INDEX

HOUSING, STEERING COLUMN LOWER WITH FLOOR GEAR SHIFT, WITHOUT TILT WHEEL SJ CHEROKEE, SJ WAGONEER, J10, J20
Figure 19-3000

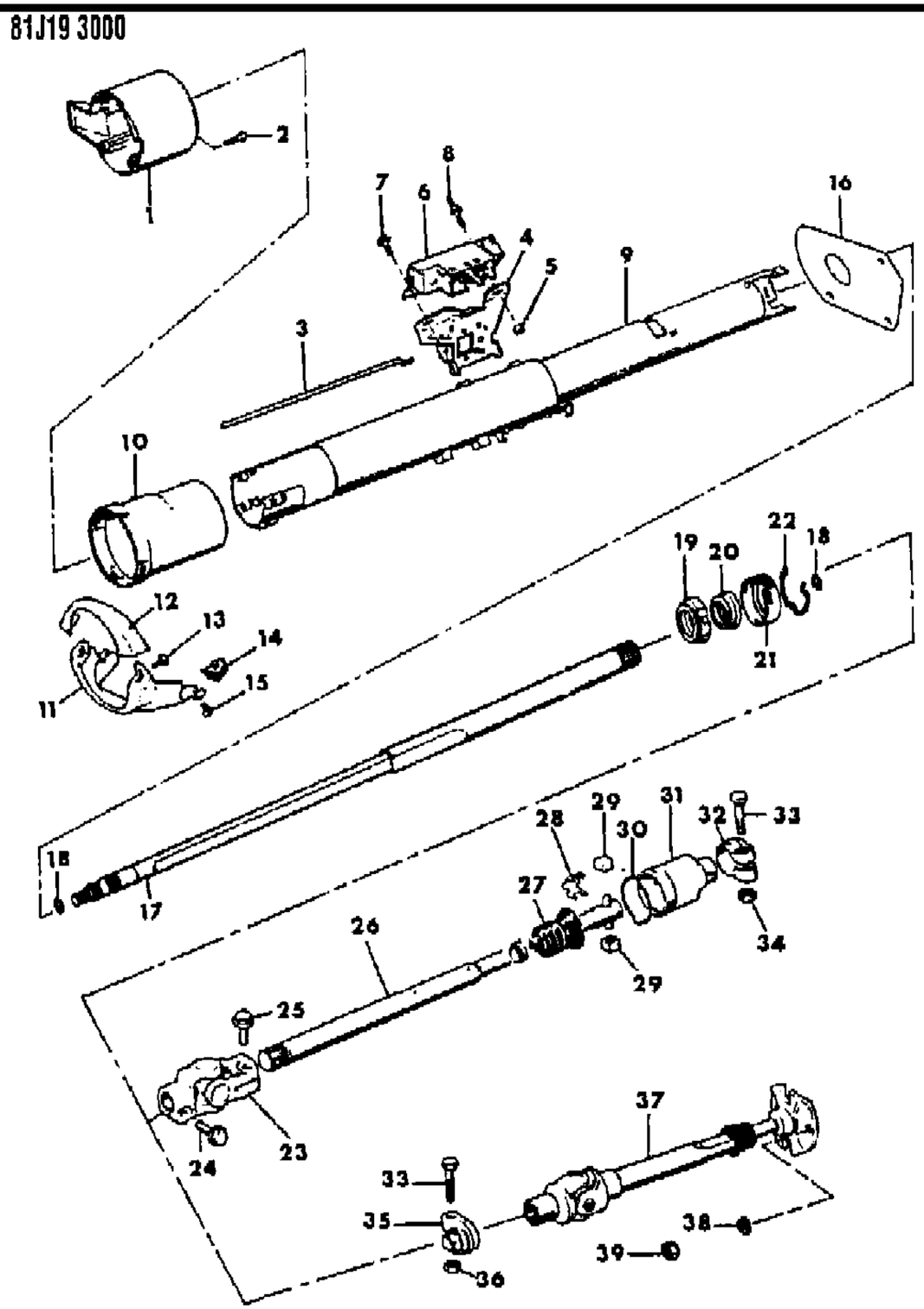

ITEM	PART NUMBER	QTY	BODY	MODEL	DESCRIPTION
1					BOWL
	J812 0181	1			1981-85
	J813 4497	1			1986
	J813 4497	1			1982-86: EXPORT, Right Hand Drive
2	J448 8301	3			SCREW
3					ROD, Dimmer Actuator
	8350 2786	1			1986
	J813 3545	1			1982-86: EXPORT, Right Hand Drive
4					SWITCH, Dimmer
	5600 2125	1			1986
	J813 4498	1			1982-86: EXPORT, Right Hand Drive
5	J012 0361	1			NUT
6					SWITCH, Ignition
	J812 8889	1			1982-85
	J325 0576	1			1986
	J325 0576	1			1982-86: EXPORT, Right Hand Drive
7	J448 7772	2			SCREW
8	J813 3546	1			STUD
9					JACKET ASSEMBLY
	J813 0176	1			1981-85
	8350 2605	1			1986
	J813 3543	1			1982-86: EXPORT, Right Hand Drive
10					SHROUD
	J812 0184	1			1981-85
	8350 2604	1			1986
	J813 3542	1			1982-86: EXPORT, Right Hand Drive
11	J098 9691	1			BEZEL, Lower
12	J098 9688	1			BEZEL, Upper
13	J812 0055	2			SCREW
14	J044 5446	2			NUT
15	J400 2526	2			SCREW
16					SEAL, Dash
	J319 6896	1			1981-84
	J319 6896	1			1985
	J546 1498	1			1985: EXPORT
	J319 6896	1			1986
17					SHAFT, Steering Column
	J812 8892	1			1981-85
	8350 2606	1			1986

MODEL CODES

16=Cherokee 2 Dr.(1981-83)
17=Cherokee 2 Dr.(1981-83)
73=Cherokee 2WD-2 Dr.(1984-86)
74=Cherokee 2WD-4 Dr.(1984-86)
18=Cherokee 4 Dr.(1981-83)
77=Cherokee 4WD-2 Dr.(1984-86)
78=Cherokee 4WD-4 Dr.(1984-86)
85=CJ-5 (1981-83)
86=CJ-6(1981)
87=CJ-7(1981-86)
88=CJ-8, Scrambler(1981-86)
64=Comanche 2WD-6 Ft. Box(1986)
66=Comanche 2WD-7 Ft. Box(1986)
63=Comanche 4WD-6 Ft. Box(1986)
65=Comanche 4WD-7 Ft. Box(1986)
15=Grand Wagoneer 4 Dr.(1984-86)
25=J-10 Truck 7 Ft. Box(1981-84)
26=J10 Truck 8 Ft. Box(1981-86)
27=J-20 Truck 8 Ft. Box(1981-86)
15=Wagoneer 4 Dr.(1981-83)
75=Wagoneer 4WD-4 Dr.(1984-86)

BODY
CJ=CJ-5, CJ-6, CJ-7, CJ-8, Scrambler(1981-86)
MJ=Comanche Pickup(1986)

STYLES
SJ=Wagoneer(1981-83), Grand Wagoneer(1984-86), Cherokee(1981-83), J-10, J-20(1981-86)
XJ=Wagoneer(1984-86), Cherokee(1984-86)

AR = Use as Required - = Non Illustrated Part P.A.R. = Paint as Required

HOUSING, STEERING COLUMN LOWER WITH FLOOR GEAR SHIFT, WITHOUT TILT WHEEL SJ CHEROKEE, SJ WAGONEER, J10, J20
Figure 19-3000

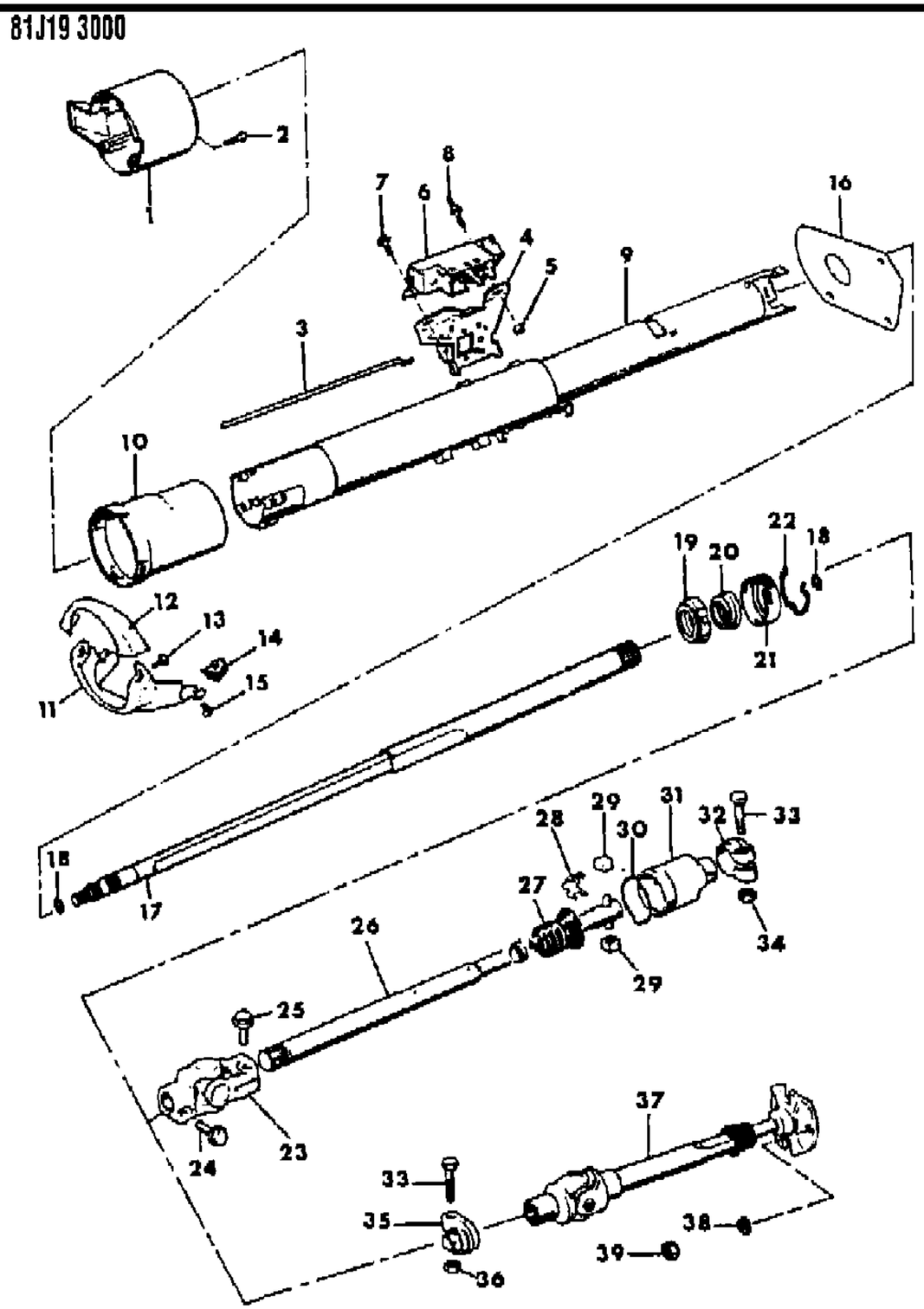

ITEM	PART NUMBER	QTY	BODY	MODEL	DESCRIPTION
	J812 8892	1			1982-86: EXPORT, Right Hand Drive
18	J320 8377	1			RING, Snap
19	J448 7696	1			ADAPTER
20	J448 6713	1			BEARING
21	J448 7743	1			RETAINER
22	J448 7739	1			CLIP
23	J535 5028	1			U-JOINT ASSEMBLY ***
24	S018 1670	1			BOLT
25	J099 4602	1			BOLT
26	J535 5027	1			SHAFT
27	J813 2676	1			BOOT
28	J320 4878	1			SPRING
29	J320 4875	2			BEARING
30	J448 6679	1			RING, Retaining
31	J812 1299	1			COUPLING
32	J099 4520	1			CLAMP
33	J319 4110	2			BOLT
34	J400 5653	1			NUT
35					CLAMP
	J319 1827	1			1981-85
	J320 9606	1			1986
	J319 1827	1			1982-86: EXPORT, Right Hand Drive
36	J448 8431	1			NUT
37	J535 5766	1			SHAFT ASSEMBLY, Steering Column Lower
38					WASHER
	J012 0214	2			5/16"
	J012 0382	2			3/8"
39					NUT
	J012 0368	2			5/16"
	J012 0369	2			3/8"

MODEL CODES

16=Cherokee 2 Dr.(1981-83)
17=Cherokee 2 Dr.(1981-83)
73=Cherokee 2WD-2 Dr.(1984-86)
74=Cherokee 2WD-4 Dr.(1984-86)
18=Cherokee 4 Dr.(1981-83)
77=Cherokee 4WD-2 Dr.(1984-86)
78=Cherokee 4WD-4 Dr.(1984-86)
85=CJ-5 (1981-83)
86=CJ-6(1981)
87=CJ-7(1981-86)
88=CJ-8, Scrambler(1981-86)
64=Comanche 2WD-6 Ft. Box(1986)
66=Comanche 2WD-7 Ft. Box(1986)
63=Comanche 4WD-6 Ft. Box(1986)
65=Comanche 4WD-7 Ft. Box(1986)
15=Grand Wagoneer 4 Dr.(1984-86)
25=J-10 Truck 7 Ft. Box(1981-84)
26=J10 Truck 8 Ft. Box(1981-86)
27=J-20 Truck 8 Ft. Box(1981-86)
15=Wagoneer 4 Dr.(1981-83)
75=Wagoneer 4WD-4 Dr.(1984-86)

BODY
CJ=CJ-5, CJ-6, CJ-7, CJ-8, Scrambler(1981-86)
MJ=Comanche Pickup(1986)

STYLES
SJ=Wagoneer(1981-83), Grand Wagoneer(1984-86), Cherokee(1981-83), J-10, J-20(1981-86)
XJ=Wagoneer(1984-86), Cherokee(1984-86)

AR = Use as Required - = Non Illustrated Part P.A.R. = Paint as Required

« RETURN TO GROUP INDEX

HOUSING, STEERING COLUMN UPPER WITH FLOOR GEAR SHIFT, WITH TILT WHEEL 1981-85 SJ CHEROKEE, SJ WAGONEER, J10, J20
Figure 19-3100

81J19 3100

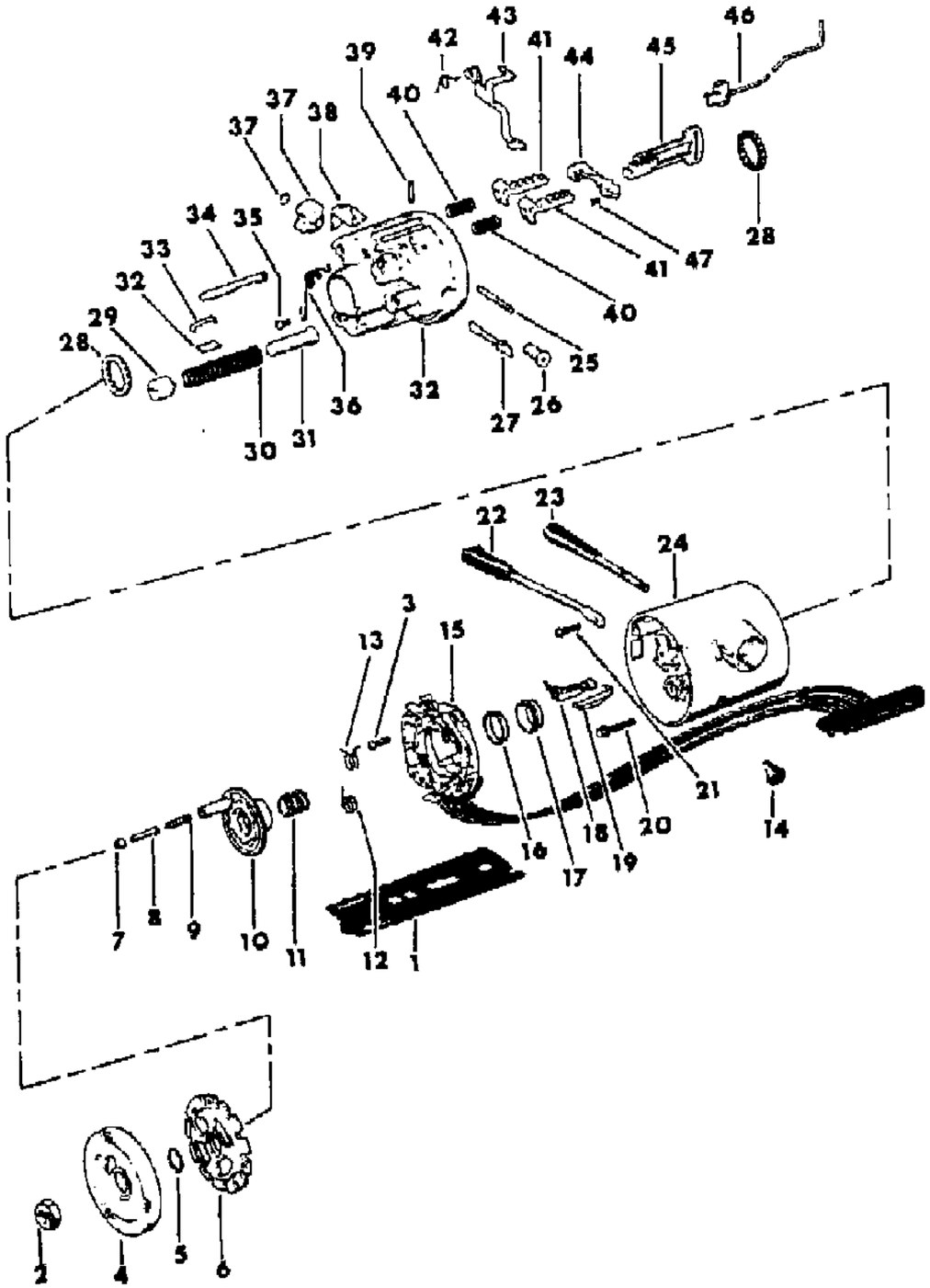

ITEM	PART NUMBER	QTY	BODY	MODEL	DESCRIPTION
1	J812 2486	1			PROTECTOR
2	J420 0414	1			NUT
3	J448 8301	3			SCREW
4	J322 8743	1			COVER
5	J320 8377	1			RING, Snap
6					PLATE, Lock
	J812 7874	1			
	J325 1125	1			EXPORT
7	J318 7257	1			RETAINER
8	J318 7249	1			PIN
9	J318 7255	1			SPRING
10	J448 7816	1			CAM, Cancelling
11	J812 2485	1			SPRING
12	J812 9317	1			SPRING, Lower
13	J812 9335	1			SPRING, Upper
14	J323 8343	1			KNOB, Hazard Lights
15	J322 9970	1			SWITCH, Directional
16	J448 7862	1			RACE
17	J812 2484	1			SEAT
18	J321 1424	1			SWITCH, Buzzer
19	J448 7853	1			CLIP
20	J448 7867	4			SCREW
21	J448 8318	1			SCREW
22					LEVER, Directional Signal
					With Cruise Control
	J323 7116	1			1981: Six Cylinder
	J322 6524	1			1981: Eight Cylinder
	J323 7116	1			1982-85
					Without Cruise Control
	J536 2173	1			1981-85
23	J318 6523	1			LEVER, Release
24					HOUSING ASSEMBLY
	J813 2480	1			1981-84
	8350 2127	1			1985
25	J448 7822	1			PIN
26	J448 8418	1			PIN
27	J813 4191	1			SHAFT
28	J320 8362	2			BEARING
29	J320 8143	1			RETAINER

MODEL CODES
16=Cherokee 2 Dr.(1981-83)
17=Cherokee 2 Dr.(1981-83)
73=Cherokee 2WD-2 Dr.(1984-86)
74=Cherokee 2WD-4 Dr.(1984-86)
18=Cherokee 4 Dr.(1981-83)
77=Cherokee 4WD-2 Dr.(1984-86)
78=Cherokee 4WD-4 Dr.(1984-86)
85=CJ-5 (1981-83)
86=CJ-6(1981)
87=CJ-7(1981-86)
88=CJ-8, Scrambler(1981-86)
64=Comanche 2WD-6 Ft. Box(1986)
66=Comanche 2WD-7 Ft. Box(1986)
63=Comanche 4WD-6 Ft. Box(1986)
65=Comanche 4WD-7 Ft. Box(1986)
15=Grand Wagoneer 4 Dr.(1984-86)
25=J-10 Truck 7 Ft. Box(1981-84)
26=J10 Truck 8 Ft. Box(1981-86)
27=J-20 Truck 8 Ft. Box(1981-86)
15=Wagoneer 4 Dr.(1981-83)
75=Wagoneer 4WD-4 Dr.(1984-86)

BODY
CJ=CJ-5, CJ-6, CJ-7, CJ-8, Scrambler(1981-86)
MJ=Comanche Pickup(1986)

STYLES
SJ=Wagoneer(1981-83), Grand Wagoneer(1984-86), Cherokee(1981-83), J-10, J-20(1981-86)
XJ=Wagoneer(1984-86), Cherokee(1984-86)

AR = Use as Required - = Non Illustrated Part P.A.R. = Paint as Required

HOUSING, STEERING COLUMN UPPER WITH FLOOR GEAR SHIFT, WITH TILT WHEEL 1981-85 SJ CHEROKEE, SJ WAGONEER, J10, J20
Figure 19-3100

81J19 3100

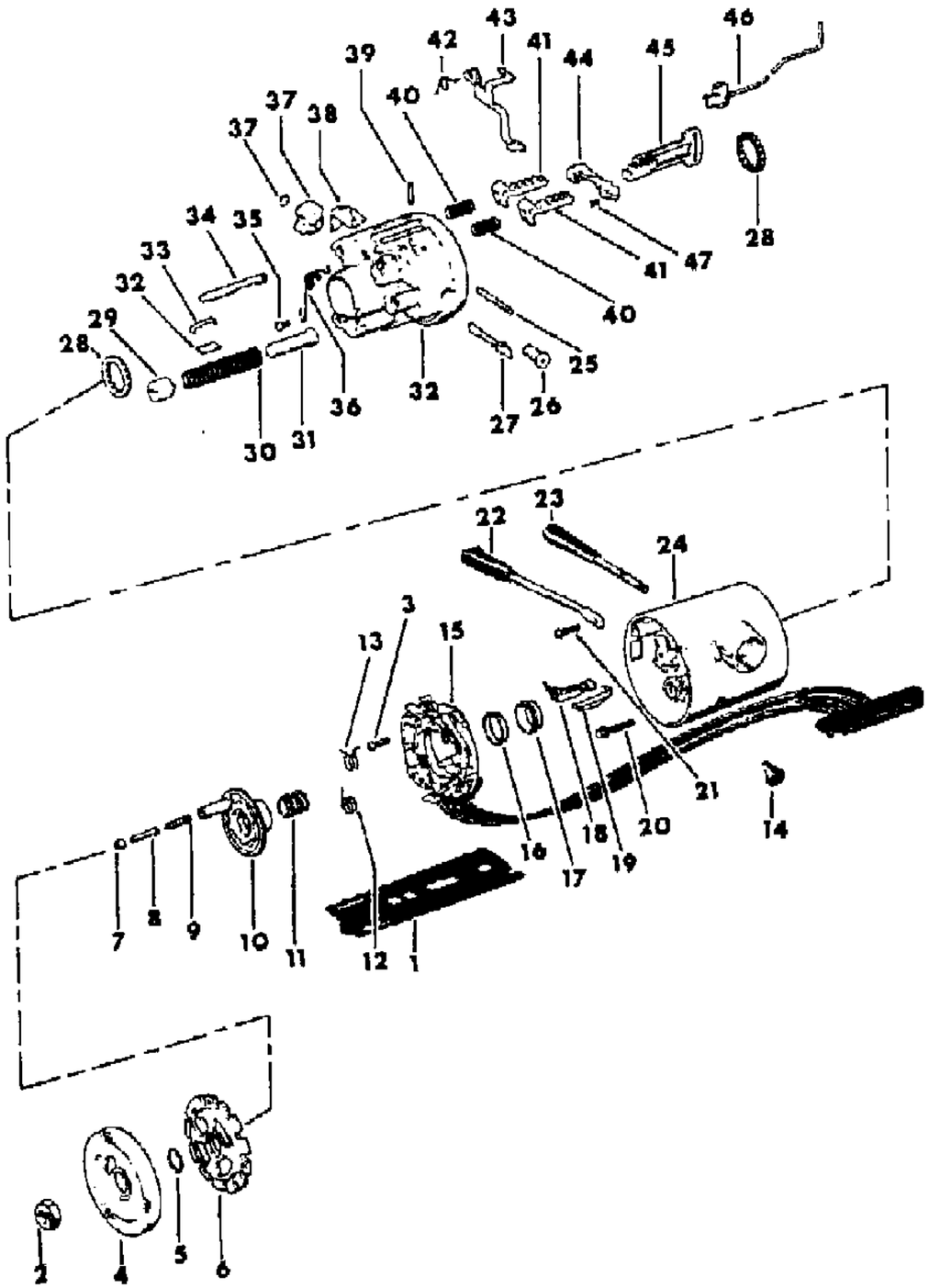

ITEM	PART NUMBER	QTY	BODY	MODEL	DESCRIPTION
30	J812 0252	1			SPRING
31	J448 7854	1			GUIDE
32					HOUSING ASSEMBLY
					1981-83
	J812 8159	1			
	J813 0675	1			EXPORT
					1984-85
	8350 1106	1			
	8350 1105	1			EXPORT
33	J448 7831	1			CLIP
34					BOLT
	J448 7819	1			
	J325 1124	1			EXPORT
35	J448 7827	1			SCREW
36	J448 7830	1			SPRING
37	J812 7859	1			SECTOR
38	J448 7869	1			SHIELD
39	J320 8043	1			PIN
40	J448 7832	2			SPRING
41					SHOE
	J448 7828	1			Right
	J812 2716	1			Left
42	J812 8156	1			SPRING
43	J812 8154	1			LEVER, Release
44	J448 7821	1			LEVER, Shoe
45	J812 7870	1			RACK
46	J812 9485	1			ACTUATOR
47	J320 8047	1			SPRING

MODEL CODES

16=Cherokee 2 Dr.(1981-83)
17=Cherokee 2 Dr.(1981-83)
73=Cherokee 2WD-2 Dr.(1984-86)
74=Cherokee 2WD-4 Dr.(1984-86)
18=Cherokee 4 Dr.(1981-83)
77=Cherokee 4WD-2 Dr.(1984-86)
78=Cherokee 4WD-4 Dr.(1984-86)
85=CJ-5 (1981-83)
86=CJ-6(1981)
87=CJ-7(1981-86)
88=CJ-8, Scrambler(1981-86)
64=Comanche 2WD-6 Ft. Box(1986)
66=Comanche 2WD-7 Ft. Box(1986)
63=Comanche 4WD-6 Ft. Box(1986)
65=Comanche 4WD-7 Ft. Box(1986)
15=Grand Wagoneer 4 Dr.(1984-86)
25=J-10 Truck 7 Ft. Box(1981-84)
26=J10 Truck 8 Ft. Box(1981-86)
27=J-20 Truck 8 Ft. Box(1981-86)
15=Wagoneer 4 Dr.(1981-83)
75=Wagoneer 4WD-4 Dr.(1984-86)

BODY

CJ=CJ-5, CJ-6, CJ-7, CJ-8, Scrambler(1981-86)
MJ=Comanche Pickup(1986)

STYLES

SJ=Wagoneer(1981-83), Grand Wagoneer(1984-86), Cherokee(1981-83), J-10, J-20(1981-86)
XJ=Wagoneer(1984-86), Cherokee(1984-86)

AR = Use as Required - = Non Illustrated Part P.A.R. = Paint as Required

« RETURN TO GROUP INDEX

HOUSING, STEERING COLUMN LOWER WITH FLOOR SHIFT, WITH TILT WHEEL 1981-85 SJ CHEROKEE, SJ WAGONEER, J10, J20
Figure 19-3200

81J19 3200 A

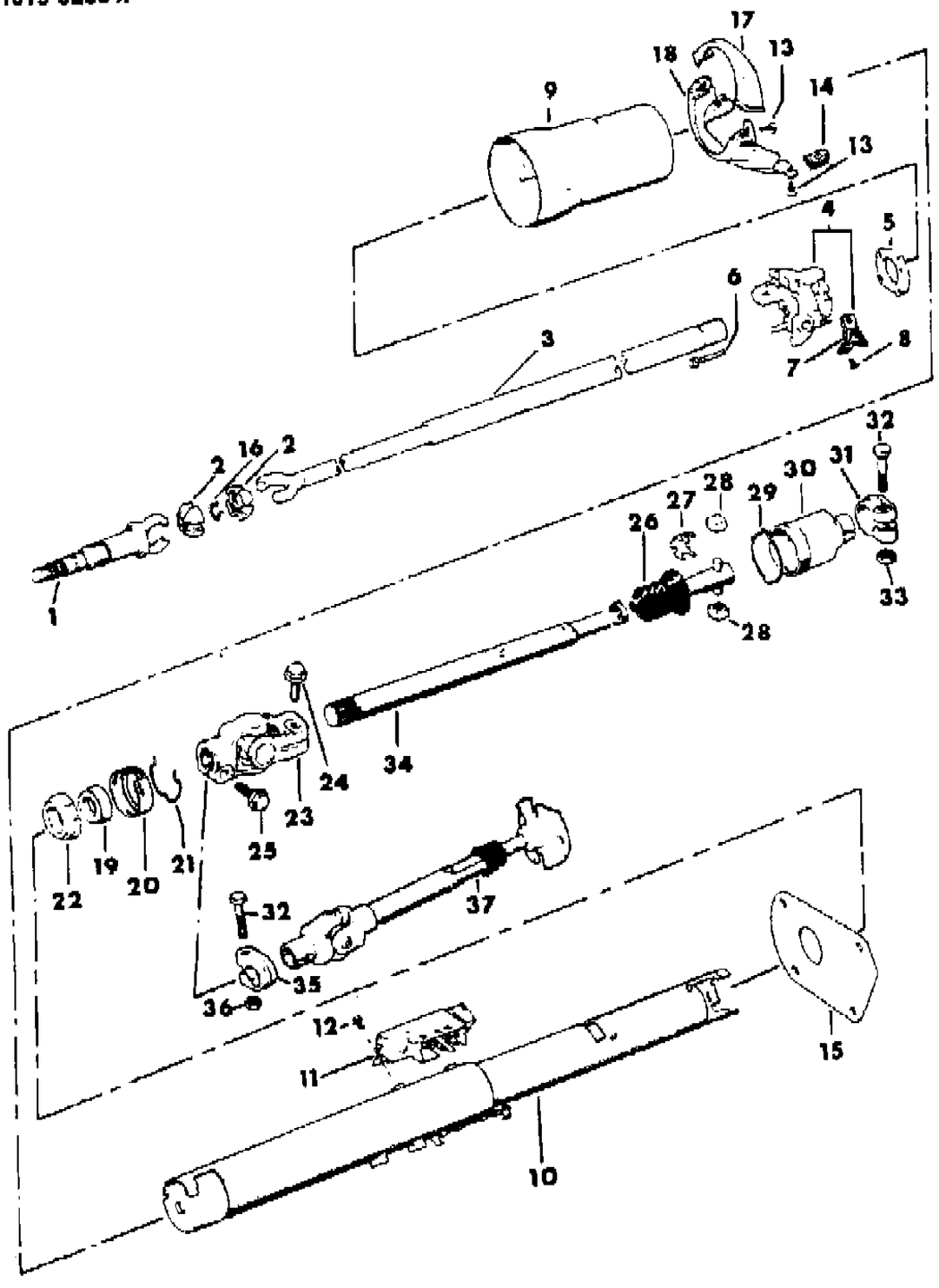

ITEM	PART NUMBER	QTY	BODY	MODEL	DESCRIPTION
1	J812 8888	1			SHAFT
2	J448 7842	2			SPHERE
3	J448 7840	1			SHAFT ASSEMBLY
4					SUPPORT ASSEMBLY
	J813 4192	1			1981-83
	8350 1110	1			1984-85
5	J448 7860	1			PLATE
6	J448 7867	4			BOLT
7	J813 3569	1			PLATE
8	J320 8210	2			SCREW
9	J812 9488	1			SHROUD
10	J813 0183	1			JACKET ASSEMBLY
11	J325 0575	1			SWITCH, Ignition
12	J448 7772	2			SCREW
13	J812 0055	4			SCREW
14	J044 5446	2			NUT
15	J319 6896	1			SEAL
16	J448 7843	1			CLIP
17	J098 9688	1			BEZEL, Upper
18	J098 9691	1			BEZEL, Lower
19	J448 6713	1			BEARING
20	J448 7743	1			RETAINER
21	J448 7739	1			CLIP
22	J448 7696	1			ADAPTER
23	J535 5028	1			U-JOINT ASSEMBLY ***
24	J099 4602	1			BOLT
25	S018 1670	1			BOLT
26	J813 2676	1			BOOT
27	J320 4878	1			SPRING
28	J320 4875	1			BEARING
29	J448 6679	1			RING, Retaining
30	J812 1299	1			COUPLING
31	J099 4520	1			CLAMP
32	J319 4110	1			BOLT
33	J400 5653	1			NUT
34	J535 5027	1			SHAFT
35	J319 1827	1			CLAMP
36	J448 8431	1			NUT
37	J535 5766	1			SHAFT ASSEMBLY

MODEL CODES
16=Cherokee 2 Dr.(1981-83)
17=Cherokee 2 Dr.(1981-83)
73=Cherokee 2WD-2 Dr.(1984-86)
74=Cherokee 2WD-4 Dr.(1984-86)
18=Cherokee 4 Dr.(1981-83)
77=Cherokee 4WD-2 Dr.(1984-86)
78=Cherokee 4WD-4 Dr.(1984-86)
85=CJ-5 (1981-83)
86=CJ-6(1981)
87=CJ-7(1981-86)
88=CJ-8, Scrambler(1981-86)
64=Comanche 2WD-6 Ft. Box(1986)
66=Comanche 2WD-7 Ft. Box(1986)
63=Comanche 4WD-6 Ft. Box(1986)
65=Comanche 4WD-7 Ft. Box(1986)
15=Grand Wagoneer 4 Dr.(1984-86)
25=J-10 Truck 7 Ft. Box(1981-84)
26=J10 Truck 8 Ft. Box(1981-86)
27=J-20 Truck 8 Ft. Box(1981-86)
15=Wagoneer 4 Dr.(1981-83)
75=Wagoneer 4WD-4 Dr.(1984-86)

BODY
CJ=CJ-5, CJ-6, CJ-7, CJ-8, Scrambler(1981-86)
MJ=Comanche Pickup(1986)

STYLES
SJ=Wagoneer(1981-83), Grand Wagoneer(1984-86), Cherokee(1981-83), J-10, J-20(1981-86)
XJ=Wagoneer(1984-86), Cherokee(1984-86)

AR = Use as Required - = Non Illustrated Part P.A.R. = Paint as Required

« RETURN TO GROUP INDEX

HOUSING, STEERING COLUMN UPPER WITH FLOOR SHIFT, WITH TILT WHEEL 1986 SJ WAGONEER, J10, J20
Figure 19-3300

81J19 3300

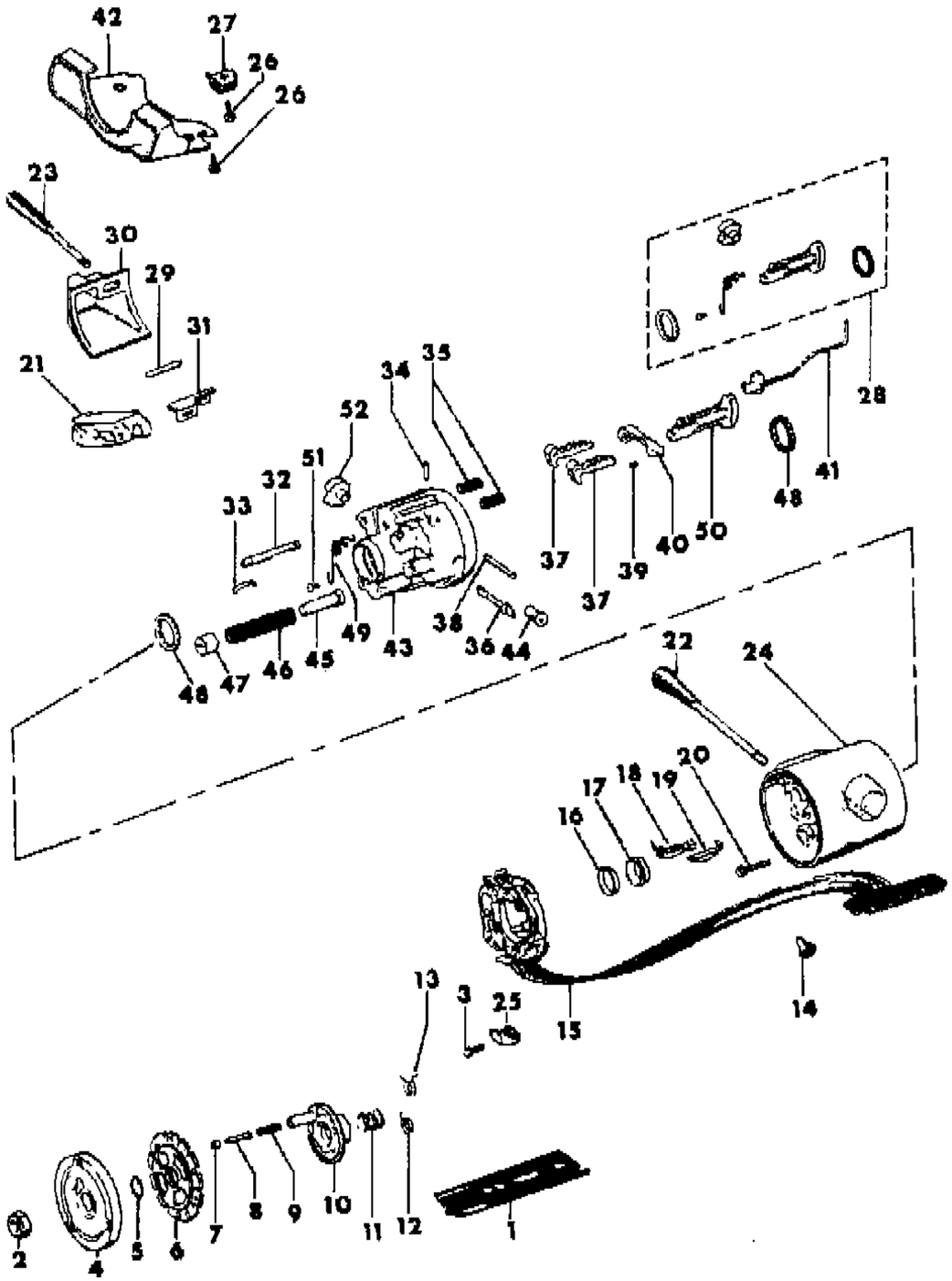

ITEM	PART NUMBER	QTY	BODY	MODEL	DESCRIPTION
1	8350 2566	1			PROTECTOR
2	J420 0414	1			NUT
3	J448 8301	3			SCREW
4	J322 8743	1			COVER
5	J320 8377	1			RING
6					PLATE, Lock
	J812 7874	1			
	J325 1125	1			EXPORT, Right Hand Drive
7	J318 7257	1			RETAINER
8	J318 7249	1			PIN
9	J318 7255	1			SPRING
10	J448 7816	1			CAM, Cancelling
11	J812 2485	1			SPRING
12	J812 9317	1			SPRING, Lower
13	J812 9335	1			SPRING, Upper
14	J323 8343	1			KNOB
15					SWITCH, Directional
	5600 2011	1			
	J322 9970	1			EXPORT, Right Hand Drive
16	J448 7862	1			RACE
17	J812 2484	1			SEAT
18	J321 1424	1			SWITCH, Buzzer
19	J448 7853	1			CLIP
20	J813 3572	1			SCREW
21					SWITCH, Wiper
	5600 0033	1			With Intermittent Wipers
	5600 0431	1			Without Intermittent Wipers
22					LEVER, Directional Signal
					With Intermittent Wipers
	5600 0034	1			With Cruise Control
	5600 0433	1			Without Cruise Control
					Without Intermittent Wipers
	5600 0432	1			
	J805 0713	1			EXPORT, Right Hand Drive
23	J323 9880	1			LEVER, Release
24					COVER
	8350 2096	1			
	8350 2109	1			EXPORT, Right Hand Drive
25					ARM, Lever

MODEL CODES

16=Cherokee 2 Dr.(1981-83)	78=Cherokee 4WD-4 Dr.(1984-86)	64=Comanche 2WD-6 Ft. Box(1986)	25=J-10 Truck 7 Ft. Box(1981-84)
17=Cherokee 2 Dr.(1981-83)	85=CJ-5 (1981-83)	66=Comanche 2WD-7 Ft. Box(1986)	26=J10 Truck 8 Ft. Box(1981-86)
73=Cherokee 2WD-2 Dr.(1984-86)	86=CJ-6(1981)	63=Comanche 4WD-6 Ft. Box(1986)	27=J-20 Truck 8 Ft. Box(1981-86)
74=Cherokee 2WD-4 Dr.(1984-86)	87=CJ-7(1981-86)	65=Comanche 4WD-7 Ft. Box(1986)	15=Wagoneer 4 Dr.(1981-83)
18=Cherokee 4 Dr.(1981-83)	88=CJ-8, Scrambler(1981-86)	15=Grand Wagoneer 4 Dr.(1984-86)	75=Wagoneer 4WD-4 Dr.(1984-86)
77=Cherokee 4WD-2 Dr.(1984-86)			

BODY
CJ=CJ-5, CJ-6, CJ-7, CJ-8, Scrambler(1981-86)
MJ=Comanche Pickup(1986)

STYLES
SJ=Wagoneer(1981-83), Grand Wagoneer(1984-86), Cherokee(1981-83), J-10, J-20(1981-86)
XJ=Wagoneer(1984-86), Cherokee(1984-86)

AR = Use as Required - = Non Illustrated Part P.A.R. = Paint as Required

« RETURN TO GROUP INDEX »

HOUSING, STEERING COLUMN UPPER WITH FLOOR SHIFT, WITH TILT WHEEL 1986 SJ WAGONEER, J10, J20
Figure 19-3300

81J19 3300

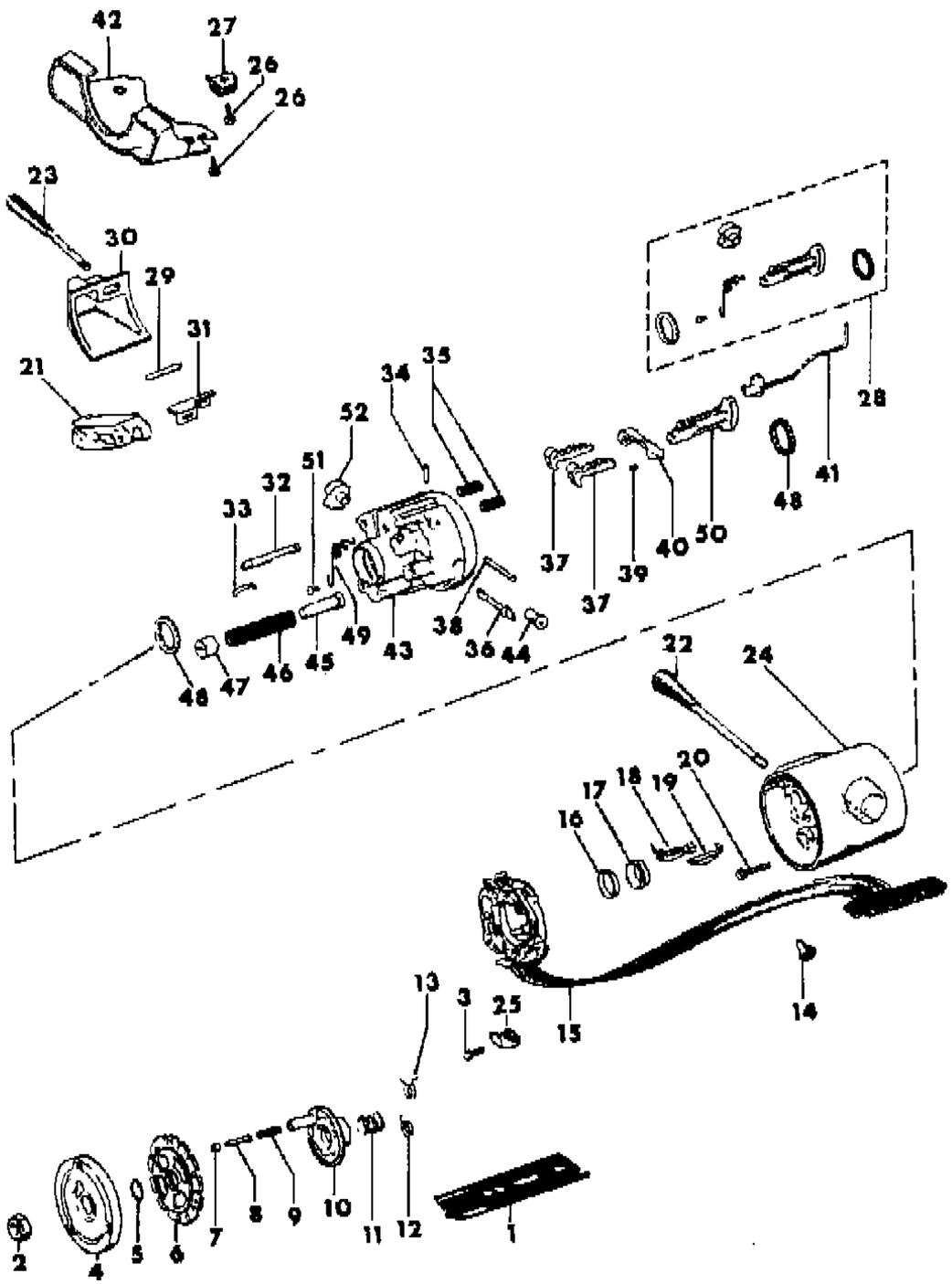

ITEM	PART NUMBER	QTY	BODY	MODEL	DESCRIPTION
	8350 1575	1			
	J813 3560	1			EXPORT, Right Hand Drive
26	3420 1440	4			SCREW
27	3420 1820	2			NUT
28	8351 0055	1			RACK PACKAGE
29	J813 3565	1			PIN
30	J813 4704	1			CAP
31	J813 3570	1			ACTUATOR
32					BOLT
	J448 7819	1			
	J325 1124	1			EXPORT, Right Hand Drive
33	J448 7831	1			SPRING
34	J320 8043	1			PIN
35	J448 7832	2			SPRING
36	J813 4191	1			SHAFT
37					SHOE
	J812 2716	1			Left
	J448 7828	1			Right
38	J448 7822	1			PIN
39	J320 8047	1			SPRING
40	J813 3567	1			LEVER
41					ACTUATOR
	8350 0239	1			
	J812 9485	1			EXPORT, Right Hand Drive
42	5500 9633	1			COVER, P.A.R.
43					HOUSING ASSEMBLY
	8350 1104	1			
	8350 1107	1			EXPORT, Right Hand Drive
44	J448 8418	2			PIN
45	J448 7854	1			GUIDE
46	J812 0252	1			SPRING
47	J320 8143	1			RETAINER
48	J320 8362	2			BEARING
49	J448 7830	1			SPRING
50	J812 7870	1			RACK
51	J448 7827	1			SCREW
52	J812 7859	1			SECTOR

MODEL CODES

16=Cherokee 2 Dr.(1981-83)
17=Cherokee 2 Dr.(1981-83)
73=Cherokee 2WD-2 Dr.(1984-86)
74=Cherokee 2WD-4 Dr.(1984-86)
18=Cherokee 4 Dr.(1981-83)
77=Cherokee 4WD-2 Dr.(1984-86)
78=Cherokee 4WD-4 Dr.(1984-86)
85=CJ-5 (1981-83)
86=CJ-6(1981)
87=CJ-7(1981-86)
88=CJ-8, Scrambler(1981-86)
64=Comanche 2WD-6 Ft. Box(1986)
66=Comanche 2WD-7 Ft. Box(1986)
63=Comanche 4WD-6 Ft. Box(1986)
65=Comanche 4WD-7 Ft. Box(1986)
15=Grand Wagoneer 4 Dr.(1984-86)
25=J-10 Truck 7 Ft. Box(1981-84)
26=J10 Truck 8 Ft. Box(1981-86)
27=J-20 Truck 8 Ft. Box(1981-86)
15=Wagoneer 4 Dr.(1981-83)
75=Wagoneer 4WD-4 Dr.(1984-86)

BODY
CJ=CJ-5, CJ-6, CJ-7, CJ-8, Scrambler(1981-86)
MJ=Comanche Pickup(1986)

STYLES
SJ=Wagoneer(1981-83), Grand Wagoneer(1984-86), Cherokee(1981-83), J-10, J-20(1981-86)
XJ=Wagoneer(1984-86), Cherokee(1984-86)

AR = Use as Required - = Non Illustrated Part P.A.R. = Paint as Required

« RETURN TO GROUP INDEX

HOUSING, STEERING COLUMN LOWER WITH FLOOR GEAR SHIFT, WITH TILT WHEEL 1986 SJ WAGONEER, J10, J20
Figure 19-3400

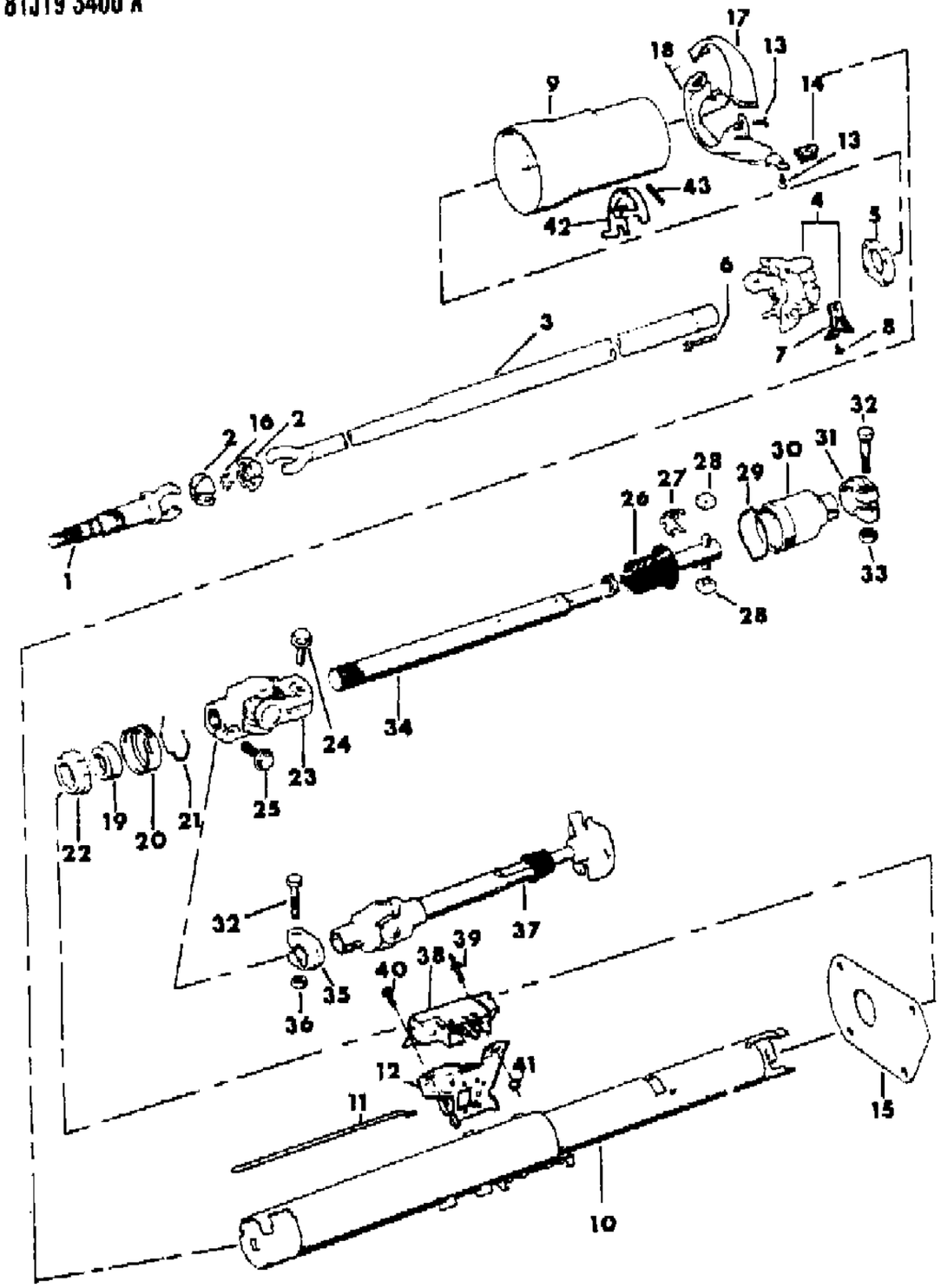

ITEM	PART NUMBER	QTY	BODY	MODEL	DESCRIPTION
1	J812 8888	1			SHAFT
2					SPHERE
	8351 0056	2			
	J448 7842	2			EXPORT, Right Hand Drive
3					SHAFT, Steering Column Lower
	8350 2602	1			
	J448 7840	1			EXPORT, Right Hand Drive
4	8350 1109	1			SUPPORT ASSEMBLY
5	J448 7860	1			PLATE
6	J448 7867	4			BOLT
7	J813 3569	1			PLATE
8	J320 8210	2			SCREW
9					SHROUD
	8350 2603	1			
	J812 9488	1			EXPORT, Right Hand Drive
10					JACKET ASSEMBLY
	8350 2600	1			
	J813 0183	1			EXPORT, Right Hand Drive
11					ROD, Dimmer Switch
	8350 2785	1			
	J813 3571	1			EXPORT, Right Hand Drive
12					SWITCH, Dimmer
	5600 2125	1			
	J813 4498	1			EXPORT, Right Hand Drive
13	J812 0055	4			SCREW
14	J044 5446	2			NUT
15	J319 6896	1			SEAL
16	J448 7843	1			CLIP
17	J098 9688	1			BEZEL, Upper
18	J098 9691	1			BEZEL, Lower
19	J448 6713	1			BEARING
20	J448 7743	1			RETAINER
21	J448 7739	1			CLIP
22	J448 7696	1			ADAPTER
23	J535 5028	1			U-JOINT ASSEMBLY ***
24	J099 4602	1			BOLT
25	S018 1670	1			BOLT
26	J813 2676	1			BOOT
27	J320 4878	1			SPRING

MODEL CODES

16=Cherokee 2 Dr.(1981-83)
17=Cherokee 2 Dr.(1981-83)
73=Cherokee 2WD-2 Dr.(1984-86)
74=Cherokee 2WD-4 Dr.(1984-86)
18=Cherokee 4 Dr.(1981-83)
77=Cherokee 4WD-2 Dr.(1984-86)
78=Cherokee 4WD-4 Dr.(1984-86)
85=CJ-5 (1981-83)
86=CJ-6(1981)
87=CJ-7(1981-86)
88=CJ-8, Scrambler(1981-86)
64=Comanche 2WD-6 Ft. Box(1986)
66=Comanche 2WD-7 Ft. Box(1986)
63=Comanche 4WD-6 Ft. Box(1986)
65=Comanche 4WD-7 Ft. Box(1986)
15=Grand Wagoneer 4 Dr.(1984-86)
25=J-10 Truck 7 Ft. Box(1981-84)
26=J10 Truck 8 Ft. Box(1981-86)
27=J-20 Truck 8 Ft. Box(1981-86)
15=Wagoneer 4 Dr.(1981-83)
75=Wagoneer 4WD-4 Dr.(1984-86)

BODY
CJ=CJ-5, CJ-6, CJ-7, CJ-8, Scrambler(1981-86)
MJ=Comanche Pickup(1986)

STYLES
SJ=Wagoneer(1981-83), Grand Wagoneer(1984-86), Cherokee(1981-83), J-10, J-20(1981-86)
XJ=Wagoneer(1984-86), Cherokee(1984-86)

AR = Use as Required - = Non Illustrated Part P.A.R. = Paint as Required

« RETURN TO GROUP INDEX »

HOUSING, STEERING COLUMN LOWER WITH FLOOR GEAR SHIFT, WITH TILT WHEEL 1986 SJ WAGONEER, J10, J20
Figure 19-3400

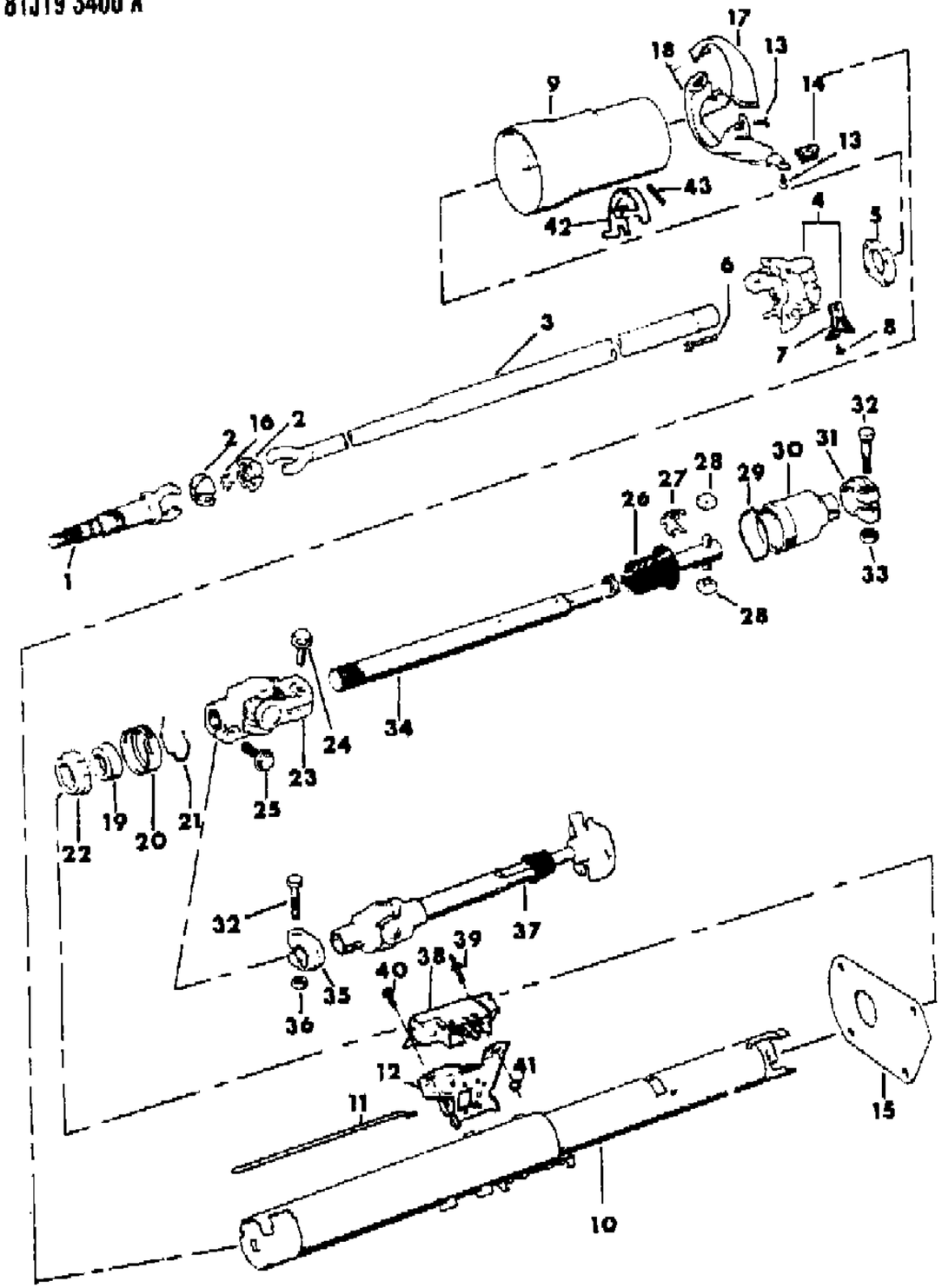

ITEM	PART NUMBER	QTY	BODY	MODEL	DESCRIPTION
28	J320 4875	2			BEARING
29	J448 6679	1			CLIP
30	J812 1299	1			COUPLING
31	J099 4520	1			CLAMP
32	J319 4110	2			BOLT
33	J400 5653	1			NUT
34	J535 5027	1			SHAFT
35	J320 9606	1			CLAMP
36	J448 8431	1			NUT
37	J535 5766	1			SHAFT
38	J325 0575	1			SWITCH, Ignition
39	J813 3546	1			STUD
40	J448 7772	1			SCREW
41	J012 0361	1			NUT
42	J812 8154	1			LEVER, Release
43	J812 8156	1			SPRING

MODEL CODES

16=Cherokee 2 Dr.(1981-83)
17=Cherokee 2 Dr.(1981-83)
73=Cherokee 2WD-2 Dr.(1984-86)
74=Cherokee 2WD-4 Dr.(1984-86)
18=Cherokee 4 Dr.(1981-83)
77=Cherokee 4WD-2 Dr.(1984-86)
78=Cherokee 4WD-4 Dr.(1984-86)
85=CJ-5 (1981-83)
86=CJ-6(1981)
87=CJ-7(1981-86)
88=CJ-8, Scrambler(1981-86)
64=Comanche 2WD-6 Ft. Box(1986)
66=Comanche 2WD-7 Ft. Box(1986)
63=Comanche 4WD-6 Ft. Box(1986)
65=Comanche 4WD-7 Ft. Box(1986)
15=Grand Wagoneer 4 Dr.(1984-86)
25=J-10 Truck 7 Ft. Box(1981-84)
26=J10 Truck 8 Ft. Box(1981-86)
27=J-20 Truck 8 Ft. Box(1981-86)
15=Wagoneer 4 Dr.(1981-83)
75=Wagoneer 4WD-4 Dr.(1984-86)

BODY
CJ=CJ-5, CJ-6, CJ-7, CJ-8, Scrambler(1981-86)
MJ=Comanche Pickup(1986)

STYLES
SJ=Wagoneer(1981-83), Grand Wagoneer(1984-86), Cherokee(1981-83), J-10, J-20(1981-86)
XJ=Wagoneer(1984-86), Cherokee(1984-86)

AR = Use as Required - = Non Illustrated Part P.A.R. = Paint as Required

« RETURN TO GROUP INDEX

HOUSING, STEERING COLUMN, UPPER WITH COLUMN SHIFT, WITHOUT TILT WHEEL SJ CHEROKEE, SJ WAGONEER, J10, J20
Figure 19-3500

81J19 3500

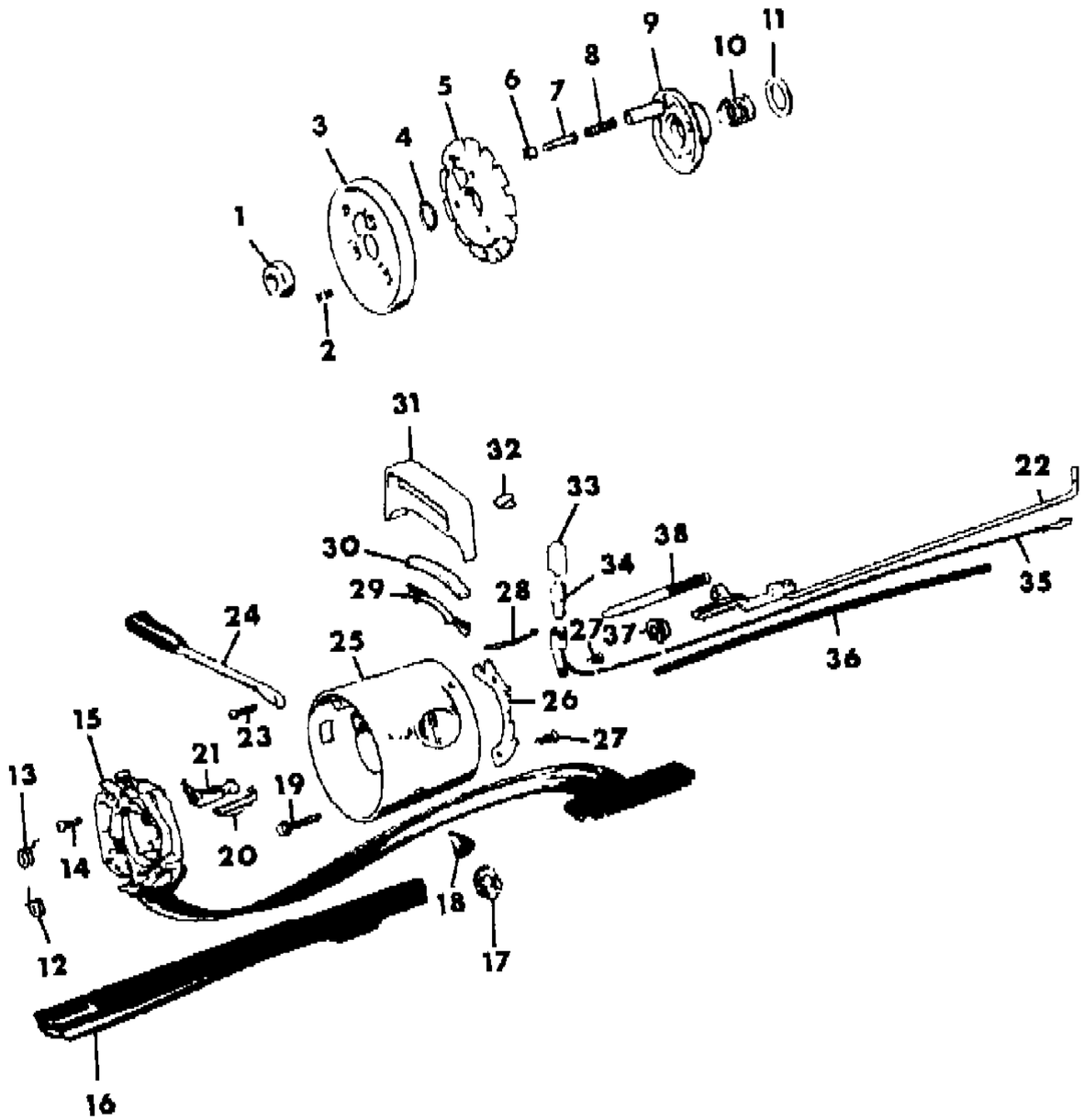

ITEM	PART NUMBER	QTY	BODY	MODEL	DESCRIPTION
1	J420 0300	1			NUT
2	J400 3949	2			SCREW
3	J322 8743	1			COVER
4	J320 8377	1			RING, Retaining
5	J812 7831	1			PLATE, Lock
6	J318 7257	1			RETAINER
7	J318 7249	1			PIN
8	J318 7255	1			SPRING
9	J448 7711	1			CAM, Cancelling
10	J448 7765	1			SPRING
11	J320 8008	1			WASHER
12	J812 9317	1			SPRING, Lower
13	J812 9335	1			SPRING, Upper
14	J448 7763	3			SCREW
15	J322 9970	1			SWITCH, Directional
16	J448 7741	1			PROTECTOR
17	J812 0097	1			SECTOR
18	J323 8343	1			KNOB
19	J448 7761	4			SCREW
20	J448 7713	1			CLIP
21	J321 1423	1			SWITCH, Buzzer
22	J448 7755	1			ROD
23	J448 8318	1			SCREW
24					LEVER, Directional Switch With Cruise Control
	J323 7116	1			1981: Four or Six Cylinder
	J322 6524	1			1981: Eight Cylinder
	J323 7116	1			1982-86 Without Cruise Control
	J536 2173	1			1981-86
25	J448 9046	1			HOUSING ASSEMBLY
26	J448 7799	1			GATE, Shift Lever
27	J448 7801	2			SCREW
28	J448 7774	1			SPRING
29	J319 6505	1			BRACKET
30	J323 0056	1			SEAL
31					BEZEL, Gear Selector
	J536 2838	1			Black
	J536 2839	1			Blue

MODEL CODES

16=Cherokee 2 Dr.(1981-83)
17=Cherokee 2 Dr.(1981-83)
73=Cherokee 2WD-2 Dr.(1984-86)
74=Cherokee 2WD-4 Dr.(1984-86)
18=Cherokee 4 Dr.(1981-83)
77=Cherokee 4WD-2 Dr.(1984-86)
78=Cherokee 4WD-4 Dr.(1984-86)
85=CJ-5 (1981-83)
86=CJ-6(1981)
87=CJ-7(1981-86)
88=CJ-8, Scrambler(1981-86)
64=Comanche 2WD-6 Ft. Box(1986)
66=Comanche 2WD-7 Ft. Box(1986)
63=Comanche 4WD-6 Ft. Box(1986)
65=Comanche 4WD-7 Ft. Box(1986)
15=Grand Wagoneer 4 Dr.(1984-86)
25=J-10 Truck 7 Ft. Box(1981-84)
26=J10 Truck 8 Ft. Box(1981-86)
27=J-20 Truck 8 Ft. Box(1981-86)
15=Wagoneer 4 Dr.(1981-83)
75=Wagoneer 4WD-4 Dr.(1984-86)

BODY
CJ=CJ-5, CJ-6, CJ-7, CJ-8, Scrambler(1981-86)
MJ=Comanche Pickup(1986)

STYLES
SJ=Wagoneer(1981-83), Grand Wagoneer(1984-86), Cherokee(1981-83), J-10, J-20(1981-86)
XJ=Wagoneer(1984-86), Cherokee(1984-86)

AR = Use as Required - = Non Illustrated Part P.A.R. = Paint as Required

« RETURN TO GROUP INDEX »

81J19 3500

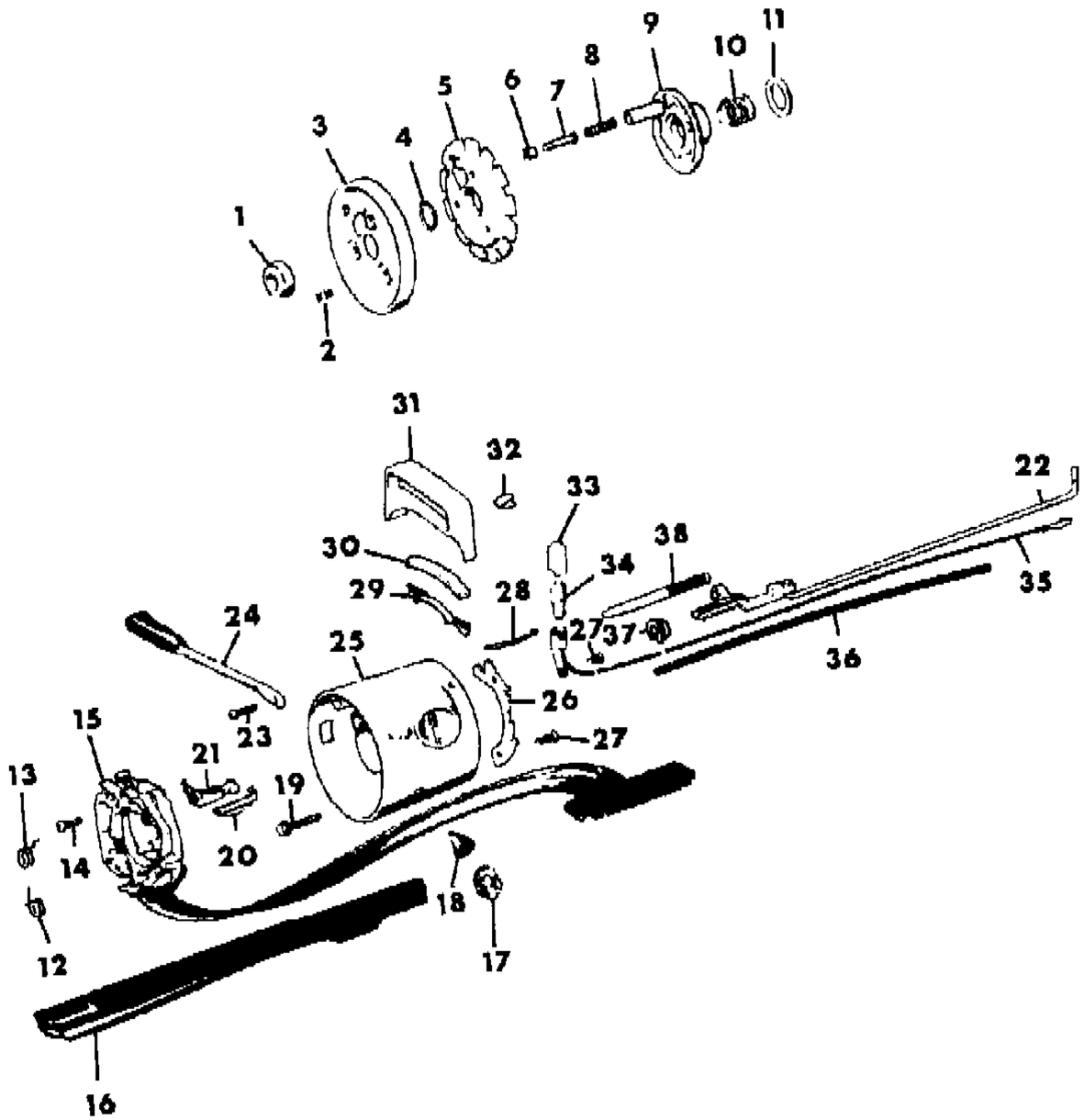

ITEM	PART NUMBER	QTY	BODY	MODEL	DESCRIPTION
	J536 2590	1			Nutmeg
	J536 2592	1			Medium Brown
32	J319 6503	1			CLIP
33	J319 6504	1			HOOD, Bulb ***
34	J345 1933	1			BULB
35	J448 7785	1			SOCKET ASSEMBLY
36	J448 7742	1			PROTECTOR
37	J448 7777	1			WASHER
38					BOLT, Locking
	J448 7897	1			
	J813 0676	1			EXPORT

MODEL CODES

16=Cherokee 2 Dr.(1981-83)	78=Cherokee 4WD-4 Dr.(1984-86)	64=Comanche 2WD-6 Ft. Box(1986)	25=J-10 Truck 7 Ft. Box(1981-84)
17=Cherokee 2 Dr.(1981-83)	85=CJ-5 (1981-83)	66=Comanche 2WD-7 Ft. Box(1986)	26=J10 Truck 8 Ft. Box(1981-86)
73=Cherokee 2WD-2 Dr.(1984-86)	86=CJ-6(1981)	63=Comanche 4WD-6 Ft. Box(1986)	27=J-20 Truck 8 Ft. Box(1981-86)
74=Cherokee 2WD-4 Dr.(1984-86)	87=CJ-7(1981-86)	65=Comanche 4WD-7 Ft. Box(1986)	15=Wagoneer 4 Dr.(1981-83)
18=Cherokee 4 Dr.(1981-83)	88=CJ-8, Scrambler(1981-86)	15=Grand Wagoneer 4 Dr.(1984-86)	75=Wagoneer 4WD-4 Dr.(1984-86)
77=Cherokee 4WD-2 Dr.(1984-86)			

BODY
CJ=CJ-5, CJ-6, CJ-7, CJ-8, Scrambler(1981-86)
MJ=Comanche Pickup(1986)

STYLES
SJ=Wagoneer(1981-83), Grand Wagoneer(1984-86), Cherokee(1981-83), J-10, J-20(1981-86)
XJ=Wagoneer(1984-86), Cherokee(1984-86)

AR = Use as Required - = Non Illustrated Part P.A.R. = Paint as Required

HOUSING, STEERING COLUMN LOWER WITH COLUMN SHIFT, WITHOUT TILT WHEEL SJ CHEROKEE, SJ WAGONEER, J10, J20
Figure 19-3600

81J19 3600

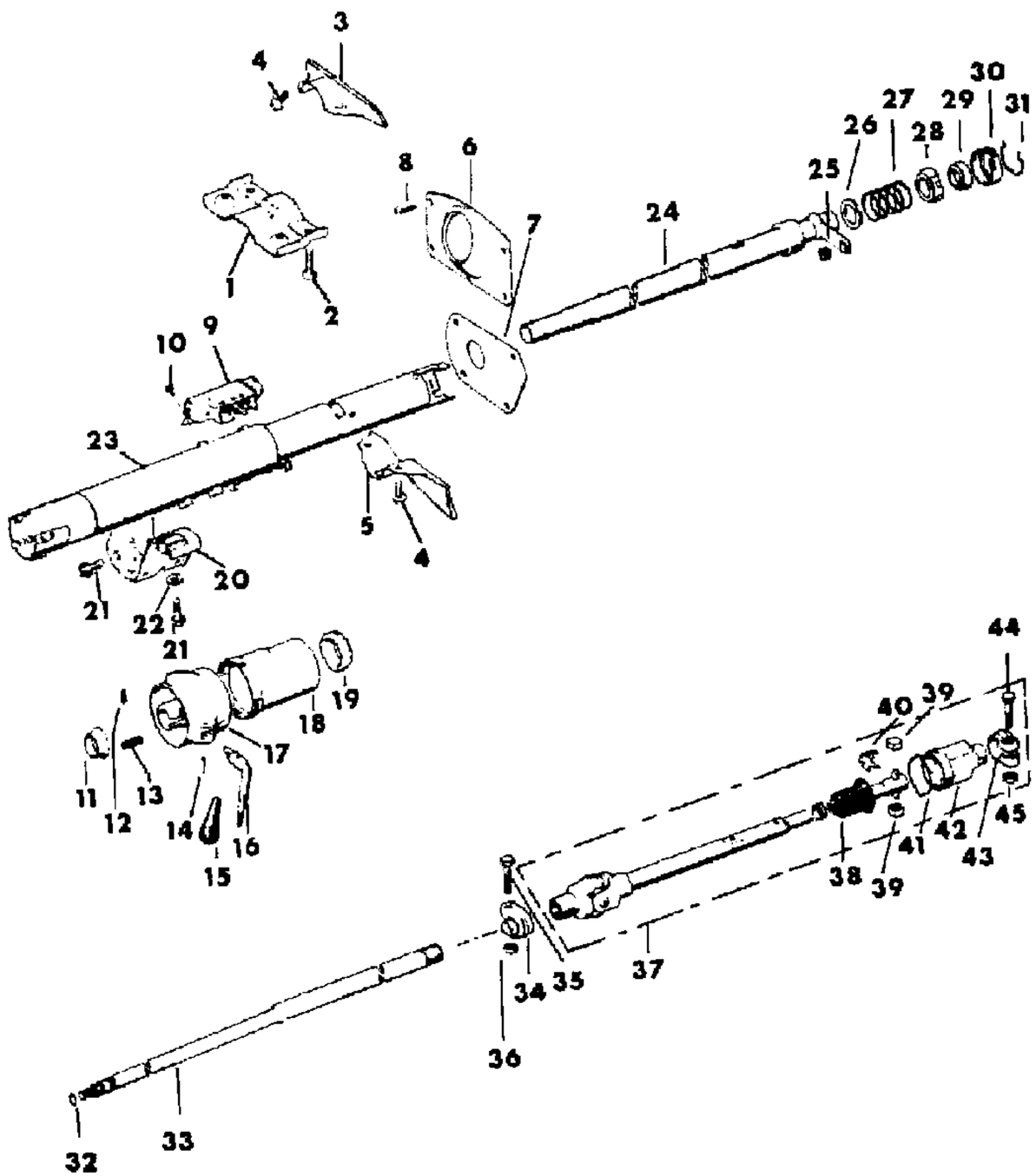

ITEM	PART NUMBER	QTY	BODY	MODEL	DESCRIPTION
1	J535 1229	1			ADAPTER
2	J400 5665	2			BOLT
3	J319 6870	1			PLATE
4	J027 3573	4			SCREW
5	J319 6897	1			PLATE
6	J535 4777	1			BEZEL
7	J319 6896	1			SEAL
8	J999 8220	4			SCREW
9	J812 8889	1			SWITCH, Ignition
10	J448 7772	2			SCREW
11	J448 7714	1			CUP
12	J321 5679	1			POINTER
13	J448 7791	1			SPRING
14	J400 3925	1			PIN
15	J321 6462	1			KNOB
16	J321 6464	1			LEVER ASSEMBLY
17	J448 9040	1			BOWL
18	J321 1169	1			SHROUD
19	J448 7716	1			BEARING
20	J535 1229	1			BRACKET
21	1150 2764	4			BOLT
22	J012 0388	4			WASHER
23	J813 0175	1			JACKET ASSEMBLY
24	J448 9041	1			TUBE ASSEMBLY
25	J319 4672	1			GROMMET
26	J448 7779	1			WASHER
27	J448 9045	1			SPRING
28	J448 7696	1			ADAPTER
29	J448 6713	1			BEARING
30	J448 7743	1			RETAINER
31	J448 7739	1			CLIP
32	J320 8377	1			RING, Snap
33	J812 8894	1			SHAFT ASSEMBLY, Column
34	J319 1827	1			CLAMP
35	J319 4110	1			BOLT
36	J448 8431	1			NUT
37					SHAFT ASSEMBLY, Lower
	J535 4934	1			With Power Steering
	J535 3135	1			Without Power Steering

MODEL CODES

16=Cherokee 2 Dr.(1981-83)
17=Cherokee 2 Dr.(1981-83)
73=Cherokee 2WD-2 Dr.(1984-86)
74=Cherokee 2WD-4 Dr.(1984-86)
18=Cherokee 4 Dr.(1981-83)
77=Cherokee 4WD-2 Dr.(1984-86)
78=Cherokee 4WD-4 Dr.(1984-86)
85=CJ-5 (1981-83)
86=CJ-6(1981)
87=CJ-7(1981-86)
88=CJ-8, Scrambler(1981-86)
64=Comanche 2WD-6 Ft. Box(1986)
66=Comanche 2WD-7 Ft. Box(1986)
63=Comanche 4WD-6 Ft. Box(1986)
65=Comanche 4WD-7 Ft. Box(1986)
15=Grand Wagoneer 4 Dr.(1984-86)
25=J-10 Truck 7 Ft. Box(1981-84)
26=J10 Truck 8 Ft. Box(1981-86)
27=J-20 Truck 8 Ft. Box(1981-86)
15=Wagoneer 4 Dr.(1981-83)
75=Wagoneer 4WD-4 Dr.(1984-86)

BODY
CJ=CJ-5, CJ-6, CJ-7, CJ-8, Scrambler(1981-86)
MJ=Comanche Pickup(1986)

STYLES
SJ=Wagoneer(1981-83), Grand Wagoneer(1984-86), Cherokee(1981-83), J-10, J-20(1981-86)
XJ=Wagoneer(1984-86), Cherokee(1984-86)

AR = Use as Required - = Non Illustrated Part P.A.R. = Paint as Required

« RETURN TO GROUP INDEX »

HOUSING, STEERING COLUMN LOWER WITH COLUMN SHIFT, WITHOUT TILT WHEEL SJ CHEROKEE, SJ WAGONEER, J10, J20
Figure 19-3600

81J19 3600

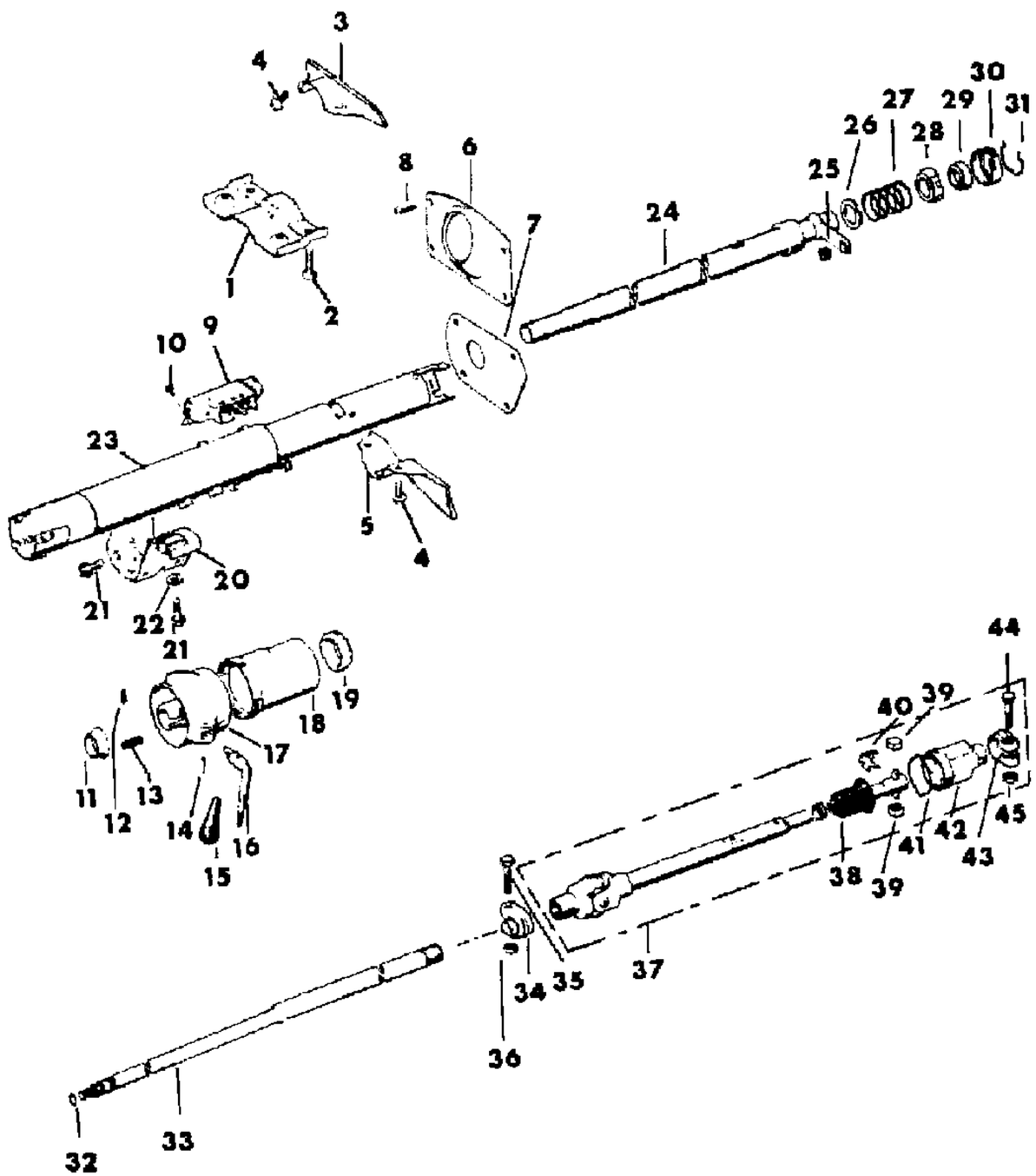

ITEM	PART NUMBER	QTY	BODY	MODEL	DESCRIPTION
38	J813 2676	1			BOOT
39	J320 4875	2			BEARING
40	J320 4878	1			SPRING
41	J448 6679	1			RING, Retaining
42					COUPLING, Lower Shaft
	J099 8710	1			With Power Steering
	J812 1299	1			Without Power Steering
43					CLAMP
	J099 4605	1			With Power Steering
	J099 4520	1			Without Power Steering
44					BOLT
	J099 4603	1			With Power Steering
	J319 4110	1			Without Power Steering
45					NUT
	J941 1783	1			With Power Steering
	J400 5653	1			Without Power Steering

MODEL CODES

16=Cherokee 2 Dr.(1981-83)
17=Cherokee 2 Dr.(1981-83)
73=Cherokee 2WD-2 Dr.(1984-86)
74=Cherokee 2WD-4 Dr.(1984-86)
18=Cherokee 4 Dr.(1981-83)
77=Cherokee 4WD-2 Dr.(1984-86)
78=Cherokee 4WD-4 Dr.(1984-86)
85=CJ-5 (1981-83)
86=CJ-6(1981)
87=CJ-7(1981-86)
88=CJ-8, Scrambler(1981-86)
64=Comanche 2WD-6 Ft. Box(1986)
66=Comanche 2WD-7 Ft. Box(1986)
63=Comanche 4WD-6 Ft. Box(1986)
65=Comanche 4WD-7 Ft. Box(1986)
15=Grand Wagoneer 4 Dr.(1984-86)
25=J-10 Truck 7 Ft. Box(1981-84)
26=J10 Truck 8 Ft. Box(1981-86)
27=J-20 Truck 8 Ft. Box(1981-86)
15=Wagoneer 4 Dr.(1981-83)
75=Wagoneer 4WD-4 Dr.(1984-86)

BODY
CJ=CJ-5, CJ-6, CJ-7, CJ-8, Scrambler(1981-86)
MJ=Comanche Pickup(1986)

STYLES
SJ=Wagoneer(1981-83), Grand Wagoneer(1984-86), Cherokee(1981-83), J-10, J-20(1981-86)
XJ=Wagoneer(1984-86), Cherokee(1984-86)

AR = Use as Required - = Non Illustrated Part P.A.R. = Paint as Required

« RETURN TO GROUP INDEX

«

HOUSING, STEERING COLUMN UPPER WITH COLUMN SHIFT, WITH TILT WHEEL 1981-85 SJ CHEROKEE, SJ WAGONEER, J10, J20
Figure 19-3700

81J19 3700

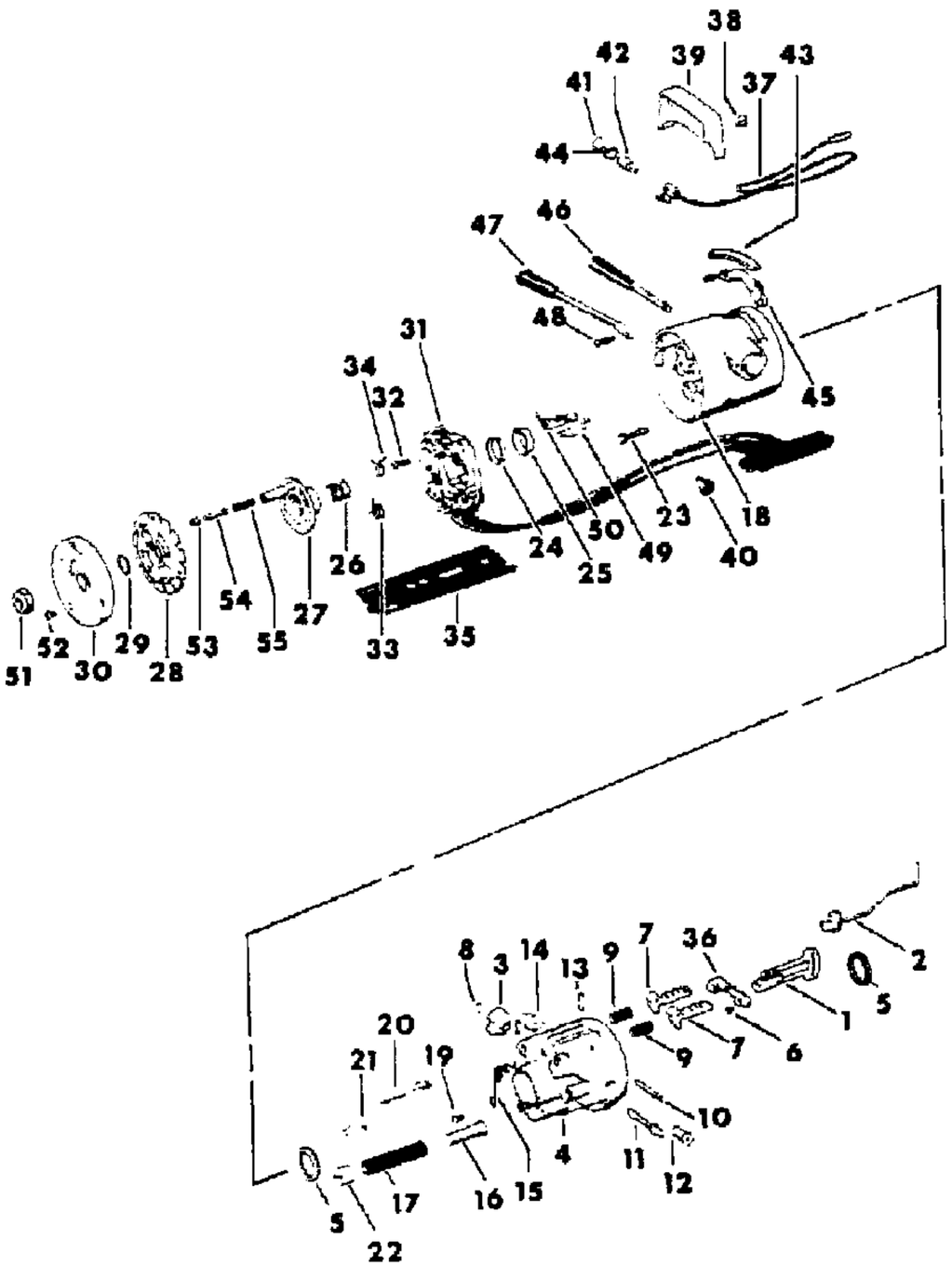

ITEM	PART NUMBER	QTY	BODY	MODEL	DESCRIPTION
1	J812 7870	1			RACK
2	J812 6162	1			ACTUATOR
3	J812 7859	1			SECTOR
4					HOUSING ASSEMBLY, Tilt Wheel
	J812 6158	1			1981-83
	8350 1114	1			1984-86
					EXPORT
	J813 0719	1			1981-83
	8350 1108	1			1984-86
5	J320 8362	2			BEARING
6	J320 8047	1			SPRING
7					SHOE
	J448 7828	1			Right
	J812 2716	1			Left
8	J448 7824	1			RING, Snap
9	J448 7832	2			SPRING, Shoe
10	J448 7822	1			PIN
11	J448 8213	1			SHAFT
12	J448 8418	2			PIN, Pivot
13	J320 8043	1			PIN, Release Lever
14	J448 7869	1			SHIELD
15	J448 7830	1			SPRING
16	J448 7854	1			GUIDE
17	J812 0252	1			SPRING, Wheel Tilt
18	J448 7850	1			COVER
19	J448 7827	1			SCREW
20					BOLT
	J448 7819	1			
	J325 1124	1			EXPORT
21	J448 7831	1			SPRING
22	J320 8143	1			RETAINER
23	J448 7867	4			SCREW
24	J448 7862	1			RACE
25	J812 2484	1			SEAT
26	J812 2485	1			SPRING
27	J448 7816	1			CAM, Cancelling
28					PLATE, Lock
	J812 7874	1			
	J325 1125	1			EXPORT

MODEL CODES

16=Cherokee 2 Dr.(1981-83)
17=Cherokee 2 Dr.(1981-83)
73=Cherokee 2WD-2 Dr.(1984-86)
74=Cherokee 2WD-4 Dr.(1984-86)
18=Cherokee 4 Dr.(1981-83)
77=Cherokee 4WD-2 Dr.(1984-86)
78=Cherokee 4WD-4 Dr.(1984-86)
85=CJ-5 (1981-83)
86=CJ-6(1981)
87=CJ-7(1981-86)
88=CJ-8, Scrambler(1981-86)
64=Comanche 2WD-6 Ft. Box(1986)
66=Comanche 2WD-7 Ft. Box(1986)
63=Comanche 4WD-6 Ft. Box(1986)
65=Comanche 4WD-7 Ft. Box(1986)
15=Grand Wagoneer 4 Dr.(1984-86)
25=J-10 Truck 7 Ft. Box(1981-84)
26=J10 Truck 8 Ft. Box(1981-86)
27=J-20 Truck 8 Ft. Box(1981-86)
15=Wagoneer 4 Dr.(1981-83)
75=Wagoneer 4WD-4 Dr.(1984-86)

BODY
CJ=CJ-5, CJ-6, CJ-7, CJ-8, Scrambler(1981-86)
MJ=Comanche Pickup(1986)

STYLES
SJ=Wagoneer(1981-83), Grand Wagoneer(1984-86), Cherokee(1981-83), J-10, J-20(1981-86)
XJ=Wagoneer(1984-86), Cherokee(1984-86)

AR = Use as Required - = Non Illustrated Part P.A.R. = Paint as Required

HOUSING, STEERING COLUMN UPPER WITH COLUMN SHIFT, WITH TILT WHEEL 1981-85 SJ CHEROKEE, SJ WAGONEER, J10, J20
Figure 19-3700

81J19 3700

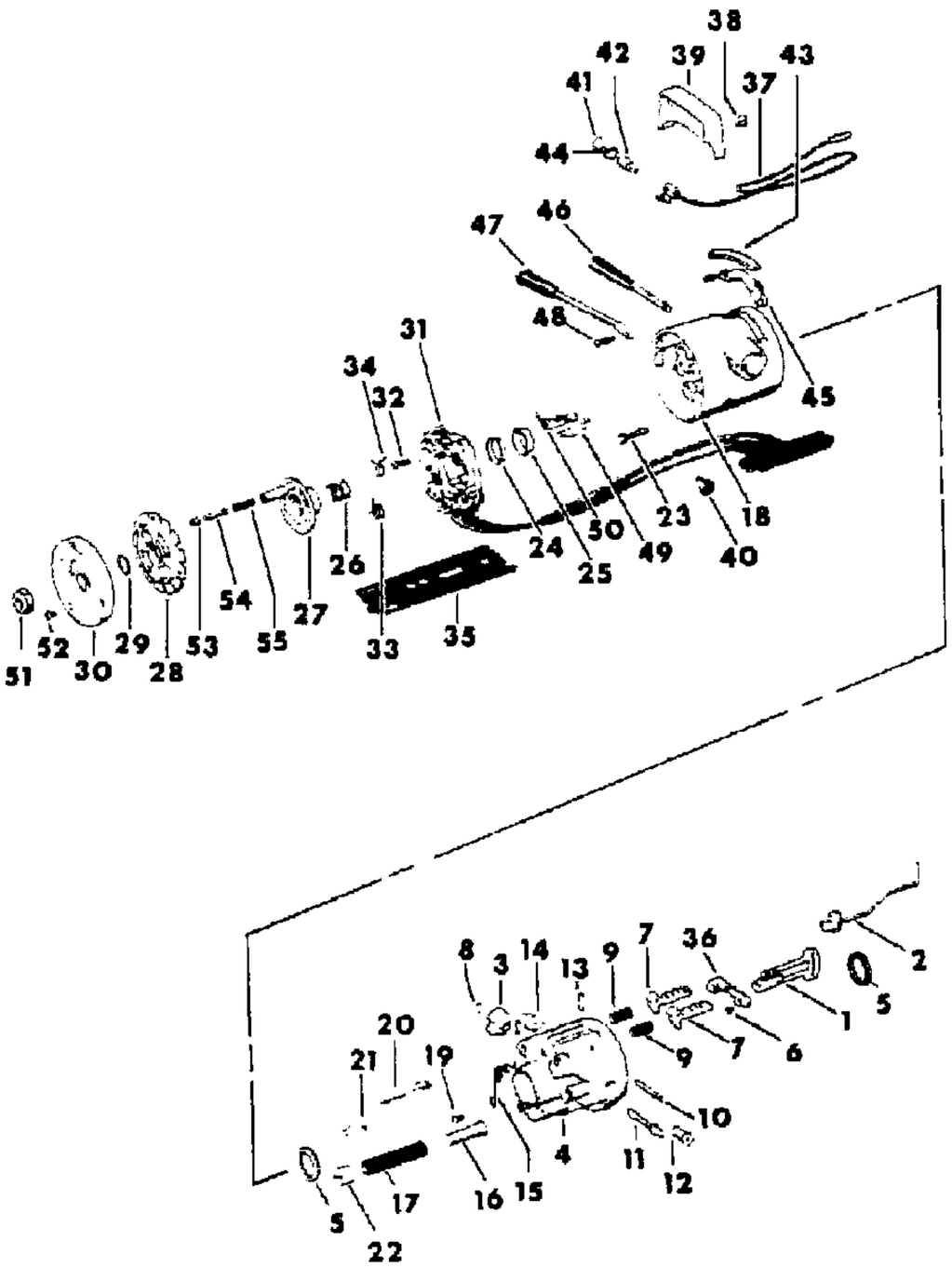

ITEM	PART NUMBER	QTY	BODY	MODEL	DESCRIPTION
29	J320 8377	1			RING, Snap
30	J322 8743	1			COVER
31	J322 9970	1			SWITCH, Directional
32	J448 8301	3			SCREW
33	J812 9317	1			SPRING, Lower
34	J812 9335	1			SPRING, Upper
35	J812 2486	1			PROTECTOR
36	J448 7821	1			LEVER, Shoe
37	J448 7846	1			SOCKET ASSEMBLY
38	J319 6686	1			SPRING
39					BEZEL, Gear Selector
	J536 2840	1			Black
	J536 2841	1			Blue
	J536 2594	1			Nutmeg
	J536 2596	1			Medium Brown
40	J323 8343	1			KNOB, Hazard Lights
41	J319 6687	1			HOOD ***
42	J320 4553	1			BULB
43	J323 0056	1			SEAL
44	J535 5991	1			FILTER
45	J448 7852	1			BRACKET
46	J318 6523	1			LEVER, Tilt Release
47					LEVER, Directional
					With Cruise Control
	J323 7116	1			1981: Four or Six Cylinder
	J322 6524	1			1981: Eight Cylinder
	J323 7116	1			1982-86
					Without Cruise Control
	J536 2173	1			1981-86
48	J448 8318	1			SCREW
49	J448 7853	1			CLIP
50	J321 1424	1			SWITCH, Buzzer
51	J420 0414	1			NUT
52	J400 3949	2			SCREW
53	J318 7257	1			RETAINER
54	J318 7249	1			PIN
55	J318 7255	1			SPRING

MODEL CODES
16=Cherokee 2 Dr.(1981-83)
17=Cherokee 2 Dr.(1981-83)
73=Cherokee 2WD-2 Dr.(1984-86)
74=Cherokee 2WD-4 Dr.(1984-86)
18=Cherokee 4 Dr.(1981-83)
77=Cherokee 4WD-2 Dr.(1984-86)
78=Cherokee 4WD-4 Dr.(1984-86)
85=CJ-5 (1981-83)
86=CJ-6(1981)
87=CJ-7(1981-86)
88=CJ-8, Scrambler(1981-86)
64=Comanche 2WD-6 Ft. Box(1986)
66=Comanche 2WD-7 Ft. Box(1986)
63=Comanche 4WD-6 Ft. Box(1986)
65=Comanche 4WD-7 Ft. Box(1986)
15=Grand Wagoneer 4 Dr.(1984-86)
25=J-10 Truck 7 Ft. Box(1981-84)
26=J10 Truck 8 Ft. Box(1981-86)
27=J-20 Truck 8 Ft. Box(1981-86)
15=Wagoneer 4 Dr.(1981-83)
75=Wagoneer 4WD-4 Dr.(1984-86)

BODY
CJ=CJ-5, CJ-6, CJ-7, CJ-8, Scrambler(1981-86)
MJ=Comanche Pickup(1986)

STYLES
SJ=Wagoneer(1981-83), Grand Wagoneer(1984-86), Cherokee(1981-83), J-10, J-20(1981-86)
XJ=Wagoneer(1984-86), Cherokee(1984-86)

AR = Use as Required - = Non Illustrated Part P.A.R. = Paint as Required

« RETURN TO GROUP INDEX

HOUSING, STEERING COLUMN LOWER WITH COLUMN SHIFT, WITH TILT WHEEL 1981-85 SJ CHEROKEE, SJ WAGONEER, J10, J20
Figure 19-3800

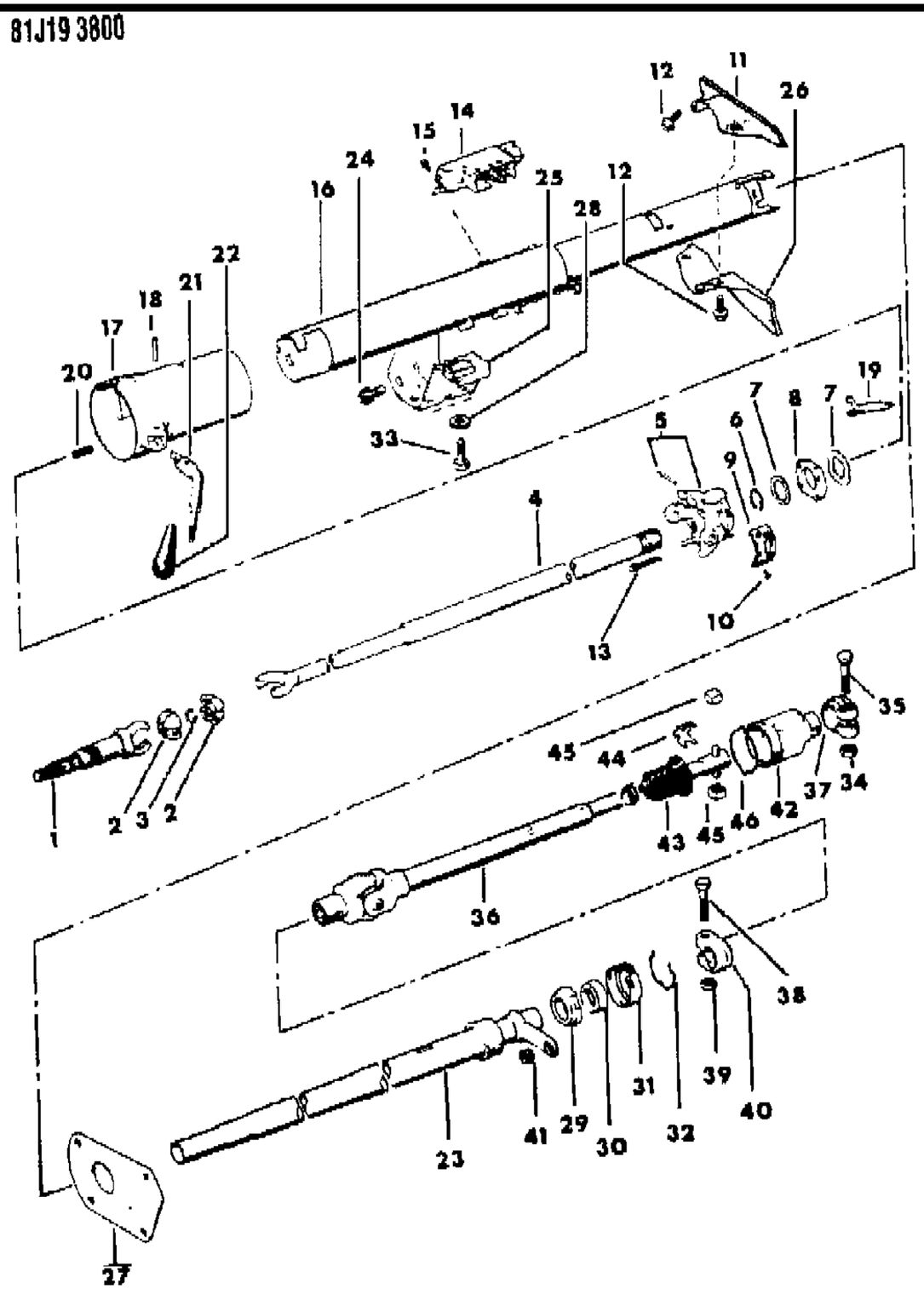

ITEM	PART NUMBER	QTY	BODY	MODEL	DESCRIPTION
1	J812 8888				SHAFT
2					SPHERE
	J448 7842	2			
	J812 7864	2			EXPORT
3	J448 7843	1			SPRING
4	J448 7840	1			SHAFT ASSEMBLY, Column
5					SUPPORT ASSEMBLY
	J448 7845	1			1981-83
	8350 1112	1			1984-86
6	J448 7864	1			CLIP
7					WASHER
	J448 7872	1			Thrust
	J448 7873	1			Wave
8	J448 7860	1			PLATE
9	J319 5616	1			GATE
10	J320 8210	1			SCREW
11	J319 6870	1			PLATE
12	J027 3573	4			SCREW
13	J448 7867	4			SCREW
14	J812 8890	1			SWITCH, Ignition
15	J448 7772	2			SCREW
16	J813 0178	1			JACKET ASSEMBLY
17	J319 6538	1			BOWL
18	J400 3925	1			PIN
19					POINTER
	J319 6688	1			1981-83
	J536 5063	1			1984-86
20	J812 0251	1			SPRING
21	J321 8720	1			LEVER ASSEMBLY
22	J321 6462	1			KNOB
23	J448 9059	1			TUBE ASSEMBLY
24	1150 2764	4			BOLT
25	J535 1229	1			BRACKET
26	J319 6897	1			PLATE
27	J319 6896	1			SEAL
28	J012 0388	2			WASHER
29	J448 7696	1			ADAPTER
30	J448 6713	1			BEARING
31	J448 7743	1			RETAINER

MODEL CODES
16=Cherokee 2 Dr.(1981-83)
17=Cherokee 2 Dr.(1981-83)
73=Cherokee 2WD-2 Dr.(1984-86)
74=Cherokee 2WD-4 Dr.(1984-86)
18=Cherokee 4 Dr.(1981-83)
77=Cherokee 4WD-2 Dr.(1984-86)
78=Cherokee 4WD-4 Dr.(1984-86)
85=CJ-5 (1981-83)
86=CJ-6(1981)
87=CJ-7(1981-86)
88=CJ-8, Scrambler(1981-86)
64=Comanche 2WD-6 Ft. Box(1986)
66=Comanche 2WD-7 Ft. Box(1986)
63=Comanche 4WD-6 Ft. Box(1986)
65=Comanche 4WD-7 Ft. Box(1986)
15=Grand Wagoneer 4 Dr.(1984-86)
25=J-10 Truck 7 Ft. Box(1981-84)
26=J10 Truck 8 Ft. Box(1981-86)
27=J-20 Truck 8 Ft. Box(1981-86)
15=Wagoneer 4 Dr.(1981-83)
75=Wagoneer 4WD-4 Dr.(1984-86)

BODY
CJ=CJ-5, CJ-6, CJ-7, CJ-8, Scrambler(1981-86)
MJ=Comanche Pickup(1986)

STYLES
SJ=Wagoneer(1981-83), Grand Wagoneer(1984-86), Cherokee(1981-83), J-10, J-20(1981-86)
XJ=Wagoneer(1984-86), Cherokee(1984-86)

AR = Use as Required - = Non Illustrated Part P.A.R. = Paint as Required

« RETURN TO GROUP INDEX »

HOUSING, STEERING COLUMN LOWER WITH COLUMN SHIFT, WITH TILT WHEEL 1981-85 SJ CHEROKEE, SJ WAGONEER, J10, J20
Figure 19-3800

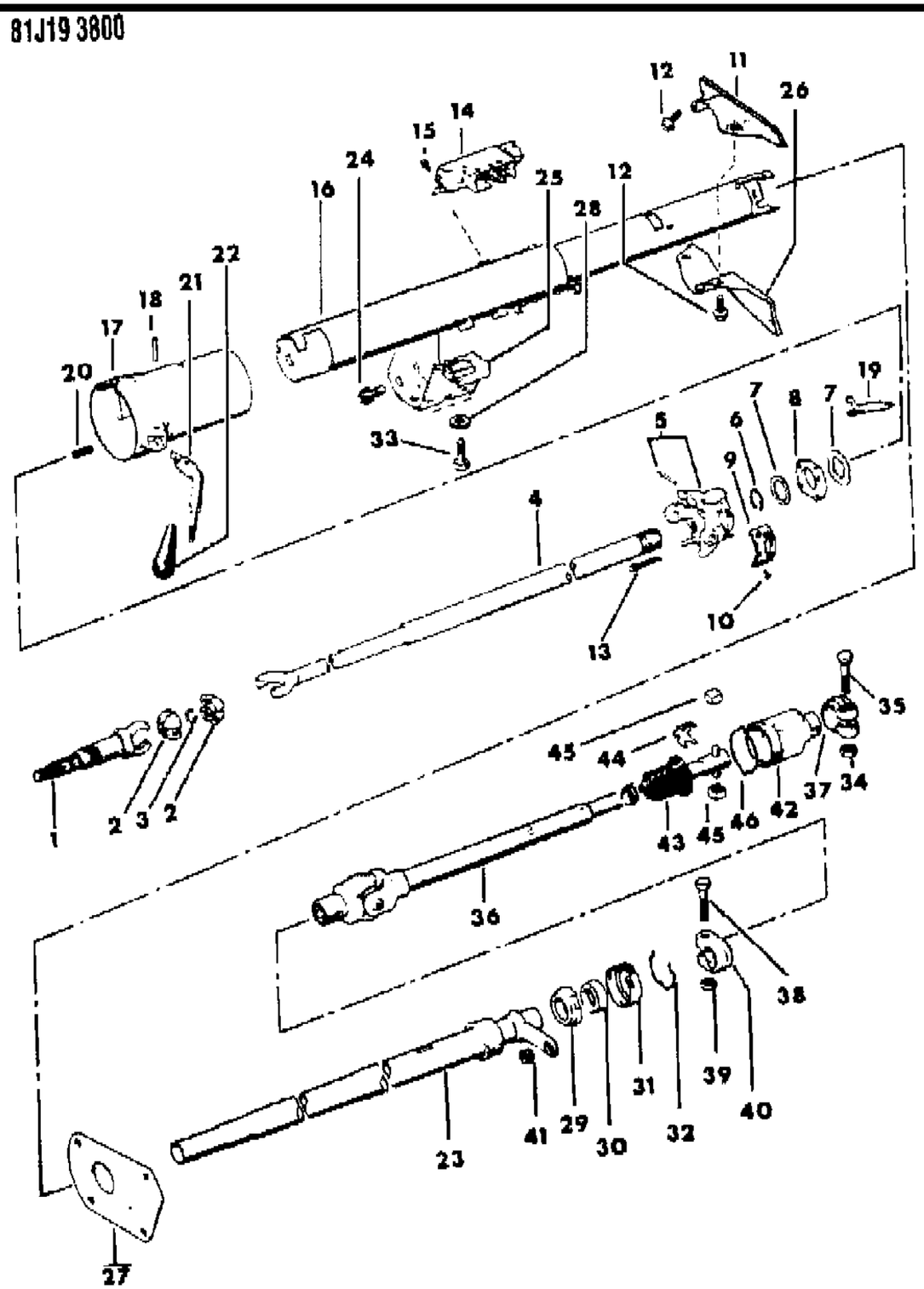

ITEM	PART NUMBER	QTY	BODY	MODEL	DESCRIPTION
32	J448 7739	1			CLIP
33	1150 2764	4			BOLT
34					NUT
	J941 1783	1			With Power Steering
	J400 5653	1			Without Power Steering
35					BOLT
	J099 4603	1			With Power Steering
	J319 4110	1			Without Power Steering
36					SHAFT ASSEMBLY, Lower
	J535 4934	1			With Power Steering
	J535 3135	1			Without Power Steering
37					CLAMP
	J099 4605	1			With Power Steering
	J099 4520	1			Without Power Steering
38	J319 4110	1			BOLT
39	J448 8431	1			NUT
40	J319 1827	1			CLAMP
41	J319 4672	1			GROMMET
42					COUPLING
	J099 8710	1			With Power Steering
	J812 1299	1			Without Power Steering
43	J813 2676	1			BOOT
44	J320 4878	1			SPRING
45	J320 4875	2			BEARING
46	J448 6679	1			CLIP

MODEL CODES
16=Cherokee 2 Dr.(1981-83)
17=Cherokee 2 Dr.(1981-83)
73=Cherokee 2WD-2 Dr.(1984-86)
74=Cherokee 2WD-4 Dr.(1984-86)
18=Cherokee 4 Dr.(1981-83)
77=Cherokee 4WD-2 Dr.(1984-86)
78=Cherokee 4WD-4 Dr.(1984-86)
85=CJ-5 (1981-83)
86=CJ-6(1981)
87=CJ-7(1981-86)
88=CJ-8, Scrambler(1981-86)
64=Comanche 2WD-6 Ft. Box(1986)
66=Comanche 2WD-7 Ft. Box(1986)
63=Comanche 4WD-6 Ft. Box(1986)
65=Comanche 4WD-7 Ft. Box(1986)
15=Grand Wagoneer 4 Dr.(1984-86)
25=J-10 Truck 7 Ft. Box(1981-84)
26=J10 Truck 8 Ft. Box(1981-86)
27=J-20 Truck 8 Ft. Box(1981-86)
15=Wagoneer 4 Dr.(1981-83)
75=Wagoneer 4WD-4 Dr.(1984-86)

BODY
CJ=CJ-5, CJ-6, CJ-7, CJ-8, Scrambler(1981-86)
MJ=Comanche Pickup(1986)

STYLES
SJ=Wagoneer(1981-83), Grand Wagoneer(1984-86), Cherokee(1981-83), J-10, J-20(1981-86)
XJ=Wagoneer(1984-86), Cherokee(1984-86)

AR = Use as Required - = Non Illustrated Part P.A.R. = Paint as Required

« RETURN TO GROUP INDEX

HOUSING, STEERING COLUMN UPPER WITH COLUMN SHIFT, WITH TILT WHEEL 1986 SJ WAGONEER, J10, J20
Figure 19-3900

81J19 3900

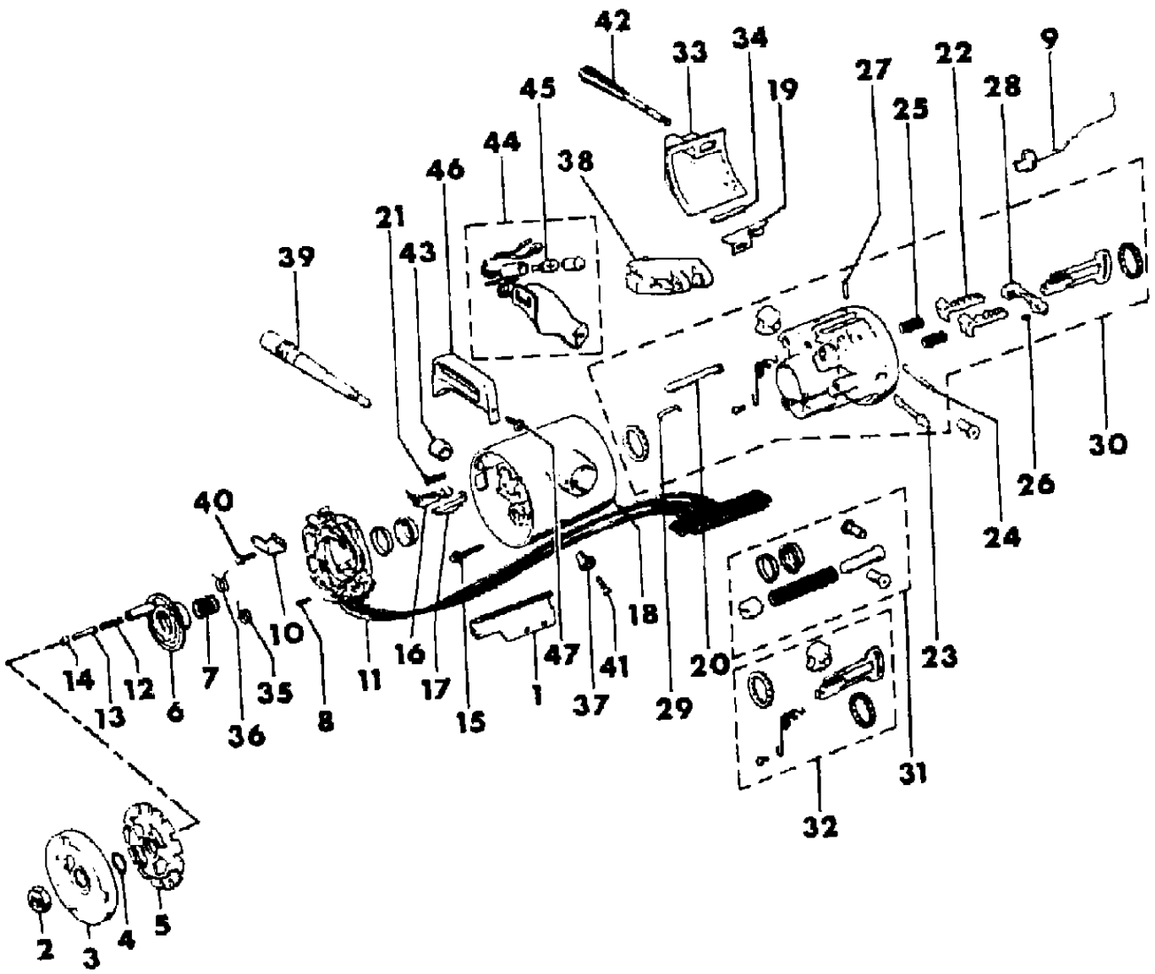

ITEM	PART NUMBER	QTY	BODY	MODEL	DESCRIPTION
1	8350 2566	1			PROTECTOR
2	J420 0414	1			NUT
3	J322 8743	1			COVER
4	J320 8377	1			RING, Snap
5	J812 7874	1			PLATE, Lock
6	J448 7816	1			CAM, Cancelling
7	J812 2485	1			SPRING
8	J448 8301	3			SCREW
9	8350 2573	1			ACTUATOR ASSEMBLY ***
10	8350 1575	1			ARM, Lever
11	5600 2011	1			SWITCH, Directional
12	J318 7255	1			SPRING
13	J318 7249	1			PIN
14	J318 7257	1			RETAINER
15	J813 3572	3			SCREW
16	J321 1424	1			SWITCH, Buzzer
17	J448 7853	1			CLIP
18	8350 2096	1			COVER ASSEMBLY
19	J813 3570	1			ACTUATOR, Dimmer
20	J448 7819	1			BOLT
21	8350 2103	1			SCREW
22					SHOE
	J448 7828	1			Right
	8350 2583	1			Left
23	J813 4191	1			SHAFT
24	J448 7822	1			PIN
25	J448 7832	2			SPRING
26	J320 8047	1			SPRING
27	J320 8043	1			PIN
28	J813 3567	1			LEVER
29	J448 7831	1			CLIP
30	8350 2582	1			HOUSING ASSEMBLY
31	8351 0054	1			GUIDE PACKAGE ***
32	8351 0055	1			RACK PACKAGE
33	J813 4704	1			CAP
34	J813 3565	1			PIN
35	J812 9317	1			SPRING, Lower
36	J812 9335	1			SPRING, Upper
37	J323 8343	1			KNOB

MODEL CODES
16=Cherokee 2 Dr.(1981-83)
17=Cherokee 2 Dr.(1981-83)
73=Cherokee 2WD-2 Dr.(1984-86)
74=Cherokee 2WD-4 Dr.(1984-86)
18=Cherokee 4 Dr.(1981-83)
77=Cherokee 4WD-2 Dr.(1984-86)
78=Cherokee 4WD-4 Dr.(1984-86)
85=CJ-5 (1981-83)
86=CJ-6(1981)
87=CJ-7(1981-86)
88=CJ-8, Scrambler(1981-86)
64=Comanche 2WD-6 Ft. Box(1986)
66=Comanche 2WD-7 Ft. Box(1986)
63=Comanche 4WD-6 Ft. Box(1986)
65=Comanche 4WD-7 Ft. Box(1986)
15=Grand Wagoneer 4 Dr.(1984-86)
25=J-10 Truck 7 Ft. Box(1981-84)
26=J10 Truck 8 Ft. Box(1981-86)
27=J-20 Truck 8 Ft. Box(1981-86)
15=Wagoneer 4 Dr.(1981-83)
75=Wagoneer 4WD-4 Dr.(1984-86)

BODY
CJ=CJ-5, CJ-6, CJ-7, CJ-8, Scrambler(1981-86)
MJ=Comanche Pickup(1986)

STYLES
SJ=Wagoneer(1981-83), Grand Wagoneer(1984-86), Cherokee(1981-83), J-10, J-20(1981-86)
XJ=Wagoneer(1984-86), Cherokee(1984-86)

AR = Use as Required - = Non Illustrated Part P.A.R. = Paint as Required

HOUSING, STEERING COLUMN UPPER WITH COLUMN SHIFT, WITH TILT WHEEL 1986 SJ WAGONEER, J10, J20
Figure 19-3900

81J19 3900

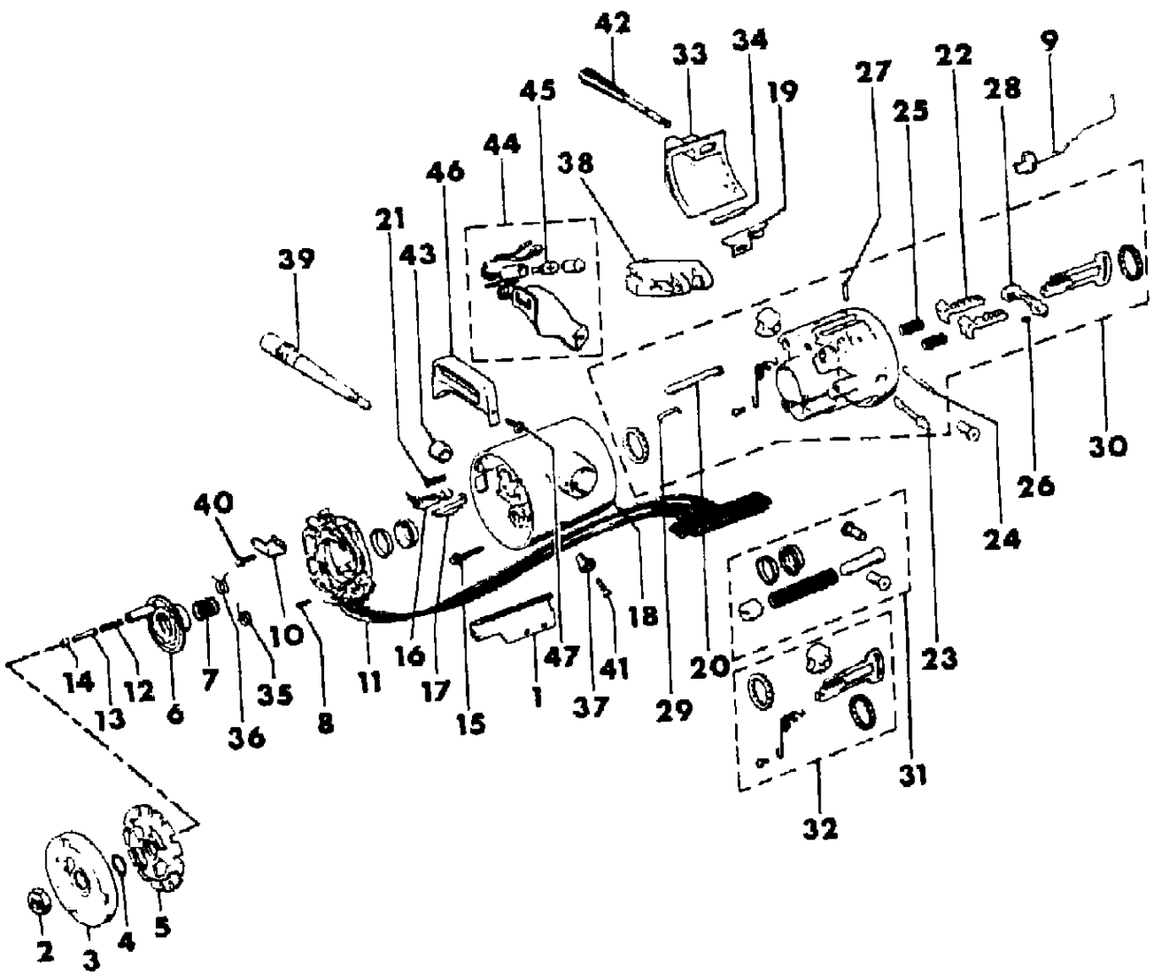

ITEM	PART NUMBER	QTY	BODY	MODEL	DESCRIPTION
38					SWITCH, Wiper
	5600 0033	1			With Intermittent Wipers
	5600 0431	1			Without Intermittent Wipers
39					LEVER, Directional Signal
					With Intermittent Wipers
	5600 0034	1			With Cruise Control
	5600 0433	1			Without Cruise Control
	5600 0432	1			Without Intermittent Wipers
40	J448 8301	1			SCREW
41	3420 2670	1			SCREW
42	J323 9880	1			LEVER, Release
43	5600 2285	1			INSULATOR
44	8350 2549	1			BRACKET
45	S943 6970	1			BULB
46	8350 2555	1			BEZEL
47	J400 4812	1			SCREW

MODEL CODES

16=Cherokee 2 Dr.(1981-83)
17=Cherokee 2 Dr.(1981-83)
73=Cherokee 2WD-2 Dr.(1984-86)
74=Cherokee 2WD-4 Dr.(1984-86)
18=Cherokee 4 Dr.(1981-83)
77=Cherokee 4WD-2 Dr.(1984-86)
78=Cherokee 4WD-4 Dr.(1984-86)
85=CJ-5 (1981-83)
86=CJ-6(1981)
87=CJ-7(1981-86)
88=CJ-8, Scrambler(1981-86)
64=Comanche 2WD-6 Ft. Box(1986)
66=Comanche 2WD-7 Ft. Box(1986)
63=Comanche 4WD-6 Ft. Box(1986)
65=Comanche 4WD-7 Ft. Box(1986)
15=Grand Wagoneer 4 Dr.(1984-86)
25=J-10 Truck 7 Ft. Box(1981-84)
26=J10 Truck 8 Ft. Box(1981-86)
27=J-20 Truck 8 Ft. Box(1981-86)
15=Wagoneer 4 Dr.(1981-83)
75=Wagoneer 4WD-4 Dr.(1984-86)

BODY
CJ=CJ-5, CJ-6, CJ-7, CJ-8, Scrambler(1981-86)
MJ=Comanche Pickup(1986)

STYLES
SJ=Wagoneer(1981-83), Grand Wagoneer(1984-86), Cherokee(1981-83), J-10, J-20(1981-86)
XJ=Wagoneer(1984-86), Cherokee(1984-86)

AR = Use as Required - = Non Illustrated Part P.A.R. = Paint as Required

HOUSING, STEERING COLUMN LOWER WITH COLUMN GEAR SHIFT, WITH TILT WHEEL 1986 SJ WAGONEER, J10, J20
Figure 19-4000

81J19 4000

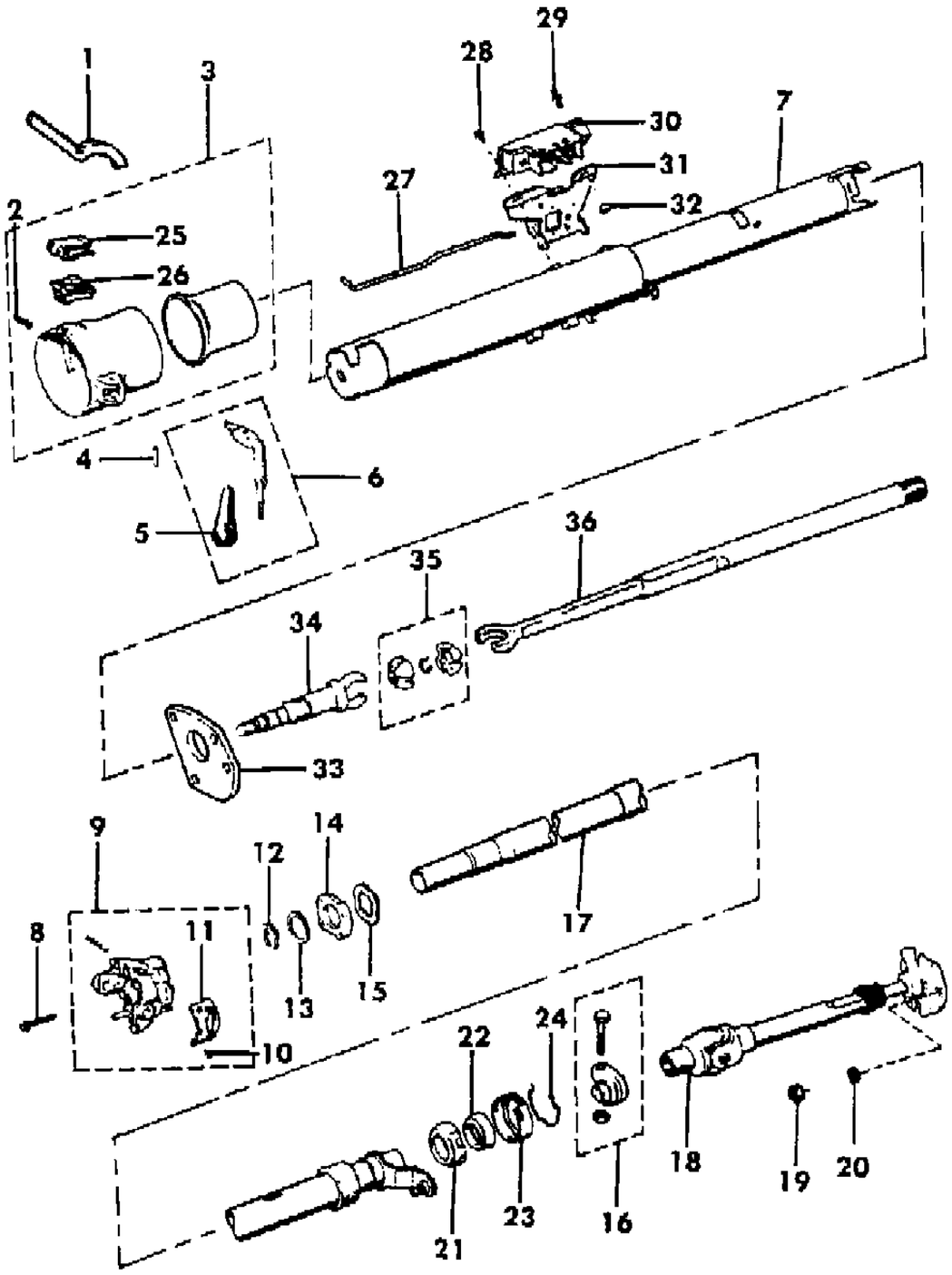

ITEM	PART NUMBER	QTY	BODY	MODEL	DESCRIPTION
1	8350 2565	1			POINTER
2	J812 0251	1			SPRING
3	8350 2607	1			BOWL
4	J400 3925	1			PIN
5	J321 6462	1			KNOB
6	J321 8720	1			LEVER ASSEMBLY
7	8350 2608	1			JACKET ASSEMBLY
8	J448 7867	4			BOLT
9	8350 2560	1			SUPPORT ASSEMBLY
10	J320 8210	1			SCREW
11	J319 5616	1			GATE
12	J448 7864	1			RING
13	J448 7872	1			WASHER, Flat
14	J448 7860	1			PLATE
15	J448 7873	1			WASHER, Wave
16	J320 9606	1			CLAMP ASSEMBLY ***
17	8350 2601	1			TUBE
18	J535 5766	1			SHAFT ASSEMBLY, Lower
19					NUT
	J012 0368	1			5/16"
	J012 0369	1			3/8"
20					WASHER
	J012 0214	1			5/16"
	J012 0382	1			3/8"
21	J448 7696	1			ADAPTER
22	J448 6713	1			BEARING
23	J448 7743	1			RETAINER
24	J448 7739	1			CLIP
25	8350 2572	1			CLIP
26	8350 2571	1			BRACKET
27	8350 2784	1			ROD
28	J448 7772	2			SCREW
29	J813 3546	1			STUD
30	J325 0575	1			SWITCH, Ignition
31	5600 2125	1			SWITCH, Dimmer
32	J012 0361	1			NUT
33	J319 6896	1			SEAL
34	J812 8888	1			SHAFT, Upper
35	8351 0056	1			SPHERE PACKAGE

MODEL CODES

16=Cherokee 2 Dr.(1981-83)
17=Cherokee 2 Dr.(1981-83)
73=Cherokee 2WD-2 Dr.(1984-86)
74=Cherokee 2WD-4 Dr.(1984-86)
18=Cherokee 4 Dr.(1981-83)
77=Cherokee 4WD-2 Dr.(1984-86)
78=Cherokee 4WD-4 Dr.(1984-86)
85=CJ-5 (1981-83)
86=CJ-6(1981)
87=CJ-7(1981-86)
88=CJ-8, Scrambler(1981-86)
64=Comanche 2WD-6 Ft. Box(1986)
66=Comanche 2WD-7 Ft. Box(1986)
63=Comanche 4WD-6 Ft. Box(1986)
65=Comanche 4WD-7 Ft. Box(1986)
15=Grand Wagoneer 4 Dr.(1984-86)
25=J-10 Truck 7 Ft. Box(1981-84)
26=J10 Truck 8 Ft. Box(1981-86)
27=J-20 Truck 8 Ft. Box(1981-86)
15=Wagoneer 4 Dr.(1981-83)
75=Wagoneer 4WD-4 Dr.(1984-86)

BODY
CJ=CJ-5, CJ-6, CJ-7, CJ-8, Scrambler(1981-86)
MJ=Comanche Pickup(1986)

STYLES
SJ=Wagoneer(1981-83), Grand Wagoneer(1984-86), Cherokee(1981-83), J-10, J-20(1981-86)
XJ=Wagoneer(1984-86), Cherokee(1984-86)

AR = Use as Required - = Non Illustrated Part P.A.R. = Paint as Required

« RETURN TO GROUP INDEX »

HOUSING, STEERING COLUMN LOWER WITH COLUMN GEAR SHIFT, WITH TILT WHEEL 1986 SJ WAGONEER, J10, J20
Figure 19-4000

81J19 4000

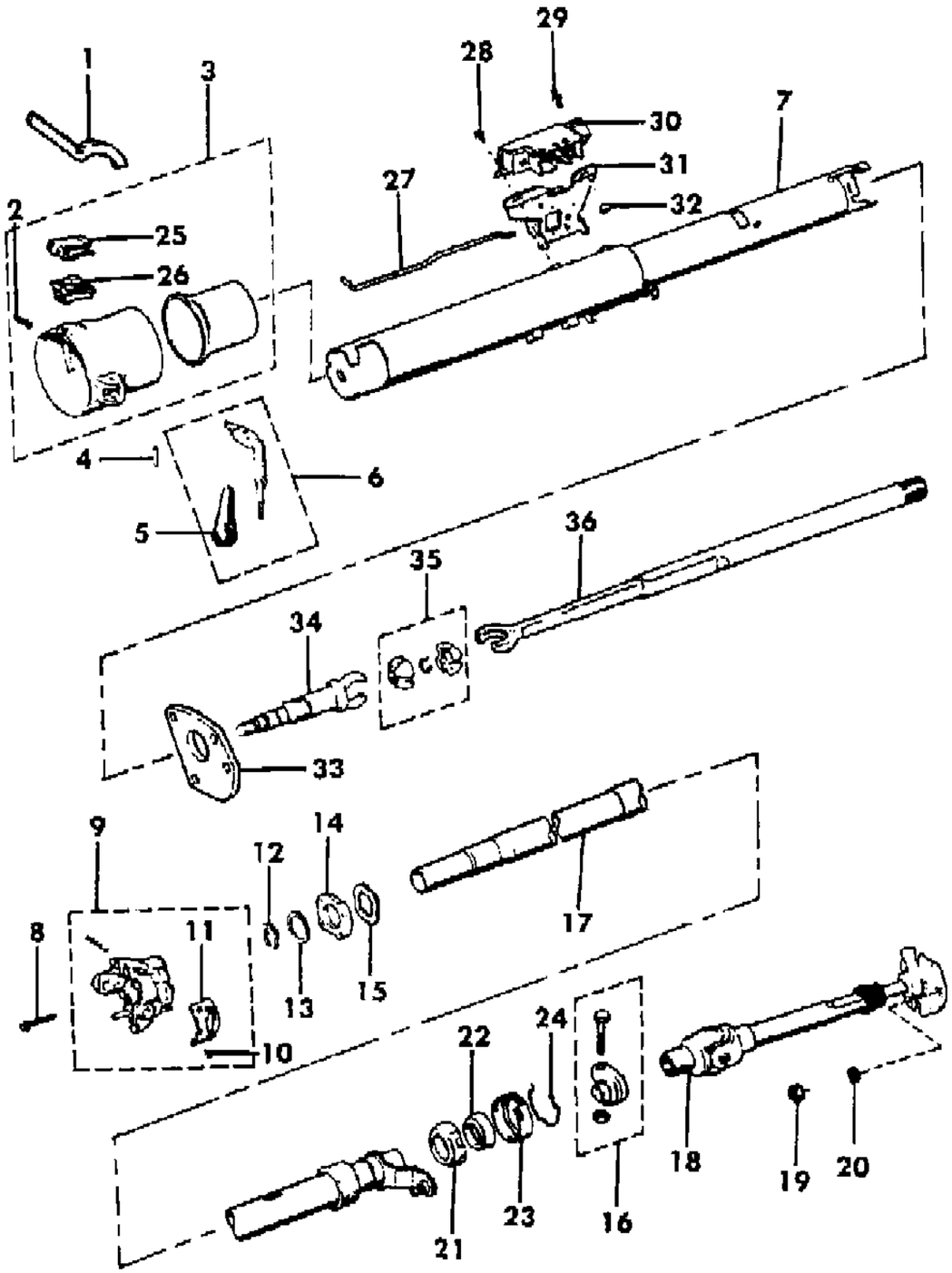

ITEM	PART NUMBER	QTY	BODY	MODEL	DESCRIPTION
36	8350 2602	1			SHAFT

MODEL CODES
16=Cherokee 2 Dr.(1981-83)
17=Cherokee 2 Dr.(1981-83)
73=Cherokee 2WD-2 Dr.(1984-86)
74=Cherokee 2WD-4 Dr.(1984-86)
18=Cherokee 4 Dr.(1981-83)
77=Cherokee 4WD-2 Dr.(1984-86)
78=Cherokee 4WD-4 Dr.(1984-86)
85=CJ-5 (1981-83)
86=CJ-6(1981)
87=CJ-7(1981-86)
88=CJ-8, Scrambler(1981-86)
64=Comanche 2WD-6 Ft. Box(1986)
66=Comanche 2WD-7 Ft. Box(1986)
63=Comanche 4WD-6 Ft. Box(1986)
65=Comanche 4WD-7 Ft. Box(1986)
15=Grand Wagoneer 4 Dr.(1984-86)
25=J-10 Truck 7 Ft. Box(1981-84)
26=J10 Truck 8 Ft. Box(1981-86)
27=J-20 Truck 8 Ft. Box(1981-86)
15=Wagoneer 4 Dr.(1981-83)
75=Wagoneer 4WD-4 Dr.(1984-86)

BODY
CJ=CJ-5, CJ-6, CJ-7, CJ-8, Scrambler(1981-86)
MJ=Comanche Pickup(1986)

STYLES
SJ=Wagoneer(1981-83), Grand Wagoneer(1984-86), Cherokee(1981-83), J-10, J-20(1981-86)
XJ=Wagoneer(1984-86), Cherokee(1984-86)

AR = Use as Required - = Non Illustrated Part P.A.R. = Paint as Required

« RETURN TO GROUP INDEX

GEAR, STEERING WITHOUT POWER STEERING CJ-5,6,7,8, SCRAMBLER
Figure 19-4100

81J19 4100

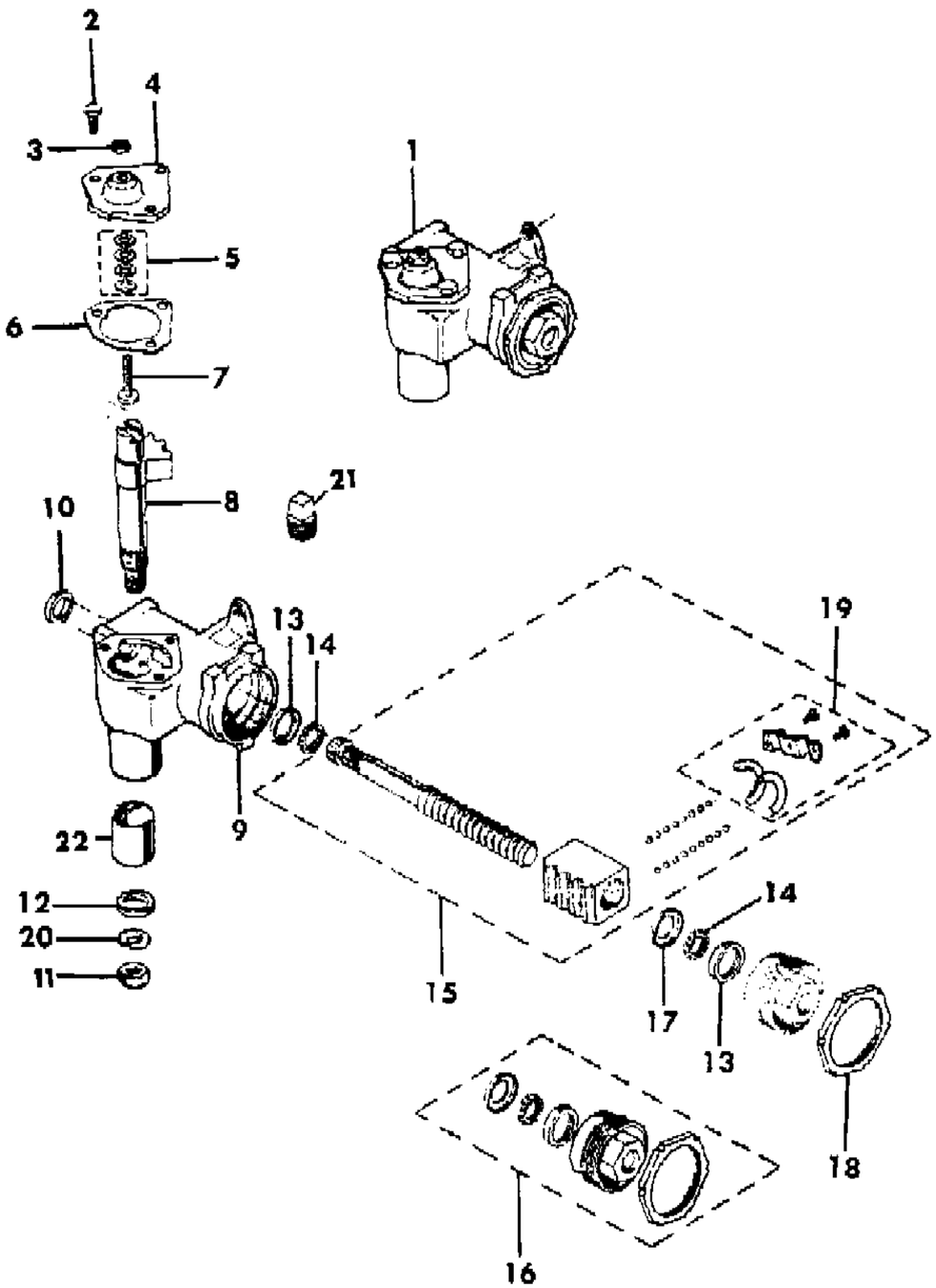

ITEM	PART NUMBER	QTY	BODY	MODEL	DESCRIPTION
1					GEAR, Steering
	J099 4509	1			1981-86
	J094 0922	1			1981-82: EXPORT, Right Hand Drive, with Ross Gear
	J599 4000	1			1982-86: EXPORT, Right Hand Drive, with Saginaw Gear
2					BOLT
	J099 2295	3			1981-86
	S012 0299	4			1981-82: EXPORT, Right Hand Drive, with Ross Gear
	J099 2295	3			1982-86: EXPORT, Right Hand Drive, with Saginaw Gear
3					NUT
	J999 7938	1			1981-86
	J094 0546	1			1981-82: EXPORT, Right Hand Drive, with Ross Gear
	J999 7938	1			1982-86: EXPORT, Right Hand Drive, with Saginaw Gear
4					COVER
	J448 6846	1			1981-86
	J094 0540	1			1981-82: EXPORT, Right Hand Drive, with Ross Gear
	J448 6846	1			1982-86: EXPORT, Right Hand Drive, with Saginaw Gear
5					SHIM PACKAGE ***
	J094 0521	1			1981-86
	J094 0521	1			1982-86: EXPORT, Right Hand Drive, with Saginaw Gear
6					GASKET
	J094 0522	1			1981-86
	J094 0554	1			1981-82: EXPORT, Right Hand Drive, with Ross Gear
	J094 0522	1			1982-86: EXPORT, Right Hand Drive, with Saginaw Gear
7					SCREW
	J448 6135	1			1981-86
	J094 0545	1			1981-82: EXPORT, Right Hand Drive, with Ross Gear
	J448 6135	1			1982-86: EXPORT, Right Hand Drive, with Saginaw Gear
8					SHAFT
	J812 0221	1			1981-86
	J094 1405	1			1981-82: EXPORT, Right Hand Drive, with Ross Gear
	J812 0221	1			1982-86: EXPORT, Right Hand Drive, with Saginaw Gear
9					HOUSING
	J813 0319	1			1981-86
	J812 1448	1			1981-82: EXPORT, Right Hand Drive, with Ross Gear
	J448 7883	1			1982-86: EXPORT, Right Hand Drive, with Saginaw Gear
10					SEAL
	J448 6141	1			1981-86
	J320 2618	1			1981-82: EXPORT, Right Hand Drive, with Ross Gear
	J448 6141	1			1982-86: EXPORT, Right Hand Drive, with Saginaw Gear

MODEL CODES
16=Cherokee 2 Dr.(1981-83)
17=Cherokee 2 Dr.(1981-83)
73=Cherokee 2WD-2 Dr.(1984-86)
74=Cherokee 2WD-4 Dr.(1984-86)
18=Cherokee 4 Dr.(1981-83)
77=Cherokee 4WD-2 Dr.(1984-86)
78=Cherokee 4WD-4 Dr.(1984-86)
85=CJ-5 (1981-83)
86=CJ-6(1981)
87=CJ-7(1981-86)
88=CJ-8, Scrambler(1981-86)
64=Comanche 2WD-6 Ft. Box(1986)
66=Comanche 2WD-7 Ft. Box(1986)
63=Comanche 4WD-6 Ft. Box(1986)
65=Comanche 4WD-7 Ft. Box(1986)
15=Grand Wagoneer 4 Dr.(1984-86)
25=J-10 Truck 7 Ft. Box(1981-84)
26=J10 Truck 8 Ft. Box(1981-86)
27=J-20 Truck 8 Ft. Box(1981-86)
15=Wagoneer 4 Dr.(1981-83)
75=Wagoneer 4WD-4 Dr.(1984-86)

BODY
CJ=CJ-5, CJ-6, CJ-7, CJ-8, Scrambler(1981-86)
MJ=Comanche Pickup(1986)

STYLES
SJ=Wagoneer(1981-83), Grand Wagoneer(1984-86), Cherokee(1981-83), J-10, J-20(1981-86)
XJ=Wagoneer(1984-86), Cherokee(1984-86)

AR = Use as Required - = Non Illustrated Part P.A.R. = Paint as Required

GEAR, STEERING WITHOUT POWER STEERING CJ-5,6,7,8, SCRAMBLER
Figure 19-4100

81J19 4100

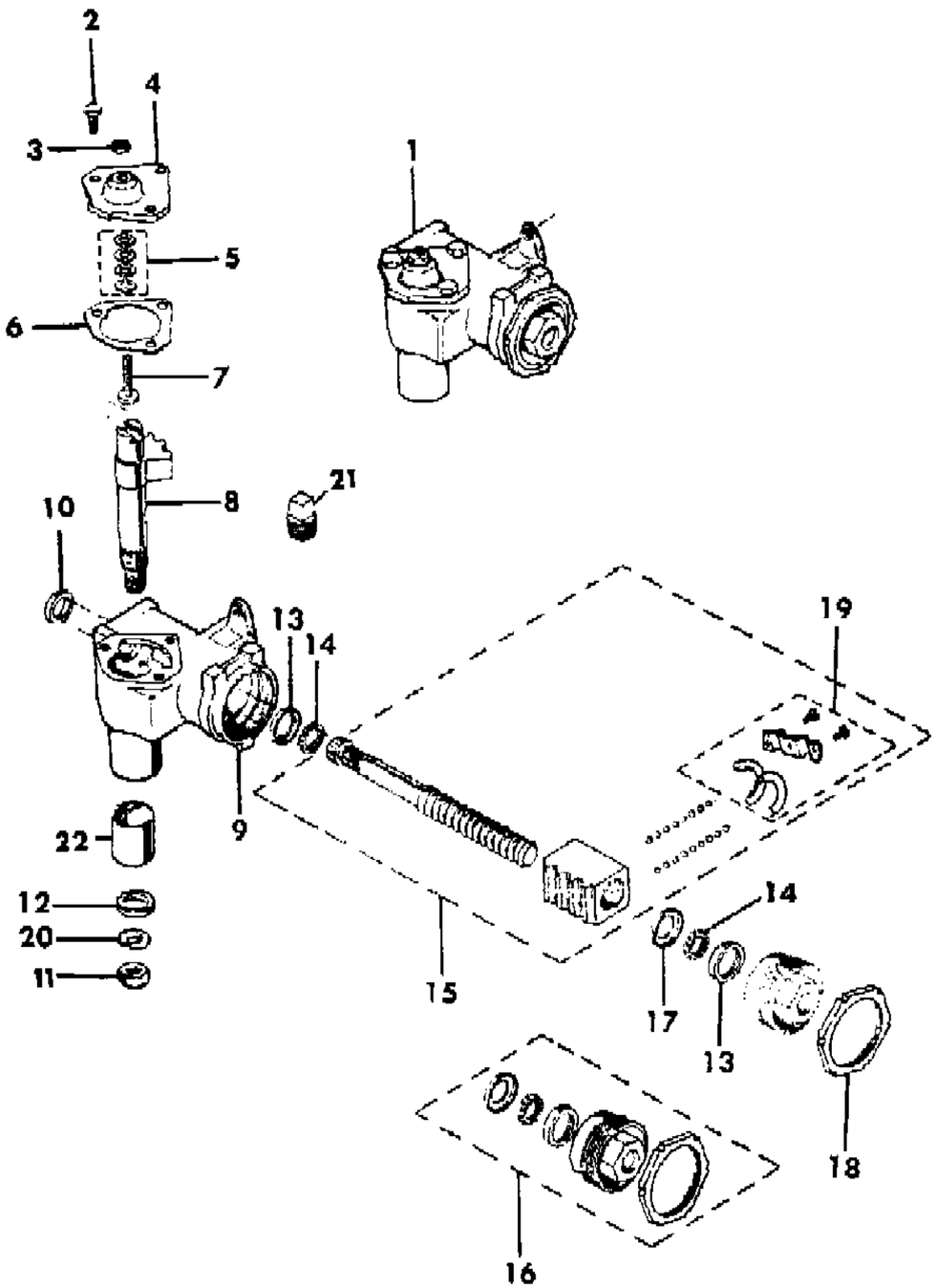

ITEM	PART NUMBER	QTY	BODY	MODEL	DESCRIPTION
11	J320 0501	1			NUT
12					SEAL
	J448 6140	1			1981-86
	J094 0555	1			1981-82: EXPORT, Right Hand Drive, with Ross Gear
	J448 6140	1			1982-86: EXPORT, Right Hand Drive, with Saginaw Gear
13					CUP
	J320 0492	2			1981-86
					1981-82: EXPORT, Right Hand Drive, with Ross Gear
	J094 0552	1			Upper
	J094 0551	1			Lower
	J320 0492	2			1982-86: EXPORT, Right Hand Drive, with Saginaw Gear
14					BEARING
	J320 0491	2			1981-86
	J813 3258	2			1981-82: EXPORT, Right Hand Drive, with Ross Gear
	J320 0491	2			1982-86: EXPORT, Right Hand Drive, with Saginaw Gear
15					SHAFT PACKAGE
	J099 8504	1			1981-86
	J094 1406	1			1981-82: EXPORT, Right Hand Drive, with Ross Gear
	J813 4427	1			1982-86: EXPORT, Right Hand Drive, with Saginaw Gear
16					ADJUSTER PACKAGE ***
	J320 6119	1			1981-86
	J320 6119	1			1982-86: EXPORT, Right Hand Drive, with Saginaw Gear
17					RETAINER
	J320 0493	1			1981-86
	J320 0493	1			1982-86: EXPORT, RIGHT Hand Drive, with Saginaw Gear
18					NUT
	J094 0533	1			1981-86
	J094 0533	1			1982-86: EXPORT, Right Hand Drive, with Saginaw Gear
19					GUIDE PACKAGE ***
	J320 5677	1			1981-86
	J320 5677	1			1982-86: EXPORT, Right Hand Drive, with Saginaw Gear
20	S010 3336	1			WASHER
21					PLUG
	J094 3338	1			1981-82: EXPORT, Right Hand Drive, with Ross Gear
22					BUSHING
	J320 0496	1			1981-86
	J094 0538	1			1981-82: EXPORT, Right Hand Drive, with Ross Gear
	J320 0496	1			1982-86: EXPORT, Right Hand Drive, with Saginaw Gear

MODEL CODES

16=Cherokee 2 Dr.(1981-83)
17=Cherokee 2 Dr.(1981-83)
73=Cherokee 2WD-2 Dr.(1984-86)
74=Cherokee 2WD-4 Dr.(1984-86)
18=Cherokee 4 Dr.(1981-83)
77=Cherokee 4WD-2 Dr.(1984-86)
78=Cherokee 4WD-4 Dr.(1984-86)
85=CJ-5 (1981-83)
86=CJ-6(1981)
87=CJ-7(1981-86)
88=CJ-8, Scrambler(1981-86)
64=Comanche 2WD-6 Ft. Box(1986)
66=Comanche 2WD-7 Ft. Box(1986)
63=Comanche 4WD-6 Ft. Box(1986)
65=Comanche 4WD-7 Ft. Box(1986)
15=Grand Wagoneer 4 Dr.(1984-86)
25=J-10 Truck 7 Ft. Box(1981-84)
26=J10 Truck 8 Ft. Box(1981-86)
27=J-20 Truck 8 Ft. Box(1981-86)
15=Wagoneer 4 Dr.(1981-83)
75=Wagoneer 4WD-4 Dr.(1984-86)

BODY
CJ=CJ-5, CJ-6, CJ-7, CJ-8, Scrambler(1981-86)
MJ=Comanche Pickup(1986)

STYLES
SJ=Wagoneer(1981-83), Grand Wagoneer(1984-86), Cherokee(1981-83), J-10, J-20(1981-86)
XJ=Wagoneer(1984-86), Cherokee(1984-86)

AR = Use as Required - = Non Illustrated Part P.A.R. = Paint as Required

« RETURN TO GROUP INDEX

GEAR, STEERING WITH POWER STEERING CJ-5,6,7,8, SCRAMBLER
Figure 19-4200

81J19 4200

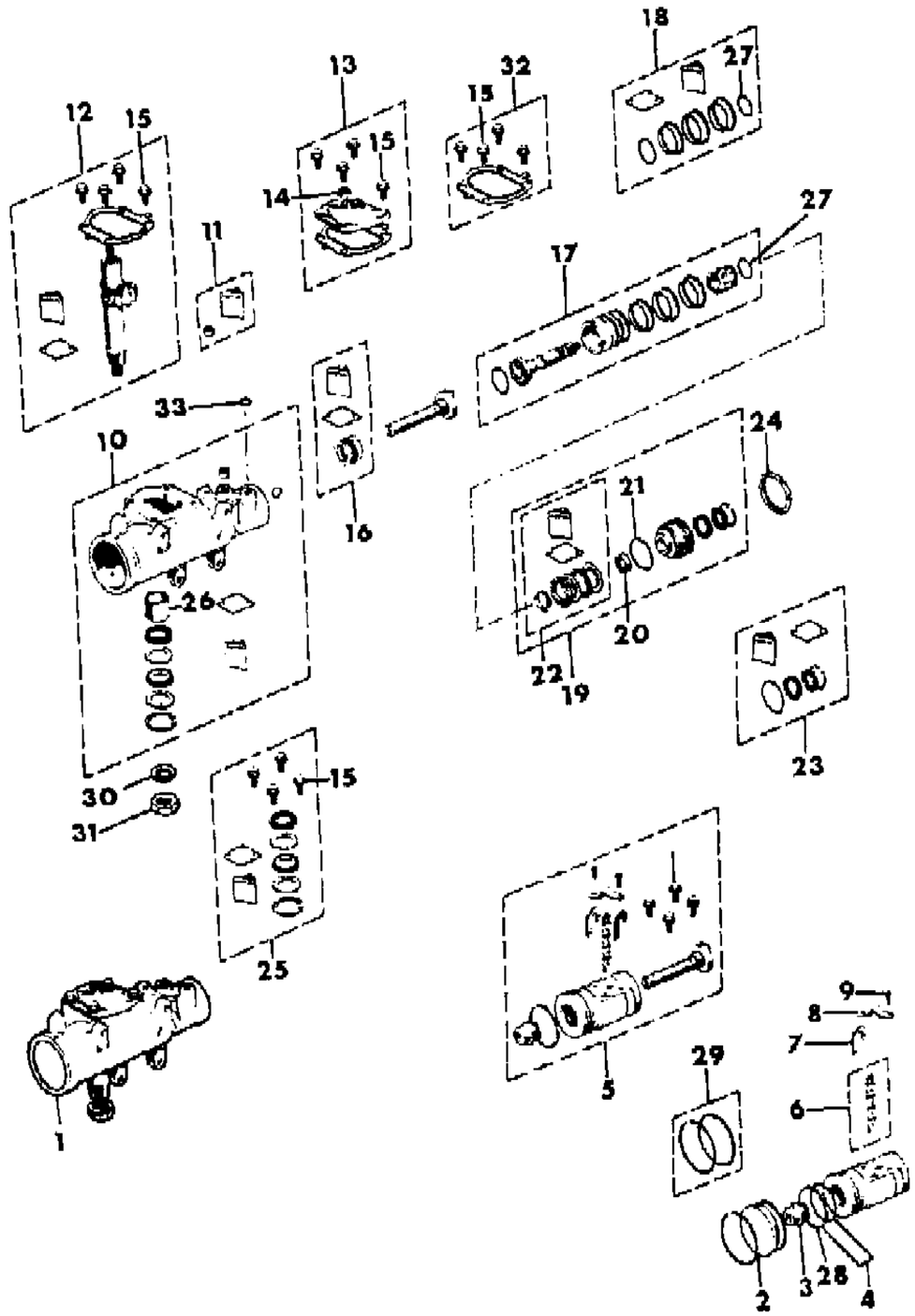

ITEM	PART NUMBER	QTY	BODY	MODEL	DESCRIPTION
1					GEAR, Steering
	J536 0092	1			1981: With Constant Ratio Gear, Stamped VJ
	J536 3231	1			1981-86: With Variable Ratio Gear, Stamped EF
	J536 1222	1			1981-86: EXPORT, Right Hand Drive
2	J320 4820	1			PLUG
3	J812 7965	1			PLUG
4	J812 5039	1			SEAL PACKAGE
5					RACK PACKAGE
	J812 5471	1			1981: With Constant Ratio Gear, Stamped VJ
	J813 4372	1			1981-86: With Variable Ratio Gear, Stamped EF
6	J320 4836	1			BALL PACKAGE
7	J094 0707	2			GUIDE
8	J320 4812	1			CLAMP
9	J320 7057	2			SCREW
10	J813 2537	1			HOUSING PACKAGE ***
11	J813 2538	1			CHECK VALVE PACKAGE ***
12					SHAFT PACKAGE
	J812 2819	1			1981: With Constant Ratio Gear, Stamped VJ
	J812 2958	1			1981-86: With Variable Ratio Gear, Stamped EF
	J812 2819	1			1981-86: EXPORT, Right Hand Drive
13	J812 5033	1			COVER PACKAGE ***
14	J320 4818	1			NUT
15	J812 4191	4			BOLT
16	J812 7645	1			BEARING PACKAGE
17					VALVE PACKAGE
	J812 1746	1			
	J813 4428	1			EXPORT, Right Hand Drive
18	J320 4833	1			RING AND SEAL PACKAGE ***
19	J812 5035	1			ADJUSTER PACKAGE ***
20	J320 4803	1			BEARING
21	J812 6247	1			O-RING
22	J812 7644	1			BEARING PACKAGE
23	J320 4824	1			SEAL PACKAGE
24	J812 8427	1			NUT
25	J320 4830	1			SEAL PACKAGE
26	J448 7154	1			BEARING
27	J812 6250	1			O-RING
28	J320 4814	1			RING, Piston
29	J094 0703	1			RING, Retaining

MODEL CODES

16=Cherokee 2 Dr.(1981-83)
17=Cherokee 2 Dr.(1981-83)
73=Cherokee 2WD-2 Dr.(1984-86)
74=Cherokee 2WD-4 Dr.(1984-86)
18=Cherokee 4 Dr.(1981-83)
77=Cherokee 4WD-2 Dr.(1984-86)
78=Cherokee 4WD-4 Dr.(1984-86)
85=CJ-5 (1981-83)
86=CJ-6(1981)
87=CJ-7(1981-86)
88=CJ-8, Scrambler(1981-86)
64=Comanche 2WD-6 Ft. Box(1986)
66=Comanche 2WD-7 Ft. Box(1986)
63=Comanche 4WD-6 Ft. Box(1986)
65=Comanche 4WD-7 Ft. Box(1986)
15=Grand Wagoneer 4 Dr.(1984-86)
25=J-10 Truck 7 Ft. Box(1981-84)
26=J10 Truck 8 Ft. Box(1981-86)
27=J-20 Truck 8 Ft. Box(1981-86)
15=Wagoneer 4 Dr.(1981-83)
75=Wagoneer 4WD-4 Dr.(1984-86)

BODY
CJ=CJ-5, CJ-6, CJ-7, CJ-8, Scrambler(1981-86)
MJ=Comanche Pickup(1986)

STYLES
SJ=Wagoneer(1981-83), Grand Wagoneer(1984-86), Cherokee(1981-83), J-10, J-20(1981-86)
XJ=Wagoneer(1984-86), Cherokee(1984-86)

AR = Use as Required - = Non Illustrated Part P.A.R. = Paint as Required

81J19 4200

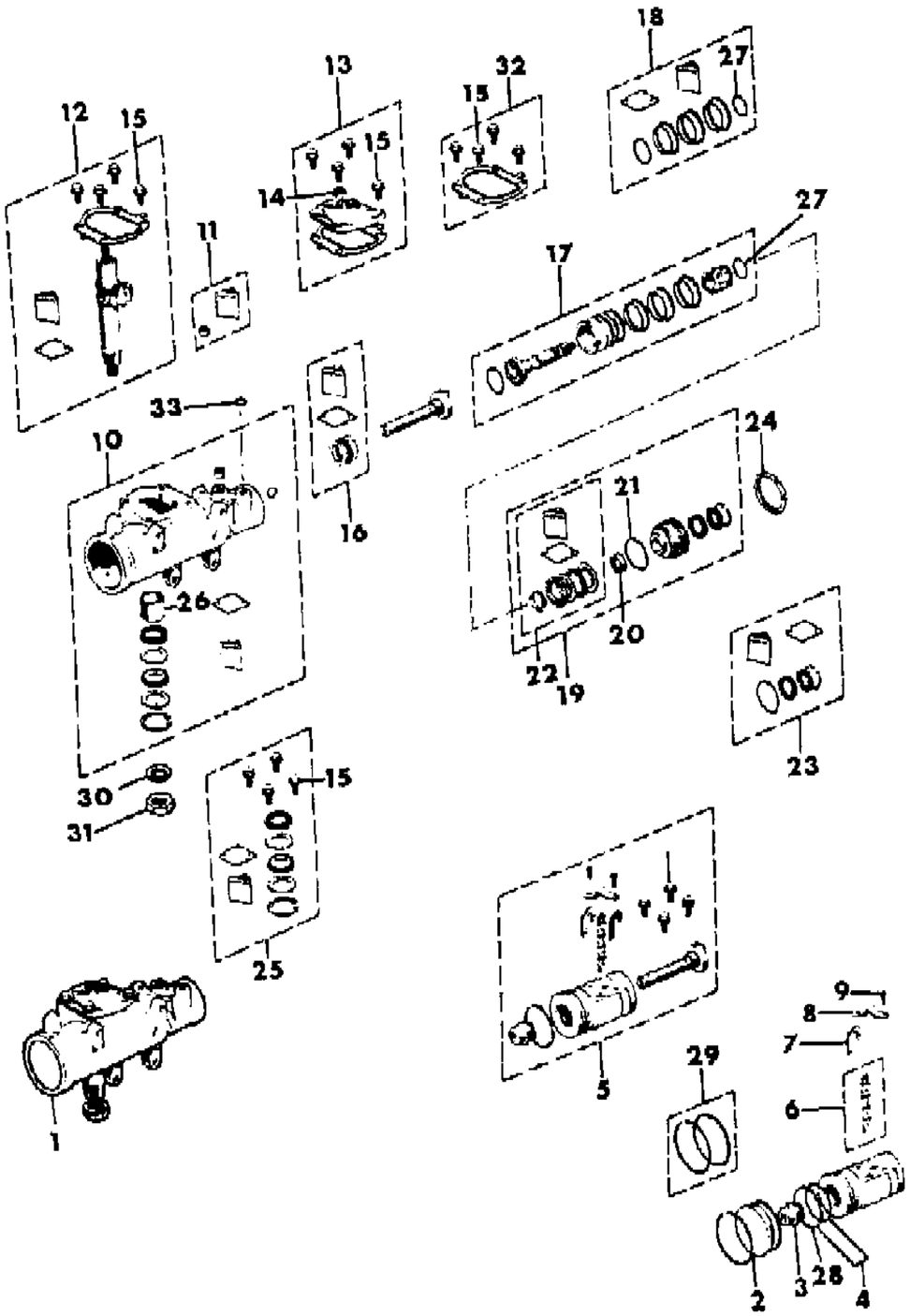

ITEM	PART NUMBER	QTY	BODY	MODEL	DESCRIPTION
30	S010 3336	1			WASHER
31	J320 0501	1			NUT
32	J812 5038	1			GASKET PACKAGE ***
33	J325 1183	2			O-RING

MODEL CODES
16=Cherokee 2 Dr.(1981-83)
17=Cherokee 2 Dr.(1981-83)
73=Cherokee 2WD-2 Dr.(1984-86)
74=Cherokee 2WD-4 Dr.(1984-86)
18=Cherokee 4 Dr.(1981-83)
77=Cherokee 4WD-2 Dr.(1984-86)
78=Cherokee 4WD-4 Dr.(1984-86)
85=CJ-5 (1981-83)
86=CJ-6(1981)
87=CJ-7(1981-86)
88=CJ-8, Scrambler(1981-86)
64=Comanche 2WD-6 Ft. Box(1986)
66=Comanche 2WD-7 Ft. Box(1986)
63=Comanche 4WD-6 Ft. Box(1986)
65=Comanche 4WD-7 Ft. Box(1986)
15=Grand Wagoneer 4 Dr.(1984-86)
25=J-10 Truck 7 Ft. Box(1981-84)
26=J10 Truck 8 Ft. Box(1981-86)
27=J-20 Truck 8 Ft. Box(1981-86)
15=Wagoneer 4 Dr.(1981-83)
75=Wagoneer 4WD-4 Dr.(1984-86)

BODY
CJ=CJ-5, CJ-6, CJ-7, CJ-8, Scrambler(1981-86)
MJ=Comanche Pickup(1986)

STYLES
SJ=Wagoneer(1981-83), Grand Wagoneer(1984-86), Cherokee(1981-83), J-10, J-20(1981-86)
XJ=Wagoneer(1984-86), Cherokee(1984-86)

AR = Use as Required - = Non Illustrated Part P.A.R. = Paint as Required

GEAR MOUNTING, STEERING CJ-5,6,7,8, SCRAMBLER
Figure 19-4300

81J19 4300

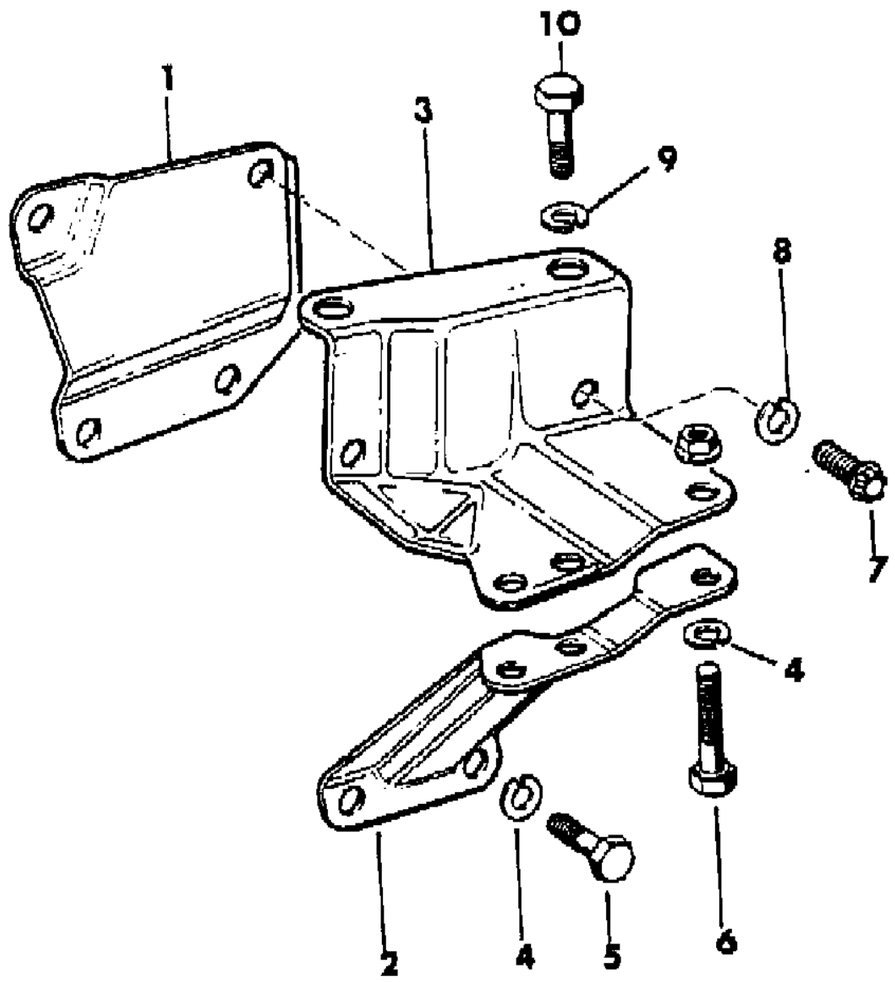

ITEM	PART NUMBER	QTY	BODY	MODEL	DESCRIPTION
1					PLATE, Mounting
	J535 5962	1			
	J535 5963	1			EXPORT, Right Hand Drive
2					BRACKET, Lower
	J812 7536	1			
					EXPORT, Right Hand Drive
	J535 9748	1			With Power Steering
	J812 7537	1			Without Power Steering
3					BRACKET, Upper
	J535 5446	1			
					EXPORT, Right Hand Drive
	J535 9609	1			With Power Steering
	J535 5447	1			Without Power Steering
					EXPORT, Severe Use
	J535 5447	1			Right
	J535 5446	1			Left
4	J400 5633	2			WASHER
5	J400 5826	2			BOLT
6	J400 5824	3			BOLT
7	J400 4968	2			BOLT
8	J400 4809	2			WASHER
9	J400 6809	2			WASHER
10	J400 6813	2			BOLT

MODEL CODES

16=Cherokee 2 Dr.(1981-83)	78=Cherokee 4WD-4 Dr.(1984-86)	64=Comanche 2WD-6 Ft. Box(1986)	25=J-10 Truck 7 Ft. Box(1981-84)
17=Cherokee 2 Dr.(1981-83)	85=CJ-5 (1981-83)	66=Comanche 2WD-7 Ft. Box(1986)	26=J10 Truck 8 Ft. Box(1981-86)
73=Cherokee 2WD-2 Dr.(1984-86)	86=CJ-6(1981)	63=Comanche 4WD-6 Ft. Box(1986)	27=J-20 Truck 8 Ft. Box(1981-86)
74=Cherokee 2WD-4 Dr.(1984-86)	87=CJ-7(1981-86)	65=Comanche 4WD-7 Ft. Box(1986)	15=Wagoneer 4 Dr.(1981-83)
18=Cherokee 4 Dr.(1981-83)	88=CJ-8, Scrambler(1981-86)	15=Grand Wagoneer 4 Dr.(1984-86)	75=Wagoneer 4WD-4 Dr.(1984-86)
77=Cherokee 4WD-2 Dr.(1984-86)			

BODY
CJ=CJ-5, CJ-6, CJ-7, CJ-8, Scrambler(1981-86)
MJ=Comanche Pickup(1986)

STYLES
SJ=Wagoneer(1981-83), Grand Wagoneer(1984-86), Cherokee(1981-83), J-10, J-20(1981-86)
XJ=Wagoneer(1984-86), Cherokee(1984-86)

AR = Use as Required - = Non Illustrated Part P.A.R. = Paint as Required

« RETURN TO GROUP INDEX

GEAR, STEERING WITHOUT POWER STEERING XJ CHEROKEE, XJ WAGONEER, COMANCHE
Figure 19-4400

81J19 4400

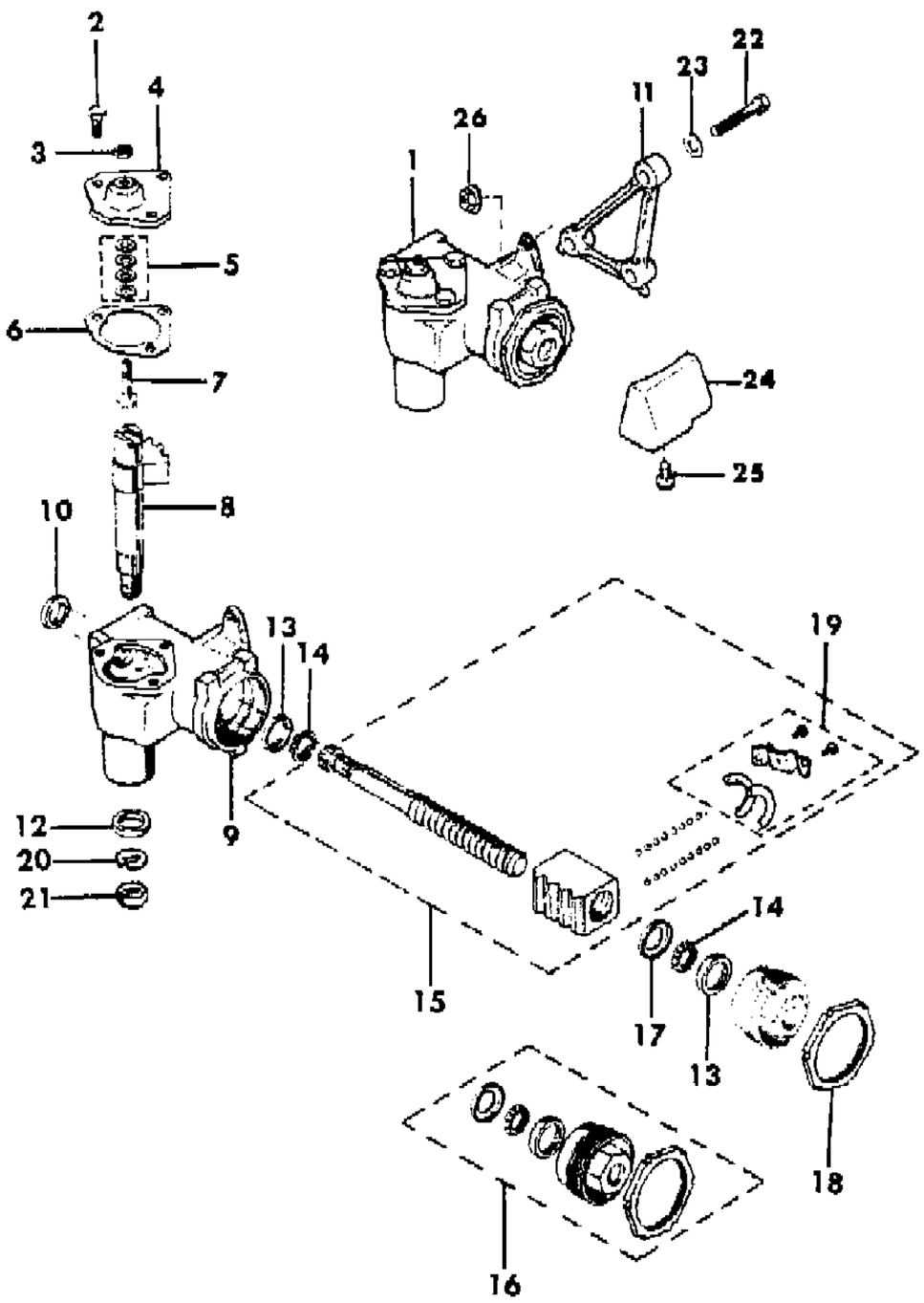

ITEM	PART NUMBER	QTY	BODY	MODEL	DESCRIPTION
1	5200 0089	1			GEAR, Steering
2	J099 2295	3			BOLT
3	J999 7938	1			NUT
4	J448 6846	1			COVER, Gear
5	J094 0521	1			SHIM KIT ***
6	J094 0522	1			GASKET
7	J448 6135	1			SCREW
8	J812 0221	1			SHAFT
9	J813 0319	1			HOUSING, Steering Gear
10	J448 6141	1			SEAL
11	5200 0090	1			ADAPTER
12	J448 6140	1			SEAL
13	J320 0492	1			CUP
14	J320 0491	1			BEARING
15	8350 0248	1			SHAFT
16	J320 6119	1			ADJUSTER
17	J320 0493	1			RETAINER
18	J094 0533	1			NUT
19	J320 5677	1			GUIDE
20	S010 3336	1			WASHER
21	J320 0501	1			NUT
22	J400 3972	3			BOLT
23	J400 3926	3			WASHER
24	5200 0881	1			BLOCK, Steering Gear
25	3420 1193	1			SCREW
26	J400 7043	1			NUT

MODEL CODES

16=Cherokee 2 Dr.(1981-83)
17=Cherokee 2 Dr.(1981-83)
73=Cherokee 2WD-2 Dr.(1984-86)
74=Cherokee 2WD-4 Dr.(1984-86)
18=Cherokee 4 Dr.(1981-83)
77=Cherokee 4WD-2 Dr.(1984-86)
78=Cherokee 4WD-4 Dr.(1984-86)
85=CJ-5 (1981-83)
86=CJ-6(1981)
87=CJ-7(1981-86)
88=CJ-8, Scrambler(1981-86)
64=Comanche 2WD-6 Ft. Box(1986)
66=Comanche 2WD-7 Ft. Box(1986)
63=Comanche 4WD-6 Ft. Box(1986)
65=Comanche 4WD-7 Ft. Box(1986)
15=Grand Wagoneer 4 Dr.(1984-86)
25=J-10 Truck 7 Ft. Box(1981-84)
26=J10 Truck 8 Ft. Box(1981-86)
27=J-20 Truck 8 Ft. Box(1981-86)
15=Wagoneer 4 Dr.(1981-83)
75=Wagoneer 4WD-4 Dr.(1984-86)

BODY
CJ=CJ-5, CJ-6, CJ-7, CJ-8, Scrambler(1981-86)
MJ=Comanche Pickup(1986)

STYLES
SJ=Wagoneer(1981-83), Grand Wagoneer(1984-86), Cherokee(1981-83), J-10, J-20(1981-86)
XJ=Wagoneer(1984-86), Cherokee(1984-86)

AR = Use as Required - = Non Illustrated Part P.A.R. = Paint as Required

« RETURN TO GROUP INDEX

GEAR, STEERING WITH POWER STEERING XJ CHEROKEE, XJ WAGONEER, COMANCHE
Figure 19-4500

81J19 4500

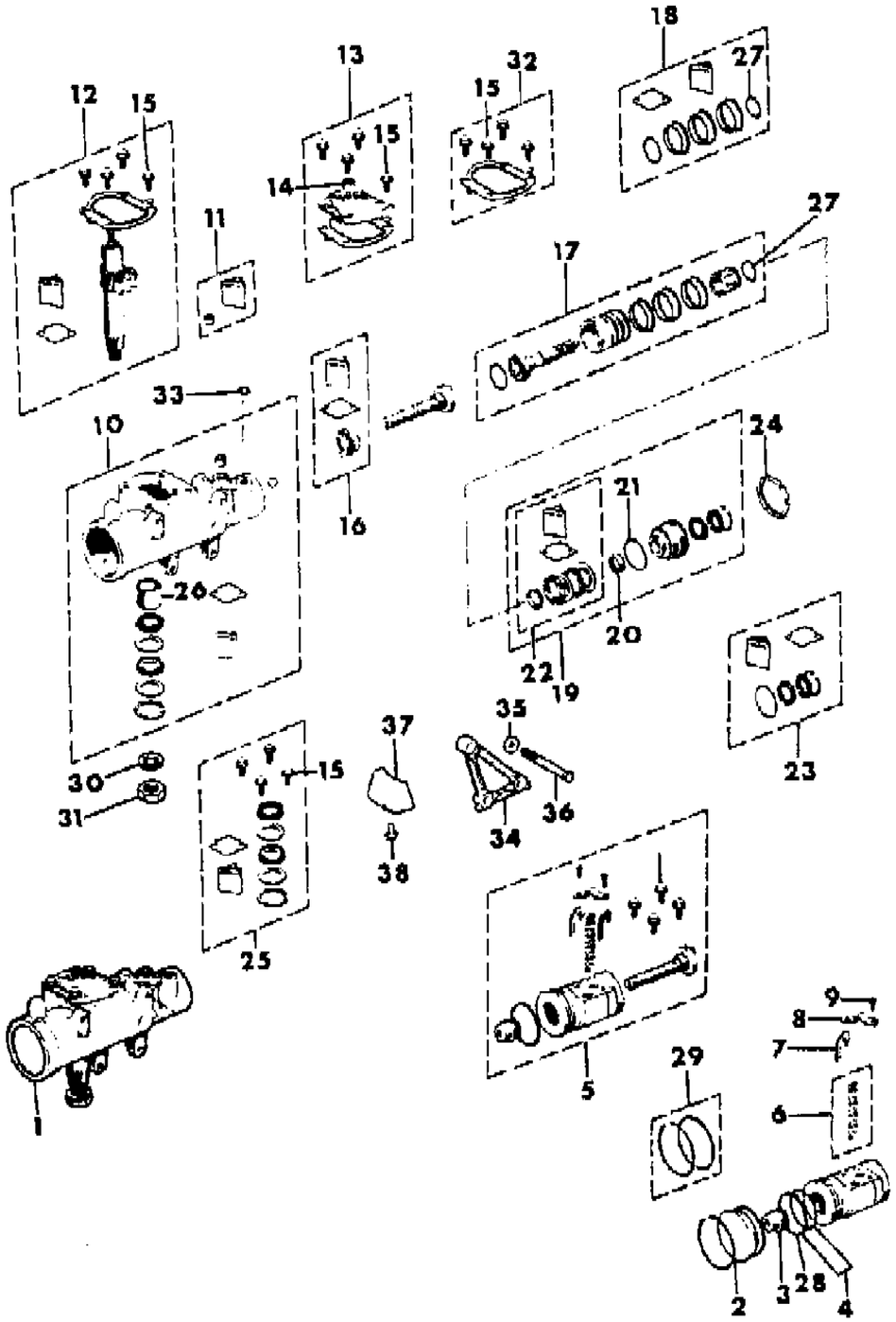

ITEM	PART NUMBER	QTY	BODY	MODEL	DESCRIPTION
1					GEAR, Steering
	5200 0088	1			With Constant Ratio Gear, Stamped EK
	8350 2253	1			With Constant Ratio Gear, Stamped ES
	5200 2737	1			With Variable Ratio Gear, Stamped 38 and Tagged 800 VR
2	8350 2251	1			PLUG
3	J812 7965	1			PLUG
4	J812 5039	1			SEAL PACKAGE
5					RACK PACKAGE
	J812 5471	1			With Constant Ratio Gear, Stamped EK or ES
	J812 5036	1			With Variable Ratio Gear, Stamped 38 and Tagged 800 VR
6	J320 4836	1			BALL PACKAGE
7					GUIDE
	J094 0707	1			With Constant Ratio Gear, Stamped EK
	J448 7887	1			With Constant Ratio Gear, Stamped ES
	J448 7887	1			With Variable Ratio Gear, Stamped 38 and Tagged 800 VR
8	J320 4812	1			CLAMP
9	J320 7057	2			SCREW
10	J813 2579	1			HOUSING PACKAGE ***
11	J813 2538	1			CHECK VALVE PACKAGE ***
12					SHAFT PACKAGE
	J812 2819	1			With Constant Ratio Gear, Stamped EK or ES
	J812 2958	1			With Variable Ratio Gear, Stamped 38 and Tagged 800 VR
13	J812 5033	1			COVER PACKAGE ***
14	J320 4818	1			NUT
15	J812 4191	4			BOLT
16	J812 7645	1			BEARING PACKAGE
17	8350 2261	1			VALVE PACKAGE
18	J320 4833	1			SEAL PACKAGE
19	J813 0155	1			ADJUSTER PACKAGE ***
20	J813 0142	1			BEARING
21	J812 6247	1			O-RING
22	J813 0152	1			BEARING KIT ***
23	J813 0157	1			SEAL PACKAGE
24	J812 8427	1			NUT
25	J813 4568	1			SEAL PACKAGE
26	J448 7154	1			BEARING
27	J812 6250	1			O-RING
28	J320 4814	1			RING, Piston
29	J812 5037	1			SEAL PACKAGE

MODEL CODES

16=Cherokee 2 Dr.(1981-83)
17=Cherokee 2 Dr.(1981-83)
73=Cherokee 2WD-2 Dr.(1984-86)
74=Cherokee 2WD-4 Dr.(1984-86)
18=Cherokee 4 Dr.(1981-83)
77=Cherokee 4WD-2 Dr.(1984-86)
78=Cherokee 4WD-4 Dr.(1984-86)
85=CJ-5 (1981-83)
86=CJ-6(1981)
87=CJ-7(1981-86)
88=CJ-8, Scrambler(1981-86)
64=Comanche 2WD-6 Ft. Box(1986)
66=Comanche 2WD-7 Ft. Box(1986)
63=Comanche 4WD-6 Ft. Box(1986)
65=Comanche 4WD-7 Ft. Box(1986)
15=Grand Wagoneer 4 Dr.(1984-86)
25=J-10 Truck 7 Ft. Box(1981-84)
26=J10 Truck 8 Ft. Box(1981-86)
27=J-20 Truck 8 Ft. Box(1981-86)
15=Wagoneer 4 Dr.(1981-83)
75=Wagoneer 4WD-4 Dr.(1984-86)

BODY
CJ=CJ-5, CJ-6, CJ-7, CJ-8, Scrambler(1981-86)
MJ=Comanche Pickup(1986)

STYLES
SJ=Wagoneer(1981-83), Grand Wagoneer(1984-86), Cherokee(1981-83), J-10, J-20(1981-86)
XJ=Wagoneer(1984-86), Cherokee(1984-86)

AR = Use as Required - = Non Illustrated Part P.A.R. = Paint as Required

« RETURN TO GROUP INDEX »

GEAR, STEERING WITH POWER STEERING XJ CHEROKEE, XJ WAGONEER, COMANCHE
Figure 19-4500

81J19 4500

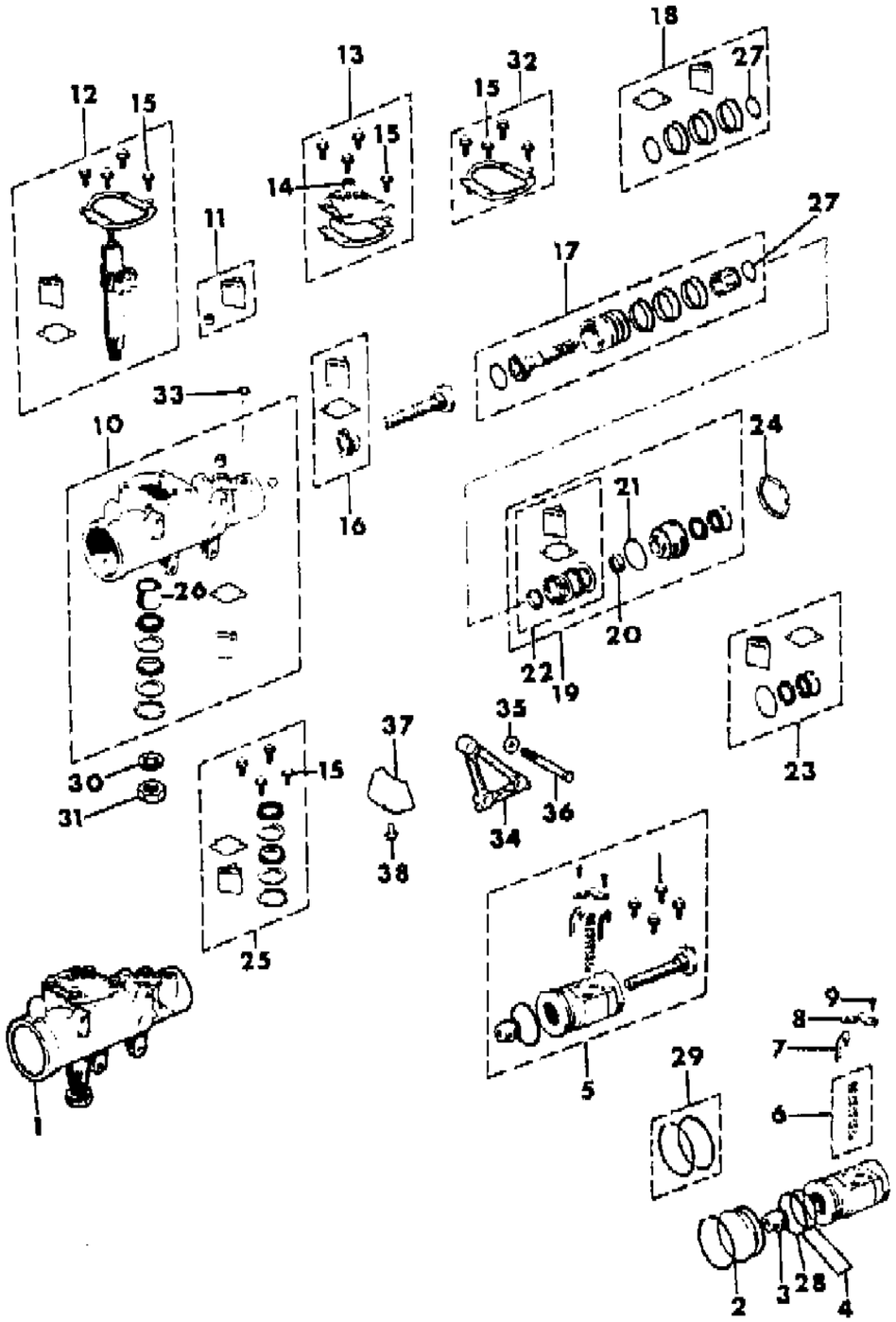

ITEM	PART NUMBER	QTY	BODY	MODEL	DESCRIPTION
30	S010 3336	1			WASHER
31	J320 0501	1			NUT
32	J812 5038	1			SEAL PACKAGE
33	J325 1183	1			SEAL
34	5200 0090	1			ADAPTER, Mounting
35	J400 3926	3			WASHER
36	J400 3972	3			BOLT
37	5200 0881	1			BLOCK
38	3420 1193	1			SCREW

MODEL CODES

16=Cherokee 2 Dr.(1981-83)
17=Cherokee 2 Dr.(1981-83)
73=Cherokee 2WD-2 Dr.(1984-86)
74=Cherokee 2WD-4 Dr.(1984-86)
18=Cherokee 4 Dr.(1981-83)
77=Cherokee 4WD-2 Dr.(1984-86)
78=Cherokee 4WD-4 Dr.(1984-86)
85=CJ-5 (1981-83)
86=CJ-6(1981)
87=CJ-7(1981-86)
88=CJ-8, Scrambler(1981-86)
64=Comanche 2WD-6 Ft. Box(1986)
66=Comanche 2WD-7 Ft. Box(1986)
63=Comanche 4WD-6 Ft. Box(1986)
65=Comanche 4WD-7 Ft. Box(1986)
15=Grand Wagoneer 4 Dr.(1984-86)
25=J-10 Truck 7 Ft. Box(1981-84)
26=J10 Truck 8 Ft. Box(1981-86)
27=J-20 Truck 8 Ft. Box(1981-86)
15=Wagoneer 4 Dr.(1981-83)
75=Wagoneer 4WD-4 Dr.(1984-86)

BODY
CJ=CJ-5, CJ-6, CJ-7, CJ-8, Scrambler(1981-86)
MJ=Comanche Pickup(1986)

STYLES
SJ=Wagoneer(1981-83), Grand Wagoneer(1984-86), Cherokee(1981-83), J-10, J-20(1981-86)
XJ=Wagoneer(1984-86), Cherokee(1984-86)

AR = Use as Required - = Non Illustrated Part P.A.R. = Paint as Required

« RETURN TO GROUP INDEX

GEAR, STEERING WITHOUT POWER STEERING SJ CHEROKEE, SJ WAGONEER, J10, J20
Figure 19-4600

81J19 4600

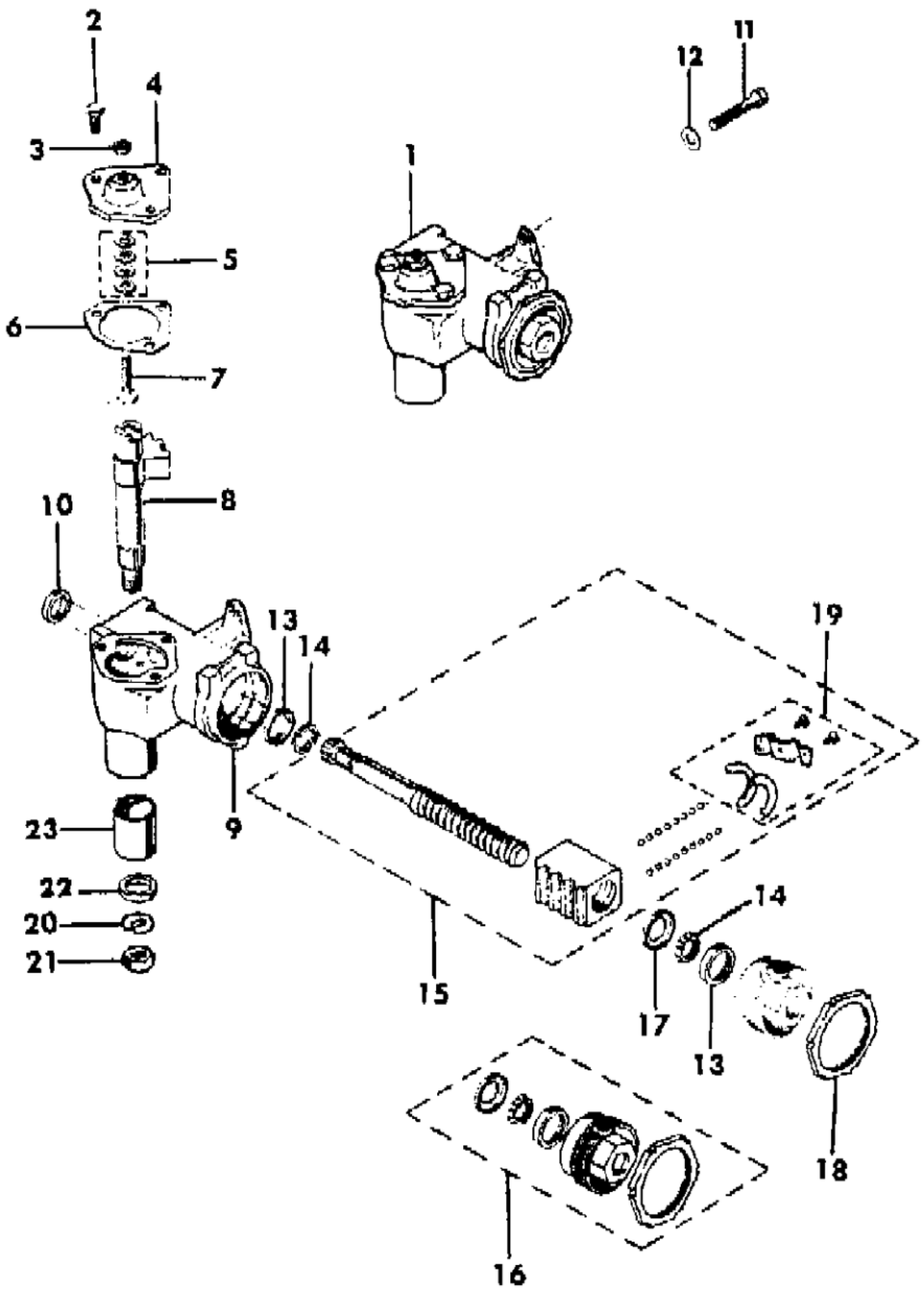

ITEM	PART NUMBER	QTY	BODY	MODEL	DESCRIPTION
1	J099 4509	1			GEAR, Steering
2	J099 2295	3			BOLT
3	J999 7938	1			NUT
4	J448 6846	1			COVER
5	J094 0521	1			SHIM PACKAGE ***
6	J094 0522	1			GASKET
7	J448 6135	1			BOLT
8	J812 0221	1			SHAFT
9	J813 0319	1			HOUSING
10	J448 6141	1			SEAL
11					BOLT
	J942 4069	2			7/16-14x1.25"
	J400 5612	1			7/16-14x4.50"
	J400 5613	1			7/16-14x5.50"
12					WASHER
	J400 4943	2			Conical
	J400 4809	2			Lock
13	J320 0492	2			CUP
14	J320 0491	2			BEARING
15	J099 8504	1			SHAFT PACKAGE
16	J320 6119	1			ADJUSTER PACKAGE ***
17	J320 0493	1			RETAINER
18	J094 0533	1			NUT
19	J320 5677	1			GUIDE PACKAGE ***
20	S010 3336	1			WASHER
21	J320 0501	1			NUT
22	J448 6140	1			SEAL
23	J320 0496	1			BUSHING

MODEL CODES

16=Cherokee 2 Dr.(1981-83)
17=Cherokee 2 Dr.(1981-83)
73=Cherokee 2WD-2 Dr.(1984-86)
74=Cherokee 2WD-4 Dr.(1984-86)
18=Cherokee 4 Dr.(1981-83)
77=Cherokee 4WD-2 Dr.(1984-86)
78=Cherokee 4WD-4 Dr.(1984-86)
85=CJ-5 (1981-83)
86=CJ-6(1981)
87=CJ-7(1981-86)
88=CJ-8, Scrambler(1981-86)
64=Comanche 2WD-6 Ft. Box(1986)
66=Comanche 2WD-7 Ft. Box(1986)
63=Comanche 4WD-6 Ft. Box(1986)
65=Comanche 4WD-7 Ft. Box(1986)
15=Grand Wagoneer 4 Dr.(1984-86)
25=J-10 Truck 7 Ft. Box(1981-84)
26=J10 Truck 8 Ft. Box(1981-86)
27=J-20 Truck 8 Ft. Box(1981-86)
15=Wagoneer 4 Dr.(1981-83)
75=Wagoneer 4WD-4 Dr.(1984-86)

BODY
CJ=CJ-5, CJ-6, CJ-7, CJ-8, Scrambler(1981-86)
MJ=Comanche Pickup(1986)

STYLES
SJ=Wagoneer(1981-83), Grand Wagoneer(1984-86), Cherokee(1981-83), J-10, J-20(1981-86)
XJ=Wagoneer(1984-86), Cherokee(1984-86)

AR = Use as Required - = Non Illustrated Part P.A.R. = Paint as Required

« RETURN TO GROUP INDEX

GEAR, STEERING WITH POWER STEERING SJ CHEROKEE, SJ WAGONEER, J10, J20
Figure 19-4700

B1J19 4700

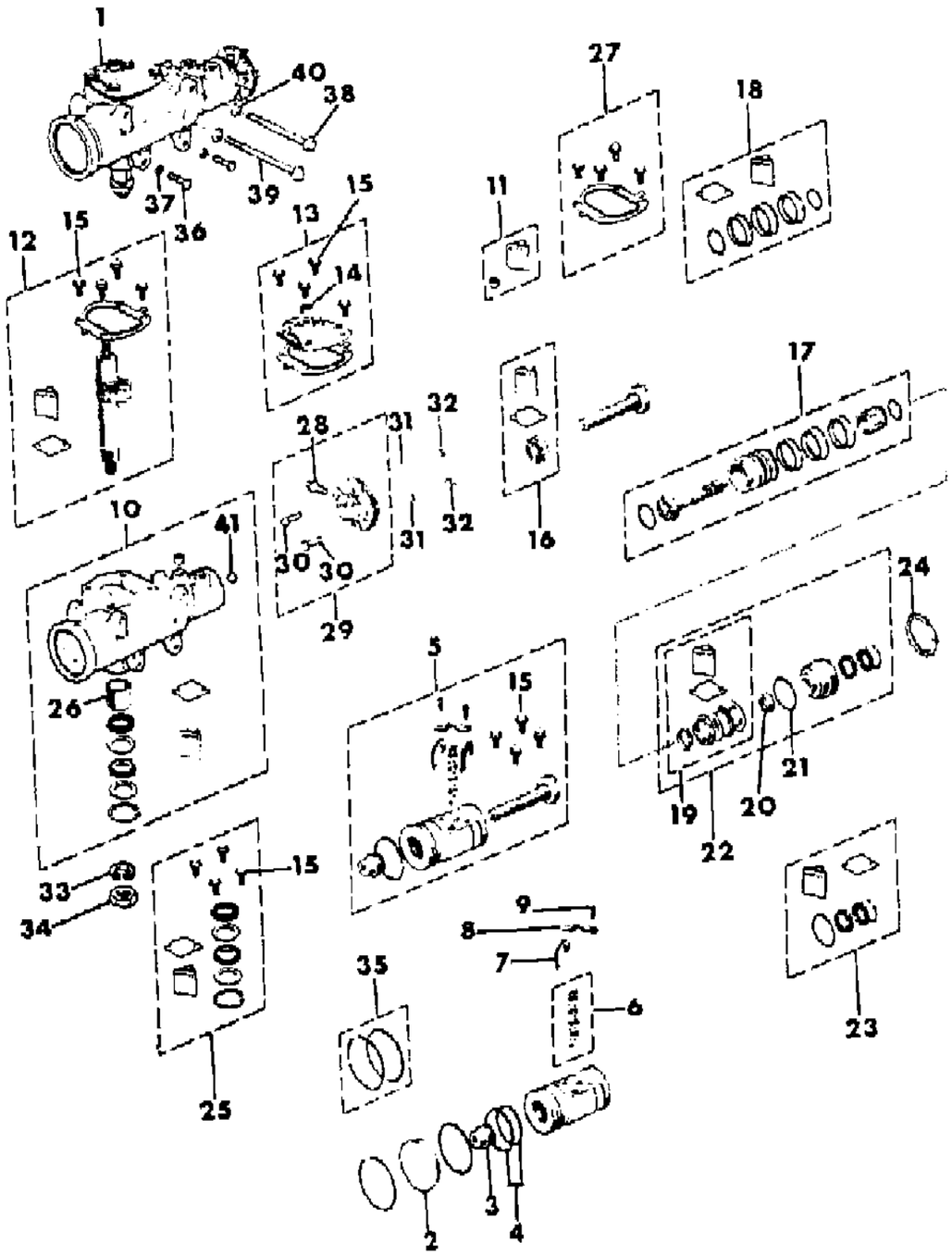

ITEM	PART NUMBER	QTY	BODY	MODEL	DESCRIPTION
1					GEAR, Steering
	J536 0093	1		15,16,1	1981-84
	J536 0093	1		25,26	1981-84
	5200 2085	1		15,26	1985-86
	J536 0094	1		27	1981-86
	J537 0043	1			1982-86: EXPORT, Right Hand Drive
2					PLUG
	J320 4820	1		15,16,1	
	J320 4820	1		25,26	
	J812 7058	1		27	
3	J812 7965	1			PLUG
4	J812 5039	1			SEAL PACKAGE
5					RACK PACKAGE
	J812 5036	1		15,16,1	
	J812 5036	1		25,26	
	J812 7056	1		27	
	J813 4558	1			EXPORT, Right Hand Drive
6	J320 4836	1			BALL PACKAGE
7	J448 7887	2			GUIDE
8	J320 4812	1			CLAMP
9	J320 7057	2			SCREW
10					HOUSING PACKAGE ***
	J813 2537	1		15,16,1	
	J813 2537	1		25,26	
	J813 2539	1		27	
	J813 4557	1			EXPORT, Right Hand Drive
11	J813 2538	1			CHECK VALVE PACKAGE ***
12					SHAFT PACKAGE
	J812 2958	1			
	J812 2819	1			EXPORT, Right Hand Drive
13	J812 5033	1			COVER PACKAGE ***
14	J320 4818	1			NUT
15	J812 4191	4			BOLT
16	J812 7645	1			BEARING PACKAGE
17					VALVE PACKAGE
	J813 0409	1		15,16,1	1981-84
	J813 0409	1		25,26	1981-84
	J813 0146	1		15,26	1985-86
	J813 0144	1		27	1981-86

MODEL CODES

16=Cherokee 2 Dr.(1981-83)	78=Cherokee 4WD-4 Dr.(1984-86)	64=Comanche 2WD-6 Ft. Box(1986)	25=J-10 Truck 7 Ft. Box(1981-84)
17=Cherokee 2 Dr.(1981-83)	85=CJ-5 (1981-83)	66=Comanche 2WD-7 Ft. Box(1986)	26=J10 Truck 8 Ft. Box(1981-86)
73=Cherokee 2WD-2 Dr.(1984-86)	86=CJ-6(1981)	63=Comanche 4WD-6 Ft. Box(1986)	27=J-20 Truck 8 Ft. Box(1981-86)
74=Cherokee 2WD-4 Dr.(1984-86)	87=CJ-7(1981-86)	65=Comanche 4WD-7 Ft. Box(1986)	15=Wagoneer 4 Dr.(1981-83)
18=Cherokee 4 Dr.(1981-83)	88=CJ-8, Scrambler(1981-86)	15=Grand Wagoneer 4 Dr.(1984-86)	75=Wagoneer 4WD-4 Dr.(1984-86)
77=Cherokee 4WD-2 Dr.(1984-86)			

BODY
CJ=CJ-5, CJ-6, CJ-7, CJ-8, Scrambler(1981-86)
MJ=Comanche Pickup(1986)

STYLES
SJ=Wagoneer(1981-83), Grand Wagoneer(1984-86), Cherokee(1981-83), J-10, J-20(1981-86)
XJ=Wagoneer(1984-86), Cherokee(1984-86)

AR = Use as Required - = Non Illustrated Part P.A.R. = Paint as Required

« RETURN TO GROUP INDEX »

GEAR, STEERING WITH POWER STEERING SJ CHEROKEE, SJ WAGONEER, J10, J20
Figure 19-4700

81J19 4700

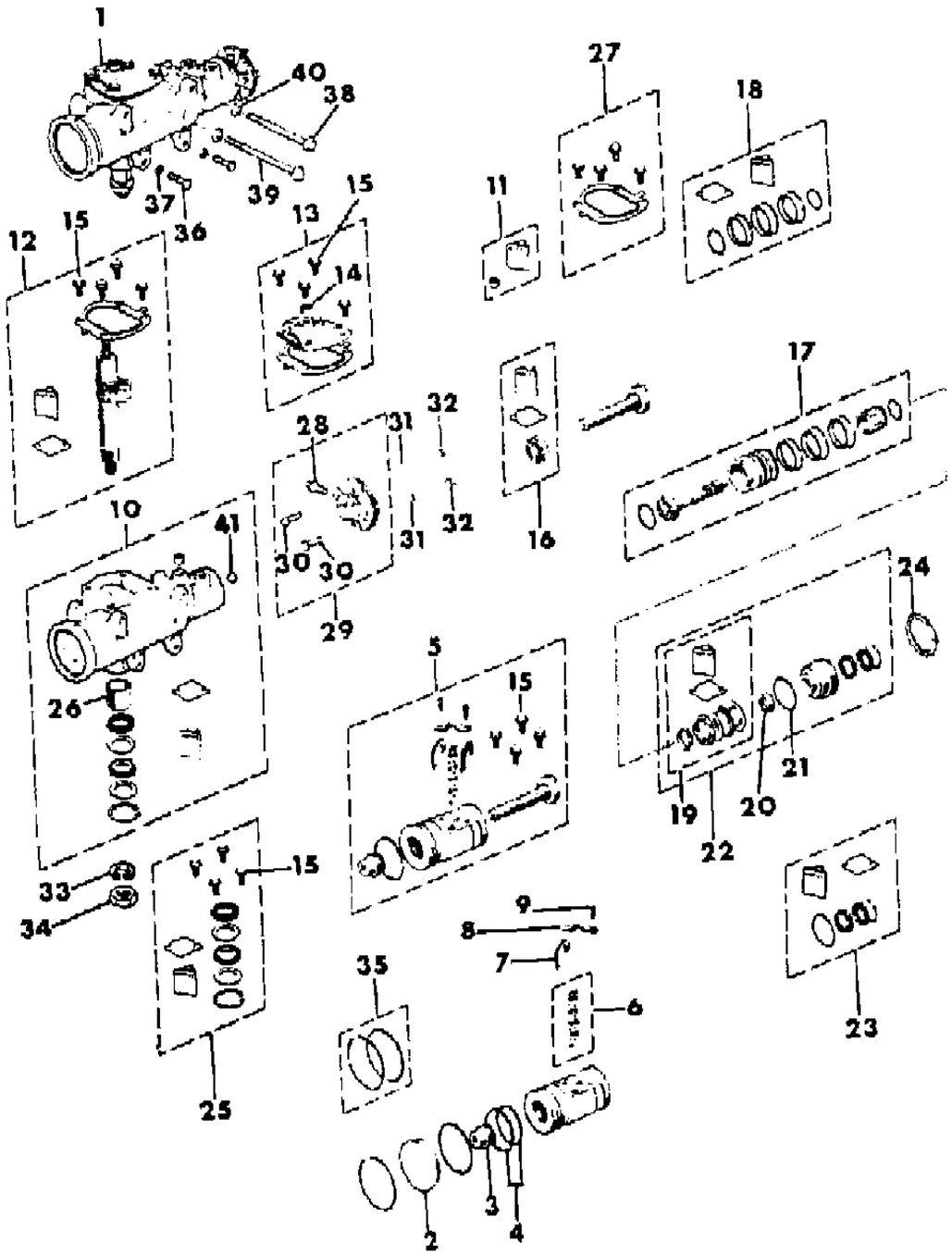

ITEM	PART NUMBER	QTY	BODY	MODEL	DESCRIPTION
18					RING AND SEAL PACKAGE ***
	J320 4833	1			
	J813 4581	1			EXPORT, Right Hnad Drive
19	J813 0152	1			BEARING PACKAGE
20	J813 0142	1			BEARING
21	J812 6247	1			O-RING
22	J813 0155	1			ADJUSTER PACKAGE ***
23	J813 0157	1			SEAL PACKAGE
24	J812 8427	1			NUT
25					SEAL PACKAGE
	J320 4830	1			
	J813 4568	1			EXPORT, Right Hand Drive
26	J448 7154	1			BEARING
27	J812 5038	1			GASKET PACKAGE ***
28	J400 3934	1			BOLT
29					FLANGE PACKAGE ***
	J812 7966	1			
	J813 4564	1			EXPORT, Right Hand Drive
30					BOLT
	J448 6976	1			5/16-24
	J320 8200	1			3/8-24
31					WASHER
	J012 0214	1			5/16"
	J012 0382	1			3/8"
32					NUT
	J045 1399	1			5/16-24
	J400 1800	1			3/8-24
33	S010 3336	1			WASHER
34	J320 0501	1			NUT
35	J094 0703	1			RING, Retaining
36	J942 4069	2			BOLT
37	J400 4809	2			WASHER
38	J400 5612	1			BOLT
39	J400 5613	1			BOLT
40	J400 4943	2			WASHER
41	J325 1183	2			O-RING

MODEL CODES

16=Cherokee 2 Dr.(1981-83)
17=Cherokee 2 Dr.(1981-83)
73=Cherokee 2WD-2 Dr.(1984-86)
74=Cherokee 2WD-4 Dr.(1984-86)
18=Cherokee 4 Dr.(1981-83)
77=Cherokee 4WD-2 Dr.(1984-86)
78=Cherokee 4WD-4 Dr.(1984-86)
85=CJ-5 (1981-83)
86=CJ-6(1981)
87=CJ-7(1981-86)
88=CJ-8, Scrambler(1981-86)
64=Comanche 2WD-6 Ft. Box(1986)
66=Comanche 2WD-7 Ft. Box(1986)
63=Comanche 4WD-6 Ft. Box(1986)
65=Comanche 4WD-7 Ft. Box(1986)
15=Grand Wagoneer 4 Dr.(1984-86)
25=J-10 Truck 7 Ft. Box(1981-84)
26=J10 Truck 8 Ft. Box(1981-86)
27=J-20 Truck 8 Ft. Box(1981-86)
15=Wagoneer 4 Dr.(1981-83)
75=Wagoneer 4WD-4 Dr.(1984-86)

BODY
CJ=CJ-5, CJ-6, CJ-7, CJ-8, Scrambler(1981-86)
MJ=Comanche Pickup(1986)

STYLES
SJ=Wagoneer(1981-83), Grand Wagoneer(1984-86), Cherokee(1981-83), J-10, J-20(1981-86)
XJ=Wagoneer(1984-86), Cherokee(1984-86)

AR = Use as Required - = Non Illustrated Part P.A.R. = Paint as Required

« RETURN TO GROUP INDEX

LINKAGE, STEERING CJ-5,6,7,8, SCRAMBLER
Figure 19-4800

81J19 4800

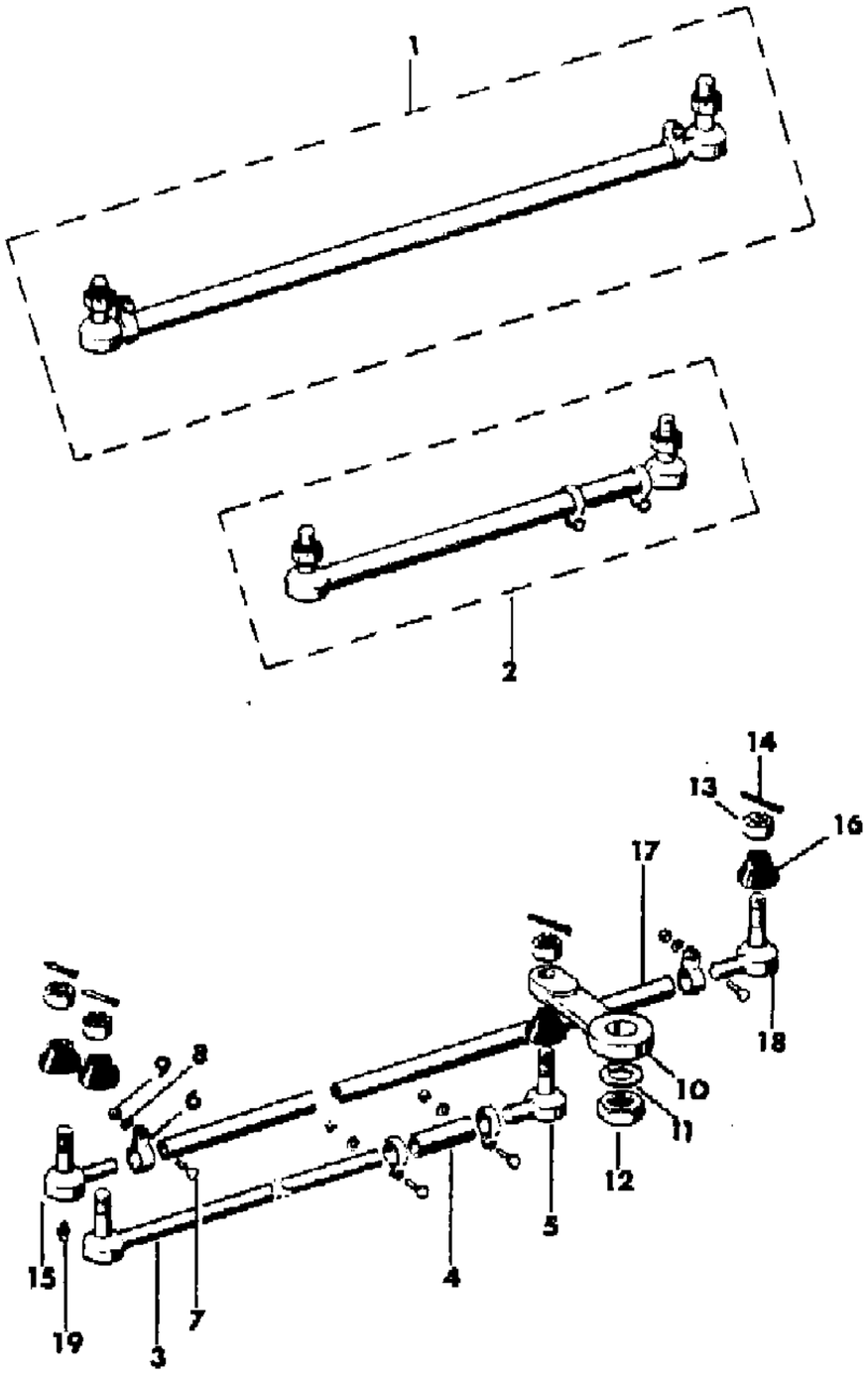

ITEM	PART NUMBER	QTY	BODY	MODEL	DESCRIPTION
1					ROD ASSEMBLY, Knuckle To Knuckle
	J535 0586	1			1981
	J535 0586	1		85	1982-83
	J813 4295	1		87,88	1982-86
	J535 0569	1			1981-86: EXPORT, Right Hand Drive
2					ROD ASSEMBLY, Pittman To Knuckle
	J535 6105	1		85	1981-83
	J535 5688	1			1981-86: EXPORT, Right Hand Drive
3					END, Tie Rod
	J099 1744	1			1981
	J099 1744	1		85	1982-83
	J813 4350	1		87,88	1982-86
	J535 0570	1			1981-86: EXPORT, Right Hand Drive
4	J320 0671	1			TUBE, Tie Rod
5	J092 1317	1			END, Tie Rod
6	JA00 0837	4			CLAMP
7	J064 5218	4			BOLT
8	J999 8729	4			WASHER
9	J012 0368	4			NUT
10					ARM, Pittman
					With Power Steering
	J535 6104	1			
	J535 9571	1			EXPORT, Right Hand Drive
					Without Power Steering
	J535 6106	1			
	J535 5687	1			EXPORT, Right Hand Drive
11	S010 3336	1			WASHER
12	J320 0501	1			NUT
13	S012 5250	4			NUT, Castle
14	J012 1224	4			PIN, Cotter
15					END, Tie Rod
	J092 0535	1			
	J092 1317	1			EXPORT, Right Hand Drive
16	J064 5134	4			COVER, Tie Rod
17					TUBE, Tie Rod
	J535 0589	1			1981
	J535 0589	1		85	1982-83
	J813 4290	1		87,88	1982-86
	J099 4308	1			1981-86: EXPORT, Right Hand Drive

MODEL CODES

16=Cherokee 2 Dr.(1981-83)
17=Cherokee 2 Dr.(1981-83)
73=Cherokee 2WD-2 Dr.(1984-86)
74=Cherokee 2WD-4 Dr.(1984-86)
18=Cherokee 4 Dr.(1981-83)
77=Cherokee 4WD-2 Dr.(1984-86)
78=Cherokee 4WD-4 Dr.(1984-86)
85=CJ-5 (1981-83)
86=CJ-6(1981)
87=CJ-7(1981-86)
88=CJ-8, Scrambler(1981-86)
64=Comanche 2WD-6 Ft. Box(1986)
66=Comanche 2WD-7 Ft. Box(1986)
63=Comanche 4WD-6 Ft. Box(1986)
65=Comanche 4WD-7 Ft. Box(1986)
15=Grand Wagoneer 4 Dr.(1984-86)
25=J-10 Truck 7 Ft. Box(1981-84)
26=J10 Truck 8 Ft. Box(1981-86)
27=J-20 Truck 8 Ft. Box(1981-86)
15=Wagoneer 4 Dr.(1981-83)
75=Wagoneer 4WD-4 Dr.(1984-86)

BODY
CJ=CJ-5, CJ-6, CJ-7, CJ-8, Scrambler(1981-86)
MJ=Comanche Pickup(1986)

STYLES
SJ=Wagoneer(1981-83), Grand Wagoneer(1984-86), Cherokee(1981-83), J-10, J-20(1981-86)
XJ=Wagoneer(1984-86), Cherokee(1984-86)

AR = Use as Required - = Non Illustrated Part P.A.R. = Paint as Required

« RETURN TO GROUP INDEX »

LINKAGE, STEERING CJ-5,6,7,8, SCRAMBLER
Figure 19-4800

81J19 4800

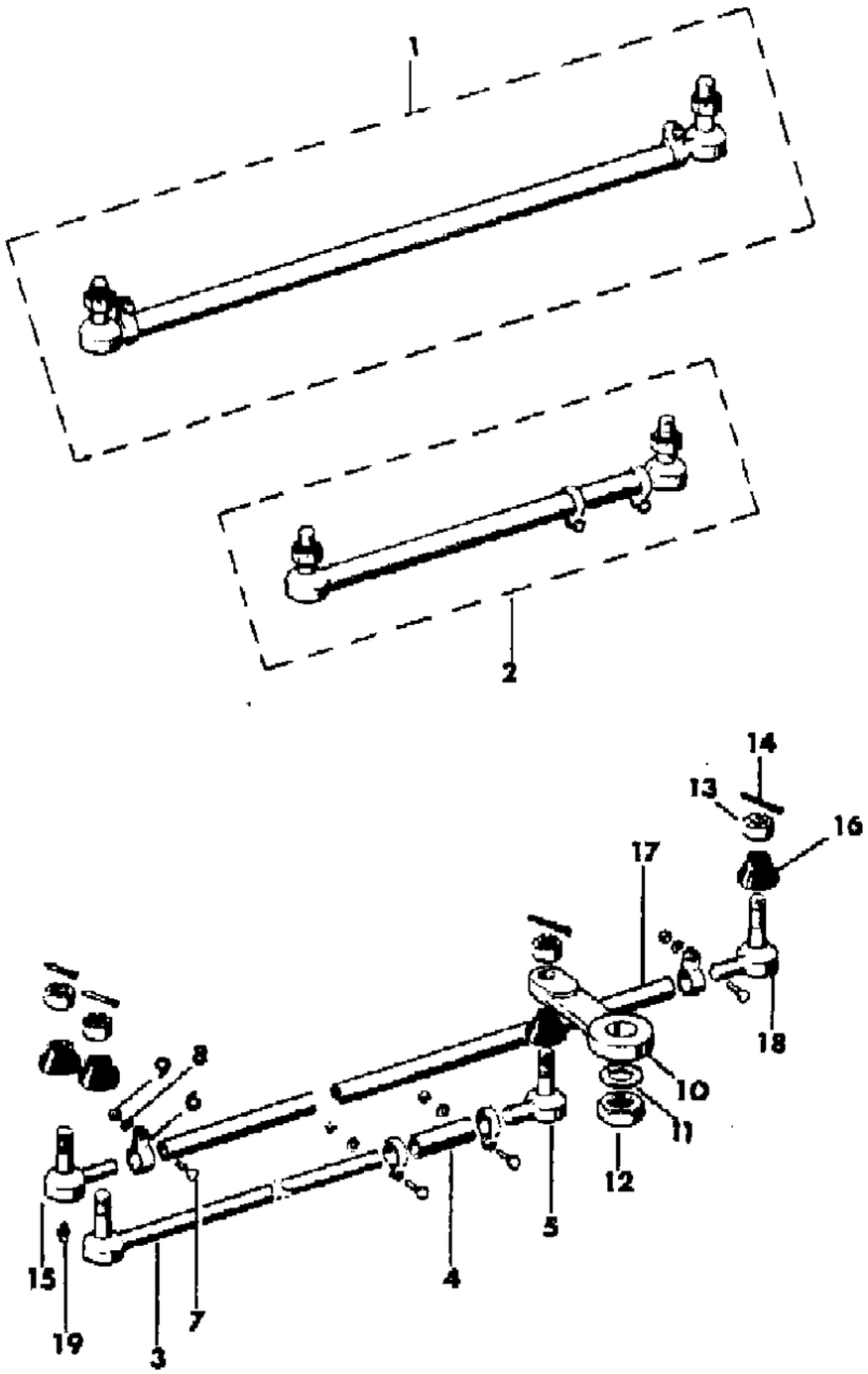

ITEM	PART NUMBER	QTY	BODY	MODEL	DESCRIPTION
18					END, Tie Rod
	J092 1317	1			
	J091 8257	1			EXPORT, Right Hand Drive
19	J027 1287	4			FITTING, Grease

MODEL CODES

16=Cherokee 2 Dr.(1981-83)	78=Cherokee 4WD-4 Dr.(1984-86)	64=Comanche 2WD-6 Ft. Box(1986)	25=J-10 Truck 7 Ft. Box(1981-84)
17=Cherokee 2 Dr.(1981-83)	85=CJ-5 (1981-83)	66=Comanche 2WD-7 Ft. Box(1986)	26=J10 Truck 8 Ft. Box(1981-86)
73=Cherokee 2WD-2 Dr.(1984-86)	86=CJ-6(1981)	63=Comanche 4WD-6 Ft. Box(1986)	27=J-20 Truck 8 Ft. Box(1981-86)
74=Cherokee 2WD-4 Dr.(1984-86)	87=CJ-7(1981-86)	65=Comanche 4WD-7 Ft. Box(1986)	15=Wagoneer 4 Dr.(1981-83)
18=Cherokee 4 Dr.(1981-83)	88=CJ-8, Scrambler(1981-86)	15=Grand Wagoneer 4 Dr.(1984-86)	75=Wagoneer 4WD-4 Dr.(1984-86)
77=Cherokee 4WD-2 Dr.(1984-86)			

BODY
CJ=CJ-5, CJ-6, CJ-7, CJ-8, Scrambler(1981-86)
MJ=Comanche Pickup(1986)

STYLES
SJ=Wagoneer(1981-83), Grand Wagoneer(1984-86), Cherokee(1981-83), J-10, J-20(1981-86)
XJ=Wagoneer(1984-86), Cherokee(1984-86)

AR = Use as Required - = Non Illustrated Part P.A.R. = Paint as Required

« RETURN TO GROUP INDEX

DAMPER, STEERING ORIGINAL EQUIPMENT CJ-5,6,7,8, SCRAMBLER
Figure 19-4900

81J19 4900

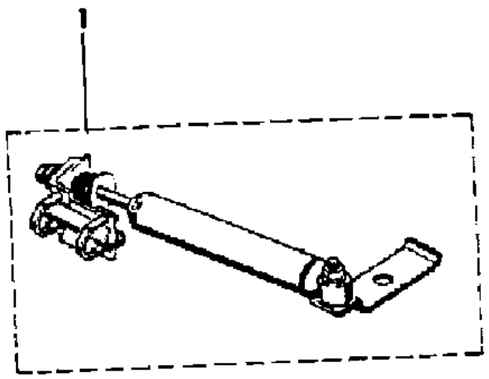

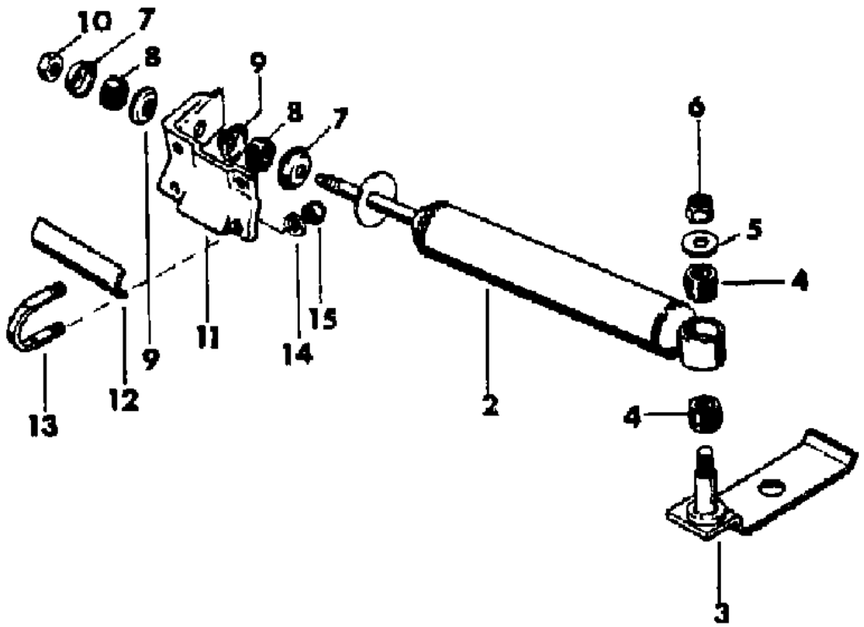

ITEM	PART NUMBER	QTY	BODY	MODEL	DESCRIPTION
1	J535 1717	1			DAMPER PACKAGE, Steering ***
2	J094 0105	1			DAMPER
3	J535 1714	1			BRACKET
4	J063 7936	2			BUSHING
5	J012 0389	1			WASHER
6	J941 3215	1			NUT
7	J080 2141	2			WASHER
8	J080 2143	2			BUSHING
9	J092 8174	2			WASHER
10	J012 0369	1			NUT
11	J099 2045	1			BRACKET
12	J094 0122	1			REINFORCEMENT
13	J094 0121	2			U-BOLT ***
14	J066 9842	2			WASHER
15	J941 6531	2			NUT

MODEL CODES
16=Cherokee 2 Dr.(1981-83)
17=Cherokee 2 Dr.(1981-83)
73=Cherokee 2WD-2 Dr.(1984-86)
74=Cherokee 2WD-4 Dr.(1984-86)
18=Cherokee 4 Dr.(1981-83)
77=Cherokee 4WD-2 Dr.(1984-86)
78=Cherokee 4WD-4 Dr.(1984-86)
85=CJ-5 (1981-83)
86=CJ-6(1981)
87=CJ-7(1981-86)
88=CJ-8, Scrambler(1981-86)
64=Comanche 2WD-6 Ft. Box(1986)
66=Comanche 2WD-7 Ft. Box(1986)
63=Comanche 4WD-6 Ft. Box(1986)
65=Comanche 4WD-7 Ft. Box(1986)
15=Grand Wagoneer 4 Dr.(1984-86)
25=J-10 Truck 7 Ft. Box(1981-84)
26=J10 Truck 8 Ft. Box(1981-86)
27=J-20 Truck 8 Ft. Box(1981-86)
15=Wagoneer 4 Dr.(1981-83)
75=Wagoneer 4WD-4 Dr.(1984-86)

BODY
CJ=CJ-5, CJ-6, CJ-7, CJ-8, Scrambler(1981-86)
MJ=Comanche Pickup(1986)

STYLES
SJ=Wagoneer(1981-83), Grand Wagoneer(1984-86), Cherokee(1981-83), J-10, J-20(1981-86)
XJ=Wagoneer(1984-86), Cherokee(1984-86)

AR = Use as Required - = Non Illustrated Part P.A.R. = Paint as Required

« RETURN TO GROUP INDEX

DAMPER, STEERING SPECIAL EQUIPMENT CJ-5,6,7,8, SCRAMBLER
Figure 19-5000

81J19 5000

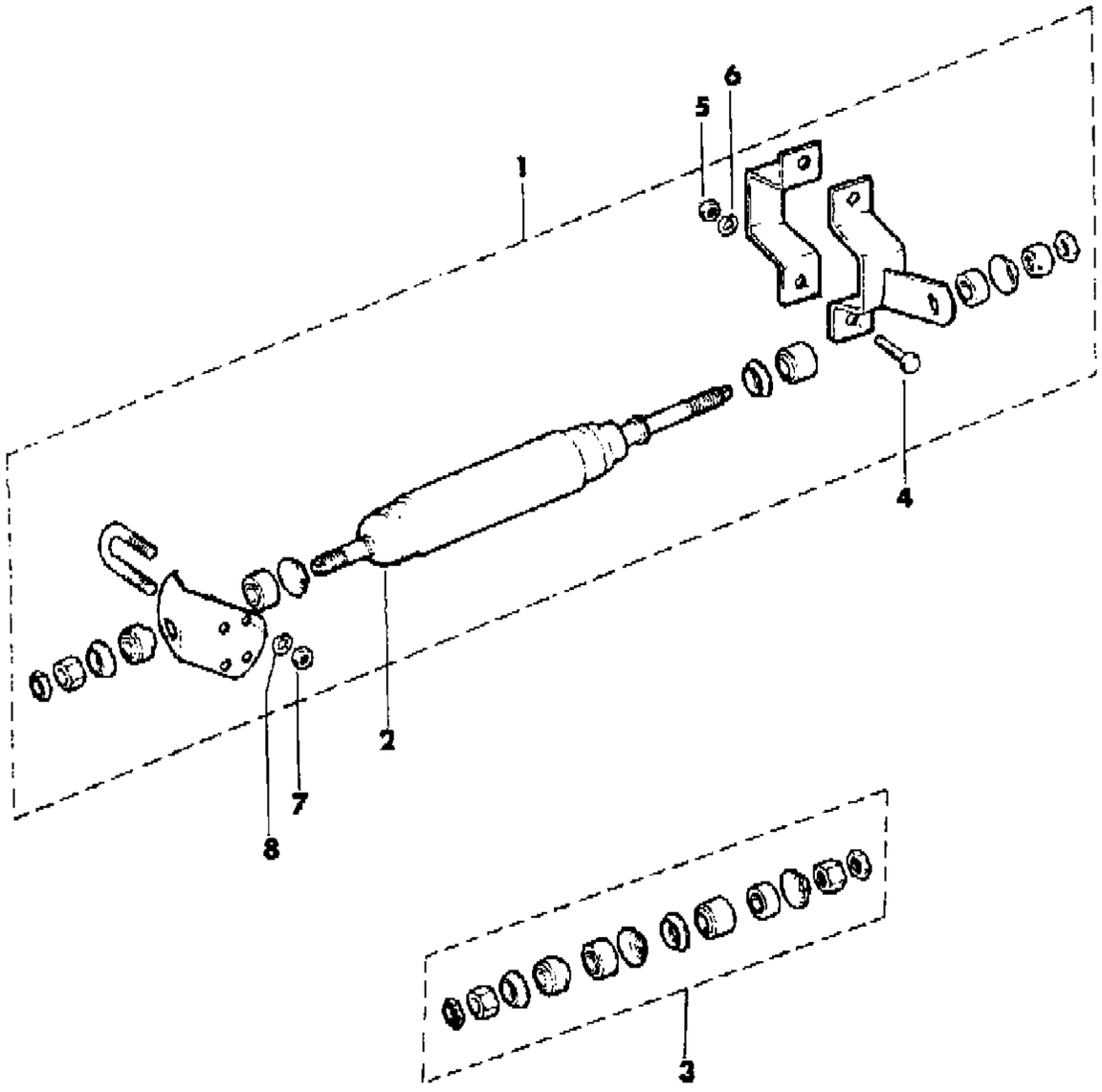

ITEM	PART NUMBER	QTY	BODY	MODEL	DESCRIPTION
1	J212 7001	1			DAMPER PACKAGE, Steering ***
2	J813 1078	1			DAMPER
3	J813 1079	1			BUSHING PACKAGE
4	J999 8142	1			BOLT
5	J012 0377	1			NUT
6	J012 0382	1			WASHER
7	J012 0376	1			NUT
8	J012 0214	1			WASHER

MODEL CODES

16=Cherokee 2 Dr.(1981-83)
17=Cherokee 2 Dr.(1981-83)
73=Cherokee 2WD-2 Dr.(1984-86)
74=Cherokee 2WD-4 Dr.(1984-86)
18=Cherokee 4 Dr.(1981-83)
77=Cherokee 4WD-2 Dr.(1984-86)
78=Cherokee 4WD-4 Dr.(1984-86)
85=CJ-5 (1981-83)
86=CJ-6(1981)
87=CJ-7(1981-86)
88=CJ-8, Scrambler(1981-86)
64=Comanche 2WD-6 Ft. Box(1986)
66=Comanche 2WD-7 Ft. Box(1986)
63=Comanche 4WD-6 Ft. Box(1986)
65=Comanche 4WD-7 Ft. Box(1986)
15=Grand Wagoneer 4 Dr.(1984-86)
25=J-10 Truck 7 Ft. Box(1981-84)
26=J10 Truck 8 Ft. Box(1981-86)
27=J-20 Truck 8 Ft. Box(1981-86)
15=Wagoneer 4 Dr.(1981-83)
75=Wagoneer 4WD-4 Dr.(1984-86)

BODY
CJ=CJ-5, CJ-6, CJ-7, CJ-8, Scrambler(1981-86)
MJ=Comanche Pickup(1986)

STYLES
SJ=Wagoneer(1981-83), Grand Wagoneer(1984-86), Cherokee(1981-83), J-10, J-20(1981-86)
XJ=Wagoneer(1984-86), Cherokee(1984-86)

AR = Use as Required - = Non Illustrated Part P.A.R. = Paint as Required

« RETURN TO GROUP INDEX

LINKAGE AND DAMPER, STEERING XJ CHEROKEE, XJ WAGONEER, COMANCHE
Figure 19-5100

81J19 5100

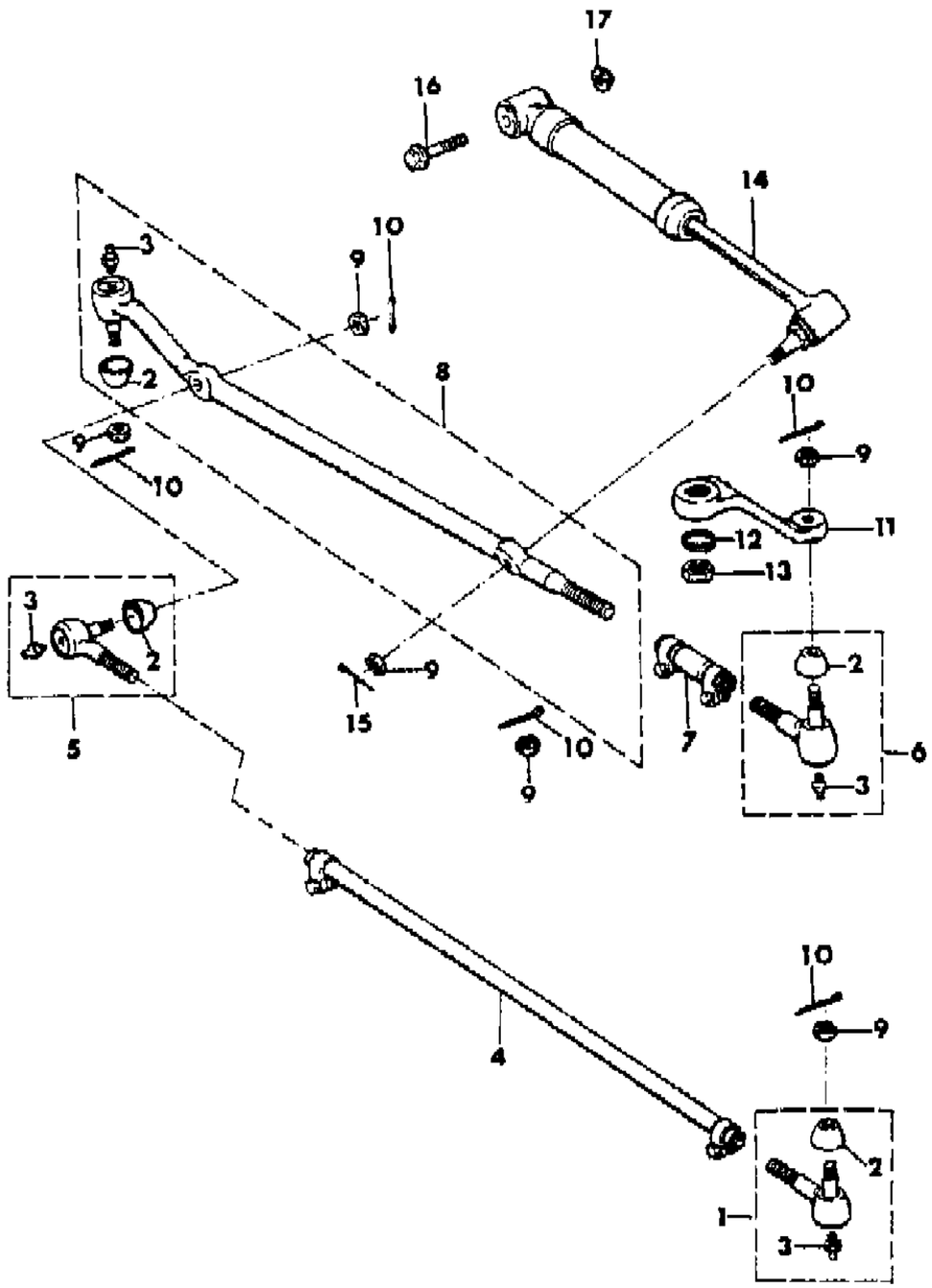

ITEM	PART NUMBER	QTY	BODY	MODEL	DESCRIPTION
1	5200 0598	1			END, Tie Rod
2	5200 0988	4			COVER, Tie Rod End
3	J027 1287	4			FITTING
4	5200 0596	1			TUBE
5	5200 0599	1			END, Tie Rod
6	5200 0608	1			END, Tie Rod
7	5200 0604	1			TUBE
8	5200 0601	1			END, Tie Rod
9	J027 4428	5			NUT
10	J010 3375	4			PIN, Cotter
11					ARM, Pittman
	5200 0615	1			With Power Steering
	5200 0616	1			Without Power Steering
12	S010 3336	1			WASHER
13	J320 0501	1			NUT
14	J323 6097	1			SHOCK ABSORBER ***
15	J012 1224	1			PIN, Cotter
16	1150 5098	1			BOLT
17	1150 2813	1			NUT

MODEL CODES

16=Cherokee 2 Dr.(1981-83)
17=Cherokee 2 Dr.(1981-83)
73=Cherokee 2WD-2 Dr.(1984-86)
74=Cherokee 2WD-4 Dr.(1984-86)
18=Cherokee 4 Dr.(1981-83)
77=Cherokee 4WD-2 Dr.(1984-86)
78=Cherokee 4WD-4 Dr.(1984-86)
85=CJ-5 (1981-83)
86=CJ-6(1981)
87=CJ-7(1981-86)
88=CJ-8, Scrambler(1981-86)
64=Comanche 2WD-6 Ft. Box(1986)
66=Comanche 2WD-7 Ft. Box(1986)
63=Comanche 4WD-6 Ft. Box(1986)
65=Comanche 4WD-7 Ft. Box(1986)
15=Grand Wagoneer 4 Dr.(1984-86)
25=J-10 Truck 7 Ft. Box(1981-84)
26=J10 Truck 8 Ft. Box(1981-86)
27=J-20 Truck 8 Ft. Box(1981-86)
15=Wagoneer 4 Dr.(1981-83)
75=Wagoneer 4WD-4 Dr.(1984-86)

BODY
CJ=CJ-5, CJ-6, CJ-7, CJ-8, Scrambler(1981-86)
MJ=Comanche Pickup(1986)

STYLES
SJ=Wagoneer(1981-83), Grand Wagoneer(1984-86), Cherokee(1981-83), J-10, J-20(1981-86)
XJ=Wagoneer(1984-86), Cherokee(1984-86)

AR = Use as Required - = Non Illustrated Part P.A.R. = Paint as Required

« RETURN TO GROUP INDEX

LINKAGE AND DAMPER STEERING SJ CHEROKEE, SJ WAGONEER, J10, J20
Figure 19-5200

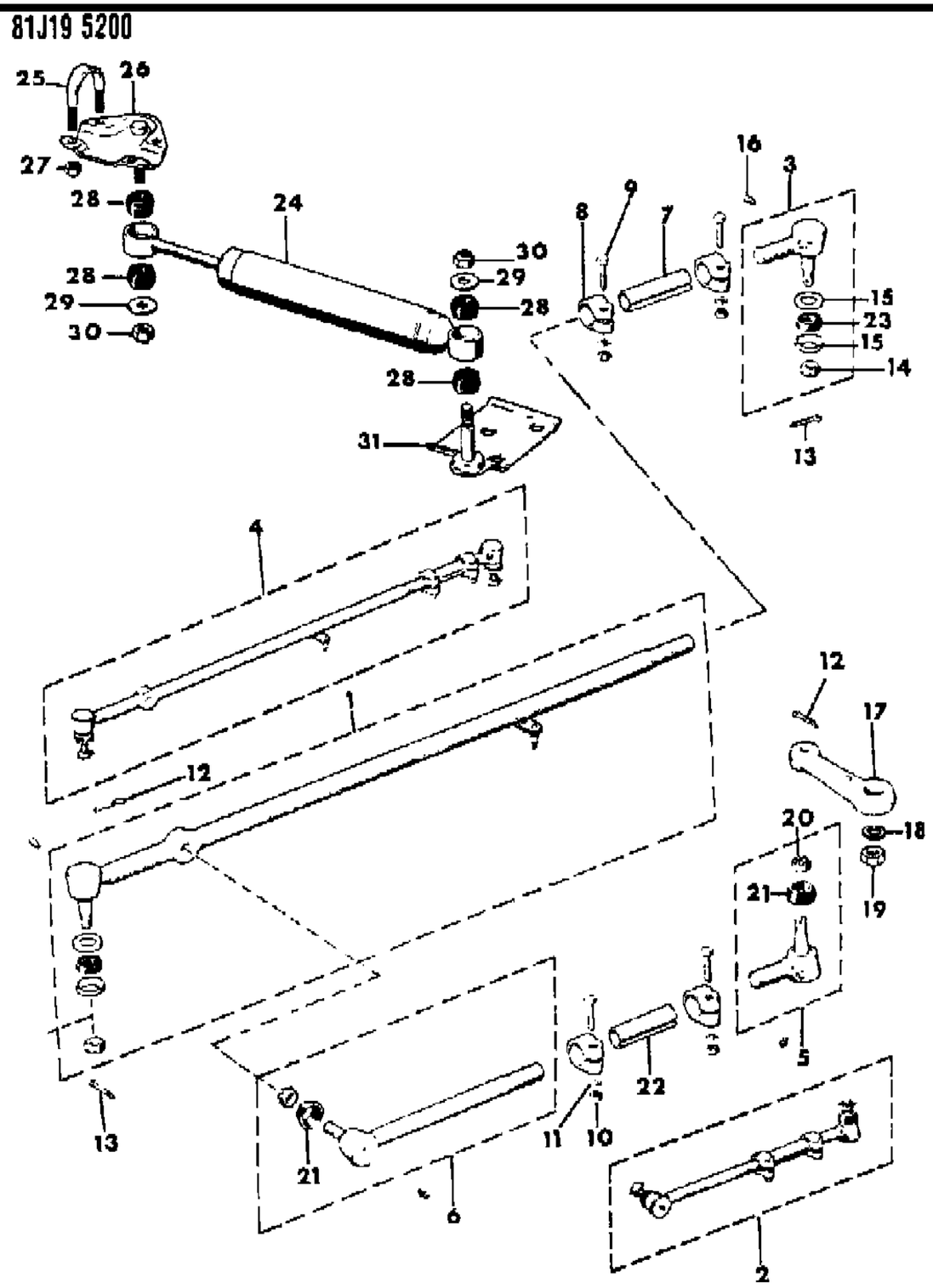

ITEM	PART NUMBER	QTY	BODY	MODEL	DESCRIPTION
1					END, Tie Rod
	J812 4816	1		15,16,1	
	J812 4823	1		17,25,2	
					EXPORT, Right Hand Drive
	J812 4825	1		15,16,1	
	J812 4827	1		17,25,2	
2					ROD ASSEMBLY, Pittman to Knuckle
	J535 2163	1		15,16,1	
	J535 2421	1		17,25,2	
3					END, Tie Rod
	J812 4817	1			
	J812 4828	1			EXPORT, Right Hand Drive
4					ROD ASSEMBLY, Knuckle to Knuckle
	J535 2665	1		15,16,1	
	J535 2680	1		17,25,2	
					EXPORT, Right Hand Drive
	J812 4824	1		15,16,1	
	J812 4826	1		17,25,2	
5	J812 3319	1			END, Tie Rod
6					END, Tie Rod
	J812 3315	1		15,16,1	
	J812 3316	1		17,25,2	
7	J812 4819	1			TUBE
8	J080 6746	4			CLAMP
9	S018 1404	4			BOLT
10	S027 1505	4			NUT
11	J012 0383	4			WASHER
12	J013 7190	2			PIN, Cotter
13	S010 8635	2			PIN, Cotter
14	J812 4818	2			NUT, Castle
15	J812 4820	2			WASHER
16	J027 1287	3			FITTING, Grease
17					ARM, Pittman
					With Power Steering
	J535 2278	1			
	J536 1744	1			EXPORT, Right Hand Drive
	J535 2162	1			Without Power Steering
18	S010 3336	1			WASHER
19	J320 0501	1			NUT

MODEL CODES

16=Cherokee 2 Dr.(1981-83)	78=Cherokee 4WD-4 Dr.(1984-86)	64=Comanche 2WD-6 Ft. Box(1986)	25=J-10 Truck 7 Ft. Box(1981-84)
17=Cherokee 2 Dr.(1981-83)	85=CJ-5 (1981-83)	66=Comanche 2WD-7 Ft. Box(1986)	26=J10 Truck 8 Ft. Box(1981-86)
73=Cherokee 2WD-2 Dr.(1984-86)	86=CJ-6(1981)	63=Comanche 4WD-6 Ft. Box(1986)	27=J-20 Truck 8 Ft. Box(1981-86)
74=Cherokee 2WD-4 Dr.(1984-86)	87=CJ-7(1981-86)	65=Comanche 4WD-7 Ft. Box(1986)	15=Wagoneer 4 Dr.(1981-83)
18=Cherokee 4 Dr.(1981-83)	88=CJ-8, Scrambler(1981-86)	15=Grand Wagoneer 4 Dr.(1984-86)	75=Wagoneer 4WD-4 Dr.(1984-86)
77=Cherokee 4WD-2 Dr.(1984-86)			

BODY
CJ=CJ-5, CJ-6, CJ-7, CJ-8, Scrambler(1981-86)
MJ=Comanche Pickup(1986)

STYLES
SJ=Wagoneer(1981-83), Grand Wagoneer(1984-86), Cherokee(1981-83), J-10, J-20(1981-86)
XJ=Wagoneer(1984-86), Cherokee(1984-86)

AR = Use as Required - = Non Illustrated Part P.A.R. = Paint as Required

« RETURN TO GROUP INDEX »

LINKAGE AND DAMPER STEERING SJ CHEROKEE, SJ WAGONEER, J10, J20
Figure 19-5200

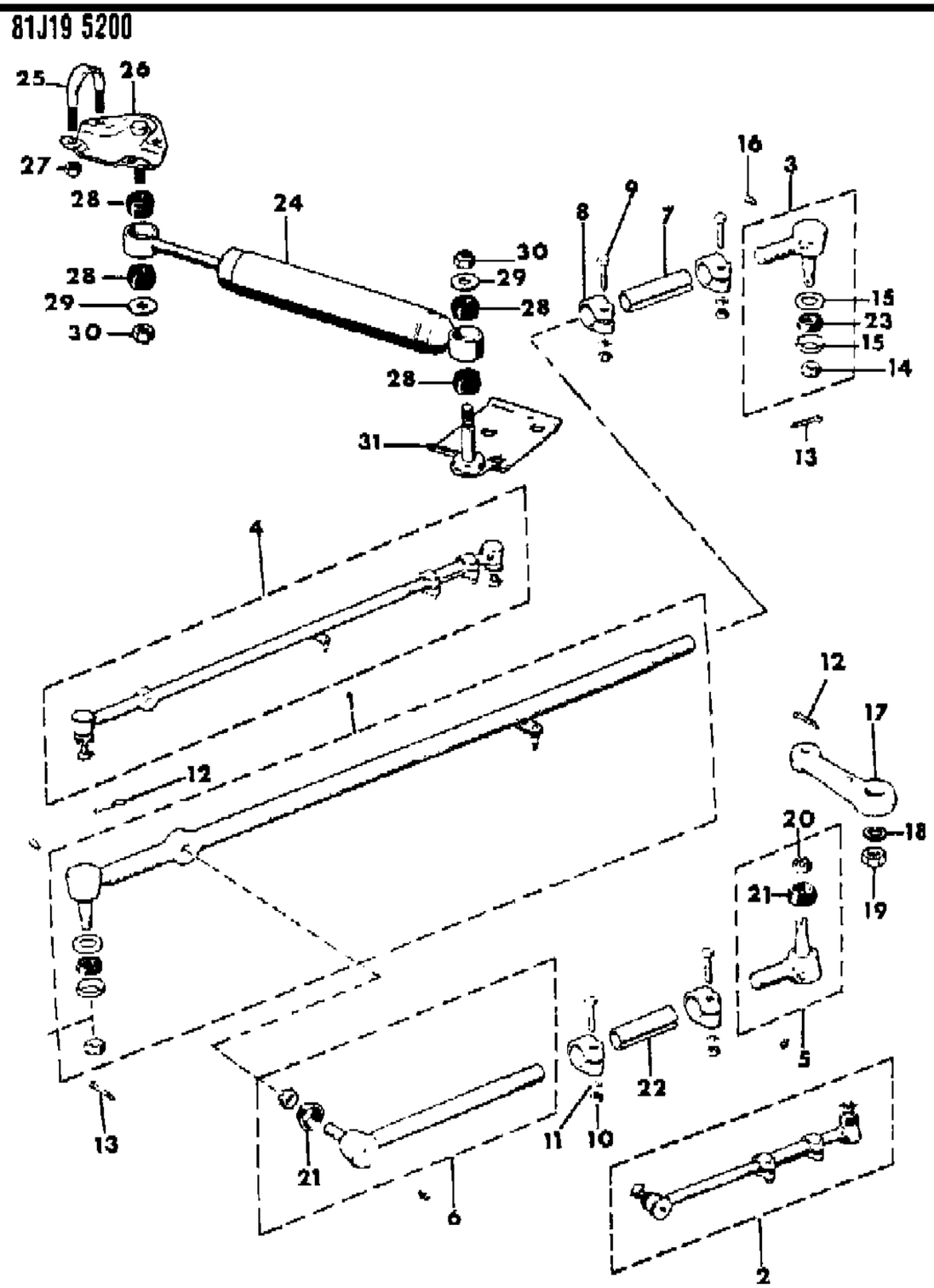

ITEM	PART NUMBER	QTY	BODY	MODEL	DESCRIPTION
20	J812 3318	2			NUT, Castle
21	J812 3317	2			COVER
22	J812 3320	1			TUBE
23	J812 4821	2			COVER
24	J812 9434	1			DAMPER
25	J094 0121	2			BOLT
26	J535 3384	1			BRACKET
27	J941 6531	4			NUT
28	J063 7936	4			CUSHION
29	J012 0389	2			WASHER
30	J941 3215	2			NUT
31	J535 9695	1			BRACKET

MODEL CODES

16=Cherokee 2 Dr.(1981-83)
17=Cherokee 2 Dr.(1981-83)
73=Cherokee 2WD-2 Dr.(1984-86)
74=Cherokee 2WD-4 Dr.(1984-86)
18=Cherokee 4 Dr.(1981-83)
77=Cherokee 4WD-2 Dr.(1984-86)
78=Cherokee 4WD-4 Dr.(1984-86)
85=CJ-5 (1981-83)
86=CJ-6(1981)
87=CJ-7(1981-86)
88=CJ-8, Scrambler(1981-86)
64=Comanche 2WD-6 Ft. Box(1986)
66=Comanche 2WD-7 Ft. Box(1986)
63=Comanche 4WD-6 Ft. Box(1986)
65=Comanche 4WD-7 Ft. Box(1986)
15=Grand Wagoneer 4 Dr.(1984-86)
25=J-10 Truck 7 Ft. Box(1981-84)
26=J10 Truck 8 Ft. Box(1981-86)
27=J-20 Truck 8 Ft. Box(1981-86)
15=Wagoneer 4 Dr.(1981-83)
75=Wagoneer 4WD-4 Dr.(1984-86)

BODY
CJ=CJ-5, CJ-6, CJ-7, CJ-8, Scrambler(1981-86)
MJ=Comanche Pickup(1986)

STYLES
SJ=Wagoneer(1981-83), Grand Wagoneer(1984-86), Cherokee(1981-83), J-10, J-20(1981-86)
XJ=Wagoneer(1984-86), Cherokee(1984-86)

AR = Use as Required - = Non Illustrated Part P.A.R. = Paint as Required

« RETURN TO GROUP INDEX

PUMP, POWER STEERING CJ-5,6,7,8, SCRAMBLER
Figure 19-5300

81J19 5300

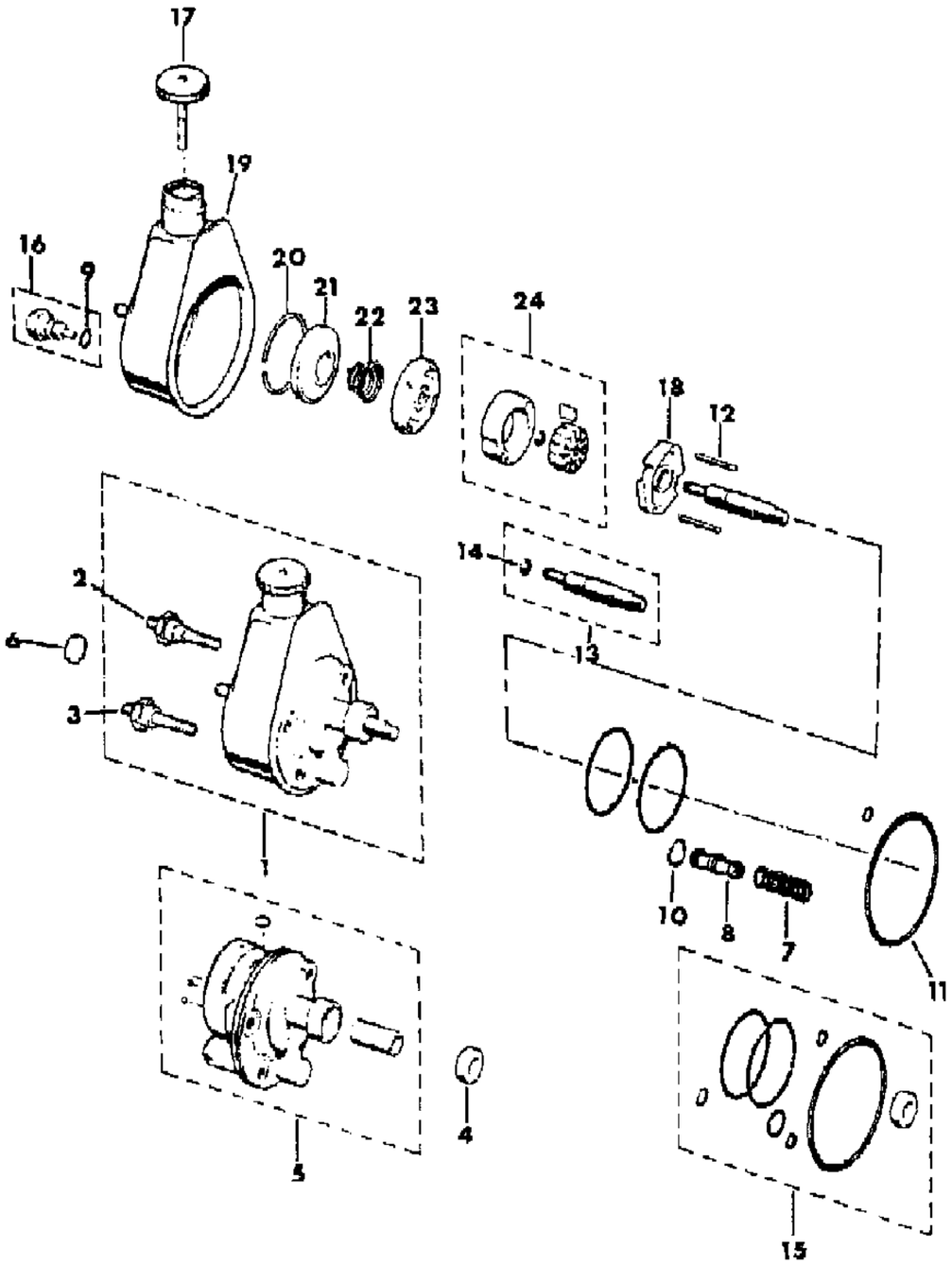

ITEM	PART NUMBER	QTY	BODY	MODEL	DESCRIPTION
1					PUMP, Power Steering
					Four Cylinder
	3300 1907	1			AMC
	J325 1017	1			GM
	J325 1017	1			Six Cylinder
	J325 1017	1			Eight Cylinder
	J325 1017	1			Diesel
2	J813 2474	1			STUD
3	J813 2475	1			STUD
4	J448 8330	1			SEAL
5	J813 2473	1			HOUSING, Pump
6	8350 0243	1			MAGNET ***
7	J320 9673	1			SPRING
8					VALVE, Check
					Four Cylinder
	J448 8026	1			AMC
	J812 0531	1			GM
	J812 0531	1			Six Cylinder
	J812 0531	1			Eight Cylinder
	J812 0531	1			Diesel
9	J320 9671	1			O-RING
10	8350 2171	1			O-RING
11	J320 9669	1			O-RING
12	J320 9660	2			PIN
13					SHAFT PACKAGE
	J813 3828	1			With Pumps Tagged With a "R" Suffix
	J812 5241	1			With Pumps Tagged With Any Other Suffix
14					RING, Snap
	J813 3827	1			With Pumps Tagged With a "R" Suffix
	J448 6725	1			With Pumps Tagged With Any Other Suffix
15	J320 9678	1			SEAL PACKAGE
16	J813 2472	1			FITTING
17					CAP
					Four Cylinder
	8350 0908	1			AMC
	J812 8467	1			GM
	J812 8467	1			Six Cylinder
	J812 8467	1			Eight Cylinder
	J812 8467	1			Diesel

MODEL CODES

16=Cherokee 2 Dr.(1981-83)
17=Cherokee 2 Dr.(1981-83)
73=Cherokee 2WD-2 Dr.(1984-86)
74=Cherokee 2WD-4 Dr.(1984-86)
18=Cherokee 4 Dr.(1981-83)
77=Cherokee 4WD-2 Dr.(1984-86)
78=Cherokee 4WD-4 Dr.(1984-86)
85=CJ-5 (1981-83)
86=CJ-6(1981)
87=CJ-7(1981-86)
88=CJ-8, Scrambler(1981-86)
64=Comanche 2WD-6 Ft. Box(1986)
66=Comanche 2WD-7 Ft. Box(1986)
63=Comanche 4WD-6 Ft. Box(1986)
65=Comanche 4WD-7 Ft. Box(1986)
15=Grand Wagoneer 4 Dr.(1984-86)
25=J-10 Truck 7 Ft. Box(1981-84)
26=J10 Truck 8 Ft. Box(1981-86)
27=J-20 Truck 8 Ft. Box(1981-86)
15=Wagoneer 4 Dr.(1981-83)
75=Wagoneer 4WD-4 Dr.(1984-86)

BODY
CJ=CJ-5, CJ-6, CJ-7, CJ-8, Scrambler(1981-86)
MJ=Comanche Pickup(1986)

STYLES
SJ=Wagoneer(1981-83), Grand Wagoneer(1984-86), Cherokee(1981-83), J-10, J-20(1981-86)
XJ=Wagoneer(1984-86), Cherokee(1984-86)

AR = Use as Required - = Non Illustrated Part P.A.R. = Paint as Required

« RETURN TO GROUP INDEX »

PUMP, POWER STEERING CJ-5,6,7,8, SCRAMBLER
Figure 19-5300

81J19 5300

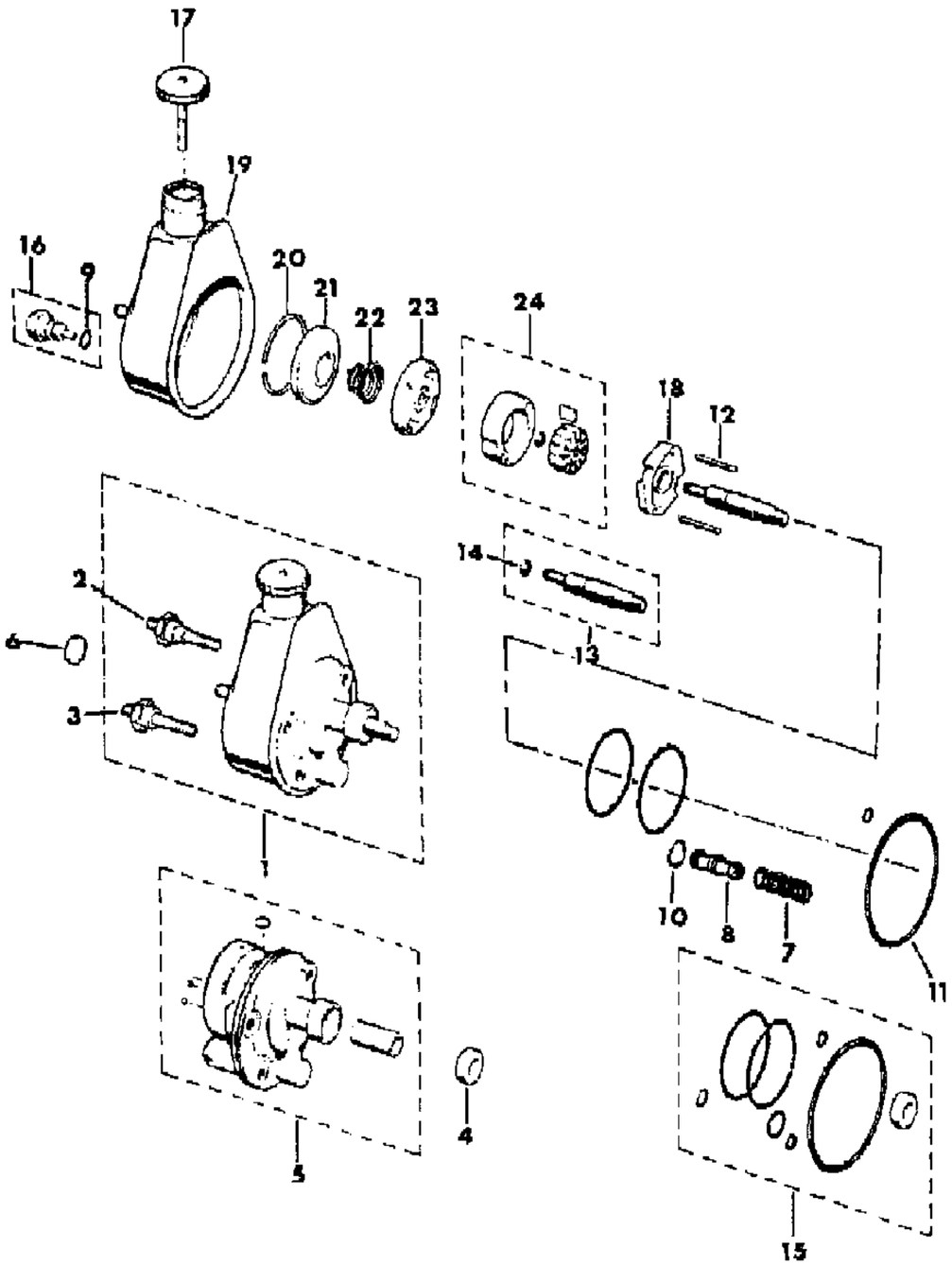

ITEM	PART NUMBER	QTY	BODY	MODEL	DESCRIPTION
18					PLATE
	8350 0071	1			With Pumps Tagged With a "R" Suffix
	J812 1412	1			With Pumps Tagged With Any Other Suffix
19					RESERVOIR
					Four Cylinder
	8350 0244	1			AMC
	J812 7369	1			GM
	J812 7369	1			Six Cylinder
	J812 7369	1			Eight Cylinder
	J812 7369	1			Diesel
20	J320 9664	1			RING, Retaining
21	J320 9661	1			PLATE
22					SPRING
	J813 3958	1			With Pumps Tagged With a "R" Suffix
	J320 9674	1			With Pumps Tagged With Any Other Suffix
23					PLATE, Pressure
	J813 3957	1			With Pumps Tagged With a "R" Suffix
	J320 9662	1			With Pumps Tagged With Any Other Suffix
24					ROTOR PACKAGE ***
	J813 3829	1			With Pumps Tagged With a "R" Suffix
	J812 7366	1			With Pumps Tagged With Any Other Suffix

MODEL CODES

16=Cherokee 2 Dr.(1981-83)
17=Cherokee 2 Dr.(1981-83)
73=Cherokee 2WD-2 Dr.(1984-86)
74=Cherokee 2WD-4 Dr.(1984-86)
18=Cherokee 4 Dr.(1981-83)
77=Cherokee 4WD-2 Dr.(1984-86)
78=Cherokee 4WD-4 Dr.(1984-86)
85=CJ-5 (1981-83)
86=CJ-6(1981)
87=CJ-7(1981-86)
88=CJ-8, Scrambler(1981-86)
64=Comanche 2WD-6 Ft. Box(1986)
66=Comanche 2WD-7 Ft. Box(1986)
63=Comanche 4WD-6 Ft. Box(1986)
65=Comanche 4WD-7 Ft. Box(1986)
15=Grand Wagoneer 4 Dr.(1984-86)
25=J-10 Truck 7 Ft. Box(1981-84)
26=J10 Truck 8 Ft. Box(1981-86)
27=J-20 Truck 8 Ft. Box(1981-86)
15=Wagoneer 4 Dr.(1981-83)
75=Wagoneer 4WD-4 Dr.(1984-86)

BODY
CJ=CJ-5, CJ-6, CJ-7, CJ-8, Scrambler(1981-86)
MJ=Comanche Pickup(1986)

STYLES
SJ=Wagoneer(1981-83), Grand Wagoneer(1984-86), Cherokee(1981-83), J-10, J-20(1981-86)
XJ=Wagoneer(1984-86), Cherokee(1984-86)

AR = Use as Required - = Non Illustrated Part P.A.R. = Paint as Required

« RETURN TO GROUP INDEX

PUMP, POWER STEERING FOUR OR SIX CYLINDER GAS ENGINE XJ CHEROKEE, XJ WAGONEER, COMANCHE
Figure 19-5400

81J19 5400D

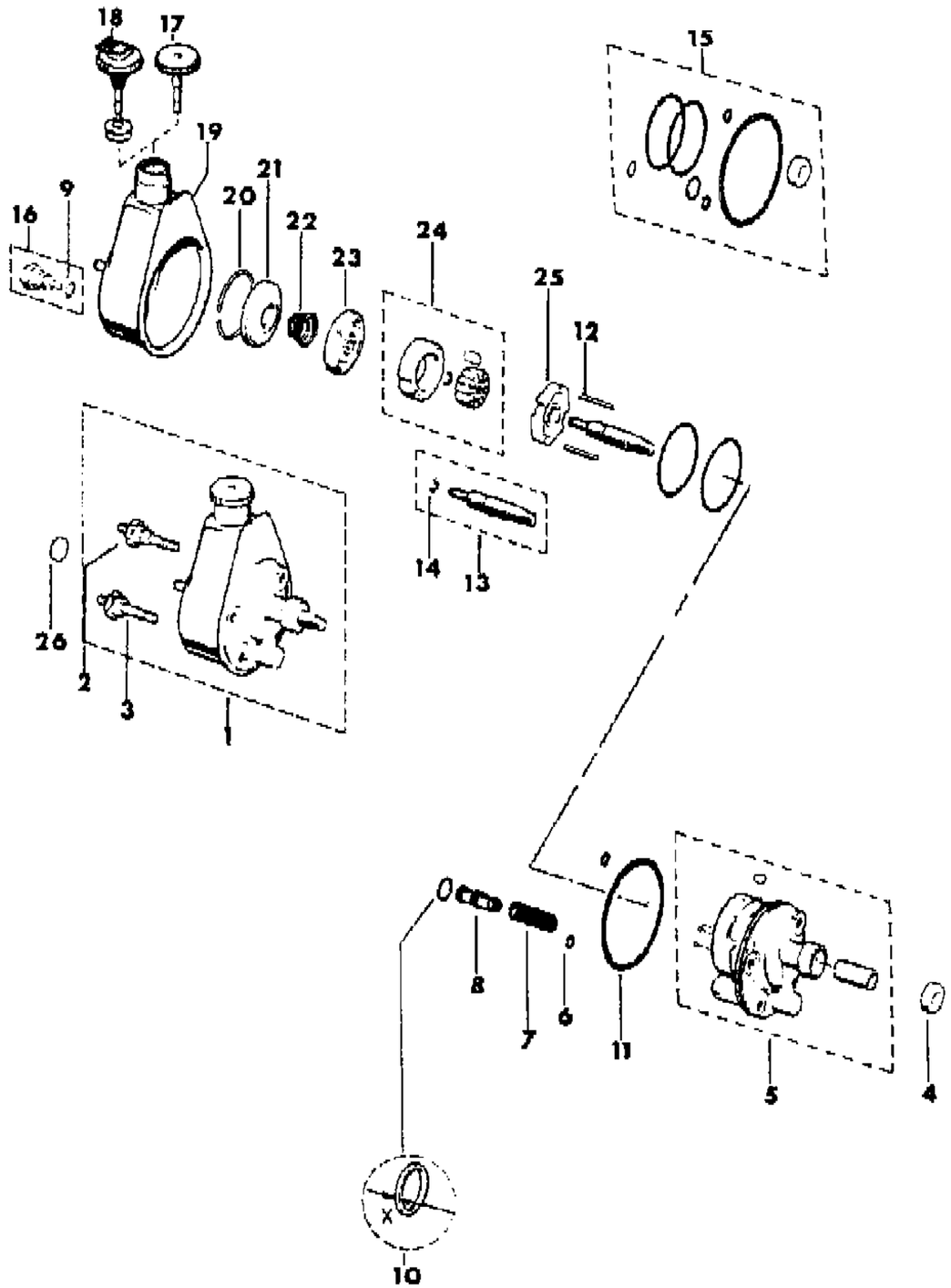

ITEM	PART NUMBER	QTY	BODY	MODEL	DESCRIPTION
1					PUMP, Power Steering
					Four Cylinder
	5300 0092	1			1984-85
	5300 3903	1			1986
					Six Cylinder
	5300 0719	1			1984-85
	5300 3904	1			1986
2					STUD
	J813 2474	1			Four Cylinder
	8350 0333	1			Six Cylinder
3					STUD
	J813 2475	1			Four Cylinder
	8350 0334	1			Six Cylinder
4	J448 8330	1			SEAL
5	J813 2473	1			HOUSING
6	J320 9672	2			SEAL
7	J320 9673	1			SPRING
8					CHECK VALVE
	J812 5923	1			Four Cylinder
	J812 0531	1			Six Cylinder
9	J320 9671	1			SEAL
10					SEAL
	J320 9670	1			.067" Thick
	8350 2151	1			.116" Thick
11	J320 9669	1			SEAL
12	J320 9660	2			PIN
13	J813 3828	1			SHAFT PACKAGE
14	J813 3827	1			RING, Snap
15					SEAL PACKAGE
	J320 9678	1			1984-85
	8350 2149	1			1986
16					FITTING
	J813 2472	1			1984-85
	8350 2088	1			1986
17					CAP
					Four Cylinder
	8350 0908	1			1984-85
	J812 8467	1			1986
	8350 0332	1			Six Cylinder

MODEL CODES

16=Cherokee 2 Dr.(1981-83)
17=Cherokee 2 Dr.(1981-83)
73=Cherokee 2WD-2 Dr.(1984-86)
74=Cherokee 2WD-4 Dr.(1984-86)
18=Cherokee 4 Dr.(1981-83)
77=Cherokee 4WD-2 Dr.(1984-86)
78=Cherokee 4WD-4 Dr.(1984-86)
85=CJ-5 (1981-83)
86=CJ-6(1981)
87=CJ-7(1981-86)
88=CJ-8, Scrambler(1981-86)
64=Comanche 2WD-6 Ft. Box(1986)
66=Comanche 2WD-7 Ft. Box(1986)
63=Comanche 4WD-6 Ft. Box(1986)
65=Comanche 4WD-7 Ft. Box(1986)
15=Grand Wagoneer 4 Dr.(1984-86)
25=J-10 Truck 7 Ft. Box(1981-84)
26=J10 Truck 8 Ft. Box(1981-86)
27=J-20 Truck 8 Ft. Box(1981-86)
15=Wagoneer 4 Dr.(1981-83)
75=Wagoneer 4WD-4 Dr.(1984-86)

BODY
CJ=CJ-5, CJ-6, CJ-7, CJ-8, Scrambler(1981-86)
MJ=Comanche Pickup(1986)

STYLES
SJ=Wagoneer(1981-83), Grand Wagoneer(1984-86), Cherokee(1981-83), J-10, J-20(1981-86)
XJ=Wagoneer(1984-86), Cherokee(1984-86)

AR = Use as Required - = Non Illustrated Part P.A.R. = Paint as Required

PUMP, POWER STEERING FOUR OR SIX CYLINDER GAS ENGINE XJ CHEROKEE, XJ WAGONEER, COMANCHE
Figure 19-5400

81J19 5400D

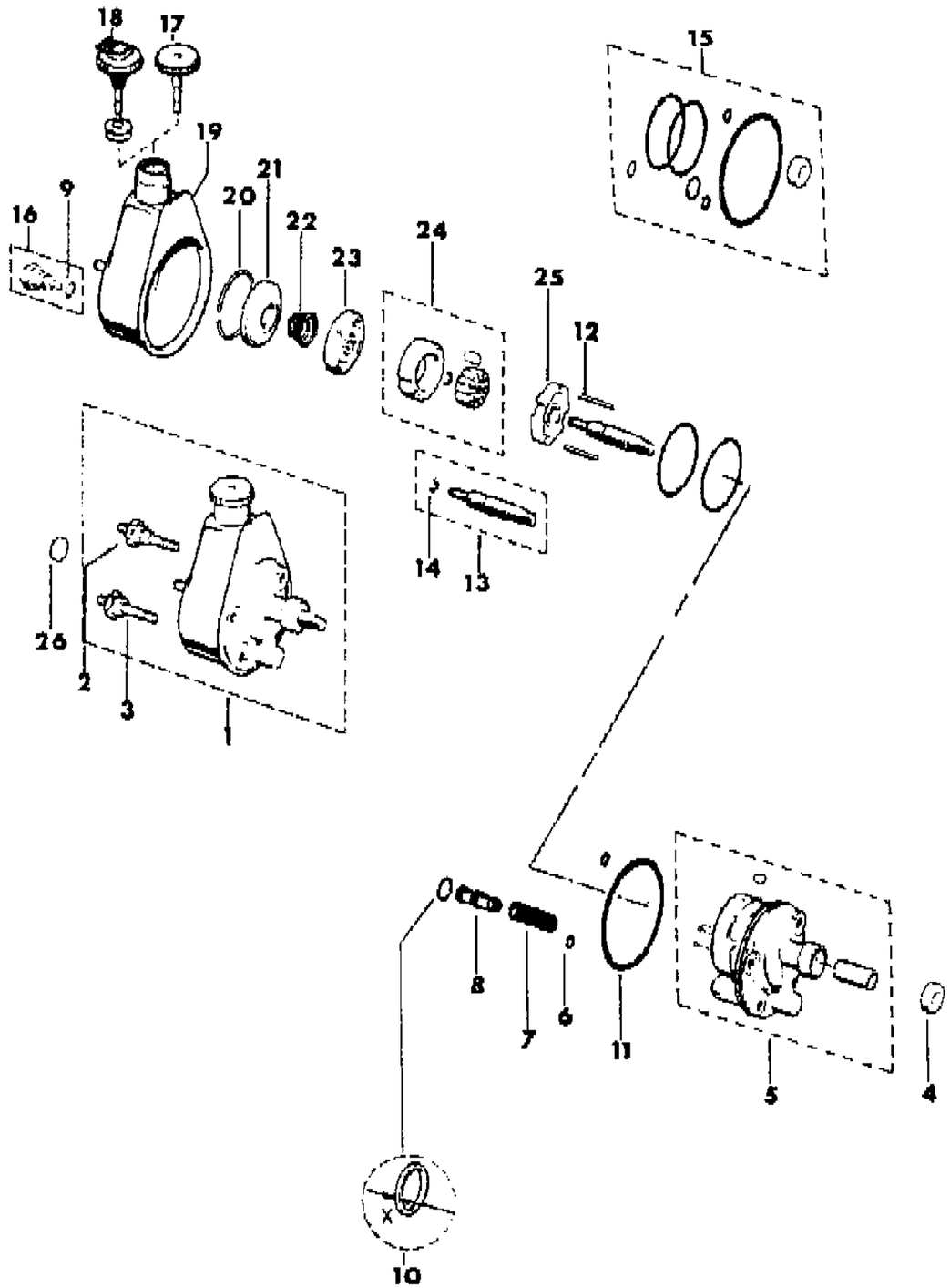

ITEM	PART NUMBER	QTY	BODY	MODEL	DESCRIPTION
18	5200 0651	1			CAP AND SENSOR ***
19					RESERVOIR
	8350 0244	1			Four Cylinder
	8350 0331	1			Six Cylinder
20	J320 9664	1			RING, Retaining
21	J320 9661	1			PLATE
22	J813 3958	1			SPRING
23	J813 3957	1			PLATE, Pressure
24	J813 3829	1			ROTOR PACKAGE ***
25	8350 0071	1			PLATE
26	8350 0243	1			MAGNET ***

MODEL CODES

16=Cherokee 2 Dr.(1981-83)
17=Cherokee 2 Dr.(1981-83)
73=Cherokee 2WD-2 Dr.(1984-86)
74=Cherokee 2WD-4 Dr.(1984-86)
18=Cherokee 4 Dr.(1981-83)
77=Cherokee 4WD-2 Dr.(1984-86)
78=Cherokee 4WD-4 Dr.(1984-86)
85=CJ-5 (1981-83)
86=CJ-6(1981)
87=CJ-7(1981-86)
88=CJ-8, Scrambler(1981-86)
64=Comanche 2WD-6 Ft. Box(1986)
66=Comanche 2WD-7 Ft. Box(1986)
63=Comanche 4WD-6 Ft. Box(1986)
65=Comanche 4WD-7 Ft. Box(1986)
15=Grand Wagoneer 4 Dr.(1984-86)
25=J-10 Truck 7 Ft. Box(1981-84)
26=J10 Truck 8 Ft. Box(1981-86)
27=J-20 Truck 8 Ft. Box(1981-86)
15=Wagoneer 4 Dr.(1981-83)
75=Wagoneer 4WD-4 Dr.(1984-86)

BODY
CJ=CJ-5, CJ-6, CJ-7, CJ-8, Scrambler(1981-86)
MJ=Comanche Pickup(1986)

STYLES
SJ=Wagoneer(1981-83), Grand Wagoneer(1984-86), Cherokee(1981-83), J-10, J-20(1981-86)
XJ=Wagoneer(1984-86), Cherokee(1984-86)

AR = Use as Required - = Non Illustrated Part P.A.R. = Paint as Required

« RETURN TO GROUP INDEX

PUMP, POWER STEERING DIESEL ENGINE XJ CHEROKEE, XJ WAGONEER, COMANCHE
Figure 19-5500

81J19 5500

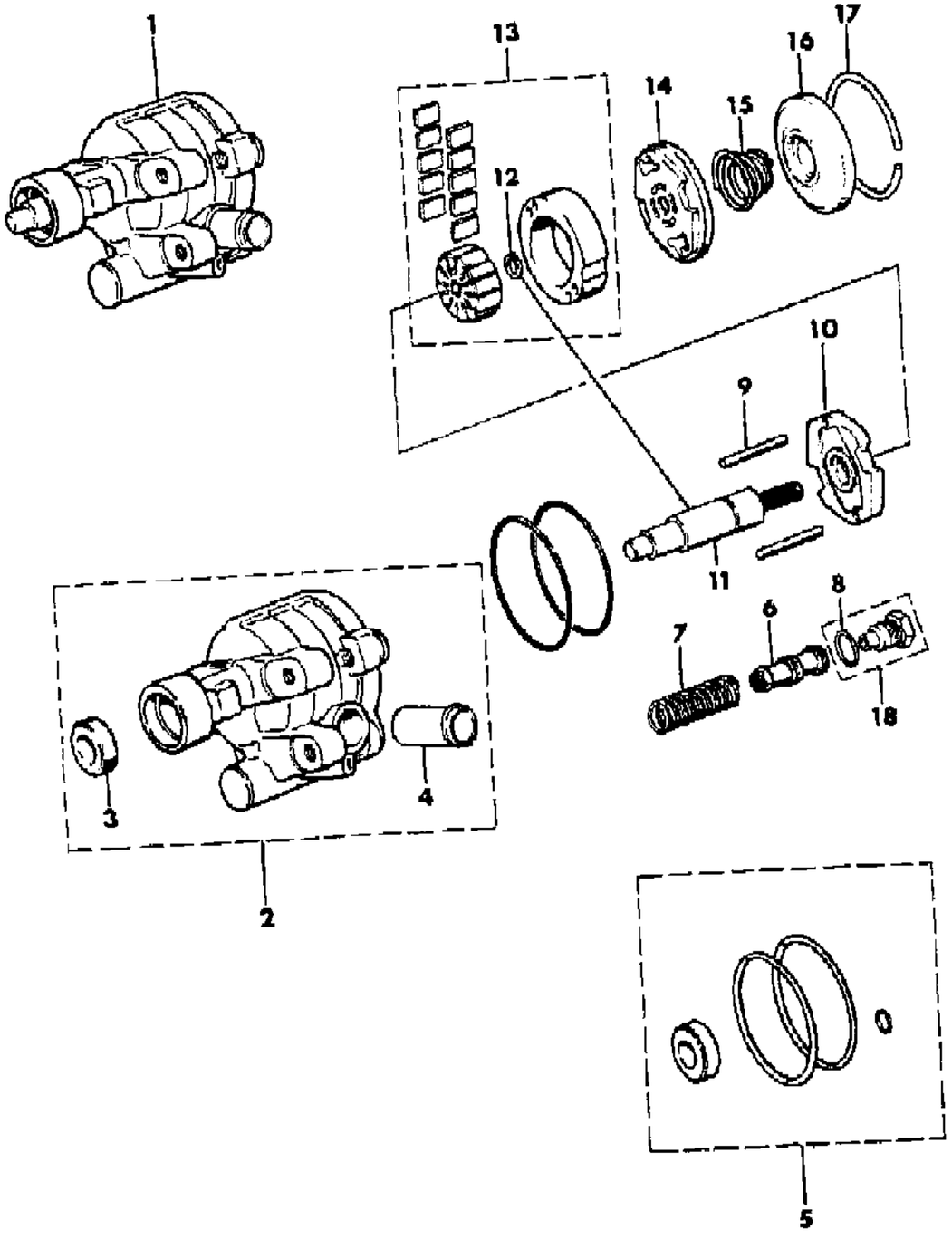

ITEM	PART NUMBER	QTY	BODY	MODEL	DESCRIPTION
1					PUMP, Power Steering
	5300 1765	1			1984-85
	5300 3996	1			1986
2	8350 0265	1			HOUSING
3	J448 8330	1			SEAL
4	8350 0266	1			TUBE
5	8350 0074	1			SEAL PACKAGE
6	J812 5923	1			CHECK VALVE
7	J320 9673	1			SPRING
8	J320 9671	1			SEAL
9	J320 9660	2			PIN
10	8350 0071	1			PLATE
11	J813 3828	1			SHAFT PACKAGE
12	8350 0075	1			RING, Snap
13	J813 3829	1			ROTOR PACKAGE ***
14	J813 3957	1			PLATE
15	J813 3958	1			SPRING
16	J320 9661	1			PLATE
17	J320 9664	1			RING, Retaining
18					FITTING
	J813 2472	1			1984-85
	8350 2088	1			1986

MODEL CODES

16=Cherokee 2 Dr.(1981-83)	78=Cherokee 4WD-4 Dr.(1984-86)	64=Comanche 2WD-6 Ft. Box(1986)	25=J-10 Truck 7 Ft. Box(1981-84)
17=Cherokee 2 Dr.(1981-83)	85=CJ-5 (1981-83)	66=Comanche 2WD-7 Ft. Box(1986)	26=J10 Truck 8 Ft. Box(1981-86)
73=Cherokee 2WD-2 Dr.(1984-86)	86=CJ-6(1981)	63=Comanche 4WD-6 Ft. Box(1986)	27=J-20 Truck 8 Ft. Box(1981-86)
74=Cherokee 2WD-4 Dr.(1984-86)	87=CJ-7(1981-86)	65=Comanche 4WD-7 Ft. Box(1986)	15=Wagoneer 4 Dr.(1981-83)
18=Cherokee 4 Dr.(1981-83)	88=CJ-8, Scrambler(1981-86)	15=Grand Wagoneer 4 Dr.(1984-86)	75=Wagoneer 4WD-4 Dr.(1984-86)
77=Cherokee 4WD-2 Dr.(1984-86)			

BODY
CJ=CJ-5, CJ-6, CJ-7, CJ-8, Scrambler(1981-86)
MJ=Comanche Pickup(1986)

STYLES
SJ=Wagoneer(1981-83), Grand Wagoneer(1984-86), Cherokee(1981-83), J-10, J-20(1981-86)
XJ=Wagoneer(1984-86), Cherokee(1984-86)

AR = Use as Required - = Non Illustrated Part P.A.R. = Paint as Required

« RETURN TO GROUP INDEX

PUMP, POWER STEERING SJ CHEROKEE, SJ WAGONEER, J10, J20
Figure 19-5600

81J19 5600

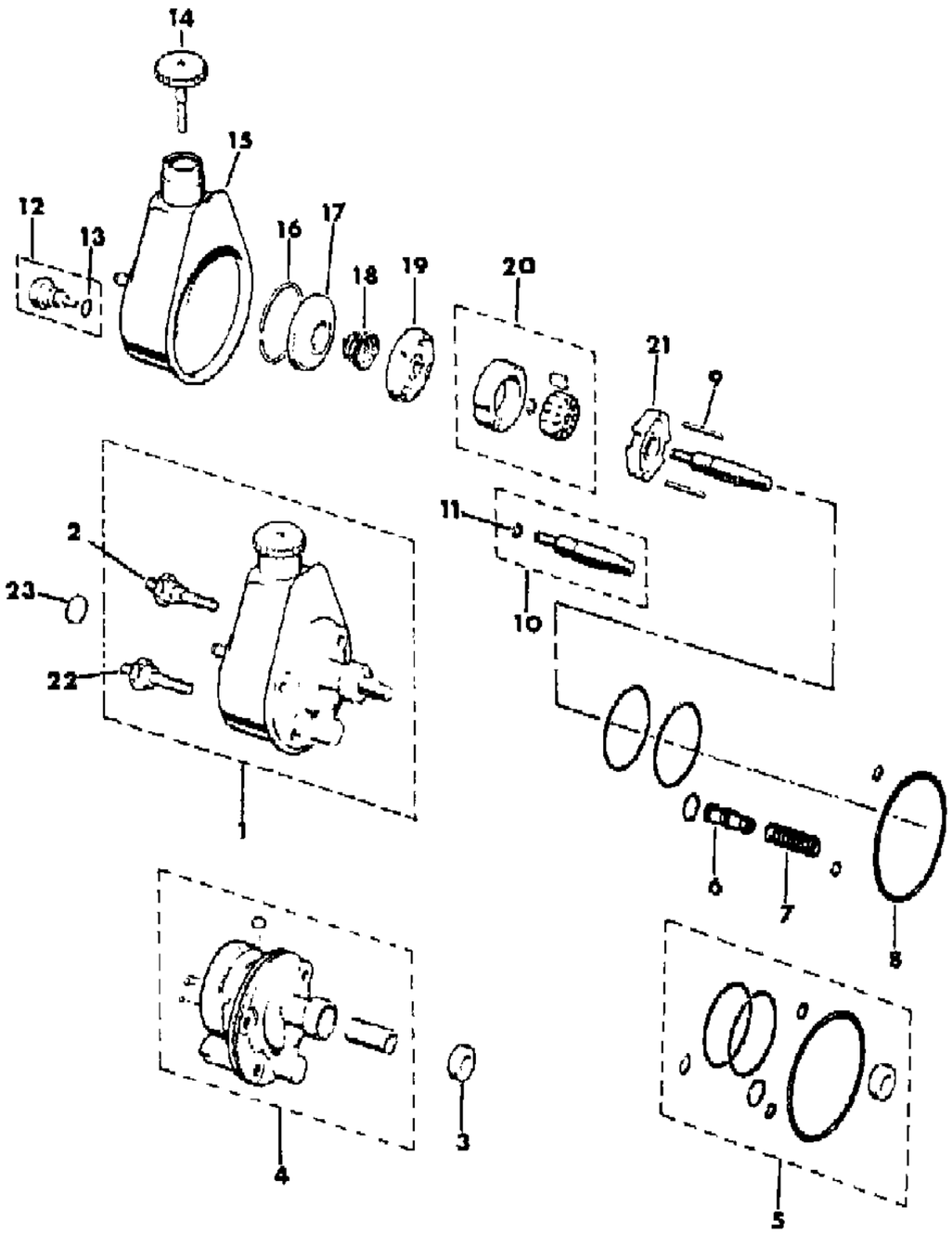

ITEM	PART NUMBER	QTY	BODY	MODEL	DESCRIPTION
1					PUMP, Power Steering
	J323 7193	1		15,16,1	1981-84
	J323 7193	1		25,26,2	1981-84
	5300 2714	1		15,26	1985-86
	J323 7193	1		27	1985-86
2	J813 2474	1			STUD
3	J448 8330	1			SEAL
4	J813 2473	1			HOUSING
5	J320 9678	1			SEAL PACKAGE
6	J812 5923	1			CHECK VALVE
7	J320 9673	1			SPRING
8	J320 9669	1			O-RING
9	J320 9660	2			PIN
10					SHAFT PACKAGE
	J813 3828	1			With Pumps Tagged With a "R" Suffix
	J812 5241	1			With Pumps Tagged With Any Other Suffix
11					RING, Snap
	J813 3827	1			With Pumps Tagged With a "R" Suffix
	J448 6725	1			With Pumps Tagged With Any Other Suffix
12					FITTING
	J813 2472	1			1981-84
	8350 2088	1		15,26	1985-86
	J813 2472	1		27	1985-86
13	J320 9671	1			O-RING
14	J812 8467	1			CAP
15	J812 7369	1			RESERVOIR
16	J320 9664	1			RING, Retaining
17	J320 9661	1			PLATE
18					SPRING
	J813 3958	1			With Pumps Tagged With a "R" Suffix
	J320 9674	1			With Pumps Tagged With Any Other Suffix
19					PLATE
	J813 3957	1			With Pumps Tagged With a "R" Suffix
	J320 9662	1			With Pumps Tagged With Any Other Suffix
20					ROTOR PACKAGE ***
	J813 3829	1			With Pumps Tagged With a "R" Suffix
	J812 7366	1			With Pumps Tagged With Any Other Suffix
21					PLATE
	8350 0071	1			With Pumps Tagged With a "R" Suffix

MODEL CODES

16=Cherokee 2 Dr.(1981-83)
17=Cherokee 2 Dr.(1981-83)
73=Cherokee 2WD-2 Dr.(1984-86)
74=Cherokee 2WD-4 Dr.(1984-86)
18=Cherokee 4 Dr.(1981-83)
77=Cherokee 4WD-2 Dr.(1984-86)
78=Cherokee 4WD-4 Dr.(1984-86)
85=CJ-5 (1981-83)
86=CJ-6(1981)
87=CJ-7(1981-86)
88=CJ-8, Scrambler(1981-86)
64=Comanche 2WD-6 Ft. Box(1986)
66=Comanche 2WD-7 Ft. Box(1986)
63=Comanche 4WD-6 Ft. Box(1986)
65=Comanche 4WD-7 Ft. Box(1986)
15=Grand Wagoneer 4 Dr.(1984-86)
25=J-10 Truck 7 Ft. Box(1981-84)
26=J10 Truck 8 Ft. Box(1981-86)
27=J-20 Truck 8 Ft. Box(1981-86)
15=Wagoneer 4 Dr.(1981-83)
75=Wagoneer 4WD-4 Dr.(1984-86)

BODY
CJ=CJ-5, CJ-6, CJ-7, CJ-8, Scrambler(1981-86)
MJ=Comanche Pickup(1986)

STYLES
SJ=Wagoneer(1981-83), Grand Wagoneer(1984-86), Cherokee(1981-83), J-10, J-20(1981-86)
XJ=Wagoneer(1984-86), Cherokee(1984-86)

AR = Use as Required - = Non Illustrated Part P.A.R. = Paint as Required

« RETURN TO GROUP INDEX »

PUMP, POWER STEERING SJ CHEROKEE, SJ WAGONEER, J10, J20
Figure 19-5600

81J19 5600

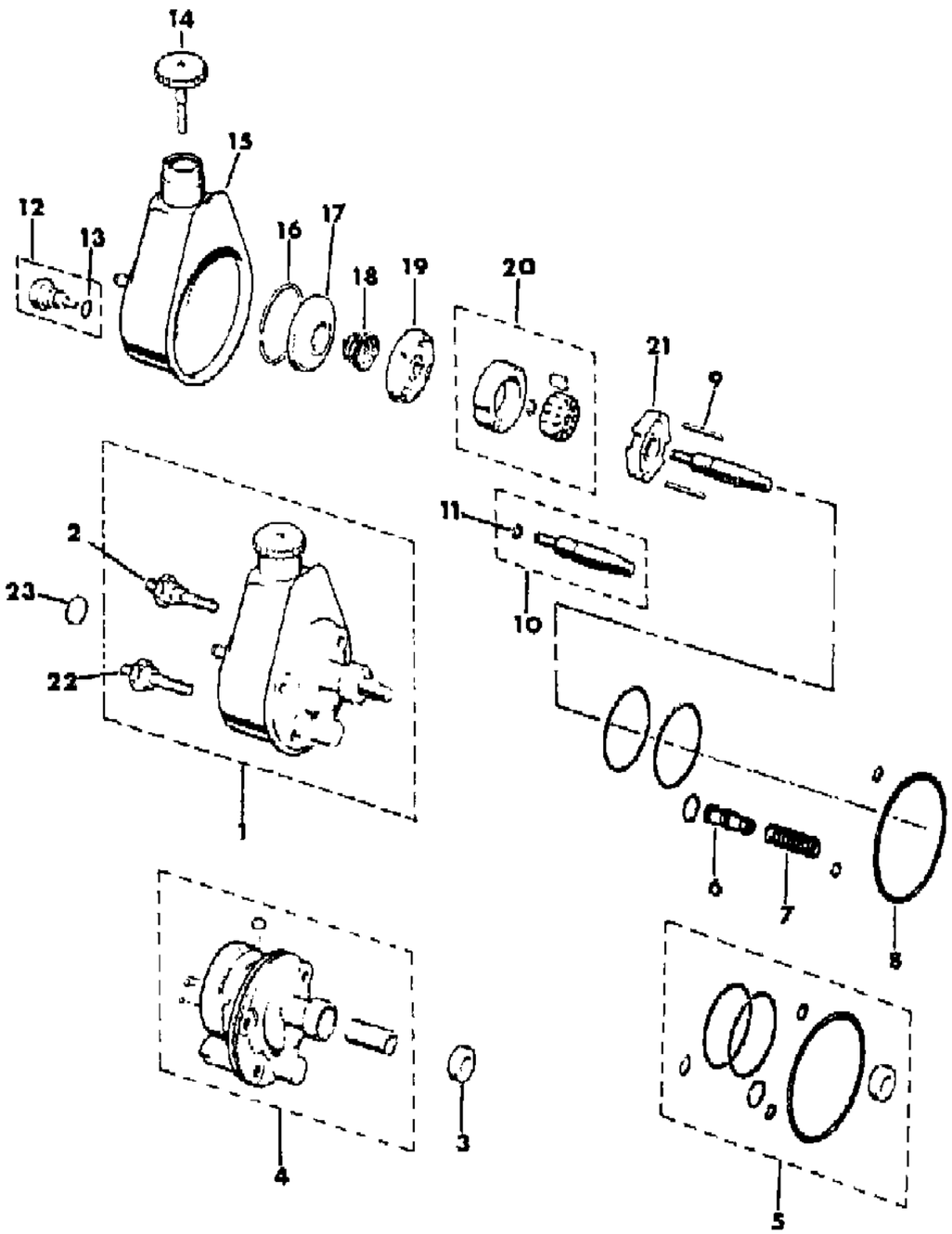

ITEM	PART NUMBER	QTY	BODY	MODEL	DESCRIPTION
	J812 1412	1			With Pumps Tagged With Any Other Suffix
22	J813 2475	1			STUD
23	8350 0243	1			MAGNET ***

MODEL CODES

16=Cherokee 2 Dr.(1981-83)
17=Cherokee 2 Dr.(1981-83)
73=Cherokee 2WD-2 Dr.(1984-86)
74=Cherokee 2WD-4 Dr.(1984-86)
18=Cherokee 4 Dr.(1981-83)
77=Cherokee 4WD-2 Dr.(1984-86)
78=Cherokee 4WD-4 Dr.(1984-86)
85=CJ-5 (1981-83)
86=CJ-6(1981)
87=CJ-7(1981-86)
88=CJ-8, Scrambler(1981-86)
64=Comanche 2WD-6 Ft. Box(1986)
66=Comanche 2WD-7 Ft. Box(1986)
63=Comanche 4WD-6 Ft. Box(1986)
65=Comanche 4WD-7 Ft. Box(1986)
15=Grand Wagoneer 4 Dr.(1984-86)
25=J-10 Truck 7 Ft. Box(1981-84)
26=J10 Truck 8 Ft. Box(1981-86)
27=J-20 Truck 8 Ft. Box(1981-86)
15=Wagoneer 4 Dr.(1981-83)
75=Wagoneer 4WD-4 Dr.(1984-86)

BODY
CJ=CJ-5, CJ-6, CJ-7, CJ-8, Scrambler(1981-86)
MJ=Comanche Pickup(1986)

STYLES
SJ=Wagoneer(1981-83), Grand Wagoneer(1984-86), Cherokee(1981-83), J-10, J-20(1981-86)
XJ=Wagoneer(1984-86), Cherokee(1984-86)

AR = Use as Required - = Non Illustrated Part P.A.R. = Paint as Required

« RETURN TO GROUP INDEX

PUMP MOUNTING, POWER STEERING GM FOUR CYLINDER CJ-5,6,7,8, SCRAMBLER
Figure 19-5700

81J19 5700

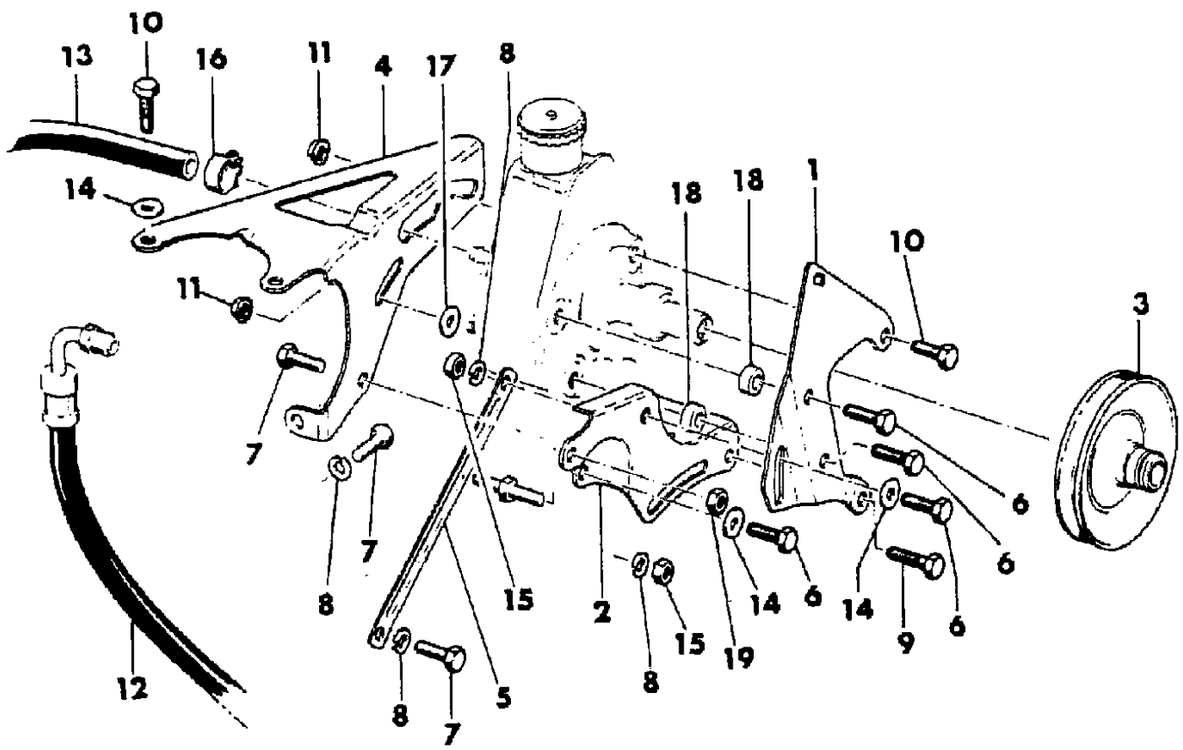

ITEM	PART NUMBER	QTY	BODY	MODEL	DESCRIPTION
1	J325 0724	1			BRACKET, Adjusting
2	J325 0723	1			BRACKET, Front
3	J323 7473	1			PULLEY, Pump
4	J325 0725	1			BRACKET, Rear
5	J325 0729	1			BRACE
6	1150 2606	4			BOLT
7	1150 0829	3			BOLT
8	1150 0207	4			WASHER
9	1150 0830	1			BOLT
10	1150 2685	1			BOLT
11	J420 0081	2			NUT
12					HOSE, Pressure
	J537 0045	1			1981
	J536 3659	1			1982-83
	J537 0101	1			1981-83: EXPORT, Right Hand Drive
13					HOSE, Return
	J537 0021	1			1981
	J536 3660	1			1982-83
	J537 0099	1			1981-83: EXPORT, Right Hand Drive
14	J420 0093	3			WASHER
15	1150 0424	2			NUT
16	J315 5600	1			CLAMP
17	J400 1829	1			WASHER
18	J325 1283	2			SPACER
19	1150 1850	1			NUT

MODEL CODES
16=Cherokee 2 Dr.(1981-83)
17=Cherokee 2 Dr.(1981-83)
73=Cherokee 2WD-2 Dr.(1984-86)
74=Cherokee 2WD-4 Dr.(1984-86)
18=Cherokee 4 Dr.(1981-83)
77=Cherokee 4WD-2 Dr.(1984-86)
78=Cherokee 4WD-4 Dr.(1984-86)
85=CJ-5 (1981-83)
86=CJ-6(1981)
87=CJ-7(1981-86)
88=CJ-8, Scrambler(1981-86)
64=Comanche 2WD-6 Ft. Box(1986)
66=Comanche 2WD-7 Ft. Box(1986)
63=Comanche 4WD-6 Ft. Box(1986)
65=Comanche 4WD-7 Ft. Box(1986)
15=Grand Wagoneer 4 Dr.(1984-86)
25=J-10 Truck 7 Ft. Box(1981-84)
26=J10 Truck 8 Ft. Box(1981-86)
27=J-20 Truck 8 Ft. Box(1981-86)
15=Wagoneer 4 Dr.(1981-83)
75=Wagoneer 4WD-4 Dr.(1984-86)

BODY
CJ=CJ-5, CJ-6, CJ-7, CJ-8, Scrambler(1981-86)
MJ=Comanche Pickup(1986)

STYLES
SJ=Wagoneer(1981-83), Grand Wagoneer(1984-86), Cherokee(1981-83), J-10, J-20(1981-86)
XJ=Wagoneer(1984-86), Cherokee(1984-86)

AR = Use as Required - = Non Illustrated Part P.A.R. = Paint as Required

« RETURN TO GROUP INDEX

PUMP MOUNTING, POWER STEERING AMC FOUR OR SIX CYLINDER AND DIESEL CJ-5,6,7,8, SCRAMBLER
Figure 19-5800

81J19 5800

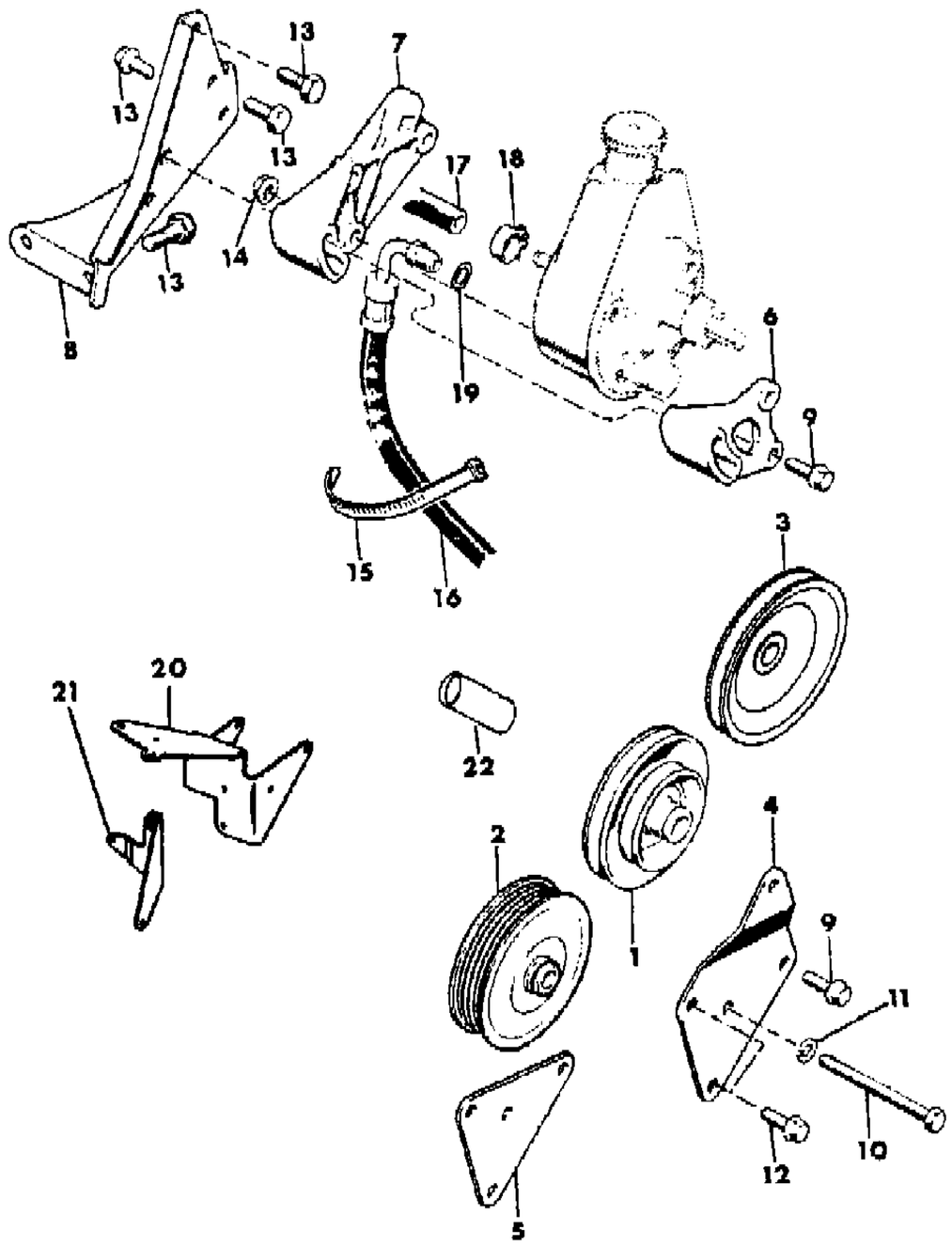

ITEM	PART NUMBER	QTY	BODY	MODEL	DESCRIPTION
1					PULLEY, Pump
	J322 6940	1			Six Cylinder, With Double Pulley
2					PULLEY, Pump
	J323 8275	1			Six Cylinder, With Serpentine Belt Drive
3					PULLEY, Pump
	J323 7473	1			Four Cylinder
	J322 6937	1			Six Cylinder, With Single Pulley
	J322 6937	1			Diesel
4					BRACKET, Front
					Six Cylinder
	J323 7571	1			California
	J323 7571	1			EXPORT, Japan
	J323 8264	1			EXPORT, Australian Design Rule, Economic Commission of Europe
5					BRACKET, Front
	J323 7232	1			Four Cylinder
	J323 7232	1			Six Cylinder
6	J323 4993	1			BRACKET, Front Adjustment
7	J323 8265	1			BRACKET, Rear Adjustment
8	J323 8661	1			BRACKET, Rear Mounting
9	1150 2606	1			BOLT
10	J018 9295	1			BOLT
11	J400 3803	1			WASHER
12	J027 4195	2			BOLT
13	J027 3773	3			BOLT
14	1150 1850	3			NUT
15	J322 3227	1			STRAP
16					HOSE, Pressure
					Four Cylinder
	J536 4672	1			
	J537 0142	1			EXPORT, Right Hand Drive
					Six Cylinder
	J537 0112	1			1981
	J536 3661	1			1982-86
	J537 0100	1			1981-86: EXPORT, Right Hand Drive
					Diesel
	J537 0120	1			EXPORT, Left Hand Drive
	J537 0121	1			EXPORT, Right Hand Drive
17					HOSE, Return

MODEL CODES

16=Cherokee 2 Dr.(1981-83)	78=Cherokee 4WD-4 Dr.(1984-86)	64=Comanche 2WD-6 Ft. Box(1986)	25=J-10 Truck 7 Ft. Box(1981-84)
17=Cherokee 2 Dr.(1981-83)	85=CJ-5 (1981-83)	66=Comanche 2WD-7 Ft. Box(1986)	26=J10 Truck 8 Ft. Box(1981-86)
73=Cherokee 2WD-2 Dr.(1984-86)	86=CJ-6(1981)	63=Comanche 4WD-6 Ft. Box(1986)	27=J-20 Truck 8 Ft. Box(1981-86)
74=Cherokee 2WD-4 Dr.(1984-86)	87=CJ-7(1981-86)	65=Comanche 4WD-7 Ft. Box(1986)	15=Wagoneer 4 Dr.(1981-83)
18=Cherokee 4 Dr.(1981-83)	88=CJ-8, Scrambler(1981-86)	15=Grand Wagoneer 4 Dr.(1984-86)	75=Wagoneer 4WD-4 Dr.(1984-86)
77=Cherokee 4WD-2 Dr.(1984-86)			

BODY
CJ=CJ-5, CJ-6, CJ-7, CJ-8, Scrambler(1981-86)
MJ=Comanche Pickup(1986)

STYLES
SJ=Wagoneer(1981-83), Grand Wagoneer(1984-86), Cherokee(1981-83), J-10, J-20(1981-86)
XJ=Wagoneer(1984-86), Cherokee(1984-86)

AR = Use as Required - = Non Illustrated Part P.A.R. = Paint as Required

PUMP MOUNTING, POWER STEERING AMC FOUR OR SIX CYLINDER AND DIESEL CJ-5,6,7,8, SCRAMBLER
Figure 19-5800

81J19 5800

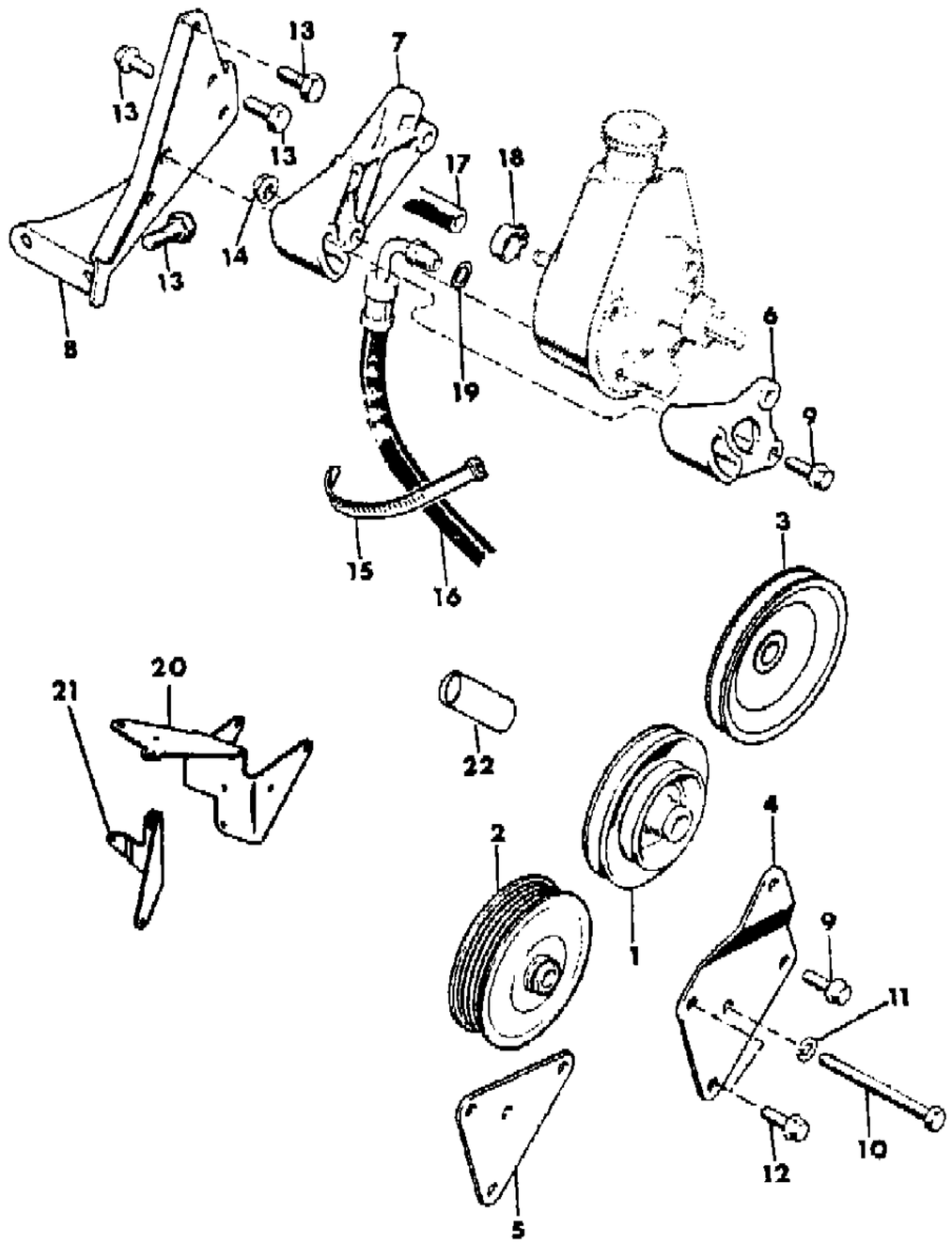

ITEM	PART NUMBER	QTY	BODY	MODEL	DESCRIPTION
					Four Cylinder
	J536 4673	1			
	J537 0143	1			EXPORT, Right Hand Drive
					Six Cylinder
	J537 0111	1			1981
	J536 3662	1			1982-86
	J537 0098	1			1981-86: EXPORT, Right Hand Drive
					Diesel
	J536 3660	1			Left Hand Drive
	J537 0099	1			Right Hand Drive
18	J315 5600	1			CLAMP
19	J325 1183	1			O-RING
20					BRACKET, Upper Mounting
	J536 4119	1			Diesel
21					BRACKET, Lower Mounting
	J536 4130	1			Diesel
22	J535 4540	2			GROMMET

MODEL CODES

16=Cherokee 2 Dr.(1981-83)
17=Cherokee 2 Dr.(1981-83)
73=Cherokee 2WD-2 Dr.(1984-86)
74=Cherokee 2WD-4 Dr.(1984-86)
18=Cherokee 4 Dr.(1981-83)
77=Cherokee 4WD-2 Dr.(1984-86)
78=Cherokee 4WD-4 Dr.(1984-86)
85=CJ-5 (1981-83)
86=CJ-6(1981)
87=CJ-7(1981-86)
88=CJ-8, Scrambler(1981-86)
64=Comanche 2WD-6 Ft. Box(1986)
66=Comanche 2WD-7 Ft. Box(1986)
63=Comanche 4WD-6 Ft. Box(1986)
65=Comanche 4WD-7 Ft. Box(1986)
15=Grand Wagoneer 4 Dr.(1984-86)
25=J-10 Truck 7 Ft. Box(1981-84)
26=J10 Truck 8 Ft. Box(1981-86)
27=J-20 Truck 8 Ft. Box(1981-86)
15=Wagoneer 4 Dr.(1981-83)
75=Wagoneer 4WD-4 Dr.(1984-86)

BODY
CJ=CJ-5, CJ-6, CJ-7, CJ-8, Scrambler(1981-86)
MJ=Comanche Pickup(1986)

STYLES
SJ=Wagoneer(1981-83), Grand Wagoneer(1984-86), Cherokee(1981-83), J-10, J-20(1981-86)
XJ=Wagoneer(1984-86), Cherokee(1984-86)

AR = Use as Required - = Non Illustrated Part P.A.R. = Paint as Required

PUMP MOUNTING, POWER STEERING EIGHT CYLINDER CJ-5,6,7,8, SCRAMBLER
Figure 19-5900

81J19 5900

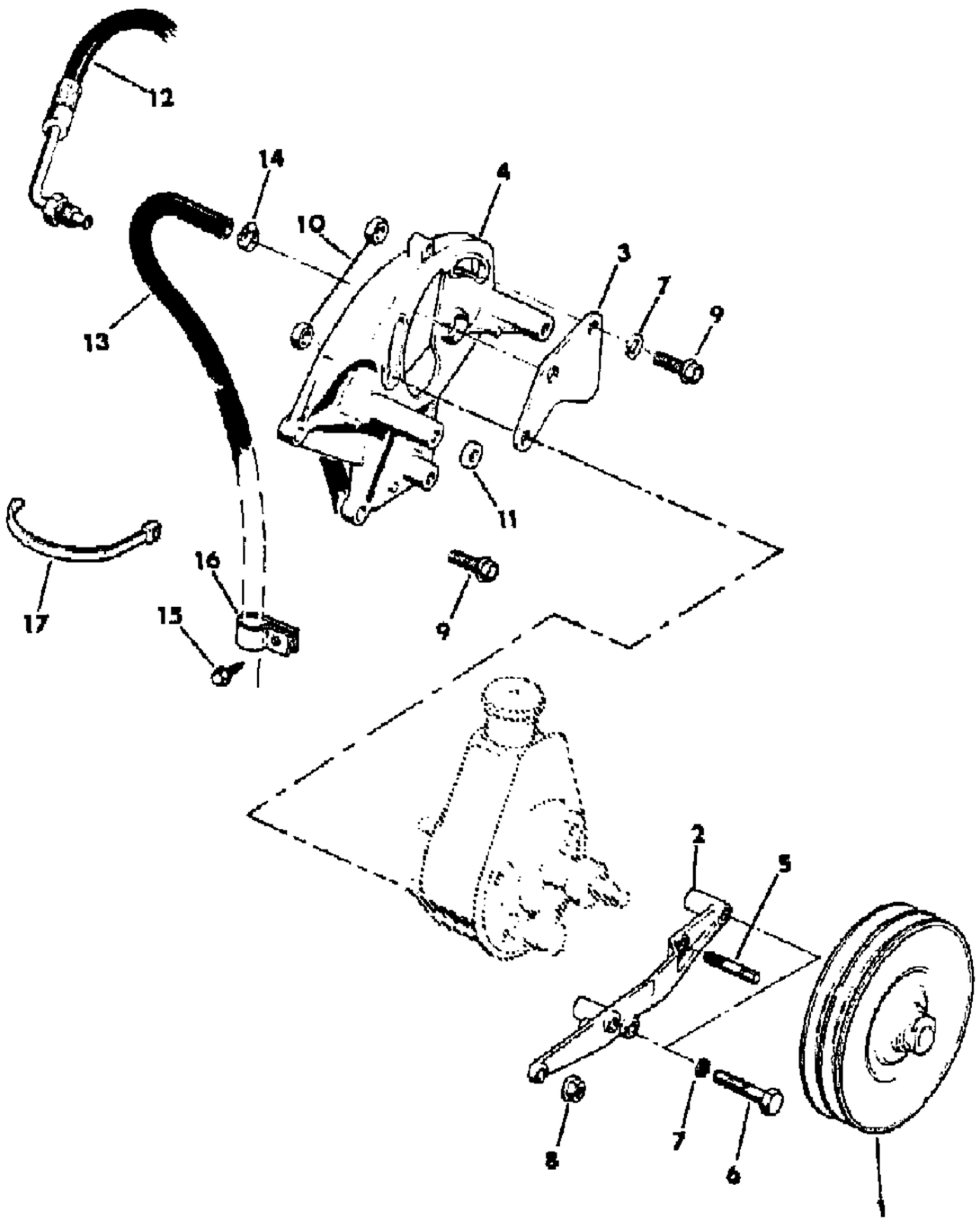

ITEM	PART NUMBER	QTY	BODY	MODEL	DESCRIPTION
1	J322 7674	1			PULLEY
2	J323 4995	1			BRACKET
3	J323 0990	1			BRACKET
4	J323 4992	1			BRACKET
5	J420 0080	1			STUD
6	J018 0137	2			BOLT
7	J400 3803	3			WASHER, Lock
8	J400 3869	1			NUT
9	J018 0125	1			BOLT
10	J012 0377	2			NUT
11	J400 1104	3			WASHER, Flat
12	J537 0016	1			HOSE, Pressure
13	J537 0017	1			HOSE, Return
14	J315 5600	1			CLAMP
15	J812 2378	1			BOLT
16	J400 4892	1			CLIP
17	J322 3227	1			STRAP

MODEL CODES

16=Cherokee 2 Dr.(1981-83)
17=Cherokee 2 Dr.(1981-83)
73=Cherokee 2WD-2 Dr.(1984-86)
74=Cherokee 2WD-4 Dr.(1984-86)
18=Cherokee 4 Dr.(1981-83)
77=Cherokee 4WD-2 Dr.(1984-86)
78=Cherokee 4WD-4 Dr.(1984-86)
85=CJ-5 (1981-83)
86=CJ-6(1981)
87=CJ-7(1981-86)
88=CJ-8, Scrambler(1981-86)
64=Comanche 2WD-6 Ft. Box(1986)
66=Comanche 2WD-7 Ft. Box(1986)
63=Comanche 4WD-6 Ft. Box(1986)
65=Comanche 4WD-7 Ft. Box(1986)
15=Grand Wagoneer 4 Dr.(1984-86)
25=J-10 Truck 7 Ft. Box(1981-84)
26=J10 Truck 8 Ft. Box(1981-86)
27=J-20 Truck 8 Ft. Box(1981-86)
15=Wagoneer 4 Dr.(1981-83)
75=Wagoneer 4WD-4 Dr.(1984-86)

BODY
CJ=CJ-5, CJ-6, CJ-7, CJ-8, Scrambler(1981-86)
MJ=Comanche Pickup(1986)

STYLES
SJ=Wagoneer(1981-83), Grand Wagoneer(1984-86), Cherokee(1981-83), J-10, J-20(1981-86)
XJ=Wagoneer(1984-86), Cherokee(1984-86)

AR = Use as Required - = Non Illustrated Part P.A.R. = Paint as Required

« RETURN TO GROUP INDEX

PUMP MOUNTING, POWER STEERING FOUR CYLINDER XJ CHEROKEE, XJ WAGONEER, COMANCHE
Figure 19-6000

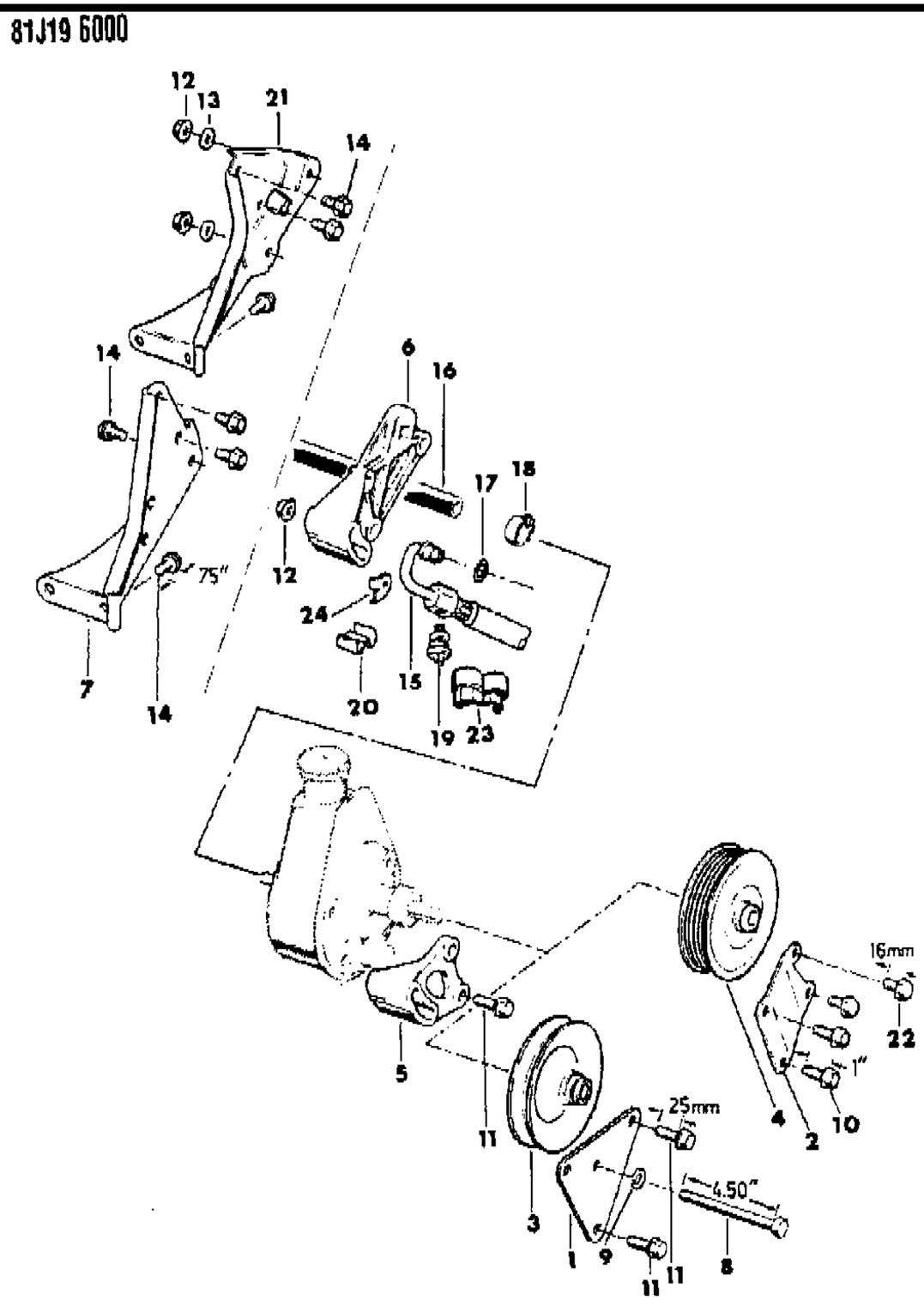

ITEM	PART NUMBER	QTY	BODY	MODEL	DESCRIPTION
1					BRACKET
	J323 7232	1			Without Air Conditioning
	J323 7232	1			With American Air Conditioning
2					BRACKET
	5300 0096	1			With Factory Air Conditioning
3					PULLEY,Pump
	J322 6937	1			Without Air Conditioning
	J322 6937	1			With American Air Conditioning
4					PULLEY, Pump
	J323 8275	1			With Factory Air Conditioning
5	J323 4993	1			BRACKET
6	J323 8265	1			BRACKET
7					BRACKET
	J323 8661	1			Without Air Conditioning
	J323 8661	1			With American Air Conditioning
8	J018 9295	1			BOLT
9	J400 3803	1			WASHER
10	J027 4195	2			BOLT
11	1150 2606	2			BOLT
12	1150 1850	2			NUT
13	J420 0093	1			WASHER
14	J027 3773	4			BOLT
15					HOSE, Pressure
	5200 1141	1			1984-85
	5200 2719	1			1986
16					HOSE, Return
					With Factory Air Conditioning
	5200 1140	1			1984-85
	5200 2720	1			1986
	5200 1231	1			With American Air Conditioning
	5200 1231	1			Without Air Conditioning
17	J325 1183	3			SEAL
18	J315 5600	1			CLAMP
19	5300 0970	1			SWITCH, Power Steering High Pressure
20	5200 1142	1			CLIP
21					BRACKET
	3300 1546	1			With Factory Air Conditioning
22	3420 1868	2			BOLT
23	J417 5241	1			CLAMP

MODEL CODES

16=Cherokee 2 Dr.(1981-83)
17=Cherokee 2 Dr.(1981-83)
73=Cherokee 2WD-2 Dr.(1984-86)
74=Cherokee 2WD-4 Dr.(1984-86)
18=Cherokee 4 Dr.(1981-83)
77=Cherokee 4WD-2 Dr.(1984-86)
78=Cherokee 4WD-4 Dr.(1984-86)
85=CJ-5 (1981-83)
86=CJ-6(1981)
87=CJ-7(1981-86)
88=CJ-8, Scrambler(1981-86)
64=Comanche 2WD-6 Ft. Box(1986)
66=Comanche 2WD-7 Ft. Box(1986)
63=Comanche 4WD-6 Ft. Box(1986)
65=Comanche 4WD-7 Ft. Box(1986)
15=Grand Wagoneer 4 Dr.(1984-86)
25=J-10 Truck 7 Ft. Box(1981-84)
26=J10 Truck 8 Ft. Box(1981-86)
27=J-20 Truck 8 Ft. Box(1981-86)
15=Wagoneer 4 Dr.(1981-83)
75=Wagoneer 4WD-4 Dr.(1984-86)

BODY
CJ=CJ-5, CJ-6, CJ-7, CJ-8, Scrambler(1981-86)
MJ=Comanche Pickup(1986)

STYLES
SJ=Wagoneer(1981-83), Grand Wagoneer(1984-86), Cherokee(1981-83), J-10, J-20(1981-86)
XJ=Wagoneer(1984-86), Cherokee(1984-86)

AR = Use as Required - = Non Illustrated Part P.A.R. = Paint as Required

PUMP MOUNTING, POWER STEERING FOUR CYLINDER XJ CHEROKEE, XJ WAGONEER, COMANCHE
Figure 19-6000

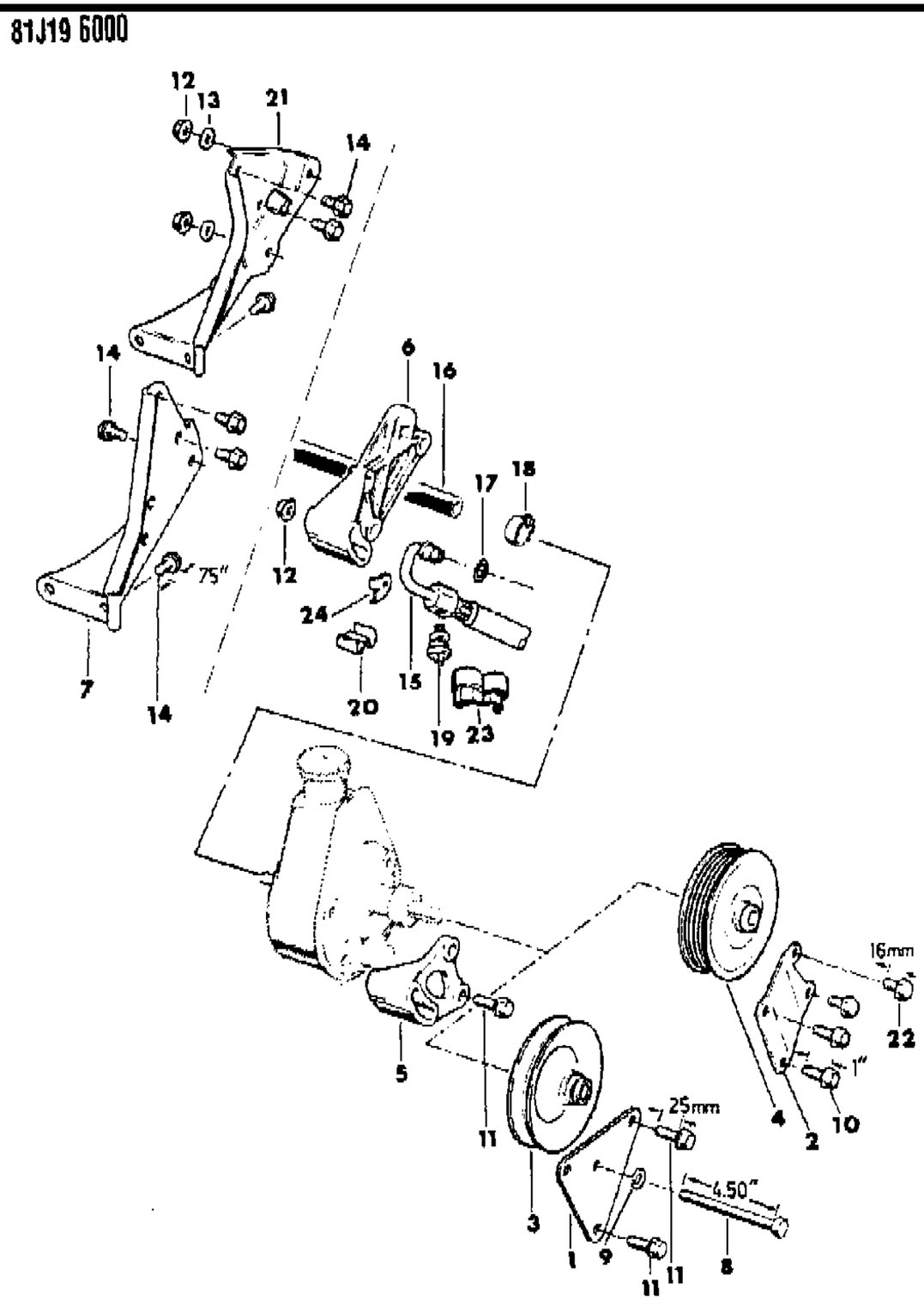

ITEM	PART NUMBER	QTY	BODY	MODEL	DESCRIPTION
24	5200 2856	1			BRACKET

MODEL CODES

16=Cherokee 2 Dr.(1981-83)	78=Cherokee 4WD-4 Dr.(1984-86)	64=Comanche 2WD-6 Ft. Box(1986)	25=J-10 Truck 7 Ft. Box(1981-84)
17=Cherokee 2 Dr.(1981-83)	85=CJ-5 (1981-83)	66=Comanche 2WD-7 Ft. Box(1986)	26=J10 Truck 8 Ft. Box(1981-86)
73=Cherokee 2WD-2 Dr.(1984-86)	86=CJ-6(1981)	63=Comanche 4WD-6 Ft. Box(1986)	27=J-20 Truck 8 Ft. Box(1981-86)
74=Cherokee 2WD-4 Dr.(1984-86)	87=CJ-7(1981-86)	65=Comanche 4WD-7 Ft. Box(1986)	15=Wagoneer 4 Dr.(1981-83)
18=Cherokee 4 Dr.(1981-83)	88=CJ-8, Scrambler(1981-86)	15=Grand Wagoneer 4 Dr.(1984-86)	75=Wagoneer 4WD-4 Dr.(1984-86)
77=Cherokee 4WD-2 Dr.(1984-86)			

BODY
CJ=CJ-5, CJ-6, CJ-7, CJ-8, Scrambler(1981-86)
MJ=Comanche Pickup(1986)

STYLES
SJ=Wagoneer(1981-83), Grand Wagoneer(1984-86), Cherokee(1981-83), J-10, J-20(1981-86)
XJ=Wagoneer(1984-86), Cherokee(1984-86)

AR = Use as Required - = Non Illustrated Part P.A.R. = Paint as Required

« RETURN TO GROUP INDEX

PUMP MOUNTING, POWER STEERING SIX CYLINDER XJ CHEROKEE, XJ WAGONEER, COMANCHE
Figure 19-6100

81J19 6100

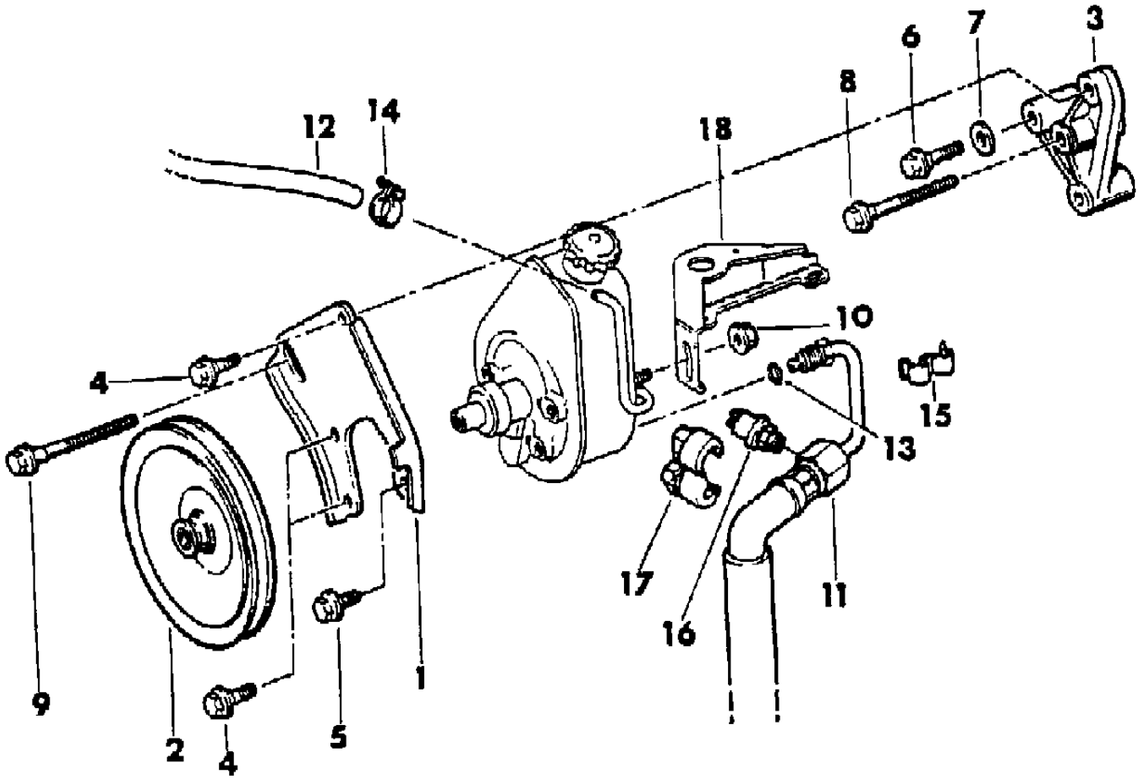

ITEM	PART NUMBER	QTY	BODY	MODEL	DESCRIPTION
1	5300 0095	1			BRACKET
2	5300 0093	1			PULLEY, Pump
3	5300 0621	1			BRACKET
4	1150 2606	3			BOLT
5	1150 2685	1			BOLT
6	S150 0832	1			BOLT
7	1150 0256	1			WASHER
8	1150 5025	1			BOLT
9	S150 4921	1			BOLT
10	J420 0081	1			NUT
11	5200 1141	1			HOSE, Pressure
12	5200 1140	1			HOSE, Return
13	J325 1183	3			SEAL
14	J315 5600	1			CLAMP
15	5200 1142	1			CLIP
16	5300 0970	1			SWITCH, Power Steering High Pressure
17	J417 5241	1			CLAMP
18	8350 0704	1			BRACKET

MODEL CODES
16=Cherokee 2 Dr.(1981-83)
17=Cherokee 2 Dr.(1981-83)
73=Cherokee 2WD-2 Dr.(1984-86)
74=Cherokee 2WD-4 Dr.(1984-86)
18=Cherokee 4 Dr.(1981-83)
77=Cherokee 4WD-2 Dr.(1984-86)
78=Cherokee 4WD-4 Dr.(1984-86)
85=CJ-5 (1981-83)
86=CJ-6(1981)
87=CJ-7(1981-86)
88=CJ-8, Scrambler(1981-86)
64=Comanche 2WD-6 Ft. Box(1986)
66=Comanche 2WD-7 Ft. Box(1986)
63=Comanche 4WD-6 Ft. Box(1986)
65=Comanche 4WD-7 Ft. Box(1986)
15=Grand Wagoneer 4 Dr.(1984-86)
25=J-10 Truck 7 Ft. Box(1981-84)
26=J10 Truck 8 Ft. Box(1981-86)
27=J-20 Truck 8 Ft. Box(1981-86)
15=Wagoneer 4 Dr.(1981-83)
75=Wagoneer 4WD-4 Dr.(1984-86)

BODY
CJ=CJ-5, CJ-6, CJ-7, CJ-8, Scrambler(1981-86)
MJ=Comanche Pickup(1986)

STYLES
SJ=Wagoneer(1981-83), Grand Wagoneer(1984-86), Cherokee(1981-83), J-10, J-20(1981-86)
XJ=Wagoneer(1984-86), Cherokee(1984-86)

AR = Use as Required - = Non Illustrated Part P.A.R. = Paint as Required

« RETURN TO GROUP INDEX

PUMP MOUNTING, POWER STEERING DIESEL XJ CHEROKEE, XJ WAGONEER, COMANCHE
Figure 19-6200

81J19 6200

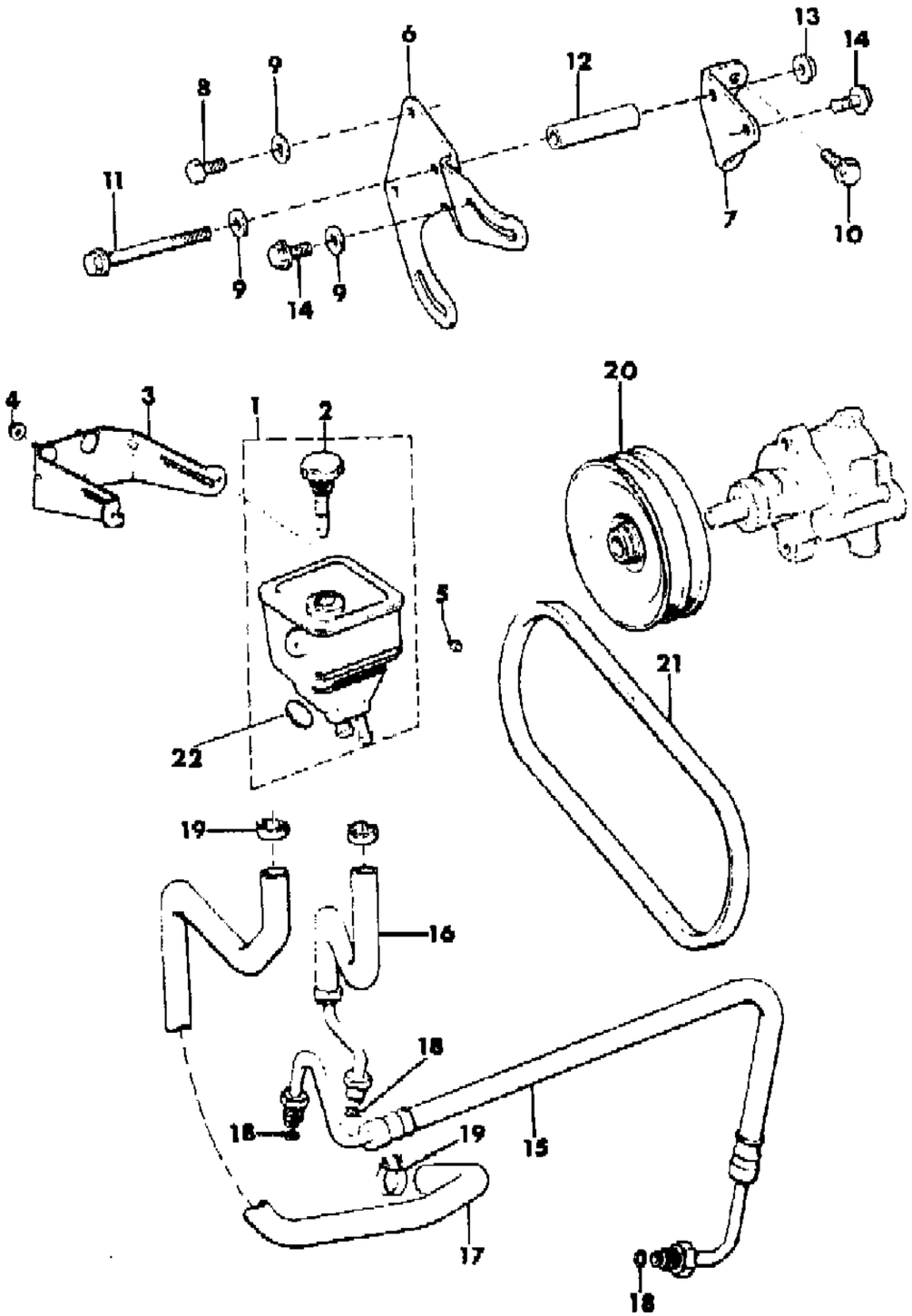

ITEM	PART NUMBER	QTY	BODY	MODEL	DESCRIPTION
1	5200 1600	1			RESERVOIR
2	5200 1781	1			CAP
3	5200 1602	1			BRACKET
4	1150 3745	3			NUT
5	1150 2843	2			BOLT
6	5300 1768	1			BRACKET
7	5300 1769	1			BRACKET
8	S150 0832	2			BOLT
9	J400 1104	5			WASHER
10	3420 1586	2			BOLT
11	T300 1695	1			BOLT
12	3420 2052	1			SPACER
13	1150 2812	1			NUT
14	3420 1540	3			BOLT
15	5200 1604	1			HOSE
16	5200 1606	1			HOSE
17	5200 1782	1			HOSE
18	J325 1183	3			SEAL
19	J320 3076	3			CLAMP
20	5300 1767	1			PULLEY, Pump
21	5300 1773	1			BELT, Power Steering Pump
22	8350 0243	1			MAGNET ***

MODEL CODES

16=Cherokee 2 Dr.(1981-83)
17=Cherokee 2 Dr.(1981-83)
73=Cherokee 2WD-2 Dr.(1984-86)
74=Cherokee 2WD-4 Dr.(1984-86)
18=Cherokee 4 Dr.(1981-83)
77=Cherokee 4WD-2 Dr.(1984-86)
78=Cherokee 4WD-4 Dr.(1984-86)
85=CJ-5 (1981-83)
86=CJ-6(1981)
87=CJ-7(1981-86)
88=CJ-8, Scrambler(1981-86)
64=Comanche 2WD-6 Ft. Box(1986)
66=Comanche 2WD-7 Ft. Box(1986)
63=Comanche 4WD-6 Ft. Box(1986)
65=Comanche 4WD-7 Ft. Box(1986)
15=Grand Wagoneer 4 Dr.(1984-86)
25=J-10 Truck 7 Ft. Box(1981-84)
26=J10 Truck 8 Ft. Box(1981-86)
27=J-20 Truck 8 Ft. Box(1981-86)
15=Wagoneer 4 Dr.(1981-83)
75=Wagoneer 4WD-4 Dr.(1984-86)

BODY
CJ=CJ-5, CJ-6, CJ-7, CJ-8, Scrambler(1981-86)
MJ=Comanche Pickup(1986)

STYLES
SJ=Wagoneer(1981-83), Grand Wagoneer(1984-86), Cherokee(1981-83), J-10, J-20(1981-86)
XJ=Wagoneer(1984-86), Cherokee(1984-86)

AR = Use as Required - = Non Illustrated Part P.A.R. = Paint as Required

« RETURN TO GROUP INDEX

PUMP MOUNTING, POWER STEERING SIX CYLINDER SJ CHEROKEE, SJ WAGONEER, J10, J20
Figure 19-6300

81J19 6300

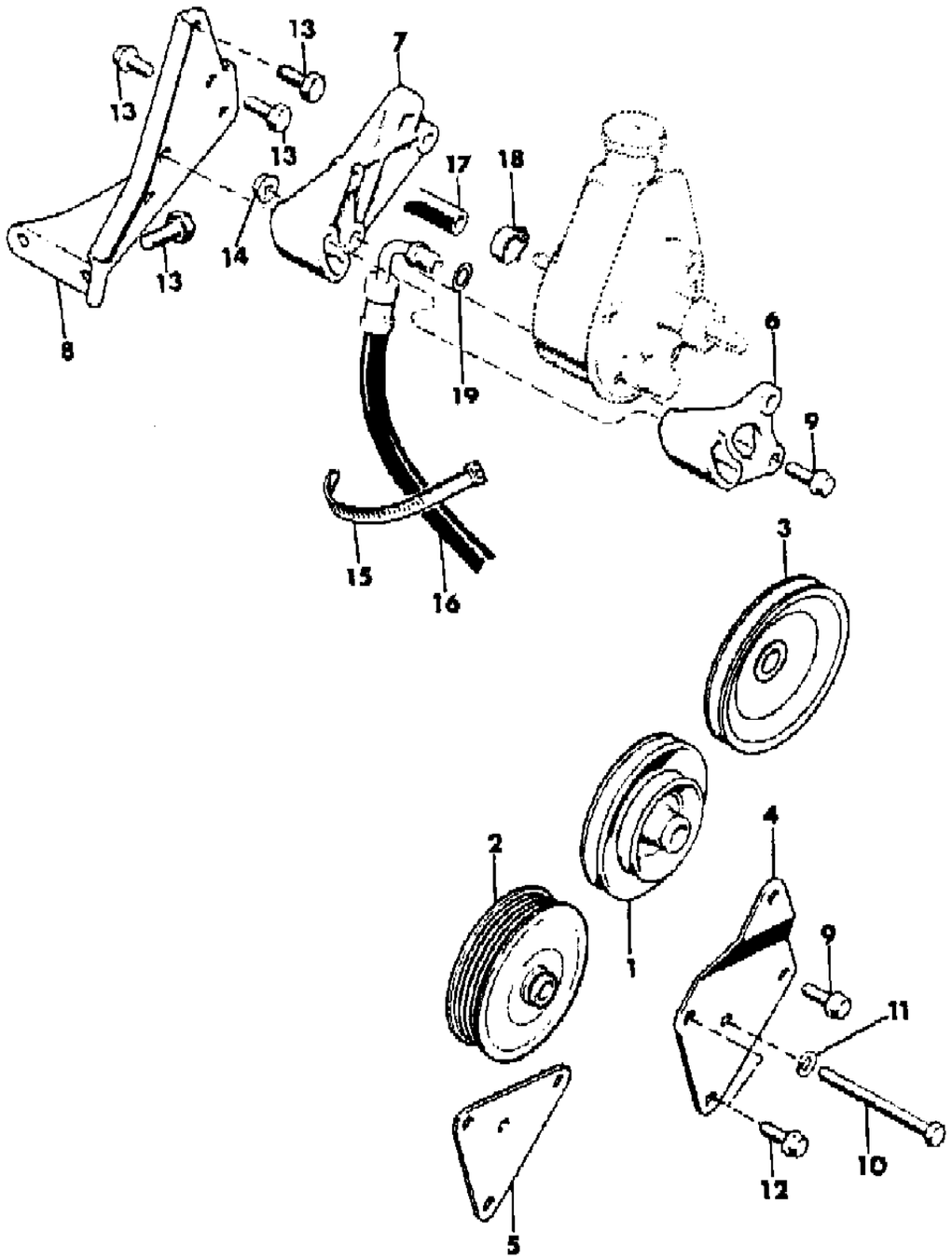

ITEM	PART NUMBER	QTY	BODY	MODEL	DESCRIPTION
1					PULLEY
	J322 6940	1			Double Pulley
2					PULLEY
	J323 8275	1			With Serpentine Belt Drive
3					PULLEY
	J322 6937	1			Single Pulley
4					BRACKET
	J323 7571	1			California
	J323 7571	1			EXPORT, Japan
5					BRACKET
	J323 7232	1			
	J323 7232	1			EXPORT, Canada, Non-Registered Markets
	J323 8264	1			EXPORT, Australian Design Rule, Economic Commission of Europe
6	J323 4993	1			BRACKET, Front Mounting
7	J323 8265	1			BRACKET, Rear Mounting
8	J323 8661	1			BRACKET, Pivot
9	1150 2606	1			BOLT
10	J018 9295	1			BOLT
11	J400 3803	1			WASHER, Lock
12					BOLT
	J027 4195	3			3/8-16x1.00"
	J400 6995	3			3/8-16x1.125"
13	J027 3773	4			BOLT
14	1150 1850	2			NUT
15	J322 3227	2			STRAP
16					HOSE, Pressure
	J537 0024	1			
	J805 0473	1			EXPORT, Right Hand Drive
17					HOSE, Return
	J537 0025	1			
	J805 0417	1			EXPORT, Right Hand Drive
18	J315 5600	1			CLAMP
19	J325 1183	1			SEAL

MODEL CODES

16=Cherokee 2 Dr.(1981-83)
17=Cherokee 2 Dr.(1981-83)
73=Cherokee 2WD-2 Dr.(1984-86)
74=Cherokee 2WD-4 Dr.(1984-86)
18=Cherokee 4 Dr.(1981-83)
77=Cherokee 4WD-2 Dr.(1984-86)
78=Cherokee 4WD-4 Dr.(1984-86)
85=CJ-5 (1981-83)
86=CJ-6(1981)
87=CJ-7(1981-86)
88=CJ-8, Scrambler(1981-86)
64=Comanche 2WD-6 Ft. Box(1986)
66=Comanche 2WD-7 Ft. Box(1986)
63=Comanche 4WD-6 Ft. Box(1986)
65=Comanche 4WD-7 Ft. Box(1986)
15=Grand Wagoneer 4 Dr.(1984-86)
25=J-10 Truck 7 Ft. Box(1981-84)
26=J10 Truck 8 Ft. Box(1981-86)
27=J-20 Truck 8 Ft. Box(1981-86)
15=Wagoneer 4 Dr.(1981-83)
75=Wagoneer 4WD-4 Dr.(1984-86)

BODY
CJ=CJ-5, CJ-6, CJ-7, CJ-8, Scrambler(1981-86)
MJ=Comanche Pickup(1986)

STYLES
SJ=Wagoneer(1981-83), Grand Wagoneer(1984-86), Cherokee(1981-83), J-10, J-20(1981-86)
XJ=Wagoneer(1984-86), Cherokee(1984-86)

AR = Use as Required - = Non Illustrated Part P.A.R. = Paint as Required

« RETURN TO GROUP INDEX

PUMP MOUNTING, POWER STEERING EIGHT CYLINDER SJ CHEROKEE, SJ WAGONEER, J10, J20
Figure 19-6400

81J19 6400

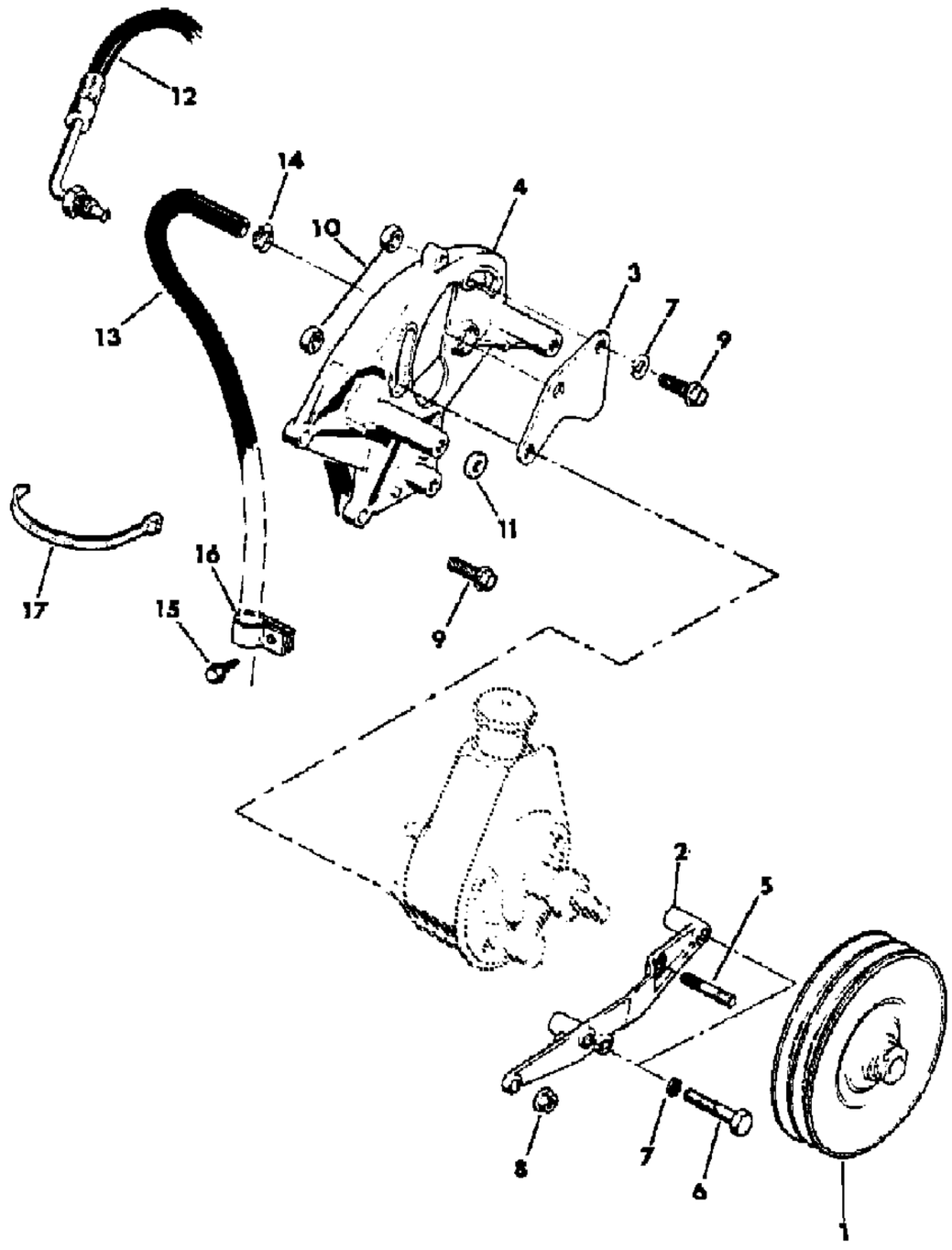

ITEM	PART NUMBER	QTY	BODY	MODEL	DESCRIPTION
1	J322 7674	1			PULLEY ,Pump
2	J323 4995	1			BRACKET
3	J323 0990	1			BRACKET
4	J323 4992	1			BRACKET
5	J420 0080	1			STUD
6	J018 0137	2			BOLT
7	J400 3803	3			WASHER
8	J400 3869	1			NUT
9					BOLT
	J400 4010	2			3/8-16x1.125"
	J018 0125	2			3/8-16x1.375"
10	J012 0377	2			NUT
11	J400 1104	1			WASHER
12					HOSE, Pressure
	J537 0022	1			1981-85
	5200 3079	1			1986
13	J537 0023	1			HOSE, Return
14	J315 5600	1			CLAMP
15	J400 4081	1			SCREW
16	1150 1940	1			CLIP
17	J322 3227	1			STRAP

MODEL CODES

16=Cherokee 2 Dr.(1981-83)
17=Cherokee 2 Dr.(1981-83)
73=Cherokee 2WD-2 Dr.(1984-86)
74=Cherokee 2WD-4 Dr.(1984-86)
18=Cherokee 4 Dr.(1981-83)
77=Cherokee 4WD-2 Dr.(1984-86)
78=Cherokee 4WD-4 Dr.(1984-86)
85=CJ-5 (1981-83)
86=CJ-6(1981)
87=CJ-7(1981-86)
88=CJ-8, Scrambler(1981-86)
64=Comanche 2WD-6 Ft. Box(1986)
66=Comanche 2WD-7 Ft. Box(1986)
63=Comanche 4WD-6 Ft. Box(1986)
65=Comanche 4WD-7 Ft. Box(1986)
15=Grand Wagoneer 4 Dr.(1984-86)
25=J-10 Truck 7 Ft. Box(1981-84)
26=J10 Truck 8 Ft. Box(1981-86)
27=J-20 Truck 8 Ft. Box(1981-86)
15=Wagoneer 4 Dr.(1981-83)
75=Wagoneer 4WD-4 Dr.(1984-86)

BODY
CJ=CJ-5, CJ-6, CJ-7, CJ-8, Scrambler(1981-86)
MJ=Comanche Pickup(1986)

STYLES
SJ=Wagoneer(1981-83), Grand Wagoneer(1984-86), Cherokee(1981-83), J-10, J-20(1981-86)
XJ=Wagoneer(1984-86), Cherokee(1984-86)

AR = Use as Required - = Non Illustrated Part P.A.R. = Paint as Required

« RETURN TO GROUP INDEX

Figure 19-6400

ILLUSTRATION NOT AVAILABLE AT TIME OF PUBLICATION

GROUP 21M - TRANSMISSION, MANUAL

ILLUSTRATION TITLE	GROUP-FIG. NO.
MANUAL TRANSMISSION ASSEMBLY TRANSFER CASE ASSEMBLY	Fig. 21M-100
TRANSMISSION CASE, EXTENSION AND MISCELLANEOUS PARTS T-176, T-177	Fig. 21M-200
GEAR TRAIN T-176, T-177	Fig. 21M-300
SHIFT FORKS, RAILS AND SHAFTS T-176, T-177	Fig. 21M-400
TRANSMISSION CASE, EXTENSION AND MISCELLANEOUS PARTS T-18	Fig. 21M-500
GEAR TRAIN T-18	Fig. 21M-600
SHIFT FORKS, RAILS AND SHAFTS T-18	Fig. 21M-700
TRANSMISSION CASE, EXTENSION AND MISCELLANEOUS PARTS SR-4	Fig. 21M-800
GEAR TRAIN SR-4	Fig. 21M-900
SHIFT FORKS, RAILS AND SHAFTS SR-4	Fig. 21M-1000
TRANSMISSION CASE, EXTENSION AND MISCELLANEOUS PARTS T-4 OR T-5	Fig. 21M-1100
GEAR TRAIN T4	Fig. 21M-1200
GEAR TRAIN T5	Fig. 21M-1300
SHIFT FORKS, RAILS, AND SHAFTS T-4 OR T-5	Fig. 21M-1400
TRANSMISSION CASE, EXTENSION AND MISCELLANEOUS PARTS AX-4 OR AX-5 WITH FOUR WHEEL DRIVE	Fig. 21M-1500
TRANSMISSION CASE, EXTENSION AND MISCELLANEOUS PARTS AX-4 OR AX-5 WITH TWO WHEEL DRIVE	Fig. 21M-1600
GEAR TRAIN FORWARD GEARS AX-4 OR AX-5	Fig. 21M-1700
GEAR TRAIN REVERSE IDLER AX-4 OR AX-5	Fig. 21M-1800
SHIFT FORKS, RAILS AND SHAFTS AX-4 OR AX-5	Fig. 21M-1900
CONTROLS, GEARSHIFT T-176 OR T-177	Fig. 21M-2000
CONTROLS, GEARSHIFT T-18	Fig. 21M-2100
CONTROLS, GEARSHIFT SR-4	Fig. 21M-2200
CONTROLS, GEARSHIFT T-4 OR T-5	Fig. 21M-2300
CONTROLS, GEARSHIFT AX-4 OR AX-5	Fig. 21M-2400
CASE, EXTENSION AND MISCELLANEOUS PARTS DANA MODEL 300 TRANSFER CASE - CJ	Fig. 21M-2500
GEAR TRAIN DANA MODEL 300	Fig. 21M-2600
SHIFT FORKS, RAILS AND SHAFTS DANA MODEL 300	Fig. 21M-2700
CASE, EXTENSION AND MISCELLANEOUS PARTS N.P.G. MODEL 207	Fig. 21M-2800
GEAR TRAIN N.P.G. MODEL 207	Fig. 21M-2900
SHIFT FORKS, RAILS AND SHAFTS N.P.G. MODEL 207	Fig. 21M-3000
CASE, EXTENSION AND MISCELLANEOUS PARTS N.P.G. MODEL 208	Fig. 21M-3100
GEAR TRAIN N.P.G. MODEL 208	Fig. 21M-3200
SHIFT FORKS, RAILS AND SHAFTS N.P.G. MODEL 208	Fig. 21M-3300
CASE, EXTENSION AND MISCELLANEOUS PARTS N.P.G. MODEL 219	Fig. 21M-3400
GEAR TRAIN N.P.G. MODEL 219	Fig. 21M-3500
SHIFT FORKS, RAILS AND SHAFTS N.P.G. MODEL 219	Fig. 21M-3600
CASE, EXTENSION AND MISCELLANEOUS PARTS N.P.G. MODEL 228 OR 229	Fig. 21M-3700

ILLUSTRATION TITLE **GROUP-FIG. NO.**

SUSPENSION, REAR (Continued)

CASE, EXTENSION AND MISCELLANEOUS PARTS N.P.G. MODEL 228 OR 229 . . . . . Fig. 21M-3700
GEAR TRAIN N.P.G. MODEL 228 OR 229 . . . . . Fig. 21M-3800
SHIFT FORKS, RAILS AND SHAFTS N.P.G. MODEL 228 OR 229 . . . . . Fig. 21M-3900
CONTROLS TRANSFER CASE SHIFT DANA MODEL 300 TRANSFER CASE CJ-5,6,7,8, SCRAMBLER . . . . Fig. 21M-4000
CONTROLS TRANSFER CASE SHIFT 1984-85 XJ WITH N.P.G. 207 WITH DISCONNECT FRONT AXLE, AX-4, AX-5 MANUAL TRANSMISSION . . . . . Fig. 21M-4100
CONTROLS, TRANSFER CASE SHIFT 1985 XJ WITH N.P.G. 207, WITH DISCONNECT FRONT AXLE, T-4, T-5 MANUAL TRANSMISSION . . . . . Fig. 21M-4200
CONTROLS, TRANSFER CASE SHIFT 1984-85 XJ WITH N.P.G. 207, WITH DISCONNECT FRONT AXLE, WITH AUTOMATIC TRANSMISSION . . . . . Fig. 21M-4300
CONTROLS, TRANSFER CASE SHIFT 1986 - XJ, MJ WITH N.P.G. 207 . . . . . Fig. 21M-4400
CONTROLS, TRANSFER CASE SHIFT 1984-85 XJ WITH N.P.G. 229 AND DISCONNECT FRONT AXLE . . . Fig. 21M-4500
CONTROLS, TRANSFER CASE SHIFT 1984-86 XJ, MJ WITH N.P.G. 228 OR 229 WITHOUT DISCONNECT FRONT AXLE . . . . . Fig. 21M-4600
CONTROLS, TRANSFER CASE SHIFT SJ WITH N.P.G. 208 MANUAL TRANSMISSION . . . . . Fig. 21M-4700
CONTROLS, TRANSFER CASE SHIFT LEVER SJ WITH AUTOMATIC TRANSMISSION . . . . . Fig. 21M-4800
CONTROLS, TRANSFER CASE VACUUM SHIFT 1982-84 SJ WITH N.P.G. 229 AUTOMATIC TRANSMISSION . . . . . Fig. 21M-4900
CONTROLS, TRANSFER CASE VACUUM SHIFT 1985-86 SJ WITH N.P.G. 229 AUTOMATIC TRANSMISSION . . . . . Fig. 21M-5000
CABLE, SPEEDOMETER AND PINION MANUAL TRANSMISSION CJ-5,6,7,8, SCRAMBLER . . . . . Fig. 21M-5100
CABLE, SPEEDOMETER AND PINION XJ CHEROKEE, XJ WAGONEER COMANCHE . . . . . Fig. 21M-5200
CABLE, SPEEDOMETER AND PINION ALL TRANSMISSIONS SJ CHEROKEE, SJ WAGONEER, J10, J20 . . Fig. 21M-5300

MANUAL TRANSMISSION ASSEMBLY TRANSFER CASE ASSEMBLY
Figure 21M-100

81J21 100

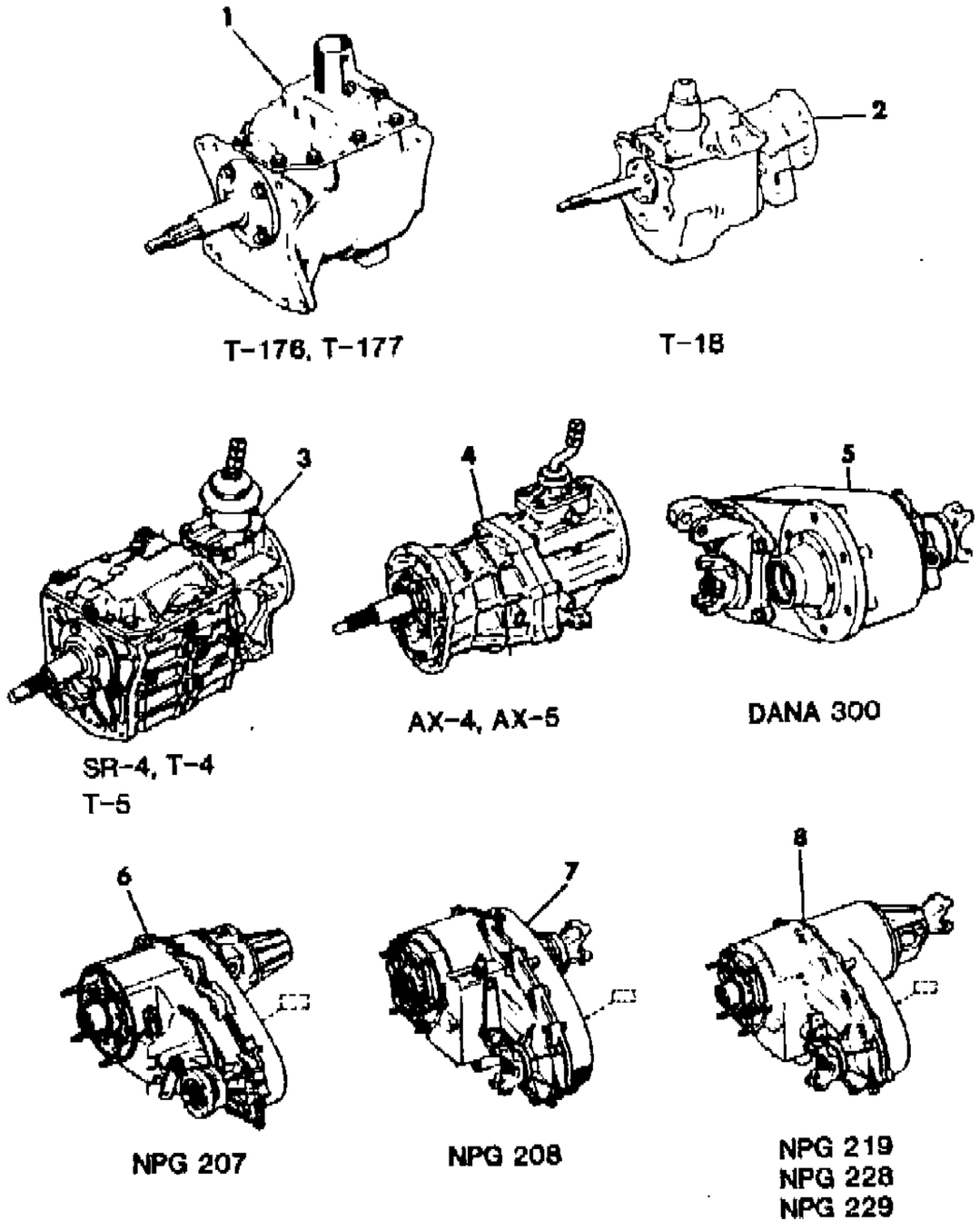

ITEM	PART NUMBER	QTY	BODY	MODEL	DESCRIPTION
1					TRANSMISSION ASSEMBLY, T-176, T-177
			CJ		
	J535 9390	1			1981: Model T-176, EXPORT, Non-Regulated Markets
	J535 9389	1			1981-86: Model T-177
			SJ		
	J536 2086	1			1981-86: T-176, 5.9L Eight Cylinder
	J535 9389	1			1981-86: T-177, 4.2L Six Cylinder
	J535 9390	1			1981: T-176, 4.2L Six Cylinder, EXPORT, Non-Regulated Markets
	J535 9391	1			1981: T-176, 5.9L Eight Cylinder, EXPORT, Non-Regulated Markets
2			SJ		TRANSMISSION ASSEMBLY, T-18
	J535 9569	1			1981-86: 4.2L Six Cylinder
	J535 9568	1			1981-86: 5.9L Eight Cylinder
3			CJ		TRANSMISSION ASSEMBLY, Manual
					2.5L Four Cylinder
	J323 9675	1			1981: SR-4
	J536 0956	1			1981: SR-4, EXPORT, Non-Regulated Markets
	J324 1440	1			1982-83: T-4
	J324 0556	1			1982-83: T-4, EXPORT, Right Hand Drive
	5300 1097	1			1983: T-4
	5300 1337	1			1984: T-4
	5300 1504	1			1984: T-4, EXPORT
	5300 1505	1			1984: T-4, EXPORT, Right Hand Drive
	5300 1941	1			1985-86: T-4
	5300 1942	1			1985-86: T-4, EXPORT, Right Hand Drive
	5300 1943	1			1985-86: T-4, EXPORT
	J324 1886	1			1982-83: T-5, With 3.54 Axle Ratio
	J324 1888	1			1982-83: T-5, With 4.09 Axle Ratio
	J324 1887	1			1982-83: T-5, EXPORT, Right Hand Drive
	5300 1098	1			1983: T-5, With 3.54 Axle Ratio
	5300 1508	1			1984: T-5
	5300 1509	1			1984: T-5, EXPORT, Right Hand Drive
	5300 2518	1			1985-86: T-5
					4.2L Six Cylinder
	J323 9675	1			1981: SR-4
	J536 0957	1			1981: SR-4, EXPORT, Non-Regulated Markets
	J324 1440	1			1982-83: T-4
	J324 0556	1			1982-83: T-4, EXPORT, Right Hand Drive

MODEL CODES
16=Cherokee 2 Dr.(1981-83)
17=Cherokee 2 Dr.(1981-83)
73=Cherokee 2WD-2 Dr.(1984-86)
74=Cherokee 2WD-4 Dr.(1984-86)
18=Cherokee 4 Dr.(1981-83)
77=Cherokee 4WD-2 Dr.(1984-86)
78=Cherokee 4WD-4 Dr.(1984-86)
85=CJ-5 (1981-83)
86=CJ-6(1981)
87=CJ-7(1981-86)
88=CJ-8, Scrambler(1981-86)
64=Comanche 2WD-6 Ft. Box(1986)
66=Comanche 2WD-7 Ft. Box(1986)
63=Comanche 4WD-6 Ft. Box(1986)
65=Comanche 4WD-7 Ft. Box(1986)
15=Grand Wagoneer 4 Dr.(1984-86)
25=J-10 Truck 7 Ft. Box(1981-84)
26=J10 Truck 8 Ft. Box(1981-86)
27=J-20 Truck 8 Ft. Box(1981-86)
15=Wagoneer 4 Dr.(1981-83)
75=Wagoneer 4WD-4 Dr.(1984-86)

BODY
CJ=CJ-5, CJ-6, CJ-7, CJ-8, Scrambler(1981-86)
MJ=Comanche Pickup(1986)

STYLES
SJ=Wagoneer(1981-83), Grand Wagoneer(1984-86), Cherokee(1981-83), J-10, J-20(1981-86)
XJ=Wagoneer(1984-86), Cherokee(1984-86)

AR = Use as Required - = Non Illustrated Part P.A.R. = Paint as Required

MANUAL TRANSMISSION ASSEMBLY TRANSFER CASE ASSEMBLY
Figure 21M-100

81J21 100

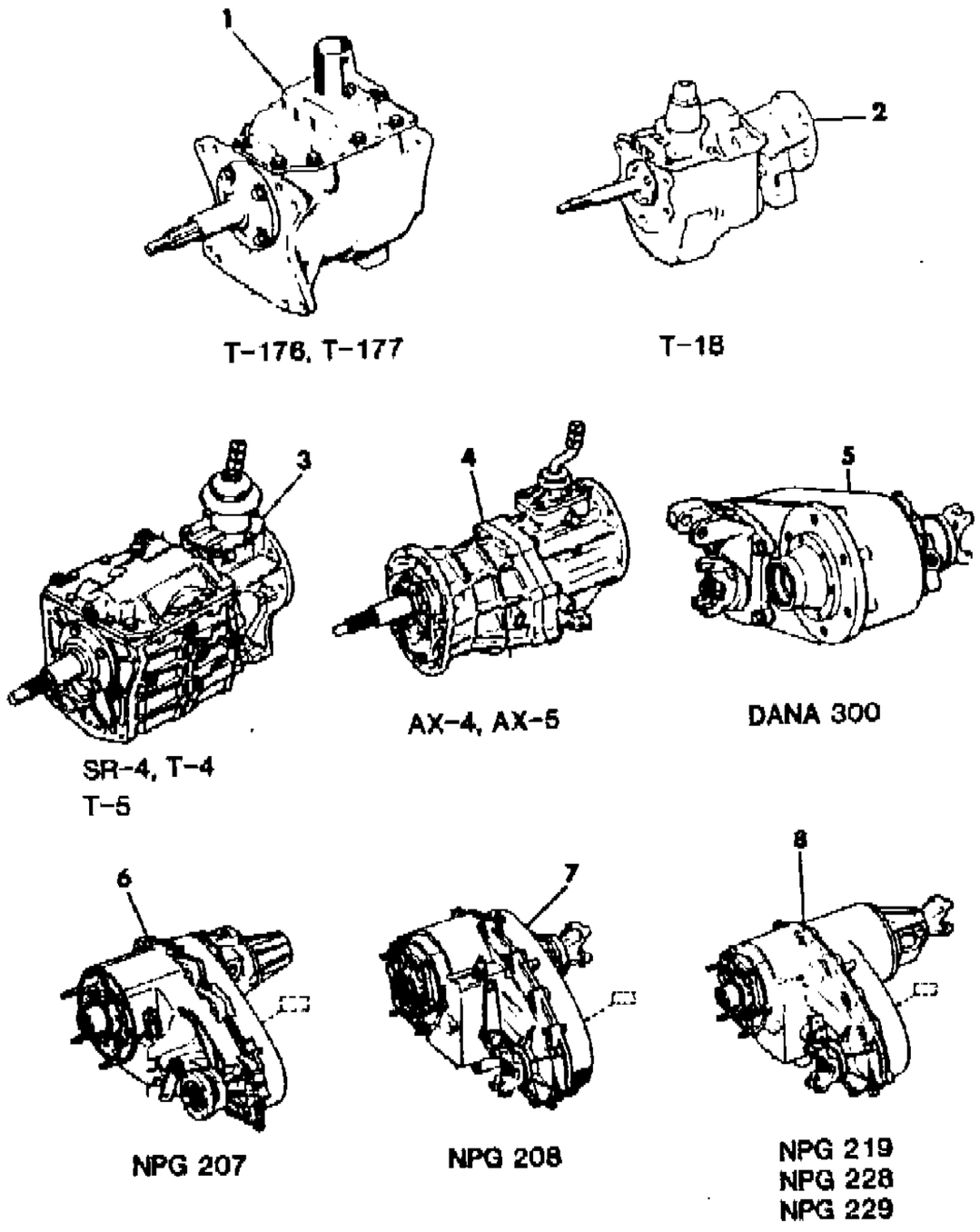

ITEM	PART NUMBER	QTY	BODY	MODEL	DESCRIPTION
	5300 1502	1			1984: T-4, EXPORT, Right Hand Drive
	5300 1503	1			1984: T-4
	5300 1940	1			1985-86: T-4
	5300 1939	1			1985-86: T-4, EXPORT, Right Hand Drive
	J324 1888	1			1982-83: T-5
	J324 1887	1			1982-83: T-5, EXPORT, Right Hand Drive
	5300 1507	1			1984: T-5
	5300 1506	1			1984: T-5, EXPORT, Right Hand Drive
	5300 1945	1			1985-86: T-5, EXPORT
	5300 1944	1			1985-86: T-5, EXPORT, Right Hand Drive
	5300 2518	1			1985-86: T-5
					Diesel
	J324 2160	1			1983: T-4, EXPORT - France, Belgium
	J324 1864	1			1983: T-5, EXPORT - France, Belgium
			XJ		TRANSMISSION ASSEMBLY, Manual
	5300 2269	1			1984-85: T-4, With System Sentry
	5300 1547	1			1984: T-4, With System Sentry
	5300 1548	1			1985: T-4, Without System Sentry
	5300 1551	1			1984: T-5, Without System Sentry
	5300 1552	1			1984: T-5, Without System Sentry
	5300 2270	1			1984-85: T-5, With System Sentry
			SJ		TRANSMISSION ASSEMBLY, Manual
	J324 1888	1			1982-1983: T-5
4			XJ,MJ		TRANSMISSION ASSEMBLY, Manual
					AX4
	5300 1565	1			1984: With System Sentry
	5300 2264	1			1985: With System Sentry
	5300 1670	1			1985-86: 2WD With System Sentry
	5300 4250	1			1986: 2WD
	5300 4249	1			1986: 4WD
	5300 2264	1			1986: 4WD
					AX5
	5300 1566	1			1984: With System Sentry
	5300 1671	1			1985-86: 2.5L Four or 2.8L Six Cylinder, 2WD, With System Sentry
	5300 3386	1			1986: 2.5L Four or 2.8L Six Cylinder, 2WD
	5300 2265	1			1985-86: 2.5L Four or 2.8L Six Cylinder, 4WD, With System Sentry
	5300 3385	1			1986: 2.5L Four Cylinder, 4WD

MODEL CODES

16=Cherokee 2 Dr.(1981-83)
17=Cherokee 2 Dr.(1981-83)
73=Cherokee 2WD-2 Dr.(1984-86)
74=Cherokee 2WD-4 Dr.(1984-86)
18=Cherokee 4 Dr.(1981-83)
77=Cherokee 4WD-2 Dr.(1984-86)
78=Cherokee 4WD-4 Dr.(1984-86)
85=CJ-5 (1981-83)
86=CJ-6(1981)
87=CJ-7(1981-86)
88=CJ-8, Scrambler(1981-86)
64=Comanche 2WD-6 Ft. Box(1986)
66=Comanche 2WD-7 Ft. Box(1986)
63=Comanche 4WD-6 Ft. Box(1986)
65=Comanche 4WD-7 Ft. Box(1986)
15=Grand Wagoneer 4 Dr.(1984-86)
25=J-10 Truck 7 Ft. Box(1981-84)
26=J10 Truck 8 Ft. Box(1981-86)
27=J-20 Truck 8 Ft. Box(1981-86)
15=Wagoneer 4 Dr.(1981-83)
75=Wagoneer 4WD-4 Dr.(1984-86)

BODY
CJ=CJ-5, CJ-6, CJ-7, CJ-8, Scrambler(1981-86)
MJ=Comanche Pickup(1986)

STYLES
SJ=Wagoneer(1981-83), Grand Wagoneer(1984-86), Cherokee(1981-83), J-10, J-20(1981-86)
XJ=Wagoneer(1984-86), Cherokee(1984-86)

AR = Use as Required - = Non Illustrated Part P.A.R. = Paint as Required

MANUAL TRANSMISSION ASSEMBLY TRANSFER CASE ASSEMBLY
Figure 21M-100

81J21 100

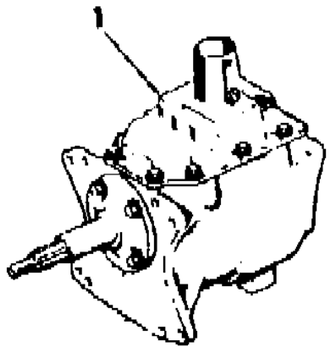

T-176, T-177

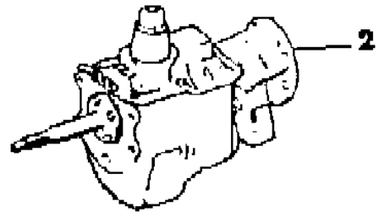

T-18

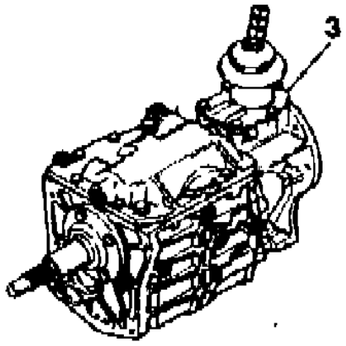

SR-4, T-4
T-5

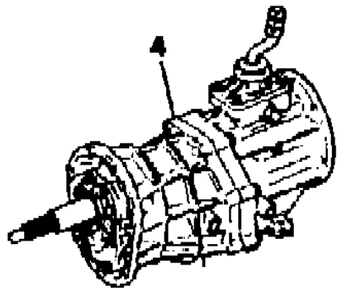

AX-4, AX-5

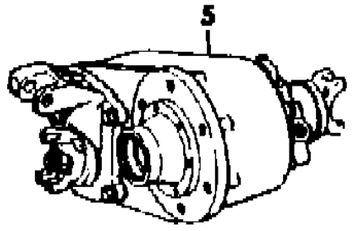

DANA 300

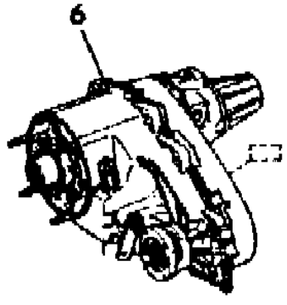

NPG 207

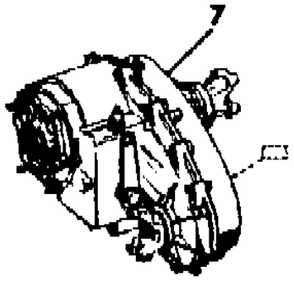

NPG 208

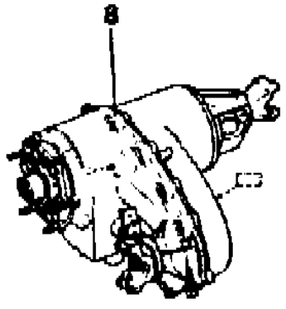

NPG 219
NPG 228
NPG 229

ITEM	PART NUMBER	QTY	BODY	MODEL	DESCRIPTION
	5300 1190	1			1985: Diesel, 4WD, With System Sentry
	5300 3388	1			1986: Diesel, 2WD
	5300 3387	1			1986: Diesel, 4WD
5			CJ		TRANSFER CASE ASSEMBLY, Dana Model 300
	J536 4854	1			1981-86: Tagged 5361994 or 5364845
6			XJ,MJ		TRANSFER CASE, ASSEMBLY, NPG Model 207
	5300 0154	1			1984-85: Tagged 8953000154
	5300 0154	1			1984-85: Tagged 8953000421
	5300 0154	1			1984-85: Tagged 8953000533
	5300 1224	1			1984-85: Tagged 8953001224
	5300 1224	1			1984-85: Tagged 8953001221
	5300 1520	1			1984-85: Tagged 8953001520
	5300 1521	1			1984-85: Tagged 8953001521
	5300 3735	1			1986: Tagged 8953003735
	5300 3735	1			1986: Tagged 8953003559
	5300 3738	1			1986: Tagged 8953003738
	5300 3738	1			1986: Tagged 8953003390
7			SJ		TRANSFER CASE ASSEMBLY, NPG Model 208
	3300 1383	1			1981-86: Tagged 5359842
	3300 1384	1			1981-86: Tagged 5361334
	3300 1385	1			1981-86: Tagged 5361528
	J324 1865	1			1981-86: Tagged 3241865
	3300 1383	1			1981-86: Tagged 8933001383
	3300 1384	1			1981-86: Tagged 8933001384
	3300 1385	1			1981-86: Tagged 8933001385
	3300 1386	1			1981-86: Tagged 8933001386
8					TRANSFER CASE ASSEMBLY
			SJ		NPG Model 219
	5300 1346	1			1981-82: Tagged 5359846
	5300 1346	1			1981-82: Tagged 8953001346
					NPG Model 228
	5300 4882	1	SJ		1986: Tagged 8953003970
	5300 2403	1	XJ,MJ		1986: Tagged 8953002403
	5300 2403	1	XJ,MJ		1986: Tagged 8953002391
					NPG Model 229
	5300 4882	1	SJ		1982-85: Tagged 5363353
	5300 0153	1	XJ		1984-85: Tagged 8953000153
	5300 1233	1	XJ		1984-85: Tagged 8953001233
	5300 0153	1	XJ		1984-85: Tagged 8953000534

MODEL CODES
16=Cherokee 2 Dr.(1981-83)
17=Cherokee 2 Dr.(1981-83)
73=Cherokee 2WD-2 Dr.(1984-86)
74=Cherokee 2WD-4 Dr.(1984-86)
18=Cherokee 4 Dr.(1981-83)
77=Cherokee 4WD-2 Dr.(1984-86)
78=Cherokee 4WD-4 Dr.(1984-86)
85=CJ-5 (1981-83)
86=CJ-6(1981)
87=CJ-7(1981-86)
88=CJ-8, Scrambler(1981-86)
64=Comanche 2WD-6 Ft. Box(1986)
66=Comanche 2WD-7 Ft. Box(1986)
63=Comanche 4WD-6 Ft. Box(1986)
65=Comanche 4WD-7 Ft. Box(1986)
15=Grand Wagoneer 4 Dr.(1984-86)
25=J-10 Truck 7 Ft. Box(1981-84)
26=J10 Truck 8 Ft. Box(1981-86)
27=J-20 Truck 8 Ft. Box(1981-86)
15=Wagoneer 4 Dr.(1981-83)
75=Wagoneer 4WD-4 Dr.(1984-86)

BODY
CJ=CJ-5, CJ-6, CJ-7, CJ-8, Scrambler(1981-86)
MJ=Comanche Pickup(1986)

STYLES
SJ=Wagoneer(1981-83), Grand Wagoneer(1984-86), Cherokee(1981-83), J-10, J-20(1981-86)
XJ=Wagoneer(1984-86), Cherokee(1984-86)

AR = Use as Required - = Non Illustrated Part P.A.R. = Paint as Required

TRANSMISSION CASE, EXTENSION AND MISCELLANEOUS PARTS T-176, T-177
Figure 21M-200

81J21 200

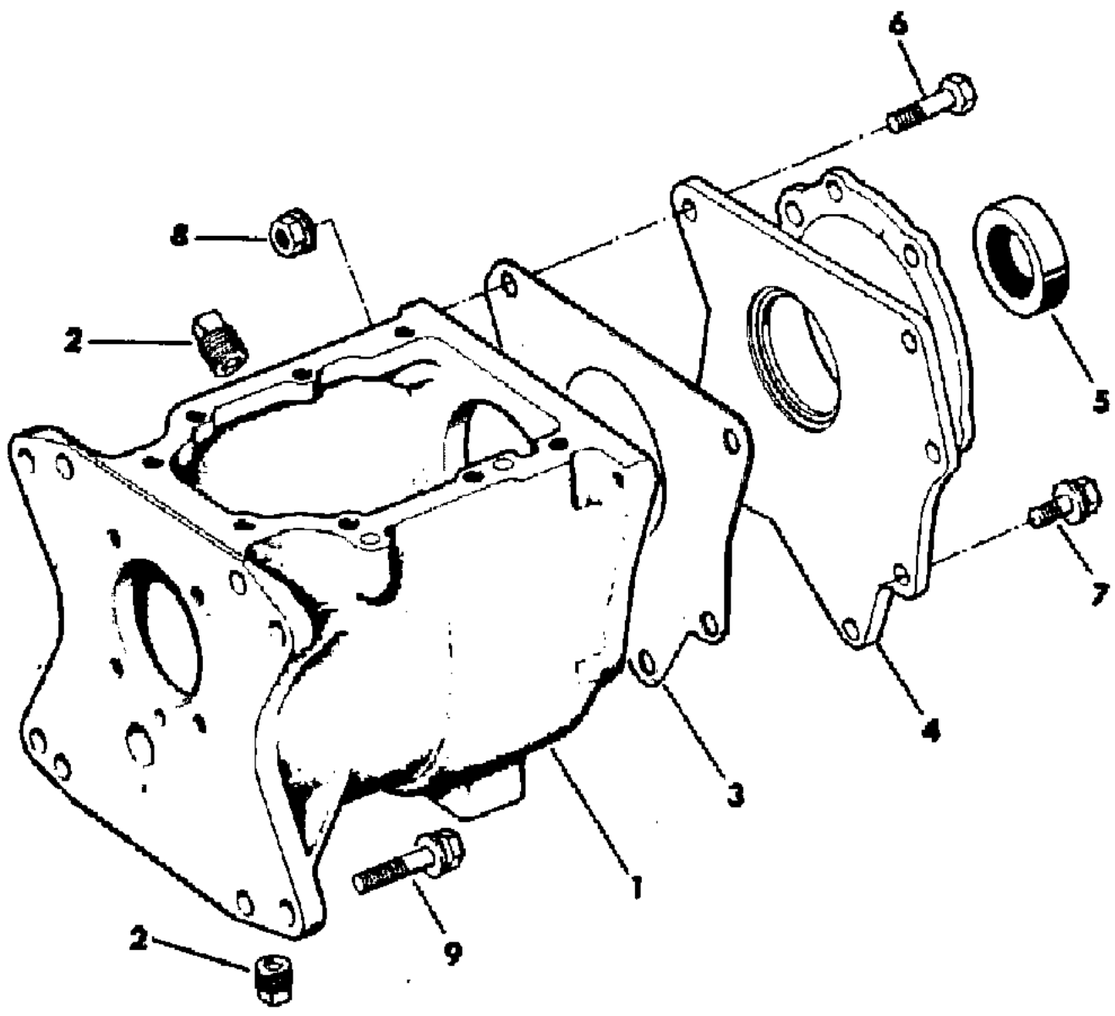

ITEM	PART NUMBER	QTY	BODY	MODEL	DESCRIPTION
1	J813 2375	1			CASE, Transmission
2	J812 9343	2			PLUG, Drain
3	J535 9411	1			GASKET, Adapter Case
4	J535 9381	1			ADAPTER
5	J535 9457	1			SEAL
6	J018 0137	3			BOLT
7	J400 1884	2			BOLT
8	J400 4747	3			NUT
9	S018 0147	4			BOLT

MODEL CODES

16=Cherokee 2 Dr.(1981-83)
17=Cherokee 2 Dr.(1981-83)
73=Cherokee 2WD-2 Dr.(1984-86)
74=Cherokee 2WD-4 Dr.(1984-86)
18=Cherokee 4 Dr.(1981-83)
77=Cherokee 4WD-2 Dr.(1984-86)
78=Cherokee 4WD-4 Dr.(1984-86)
85=CJ-5 (1981-83)
86=CJ-6(1981)
87=CJ-7(1981-86)
88=CJ-8, Scrambler(1981-86)
64=Comanche 2WD-6 Ft. Box(1986)
66=Comanche 2WD-7 Ft. Box(1986)
63=Comanche 4WD-6 Ft. Box(1986)
65=Comanche 4WD-7 Ft. Box(1986)
15=Grand Wagoneer 4 Dr.(1984-86)
25=J-10 Truck 7 Ft. Box(1981-84)
26=J10 Truck 8 Ft. Box(1981-86)
27=J-20 Truck 8 Ft. Box(1981-86)
15=Wagoneer 4 Dr.(1981-83)
75=Wagoneer 4WD-4 Dr.(1984-86)

BODY
CJ=CJ-5, CJ-6, CJ-7, CJ-8, Scrambler(1981-86)
MJ=Comanche Pickup(1986)

STYLES
SJ=Wagoneer(1981-83), Grand Wagoneer(1984-86), Cherokee(1981-83), J-10, J-20(1981-86)
XJ=Wagoneer(1984-86), Cherokee(1984-86)

AR = Use as Required - = Non Illustrated Part P.A.R. = Paint as Required

« RETURN TO GROUP INDEX

GEAR TRAIN T-176, T-177
Figure 21M-300

81J21 300B

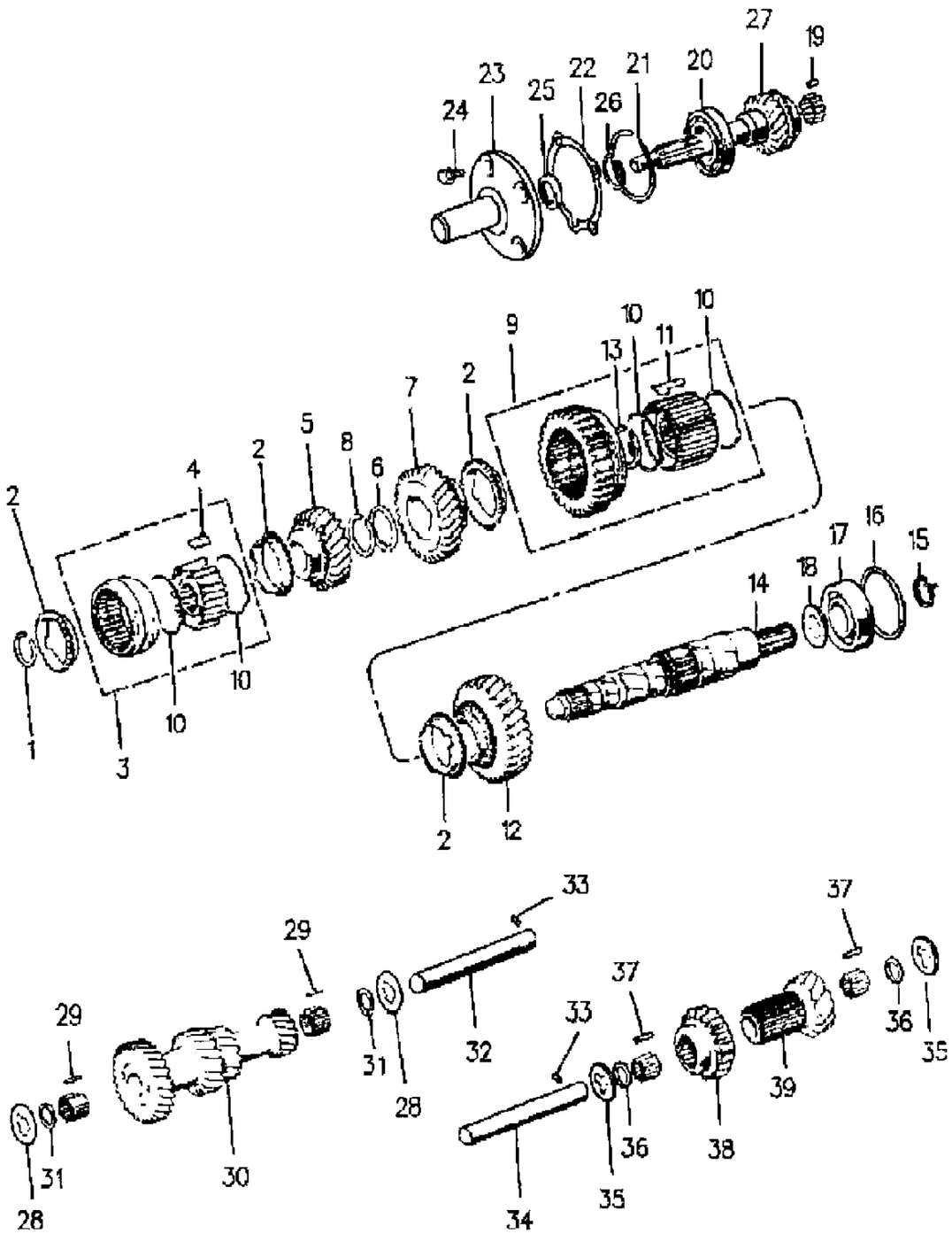

ITEM	PART NUMBER	QTY	BODY	MODEL	DESCRIPTION
1	J812 4930	1			RING, Snap
2	8330 0046	4			RING, Blocking
3	8350 4095	1			SYNCHRONIZER, 3rd & 4th Gear
4	J812 4895	3			KEY, Synchronizer
5					GEAR, Third
	J813 2429	1			With Transmission 5359389
	J813 2379	1			w/Transmission 5359390, 5362086
	J813 2380	1			w/Transmission 5359391
6	J812 4936	1			WASHER, Thrust
7					GEAR, Second
	J813 2384	1			With Transmission 5359389 (32 Teeth)
	J813 2382	1			With Transmission 5362086, 5359390, (33 Teeth)
	J813 2383	1			With Transmission 5359391 (34 Teeth)
8	J813 2385	1			RING, Snap
9	8350 4096	1			SYNCHRONIZER, 1st & 2nd Gear
10	J813 2377	4			SPRING
11	J813 2387	3			KEY, Synchronizer
12	J813 2389	1			GEAR, First Speed
13	J813 2388	1			RING, Snap
14	J813 2374	1			MAINSHAFT
15	J812 4883	1			RING, Snap
16	J813 2430	1			RING, Locking
17	J813 6623	1			BEARING, Rear
18	J813 2390	1			WASHER, Thrust
19	J812 4929	15			ROLLER
20	J813 2426	1			BEARING, Front
21	J813 2425	1			RING, Locking
22	J813 2423	1			GASKET
23					CAP, Bearing
	J813 2372	1			w/Transmission, 5359389, 5359390
	J813 2373	1			w/Transmission, 5362086, 5359391
24	J813 2424	4			BOLT
25	8330 0041	1			SEAL
26	J813 2427	1			RING, Snap
27					SHAFT, Input
	J813 2401	1			w/Transmission, 5359389
	J813 3434	1			w/Transmission, 5362086
	J813 2370	1			w/Transmission, 5359391
	J813 2369	1			w/Transmission, 5359390

MODEL CODES

16=Cherokee 2 Dr.(1981-83)
17=Cherokee 2 Dr.(1981-83)
73=Cherokee 2WD-2 Dr.(1984-86)
74=Cherokee 2WD-4 Dr.(1984-86)
18=Cherokee 4 Dr.(1981-83)
77=Cherokee 4WD-2 Dr.(1984-86)
78=Cherokee 4WD-4 Dr.(1984-86)
85=CJ-5 (1981-83)
86=CJ-6(1981)
87=CJ-7(1981-86)
88=CJ-8, Scrambler(1981-86)
64=Comanche 2WD-6 Ft. Box(1986)
66=Comanche 2WD-7 Ft. Box(1986)
63=Comanche 4WD-6 Ft. Box(1986)
65=Comanche 4WD-7 Ft. Box(1986)
15=Grand Wagoneer 4 Dr.(1984-86)
25=J-10 Truck 7 Ft. Box(1981-84)
26=J10 Truck 8 Ft. Box(1981-86)
27=J-20 Truck 8 Ft. Box(1981-86)
15=Wagoneer 4 Dr.(1981-83)
75=Wagoneer 4WD-4 Dr.(1984-86)

BODY
CJ=CJ-5, CJ-6, CJ-7, CJ-8, Scrambler(1981-86)
MJ=Comanche Pickup(1986)

STYLES
SJ=Wagoneer(1981-83), Grand Wagoneer(1984-86), Cherokee(1981-83), J-10, J-20(1981-86)
XJ=Wagoneer(1984-86), Cherokee(1984-86)

AR = Use as Required - = Non Illustrated Part P.A.R. = Paint as Required

« RETURN TO GROUP INDEX »

GEAR TRAIN T-176, T-177
Figure 21M-300

81J21 300B

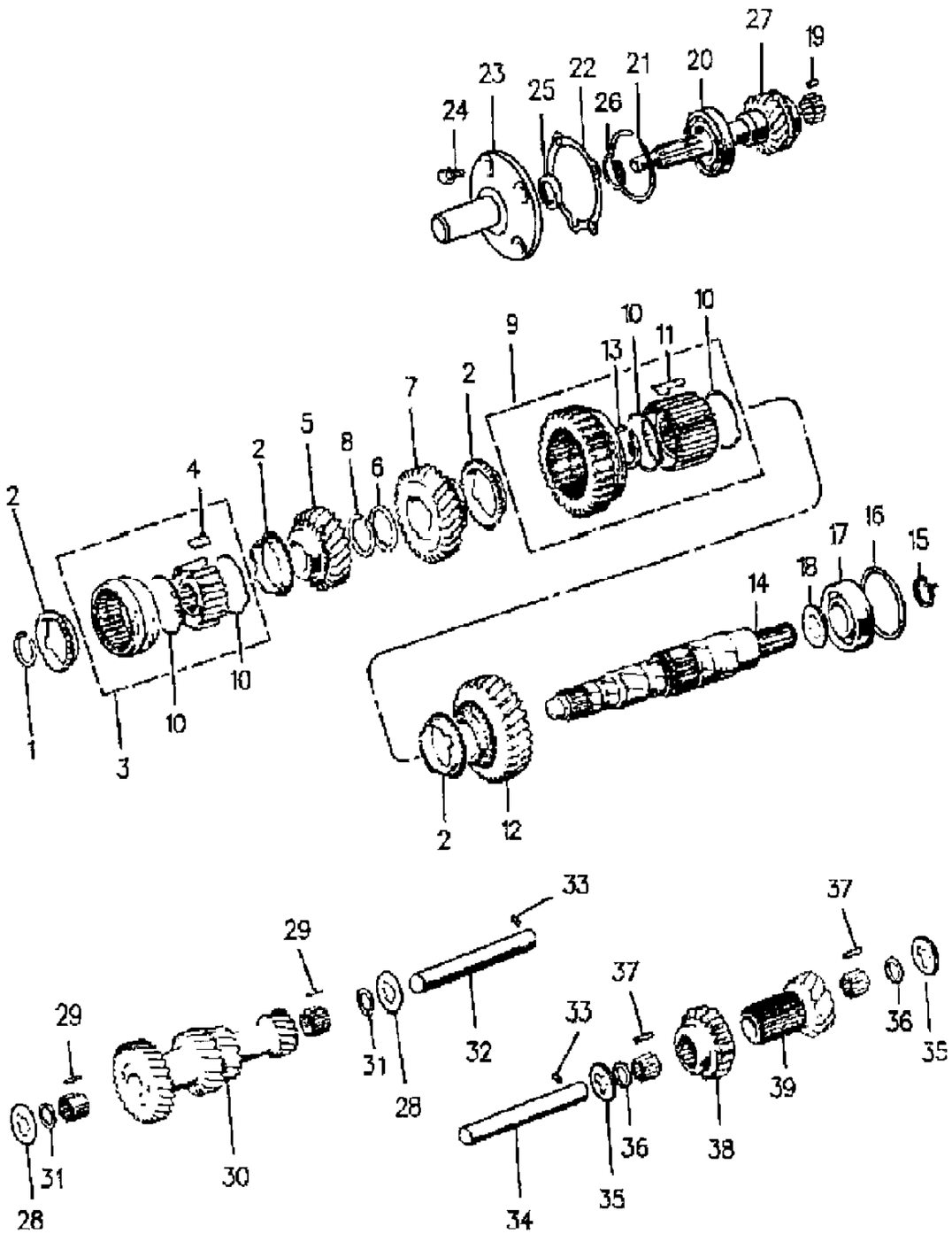

ITEM	PART NUMBER	QTY	BODY	MODEL	DESCRIPTION
28					WASHER
	J813 2396	2			w/Transmission, 5359389,5359390,5359391
	J813 3435	2			w/Transmission, 5362086
29	J813 2394	42			ROLLER
30					GEAR, Cluster
	J813 2393	1			With Transmission 5359389
	J813 2391	1			With Transmission 5362086 or 5359390
	J813 2392	1			With Transmission 5359390
31	J813 2395	1			WASHER
32	J813 2397	1			SHAFT
33	J812 4931	2			PIN
34	J813 2398	1			SHAFT
35	J813 2405	2			WASHER, Thrust
36	J813 2404	2			WASHER, Flat
37	J813 2403	44			ROLLER
38	J813 2402	1			GEAR, Reverse
39	J813 2399	1			GEAR, Reverse Idler

MODEL CODES

16=Cherokee 2 Dr.(1981-83)
17=Cherokee 2 Dr.(1981-83)
73=Cherokee 2WD-2 Dr.(1984-86)
74=Cherokee 2WD-4 Dr.(1984-86)
18=Cherokee 4 Dr.(1981-83)
77=Cherokee 4WD-2 Dr.(1984-86)
78=Cherokee 4WD-4 Dr.(1984-86)
85=CJ-5 (1981-83)
86=CJ-6(1981)
87=CJ-7(1981-86)
88=CJ-8, Scrambler(1981-86)
64=Comanche 2WD-6 Ft. Box(1986)
66=Comanche 2WD-7 Ft. Box(1986)
63=Comanche 4WD-6 Ft. Box(1986)
65=Comanche 4WD-7 Ft. Box(1986)
15=Grand Wagoneer 4 Dr.(1984-86)
25=J-10 Truck 7 Ft. Box(1981-84)
26=J10 Truck 8 Ft. Box(1981-86)
27=J-20 Truck 8 Ft. Box(1981-86)
15=Wagoneer 4 Dr.(1981-83)
75=Wagoneer 4WD-4 Dr.(1984-86)

BODY
CJ=CJ-5, CJ-6, CJ-7, CJ-8, Scrambler(1981-86)
MJ=Comanche Pickup(1986)

STYLES
SJ=Wagoneer(1981-83), Grand Wagoneer(1984-86), Cherokee(1981-83), J-10, J-20(1981-86)
XJ=Wagoneer(1984-86), Cherokee(1984-86)

AR = Use as Required - = Non Illustrated Part P.A.R. = Paint as Required

« RETURN TO GROUP INDEX

SHIFT FORKS, RAILS AND SHAFTS T-176, T-177
Figure 21M-400

81J21 400

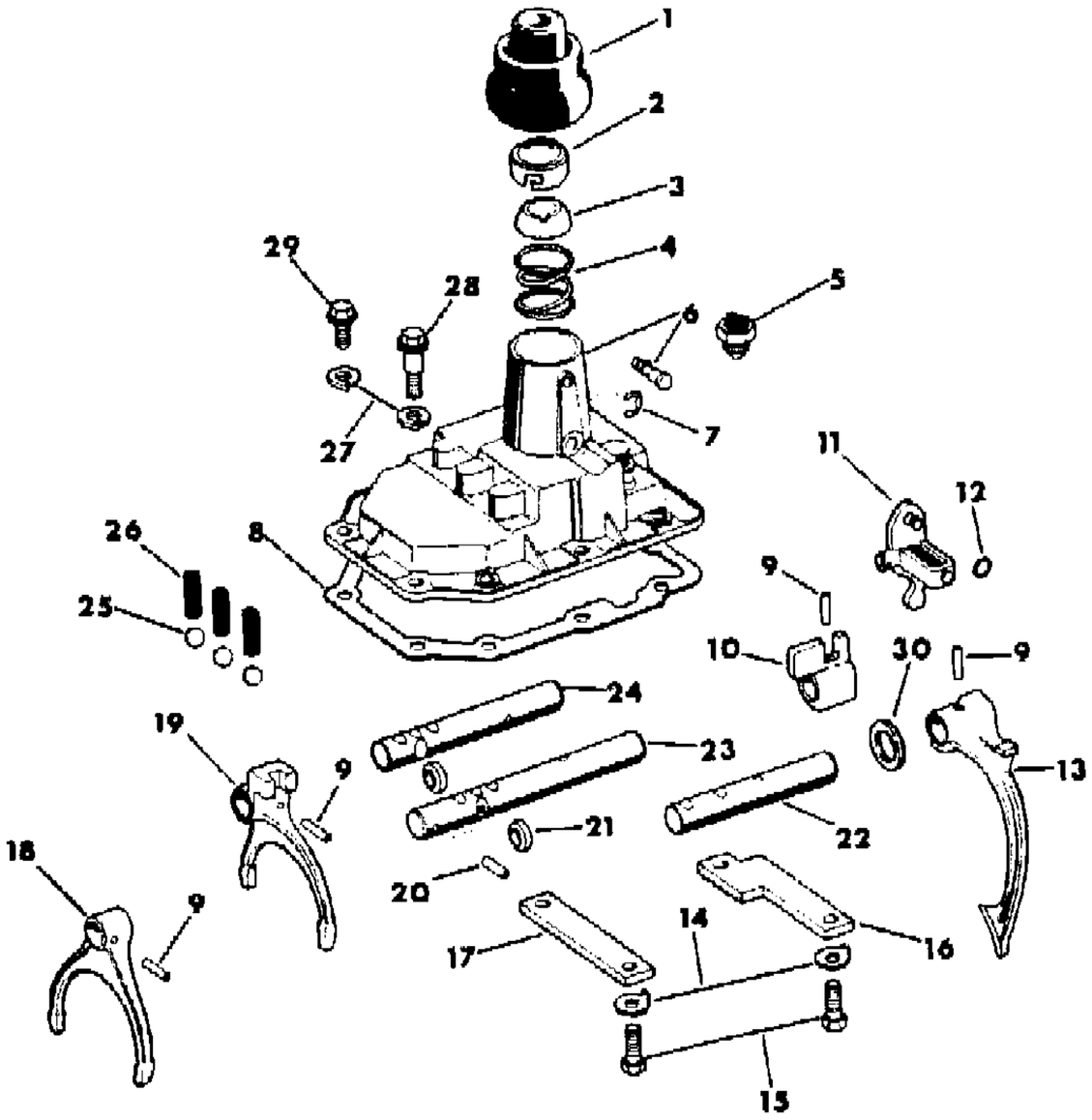

ITEM	PART NUMBER	QTY	BODY	MODEL	DESCRIPTION
1	J813 2422	1			BOOT
2	J813 2421	1			CAP
3	J813 2420	1			RETAINER
4	J812 7059	1			SPRING
5	J575 1207	1			SWITCH
6	J813 3231	1			COVER, Case
7	J813 2900	1			E-CLIP
8	J813 2428	1			GASKET, Cover
9	J813 2897	AR			PIN
10	J813 2414	1			LUG
11	J813 2815	1			ARM, Reverse Shift
12	J813 2899	1			O-RING
13	J813 2413	1			FORK, Reverse Shift
14	J813 2418	2			WASHER, Lock
15	J813 2417	2			BOLT
16	J813 2416	1			PLATE, Rail Support
17	J813 2415	1			PLATE, Rail Support
18	J813 2412	1			FORK, 3rd and 4th Shift
19	J813 4429	1			FORK, 1st and 2nd Shift
20	J813 2419	1			PIN
21	J813 2371	2			Ring, Interlock ***
22	J813 2410	1			Rail, Reverse ***
23	J813 2409	1			RAIL, 3rd and 4th Shift
24	J813 2408	1			RAIL, 1st and 2nd Shift
25	J812 6829	AR			BALL
26	J812 6828	AR			SPRING
27	J400 3803	AR			WASHER, Lock
28	J813 4335	AR			BOLT, Shoulder
29	J812 6815	AR			BOLT, Hexagon
30	J813 4403	1			SPACER

MODEL CODES

16=Cherokee 2 Dr.(1981-83)
17=Cherokee 2 Dr.(1981-83)
73=Cherokee 2WD-2 Dr.(1984-86)
74=Cherokee 2WD-4 Dr.(1984-86)
18=Cherokee 4 Dr.(1981-83)
77=Cherokee 4WD-2 Dr.(1984-86)
78=Cherokee 4WD-4 Dr.(1984-86)
85=CJ-5 (1981-83)
86=CJ-6(1981)
87=CJ-7(1981-86)
88=CJ-8, Scrambler(1981-86)
64=Comanche 2WD-6 Ft. Box(1986)
66=Comanche 2WD-7 Ft. Box(1986)
63=Comanche 4WD-6 Ft. Box(1986)
65=Comanche 4WD-7 Ft. Box(1986)
15=Grand Wagoneer 4 Dr.(1984-86)
25=J-10 Truck 7 Ft. Box(1981-84)
26=J10 Truck 8 Ft. Box(1981-86)
27=J-20 Truck 8 Ft. Box(1981-86)
15=Wagoneer 4 Dr.(1981-83)
75=Wagoneer 4WD-4 Dr.(1984-86)

BODY
CJ=CJ-5, CJ-6, CJ-7, CJ-8, Scrambler(1981-86)
MJ=Comanche Pickup(1986)

STYLES
SJ=Wagoneer(1981-83), Grand Wagoneer(1984-86), Cherokee(1981-83), J-10, J-20(1981-86)
XJ=Wagoneer(1984-86), Cherokee(1984-86)

AR = Use as Required - = Non Illustrated Part P.A.R. = Paint as Required

« RETURN TO GROUP INDEX

TRANSMISSION CASE, EXTENSION AND MISCELLANEOUS PARTS T-18
Figure 21M-500

81J21 500

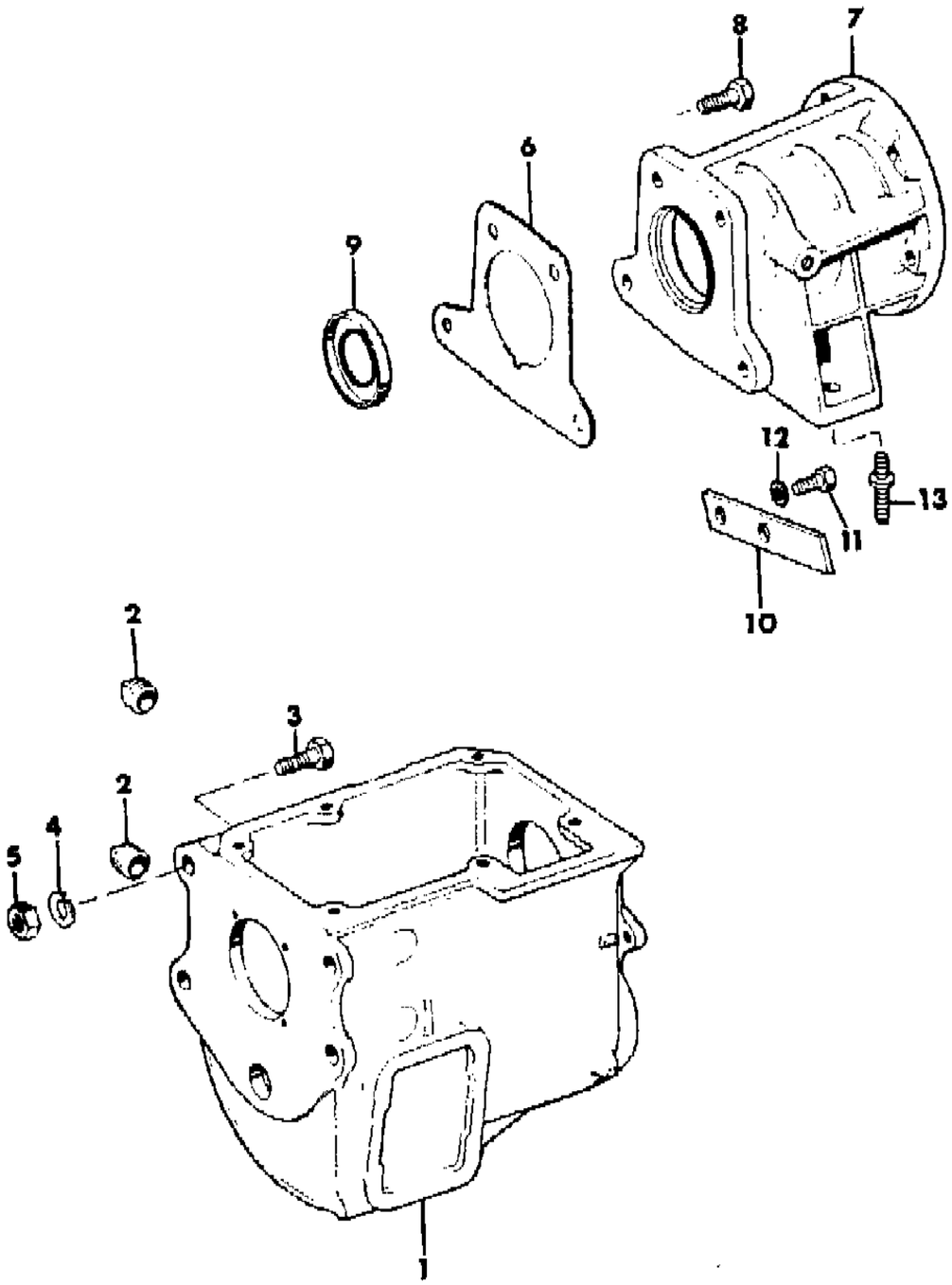

ITEM	PART NUMBER	QTY	BODY	MODEL	DESCRIPTION
1	J813 2648	1			CASE
2	S044 4592	2			PLUG
3	S941 9081	2			BOLT (7/16-14x2.00") ***
	S941 9132	2			BOLT (9/16-12x2.25") ***
4	J012 0383	2			WASHER (7/16") ***
	S012 0898	2			WASHER (9/16") ***
5	J027 1501	2			NUT (7/16-14) ***
	S941 9144	2			NUT (9/16-12) ***
6	J813 2658	1			GASKET
7	J813 2657	1			PLATE
8	J813 2958	4			BOLT
9	J813 2957	1			SEAL
10	J813 2652	1			PLATE, Lock
11	J018 0120	2			BOLT
12	J013 8149	2			WASHER
13	J400 6461	1			STUD

MODEL CODES

16=Cherokee 2 Dr.(1981-83)
17=Cherokee 2 Dr.(1981-83)
73=Cherokee 2WD-2 Dr.(1984-86)
74=Cherokee 2WD-4 Dr.(1984-86)
18=Cherokee 4 Dr.(1981-83)
77=Cherokee 4WD-2 Dr.(1984-86)
78=Cherokee 4WD-4 Dr.(1984-86)
85=CJ-5 (1981-83)
86=CJ-6(1981)
87=CJ-7(1981-86)
88=CJ-8, Scrambler(1981-86)
64=Comanche 2WD-6 Ft. Box(1986)
66=Comanche 2WD-7 Ft. Box(1986)
63=Comanche 4WD-6 Ft. Box(1986)
65=Comanche 4WD-7 Ft. Box(1986)
15=Grand Wagoneer 4 Dr.(1984-86)
25=J-10 Truck 7 Ft. Box(1981-84)
26=J10 Truck 8 Ft. Box(1981-86)
27=J-20 Truck 8 Ft. Box(1981-86)
15=Wagoneer 4 Dr.(1981-83)
75=Wagoneer 4WD-4 Dr.(1984-86)

BODY
CJ=CJ-5, CJ-6, CJ-7, CJ-8, Scrambler(1981-86)
MJ=Comanche Pickup(1986)

STYLES
SJ=Wagoneer(1981-83), Grand Wagoneer(1984-86), Cherokee(1981-83), J-10, J-20(1981-86)
XJ=Wagoneer(1984-86), Cherokee(1984-86)

AR = Use as Required - = Non Illustrated Part P.A.R. = Paint as Required

« RETURN TO GROUP INDEX

GEAR TRAIN T-18
Figure 21M-600

81J21 600 A

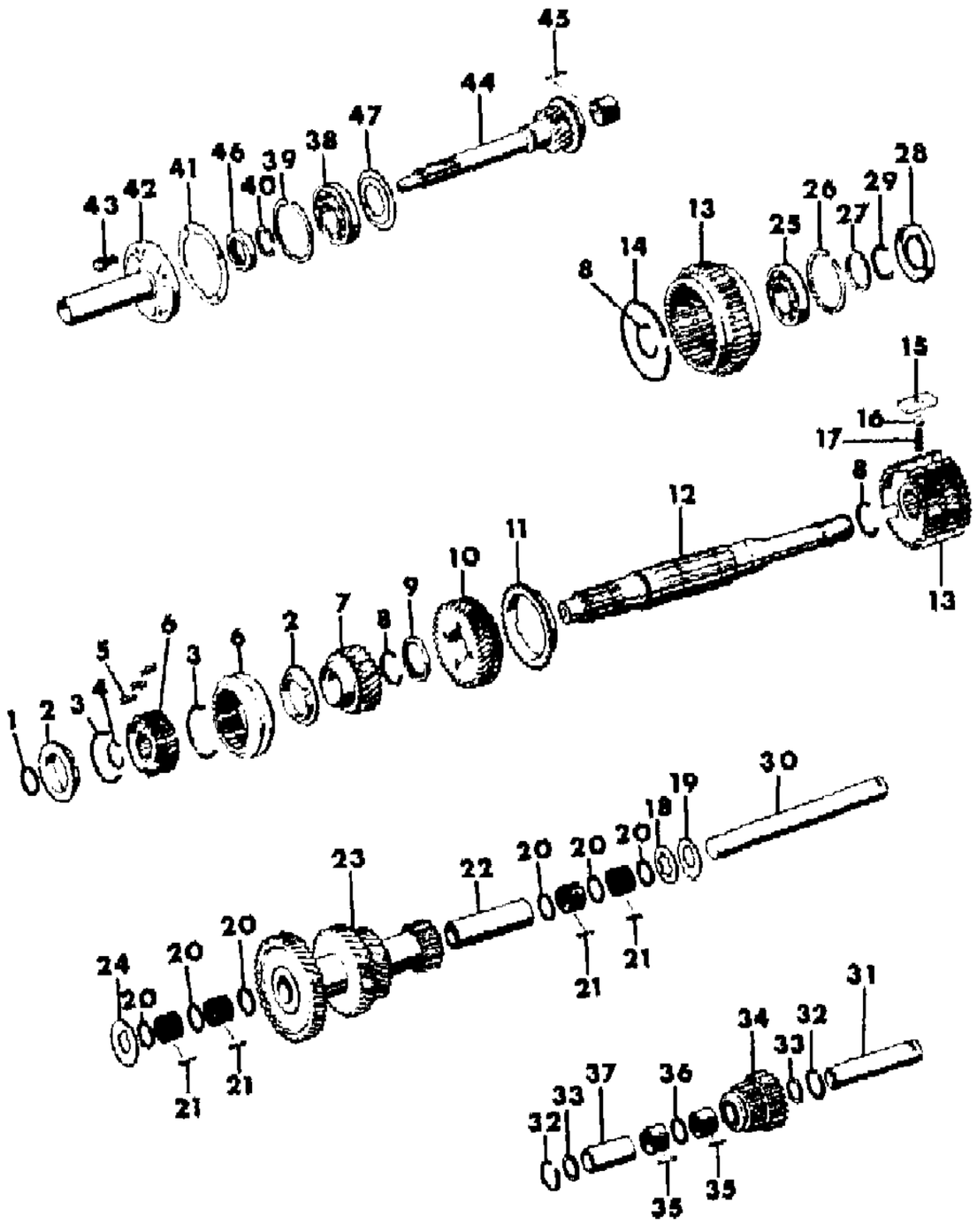

ITEM	PART NUMBER	QTY	BODY	MODEL	DESCRIPTION
1	J091 3346	1			SPACER
2	J813 0256	1			RING SET, Blocker ***
3	J813 0257	2			SPRING
4	J091 2328	1			RING, Snap
5	J318 2572	3			PLATE
6	J813 0253	1			SYNCHRONIZER, 3rd and 4th Gear
7	J813 0254	1			GEAR, Third
8	J091 2333	1			RING, Snap
9	J091 2332	1			WASHER
10	J094 0498	1			GEAR, Second
11					RING, Synchronizer
	J091 2340	1			Up to 8-22-83
	8350 1860	1			After 8-22-83
12	J813 2649	1			MAINSHAFT
13					SYNCHRONIZER, 1st and 2nd Gear
	J094 0499	1			Up to 8-22-83
	8350 1858	1			After 8-22-83, Without Blocker Rings
	8350 1859	1			After 8-22-83, With Blocker Rings
14					RING
	J091 2338	1			Up to 8-22-83
	8350 1862	1			After 8-22-83
15					PLATE
	J091 2337	3			Up to 8-22-83
	8350 1861	3			After 8-22-83
16	S045 3593	3			BALL
17	J091 7117	3			SPRING
18	J091 2350	1			WASHER
19	J093 9357	1			WASHER
20	J091 2346	6			SPACER
21	J091 2345	88			ROLLER
22	J091 2347	1			SPACER
23	J094 0502	1			CLUSTER GEAR ***
24	J091 2348	1			WASHER, Thrust
25	J091 2341	1			BEARING
26	J091 2342	1			RING
27	J813 2650	1			WASHER
28	J813 2957	1			SEAL, Adapter
29	J813 2651	1			RING, Snap
30	J094 0494	1			SHAFT

MODEL CODES

16=Cherokee 2 Dr.(1981-83)
17=Cherokee 2 Dr.(1981-83)
73=Cherokee 2WD-2 Dr.(1984-86)
74=Cherokee 2WD-4 Dr.(1984-86)
18=Cherokee 4 Dr.(1981-83)
77=Cherokee 4WD-2 Dr.(1984-86)
78=Cherokee 4WD-4 Dr.(1984-86)
85=CJ-5 (1981-83)
86=CJ-6(1981)
87=CJ-7(1981-86)
88=CJ-8, Scrambler(1981-86)
64=Comanche 2WD-6 Ft. Box(1986)
66=Comanche 2WD-7 Ft. Box(1986)
63=Comanche 4WD-6 Ft. Box(1986)
65=Comanche 4WD-7 Ft. Box(1986)
15=Grand Wagoneer 4 Dr.(1984-86)
25=J-10 Truck 7 Ft. Box(1981-84)
26=J10 Truck 8 Ft. Box(1981-86)
27=J-20 Truck 8 Ft. Box(1981-86)
15=Wagoneer 4 Dr.(1981-83)
75=Wagoneer 4WD-4 Dr.(1984-86)

BODY
CJ=CJ-5, CJ-6, CJ-7, CJ-8, Scrambler(1981-86)
MJ=Comanche Pickup(1986)

STYLES
SJ=Wagoneer(1981-83), Grand Wagoneer(1984-86), Cherokee(1981-83), J-10, J-20(1981-86)
XJ=Wagoneer(1984-86), Cherokee(1984-86)

AR = Use as Required - = Non Illustrated Part P.A.R. = Paint as Required

« RETURN TO GROUP INDEX »

GEAR TRAIN T-18
Figure 21M-600

81J21 600 A

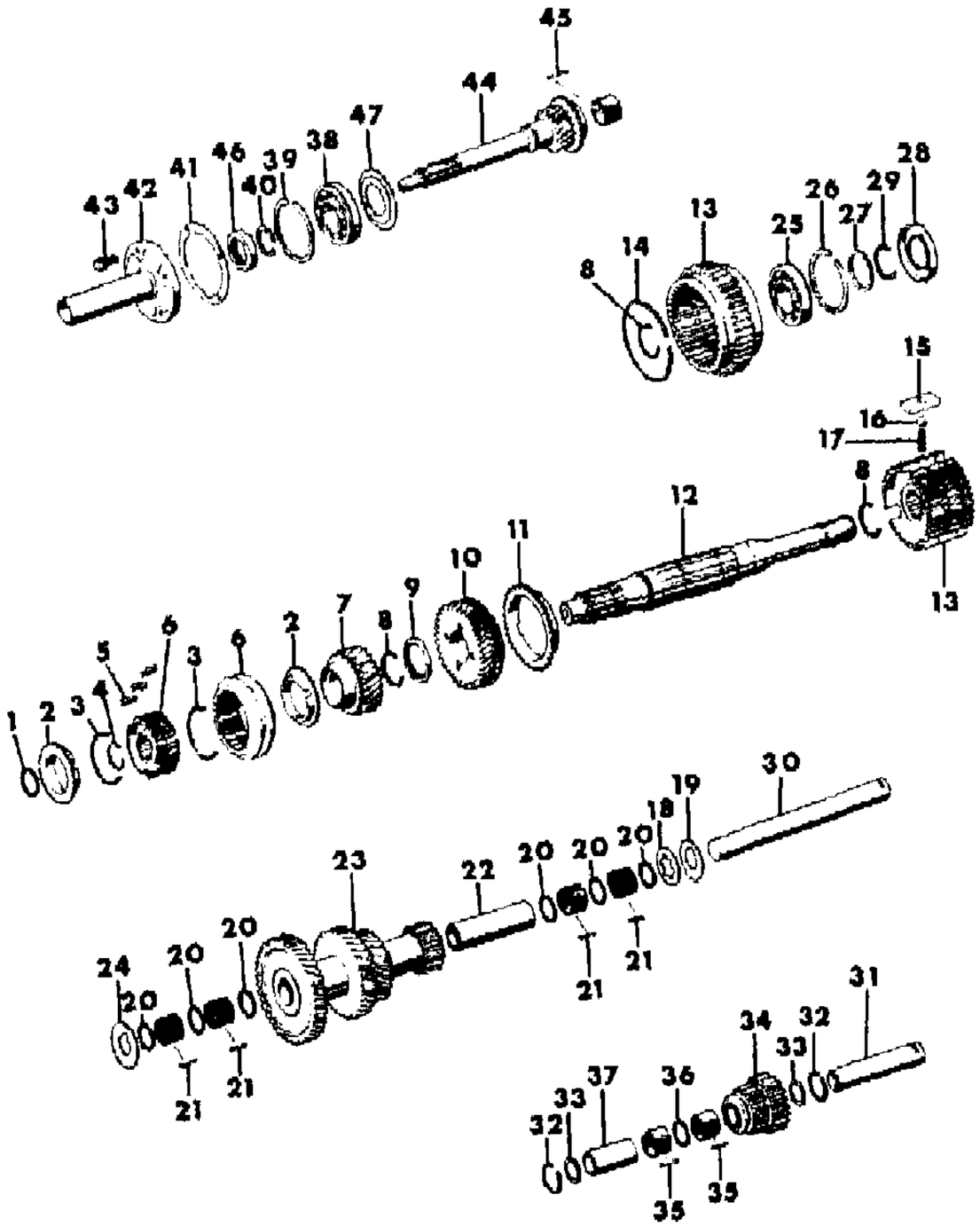

ITEM	PART NUMBER	QTY	BODY	MODEL	DESCRIPTION
31	J091 2359	1			SHAFT
32	J091 2358	2			RING, Snap
33	J001 2356	1			WASHER, Thrust
34	J094 0503	1			GEAR, Reverse Idler
35	J091 2354	74			ROLLER
36	J091 2355	1			SPACER
37	J091 2357	1			SLEEVE
38	J448 8141	1			BEARING, Front
39	J091 2342	1			RING, Snap
40					RING, Snap
	J091 2363	AR			.117" x .119"
	J091 2364	AR			.120" x .122"
	J091 2365	AR			.123" x .125"
	J091 2366	AR			.127" x .129"
41	J091 2371	1			GASKET
42	J813 2654	1			CAP
43	J018 0078	1			BOLT
44	J813 2656	1			SHAFT
45	J091 2345	1			ROLLER
46	J813 2779	1			SEAL
47	J064 0893	1			BAFFLE

MODEL CODES

16=Cherokee 2 Dr.(1981-83)
17=Cherokee 2 Dr.(1981-83)
73=Cherokee 2WD-2 Dr.(1984-86)
74=Cherokee 2WD-4 Dr.(1984-86)
18=Cherokee 4 Dr.(1981-83)
77=Cherokee 4WD-2 Dr.(1984-86)
78=Cherokee 4WD-4 Dr.(1984-86)
85=CJ-5 (1981-83)
86=CJ-6(1981)
87=CJ-7(1981-86)
88=CJ-8, Scrambler(1981-86)
64=Comanche 2WD-6 Ft. Box(1986)
66=Comanche 2WD-7 Ft. Box(1986)
63=Comanche 4WD-6 Ft. Box(1986)
65=Comanche 4WD-7 Ft. Box(1986)
15=Grand Wagoneer 4 Dr.(1984-86)
25=J-10 Truck 7 Ft. Box(1981-84)
26=J10 Truck 8 Ft. Box(1981-86)
27=J-20 Truck 8 Ft. Box(1981-86)
15=Wagoneer 4 Dr.(1981-83)
75=Wagoneer 4WD-4 Dr.(1984-86)

BODY
CJ=CJ-5, CJ-6, CJ-7, CJ-8, Scrambler(1981-86)
MJ=Comanche Pickup(1986)

STYLES
SJ=Wagoneer(1981-83), Grand Wagoneer(1984-86), Cherokee(1981-83), J-10, J-20(1981-86)
XJ=Wagoneer(1984-86), Cherokee(1984-86)

AR = Use as Required - = Non Illustrated Part P.A.R. = Paint as Required

« RETURN TO GROUP INDEX

«

SHIFT FORKS, RAILS AND SHAFTS T-18
Figure 21M-700

81J21 700

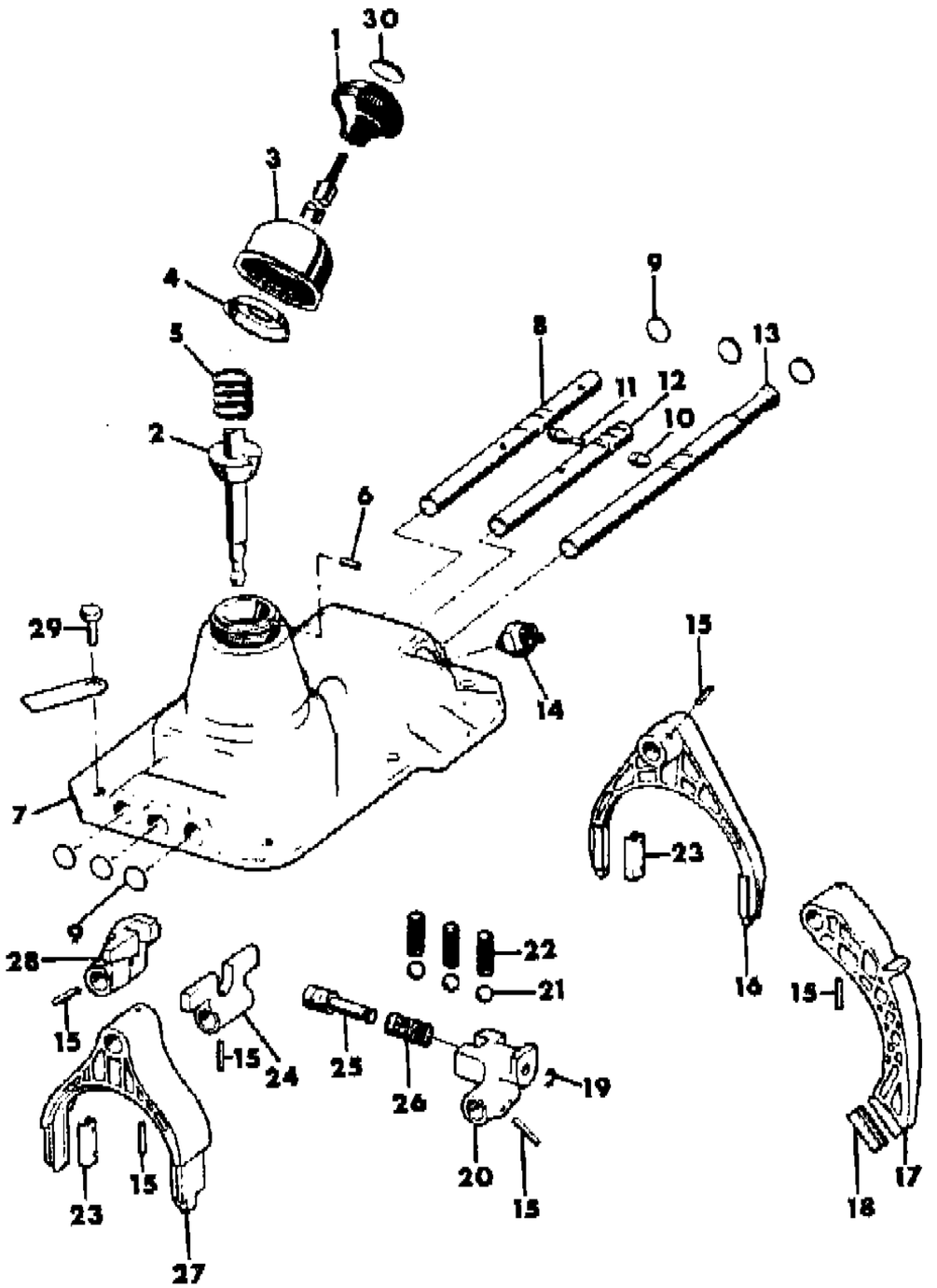

ITEM	PART NUMBER	QTY	BODY	MODEL	DESCRIPTION
1					KNOB
	J536 1404	1			With Transmission 5359568
	J536 1062	1			With Transmission 5359569
2	J813 2660	1			LEVER
3	J091 2380	1			CAP
4	J091 2379	1			RETAINER
5	J080 1732	1			SPRING
6	J091 2374	1			PIN
7	J813 0261	1			COVER
8	J813 0265	1			RAIL, 1st and 2nd Shift
9	S010 3892	AR			PLUG
10	J091 2389	2			PLUNGER
11	J091 2388	1			PIN, Locking
12	J813 0262	1			RAIL, 3rd & 4th Shift
13	J813 0269	1			RAIL, Reverse
14	J535 0061	1			SWITCH, Backup Lamp
15	S027 3503	AR			PIN, Roll
16	J813 0266	1			FORK, 1st and 2nd Shift
17	J813 0263	1			FORK, Reverse
18	J813 0273	1			INSERT
19	J091 2394	1			WASHER, Clamp
20	J813 0268	1			ARM, Reverse Shift
21	S045 3593	3			BALL
22	J813 2959	3			SPRING
23	J813 0274	4			INSERT
24	J813 0270	1			ARM, 3rd and 4th Shift
25	J813 0272	1			PLUNGER
26	J812 960	1			SPRING
27	J810 264	1			FORK, 3rd and 4th Shift
28	J810 267	1			ARM, 1st and 2nd Shift
29	S018 0121	6			BOLT
30	J324 1429	1			INSERT, With Transmission 5359569

MODEL CODES

16=Cherokee 2 Dr.(1981-83)
17=Cherokee 2 Dr.(1981-83)
73=Cherokee 2WD-2 Dr.(1984-86)
74=Cherokee 2WD-4 Dr.(1984-86)
18=Cherokee 4 Dr.(1981-83)
77=Cherokee 4WD-2 Dr.(1984-86)
78=Cherokee 4WD-4 Dr.(1984-86)
85=CJ-5 (1981-83)
86=CJ-6(1981)
87=CJ-7(1981-86)
88=CJ-8, Scrambler(1981-86)
64=Comanche 2WD-6 Ft. Box(1986)
66=Comanche 2WD-7 Ft. Box(1986)
63=Comanche 4WD-6 Ft. Box(1986)
65=Comanche 4WD-7 Ft. Box(1986)
15=Grand Wagoneer 4 Dr.(1984-86)
25=J-10 Truck 7 Ft. Box(1981-84)
26=J10 Truck 8 Ft. Box(1981-86)
27=J-20 Truck 8 Ft. Box(1981-86)
15=Wagoneer 4 Dr.(1981-83)
75=Wagoneer 4WD-4 Dr.(1984-86)

BODY
CJ=CJ-5, CJ-6, CJ-7, CJ-8, Scrambler(1981-86)
MJ=Comanche Pickup(1986)

STYLES
SJ=Wagoneer(1981-83), Grand Wagoneer(1984-86), Cherokee(1981-83), J-10, J-20(1981-86)
XJ=Wagoneer(1984-86), Cherokee(1984-86)

AR = Use as Required - = Non Illustrated Part P.A.R. = Paint as Required

« RETURN TO GROUP INDEX

TRANSMISSION CASE, EXTENSION AND MISCELLANEOUS PARTS SR-4
Figure 21M-800

81J21 800 B

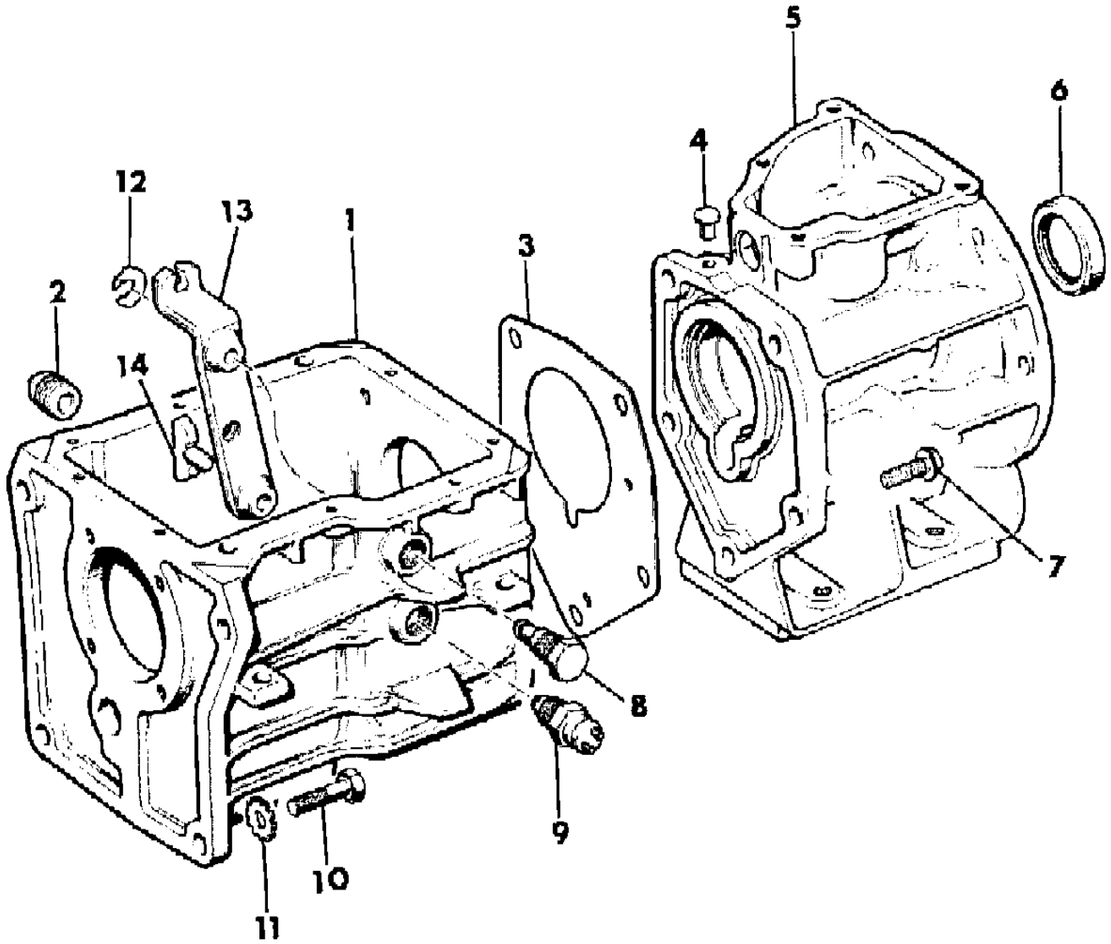

ITEM	PART NUMBER	QTY	BODY	MODEL	DESCRIPTION
1	J813 2594	1			CASE, Transmission
2	J812 9343	1			PLUG
3	J812 7385	1			GASKET, Adapter
4	J091 2375	1			BREATHER
5					ADAPTER, Transmission
	J813 3527	1			With Transmission 3239675
	J813 2671	1			With Transmission 5360956 or 5360957
6	J813 2672	1			SEAL, Adapter
7	J813 7386	5			BOLT
8	J812 7466	1			PIN, Reverse
9	J322 9472	1			SWITCH, Back-up Lamp
10	S018 0147	4			BOLT, Hexagon
11	J012 0383	4			WASHER, Lock
12	J812 7469	1			RING, Retaining, (7/16")
13	J812 7467	1			LEVER, Reverse, Relay
14	J812 7468	1			FORK, Reverse

MODEL CODES

16=Cherokee 2 Dr.(1981-83)
17=Cherokee 2 Dr.(1981-83)
73=Cherokee 2WD-2 Dr.(1984-86)
74=Cherokee 2WD-4 Dr.(1984-86)
18=Cherokee 4 Dr.(1981-83)
77=Cherokee 4WD-2 Dr.(1984-86)
78=Cherokee 4WD-4 Dr.(1984-86)
85=CJ-5 (1981-83)
86=CJ-6(1981)
87=CJ-7(1981-86)
88=CJ-8, Scrambler(1981-86)
64=Comanche 2WD-6 Ft. Box(1986)
66=Comanche 2WD-7 Ft. Box(1986)
63=Comanche 4WD-6 Ft. Box(1986)
65=Comanche 4WD-7 Ft. Box(1986)
15=Grand Wagoneer 4 Dr.(1984-86)
25=J-10 Truck 7 Ft. Box(1981-84)
26=J10 Truck 8 Ft. Box(1981-86)
27=J-20 Truck 8 Ft. Box(1981-86)
15=Wagoneer 4 Dr.(1981-83)
75=Wagoneer 4WD-4 Dr.(1984-86)

BODY
CJ=CJ-5, CJ-6, CJ-7, CJ-8, Scrambler(1981-86)
MJ=Comanche Pickup(1986)

STYLES
SJ=Wagoneer(1981-83), Grand Wagoneer(1984-86), Cherokee(1981-83), J-10, J-20(1981-86)
XJ=Wagoneer(1984-86), Cherokee(1984-86)

AR = Use as Required - = Non Illustrated Part P.A.R. = Paint as Required

« RETURN TO GROUP INDEX

GEAR TRAIN SR-4
Figure 21M-900

81J21 900

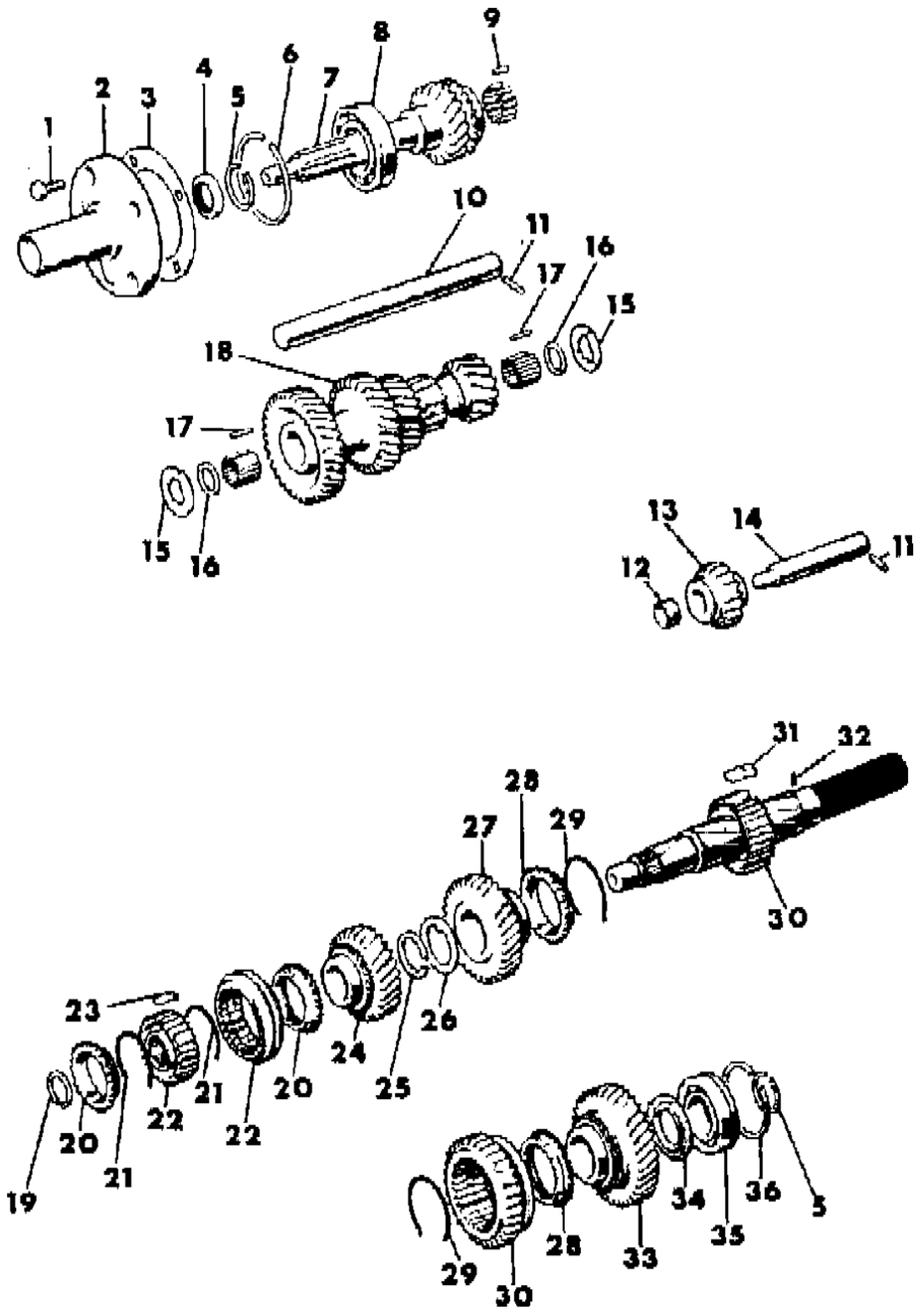

ITEM	PART NUMBER	QTY	BODY	MODEL	DESCRIPTION
1	J812 7393	4			BOLT
2	J812 7389	1			RETAINER
3	J812 7392	1			GASKET
4					SEAL
	J812 7391	1			With Transmission 5360956 or 5360957
	J813 3528	1			With Transmission 3239675
5	J812 7398	2			RING, Snap
6	J812 7395	1			RING, Locking
7					SHAFT, Input
	J813 2596	1			With Transmission 3239675 or 5360956 (20-24 Teeth)
	J813 2597	1			With Transmission 5360957 (22-27 Teeth)
8	J812 7394	1			BEARING, Front
9	J812 7397	15			ROLLER
10	J812 7433	1			SHAFT
11	J812 7434	2			PIN, Roll, (1/4" x 1")
12	J812 7464	1			BUSHING, Idler
13	J813 2882	1			GEAR, Reverse Idler
14	J813 3524	1			SHAFT, Reverse Idler
15	J812 7432	2			WASHER, Thrust
16	J812 7429	2			WASHER, Flat
17	J812 7430	50			ROLLER
18					GEAR, Cluster
	J813 2662	1			With Transmission 3239675 or 5360956 (37-21-24-15-15 Teeth)
	J812 7428	1			With Transmission 5360957 (35-29-23-15-15 Teeth)
19	J812 7420	1			RING, Snap
20	J812 7415	1			RING SET, Blocking ***
21	J812 7419	1			SPRING, Synchronizer
22	J812 7416	1			SYNCHRONIZER, 3rd and 4th Gear
23	J812 7418	3			KEY, Synchronizer
24					GEAR, Third
	J813 2674	1			With Transmission 3239675 or 53650956
	J812 7421	1			With Transmission 5360957
25	J812 7424	1			RING, Snap
26	J812 7423	1			WASHER
27					GEAR, Second
	J813 2675	1			With Transmission 3239675 or 53609546
	J812 7422	1			With Transmissions 5360957
28	J812 7403	1			RING PACKAGE, 3rd and 4th Synchronizer
29	J812 7400	2			SPRING, Synchronizer

MODEL CODES
16=Cherokee 2 Dr.(1981-83)
17=Cherokee 2 Dr.(1981-83)
73=Cherokee 2WD-2 Dr.(1984-86)
74=Cherokee 2WD-4 Dr.(1984-86)
18=Cherokee 4 Dr.(1981-83)
77=Cherokee 4WD-2 Dr.(1984-86)
78=Cherokee 4WD-4 Dr.(1984-86)
85=CJ-5 (1981-83)
86=CJ-6(1981)
87=CJ-7(1981-86)
88=CJ-8, Scrambler(1981-86)
64=Comanche 2WD-6 Ft. Box(1986)
66=Comanche 2WD-7 Ft. Box(1986)
63=Comanche 4WD-6 Ft. Box(1986)
65=Comanche 4WD-7 Ft. Box(1986)
15=Grand Wagoneer 4 Dr.(1984-86)
25=J-10 Truck 7 Ft. Box(1981-84)
26=J10 Truck 8 Ft. Box(1981-86)
27=J-20 Truck 8 Ft. Box(1981-86)
15=Wagoneer 4 Dr.(1981-83)
75=Wagoneer 4WD-4 Dr.(1984-86)

BODY
CJ=CJ-5, CJ-6, CJ-7, CJ-8, Scrambler(1981-86)
MJ=Comanche Pickup(1986)

STYLES
SJ=Wagoneer(1981-83), Grand Wagoneer(1984-86), Cherokee(1981-83), J-10, J-20(1981-86)
XJ=Wagoneer(1984-86), Cherokee(1984-86)

AR = Use as Required - = Non Illustrated Part P.A.R. = Paint as Required

GEAR TRAIN SR-4
Figure 21M-900

81J21 900

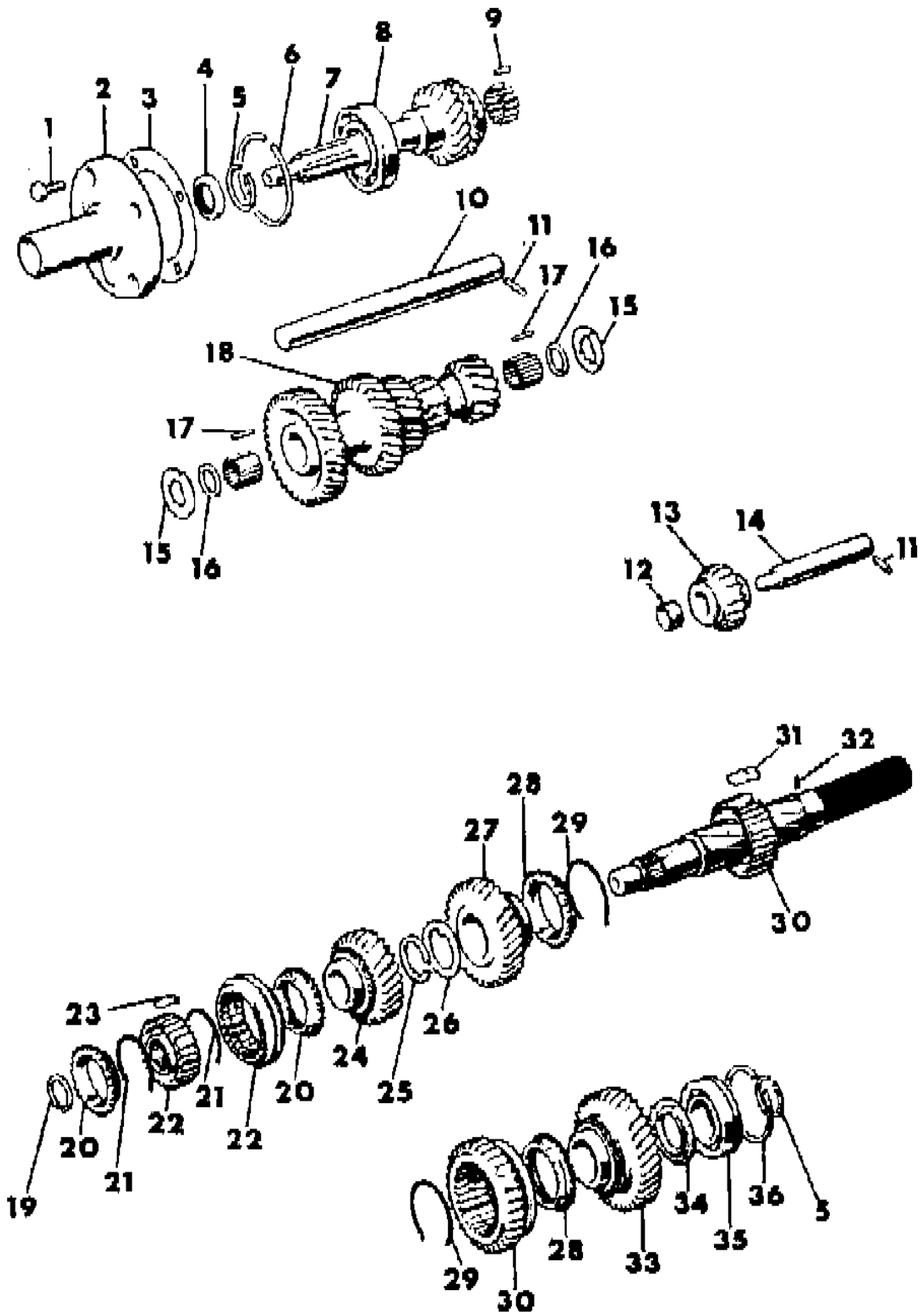

ITEM	PART NUMBER	QTY	BODY	MODEL	DESCRIPTION
30	J813 3855	1			SHAFT, Main Drive
31	J812 7401	3			KEY, Synchronizer
32	J812 7427	1			PIN
33	J812 7425	1			GEAR, First
34	J812 7426	1			WASHER, Thrust
35	J812 7407	1			BEARING
36	J812 7395	1			RING, Locking

MODEL CODES

16=Cherokee 2 Dr.(1981-83)
17=Cherokee 2 Dr.(1981-83)
73=Cherokee 2WD-2 Dr.(1984-86)
74=Cherokee 2WD-4 Dr.(1984-86)
18=Cherokee 4 Dr.(1981-83)
77=Cherokee 4WD-2 Dr.(1984-86)
78=Cherokee 4WD-4 Dr.(1984-86)
85=CJ-5 (1981-83)
86=CJ-6(1981)
87=CJ-7(1981-86)
88=CJ-8, Scrambler(1981-86)
64=Comanche 2WD-6 Ft. Box(1986)
66=Comanche 2WD-7 Ft. Box(1986)
63=Comanche 4WD-6 Ft. Box(1986)
65=Comanche 4WD-7 Ft. Box(1986)
15=Grand Wagoneer 4 Dr.(1984-86)
25=J-10 Truck 7 Ft. Box(1981-84)
26=J10 Truck 8 Ft. Box(1981-86)
27=J-20 Truck 8 Ft. Box(1981-86)
15=Wagoneer 4 Dr.(1981-83)
75=Wagoneer 4WD-4 Dr.(1984-86)

BODY
CJ=CJ-5, CJ-6, CJ-7, CJ-8, Scrambler(1981-86)
MJ=Comanche Pickup(1986)

STYLES
SJ=Wagoneer(1981-83), Grand Wagoneer(1984-86), Cherokee(1981-83), J-10, J-20(1981-86)
XJ=Wagoneer(1984-86), Cherokee(1984-86)

AR = Use as Required - = Non Illustrated Part P.A.R. = Paint as Required

« RETURN TO GROUP INDEX

SHIFT FORKS, RAILS AND SHAFTS SR-4
Figure 21M-1000

81J21 1000

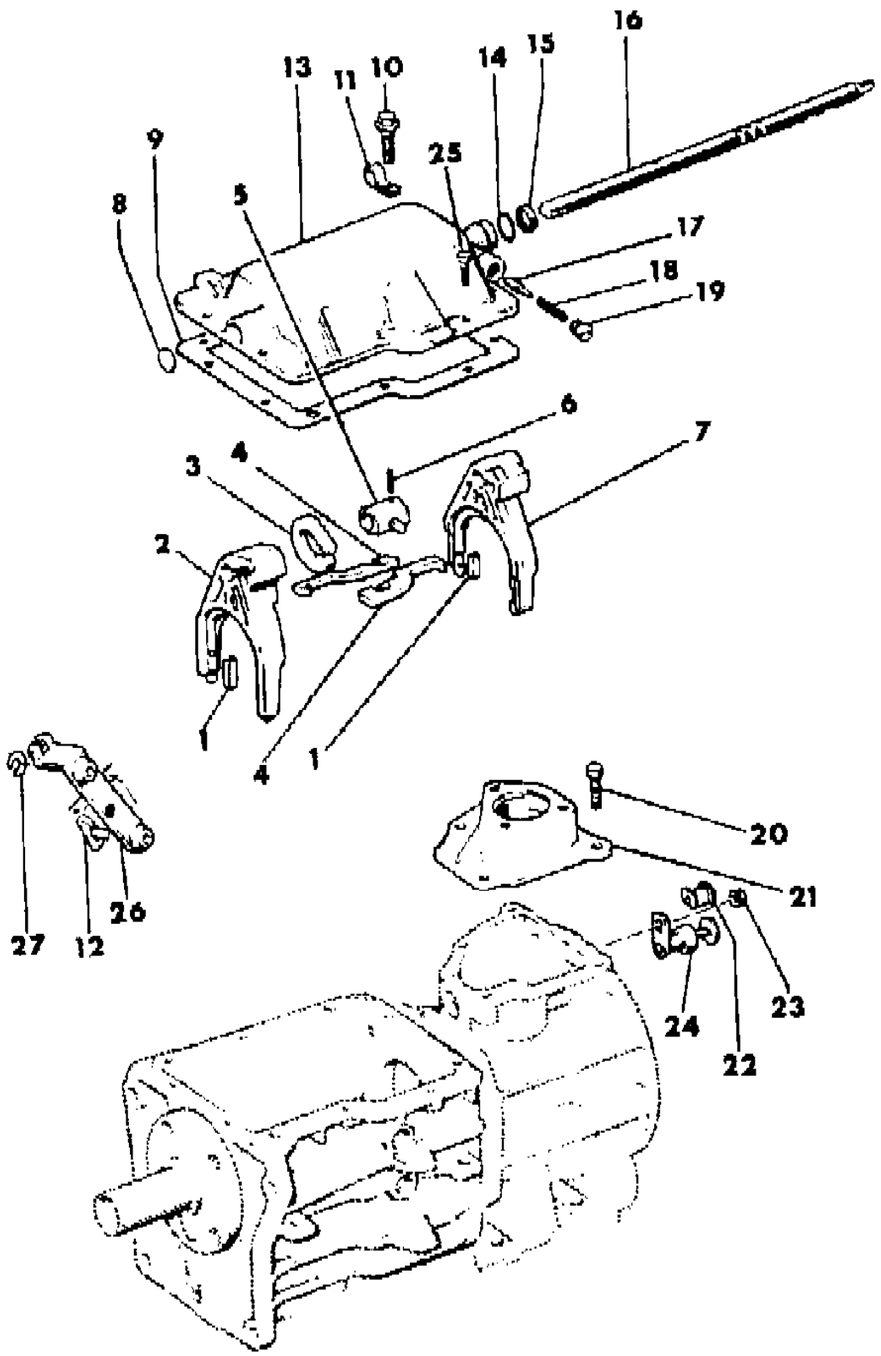

ITEM	PART NUMBER	QTY	BODY	MODEL	DESCRIPTION
1	J813 3418	4			INSERTS ***
2	J812 7481	1			FORK, 3rd and 4th Shift
3					PLATE, Shift
	J813 3530	1			With Transmission 3239675
	J812 7486	1			With Transmission 5360956 or 5360957
4	J812 7482	2			PLATE, Shift
5	J812 7487	1			ARM, Selector
6	J812 8387	1			PIN
7	J812 7483	1			FORK, 1st and 2nd Shift
8	J812 7473	1			PLUG
9	J812 7477	1			GASKET, Cover
10	J812 7479	2			BOLT, Shoulder
11	J812 7480	1			CLIP
12	J812 7468	1			FORK, Reverse
13	J813 2664	1			COVER, Case
14	J812 7471	1			O-RING
15					SEAL, Shaft Oil
	J813 3529	1			With Transmission 3239675
	J812 7472	1			With Transmission 5360956 or 53650957
16	J813 2665	1			RAIL, Shift Fork
17	J812 7474	1			PLUNGER
18	J812 7475	1			SPRING
19	J812 7476	1			SCREW
20	J018 0078	4			BOLT
21	J813 2693	1			HOUSING
22	J812 7490	1			BUSHING
23	J812 7495	1			NUT
24	J813 2670	1			LEVER, Rail
25	J812 7478	8			BOLT
26	J812 7467	1			LEVER, Reverse
27	J812 7469	1			RING, Retaining

MODEL CODES

16=Cherokee 2 Dr.(1981-83)
17=Cherokee 2 Dr.(1981-83)
73=Cherokee 2WD-2 Dr.(1984-86)
74=Cherokee 2WD-4 Dr.(1984-86)
18=Cherokee 4 Dr.(1981-83)
77=Cherokee 4WD-2 Dr.(1984-86)
78=Cherokee 4WD-4 Dr.(1984-86)
85=CJ-5 (1981-83)
86=CJ-6(1981)
87=CJ-7(1981-86)
88=CJ-8, Scrambler(1981-86)
64=Comanche 2WD-6 Ft. Box(1986)
66=Comanche 2WD-7 Ft. Box(1986)
63=Comanche 4WD-6 Ft. Box(1986)
65=Comanche 4WD-7 Ft. Box(1986)
15=Grand Wagoneer 4 Dr.(1984-86)
25=J-10 Truck 7 Ft. Box(1981-84)
26=J10 Truck 8 Ft. Box(1981-86)
27=J-20 Truck 8 Ft. Box(1981-86)
15=Wagoneer 4 Dr.(1981-83)
75=Wagoneer 4WD-4 Dr.(1984-86)

BODY
CJ=CJ-5, CJ-6, CJ-7, CJ-8, Scrambler(1981-86)
MJ=Comanche Pickup(1986)

STYLES
SJ=Wagoneer(1981-83), Grand Wagoneer(1984-86), Cherokee(1981-83), J-10, J-20(1981-86)
XJ=Wagoneer(1984-86), Cherokee(1984-86)

AR = Use as Required - = Non Illustrated Part P.A.R. = Paint as Required

« RETURN TO GROUP INDEX

TRANSMISSION CASE, EXTENSION AND MISCELLANEOUS PARTS T-4 OR T-5
Figure 21M-1100

81J21 1100

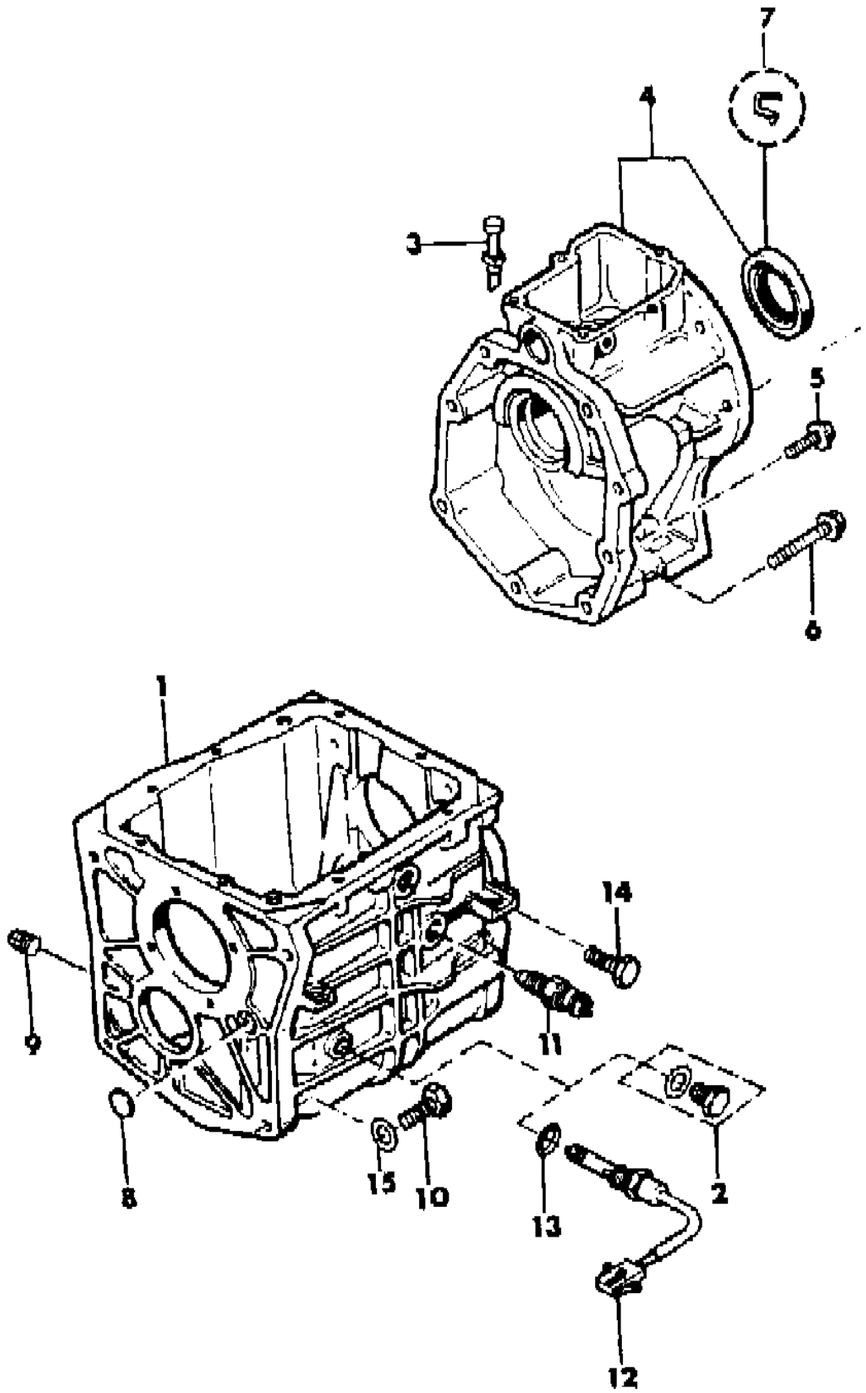

ITEM	PART NUMBER	QTY	BODY	MODEL	DESCRIPTION
1					CASE, Transmission
	J813 4009	1	CJ, XJ		With 4 Speed Transmission, Without System Sentry
	8350 0340	1	XJ		With 5 Speed Transmission, With System Sentry
	J813 4093	1	CJ,XJ		With 5 Speed Transmission, Without System Sentry
	8350 0980	1	XJ		With 5 Speed Transmission, With System Sentry
2	8350 0271	1	XJ		PLUG PACKAGE, Without System Sentry ***
3	J091 2375	1			BREATHER
4					ADAPTER/SEAL, Transmission ***
	8351 0185	1	CJ, XJ		With 4 Speed Transmission
	J813 4095	1	XJ		With 5 Speed Transmission
	J813 4095	1	CJ		With 5 Speed Transmission, Without Transmissions 3241888 or 53001098
	J813 4028	1	CJ		With 5 Speed Transmission, Tagged 3241888 or 53001098
	J813 4028	1	SJ		With 5 Speed Transmission
5	J813 4098	7			BOLT
6	J813 4099	AR			BOLT
7	J813 2672	1			SEAL
8	J812 7473	1			PLUG
9	J812 9343	1			PLUG, Drain
10					BOLT
	J400 6682	AR	CJ, SJ		7/16"-14x1-1/4"
	J941 9076	AR	CJ		7/16"-14x1-3/8"
	3420 1848	AR	CJ, XJ		M12-1.75x35mm
11	J322 9472	1			SWITCH, Backup Lamp
12	5300 0376	1	XJ		SENSOR, Transmission Oil Level, With System Sentry
13	3300 0322	1			GASKET, Sensor
14	J813 4041	1			PIN, Reverse
15	S011 4607	4			WASHER, Lock

MODEL CODES

16=Cherokee 2 Dr.(1981-83)	78=Cherokee 4WD-4 Dr.(1984-86)	64=Comanche 2WD-6 Ft. Box(1986)	25=J-10 Truck 7 Ft. Box(1981-84)
17=Cherokee 2 Dr.(1981-83)	85=CJ-5 (1981-83)	66=Comanche 2WD-7 Ft. Box(1986)	26=J10 Truck 8 Ft. Box(1981-86)
73=Cherokee 2WD-2 Dr.(1984-86)	86=CJ-6(1981)	63=Comanche 4WD-6 Ft. Box(1986)	27=J-20 Truck 8 Ft. Box(1981-86)
74=Cherokee 2WD-4 Dr.(1984-86)	87=CJ-7(1981-86)	65=Comanche 4WD-7 Ft. Box(1986)	15=Wagoneer 4 Dr.(1981-83)
18=Cherokee 4 Dr.(1981-83)	88=CJ-8, Scrambler(1981-86)	15=Grand Wagoneer 4 Dr.(1984-86)	75=Wagoneer 4WD-4 Dr.(1984-86)
77=Cherokee 4WD-2 Dr.(1984-86)			

BODY
CJ=CJ-5, CJ-6, CJ-7, CJ-8, Scrambler(1981-86)
MJ=Comanche Pickup(1986)

STYLES
SJ=Wagoneer(1981-83), Grand Wagoneer(1984-86), Cherokee(1981-83), J-10, J-20(1981-86)
XJ=Wagoneer(1984-86), Cherokee(1984-86)

AR = Use as Required - = Non Illustrated Part P.A.R. = Paint as Required

« RETURN TO GROUP INDEX

GEAR TRAIN T4
Figure 21M-1200

81J21 1200

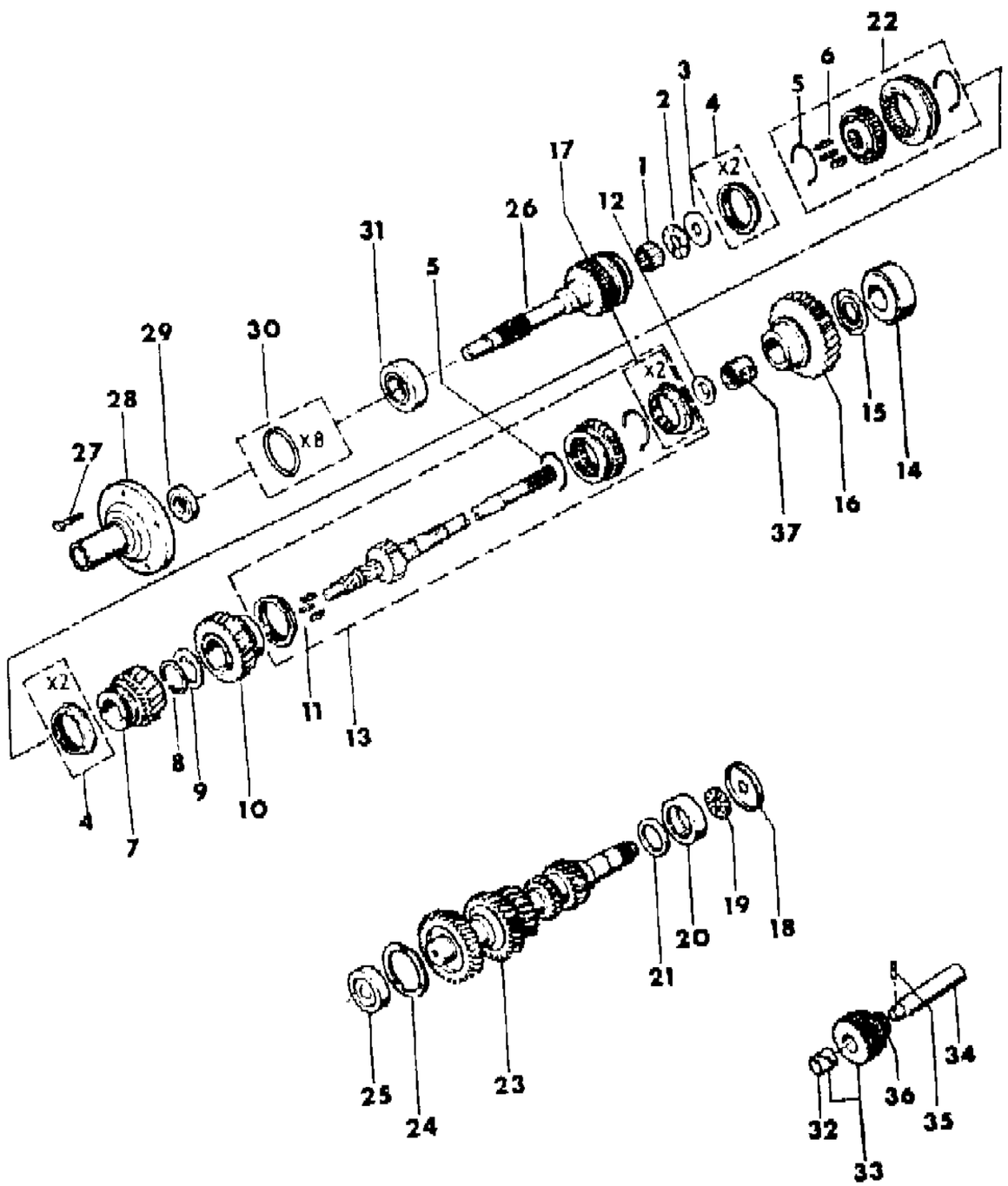

ITEM	PART NUMBER	QTY	BODY	MODEL	DESCRIPTION
1	J812 7397	1			BEARING, Roller
2	J813 4018	1			BEARING, Thrust
3	J813 4017	1			RACE, Thrust Washer
4	J813 4058	1			RING SET, Blocking ***
5	J813 4021	4			SPRING
6	J812 7418	3			INSERT
7					GEAR, Third
	8350 0285	1	CJ		With Transmission 3240556, 3241440 or 8953001097 (29 Teeth)
	8350 0380	1	CJ		With Transmission 8953001502, 8953001503, 8953001504, 8953001337, 8953001939, 8953001940, 8953001941, 8953001942, 8953001942 or 8953001943 (27 Teeth)
	8350 0380	1	XJ		(27 Teeth)
8	J812 7424	1			RING, Snap
9	J813 4025	1			WASHER, Thrust
10	J813 4024	1			GEAR, Second, (31 Teeth)
11	J812 7401	3			INSERT
12	8350 0962	1			RACE, With Transmission 8953001337, 8953001502, 8953001503, 8953001504, 8953001939, 8953001940, 8953001941, 8953001942, 8953001943 or 8953001505
13					SHAFT PACKAGE
	8350 1166	1	CJ		With Transmission 3240556, 3241440 or 8953001097. No Pin used with Replacement Shaft.
	8350 1166	1	XJ		With Transmission 8953000325 or 8953001128
	8950 1944	1	CJ		With Transmission 8953001502, 503, 504, 505, 939, 940, 941, 942, 943 or 337. No Pin used with Replacement Shaft.
	8350 1944	1	XJ		With Transmission 8953001547, 8953001548, 8953002269
14	J813 4030	1			BEARING
15	8350 0964	1			WASHER, Thrust
16					GEAR, First
	8350 1103	1	CJ		With Tranmission 3240556, 3241440 or 8953001097. No Pin used with Replacement Shaft.
	8350 1103	1	XJ		With Transmission 8953000325 or 8953001128
	8350 0965	1	CJ		With Transmission 8953001502, 503, 504, 505, 939, 940, 941, 942, 943 or 337
	8350 0965	1	XJ		With Transmission 8953001547, 548 or 2269
17	J812 7403	2			RING SET, Blocking ***
18	J813 4037	1			RACE, Thrust Washer
19	J813 4034	1			BEARING, Needle

MODEL CODES

16=Cherokee 2 Dr.(1981-83)
17=Cherokee 2 Dr.(1981-83)
73=Cherokee 2WD-2 Dr.(1984-86)
74=Cherokee 2WD-4 Dr.(1984-86)
18=Cherokee 4 Dr.(1981-83)
77=Cherokee 4WD-2 Dr.(1984-86)
78=Cherokee 4WD-4 Dr.(1984-86)
85=CJ-5 (1981-83)
86=CJ-6(1981)
87=CJ-7(1981-86)
88=CJ-8, Scrambler(1981-86)
64=Comanche 2WD-6 Ft. Box(1986)
66=Comanche 2WD-7 Ft. Box(1986)
63=Comanche 4WD-6 Ft. Box(1986)
65=Comanche 4WD-7 Ft. Box(1986)
15=Grand Wagoneer 4 Dr.(1984-86)
25=J-10 Truck 7 Ft. Box(1981-84)
26=J10 Truck 8 Ft. Box(1981-86)
27=J-20 Truck 8 Ft. Box(1981-86)
15=Wagoneer 4 Dr.(1981-83)
75=Wagoneer 4WD-4 Dr.(1984-86)

BODY
CJ=CJ-5, CJ-6, CJ-7, CJ-8, Scrambler(1981-86)
MJ=Comanche Pickup(1986)

STYLES
SJ=Wagoneer(1981-83), Grand Wagoneer(1984-86), Cherokee(1981-83), J-10, J-20(1981-86)
XJ=Wagoneer(1984-86), Cherokee(1984-86)

AR = Use as Required - = Non Illustrated Part P.A.R. = Paint as Required

« RETURN TO GROUP INDEX »

GEAR TRAIN T4
Figure 21M-1200

81J21 1200

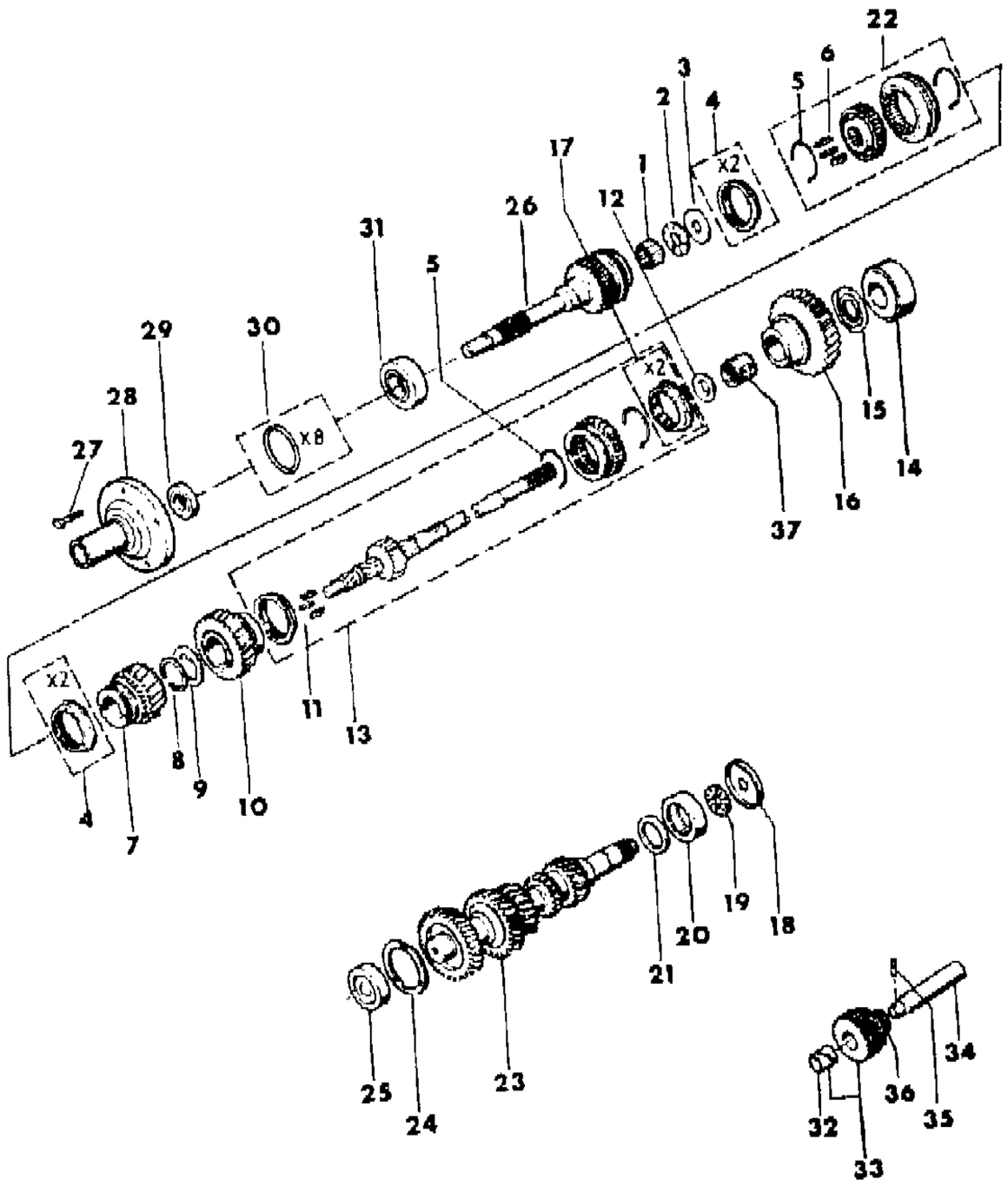

ITEM	PART NUMBER	QTY	BODY	MODEL	DESCRIPTION
20	J813 4036	1			BEARING
21	J813 4035	1			SPACER
22					SYNCHRONIZER, 3rd and 4th Gear
	J813 4027	1	CJ		With Transmission 3240556, 3241440 or 8953001097. No Pin used with Replacement Shaft.
	8350 0966	1	CJ		With Transmission 8953001502, 503, 504, 505, 939, 940, 941, 942, 943 or 337. No pin used with Replacement Shaft.
	8350 0966	1	XJ		
23					GEAR, Cluster
	J813 4031	1	CJ		With Transmission 3240556, 3241440 or 8953001097. No Pin used with Replacement Shaft. (37-34-23-15-14 Teeth)
	8350 0970	1	CJ		With Transmission 8953001502, 503, 504, 505, 939, 940, 941, 942, 943 or 337. No Pin used with Replacement Shaft. (37-32-23-15-14 Teeth)
	8350 0970	1	XJ		
24	J813 4032	1			WASHER, Thrust
25	J813 4033	1			BEARING
26					SHAFT, Input With Fourth Gear
	J813 4014	1	CJ		With Transmission 3240556 or 3241440
	8350 0286	1	CJ		With Transmission 8953001097
	8350 0975	1	CJ		With Transmission 8953001502, 503, 504, 939, 940 or 943
	8350 0968	1	CJ		With Transmission 8953001337, 505, 941 or 942
	8950 0968	1	XJ		
27	J812 7393	4			SCREW
28	J813 4013	1			RETAINER
29	J813 2779	1			SEAL
30	J813 4016	1			SHIM KIT ***
31	J813 4015	1			BEARING
32	J813 4336	1			BUSHING
33	J813 4038	1			GEAR/BUSHING, Reverse ***
34	J813 4039	1			SHAFT
35	J813 4040	1			PIN
36	8350 0287	1			O-RING
37	8350 0969	1			BEARING

MODEL CODES

16=Cherokee 2 Dr.(1981-83)
17=Cherokee 2 Dr.(1981-83)
73=Cherokee 2WD-2 Dr.(1984-86)
74=Cherokee 2WD-4 Dr.(1984-86)
18=Cherokee 4 Dr.(1981-83)
77=Cherokee 4WD-2 Dr.(1984-86)
78=Cherokee 4WD-4 Dr.(1984-86)
85=CJ-5 (1981-83)
86=CJ-6(1981)
87=CJ-7(1981-86)
88=CJ-8, Scrambler(1981-86)
64=Comanche 2WD-6 Ft. Box(1986)
66=Comanche 2WD-7 Ft. Box(1986)
63=Comanche 4WD-6 Ft. Box(1986)
65=Comanche 4WD-7 Ft. Box(1986)
15=Grand Wagoneer 4 Dr.(1984-86)
25=J-10 Truck 7 Ft. Box(1981-84)
26=J10 Truck 8 Ft. Box(1981-86)
27=J-20 Truck 8 Ft. Box(1981-86)
15=Wagoneer 4 Dr.(1981-83)
75=Wagoneer 4WD-4 Dr.(1984-86)

BODY
CJ=CJ-5, CJ-6, CJ-7, CJ-8, Scrambler(1981-86)
MJ=Comanche Pickup(1986)

STYLES
SJ=Wagoneer(1981-83), Grand Wagoneer(1984-86), Cherokee(1981-83), J-10, J-20(1981-86)
XJ=Wagoneer(1984-86), Cherokee(1984-86)

AR = Use as Required - = Non Illustrated Part P.A.R. = Paint as Required

« RETURN TO GROUP INDEX

GEAR TRAIN T5
Figure 21M-1300

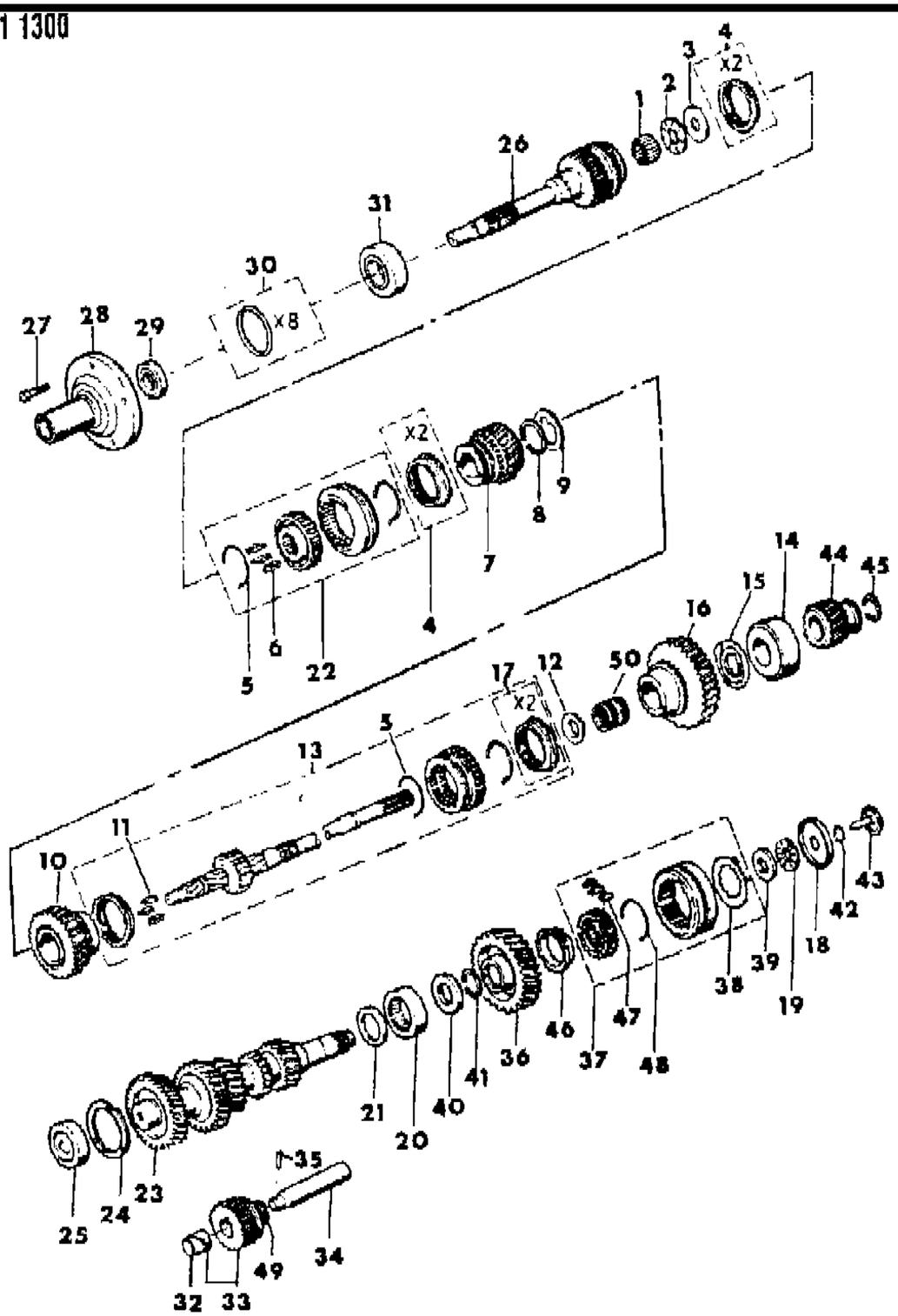

ITEM	PART NUMBER	QTY	BODY	MODEL	DESCRIPTION
1	J812 7397	12			BEARING, Roller
2	J813 4018	1			BEARING, Thrust
3	J812 4017	1			RACE, Thrust Washer
4	J813 4058	1			RING SET, Blocker ***
5	J813 4021	4			SPRING
6	J812 7418	3			INSERT
7					GEAR, Third
	J813 4026	1	CJ		With Transmission 3241886, 3241887 or 3241888 (29Teeth)
	8350 0285	1	CJ		With Transmission 8953001098 (29 Teeth)
	8350 0380	1	CJ		With Transmission 8953001506, 8653001507, 83501508, 8953001944, 8953001945, 8953001946, or 8953002518 (27 Teeth)
	8350 0380	1	XJ		(27 Teeth)
	8350 0285	1	SJ		(29 Teeth)
8	J812 7424	1			RING, Snap
9	J813 4025	1			WASHER, Thrust
10	J813 4024	1			GEAR, Second
11	J812 7401	3			INSERT
12					RACE, Thrust Washer
	8350 0962	1	CJ		With Transmission 8953001506, 8953001507, 8953001508, 8953001944, 8953001945, 8953001946 or 8953002518
	8950 0962	1	XJ,SJ		
13					SHAFT KIT ***
	8350 1166	1	CJ		With Transmission 8953001506 or 8953001507
	8350 1944	1	CJ		With Transmission 8953001944, 8953001945, 8953001946 or 8953002518
	8350 1166	1	XJ		With Transmission 8953001130, 8953001131 or 8953000408
	8350 1944	1	XJ		With Transmission 8953001551, 8953001552 or 8953002270
	8350 1166	1	SJ		
14	J813 4030	1			BEARING
15	8350 0964	1			WASHER, Thrust
16					GEAR, First
	8350 1103	1	CJ		With Transmission 3241886, 3241887, 3241888, 8953001098, 8953001506, 8953001507 or 8953001508
	8350 0965	1	CJ		With Transmission 8953001944, 8953001945, 8953001946 or 8953002518
	8350 1103	1	XJ		With Transmission 8953001130, 8953001131 or 8953000408
	8350 0965	1	XJ		With Transmission 8953001551, 8953001552 or 8953002270
	8350 1103	1	SJ		

MODEL CODES

16=Cherokee 2 Dr.(1981-83)
17=Cherokee 2 Dr.(1981-83)
73=Cherokee 2WD-2 Dr.(1984-86)
74=Cherokee 2WD-4 Dr.(1984-86)
18=Cherokee 4 Dr.(1981-83)
77=Cherokee 4WD-2 Dr.(1984-86)
78=Cherokee 4WD-4 Dr.(1984-86)
85=CJ-5 (1981-83)
86=CJ-6(1981)
87=CJ-7(1981-86)
88=CJ-8, Scrambler(1981-86)
64=Comanche 2WD-6 Ft. Box(1986)
66=Comanche 2WD-7 Ft. Box(1986)
63=Comanche 4WD-6 Ft. Box(1986)
65=Comanche 4WD-7 Ft. Box(1986)
15=Grand Wagoneer 4 Dr.(1984-86)
25=J-10 Truck 7 Ft. Box(1981-84)
26=J10 Truck 8 Ft. Box(1981-86)
27=J-20 Truck 8 Ft. Box(1981-86)
15=Wagoneer 4 Dr.(1981-83)
75=Wagoneer 4WD-4 Dr.(1984-86)

BODY
CJ=CJ-5, CJ-6, CJ-7, CJ-8, Scrambler(1981-86)
MJ=Comanche Pickup(1986)

STYLES
SJ=Wagoneer(1981-83), Grand Wagoneer(1984-86), Cherokee(1981-83), J-10, J-20(1981-86)
XJ=Wagoneer(1984-86), Cherokee(1984-86)

AR = Use as Required - = Non Illustrated Part P.A.R. = Paint as Required

GEAR TRAIN T5
Figure 21M-1300

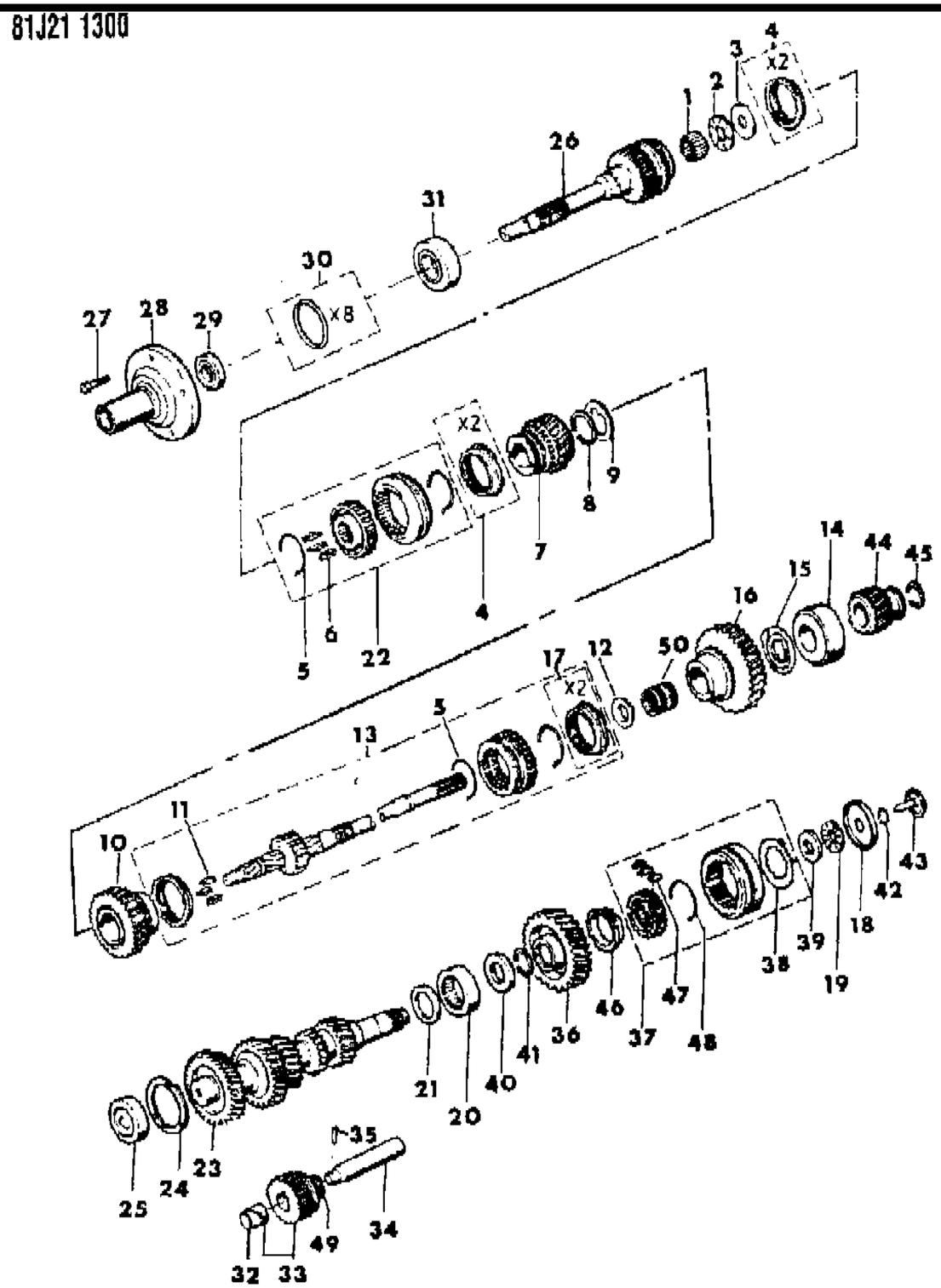

ITEM	PART NUMBER	QTY	BODY	MODEL	DESCRIPTION
17	J812 7403	2			RING SET, Blocker ***
18	J813 4037	1			RACE, Thrust Washer
19	J813 4034	1			BEARING, Needle
20	J813 4036	1			BEARING
21	J813 4035	1			SPACER
22	4549 250	1			SYNCHRONIZER, 3rd and 4th Gear
23					GEAR, Cluster
	J813 4069	1	CJ		With Transmission 3241886, 3241887, 3241888 or 8953002518
	8350 0967	1	CJ		With Transmission 8953001506, 8953001507, 8953001508, 8953001944, 8953001945, 8953001946 or 8953002518
	8350 0967	1	XJ		
	J813 4069	1	SJ		
24	J813 4070	1			WASHER, Thrust
25	J813 4071	1			BEARING
26					SHAFT, Input, w/Fourth Gear
	J813 4014	1	CJ		With Transmission 3241886, 3241887 or 3241888
	8350 0286	1	CJ		With Transmission 8953001098
	8350 0975	1	CJ		With Transmission 8953001506, 8953001507, 8953001944 or 8953001945
	8350 0968	1	CJ		With Transmission 8953001508, 8953001946 or 8953002518
	8350 0968	1	XJ		
	J813 4014	1	SJ		
27	J812 7393	4			SCREW
28	J813 4013	1			RETAINER
29	J813 2779	1			SEAL
30	J813 4016	1			SHIM KIT ***
31	J813 4015	1			BEARING
32	J813 4336	1			BUSHING
33	J813 4038	1			GEAR/BUSHING, Reverse ***
34	J813 4039	1			SHAFT, Rear Idler Gear
35	J813 4040	1			PIN
36					GEAR, Fifth
	J813 4083	1	CJ		With Transmission 3241887, 3241888, 8953001506, 8953001507, 8953001944 or 8953001945 (53 Teeth)
	8350 2821	1	CJ		With Transmission 8953001508, 8953001946 or 8953002518 (51 Teeth)
	J813 4084	1	CJ		With Transmission 3241886 or 8953001098 (51 Teeth)
	8350 2821	1	XJ		(51 Teeth)
	J813 4083	1	SJ		(53 Teeth)

MODEL CODES
16=Cherokee 2 Dr.(1981-83)
17=Cherokee 2 Dr.(1981-83)
73=Cherokee 2WD-2 Dr.(1984-86)
74=Cherokee 2WD-4 Dr.(1984-86)
18=Cherokee 4 Dr.(1981-83)
77=Cherokee 4WD-2 Dr.(1984-86)
78=Cherokee 4WD-4 Dr.(1984-86)
85=CJ-5 (1981-83)
86=CJ-6(1981)
87=CJ-7(1981-86)
88=CJ-8, Scrambler(1981-86)
64=Comanche 2WD-6 Ft. Box(1986)
66=Comanche 2WD-7 Ft. Box(1986)
63=Comanche 4WD-6 Ft. Box(1986)
65=Comanche 4WD-7 Ft. Box(1986)
15=Grand Wagoneer 4 Dr.(1984-86)
25=J-10 Truck 7 Ft. Box(1981-84)
26=J10 Truck 8 Ft. Box(1981-86)
27=J-20 Truck 8 Ft. Box(1981-86)
15=Wagoneer 4 Dr.(1981-83)
75=Wagoneer 4WD-4 Dr.(1984-86)

BODY
CJ=CJ-5, CJ-6, CJ-7, CJ-8, Scrambler(1981-86)
MJ=Comanche Pickup(1986)

STYLES
SJ=Wagoneer(1981-83), Grand Wagoneer(1984-86), Cherokee(1981-83), J-10, J-20(1981-86)
XJ=Wagoneer(1984-86), Cherokee(1984-86)

AR = Use as Required - = Non Illustrated Part P.A.R. = Paint as Required

GEAR TRAIN T5
Figure 21M-1300

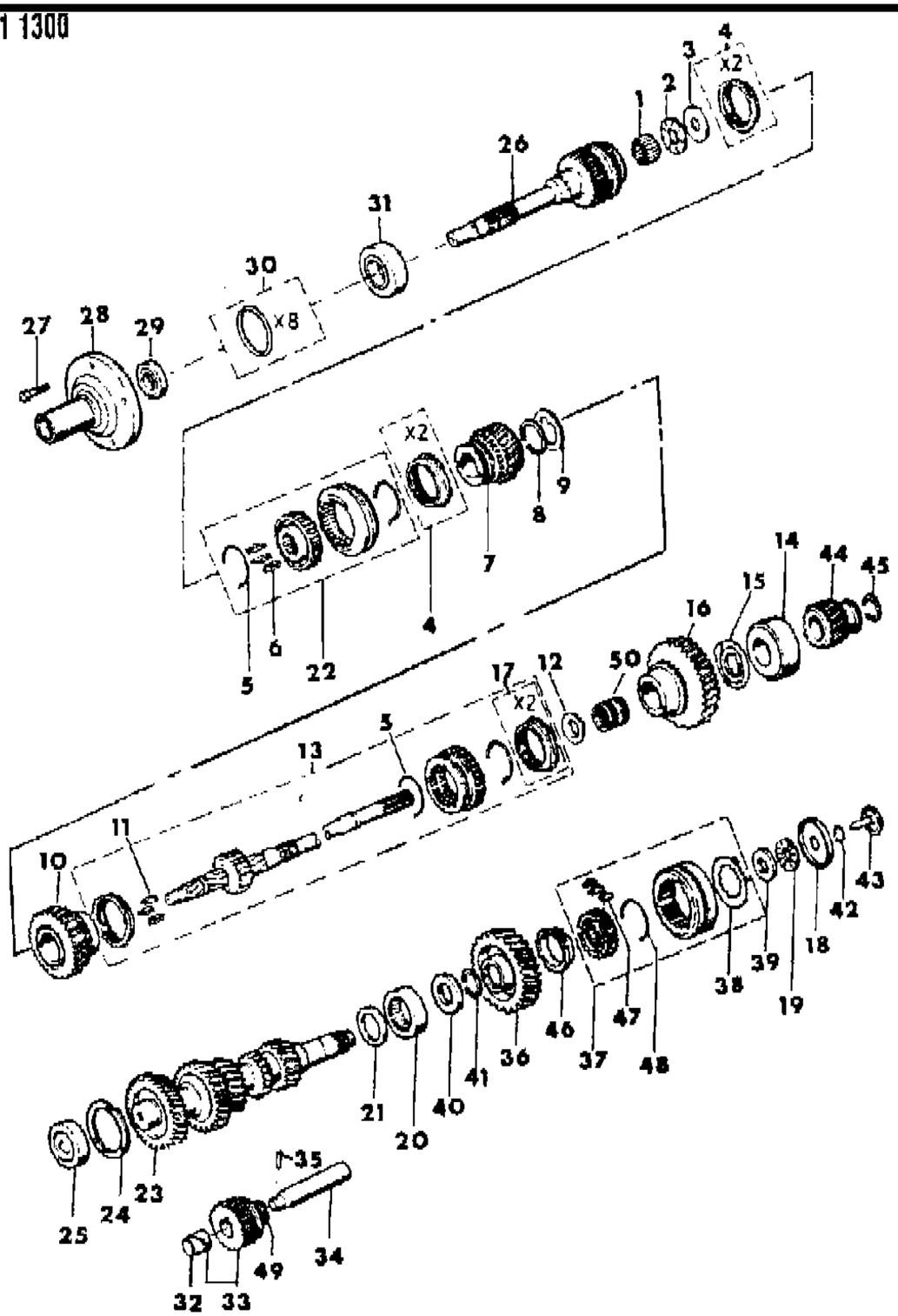

ITEM	PART NUMBER	QTY	BODY	MODEL	DESCRIPTION
37	J813 4086	1			SYNCHRONIZER, 5th Gear
38	J813 4087	1			RETAINER
39	J813 4088	1			RACE, Thrust Washer
40	J813 4072	1			SPACER
41	J813 4073	1			RING, Snap
42	J813 4089	1			RING, Snap
43	J813 4090	1			FUNNEL
44					GEAR, Fifth Driven
	J813 4080	1	CJ		With Transmission 3241887, 3241888, 8953001506, 8953001507, 8953001944 or 8953001945 (23 Teeth)
	J813 4081	1	CJ		With Transmission 3241888, 8953001098, 8953001508, 8953001946 or 8953002518 (25 Teeth)
	J813 4081	1	XJ		(25 Teeth)
	J813 4080	1	SJ		(23 Teeth)
45	J813 4082	1			RING, Snap
46	J812 7415	1			RING, Blocking
47	J812 7418	3			INSERT, 5th Gear Synchronizer
48	J812 7419	2			SPRING, 5th Gear Synchronizer
49	8350 0287	1			O-RING
50	8350 0969	1			BEARING

MODEL CODES
16=Cherokee 2 Dr.(1981-83)
17=Cherokee 2 Dr.(1981-83)
73=Cherokee 2WD-2 Dr.(1984-86)
74=Cherokee 2WD-4 Dr.(1984-86)
18=Cherokee 4 Dr.(1981-83)
77=Cherokee 4WD-2 Dr.(1984-86)
78=Cherokee 4WD-4 Dr.(1984-86)
85=CJ-5 (1981-83)
86=CJ-6(1981)
87=CJ-7(1981-86)
88=CJ-8, Scrambler(1981-86)
64=Comanche 2WD-6 Ft. Box(1986)
66=Comanche 2WD-7 Ft. Box(1986)
63=Comanche 4WD-6 Ft. Box(1986)
65=Comanche 4WD-7 Ft. Box(1986)
15=Grand Wagoneer 4 Dr.(1984-86)
25=J-10 Truck 7 Ft. Box(1981-84)
26=J10 Truck 8 Ft. Box(1981-86)
27=J-20 Truck 8 Ft. Box(1981-86)
15=Wagoneer 4 Dr.(1981-83)
75=Wagoneer 4WD-4 Dr.(1984-86)

BODY
CJ=CJ-5, CJ-6, CJ-7, CJ-8, Scrambler(1981-86)
MJ=Comanche Pickup(1986)

STYLES
SJ=Wagoneer(1981-83), Grand Wagoneer(1984-86), Cherokee(1981-83), J-10, J-20(1981-86)
XJ=Wagoneer(1984-86), Cherokee(1984-86)

AR = Use as Required - = Non Illustrated Part P.A.R. = Paint as Required

« RETURN TO GROUP INDEX

SHIFT FORKS, RAILS, AND SHAFTS T-4 OR T-5
Figure 21M-1400

81J21 1400

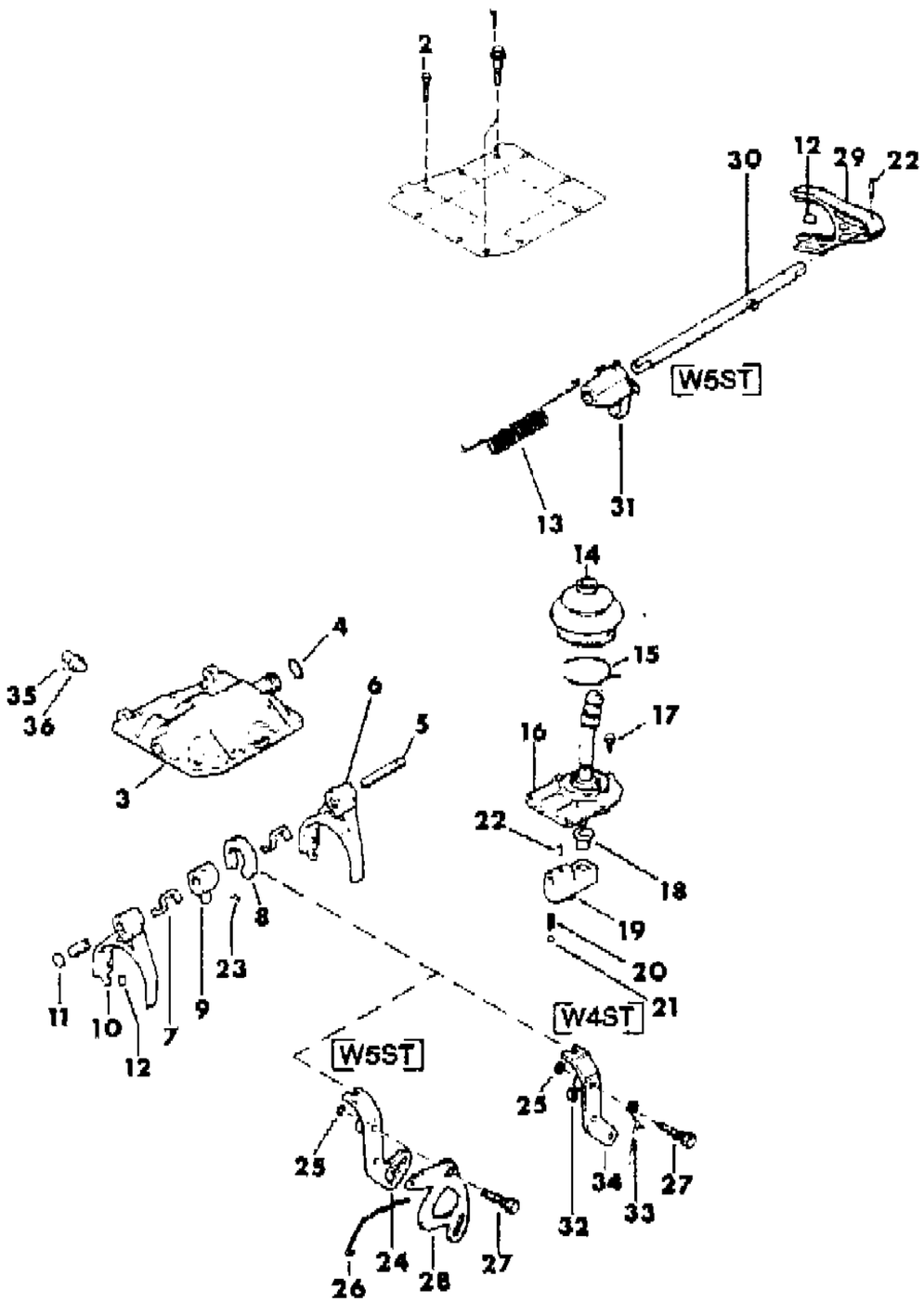

ITEM	PART NUMBER	QTY	BODY	MODEL	DESCRIPTION
1	J813 4046	2			BOLT
2	J813 4047	6			BOLT
3					COVER, Case
	J813 4045	1	CJ		With All T-4 Transmissions Except 8953001504, 8953001505, 8953001942 or 8953001943. T-5 Transmissions Except 3241888 or 8953002518
	8350 0977	1	CJ		With T-4 Transmission 8953001504, 8953001505, 8953001942 or 8953001943
	8350 2825	1	CJ		With T-5 Transmission 3241888 or 8953002518
	8350 0977	1	XJ		With T-4
	J813 4045	1	XJ, SJ		With T-5
4	J812 7471	2			O-RING
5					SHAFT, Rail
	J813 4091	1	CJ		With T-4 Transmission Except 8953001504, 8953001505, 8953001942 or 8953001943. T-5 Transmission Except 3241888 or 8953002518
	8350 2826	1	CJ		With T-4 Transmission 8953001504, 8953001505, 8953001942 or 8953001943. T-5 Transmission 3241888 or 8953002518
	J813 4091	1	XJ, SJ		
6	J813 4049	1			FORK, 1st and 2nd Shift
7	J813 4050	1			PLATE, Shift
8	J813 4051	2			PLATE, Lock
9	J812 7487	1			ARM, Selector
10	J813 4048	1			FORK, 3rd and 4th Shift
11	J812 7473	1			PLUG
12	J813 3418	4			INSERT
13	J813 4076	1			SPRING, With Five Speed Transmission
14	J813 4064	1			BOOT
15	J813 4066	1			RETAINER
16					LEVER, Gear Shift
	J813 4063	1	CJ, SJ		
	8351 0058	1	XJ		
17	J813 4067	5			SCREW
18					SLEEVE
	J813 4056	1			.12" Hole
	8350 2930	1			.40" Hole
19	J813 4055	1			LEVER
20	J813 4057	1			SPRING
21	S045 3593	1			BALL

MODEL CODES

16=Cherokee 2 Dr.(1981-83)	78=Cherokee 4WD-4 Dr.(1984-86)	64=Comanche 2WD-6 Ft. Box(1986)	25=J-10 Truck 7 Ft. Box(1981-84)
17=Cherokee 2 Dr.(1981-83)	85=CJ-5 (1981-83)	66=Comanche 2WD-7 Ft. Box(1986)	26=J10 Truck 8 Ft. Box(1981-86)
73=Cherokee 2WD-2 Dr.(1984-86)	86=CJ-6(1981)	63=Comanche 4WD-6 Ft. Box(1986)	27=J-20 Truck 8 Ft. Box(1981-86)
74=Cherokee 2WD-4 Dr.(1984-86)	87=CJ-7(1981-86)	65=Comanche 4WD-7 Ft. Box(1986)	15=Wagoneer 4 Dr.(1981-83)
18=Cherokee 4 Dr.(1981-83)	88=CJ-8, Scrambler(1981-86)	15=Grand Wagoneer 4 Dr.(1984-86)	75=Wagoneer 4WD-4 Dr.(1984-86)
77=Cherokee 4WD-2 Dr.(1984-86)			

BODY
CJ=CJ-5, CJ-6, CJ-7, CJ-8, Scrambler(1981-86)
MJ=Comanche Pickup(1986)

STYLES
SJ=Wagoneer(1981-83), Grand Wagoneer(1984-86), Cherokee(1981-83), J-10, J-20(1981-86)
XJ=Wagoneer(1984-86), Cherokee(1984-86)

AR = Use as Required - = Non Illustrated Part P.A.R. = Paint as Required

SHIFT FORKS, RAILS, AND SHAFTS T-4 OR T-5
Figure 21M-1400

81J21 1400

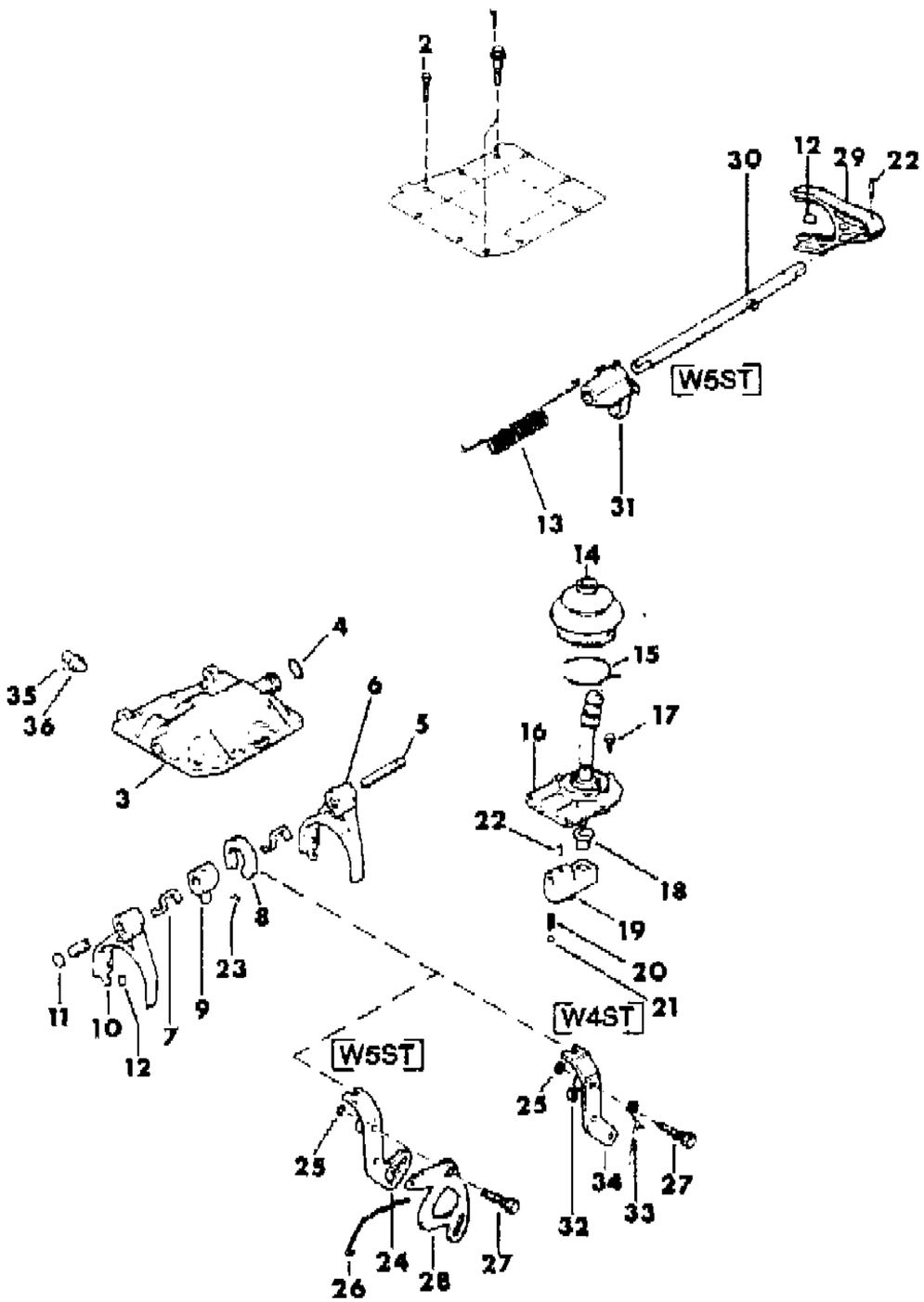

ITEM	PART NUMBER	QTY	BODY	MODEL	DESCRIPTION
22	J813 4040	2			PIN, Roll, (3/16"x1")
23	J812 8387	1			PIN, Roll, (3/16"x13/16")
24					LEVER, Reverse
	J813 4042	1			With Four Speed Transmission
	J813 4075	1			With Five Speed Transmission
25	J812 7469	1			RING, Snap
26	J813 4077	1			HOOK, Reverse Lock Spring, With Five Speed Transmission
27	J813 4041	1			PIN
28	J813 4078	1			PLATE, Shift, With Five Speed Transmission
29	J813 4085	1			FORK, 5th Shift, With Five Speed Transmission
30					RAIL, Shift Fork
	J813 4079	1	CJ		With Transmission 3241886, 3241887, 32418888, 8953001098, 8953001506, 8953001507, 8953001508 or 8953001946
	8350 2819	1	CJ		With Transmission 8953001944, 8953001945 or 8953002518
	J813 4079	1	XJ, SJ		
31					FORK, Reverse
	J813 4074	1	CJ		With Transmission 3241886 or 3241887
	8350 0284	1	CJ		With Transmission 3241888, 8953001098, 8953001506, 8953001507, 8953001508, 8953001944, 8953001946 or 8953002518
	8350 0284	1	XJ		
	J813 4074	1	SJ		
32	J813 4042	1			LEVER, Reverse, With Four Speed Transmission
33	8350 0978	1			SPRING, With Four Speed Transmission
34	J813 4043	1			LEVER, Reverse, With Four Speed Transmission
35	8350 0979	1			PIN, With Four Speed Transmission
36	5300 1433	1			SWITCH, Upshift Lamp

MODEL CODES

16=Cherokee 2 Dr.(1981-83)
17=Cherokee 2 Dr.(1981-83)
73=Cherokee 2WD-2 Dr.(1984-86)
74=Cherokee 2WD-4 Dr.(1984-86)
18=Cherokee 4 Dr.(1981-83)
77=Cherokee 4WD-2 Dr.(1984-86)
78=Cherokee 4WD-4 Dr.(1984-86)
85=CJ-5 (1981-83)
86=CJ-6(1981)
87=CJ-7(1981-86)
88=CJ-8, Scrambler(1981-86)
64=Comanche 2WD-6 Ft. Box(1986)
66=Comanche 2WD-7 Ft. Box(1986)
63=Comanche 4WD-6 Ft. Box(1986)
65=Comanche 4WD-7 Ft. Box(1986)
15=Grand Wagoneer 4 Dr.(1984-86)
25=J-10 Truck 7 Ft. Box(1981-84)
26=J10 Truck 8 Ft. Box(1981-86)
27=J-20 Truck 8 Ft. Box(1981-86)
15=Wagoneer 4 Dr.(1981-83)
75=Wagoneer 4WD-4 Dr.(1984-86)

BODY
CJ=CJ-5, CJ-6, CJ-7, CJ-8, Scrambler(1981-86)
MJ=Comanche Pickup(1986)

STYLES
SJ=Wagoneer(1981-83), Grand Wagoneer(1984-86), Cherokee(1981-83), J-10, J-20(1981-86)
XJ=Wagoneer(1984-86), Cherokee(1984-86)

AR = Use as Required - = Non Illustrated Part P.A.R. = Paint as Required

TRANSMISSION CASE, EXTENSION AND MISCELLANEOUS PARTS AX-4 OR AX-5 WITH FOUR WHEEL DRIVE
Figure 21M-1500

81J21 1500

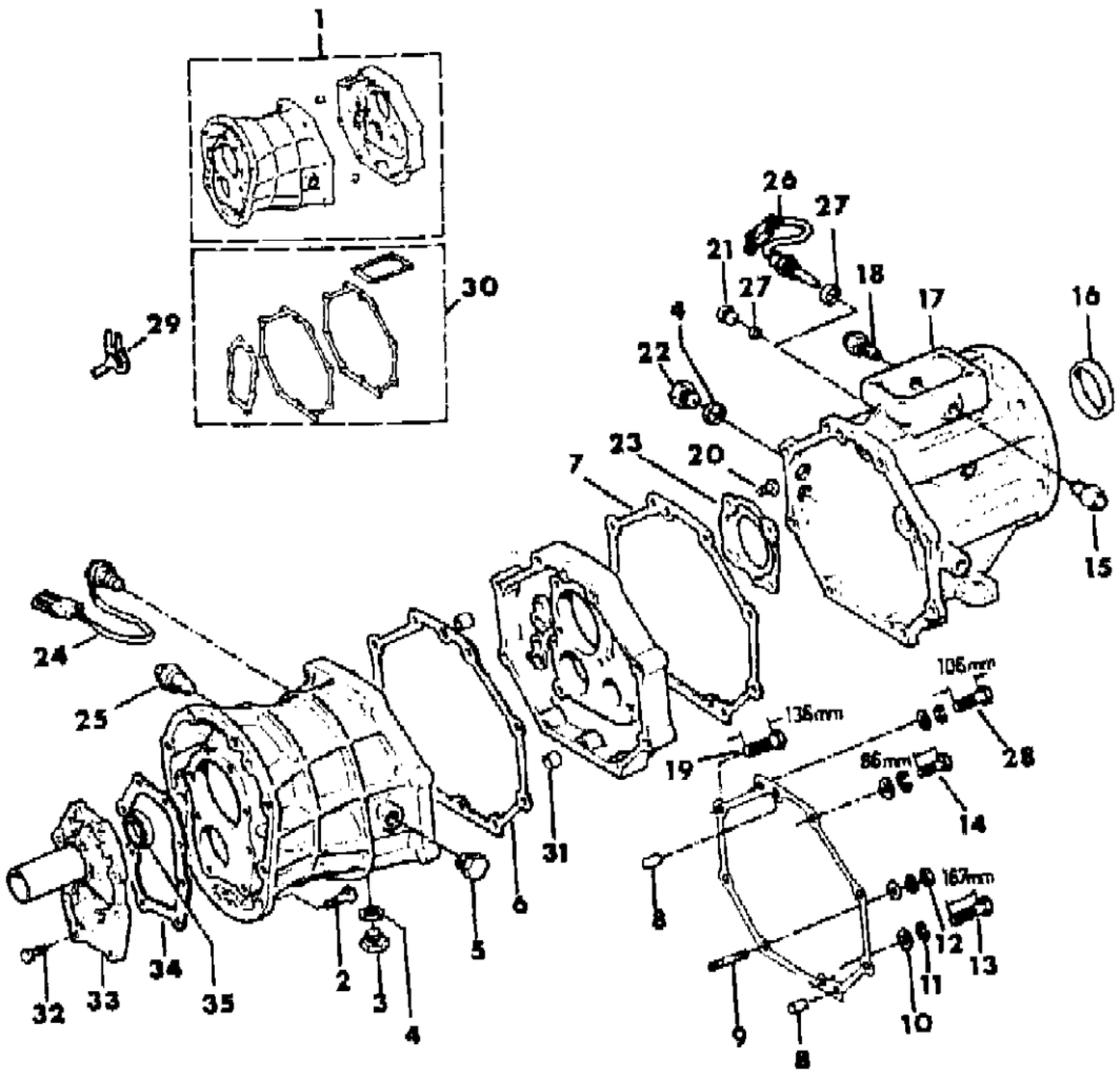

ITEM	PART NUMBER	QTY	BODY	MODEL	DESCRIPTION
1					CASE, Transmission
	8350 0634	1			With Five Speed Transmission
	8350 0502	1			With Four Speed Transmission
2					BOLT, Transmission to Clutch Housing
	3420 1914	9			Gas Engines
	3420 2317	9			Diesel Engines
3	8350 0512	1			PLUG, Drain
4	8350 0513	2			GASKET, Drain/Filler Plug
5	8350 0509	1			PLUG, Side
6	8350 0506	1			GASKET, Transmission
7	8350 0507	1			GASKET, Adpater
8	8350 0504	4			PIN
9	8350 0618	1			STUD
10	8350 0627	1			WASHER
11	8350 0626	1			WASHER
12	8350 0625	1			NUT
13					BOLT
	8350 0617	1			1984-85
	8350 3547	1			1986
14					BOLT
	8350 0622	3			1984-85
	8350 3549	5			1986
15	8350 0516	1			PIN, Reverse
16					SEAL, Adapter
	8350 0620	1			1984-85
	8350 0620	1			1986: With Transmission 8953002249, 8953002265, 8953003385, 8953003387 or 8953004249
	8350 3108	1			1986: With Transmission 8953004119, 8953004358 or 8953004359
17					ADAPTER, Transmission
	8350 0616	1			1984-85
	8350 0616	1			1986: With Transmission 8953002249, 8953002265, 8953003385, 8953003387 or 8953002249
	8350 3629	1			1986: With Transmission 8953004119, 8953004358 or 8953004359
	8350 3630	1			1986: With Transmission 8953004359
18	8350 0515	1			PIN, Reverse
19					BOLT, With Washer
	8350 0621	1			1984-85

MODEL CODES
16=Cherokee 2 Dr.(1981-83)
17=Cherokee 2 Dr.(1981-83)
73=Cherokee 2WD-2 Dr.(1984-86)
74=Cherokee 2WD-4 Dr.(1984-86)
18=Cherokee 4 Dr.(1981-83)
77=Cherokee 4WD-2 Dr.(1984-86)
78=Cherokee 4WD-4 Dr.(1984-86)
85=CJ-5 (1981-83)
86=CJ-6(1981)
87=CJ-7(1981-86)
88=CJ-8, Scrambler(1981-86)
64=Comanche 2WD-6 Ft. Box(1986)
66=Comanche 2WD-7 Ft. Box(1986)
63=Comanche 4WD-6 Ft. Box(1986)
65=Comanche 4WD-7 Ft. Box(1986)
15=Grand Wagoneer 4 Dr.(1984-86)
25=J-10 Truck 7 Ft. Box(1981-84)
26=J10 Truck 8 Ft. Box(1981-86)
27=J-20 Truck 8 Ft. Box(1981-86)
15=Wagoneer 4 Dr.(1981-83)
75=Wagoneer 4WD-4 Dr.(1984-86)

BODY
CJ=CJ-5, CJ-6, CJ-7, CJ-8, Scrambler(1981-86)
MJ=Comanche Pickup(1986)

STYLES
SJ=Wagoneer(1981-83), Grand Wagoneer(1984-86), Cherokee(1981-83), J-10, J-20(1981-86)
XJ=Wagoneer(1984-86), Cherokee(1984-86)

AR = Use as Required - = Non Illustrated Part P.A.R. = Paint as Required

TRANSMISSION CASE, EXTENSION AND MISCELLANEOUS PARTS AX-4 OR AX-5 WITH FOUR WHEEL DRIVE
Figure 21M-1500

81J21 1500

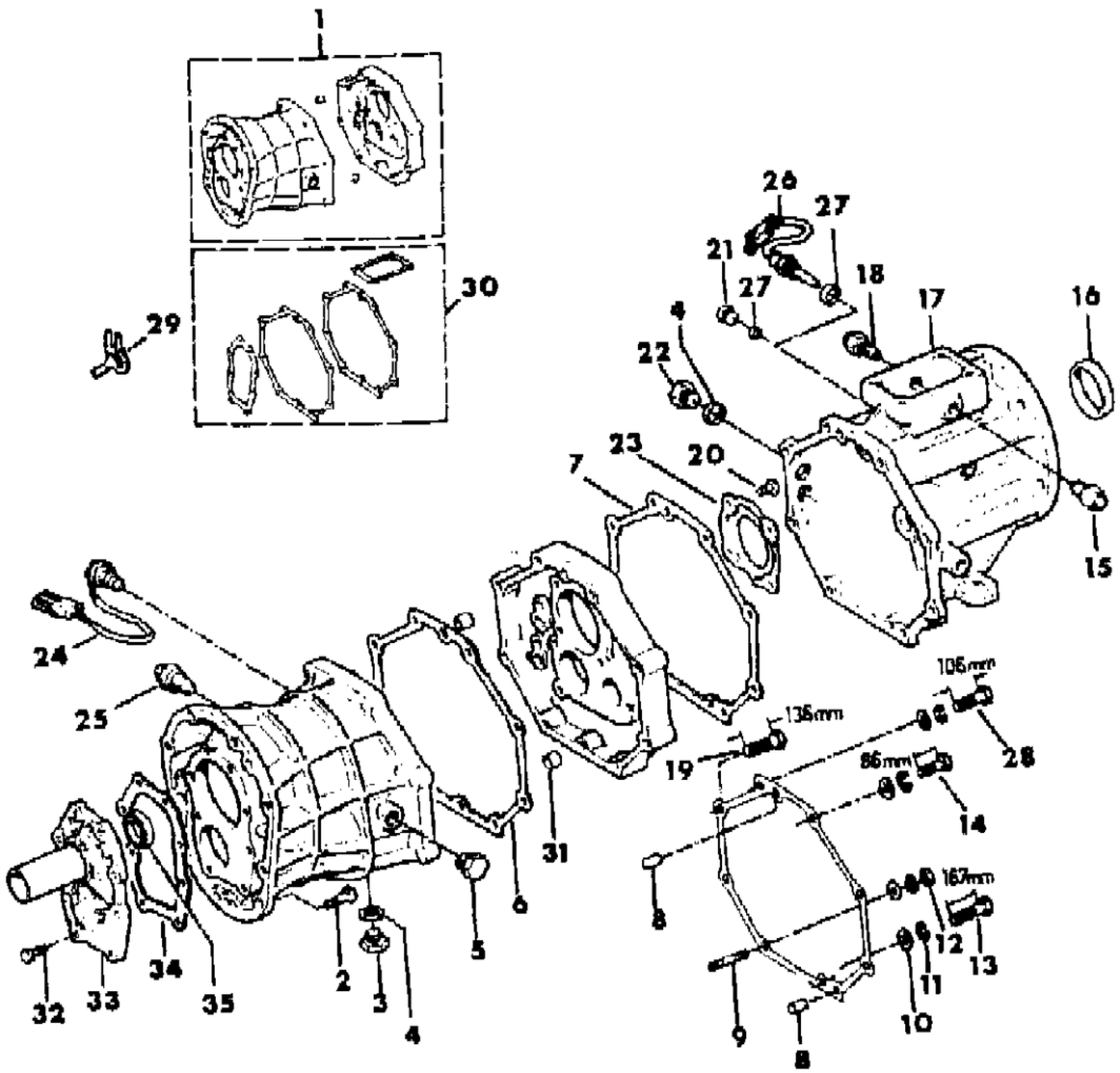

ITEM	PART NUMBER	QTY	BODY	MODEL	DESCRIPTION
	8350 3548	1			1986
20	8350 0511	4			BOLT
21	8350 0628	1			PLUG, Sensor Without System Sentry
22	8350 0623	1			PLUG, Filler
23	8350 0508	1			RETAINER
24	8350 0629	1			SWITCH, Back-up Lamp
25					SWITCH, Upshift Lamp
	8350 0630	1			1984: With Transmission 8953001565
	5300 2831	1			1985: With Transmission 8953002264 or 8953002265
	5300 2831	1			1986
26	5300 0376	1			SENSOR, With System Sentry
27	3300 0322	1			GASKET
28	8350 0972	2			BOLT
29					CLAMP
	8350 0631	1			1984-85
	8350 0631	1			1986: With Transmission 8953002249, 8953002265, 8953003385, 8953003387 or 8953004249
	8350 3551	1			1986: With Transmission 8953004119, 8953004358 or 8953004359
30	8350 0632	1			GASKET PACKAGE, Transmission Overhaul
31	8350 0539	2			PIN
32	8350 0510	8			BOLT
33					RETAINER, Front Bearing
	8350 0633	1			1984-85: With Gas Engine
	8350 1408	1			1984-85: With Diesel Engine
	8350 0633	1			1986: With Gas Engine, Transmission 8953002249 or 8953002265
	8350 2685	1			1986: With Gas Engine, Transmission 8953003385, 8953003387 or 8953004249
	8350 3112	1			1986: With Gas Engine, Transmission 8953004119, 8953004358 or 8953004359
	8350 2684	1			1986 Diesel
34	8350 0505	1			GASKET
35	8350 0501	1			SEAL, 1986

MODEL CODES

16=Cherokee 2 Dr.(1981-83)
17=Cherokee 2 Dr.(1981-83)
73=Cherokee 2WD-2 Dr.(1984-86)
74=Cherokee 2WD-4 Dr.(1984-86)
18=Cherokee 4 Dr.(1981-83)
77=Cherokee 4WD-2 Dr.(1984-86)
78=Cherokee 4WD-4 Dr.(1984-86)
85=CJ-5 (1981-83)
86=CJ-6(1981)
87=CJ-7(1981-86)
88=CJ-8, Scrambler(1981-86)
64=Comanche 2WD-6 Ft. Box(1986)
66=Comanche 2WD-7 Ft. Box(1986)
63=Comanche 4WD-6 Ft. Box(1986)
65=Comanche 4WD-7 Ft. Box(1986)
15=Grand Wagoneer 4 Dr.(1984-86)
25=J-10 Truck 7 Ft. Box(1981-84)
26=J10 Truck 8 Ft. Box(1981-86)
27=J-20 Truck 8 Ft. Box(1981-86)
15=Wagoneer 4 Dr.(1981-83)
75=Wagoneer 4WD-4 Dr.(1984-86)

BODY
CJ=CJ-5, CJ-6, CJ-7, CJ-8, Scrambler(1981-86)
MJ=Comanche Pickup(1986)

STYLES
SJ=Wagoneer(1981-83), Grand Wagoneer(1984-86), Cherokee(1981-83), J-10, J-20(1981-86)
XJ=Wagoneer(1984-86), Cherokee(1984-86)

AR = Use as Required - = Non Illustrated Part P.A.R. = Paint as Required

« RETURN TO GROUP INDEX

TRANSMISSION CASE, EXTENSION AND MISCELLANEOUS PARTS AX-4 OR AX-5 WITH TWO WHEEL DRIVE
Figure 21M-1600

81J21 1600

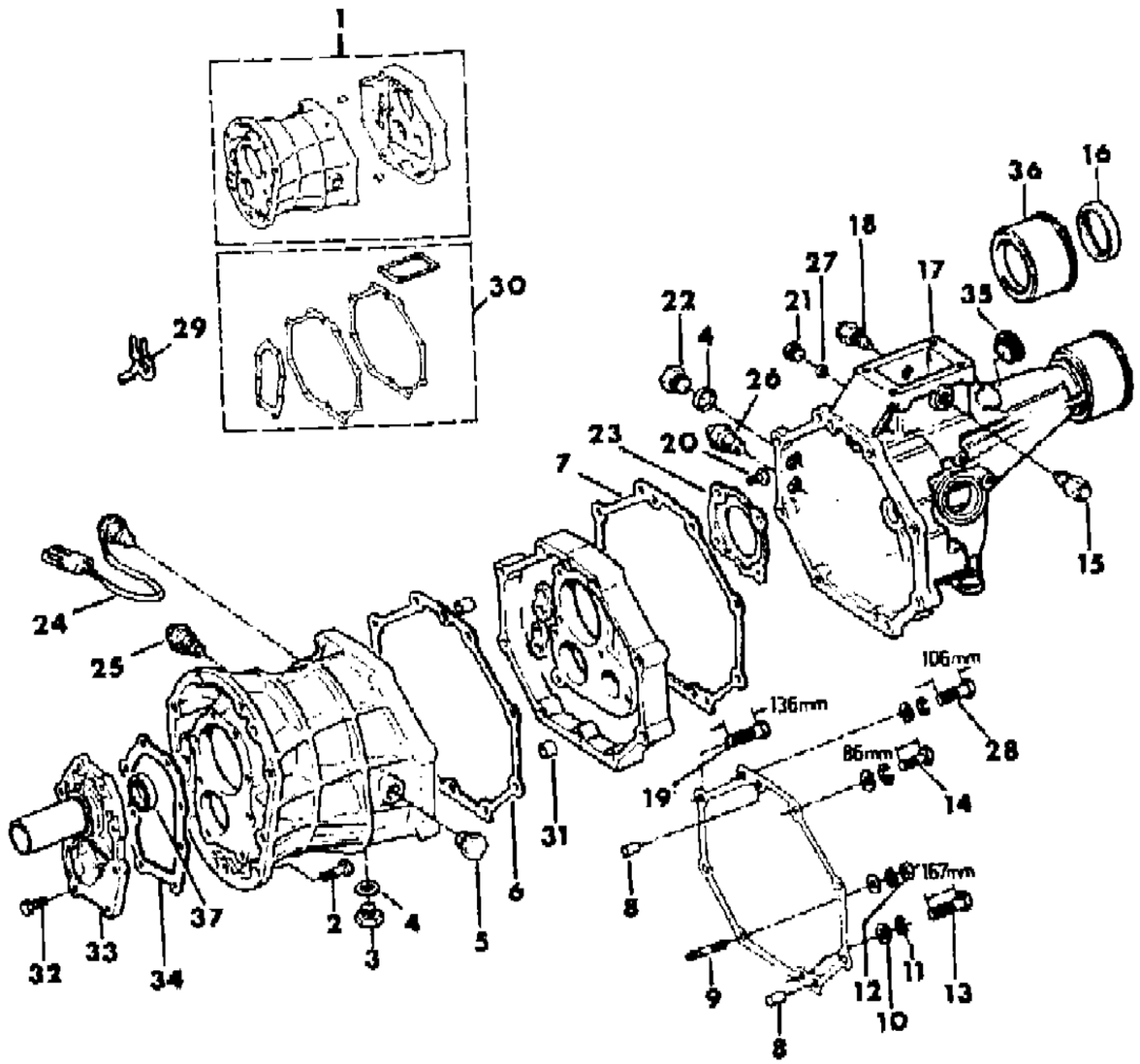

ITEM	PART NUMBER	QTY	BODY	MODEL	DESCRIPTION
1					CASE, Transmission
	8350 0502	1			With Four Speed Transmission
	8350 0634	1			With Five Speed Transmission
2	3420 1914	9			BOLT
3	8350 0512	1			PLUG, Drain
4	8350 0513	2			GASKET, Drain/Filler Plug
5	8350 0509	1			PLUG
6	8350 0506	1			GASKET, Transmission
7	8350 0507	1			GASKET, Adapter
8	8350 0504	4			PIN
9	8350 0618	1			STUD
10	8350 0627	1			WASHER
11	8350 0626	1			WASHER
12	8350 0625	1			NUT
13	8350 0617	1			BOLT
14	8350 0622	3			BOLT
15	8350 0516	1			PIN, Reverse
16	8350 2118	1			SEAL, Adapter
17					HOUSING ASSY, Extension ***
	8350 2119	1			With Four Speed Transmission
	8350 2120	1			With Five Speed Transmission
18	8350 0515	1			PIN, Reverse
19	8350 0621	1			BOLT
20	8350 0511	4			BOLT
21	8350 0628	1			PLUG, Sensor
22	8350 0623	1			PLUG, Filler
23	8350 0508	1			RETAINER
24	8350 0629	1			SWITCH, Back-up Lamp
25	5300 2831	1			SWITCH, Upshift Lamp, With Four Speed Transmission
26	5300 2831	1			SWITCH, Upshift Lamp, With Five Speed Transmission
27	3300 0322	1			GASKET
28	8350 0972	2			BOLT
29					CLAMP
	8350 0631	1			With Transmission 8953001670 or 8953001671
	8350 3551	1			With Transmission 8953004250, 8953003386, 8953003 388, 8953003023 or 8953003024
30	8350 0632	1			GASKET PACKAGE, Transmission Overhaul
31	8350 0539	2			PIN
32	8350 0510	8			BOLT

MODEL CODES
16=Cherokee 2 Dr.(1981-83)
17=Cherokee 2 Dr.(1981-83)
73=Cherokee 2WD-2 Dr.(1984-86)
74=Cherokee 2WD-4 Dr.(1984-86)
18=Cherokee 4 Dr.(1981-83)
77=Cherokee 4WD-2 Dr.(1984-86)
78=Cherokee 4WD-4 Dr.(1984-86)
85=CJ-5 (1981-83)
86=CJ-6(1981)
87=CJ-7(1981-86)
88=CJ-8, Scrambler(1981-86)
64=Comanche 2WD-6 Ft. Box(1986)
66=Comanche 2WD-7 Ft. Box(1986)
63=Comanche 4WD-6 Ft. Box(1986)
65=Comanche 4WD-7 Ft. Box(1986)
15=Grand Wagoneer 4 Dr.(1984-86)
25=J-10 Truck 7 Ft. Box(1981-84)
26=J10 Truck 8 Ft. Box(1981-86)
27=J-20 Truck 8 Ft. Box(1981-86)
15=Wagoneer 4 Dr.(1981-83)
75=Wagoneer 4WD-4 Dr.(1984-86)

BODY
CJ=CJ-5, CJ-6, CJ-7, CJ-8, Scrambler(1981-86)
MJ=Comanche Pickup(1986)

STYLES
SJ=Wagoneer(1981-83), Grand Wagoneer(1984-86), Cherokee(1981-83), J-10, J-20(1981-86)
XJ=Wagoneer(1984-86), Cherokee(1984-86)

AR = Use as Required - = Non Illustrated Part P.A.R. = Paint as Required

TRANSMISSION CASE, EXTENSION AND MISCELLANEOUS PARTS AX-4 OR AX-5 WITH TWO WHEEL DRIVE
Figure 21M-1600

81J21 1600

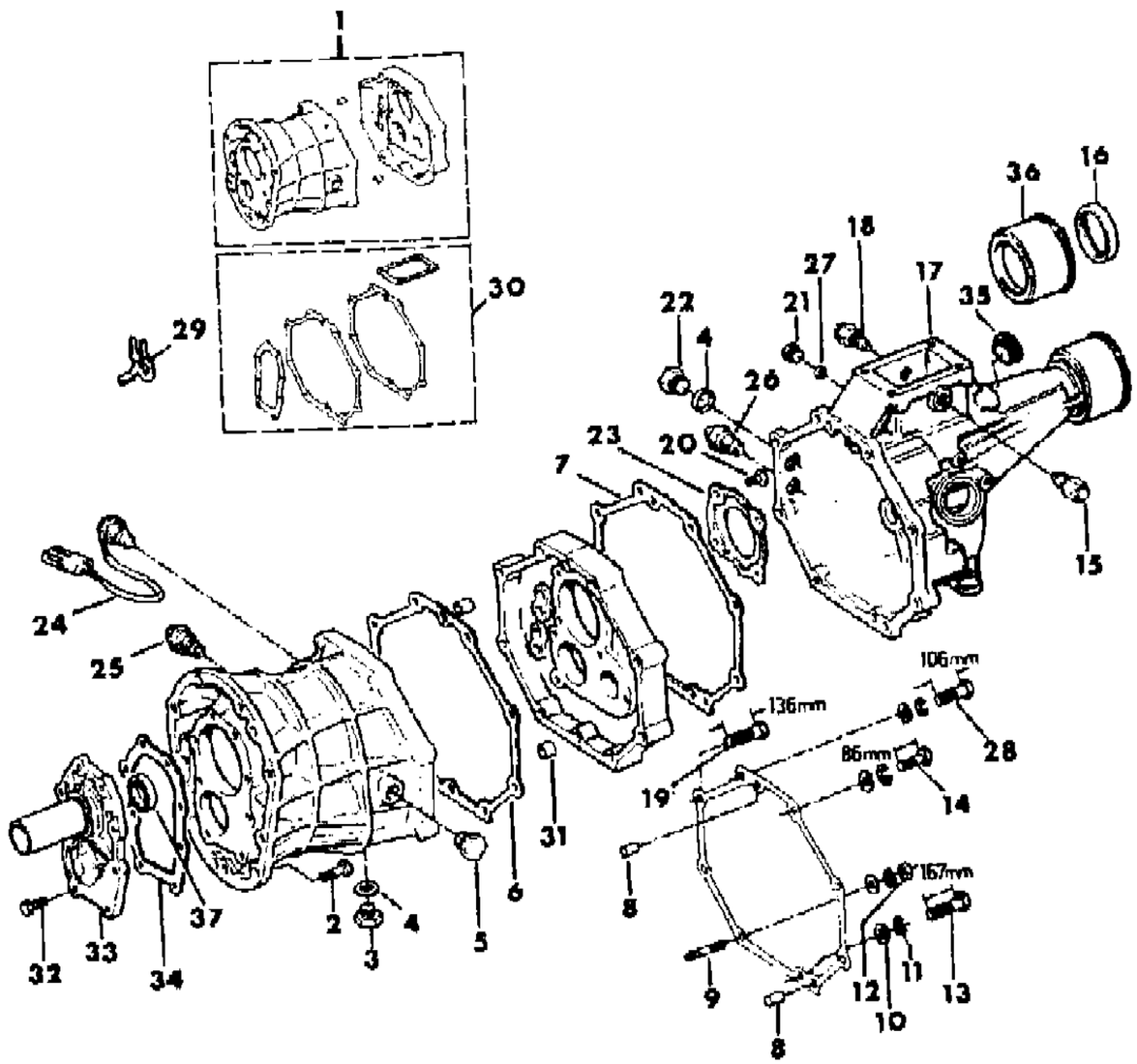

ITEM	PART NUMBER	QTY	BODY	MODEL	DESCRIPTION
33					RETAINER, Bearing Front
	8350 0633	1			1984-85: Gas
	8350 1408	1			1984-85: Diesel
	8350 0633	1			1986: With Transmission 8953001670 or 8953001671
	8350 2685	1			1986: With Transmission 8953004250, 8953003386 or 8953003388
	8350 3112	1			1986: With Transmission 8953003023 or 8953003024
	8950 2684	1			1986: Diesel
34	8350 0505	1			GASKET
35	8350 2124	1			PLUG
36	8350 2123	1			DEFLECTOR, Dust ***
37	8350 0501	1			SEAL

MODEL CODES

16=Cherokee 2 Dr.(1981-83)
17=Cherokee 2 Dr.(1981-83)
73=Cherokee 2WD-2 Dr.(1984-86)
74=Cherokee 2WD-4 Dr.(1984-86)
18=Cherokee 4 Dr.(1981-83)
77=Cherokee 4WD-2 Dr.(1984-86)
78=Cherokee 4WD-4 Dr.(1984-86)
85=CJ-5 (1981-83)
86=CJ-6(1981)
87=CJ-7(1981-86)
88=CJ-8, Scrambler(1981-86)
64=Comanche 2WD-6 Ft. Box(1986)
66=Comanche 2WD-7 Ft. Box(1986)
63=Comanche 4WD-6 Ft. Box(1986)
65=Comanche 4WD-7 Ft. Box(1986)
15=Grand Wagoneer 4 Dr.(1984-86)
25=J-10 Truck 7 Ft. Box(1981-84)
26=J10 Truck 8 Ft. Box(1981-86)
27=J-20 Truck 8 Ft. Box(1981-86)
15=Wagoneer 4 Dr.(1981-83)
75=Wagoneer 4WD-4 Dr.(1984-86)

BODY
CJ=CJ-5, CJ-6, CJ-7, CJ-8, Scrambler(1981-86)
MJ=Comanche Pickup(1986)

STYLES
SJ=Wagoneer(1981-83), Grand Wagoneer(1984-86), Cherokee(1981-83), J-10, J-20(1981-86)
XJ=Wagoneer(1984-86), Cherokee(1984-86)

AR = Use as Required - = Non Illustrated Part P.A.R. = Paint as Required

« RETURN TO GROUP INDEX

GEAR TRAIN FORWARD GEARS AX-4 OR AX-5
Figure 21M-1700

81J21 1700

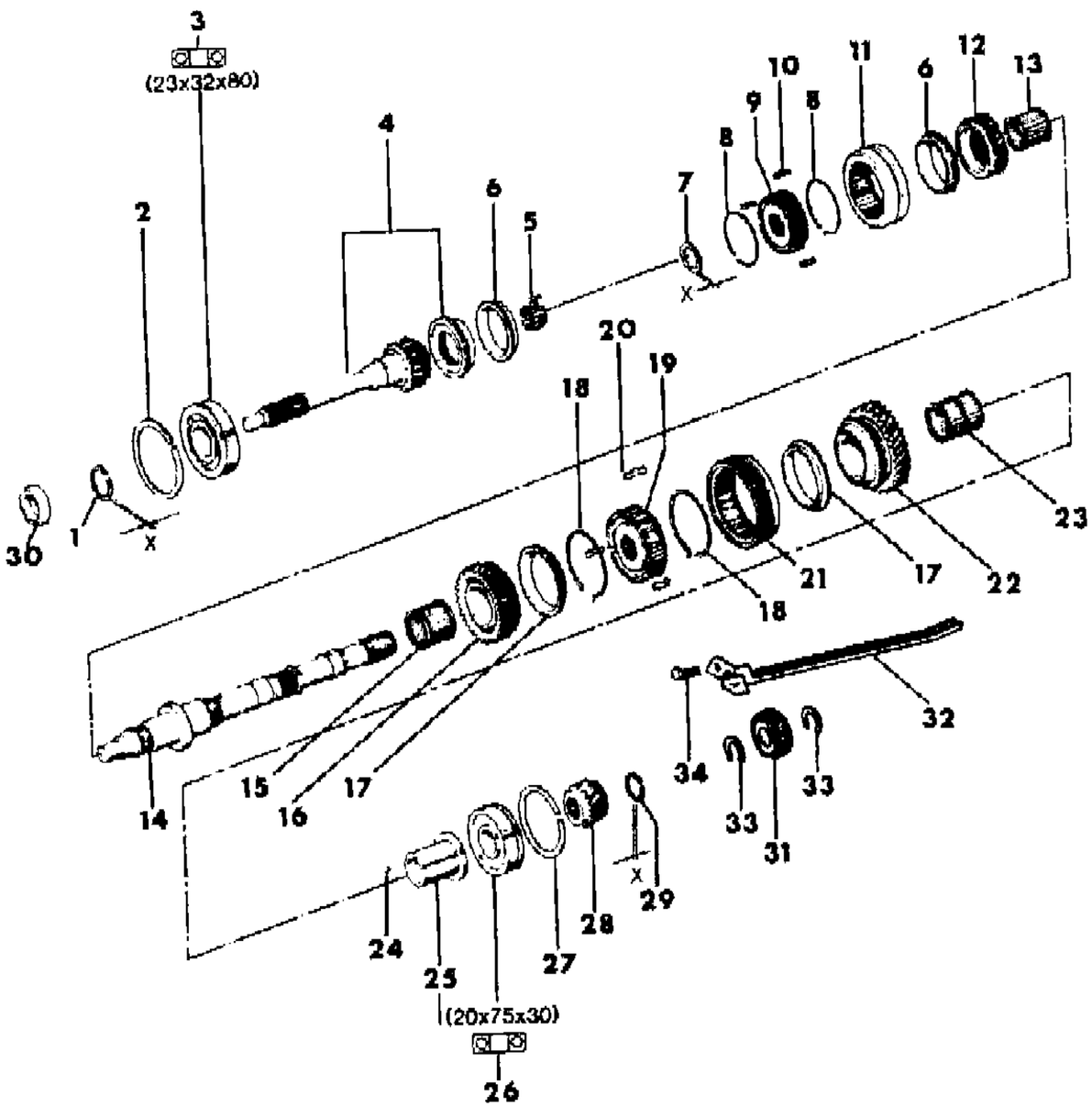

ITEM	PART NUMBER	QTY	BODY	MODEL	DESCRIPTION
1					RING, Snap
	8350 0645	AR			X=2.05mm
	8350 0607	AR			X=2.10mm
	8350 0608	AR			X=2.15mm
	8350 0609	AR			X=2.20mm
	8350 0610	AR			X=2.25mm
	8350 0611	AR			X=2.30mm
2	8350 0614	1			RING, Snap
3					BEARING, Input Shaft
	8350 0643	1			1984-85 (Stamped # NSKB-32
	8350 2681	1			1986, (Stamped w/32TM03)
4					SHAFT, Input
					GAS
	8350 0554	1			1984-85
	8350 2682	1			1986
					DIESEL
	8350 1409	1			1984-85
	8350 2683	1			1986
5					ROLLER BEARING, Input ***
	8350 0574	14			1984-85
	8350 2680	13			1986
6	8350 0566	3			RING, Synchronizer
7					RING, Snap
	8350 0598	AR			X=1.75mm
	8350 0599	AR			X=1.80mm
	8350 0602	AR			X=1.85mm
	8350 0603	AR			X=1.90mm
	8350 0604	AR			x=1.95mm
	8350 0605	AR			X=2.00mm
	8350 0606	AR			X=2.05mm
8	8350 0568	4			SPRING, Synchronizer
9	8350 0562	1			SYNCHRONIZER, 3rd And 4th Gear
10	8350 0565	3			KEY, Synchronizer
11	8350 0563	1			SLEEVE, Synchronizer
12	8350 0552	1			GEAR, Third
13	8350 0576	1			BEARING
14					SHAFT, Output
	8350 2117	1			2WD
	8350 0559	1			4WD

MODEL CODES

16=Cherokee 2 Dr.(1981-83)
17=Cherokee 2 Dr.(1981-83)
73=Cherokee 2WD-2 Dr.(1984-86)
74=Cherokee 2WD-4 Dr.(1984-86)
18=Cherokee 4 Dr.(1981-83)
77=Cherokee 4WD-2 Dr.(1984-86)
78=Cherokee 4WD-4 Dr.(1984-86)
85=CJ-5 (1981-83)
86=CJ-6(1981)
87=CJ-7(1981-86)
88=CJ-8, Scrambler(1981-86)
64=Comanche 2WD-6 Ft. Box(1986)
66=Comanche 2WD-7 Ft. Box(1986)
63=Comanche 4WD-6 Ft. Box(1986)
65=Comanche 4WD-7 Ft. Box(1986)
15=Grand Wagoneer 4 Dr.(1984-86)
25=J-10 Truck 7 Ft. Box(1981-84)
26=J10 Truck 8 Ft. Box(1981-86)
27=J-20 Truck 8 Ft. Box(1981-86)
15=Wagoneer 4 Dr.(1981-83)
75=Wagoneer 4WD-4 Dr.(1984-86)

BODY
CJ=CJ-5, CJ-6, CJ-7, CJ-8, Scrambler(1981-86)
MJ=Comanche Pickup(1986)

STYLES
SJ=Wagoneer(1981-83), Grand Wagoneer(1984-86), Cherokee(1981-83), J-10, J-20(1981-86)
XJ=Wagoneer(1984-86), Cherokee(1984-86)

AR = Use as Required - = Non Illustrated Part P.A.R. = Paint as Required

« RETURN TO GROUP INDEX »

GEAR TRAIN FORWARD GEARS AX-4 OR AX-5
Figure 21M-1700

81J21 1700

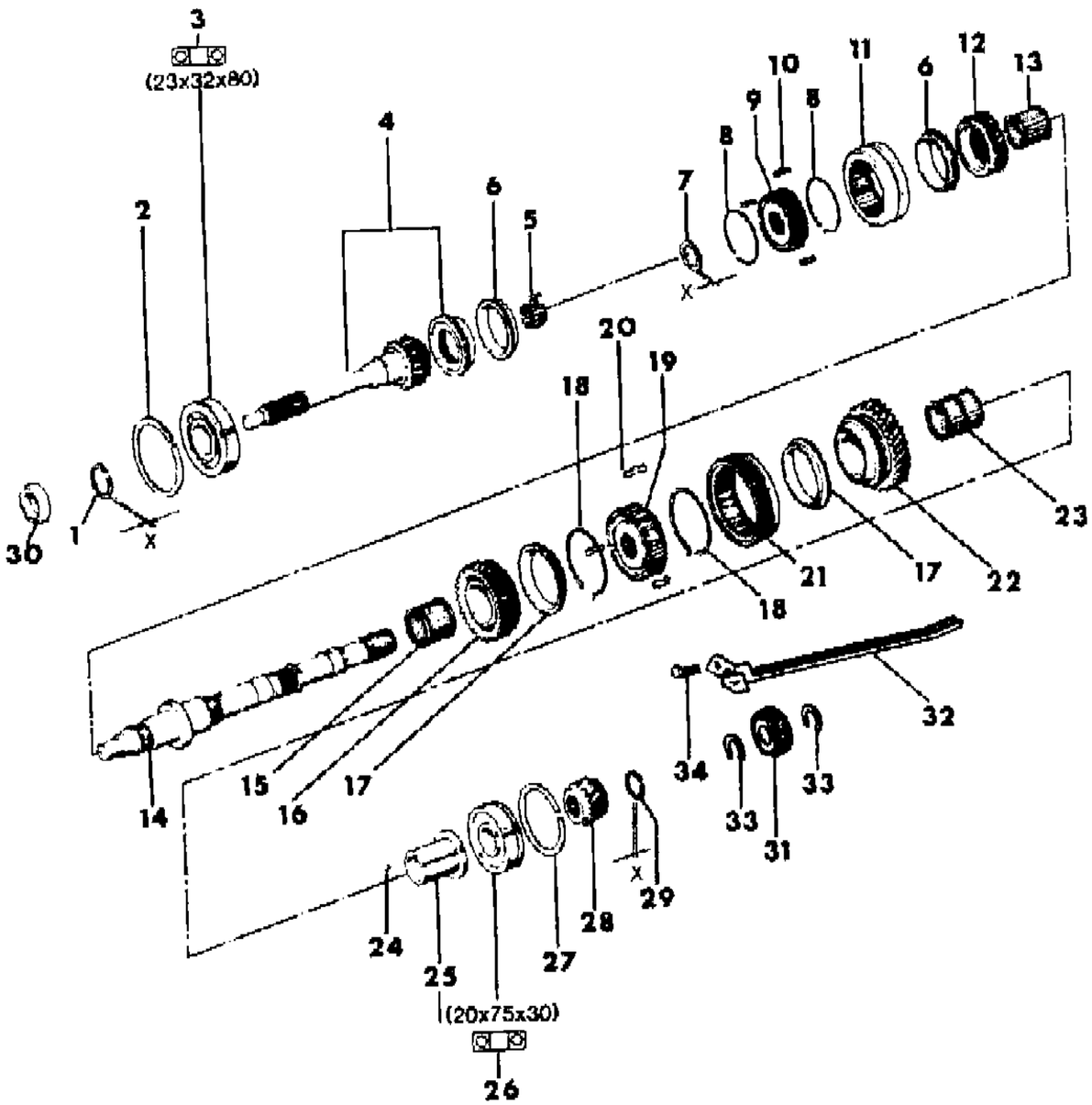

ITEM	PART NUMBER	QTY	BODY	MODEL	DESCRIPTION
15	8350 0577	1			BEARING
16	8350 0551	1			GEAR, Second
17	8350 0567	2			RING, Synchronizer
18	8350 0569	2			SPRING, Synchronizer
19	8350 0561	1			SYNCHRONIZER, 1st and 2nd Gear
20	8350 0564	3			KEY, Synchronizer
21	8350 0555	1			GEAR, Reverse
22	8350 0550	1			GEAR, First
23	8350 0578	1			BEARING
24	8350 0573	2			BALL, Reverse
25	8350 0560	1			RACE
26	8350 0575	1			BEARING
27	8350 0613	1			RING, Snap
28	8350 0971	1			GEAR, Fifth
29					RING, Snap
	8350 0587	AR			X=2.67mm
	8350 0588	AR			X=2.73mm
	8350 0589	AR			X=2.79mm
	8350 0590	AR			X=2.85mm
	8350 0591	AR			X=2.91mm
	8350 0592	AR			X=2.97mm
	8350 0593	AR			X=3.03mm
	8350 0594	AR			X=3.09mm
	8350 0595	AR			X=3.15mm
	8350 0596	AR			X=3.21mm
	8350 0597	AR			X=3.27mm
30	8350 0501	1			SEAL
31	8350 2121	1			GEAR, Speedometer Drive, 2WD
32	8350 2122	1			PIPE, Oil Receiver, 2WD ***
33	8350 2125	1			RING, Snap, 2WD
34	8350 2126	1			BOLT, 2WD

MODEL CODES

16=Cherokee 2 Dr.(1981-83)
17=Cherokee 2 Dr.(1981-83)
73=Cherokee 2WD-2 Dr.(1984-86)
74=Cherokee 2WD-4 Dr.(1984-86)
18=Cherokee 4 Dr.(1981-83)
77=Cherokee 4WD-2 Dr.(1984-86)
78=Cherokee 4WD-4 Dr.(1984-86)
85=CJ-5 (1981-83)
86=CJ-6(1981)
87=CJ-7(1981-86)
88=CJ-8, Scrambler(1981-86)
64=Comanche 2WD-6 Ft. Box(1986)
66=Comanche 2WD-7 Ft. Box(1986)
63=Comanche 4WD-6 Ft. Box(1986)
65=Comanche 4WD-7 Ft. Box(1986)
15=Grand Wagoneer 4 Dr.(1984-86)
25=J-10 Truck 7 Ft. Box(1981-84)
26=J10 Truck 8 Ft. Box(1981-86)
27=J-20 Truck 8 Ft. Box(1981-86)
15=Wagoneer 4 Dr.(1981-83)
75=Wagoneer 4WD-4 Dr.(1984-86)

BODY
CJ=CJ-5, CJ-6, CJ-7, CJ-8, Scrambler(1981-86)
MJ=Comanche Pickup(1986)

STYLES
SJ=Wagoneer(1981-83), Grand Wagoneer(1984-86), Cherokee(1981-83), J-10, J-20(1981-86)
XJ=Wagoneer(1984-86), Cherokee(1984-86)

AR = Use as Required - = Non Illustrated Part P.A.R. = Paint as Required

« RETURN TO GROUP INDEX

GEAR TRAIN REVERSE IDLER AX-4 OR AX-5
Figure 21M-1800

81J21 1800

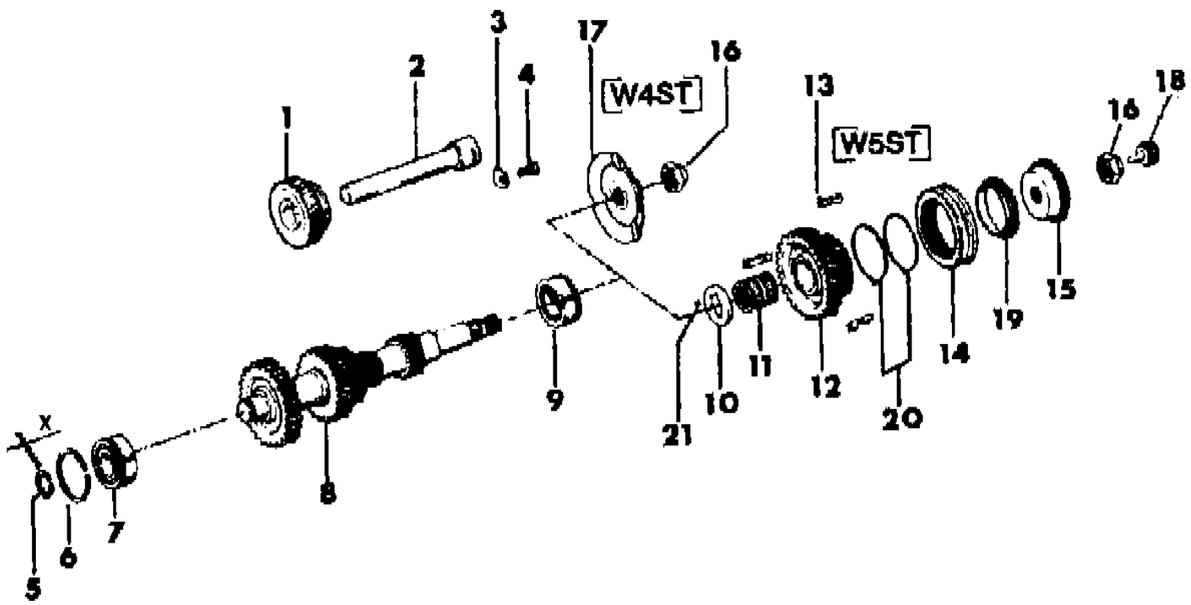

ITEM	PART NUMBER	QTY	BODY	MODEL	DESCRIPTION
1	8350 0556	1			GEAR, Reverse Idler
2	8350 0570	1			SHAFT, Reverse Idler
3	8350 0571	1			STOP
4	8350 0615	1			BOLT
5					RING, Snap
	8350 0581	AR			X=2.05mm
	8350 0582	AR			X=2.10mm
	8350 0583	AR			X=2.15mm
	8350 0584	AR			X=2.20mm
	8350 0585	AR			X=2.25mm
	8350 0586	AR			X=2.30mm
6	5350 0612	1			RING, Snap
7	8350 0579	1			BEARING, Cluster Gear
8	8350 0557	1			GEAR, Cluster
9	8350 0580	1			BEARING, Cluster Gear Rear
10	8350 0640	1			WASHER, With Five Speed Transmission
11	8350 0644	1			BEARING, With Five Speed Transmission
12	8350 0553	1			GEAR, Counter 5th, With Five Speed Transmission
13	8350 0641	3			KEY, Synchronizer, With Five Speed Transmissiobn
14	8350 0642	1			SLEEVE, Synchronizer, With Five Speed Transmission
15	8350 0639	1			GEAR, Fifth
16	8350 0572	1			NUT
17	8350 0558	1			SPACER, With Four Speed Transmission
18	8350 0646	1			FILLER, Oil, With Five Speed Transmission
19	8350 0566	3			RING, Synchronizer
20	8350 0568	4			SPRING, Synchronizer
21	8350 0573	2			BALL, Reverse

MODEL CODES
16=Cherokee 2 Dr.(1981-83)
17=Cherokee 2 Dr.(1981-83)
73=Cherokee 2WD-2 Dr.(1984-86)
74=Cherokee 2WD-4 Dr.(1984-86)
18=Cherokee 4 Dr.(1981-83)
77=Cherokee 4WD-2 Dr.(1984-86)
78=Cherokee 4WD-4 Dr.(1984-86)
85=CJ-5 (1981-83)
86=CJ-6(1981)
87=CJ-7(1981-86)
88=CJ-8, Scrambler(1981-86)
64=Comanche 2WD-6 Ft. Box(1986)
66=Comanche 2WD-7 Ft. Box(1986)
63=Comanche 4WD-6 Ft. Box(1986)
65=Comanche 4WD-7 Ft. Box(1986)
15=Grand Wagoneer 4 Dr.(1984-86)
25=J-10 Truck 7 Ft. Box(1981-84)
26=J10 Truck 8 Ft. Box(1981-86)
27=J-20 Truck 8 Ft. Box(1981-86)
15=Wagoneer 4 Dr.(1981-83)
75=Wagoneer 4WD-4 Dr.(1984-86)

BODY
CJ=CJ-5, CJ-6, CJ-7, CJ-8, Scrambler(1981-86)
MJ=Comanche Pickup(1986)

STYLES
SJ=Wagoneer(1981-83), Grand Wagoneer(1984-86), Cherokee(1981-83), J-10, J-20(1981-86)
XJ=Wagoneer(1984-86), Cherokee(1984-86)

AR = Use as Required - = Non Illustrated Part P.A.R. = Paint as Required

« RETURN TO GROUP INDEX

SHIFT FORKS, RAILS AND SHAFTS AX-4 OR AX-5
Figure 21M-1900

81J21 1900

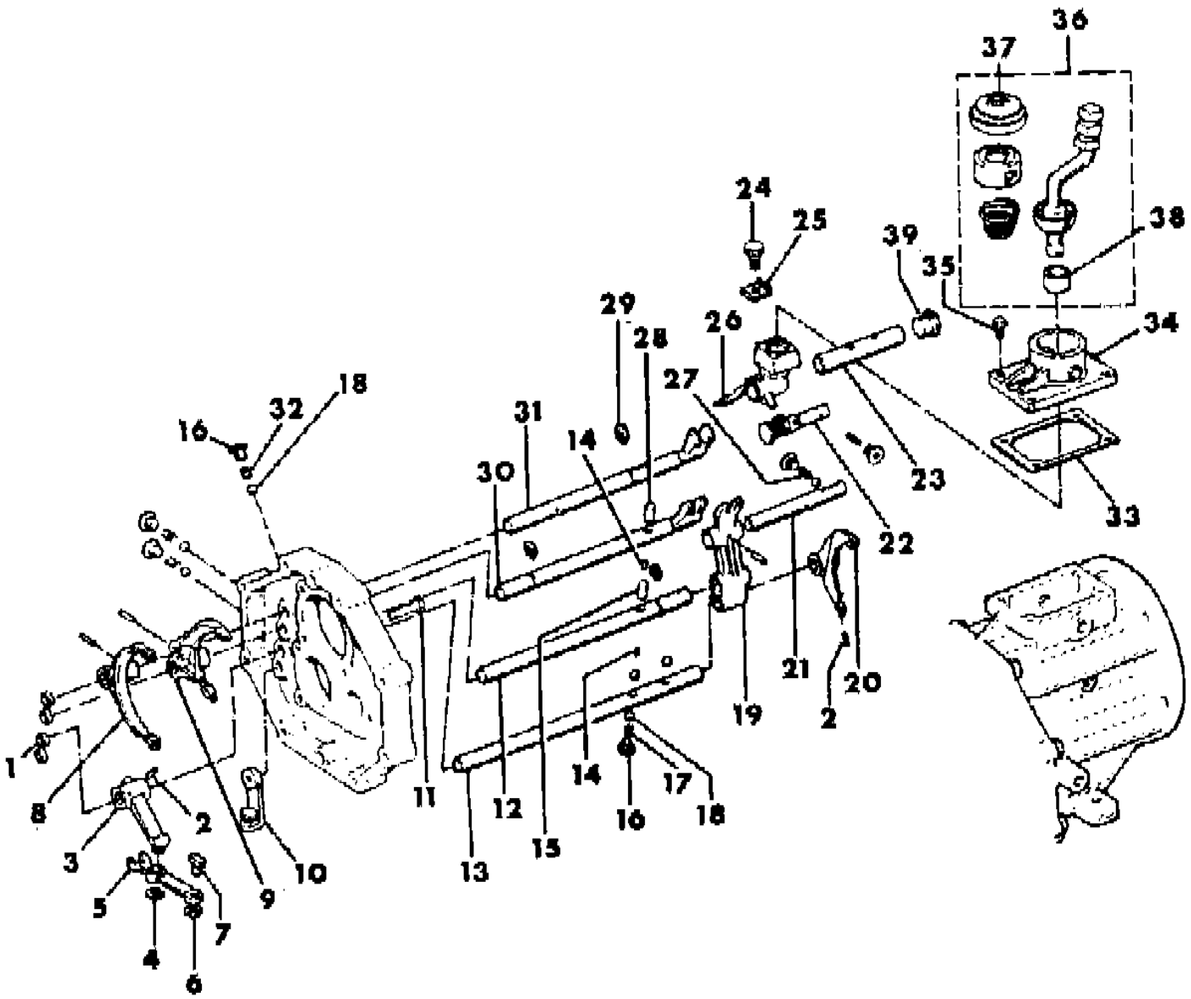

ITEM	PART NUMBER	QTY	BODY	MODEL	DESCRIPTION
1	8350 0503	4			PLUG
2	8350 0540	6			PIN (Refer Note A below)
	8350 2664	6			BOLT, Washer (Refer Note B and C Below)
3	8350 0526	1			FORK, Reverse
4	8350 0548	1			RING, Retaining
5	8350 0529	1			ARM, Reverse Shift
6	8350 0547	1			RING, Retaining
7					SHOE, Shift Arm
	8350 0530	1			(Refer Note A and B Below)
	8350 3552	1			(Refer Note C Below)
8					FORK, Gear Shift No. 2
	8350 0528	1			(Refer Note A Below)
	8350 2665	1			(Refer Note B and C Below)
9					FORK, Gear Shift No. 1
	8350 0527	1			(Refer Note A Below)
	8350 2662	1			(Refer Note B and C Below)
10	8350 0531	1			BRACKET
11	8350 0549	2			BOLT, With Washer
12					SHAFT, Gear Shift No. 3
	8350 0535	1			With Four Speed Transmission
	8350 0974	1			With Five Speed Transmission
13	8350 0538	1			SHAFT, Gear Shift No 4
14	8350 0537	4			PIN
15	8350 0541	1			ROLLER, With Five Speed Transmission
16	8350 0524	6			PLUG
17	8350 0638	1			SPRING, With Five Speed Transmission
18	8350 0542	7			BALL
19					HEAD, Reverse Shift ***
	8350 0532	1			With Four Speed Transmission, (2 Holes)
					With Five Speed Transmission, (3 Holes)
	8351 0046	1			1984-85
	8350 3553	1			1986 (C)
20	8350 0637	1			FORK, Gear Shift No. 3, (With Five Speed Transmission)
21	8350 0536	1			SHAFT, Gear Shift No. 5
22	8350 0635	1			PIN, Reverse, With Five Speed Transmission
23	8350 0514	1			SHAFT, Shift Lever
24	8350 0522	1			BOLT
25	8350 0523	1			WASHER, Lock
26	8350 0636	1			HOUSING, Shift

MODEL CODES

16=Cherokee 2 Dr.(1981-83)
17=Cherokee 2 Dr.(1981-83)
73=Cherokee 2WD-2 Dr.(1984-86)
74=Cherokee 2WD-4 Dr.(1984-86)
18=Cherokee 4 Dr.(1981-83)
77=Cherokee 4WD-2 Dr.(1984-86)
78=Cherokee 4WD-4 Dr.(1984-86)
85=CJ-5 (1981-83)
86=CJ-6(1981)
87=CJ-7(1981-86)
88=CJ-8, Scrambler(1981-86)
64=Comanche 2WD-6 Ft. Box(1986)
66=Comanche 2WD-7 Ft. Box(1986)
63=Comanche 4WD-6 Ft. Box(1986)
65=Comanche 4WD-7 Ft. Box(1986)
15=Grand Wagoneer 4 Dr.(1984-86)
25=J-10 Truck 7 Ft. Box(1981-84)
26=J10 Truck 8 Ft. Box(1981-86)
27=J-20 Truck 8 Ft. Box(1981-86)
15=Wagoneer 4 Dr.(1981-83)
75=Wagoneer 4WD-4 Dr.(1984-86)

BODY
CJ=CJ-5, CJ-6, CJ-7, CJ-8, Scrambler(1981-86)
MJ=Comanche Pickup(1986)

STYLES
SJ=Wagoneer(1981-83), Grand Wagoneer(1984-86), Cherokee(1981-83), J-10, J-20(1981-86)
XJ=Wagoneer(1984-86), Cherokee(1984-86)

AR = Use as Required - = Non Illustrated Part P.A.R. = Paint as Required

« RETURN TO GROUP INDEX »

SHIFT FORKS, RAILS AND SHAFTS AX-4 OR AX-5
Figure 21M-1900

81J21 1900

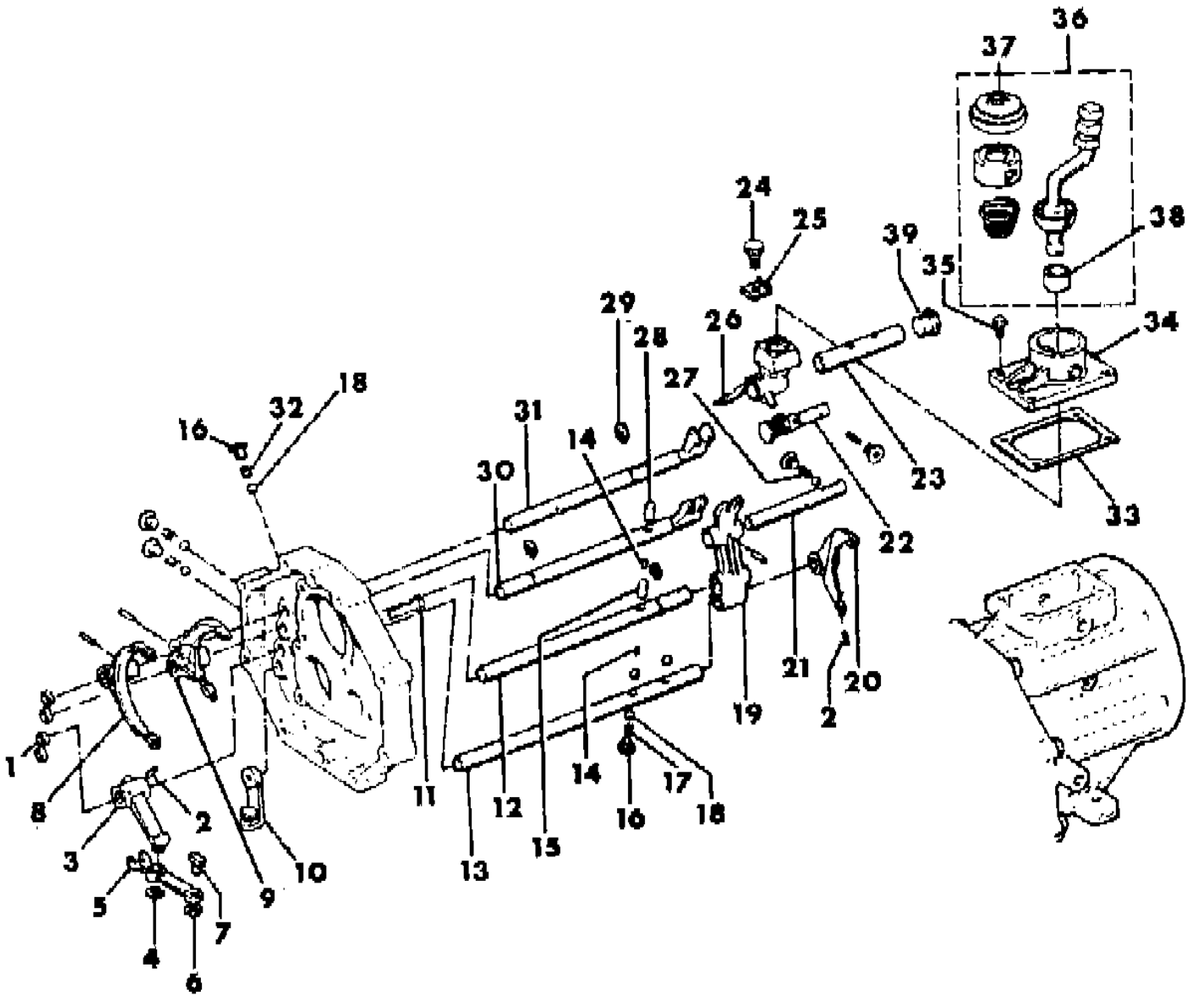

ITEM	PART NUMBER	QTY	BODY	MODEL	DESCRIPTION
27	8350 0544	1			SPRING
28	8350 0543	1			ROLLER, Shift Shaft
29	8350 0546	2			RING, Retaining
30					SHAFT, Gear Shift No. 1
	8350 0533	1			(Refer Note A Below)
	8350 2663	1			(Refer Note B and C Below)
31					SHAFT, Gear Shift No. 2
					With Four Speed Transmission
	8350 0534	1			(Refer Note A Below)
					(Refer Note B Below)
	8350 2679	1			1984-85
	8350 2666	1			1986
					With Five Speed Transmission
	8350 0973	1			(Refer Note A Below)
	8350 2667	1			(Refer Note B and C Below)
32	8350 0545	3			SPRING
33	8350 0521	1			GASKET
34	8350 0517	1			RETAINER
35	8350 0525	4			BOLT, Shift Retainer, (M8-1.25x30mm)
36					LEVER, Gear Shift
	8350 0518	1			Gas
	8350 1407	1			Diesel
37	8350 0520	1			BOOT
38	8350 0519	1			BUSHING
39	8350 0619	1			PLUG

(A) Trans Pt# 8953001671-Up to #50100909; 8953001670-Up to #50100901; 8953002265-Up to #50100423; 8953002264-Up to #50100934; 8953001190-Up to50102878(B) Trans Pt# 8983001671-After #50100909; 8953001670-After #50100901;
(C) For Trans: 8953004249; 8953004250; 8353004119. (B) Trans Pt# 8983001671-After #50100909; 8953001670-After #50100901; 8353002265-After #50100423: 8953002264-After #50100934;8953001190-After#50102878

MODEL CODES

16=Cherokee 2 Dr.(1981-83)	78=Cherokee 4WD-4 Dr.(1984-86)	64=Comanche 2WD-6 Ft. Box(1986)	25=J-10 Truck 7 Ft. Box(1981-84)
17=Cherokee 2 Dr.(1981-83)	85=CJ-5 (1981-83)	66=Comanche 2WD-7 Ft. Box(1986)	26=J10 Truck 8 Ft. Box(1981-86)
73=Cherokee 2WD-2 Dr.(1984-86)	86=CJ-6(1981)	63=Comanche 4WD-6 Ft. Box(1986)	27=J-20 Truck 8 Ft. Box(1981-86)
74=Cherokee 2WD-4 Dr.(1984-86)	87=CJ-7(1981-86)	65=Comanche 4WD-7 Ft. Box(1986)	15=Wagoneer 4 Dr.(1981-83)
18=Cherokee 4 Dr.(1981-83)	88=CJ-8, Scrambler(1981-86)	15=Grand Wagoneer 4 Dr.(1984-86)	75=Wagoneer 4WD-4 Dr.(1984-86)
77=Cherokee 4WD-2 Dr.(1984-86)			

BODY
CJ=CJ-5, CJ-6, CJ-7, CJ-8, Scrambler(1981-86)
MJ=Comanche Pickup(1986)

STYLES
SJ=Wagoneer(1981-83), Grand Wagoneer(1984-86), Cherokee(1981-83), J-10, J-20(1981-86)
XJ=Wagoneer(1984-86), Cherokee(1984-86)

AR = Use as Required - = Non Illustrated Part P.A.R. = Paint as Required

« RETURN TO GROUP INDEX

CONTROLS, GEARSHIFT T-176 OR T-177
Figure 21M-2000

81J21 2000

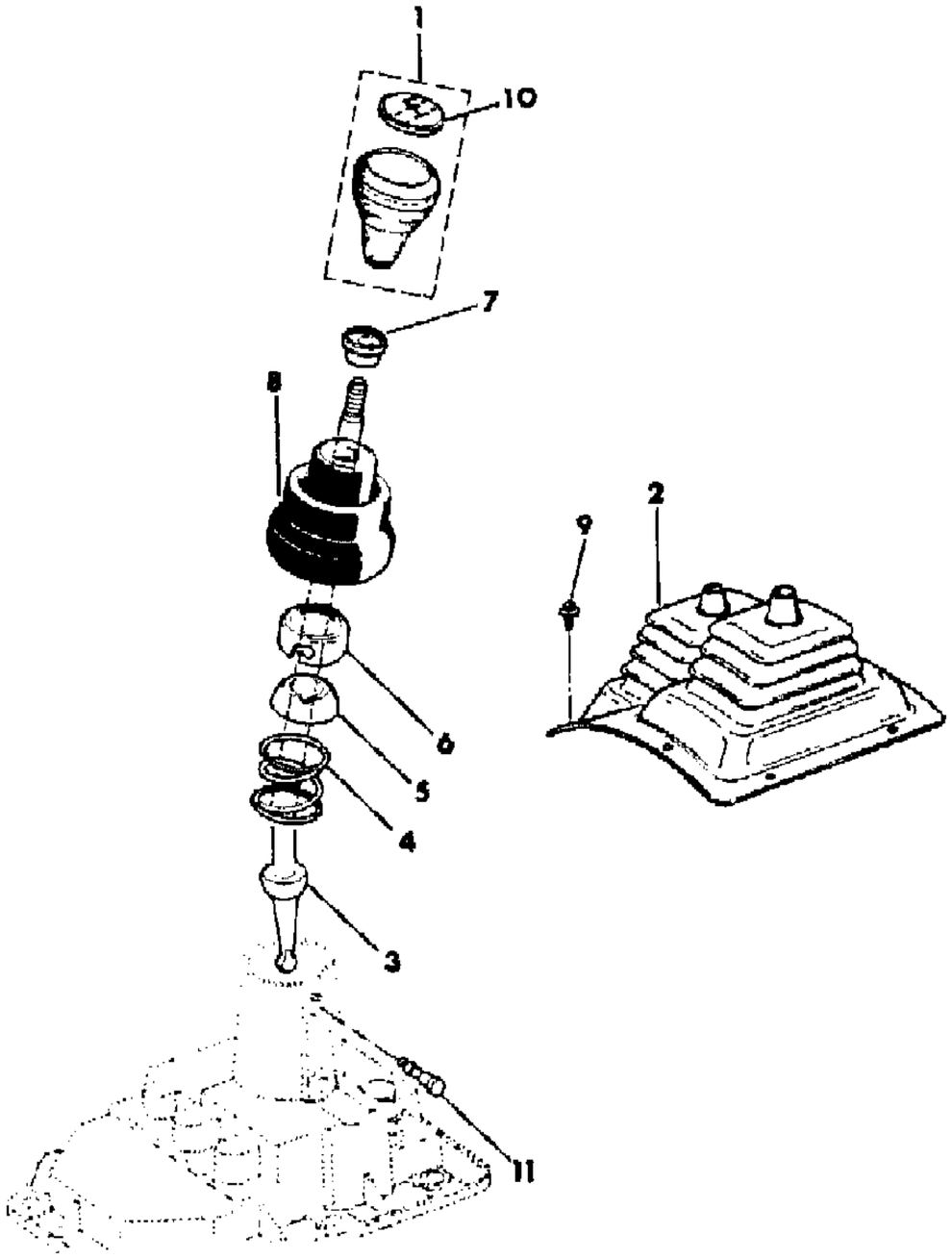

ITEM	PART NUMBER	QTY	BODY	MODEL	DESCRIPTION
1	J536 1405	1			KNOB, Shift
2					BOOT, Transmission Shift
	J575 2141	1	CJ		Black
	J575 2011	1	SJ		Black
	J576 3705	1	SJ		1983-86: Blue
	J576 3706	1	SJ		1983-86: Brown
	J576 6429	1	CJ,SJ		1985-86: Honey
	J576 3707	1	SJ		1983-86: Nutmeg
3					LEVER, Shift
					Four Cylinder
	J535 9836	1	CJ		
	J536 0079	1	CJ		EXPORT, Right Hand Drive
					Six Cylinder
	J535 9835	1	CJ		
	J536 0078	1	CJ		EXPORT, Right Hand Drive
	J535 9837	1	SJ		
					Eight Cylinder
	J535 9835	1	CJ		
	J535 9837	1	SJ		
					Diesel
	J535 9835	1	CJ		EXPORT, Left Hand Drive
	J535 0078	1	CJ		EXPORT, Right Hand Drive
4	J812 7059	1			SPRING, Shift Lever
5	J813 2420	1			RETAINER, Shift Lever Spring
6	J813 2421	1			CAP, Control Housing
7	J400 6495	1			NUT, Locking
8	J813 2422	1			COVER
9					SCREW, Boot Retaining
	J097 4764	AR	CJ		#10-16x1/2"
	J400 6633	AR	SJ		#10-16x1"
10	J324 1428	1			INSERT, Shift Knob
11	J813 2407	2			PIN

MODEL CODES

16=Cherokee 2 Dr.(1981-83)	78=Cherokee 4WD-4 Dr.(1984-86)	64=Comanche 2WD-6 Ft. Box(1986)	25=J-10 Truck 7 Ft. Box(1981-84)
17=Cherokee 2 Dr.(1981-83)	85=CJ-5 (1981-83)	66=Comanche 2WD-7 Ft. Box(1986)	26=J10 Truck 8 Ft. Box(1981-86)
73=Cherokee 2WD-2 Dr.(1984-86)	86=CJ-6(1981)	63=Comanche 4WD-6 Ft. Box(1986)	27=J-20 Truck 8 Ft. Box(1981-86)
74=Cherokee 2WD-4 Dr.(1984-86)	87=CJ-7(1981-86)	65=Comanche 4WD-7 Ft. Box(1986)	15=Wagoneer 4 Dr.(1981-83)
18=Cherokee 4 Dr.(1981-83)	88=CJ-8, Scrambler(1981-86)	15=Grand Wagoneer 4 Dr.(1984-86)	75=Wagoneer 4WD-4 Dr.(1984-86)
77=Cherokee 4WD-2 Dr.(1984-86)			

BODY
CJ=CJ-5, CJ-6, CJ-7, CJ-8, Scrambler(1981-86)
MJ=Comanche Pickup(1986)

STYLES
SJ=Wagoneer(1981-83), Grand Wagoneer(1984-86), Cherokee(1981-83), J-10, J-20(1981-86)
XJ=Wagoneer(1984-86), Cherokee(1984-86)

AR = Use as Required - = Non Illustrated Part P.A.R. = Paint as Required

« RETURN TO GROUP INDEX

CONTROLS, GEARSHIFT T-18
Figure 21M-2100

81J21 2100

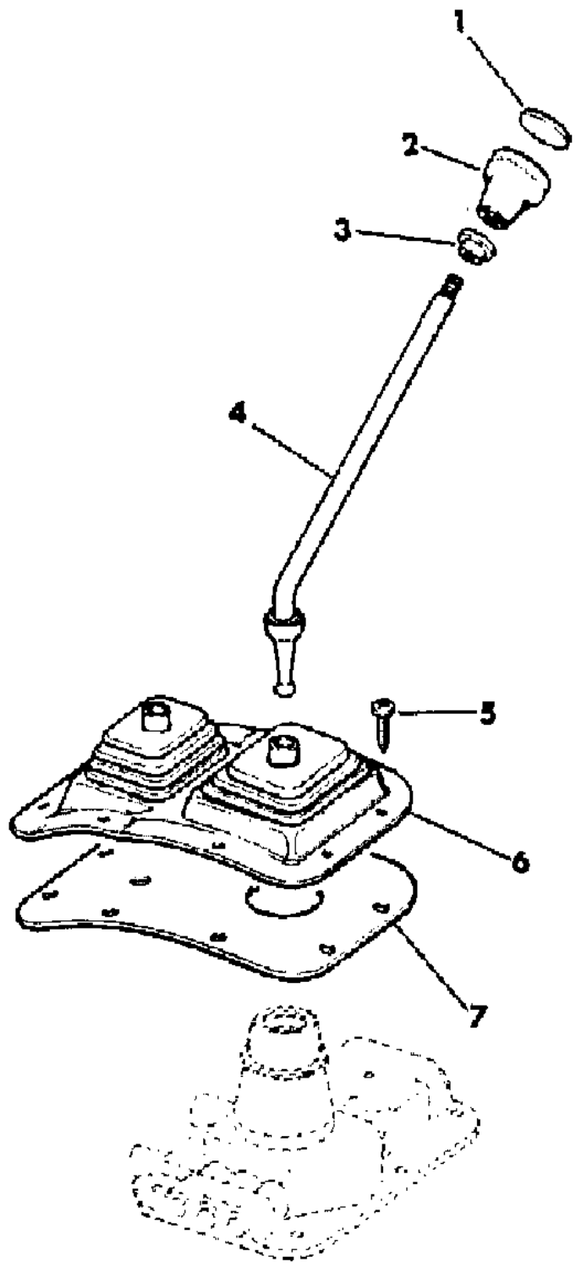

ITEM	PART NUMBER	QTY	BODY	MODEL	DESCRIPTION
1	J324 1429	1			INSERT
2	J324 1062	1			KNOB, Shift
3	J400 6495	1			NUT
4	J813 2660	1			LEVER, Manual Shift
5	J400 7056	8			SCREW
6	J575 2011	1			BOOT
7	J575 2447	1			SEAL

MODEL CODES

16=Cherokee 2 Dr.(1981-83)
17=Cherokee 2 Dr.(1981-83)
73=Cherokee 2WD-2 Dr.(1984-86)
74=Cherokee 2WD-4 Dr.(1984-86)
18=Cherokee 4 Dr.(1981-83)
77=Cherokee 4WD-2 Dr.(1984-86)
78=Cherokee 4WD-4 Dr.(1984-86)
85=CJ-5 (1981-83)
86=CJ-6(1981)
87=CJ-7(1981-86)
88=CJ-8, Scrambler(1981-86)
64=Comanche 2WD-6 Ft. Box(1986)
66=Comanche 2WD-7 Ft. Box(1986)
63=Comanche 4WD-6 Ft. Box(1986)
65=Comanche 4WD-7 Ft. Box(1986)
15=Grand Wagoneer 4 Dr.(1984-86)
25=J-10 Truck 7 Ft. Box(1981-84)
26=J10 Truck 8 Ft. Box(1981-86)
27=J-20 Truck 8 Ft. Box(1981-86)
15=Wagoneer 4 Dr.(1981-83)
75=Wagoneer 4WD-4 Dr.(1984-86)

BODY
CJ=CJ-5, CJ-6, CJ-7, CJ-8, Scrambler(1981-86)
MJ=Comanche Pickup(1986)

STYLES
SJ=Wagoneer(1981-83), Grand Wagoneer(1984-86), Cherokee(1981-83), J-10, J-20(1981-86)
XJ=Wagoneer(1984-86), Cherokee(1984-86)

AR = Use as Required - = Non Illustrated Part P.A.R. = Paint as Required

« RETURN TO GROUP INDEX

CONTROLS, GEARSHIFT SR-4
Figure 21M-2200

81J21 2200

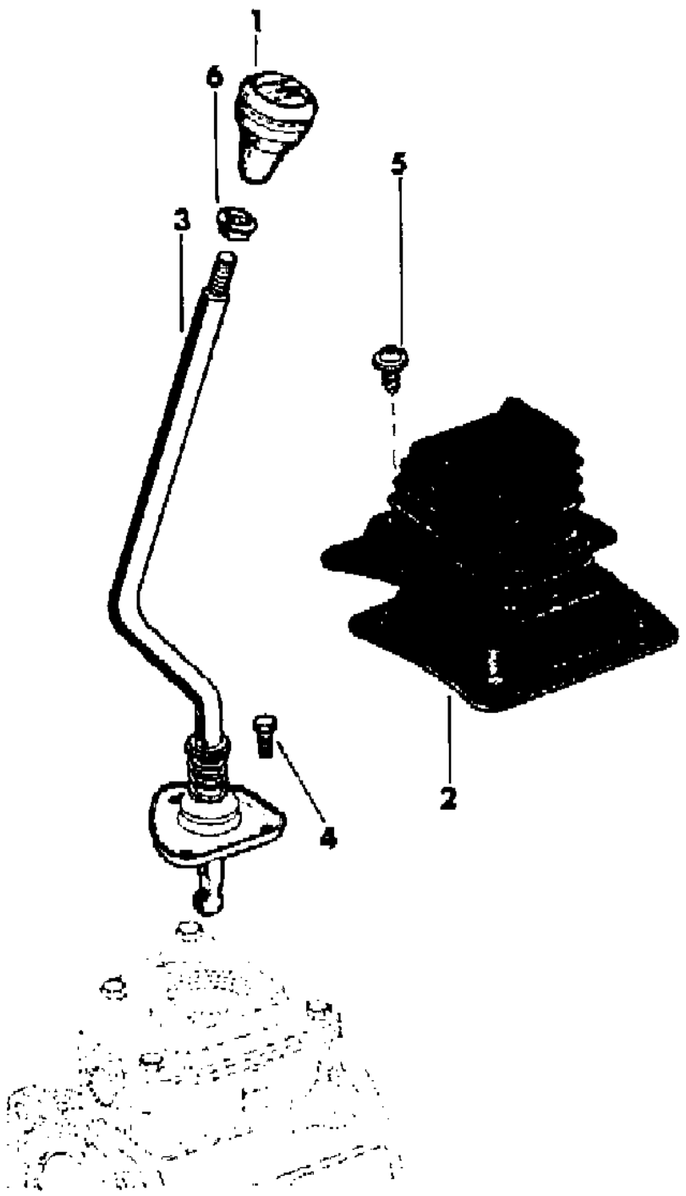

ITEM	PART NUMBER	QTY	BODY	MODEL	DESCRIPTION
1	J536 1402	1			KNOB, Shift
2	J575 2141	1			BOOT
3					LEVER, Shift
	J536 1262	1			
	J536 2128	1			EXPORT, Right Hand Drive
4	J400 0987	3			SCREW
5	J097 4764	AR			SCREW
6	J400 6195	1			NUT, Jam

MODEL CODES

16=Cherokee 2 Dr.(1981-83)
17=Cherokee 2 Dr.(1981-83)
73=Cherokee 2WD-2 Dr.(1984-86)
74=Cherokee 2WD-4 Dr.(1984-86)
18=Cherokee 4 Dr.(1981-83)
77=Cherokee 4WD-2 Dr.(1984-86)
78=Cherokee 4WD-4 Dr.(1984-86)
85=CJ-5 (1981-83)
86=CJ-6(1981)
87=CJ-7(1981-86)
88=CJ-8, Scrambler(1981-86)
64=Comanche 2WD-6 Ft. Box(1986)
66=Comanche 2WD-7 Ft. Box(1986)
63=Comanche 4WD-6 Ft. Box(1986)
65=Comanche 4WD-7 Ft. Box(1986)
15=Grand Wagoneer 4 Dr.(1984-86)
25=J-10 Truck 7 Ft. Box(1981-84)
26=J10 Truck 8 Ft. Box(1981-86)
27=J-20 Truck 8 Ft. Box(1981-86)
15=Wagoneer 4 Dr.(1981-83)
75=Wagoneer 4WD-4 Dr.(1984-86)

BODY
CJ=CJ-5, CJ-6, CJ-7, CJ-8, Scrambler(1981-86)
MJ=Comanche Pickup(1986)

STYLES
SJ=Wagoneer(1981-83), Grand Wagoneer(1984-86), Cherokee(1981-83), J-10, J-20(1981-86)
XJ=Wagoneer(1984-86), Cherokee(1984-86)

AR = Use as Required - = Non Illustrated Part P.A.R. = Paint as Required

« RETURN TO GROUP INDEX

CONTROLS, GEARSHIFT T-4 OR T-5
Figure 21M-2300

81J21 2300

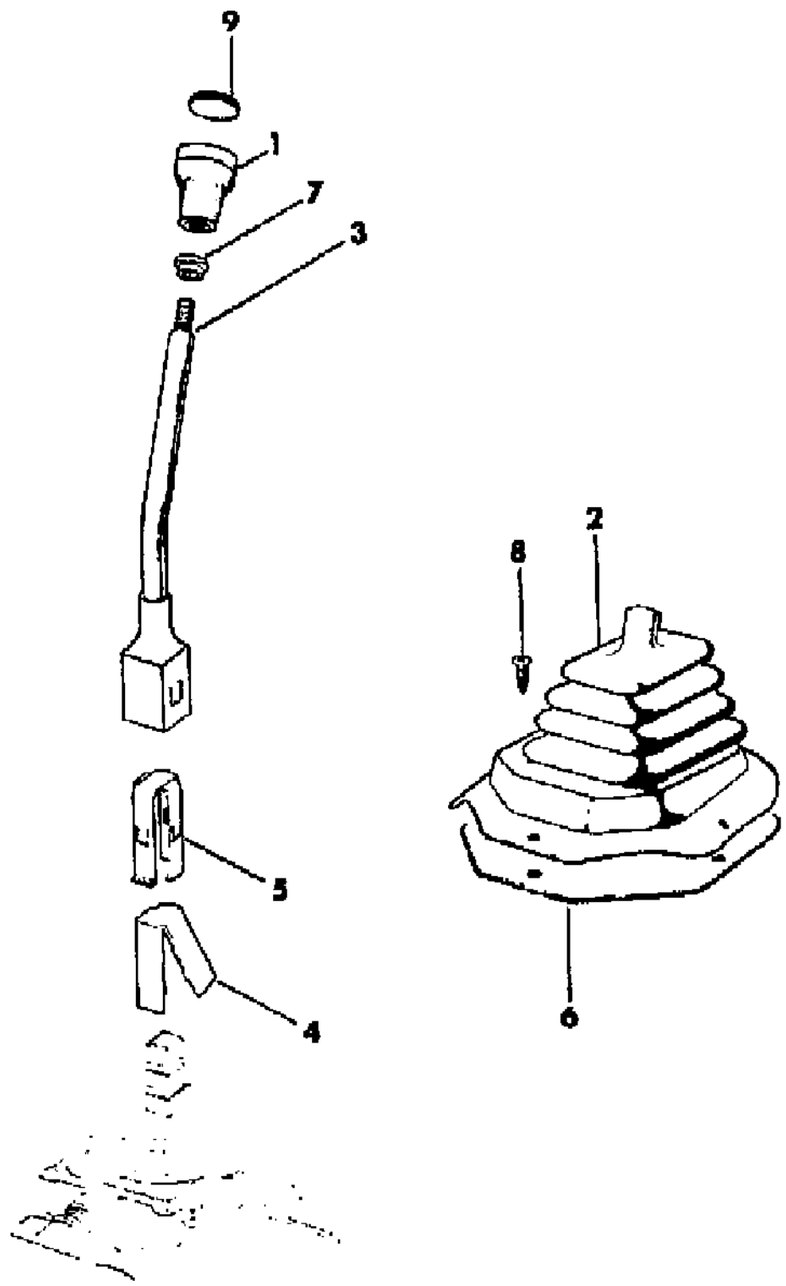

ITEM	PART NUMBER	QTY	BODY	MODEL	DESCRIPTION
1	J324 1062	1			BOOT
2					BOOT
	J575 2010	1	CJ		
	J576 1127	1	SJ		Black (1982-83)
	J576 3709	1	SJ		Blue (1983)
	J576 3710	1	SJ		Brown (1983)
	J576 3711	1	SJ		Nutmeg (1983)
3					LEVER, Shift
					Four Cylinder
	J536 3538	1	CJ		1982
	J536 4641	1	CJ		1983-86
					Six Cylinder
	J536 3538	1	CJ		
	J536 3538	1	SJ		
	J324 1071	1	SJ		EXPORT, Right Hand Drive
4	J324 1481	1			ISOLATOR ***
5	J324 1239	1			CLIP
6	J576 1245	1			GASKET
7	J400 6495	1			NUT, Jam
8	J097 4764	AR			SCREW
9					INSERT
	J324 1067	1			With Four Speed Transmission
	J324 1073	1			With Five Speed Transmission

MODEL CODES

16=Cherokee 2 Dr.(1981-83)	78=Cherokee 4WD-4 Dr.(1984-86)	64=Comanche 2WD-6 Ft. Box(1986)	25=J-10 Truck 7 Ft. Box(1981-84)
17=Cherokee 2 Dr.(1981-83)	85=CJ-5 (1981-83)	66=Comanche 2WD-7 Ft. Box(1986)	26=J10 Truck 8 Ft. Box(1981-86)
73=Cherokee 2WD-2 Dr.(1984-86)	86=CJ-6(1981)	63=Comanche 4WD-6 Ft. Box(1986)	27=J-20 Truck 8 Ft. Box(1981-86)
74=Cherokee 2WD-4 Dr.(1984-86)	87=CJ-7(1981-86)	65=Comanche 4WD-7 Ft. Box(1986)	15=Wagoneer 4 Dr.(1981-83)
18=Cherokee 4 Dr.(1981-83)	88=CJ-8, Scrambler(1981-86)	15=Grand Wagoneer 4 Dr.(1984-86)	75=Wagoneer 4WD-4 Dr.(1984-86)
77=Cherokee 4WD-2 Dr.(1984-86)			

BODY
CJ=CJ-5, CJ-6, CJ-7, CJ-8, Scrambler(1981-86)
MJ=Comanche Pickup(1986)

STYLES
SJ=Wagoneer(1981-83), Grand Wagoneer(1984-86), Cherokee(1981-83), J-10, J-20(1981-86)
XJ=Wagoneer(1984-86), Cherokee(1984-86)

AR = Use as Required - = Non Illustrated Part P.A.R. = Paint as Required

« RETURN TO GROUP INDEX

CONTROLS, GEARSHIFT AX-4 OR AX-5
Figure 21M-2400

81J21 2400

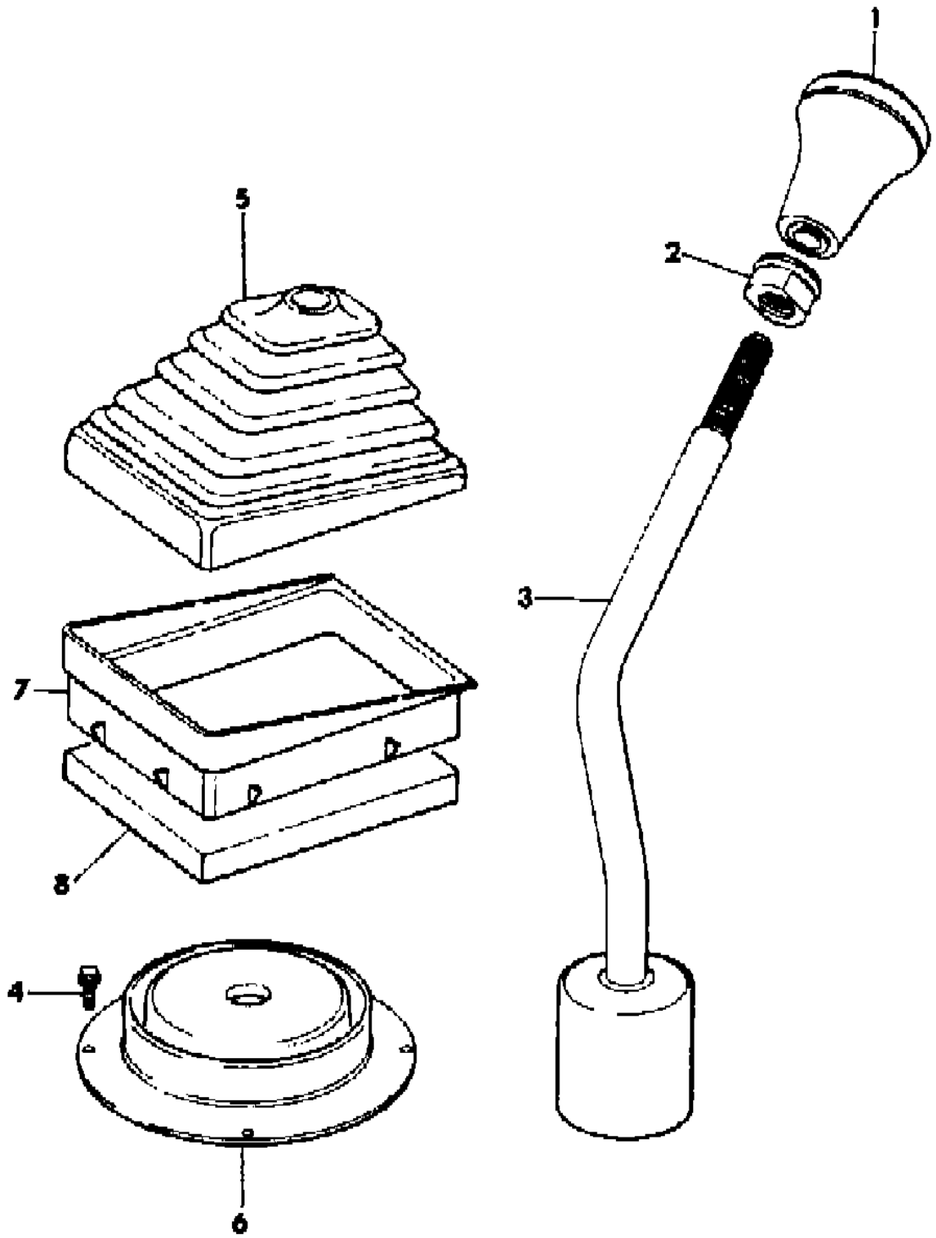

ITEM	PART NUMBER	QTY	BODY	MODEL	DESCRIPTION
1					KNOB, Shift
	5300 0604	1			With Four Speed Transmission
	5300 0605	1			With Five Speed Transmission
2	5300 0606	1			NUT
3	5300 1480	1			LEVER
4	1150 2843	4			SCREW
5	5300 0055	1			BOOT, Outer
6	5300 1553	1			BOOT, Inner
7	5300 0056	1			BEZEL, Shift
8	5300 5365	1			INSULATION, With Manual Transmission

MODEL CODES

16=Cherokee 2 Dr.(1981-83)
17=Cherokee 2 Dr.(1981-83)
73=Cherokee 2WD-2 Dr.(1984-86)
74=Cherokee 2WD-4 Dr.(1984-86)
18=Cherokee 4 Dr.(1981-83)
77=Cherokee 4WD-2 Dr.(1984-86)
78=Cherokee 4WD-4 Dr.(1984-86)
85=CJ-5 (1981-83)
86=CJ-6(1981)
87=CJ-7(1981-86)
88=CJ-8, Scrambler(1981-86)
64=Comanche 2WD-6 Ft. Box(1986)
66=Comanche 2WD-7 Ft. Box(1986)
63=Comanche 4WD-6 Ft. Box(1986)
65=Comanche 4WD-7 Ft. Box(1986)
15=Grand Wagoneer 4 Dr.(1984-86)
25=J-10 Truck 7 Ft. Box(1981-84)
26=J10 Truck 8 Ft. Box(1981-86)
27=J-20 Truck 8 Ft. Box(1981-86)
15=Wagoneer 4 Dr.(1981-83)
75=Wagoneer 4WD-4 Dr.(1984-86)

BODY
CJ=CJ-5, CJ-6, CJ-7, CJ-8, Scrambler(1981-86)
MJ=Comanche Pickup(1986)

STYLES
SJ=Wagoneer(1981-83), Grand Wagoneer(1984-86), Cherokee(1981-83), J-10, J-20(1981-86)
XJ=Wagoneer(1984-86), Cherokee(1984-86)

AR = Use as Required - = Non Illustrated Part P.A.R. = Paint as Required

« RETURN TO GROUP INDEX

CASE, EXTENSION AND MISCELLANEOUS PARTS DANA MODEL 300 TRANSFER CASE - CJ
Figure 21M-2500

81J21 2500

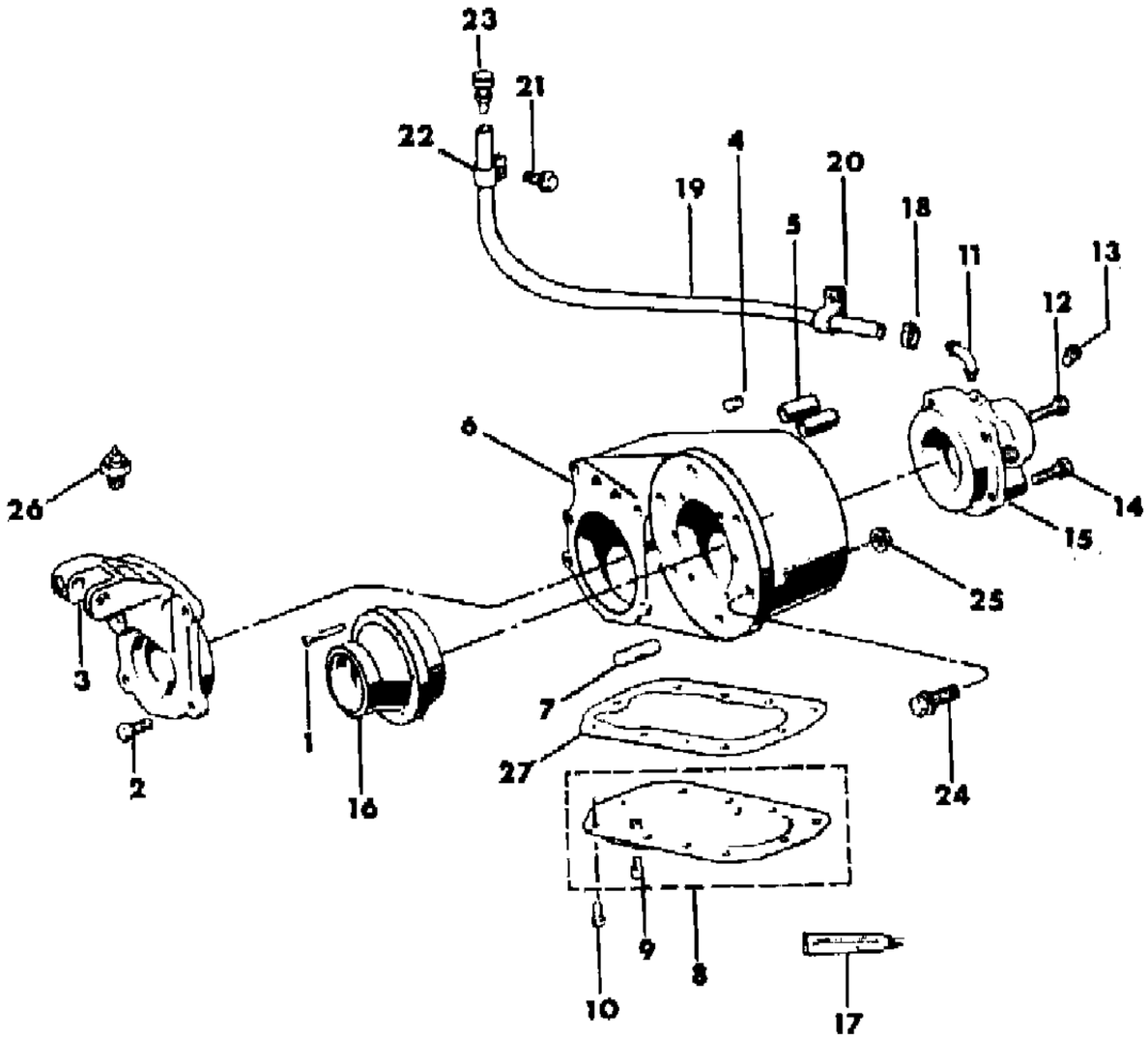

ITEM	PART NUMBER	QTY	BODY	MODEL	DESCRIPTION
1	J813 2677	6			BOLT
2	J093 7304	5			BOLT
3	J813 1671	1			CAP
4	S044 4831	1			PLUG
5	J093 4281	2			CAP
6	J813 3466	1			CASE
7	J545 5303	2			STUD
8	J813 1663	1			COVER
9	J813 1664	1			PLUG
10	J093 7298	10			BOLT
11	J813 1659	1			VENT
12	J099 8593	4			BOLT
13	JA00 0985	1			BUSHING
14	J093 7303	1			BOLT
15	8350 0445	1			CAP
16	J813 1681	1			RETAINER
17	J813 2613	1			SEALER ***
18	J322 7851	2			CLAMP
19	J812 5823	AR			HOSE
20	J012 0526	2			CLAMP
21	J812 0054	2			SCREW
22	J545 9095	2			CLAMP
23	J535 2955	1			VENT
24	J400 6684	3			BOLT
25	J400 6681	2			NUT
26	J321 1322	1			SWITCH
27	JA00 0954	1			GASKET

MODEL CODES
16=Cherokee 2 Dr.(1981-83)
17=Cherokee 2 Dr.(1981-83)
73=Cherokee 2WD-2 Dr.(1984-86)
74=Cherokee 2WD-4 Dr.(1984-86)
18=Cherokee 4 Dr.(1981-83)
77=Cherokee 4WD-2 Dr.(1984-86)
78=Cherokee 4WD-4 Dr.(1984-86)
85=CJ-5 (1981-83)
86=CJ-6(1981)
87=CJ-7(1981-86)
88=CJ-8, Scrambler(1981-86)
64=Comanche 2WD-6 Ft. Box(1986)
66=Comanche 2WD-7 Ft. Box(1986)
63=Comanche 4WD-6 Ft. Box(1986)
65=Comanche 4WD-7 Ft. Box(1986)
15=Grand Wagoneer 4 Dr.(1984-86)
25=J-10 Truck 7 Ft. Box(1981-84)
26=J10 Truck 8 Ft. Box(1981-86)
27=J-20 Truck 8 Ft. Box(1981-86)
15=Wagoneer 4 Dr.(1981-83)
75=Wagoneer 4WD-4 Dr.(1984-86)

BODY
CJ=CJ-5, CJ-6, CJ-7, CJ-8, Scrambler(1981-86)
MJ=Comanche Pickup(1986)

STYLES
SJ=Wagoneer(1981-83), Grand Wagoneer(1984-86), Cherokee(1981-83), J-10, J-20(1981-86)
XJ=Wagoneer(1984-86), Cherokee(1984-86)

AR = Use as Required - = Non Illustrated Part P.A.R. = Paint as Required

« RETURN TO GROUP INDEX

GEAR TRAIN DANA MODEL 300
Figure 21M-2600

81J21 2600

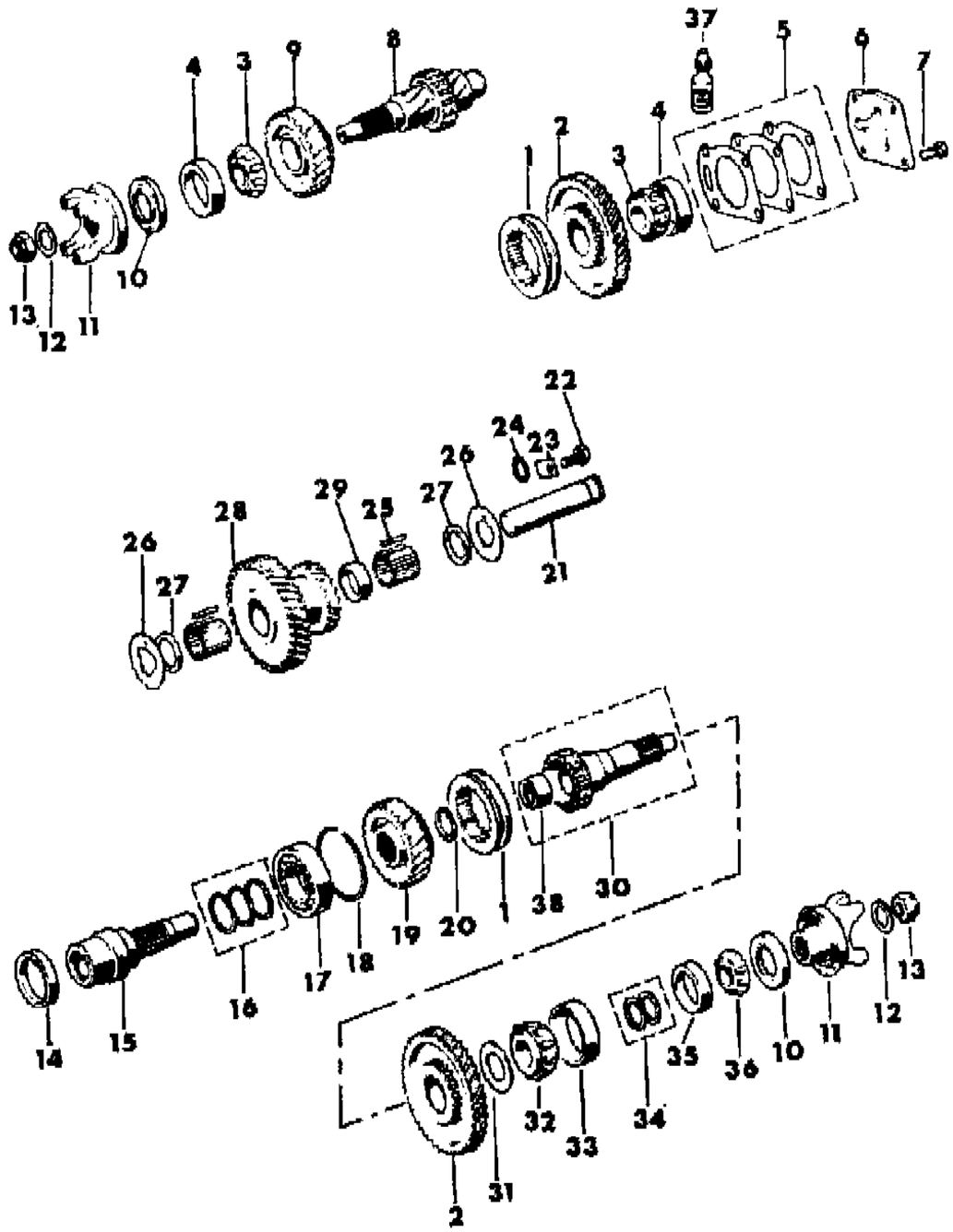

ITEM	PART NUMBER	QTY	BODY	MODEL	DESCRIPTION
1	J813 1667	2			COLLAR
2	J813 1679	2			GEAR, Drive
3	J315 6063	2			CONE, Bearing
4	J315 6062	2			CUP, Bearing
5	J813 1668	1			SHIM KIT ***
6	J813 1657	1			COVER
7	J099 8593	4			BOLT
8	J813 1660	7			SHAFT, Output
9	J813 1680	1			GEAR, Output
10	J813 1669	2			SEAL
11	J813 1656	2			YOKE
12	J400 4913	2			WASHER
13	J080 1367	2			NUT
14	J813 1684	1			SEAL
15	J813 1687	1			SHAFT, Input
16	J813 1689	1			SHIM KIT ***
17	J813 1682	1			BEARING
18	J813 1683	1			RING, Snap
19	J813 1685	1			GEAR, Input
20	J813 1686	1			RING, Snap
21	J094 2115	1			SHAFT, Intermediate
22	J094 2185	1			BOLT
23	JA00 1001	1			PLATE
24	J094 2117	1			SEAL
25	J080 9294	48			BEARING, Needle
26	J812 1813	2			WASHER, Thrust
27	J080 9295	2			SPACER
28	J813 0678	1			GEAR, Intermediate
29	J813 1661	1			SPACER
30	J813 3793	1			SHAFT, Output, Includes Speedometer Driven Gear
31	J813 1662	1			SPACER
32	J813 4239	1			CONE, Bearing
33	J005 2800	1			CUP, Bearing
34	J093 3743	1			SHIM KIT ***
35	J312 4570	1			CUP, Bearing
36	J093 3737	1			CONE, Bearing
37	J813 2614	1			SEALANT ***
38	J813 4553	1			BEARING

MODEL CODES
16=Cherokee 2 Dr.(1981-83)
17=Cherokee 2 Dr.(1981-83)
73=Cherokee 2WD-2 Dr.(1984-86)
74=Cherokee 2WD-4 Dr.(1984-86)
18=Cherokee 4 Dr.(1981-83)
77=Cherokee 4WD-2 Dr.(1984-86)
78=Cherokee 4WD-4 Dr.(1984-86)
85=CJ-5 (1981-83)
86=CJ-6(1981)
87=CJ-7(1981-86)
88=CJ-8, Scrambler(1981-86)
64=Comanche 2WD-6 Ft. Box(1986)
66=Comanche 2WD-7 Ft. Box(1986)
63=Comanche 4WD-6 Ft. Box(1986)
65=Comanche 4WD-7 Ft. Box(1986)
15=Grand Wagoneer 4 Dr.(1984-86)
25=J-10 Truck 7 Ft. Box(1981-84)
26=J10 Truck 8 Ft. Box(1981-86)
27=J-20 Truck 8 Ft. Box(1981-86)
15=Wagoneer 4 Dr.(1981-83)
75=Wagoneer 4WD-4 Dr.(1984-86)

BODY
CJ=CJ-5, CJ-6, CJ-7, CJ-8, Scrambler(1981-86)
MJ=Comanche Pickup(1986)

STYLES
SJ=Wagoneer(1981-83), Grand Wagoneer(1984-86), Cherokee(1981-83), J-10, J-20(1981-86)
XJ=Wagoneer(1984-86), Cherokee(1984-86)

AR = Use as Required - = Non Illustrated Part P.A.R. = Paint as Required

« RETURN TO GROUP INDEX

SHIFT FORKS, RAILS AND SHAFTS DANA MODEL 300
Figure 21M-2700

81J21 2700

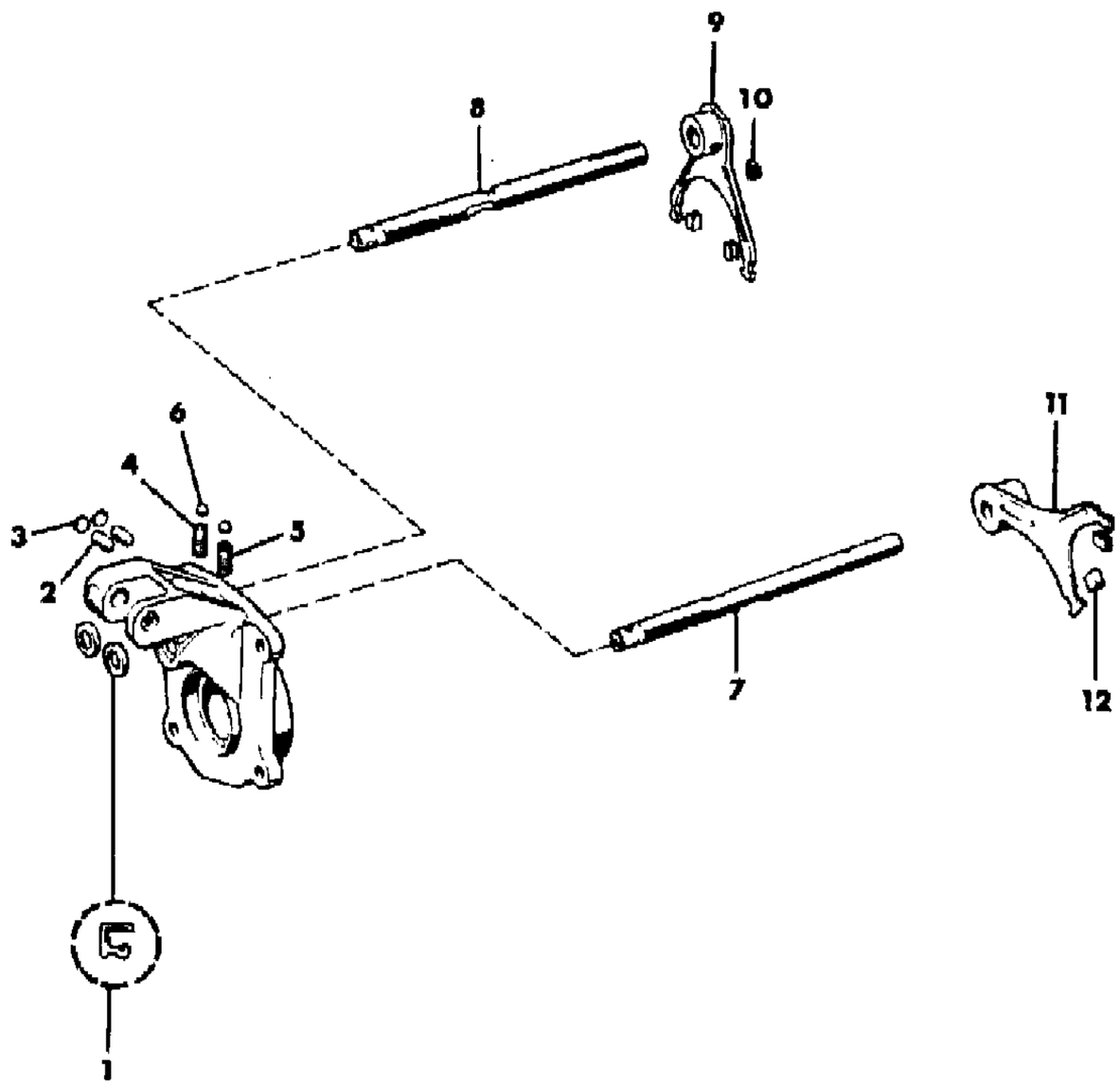

ITEM	PART NUMBER	QTY	BODY	MODEL	DESCRIPTION
1	J813 1674	2			SEAL
2	JA00 0965	2			LOCK
3	J813 1677	2			PLUG
4	J813 1676	1			SPRING
5	J813 1675	1			SPRING
6	S045 3593	2			BALL
7	J813 1672	1			ROD, Shift
8	J813 1673	1			ROD, Shift
9	J813 1665	1			FORK, Shift
10	J093 5727	2			SCREW
11	J813 1666	1			FORK, Shift
12	J813 1670	4			PAD, Shift Fork

MODEL CODES

16=Cherokee 2 Dr.(1981-83)
17=Cherokee 2 Dr.(1981-83)
73=Cherokee 2WD-2 Dr.(1984-86)
74=Cherokee 2WD-4 Dr.(1984-86)
18=Cherokee 4 Dr.(1981-83)
77=Cherokee 4WD-2 Dr.(1984-86)
78=Cherokee 4WD-4 Dr.(1984-86)
85=CJ-5 (1981-83)
86=CJ-6(1981)
87=CJ-7(1981-86)
88=CJ-8, Scrambler(1981-86)
64=Comanche 2WD-6 Ft. Box(1986)
66=Comanche 2WD-7 Ft. Box(1986)
63=Comanche 4WD-6 Ft. Box(1986)
65=Comanche 4WD-7 Ft. Box(1986)
15=Grand Wagoneer 4 Dr.(1984-86)
25=J-10 Truck 7 Ft. Box(1981-84)
26=J10 Truck 8 Ft. Box(1981-86)
27=J-20 Truck 8 Ft. Box(1981-86)
15=Wagoneer 4 Dr.(1981-83)
75=Wagoneer 4WD-4 Dr.(1984-86)

BODY
CJ=CJ-5, CJ-6, CJ-7, CJ-8, Scrambler(1981-86)
MJ=Comanche Pickup(1986)

STYLES
SJ=Wagoneer(1981-83), Grand Wagoneer(1984-86), Cherokee(1981-83), J-10, J-20(1981-86)
XJ=Wagoneer(1984-86), Cherokee(1984-86)

AR = Use as Required - = Non Illustrated Part P.A.R. = Paint as Required

« RETURN TO GROUP INDEX

CASE, EXTENSION AND MISCELLANEOUS PARTS N.P.G. MODEL 207
Figure 21M-2800

81J21 2800

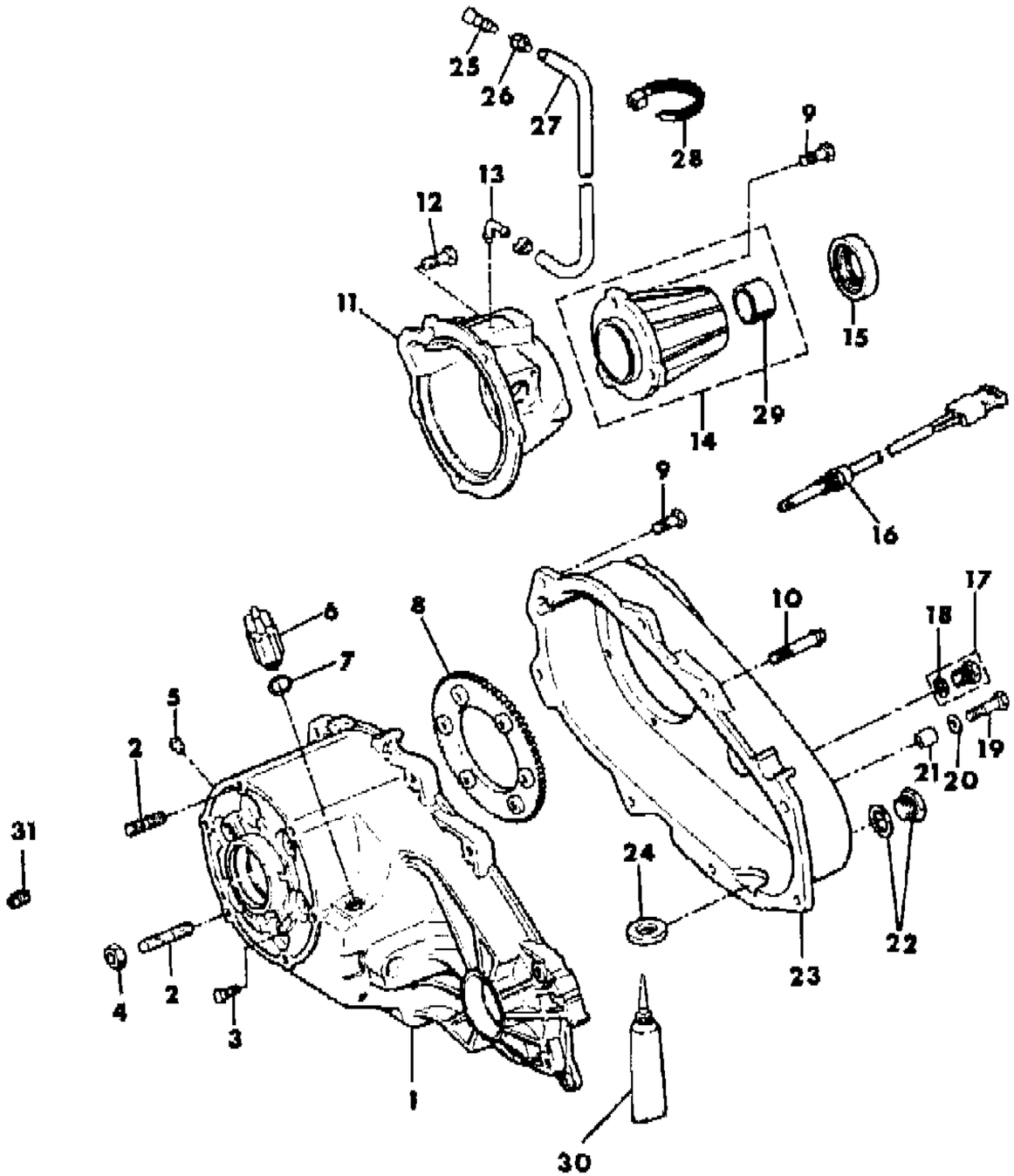

ITEM	PART NUMBER	QTY	BODY	MODEL	DESCRIPTION
1					CASE, Front
	8350 0953	1			With Manual Transmission, Transfer Case 8953001520 or 8953001521
	J813 4443	1			With Automatic Transmission, Transfer case 8953000154, 8953001221, 8953001224 or 8953001421
2					STUD
	J813 0805	AR			36mm
	8350 0952	AR			23mm
3	J813 0874	6			BOLT
4	J400 6681	AR			NUT
5	J813 1617	1			PLUG
6	5300 1101	1			SWITCH, Vacuum
7	J813 4485	1			GASKET
8	J813 0873	1			PLATE
9	J813 0984	8			BOLT
10	8350 0391	1			BOLT
11	J813 4487	1			RETAINER
12	J813 4472	5			BOLT
13	J813 0985	1			VENT
14	J813 4489	1			EXTENSION, Case
15					SEAL
	J813 4491	1			1984
	8350 1389	1			1985-86
16	5300 0376	1			SENSOR, Transfer Case Oil Level, With System Sentry
17	8350 0271	1			PLUG
18	3300 0322	1			SEAL
19	J813 0825	1			BOLT
20	J012 0394	1			WASHER
21	J813 0872	1			DOWEL
22	J813 0824	1			PLUG, Drain
23					CASE, Rear
	J813 4483	1			With System Sentry
	8350 1192	1			Without System Sentry
24	J813 0823	1			MAGNET
25	5300 0805	1			TUBE
26	J400 6047	2			CLAMP
27	5300 0807	1			TUBE
28	J322 3227	1			STRAP
29	J813 4490	1			BUSHING

MODEL CODES
16=Cherokee 2 Dr.(1981-83)
17=Cherokee 2 Dr.(1981-83)
73=Cherokee 2WD-2 Dr.(1984-86)
74=Cherokee 2WD-4 Dr.(1984-86)
18=Cherokee 4 Dr.(1981-83)
77=Cherokee 4WD-2 Dr.(1984-86)
78=Cherokee 4WD-4 Dr.(1984-86)
85=CJ-5 (1981-83)
86=CJ-6(1981)
87=CJ-7(1981-86)
88=CJ-8, Scrambler(1981-86)
64=Comanche 2WD-6 Ft. Box(1986)
66=Comanche 2WD-7 Ft. Box(1986)
63=Comanche 4WD-6 Ft. Box(1986)
65=Comanche 4WD-7 Ft. Box(1986)
15=Grand Wagoneer 4 Dr.(1984-86)
25=J-10 Truck 7 Ft. Box(1981-84)
26=J10 Truck 8 Ft. Box(1981-86)
27=J-20 Truck 8 Ft. Box(1981-86)
15=Wagoneer 4 Dr.(1981-83)
75=Wagoneer 4WD-4 Dr.(1984-86)

BODY
CJ=CJ-5, CJ-6, CJ-7, CJ-8, Scrambler(1981-86)
MJ=Comanche Pickup(1986)

STYLES
SJ=Wagoneer(1981-83), Grand Wagoneer(1984-86), Cherokee(1981-83), J-10, J-20(1981-86)
XJ=Wagoneer(1984-86), Cherokee(1984-86)

AR = Use as Required - = Non Illustrated Part P.A.R. = Paint as Required

« RETURN TO GROUP INDEX »

81J21 2800

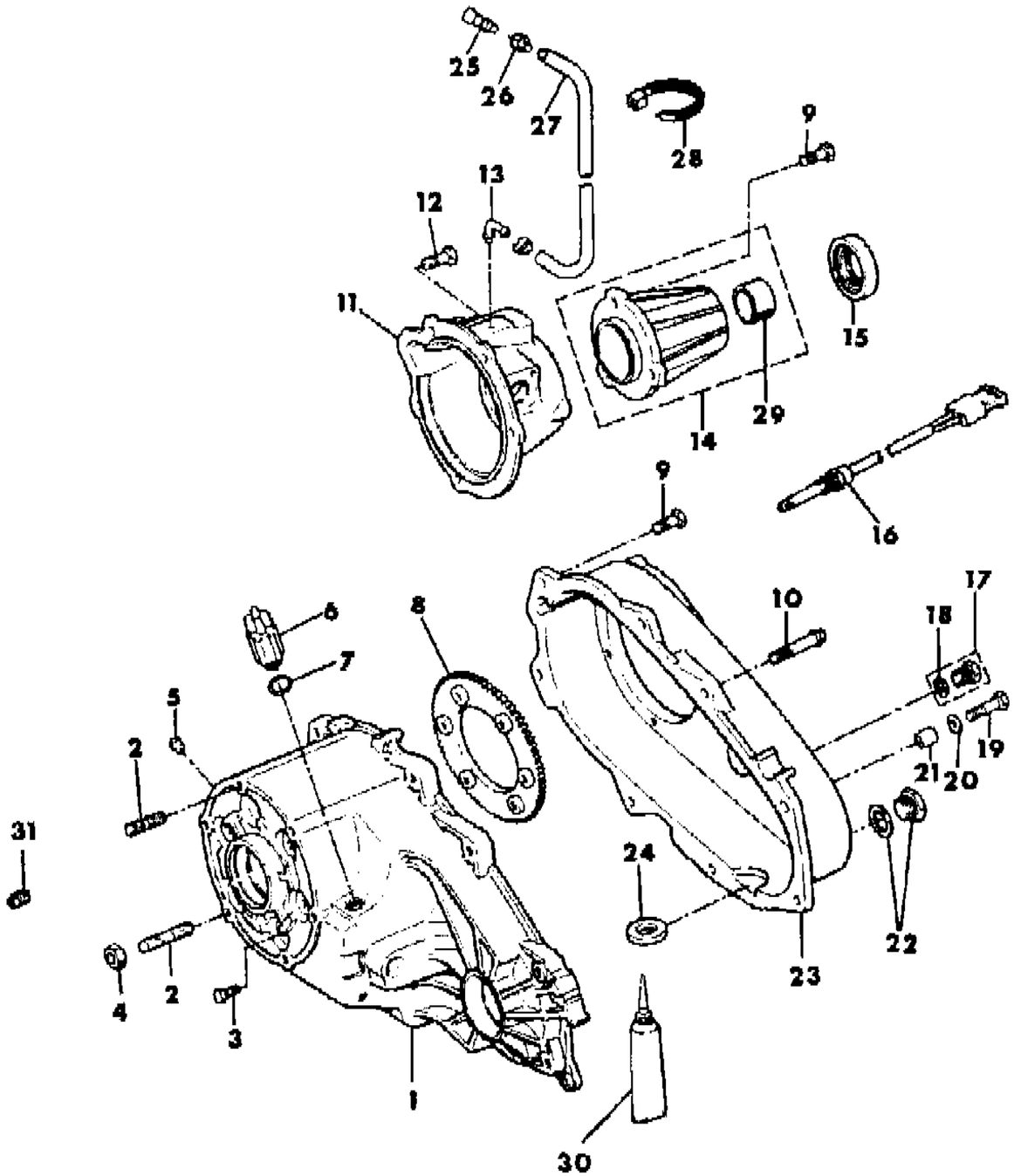

ITEM	PART NUMBER	QTY	BODY	MODEL	DESCRIPTION
30	J899 3317	AR			SEALER, RTV ***
31	5300 0502	1			PLUG

MODEL CODES
16=Cherokee 2 Dr.(1981-83)
17=Cherokee 2 Dr.(1981-83)
73=Cherokee 2WD-2 Dr.(1984-86)
74=Cherokee 2WD-4 Dr.(1984-86)
18=Cherokee 4 Dr.(1981-83)
77=Cherokee 4WD-2 Dr.(1984-86)
78=Cherokee 4WD-4 Dr.(1984-86)
85=CJ-5 (1981-83)
86=CJ-6(1981)
87=CJ-7(1981-86)
88=CJ-8, Scrambler(1981-86)
64=Comanche 2WD-6 Ft. Box(1986)
66=Comanche 2WD-7 Ft. Box(1986)
63=Comanche 4WD-6 Ft. Box(1986)
65=Comanche 4WD-7 Ft. Box(1986)
15=Grand Wagoneer 4 Dr.(1984-86)
25=J-10 Truck 7 Ft. Box(1981-84)
26=J10 Truck 8 Ft. Box(1981-86)
27=J-20 Truck 8 Ft. Box(1981-86)
15=Wagoneer 4 Dr.(1981-83)
75=Wagoneer 4WD-4 Dr.(1984-86)

BODY
CJ=CJ-5, CJ-6, CJ-7, CJ-8, Scrambler(1981-86)
MJ=Comanche Pickup(1986)

STYLES
SJ=Wagoneer(1981-83), Grand Wagoneer(1984-86), Cherokee(1981-83), J-10, J-20(1981-86)
XJ=Wagoneer(1984-86), Cherokee(1984-86)

AR = Use as Required - = Non Illustrated Part P.A.R. = Paint as Required

GEAR TRAIN N.P.G. MODEL 207
Figure 21M-2900

81J21 2900

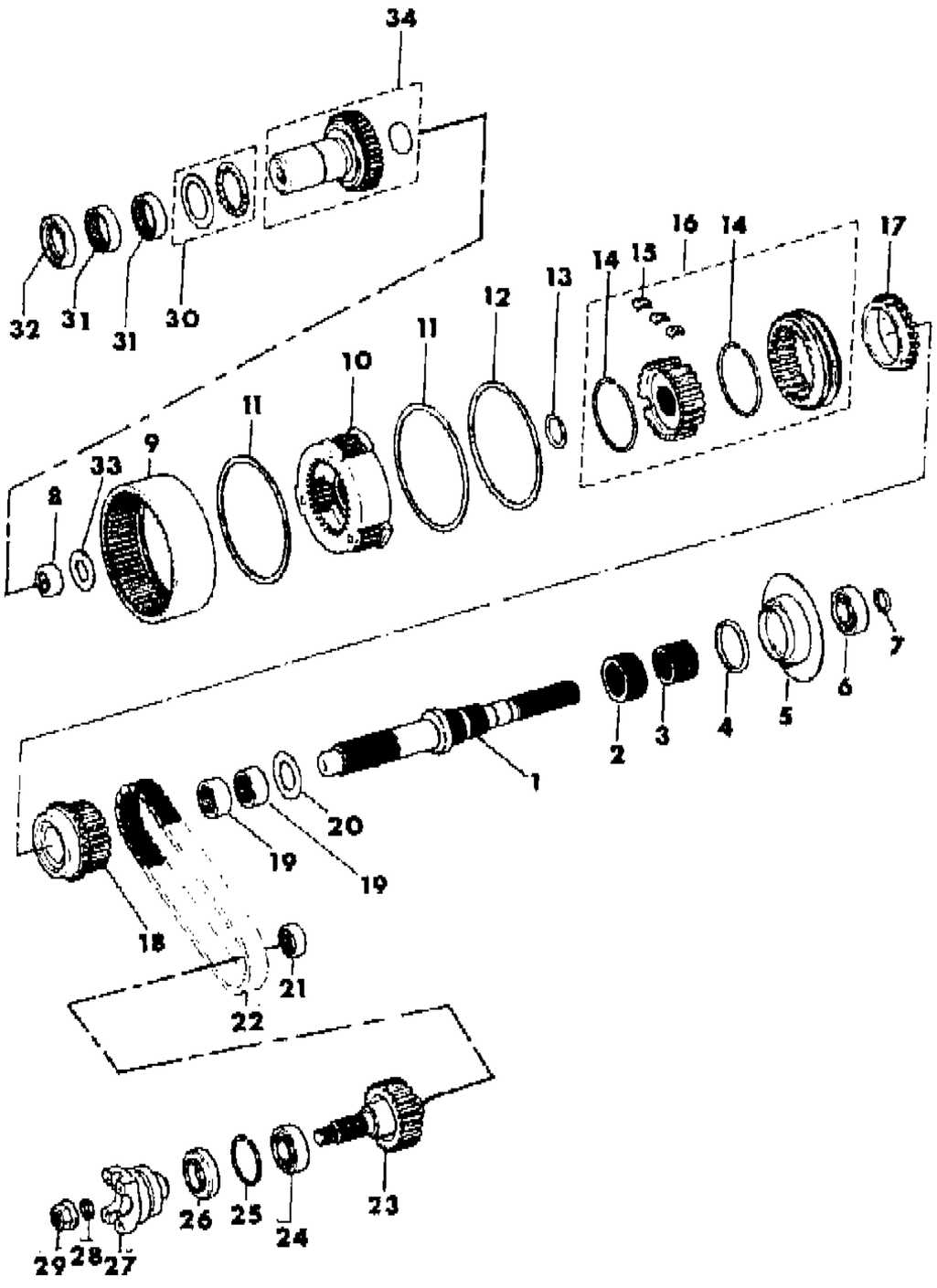

ITEM	PART NUMBER	QTY	BODY	MODEL	DESCRIPTION
1	J813 4467	1			SHAFT, Main Drive
2	J813 3645	1			PUMP, Transfer Case Oil
3	J813 4493	1			GEAR, Speedometer Drive (7 Teeth)
4	J813 0982	1			SEAL, Oil
5	J813 4486	1			HOUSING, Oil Pump
6	J813 4445	1			BEARING
7	J813 4488	1			RING
8	J813 4450	1			BEARING
9	J813 4452	1			GEAR, Transfer Case Annulus
10	J813 4455	1			GEAR, Planetary
11	J813 4456	2			RING, Thrust
12	J813 4454	1			RING, Retaining
13	J813 4481	1			RING, Retaining
14	8350 0991	2			SPRING
15	8350 0990	3			STRUT, Synchronizer
16	J813 4480	1			SYNCHRONIZER, Mode Shift
17	8350 0992	1			RING, Stop
18	J813 4468	1			SPROCKET, Drive
19	J813 4469	2			BEARING
20	J813 4470	1			WASHER, Thrust
21	J813 4484	1			BEARING
22	J813 4471	1			CHAIN, Drive
23	J813 4482	1			SHAFT, Output
24	J813 4445	1			BEARING
25	J813 4447	1			RING, Retaining
26	J813 4446	1			SEAL, Oil
27					FLANGE, With Slinger
	5300 0906	1			With Transfer Case 8953003735 or 8953003738
	8350 2644	1			With Transfer Case 8953003390 or 8953003559
28	J813 4474	1			WASHER
29	J813 4475	1			NUT
30	J813 4451	1			BEARING PACKAGE ***
31	J813 4444	2			BEARING
32	J535 9457				SEAL, Oil
33	8350 0993	1			WASHER, Thrust
34					GEAR, Input
	8350 0951	1			With Manual Transmission (21 Teeth)
	J813 4495	1			With Automatic Transmission (23 Teeth)

MODEL CODES

16=Cherokee 2 Dr.(1981-83)
17=Cherokee 2 Dr.(1981-83)
73=Cherokee 2WD-2 Dr.(1984-86)
74=Cherokee 2WD-4 Dr.(1984-86)
18=Cherokee 4 Dr.(1981-83)
77=Cherokee 4WD-2 Dr.(1984-86)
78=Cherokee 4WD-4 Dr.(1984-86)
85=CJ-5 (1981-83)
86=CJ-6(1981)
87=CJ-7(1981-86)
88=CJ-8, Scrambler(1981-86)
64=Comanche 2WD-6 Ft. Box(1986)
66=Comanche 2WD-7 Ft. Box(1986)
63=Comanche 4WD-6 Ft. Box(1986)
65=Comanche 4WD-7 Ft. Box(1986)
15=Grand Wagoneer 4 Dr.(1984-86)
25=J-10 Truck 7 Ft. Box(1981-84)
26=J10 Truck 8 Ft. Box(1981-86)
27=J-20 Truck 8 Ft. Box(1981-86)
15=Wagoneer 4 Dr.(1981-83)
75=Wagoneer 4WD-4 Dr.(1984-86)

BODY
CJ=CJ-5, CJ-6, CJ-7, CJ-8, Scrambler(1981-86)
MJ=Comanche Pickup(1986)

STYLES
SJ=Wagoneer(1981-83), Grand Wagoneer(1984-86), Cherokee(1981-83), J-10, J-20(1981-86)
XJ=Wagoneer(1984-86), Cherokee(1984-86)

AR = Use as Required - = Non Illustrated Part P.A.R. = Paint as Required

« RETURN TO GROUP INDEX

SHIFT FORKS, RAILS AND SHAFTS N.P.G. MODEL 207
Figure 21M-3000

81J21 3000

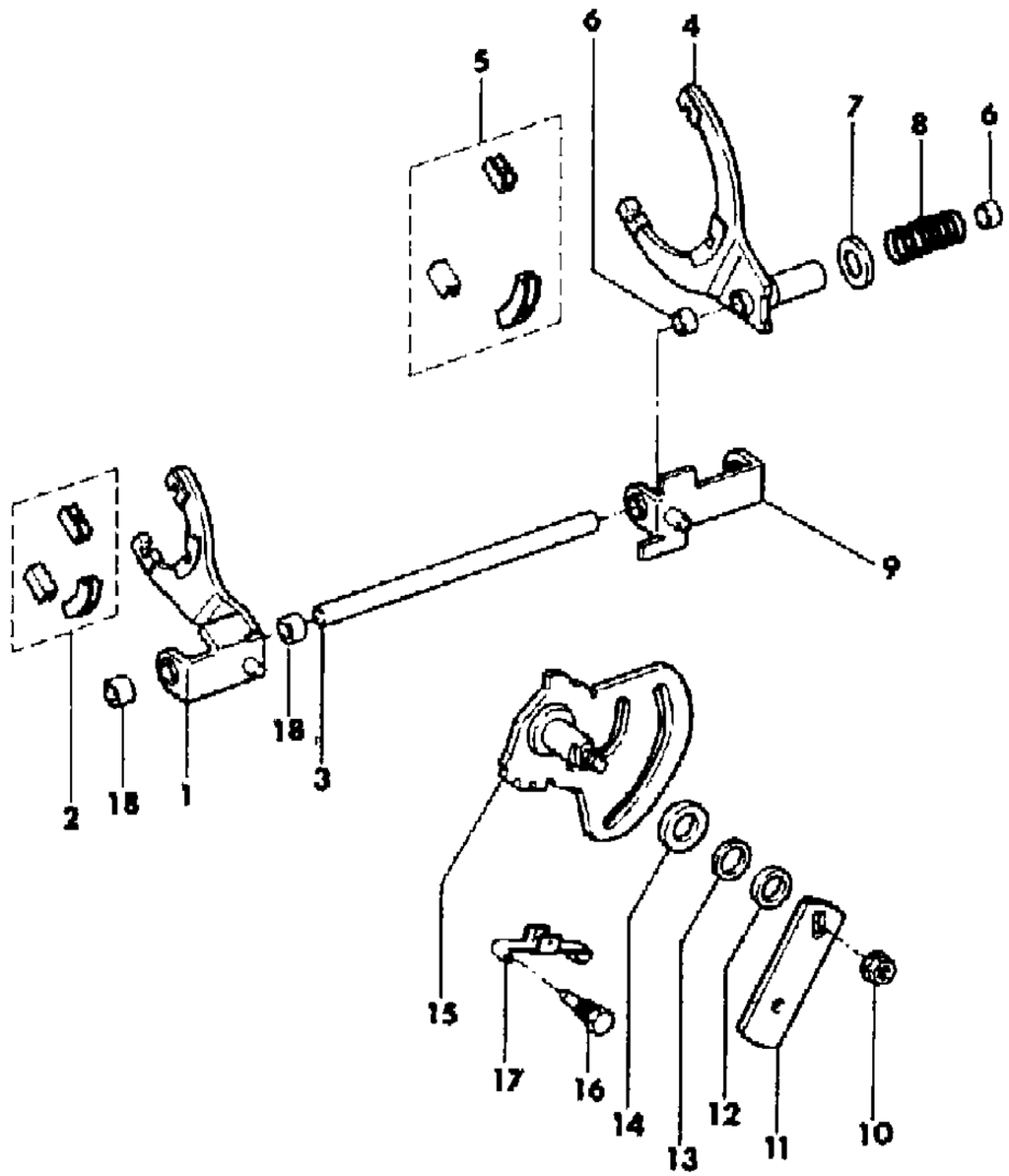

ITEM	PART NUMBER	QTY	BODY	MODEL	DESCRIPTION
1	J813 4459	1			FORK, Range Shift
2	8350 0994	1			PAD PACKAGE, Shift Fork ***
3	J813 4466	1			RAIL, Transfer Case Shift
4	J813 4461	1			FORK, Mode Shift
5	J813 4279	1			PAD PACKAGE, Shift Fork ***
6	J813 4465	2			BUSHING
7	J813 4464	1			CUP
8	J813 4463	1			SPRING
9	J813 4462	1			BRACKET, Shift
10	J813 4477	1			NUT
11					LEVER, Transfer Case Shift
	J813 4476	1			1984-85
	5300 3356	1			1986
12	J813 0854	1			O-RING
13	J813 0853	1			SEAL
14	J813 4458	1			SPACER
15	J813 4457	1			SPECTOR, With Shaft ***
16	J813 4449	1			SCREW, Dog Point
17	J813 4448	1			SPRING, Sector Shift
18	J813 4460	2			BUSHING

MODEL CODES

16=Cherokee 2 Dr.(1981-83)
17=Cherokee 2 Dr.(1981-83)
73=Cherokee 2WD-2 Dr.(1984-86)
74=Cherokee 2WD-4 Dr.(1984-86)
18=Cherokee 4 Dr.(1981-83)
77=Cherokee 4WD-2 Dr.(1984-86)
78=Cherokee 4WD-4 Dr.(1984-86)
85=CJ-5 (1981-83)
86=CJ-6(1981)
87=CJ-7(1981-86)
88=CJ-8, Scrambler(1981-86)
64=Comanche 2WD-6 Ft. Box(1986)
66=Comanche 2WD-7 Ft. Box(1986)
63=Comanche 4WD-6 Ft. Box(1986)
65=Comanche 4WD-7 Ft. Box(1986)
15=Grand Wagoneer 4 Dr.(1984-86)
25=J-10 Truck 7 Ft. Box(1981-84)
26=J10 Truck 8 Ft. Box(1981-86)
27=J-20 Truck 8 Ft. Box(1981-86)
15=Wagoneer 4 Dr.(1981-83)
75=Wagoneer 4WD-4 Dr.(1984-86)

BODY
CJ=CJ-5, CJ-6, CJ-7, CJ-8, Scrambler(1981-86)
MJ=Comanche Pickup(1986)

STYLES
SJ=Wagoneer(1981-83), Grand Wagoneer(1984-86), Cherokee(1981-83), J-10, J-20(1981-86)
XJ=Wagoneer(1984-86), Cherokee(1984-86)

AR = Use as Required - = Non Illustrated Part P.A.R. = Paint as Required

« RETURN TO GROUP INDEX

CASE, EXTENSION AND MISCELLANEOUS PARTS N.P.G. MODEL 208
Figure 21M-3100

81J21 3100

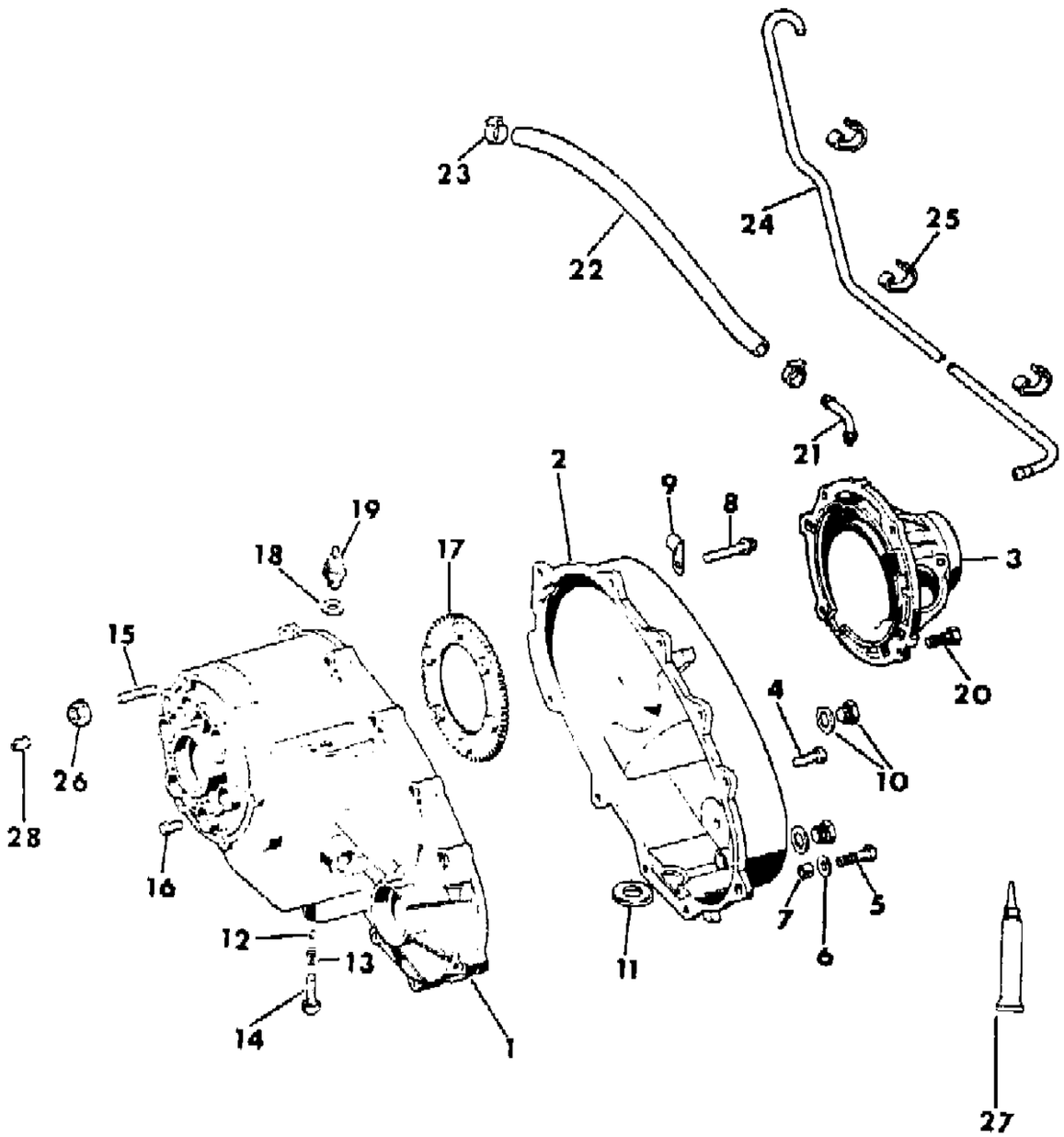

ITEM	PART NUMBER	QTY	BODY	MODEL	DESCRIPTION
1	J813 0867	1			CASE, Front
2	J813 0978	1			CASE, Rear
3	J813 0983	1			RETAINER
4	J813 0810	6			BOLT
5	1150 0831	2			BOLT
6	J400 1104	2			WASHER
7	J813 0872	2			DOWEL
8	J813 0979	1			BOLT
9	J813 0980	1			CUP
10	J813 0824	2			PLUG
11	J813 0823	1			MAGNET
12	8350 1349	1			BALL
13	J813 0856	1			SPRING
14	J813 0857	1			BOLT
15	J813 0805	6			STUD
16	J813 0874	6			BOLT
17	J813 0873	1			PLATE
18	J813 0830	1			WASHER
19	J813 0829	1			SWITCH
20	J813 0984	4			BOLT
21	J813 1659	1			VENT
22	J812 5823	1			HOSE, (Bulk)
23	J400 6047	2			CLAMP
24					TUBE
	J536 3389	1			With Six Cylinder
	J536 1519	1			With Eight Cylinder
25	J313 7319	3			CLIP
26	J400 6681	6			NUT
27	J899 3317	1			SEALER, RTV ***
28	5300 0502	1			PLUG

MODEL CODES
16=Cherokee 2 Dr.(1981-83)
17=Cherokee 2 Dr.(1981-83)
73=Cherokee 2WD-2 Dr.(1984-86)
74=Cherokee 2WD-4 Dr.(1984-86)
18=Cherokee 4 Dr.(1981-83)
77=Cherokee 4WD-2 Dr.(1984-86)
78=Cherokee 4WD-4 Dr.(1984-86)
85=CJ-5 (1981-83)
86=CJ-6(1981)
87=CJ-7(1981-86)
88=CJ-8, Scrambler(1981-86)
64=Comanche 2WD-6 Ft. Box(1986)
66=Comanche 2WD-7 Ft. Box(1986)
63=Comanche 4WD-6 Ft. Box(1986)
65=Comanche 4WD-7 Ft. Box(1986)
15=Grand Wagoneer 4 Dr.(1984-86)
25=J-10 Truck 7 Ft. Box(1981-84)
26=J10 Truck 8 Ft. Box(1981-86)
27=J-20 Truck 8 Ft. Box(1981-86)
15=Wagoneer 4 Dr.(1981-83)
75=Wagoneer 4WD-4 Dr.(1984-86)

BODY
CJ=CJ-5, CJ-6, CJ-7, CJ-8, Scrambler(1981-86)
MJ=Comanche Pickup(1986)

STYLES
SJ=Wagoneer(1981-83), Grand Wagoneer(1984-86), Cherokee(1981-83), J-10, J-20(1981-86)
XJ=Wagoneer(1984-86), Cherokee(1984-86)

AR = Use as Required - = Non Illustrated Part P.A.R. = Paint as Required

« RETURN TO GROUP INDEX

GEAR TRAIN N.P.G. MODEL 208
Figure 21M-3200

81J21 3200

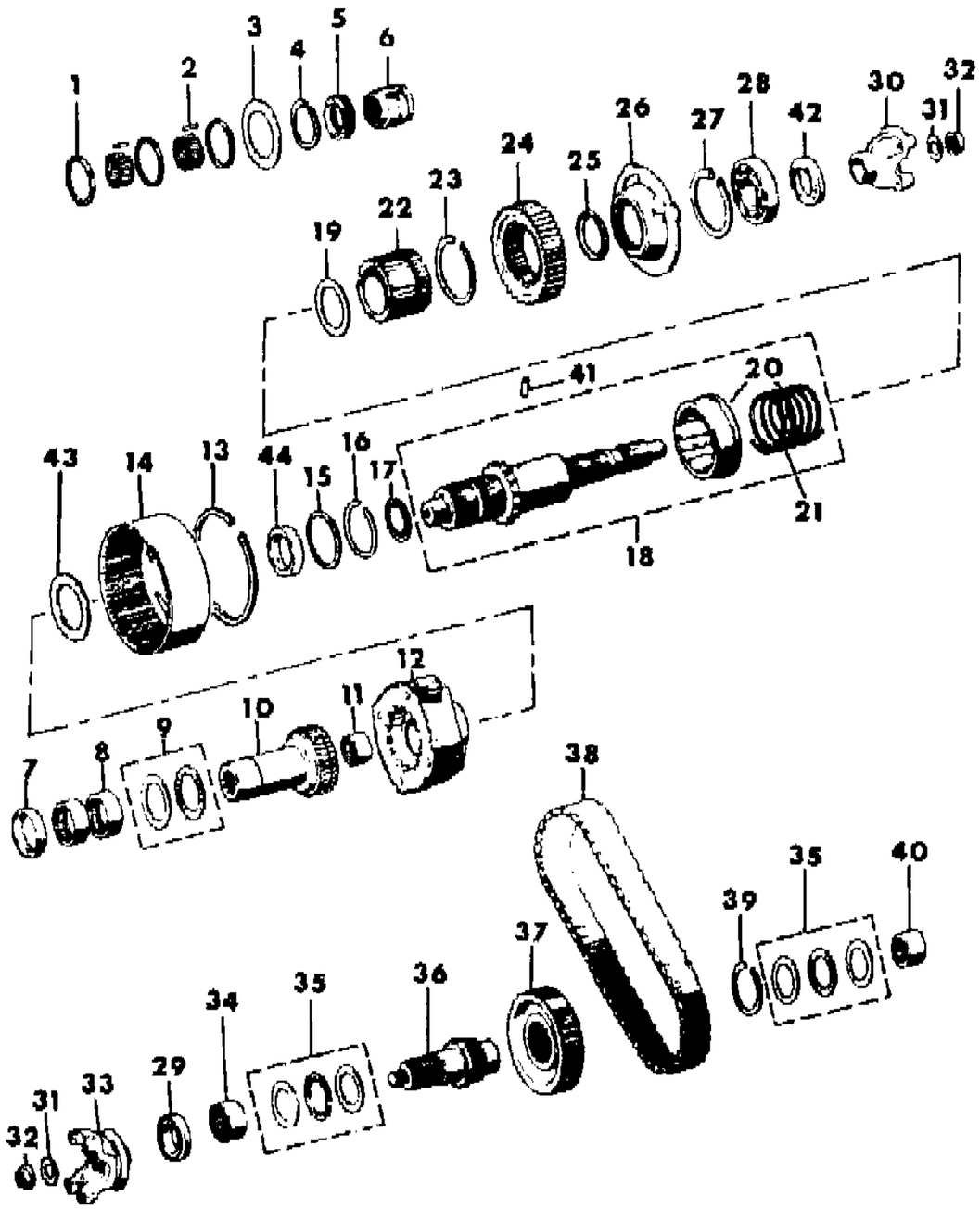

ITEM	PART NUMBER	QTY	BODY	MODEL	DESCRIPTION
1	J813 0971	3			SPACER
2	J813 0972	1			BEARING
3	J813 4130	1			WASHER, Thrust
4	J813 0974	1			RING, Retaining
5	J813 0826	1			PUMP, Transfer Case Oil
6	J813 0827	1			GEAR, Speedometer Drive
7	J535 9457	1			SEAL
8	J813 0868	2			BEARING
9	8350 2717	1			BEARING PACKAGE ***
10					GEAR, Input
	J813 0877	1			With Transfer Case 5359842, 5361528, 3241865, 8933001383, 8933001385 or 8933001386
	J813 2818	1			With Transfer Case 5361334 or 8933001384
11	J813 0878	1			BEARING
12	J813 0862	1			GEAR, Planetary
13	J813 4454	1			RING, Retaining
14					GEAR, Transfer Case Annulus
	J813 0864	1			With Transfer Case 5359842, 5361334, 5361528 or 3241865
	8350 0259	1			With Transfer Case 8933001383, 8933001384, 8933001385 or 8933001386
15					WASHER, Thrust
	J813 0865	1			With Transfer Case 5359842, 5361334, 5361528 or 3241865
	8350 0258	1			With Transfer Case 8933001383, 8933001384, 8933001385 or 8933001386
16	J813 0866	1			RING, Retaining
17	J813 0879	1			BEARING, Thrust
18	8351 0093	1			SHAFT, Main Drive
19	J813 0967	1			WASHER, Thrust
20					CLUTCH
	J813 4545	1			With Transfer Case 5359842, 5361334, 5361528 or 3241865
	8351 0094	1			With Transfer Case 8933001383, 8933001384, 8933001385 or 8933001386
21	8350 1437	1			SPRING
22	J813 4541	1			CARRIER, Sprocket ***
23	J813 0970	1			RING, Retaining
24	J813 0968	1			SPROCKET, Drive
25	J813 0982	1			SEAL
26	J813 0981	1			HOUSING, Oil Pump
27	J813 4411	1			RING, Retaining

MODEL CODES

16=Cherokee 2 Dr.(1981-83)
17=Cherokee 2 Dr.(1981-83)
73=Cherokee 2WD-2 Dr.(1984-86)
74=Cherokee 2WD-4 Dr.(1984-86)
18=Cherokee 4 Dr.(1981-83)
77=Cherokee 4WD-2 Dr.(1984-86)
78=Cherokee 4WD-4 Dr.(1984-86)
85=CJ-5 (1981-83)
86=CJ-6(1981)
87=CJ-7(1981-86)
88=CJ-8, Scrambler(1981-86)
64=Comanche 2WD-6 Ft. Box(1986)
66=Comanche 2WD-7 Ft. Box(1986)
63=Comanche 4WD-6 Ft. Box(1986)
65=Comanche 4WD-7 Ft. Box(1986)
15=Grand Wagoneer 4 Dr.(1984-86)
25=J-10 Truck 7 Ft. Box(1981-84)
26=J10 Truck 8 Ft. Box(1981-86)
27=J-20 Truck 8 Ft. Box(1981-86)
15=Wagoneer 4 Dr.(1981-83)
75=Wagoneer 4WD-4 Dr.(1984-86)

BODY
CJ=CJ-5, CJ-6, CJ-7, CJ-8, Scrambler(1981-86)
MJ=Comanche Pickup(1986)

STYLES
SJ=Wagoneer(1981-83), Grand Wagoneer(1984-86), Cherokee(1981-83), J-10, J-20(1981-86)
XJ=Wagoneer(1984-86), Cherokee(1984-86)

AR = Use as Required - = Non Illustrated Part P.A.R. = Paint as Required

« RETURN TO GROUP INDEX »

GEAR TRAIN N.P.G. MODEL 208
Figure 21M-3200

81J21 3200

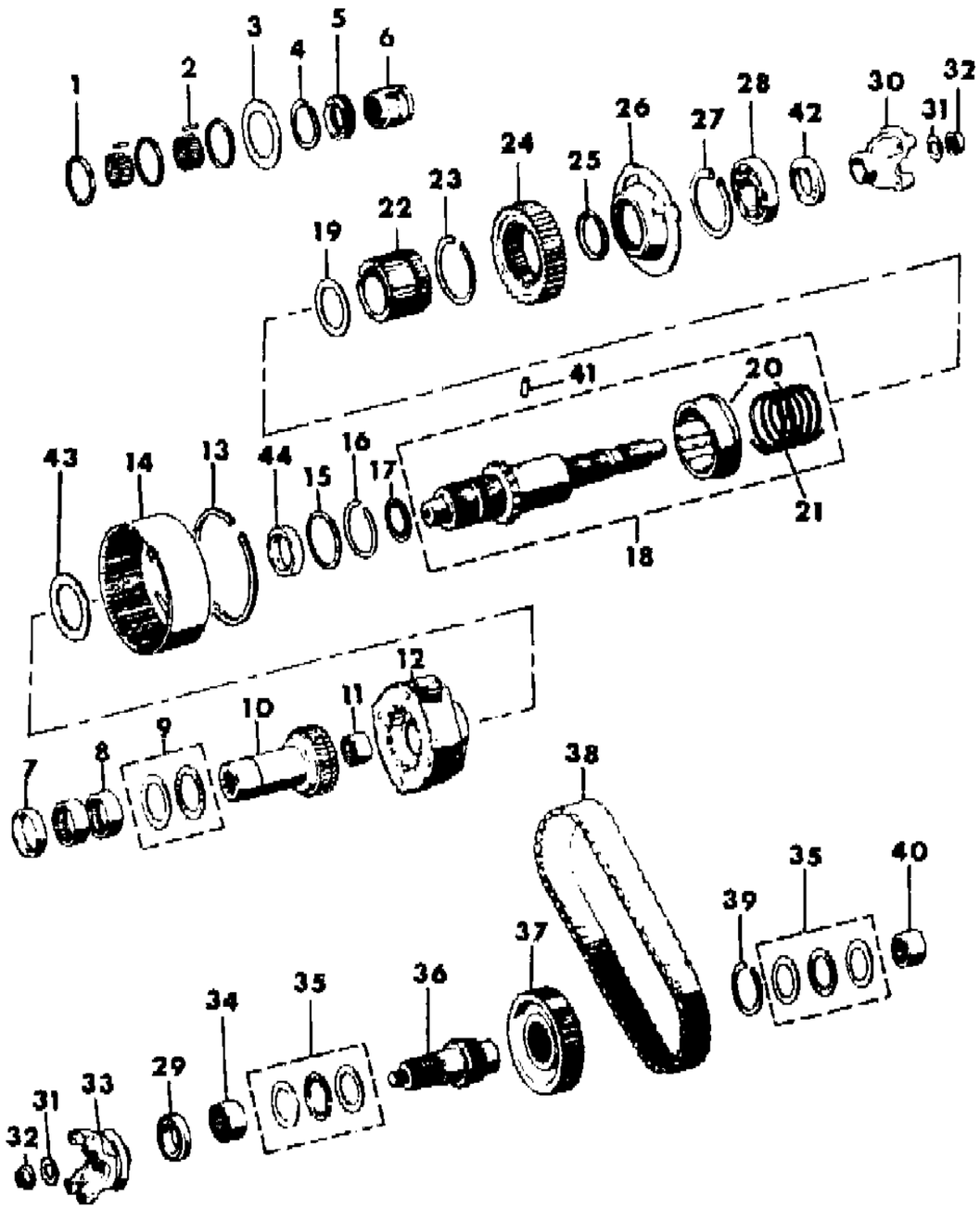

ITEM	PART NUMBER	QTY	BODY	MODEL	DESCRIPTION
28	J813 6626	1			BEARING
29	8350 4434	1			SEAL
30	8350 3578	1			YOKE
31	J813 0815	1			WASHER, Rubber
32	J813 0816	1			NUT
33	J813 0818	1			YOKE
34	J813 0869	1			BEARING
35	J813 0819	1			BEARING PACKAGE ***
36	J813 0976	1			SHAFT, Output
37	J813 0975	1			SPROCKET, Driven
38	J813 0977	1			CHAIN, Drive
39	J813 0802	1			RING, Retaining
40	J813 0836	1			BEARING
41	8351 0095	1			PIN
42	8350 2508	1			SEAL
43	J813 0863	1			WASHER, Not Required if Annulus Gear (Item 14) has a nylon insert. With Transfer Case 5359842, 5361334, 5361528 or 3241865
44	J813 3677	1			BUSHING

MODEL CODES

16=Cherokee 2 Dr.(1981-83)
17=Cherokee 2 Dr.(1981-83)
73=Cherokee 2WD-2 Dr.(1984-86)
74=Cherokee 2WD-4 Dr.(1984-86)
18=Cherokee 4 Dr.(1981-83)
77=Cherokee 4WD-2 Dr.(1984-86)
78=Cherokee 4WD-4 Dr.(1984-86)
85=CJ-5 (1981-83)
86=CJ-6(1981)
87=CJ-7(1981-86)
88=CJ-8, Scrambler(1981-86)
64=Comanche 2WD-6 Ft. Box(1986)
66=Comanche 2WD-7 Ft. Box(1986)
63=Comanche 4WD-6 Ft. Box(1986)
65=Comanche 4WD-7 Ft. Box(1986)
15=Grand Wagoneer 4 Dr.(1984-86)
25=J-10 Truck 7 Ft. Box(1981-84)
26=J10 Truck 8 Ft. Box(1981-86)
27=J-20 Truck 8 Ft. Box(1981-86)
15=Wagoneer 4 Dr.(1981-83)
75=Wagoneer 4WD-4 Dr.(1984-86)

BODY
CJ=CJ-5, CJ-6, CJ-7, CJ-8, Scrambler(1981-86)
MJ=Comanche Pickup(1986)

STYLES
SJ=Wagoneer(1981-83), Grand Wagoneer(1984-86), Cherokee(1981-83), J-10, J-20(1981-86)
XJ=Wagoneer(1984-86), Cherokee(1984-86)

AR = Use as Required - = Non Illustrated Part P.A.R. = Paint as Required

« RETURN TO GROUP INDEX

SHIFT FORKS, RAILS AND SHAFTS N.P.G. MODEL 208
Figure 21M-3300

81J21 3300

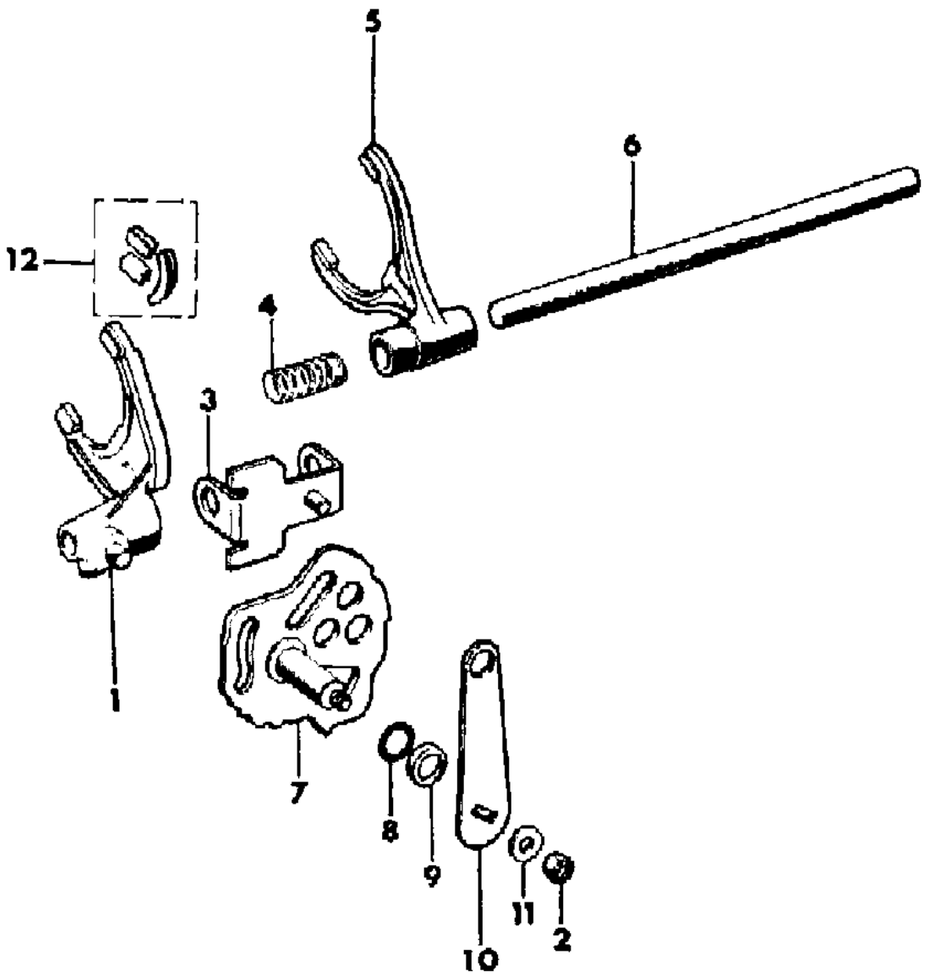

ITEM	PART NUMBER	QTY	BODY	MODEL	DESCRIPTION
1					FORK, Range Shift
	J813 0858	1			With Transfer Case 5359842, 5361334, 5361528 or 3241865
	8350 0260	1			With Transfer Case 8933001383, 8933001384, 8933001385 or 8933001386
2	J813 0813	1			NUT
3	J813 0821	1			BRACKET, Shift
4	J813 0876	1			SPRING
5	J813 0851	1			FORK, Mode Shift
6	J813 0822	1			RAIL, Transfer Case Shift
7	J813 0820	1			SECTOR
8	J813 0854	1			O-RING
9	J813 0853	1			SEAL
10					LEVER, Transfer Case Shift
	J536 0185	1			With Transfer Case 5359842, 5361334, 3241865, 8933001383, 8933001384 or 8933001386
	J536 0082	1			With Transfer Case 5361528 or 8933001385
11	J400 1104	1			WASHER
12	J813 0859	1			PAD PACKAGE, Shift Fork, With Transfer Case 5359842, 5361334, 5361528 or 3241865 ***

MODEL CODES

16=Cherokee 2 Dr.(1981-83)
17=Cherokee 2 Dr.(1981-83)
73=Cherokee 2WD-2 Dr.(1984-86)
74=Cherokee 2WD-4 Dr.(1984-86)
18=Cherokee 4 Dr.(1981-83)
77=Cherokee 4WD-2 Dr.(1984-86)
78=Cherokee 4WD-4 Dr.(1984-86)
85=CJ-5 (1981-83)
86=CJ-6(1981)
87=CJ-7(1981-86)
88=CJ-8, Scrambler(1981-86)
64=Comanche 2WD-6 Ft. Box(1986)
66=Comanche 2WD-7 Ft. Box(1986)
63=Comanche 4WD-6 Ft. Box(1986)
65=Comanche 4WD-7 Ft. Box(1986)
15=Grand Wagoneer 4 Dr.(1984-86)
25=J-10 Truck 7 Ft. Box(1981-84)
26=J10 Truck 8 Ft. Box(1981-86)
27=J-20 Truck 8 Ft. Box(1981-86)
15=Wagoneer 4 Dr.(1981-83)
75=Wagoneer 4WD-4 Dr.(1984-86)

BODY

CJ=CJ-5, CJ-6, CJ-7, CJ-8, Scrambler(1981-86)
MJ=Comanche Pickup(1986)

STYLES

SJ=Wagoneer(1981-83), Grand Wagoneer(1984-86), Cherokee(1981-83), J-10, J-20(1981-86)
XJ=Wagoneer(1984-86), Cherokee(1984-86)

AR = Use as Required - = Non Illustrated Part P.A.R. = Paint as Required

« RETURN TO GROUP INDEX

CASE, EXTENSION AND MISCELLANEOUS PARTS N.P.G. MODEL 219
Figure 21M-3400

81J21 3400

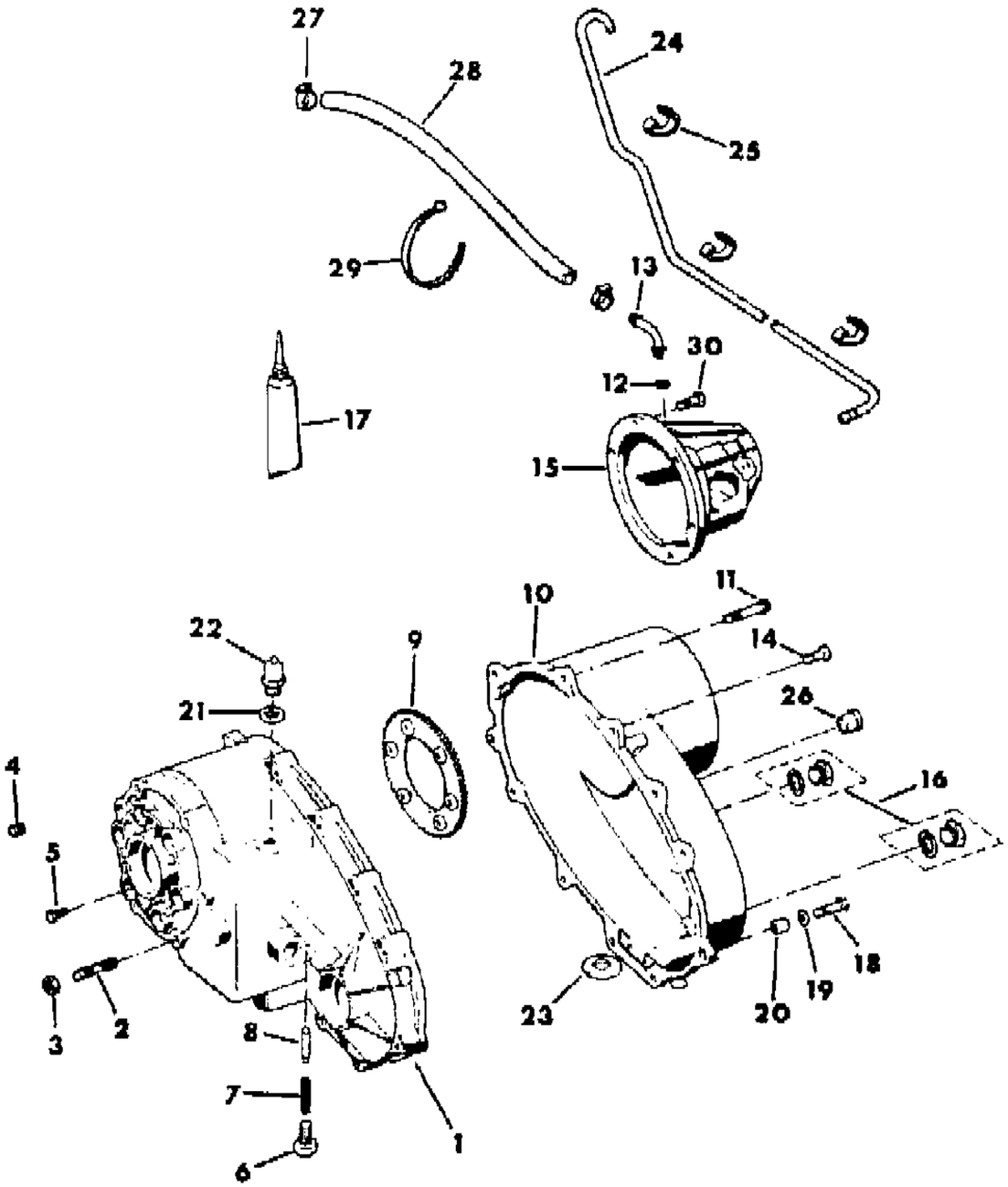

ITEM	PART NUMBER	QTY	BODY	MODEL	DESCRIPTION
1	J813 0867	1			CASE, Front
2	J813 0805	6			STUD, Front Case
3	J400 6681	6			NUT
4	5300 0502	1			PLUG
5	J813 0874	6			BOLT
6	J813 0857	1			SCREW
7	J813 0856	1			SPRING
8	J813 0855	1			PLUNGER
9	J813 0873	1			PLATE
10	J813 0833	1			CASE, Rear
11	J813 0979	1			BOLT
12	J813 3743	1			SEAL
13	J813 1659	1			VENT
14	J813 0810	AR			BOLT
15	J813 0806	1			RETAINER
16	J813 0824	2			PLUG
17	J899 3317	1			SEALER, RTV ***
18	1150 0831	1			BOLT
19	J400 1104	1			WASHER
20	J813 0872	1			DOWEL
21	J813 0830	1			SEAL
22	J813 2843	1			SWITCH ASSEMBLY, 4WD Indicator Lamp
23	J813 1823	1			MAGNET
24		1			TUBE
	J536 3389	1			Six Cylinder
	J536 1519	1			Eight Cylinder
25	J313 7319	3			CLIP
26	J813 1617	1			PLUG
27	J400 6047	2			CLAMP
28	J812 5823	1			TUBE, (Bulk)
29	J322 3227	AR			STRAP
30	J813 0984	6			BOLT

MODEL CODES

16=Cherokee 2 Dr.(1981-83)
17=Cherokee 2 Dr.(1981-83)
73=Cherokee 2WD-2 Dr.(1984-86)
74=Cherokee 2WD-4 Dr.(1984-86)
18=Cherokee 4 Dr.(1981-83)
77=Cherokee 4WD-2 Dr.(1984-86)
78=Cherokee 4WD-4 Dr.(1984-86)
85=CJ-5 (1981-83)
86=CJ-6(1981)
87=CJ-7(1981-86)
88=CJ-8, Scrambler(1981-86)
64=Comanche 2WD-6 Ft. Box(1986)
66=Comanche 2WD-7 Ft. Box(1986)
63=Comanche 4WD-6 Ft. Box(1986)
65=Comanche 4WD-7 Ft. Box(1986)
15=Grand Wagoneer 4 Dr.(1984-86)
25=J-10 Truck 7 Ft. Box(1981-84)
26=J10 Truck 8 Ft. Box(1981-86)
27=J-20 Truck 8 Ft. Box(1981-86)
15=Wagoneer 4 Dr.(1981-83)
75=Wagoneer 4WD-4 Dr.(1984-86)

BODY
CJ=CJ-5, CJ-6, CJ-7, CJ-8, Scrambler(1981-86)
MJ=Comanche Pickup(1986)

STYLES
SJ=Wagoneer(1981-83), Grand Wagoneer(1984-86), Cherokee(1981-83), J-10, J-20(1981-86)
XJ=Wagoneer(1984-86), Cherokee(1984-86)

AR = Use as Required - = Non Illustrated Part P.A.R. = Paint as Required

« RETURN TO GROUP INDEX

GEAR TRAIN N.P.G. MODEL 219
Figure 21M-3500

81J21 3500

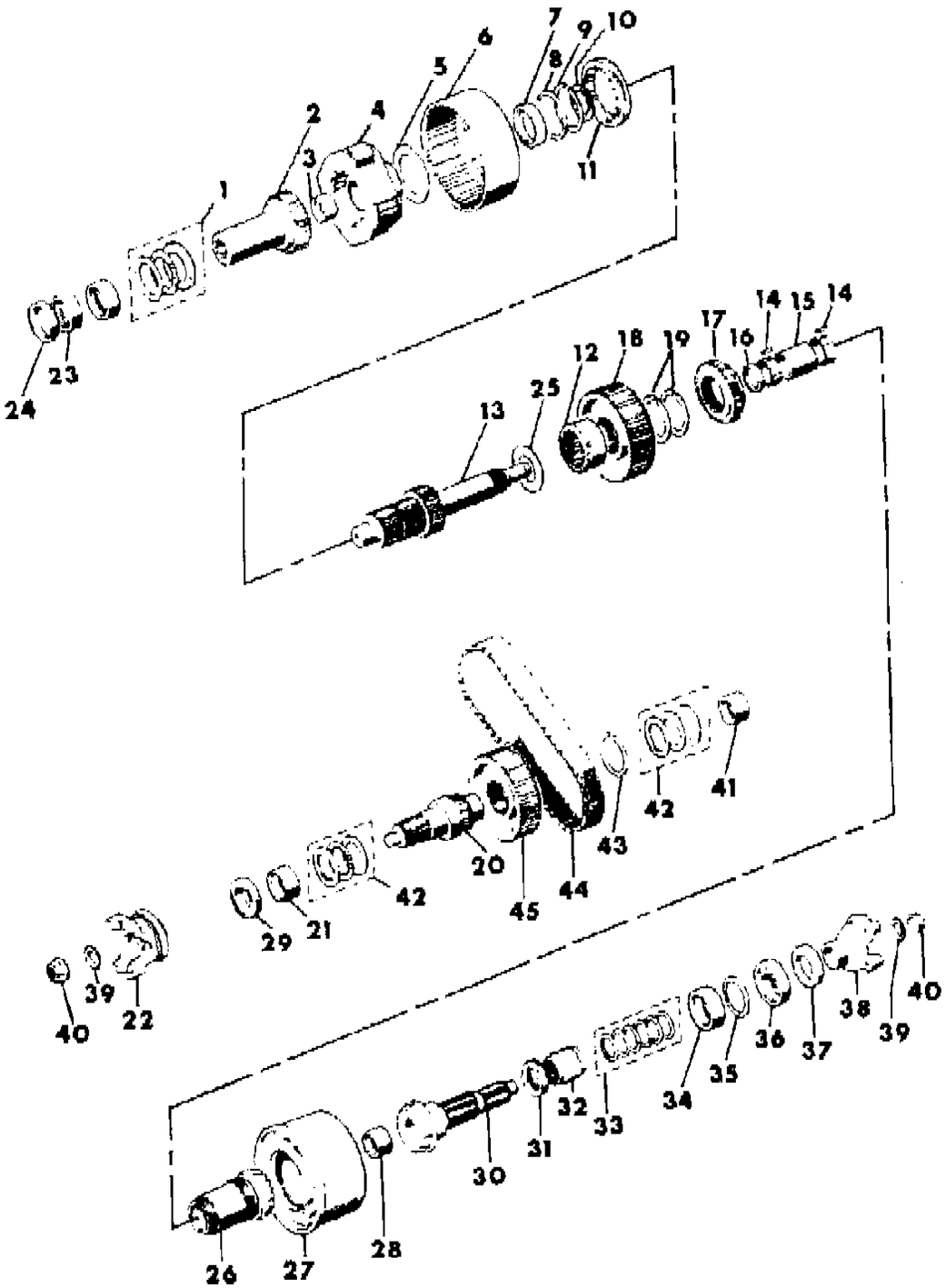

ITEM	PART NUMBER	QTY	BODY	MODEL	DESCRIPTION
1					BEARING PACKAGE ***
	8350 2717	1			With Transfer Case 5359846
	8350 0382	1			With Transfer Case 8953001346
2	J813 0877	1			SHAFT, Input
3	J813 0878	1			BEARING
4	J813 0862	1			GEAR, Planetary
5	J813 0863	1			WASHER, Thrust
6	J813 0864	1			GEAR, Transfer Case Annulus
7	J813 3677	1			BUSHING
8	J813 0865	1			WASHER, Thrust
9	J813 0866	1			RING, Retaining
10	J813 0879	1			BEARING
11	J813 0840	1			COLLAR, Shift
12	J813 0841	1			GEAR
13	J813 0842	1			SHAFT, Main Drive
14	J813 0846	1			ROLLER
15	J813 0847	1			SPACER
16	J813 0848	1			SPACER
17	J813 0801	1			GEAR
18	J813 0849	1			SPROCKET
19	J813 0802	1			RING, Retaining
20	J813 0850	1			SHAFT, Output
21	J813 0869	1			BEARING
22	J813 0818	1			FLANGE, With Slinger
23	J813 0868	2			BEARING
24	J535 9457	1			SEAL, Oil
25	J813 0844	1			WASHER, Thrust
26	J813 0845	1			GEAR
27	J813 0800	1			VISCOUS ***
28	8350 3570	1			BEARING
29	8350 4434	1			SEAL
30	J813 0803	1			SHAFT, Output
31	J813 3645	1			PUMP, Transfer Case Oil
32	J813 0827	1			GEAR, Speedometer Drive, (13 Teeth)
33	J813 0828	1			SHIM PACKAGE ***
34	J813 0835	1			BEARING
35	J813 0834	1			SEAL
36	J813 6626	1			BEARING
37	8350 2508	1			SEAL

MODEL CODES

16=Cherokee 2 Dr.(1981-83)
17=Cherokee 2 Dr.(1981-83)
73=Cherokee 2WD-2 Dr.(1984-86)
74=Cherokee 2WD-4 Dr.(1984-86)
18=Cherokee 4 Dr.(1981-83)
77=Cherokee 4WD-2 Dr.(1984-86)
78=Cherokee 4WD-4 Dr.(1984-86)
85=CJ-5 (1981-83)
86=CJ-6(1981)
87=CJ-7(1981-86)
88=CJ-8, Scrambler(1981-86)
64=Comanche 2WD-6 Ft. Box(1986)
66=Comanche 2WD-7 Ft. Box(1986)
63=Comanche 4WD-6 Ft. Box(1986)
65=Comanche 4WD-7 Ft. Box(1986)
15=Grand Wagoneer 4 Dr.(1984-86)
25=J-10 Truck 7 Ft. Box(1981-84)
26=J10 Truck 8 Ft. Box(1981-86)
27=J-20 Truck 8 Ft. Box(1981-86)
15=Wagoneer 4 Dr.(1981-83)
75=Wagoneer 4WD-4 Dr.(1984-86)

BODY
CJ=CJ-5, CJ-6, CJ-7, CJ-8, Scrambler(1981-86)
MJ=Comanche Pickup(1986)

STYLES
SJ=Wagoneer(1981-83), Grand Wagoneer(1984-86), Cherokee(1981-83), J-10, J-20(1981-86)
XJ=Wagoneer(1984-86), Cherokee(1984-86)

AR = Use as Required - = Non Illustrated Part P.A.R. = Paint as Required

« RETURN TO GROUP INDEX »

GEAR TRAIN N.P.G. MODEL 219
Figure 21M-3500

81J21 3500

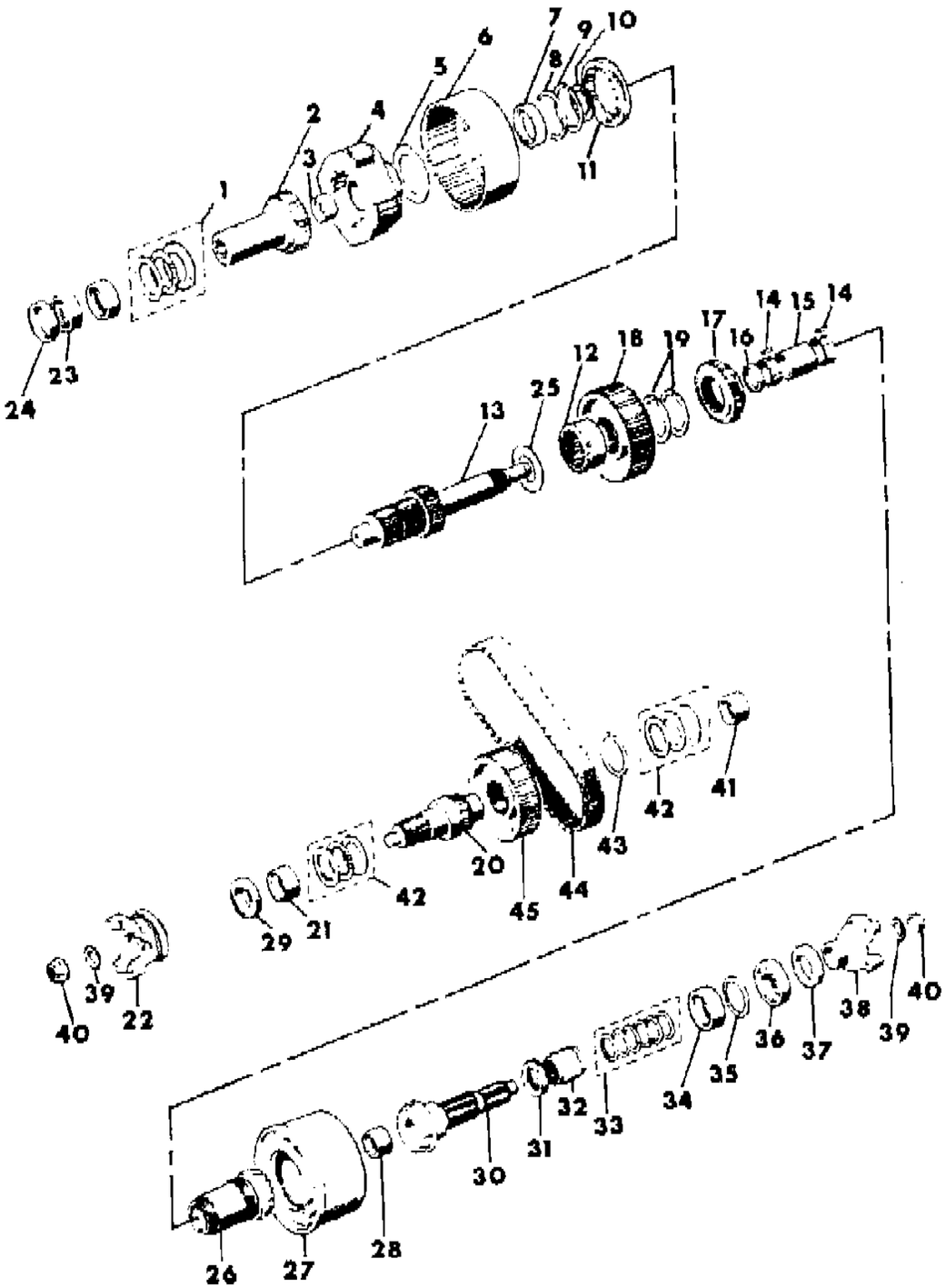

ITEM	PART NUMBER	QTY	BODY	MODEL	DESCRIPTION
38	8350 3578	1			YOKE
39	J813 0815	1			WASHER
40	J813 0816	1			NUT
41	J813 0836	1			BEARING
42	J813 0819	2			BEARING PACKAGE ***
43	J813 0802	1			RING, Retaining
44	J813 0831	1			CHAIN, Drive
45	J813 0849	1			SPROCKET, Driven

MODEL CODES

16=Cherokee 2 Dr.(1981-83)
17=Cherokee 2 Dr.(1981-83)
73=Cherokee 2WD-2 Dr.(1984-86)
74=Cherokee 2WD-4 Dr.(1984-86)
18=Cherokee 4 Dr.(1981-83)
77=Cherokee 4WD-2 Dr.(1984-86)
78=Cherokee 4WD-4 Dr.(1984-86)
85=CJ-5 (1981-83)
86=CJ-6(1981)
87=CJ-7(1981-86)
88=CJ-8, Scrambler(1981-86)
64=Comanche 2WD-6 Ft. Box(1986)
66=Comanche 2WD-7 Ft. Box(1986)
63=Comanche 4WD-6 Ft. Box(1986)
65=Comanche 4WD-7 Ft. Box(1986)
15=Grand Wagoneer 4 Dr.(1984-86)
25=J-10 Truck 7 Ft. Box(1981-84)
26=J10 Truck 8 Ft. Box(1981-86)
27=J-20 Truck 8 Ft. Box(1981-86)
15=Wagoneer 4 Dr.(1981-83)
75=Wagoneer 4WD-4 Dr.(1984-86)

BODY
CJ=CJ-5, CJ-6, CJ-7, CJ-8, Scrambler(1981-86)
MJ=Comanche Pickup(1986)

STYLES
SJ=Wagoneer(1981-83), Grand Wagoneer(1984-86), Cherokee(1981-83), J-10, J-20(1981-86)
XJ=Wagoneer(1984-86), Cherokee(1984-86)

AR = Use as Required - = Non Illustrated Part P.A.R. = Paint as Required

« RETURN TO GROUP INDEX

SHIFT FORKS, RAILS AND SHAFTS N.P.G. MODEL 219
Figure 21M-3600

81J21 3600

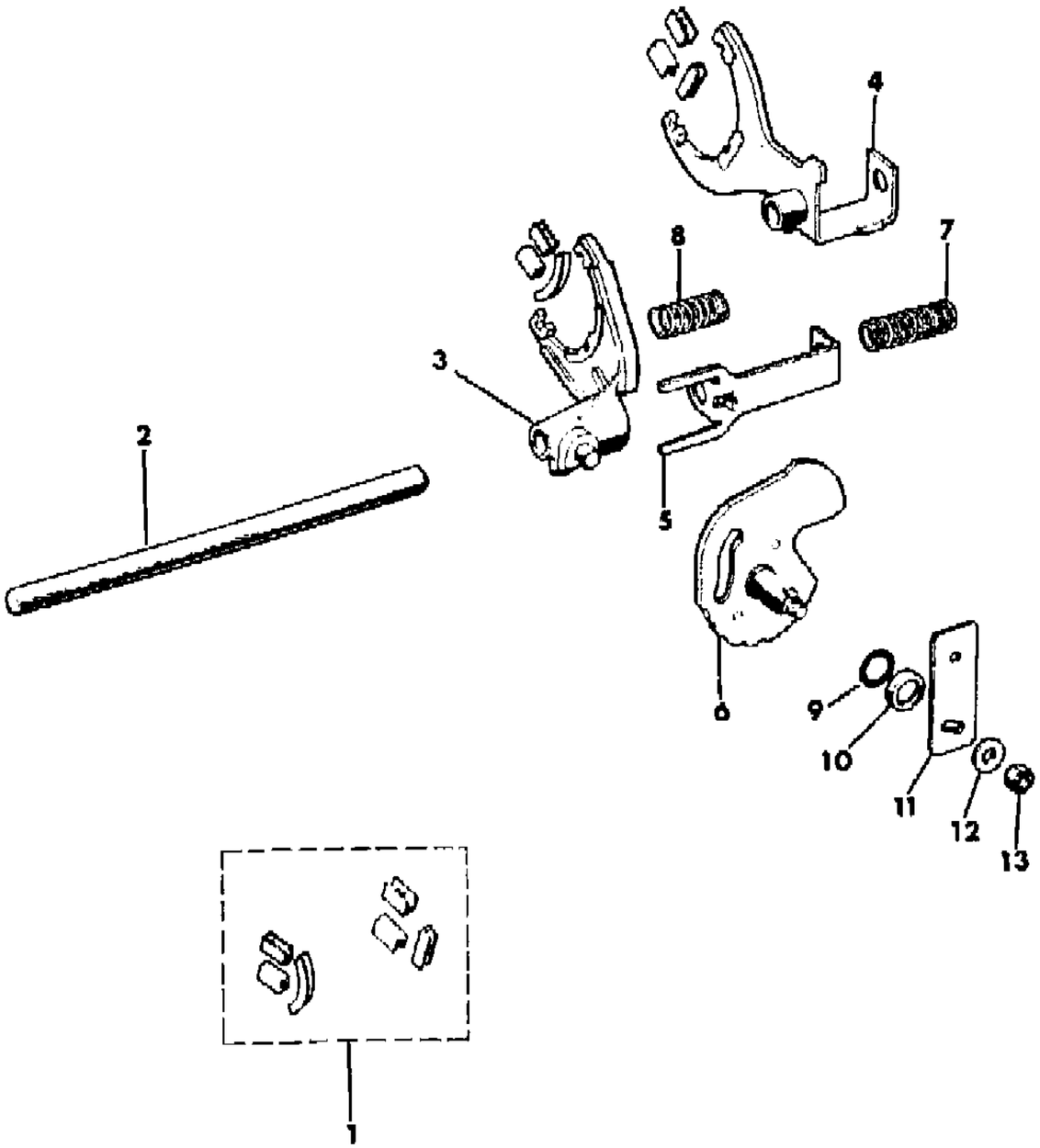

ITEM	PART NUMBER	QTY	BODY	MODEL	DESCRIPTION
1	J813 0859	1			PAD PACKAGE, Shift Fork ***
2	J813 0838	1			RAIL, Transfer Case Shift
3	J813 0858	1			FORK, Range
4	J813 0860	1			FORK, Locking
5	J813 0837	1			BRACKET
6	J813 0852	1			SECTOR, Range Shift
7	J813 0839	1			SPRING
8	J813 0861	1			SPRING
9	J813 0854	1			SEAL
10	J813 0853	1			RETAINER
11	J813 0811	1			LEVER, Transfer Case Range Shift
12	J400 1104	1			WASHER
13	J813 0813	1			NUT

MODEL CODES

16=Cherokee 2 Dr.(1981-83)
17=Cherokee 2 Dr.(1981-83)
73=Cherokee 2WD-2 Dr.(1984-86)
74=Cherokee 2WD-4 Dr.(1984-86)
18=Cherokee 4 Dr.(1981-83)
77=Cherokee 4WD-2 Dr.(1984-86)
78=Cherokee 4WD-4 Dr.(1984-86)
85=CJ-5 (1981-83)
86=CJ-6(1981)
87=CJ-7(1981-86)
88=CJ-8, Scrambler(1981-86)
64=Comanche 2WD-6 Ft. Box(1986)
66=Comanche 2WD-7 Ft. Box(1986)
63=Comanche 4WD-6 Ft. Box(1986)
65=Comanche 4WD-7 Ft. Box(1986)
15=Grand Wagoneer 4 Dr.(1984-86)
25=J-10 Truck 7 Ft. Box(1981-84)
26=J10 Truck 8 Ft. Box(1981-86)
27=J-20 Truck 8 Ft. Box(1981-86)
15=Wagoneer 4 Dr.(1981-83)
75=Wagoneer 4WD-4 Dr.(1984-86)

BODY
CJ=CJ-5, CJ-6, CJ-7, CJ-8, Scrambler(1981-86)
MJ=Comanche Pickup(1986)

STYLES
SJ=Wagoneer(1981-83), Grand Wagoneer(1984-86), Cherokee(1981-83), J-10, J-20(1981-86)
XJ=Wagoneer(1984-86), Cherokee(1984-86)

AR = Use as Required - = Non Illustrated Part P.A.R. = Paint as Required

« RETURN TO GROUP INDEX

CASE, EXTENSION AND MISCELLANEOUS PARTS N.P.G. MODEL 228 OR 229
Figure 21M-3700

81J21 3700

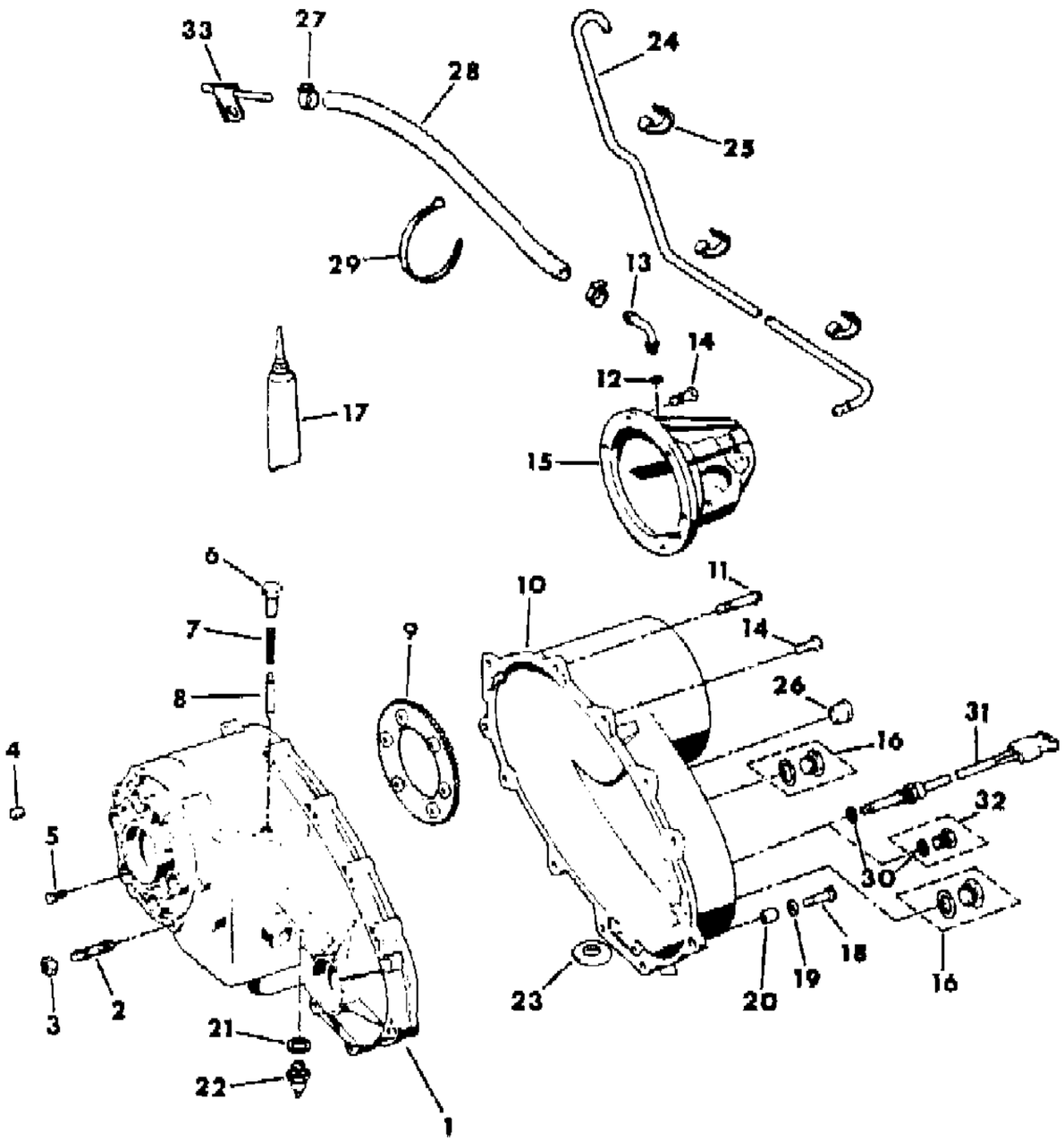

ITEM	PART NUMBER	QTY	BODY	MODEL	DESCRIPTION
1	J813 4278	1			CASE, Front
2					STUD, Front Case
	8350 0952	AR			23mm
	J813 0805	AR			36mm
3	J400 6681	AR			NUT
4	5300 0502	1			PLUG
5	J813 0874	6			BOLT
6	J813 3641	1			SCREW
7	J813 4289	1			SPRING
8	J813 4282	1			PLUNGER
9	J813 0873	1			PLATE
10					CASE, Rear
			XJ		1984-85
	J813 4271	1			Without System Sentry
	8350 0388	1			With System Sentry
	8350 2613	1	XJ MJ		1986
	8350 2613	1	SJ		1982-86
11	J813 0979	1			BOLT
12	J813 3743	1			SEAL
13	J813 0985	1			VENT
14	J813 0810	AR			BOLT
15	J813 0806	1			RETAINER
16	J813 0824	2			PLUG
17	J899 3317	AR			SEALER, RTV ***
18	1150 0831	1			BOLT
19	J400 1104	1			WASHER
20	J813 0825	1			DOWEL
21	J813 0830	1			SEAL
22					SWITCH ASSEMBLY, 4WD Indicator Lamp
	J813 2843	1	XJ		1984-85
	8350 2652	1			1986
23	J813 0823	1			MAGNET
24					TUBE
	J536 3389	1	SJ		Six Cylinder
	J536 1519	1	SJ		Eight Cylinder
25	J313 7319	3	SJ		CLIP
26	J813 1617	1	SJ		PLUG
27	J400 6047	2			CLAMP
28	J812 5823	1			TUBE, (Bulk)

MODEL CODES

16=Cherokee 2 Dr.(1981-83)
17=Cherokee 2 Dr.(1981-83)
73=Cherokee 2WD-2 Dr.(1984-86)
74=Cherokee 2WD-4 Dr.(1984-86)
18=Cherokee 4 Dr.(1981-83)
77=Cherokee 4WD-2 Dr.(1984-86)
78=Cherokee 4WD-4 Dr.(1984-86)
85=CJ-5 (1981-83)
86=CJ-6(1981)
87=CJ-7(1981-86)
88=CJ-8, Scrambler(1981-86)
64=Comanche 2WD-6 Ft. Box(1986)
66=Comanche 2WD-7 Ft. Box(1986)
63=Comanche 4WD-6 Ft. Box(1986)
65=Comanche 4WD-7 Ft. Box(1986)
15=Grand Wagoneer 4 Dr.(1984-86)
25=J-10 Truck 7 Ft. Box(1981-84)
26=J10 Truck 8 Ft. Box(1981-86)
27=J-20 Truck 8 Ft. Box(1981-86)
15=Wagoneer 4 Dr.(1981-83)
75=Wagoneer 4WD-4 Dr.(1984-86)

BODY
CJ=CJ-5, CJ-6, CJ-7, CJ-8, Scrambler(1981-86)
MJ=Comanche Pickup(1986)

STYLES
SJ=Wagoneer(1981-83), Grand Wagoneer(1984-86), Cherokee(1981-83), J-10, J-20(1981-86)
XJ=Wagoneer(1984-86), Cherokee(1984-86)

AR = Use as Required - = Non Illustrated Part P.A.R. = Paint as Required

« RETURN TO GROUP INDEX »

81J21 3700

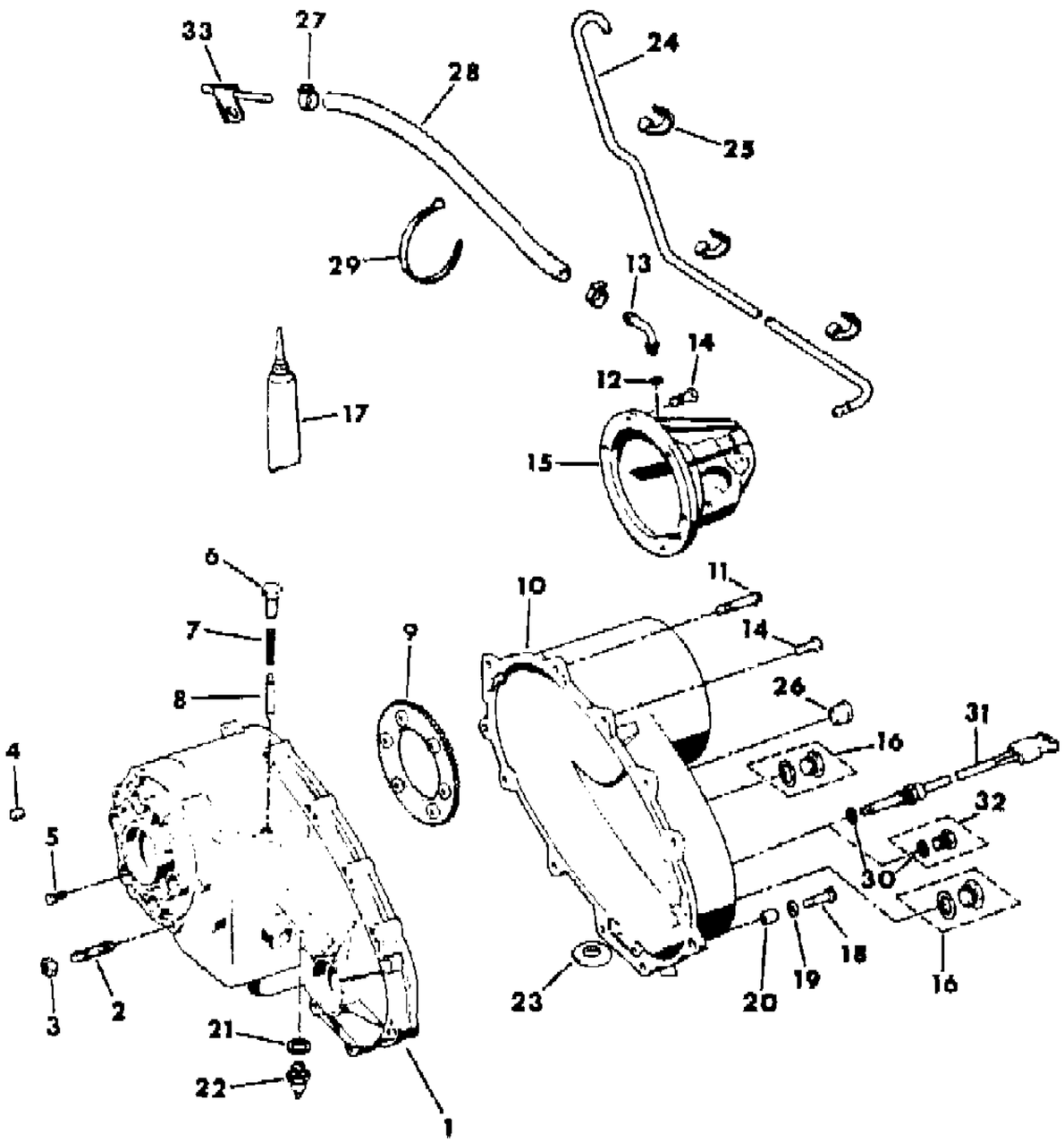

ITEM	PART NUMBER	QTY	BODY	MODEL	DESCRIPTION
29	J322 3227	1			STRAP
30	3300 0322	1	XJ MJ		GASKET
31	5300 0376	1	XJ		SENSOR, Oil Level, With System Sentry
32	8350 0271	1			PLUG PACKAGE, Without System Sentry ***
33	5300 0805	1	XJ MJ		TUBE

MODEL CODES

16=Cherokee 2 Dr.(1981-83)
17=Cherokee 2 Dr.(1981-83)
73=Cherokee 2WD-2 Dr.(1984-86)
74=Cherokee 2WD-4 Dr.(1984-86)
18=Cherokee 4 Dr.(1981-83)
77=Cherokee 4WD-2 Dr.(1984-86)
78=Cherokee 4WD-4 Dr.(1984-86)
85=CJ-5 (1981-83)
86=CJ-6(1981)
87=CJ-7(1981-86)
88=CJ-8, Scrambler(1981-86)
64=Comanche 2WD-6 Ft. Box(1986)
66=Comanche 2WD-7 Ft. Box(1986)
63=Comanche 4WD-6 Ft. Box(1986)
65=Comanche 4WD-7 Ft. Box(1986)
15=Grand Wagoneer 4 Dr.(1984-86)
25=J-10 Truck 7 Ft. Box(1981-84)
26=J10 Truck 8 Ft. Box(1981-86)
27=J-20 Truck 8 Ft. Box(1981-86)
15=Wagoneer 4 Dr.(1981-83)
75=Wagoneer 4WD-4 Dr.(1984-86)

BODY
CJ=CJ-5, CJ-6, CJ-7, CJ-8, Scrambler(1981-86)
MJ=Comanche Pickup(1986)

STYLES
SJ=Wagoneer(1981-83), Grand Wagoneer(1984-86), Cherokee(1981-83), J-10, J-20(1981-86)
XJ=Wagoneer(1984-86), Cherokee(1984-86)

AR = Use as Required - = Non Illustrated Part P.A.R. = Paint as Required

GEAR TRAIN N.P.G. MODEL 228 OR 229
Figure 21M-3800

81J21 3800 A

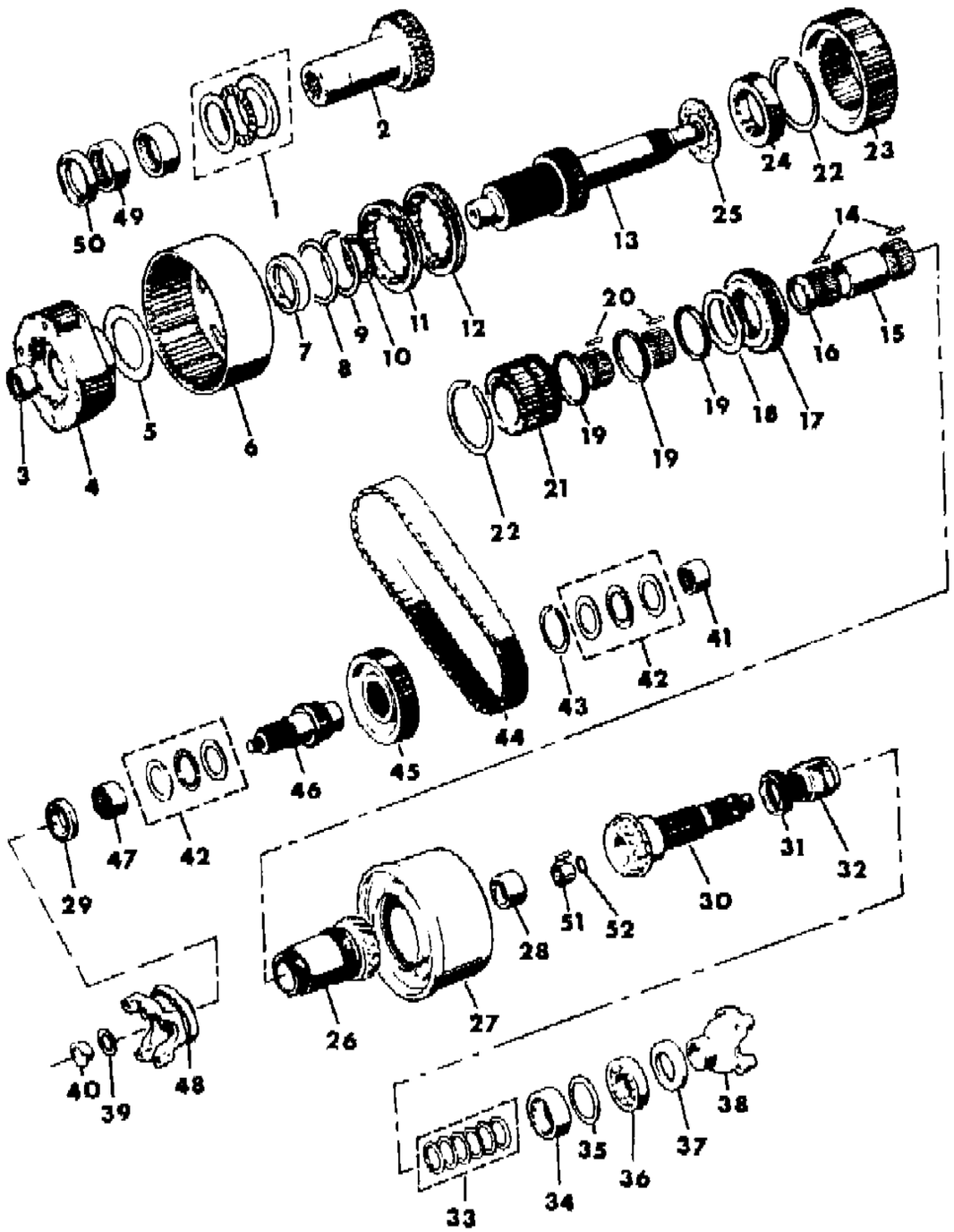

ITEM	PART NUMBER	QTY	BODY	MODEL	DESCRIPTION
1	8350 0382	1			BEARING PACKAGE ***
2	8350 0492	1			SHAFT, Input
3	J813 0878	1			BEARING
4	8350 0383	1			GEAR, Planetary
5	J813 0863	1			WASHER, Thrust
6	J813 0864	1			GEAR, Transfer Case Annulus
7	J813 3677	1			BUSHING
8	J813 0865	1			WASHER, Thrust
9	J813 0866	1			RING, Retaining
10	J813 0879	1			BEARING
11	8350 2611	1			COLLAR, Shift
12	8350 2516	1			COLLAR, Shift
13	J813 4274	1			SHAFT, Main Drive
14	J813 0846	1			ROLLER
15	J813 0847	1			SPACER
16	J813 0848	1			SPACER
17	J813 0801	1			GEAR, With Model 229
18	J813 1613	1			WASHER, Thrust
19	J813 1612	2			SPACER
20	J813 1611	1			ROLLER PACKAGE ***
21	J813 3632	1			CARRIER, Sprocket ***
22	J813 0970	2			RING, Retaining
23	J813 1610	1			SPROCKET, Drive
24	J813 3633	1			GEAR
25	J813 0844	1			WASHER, Thrust
26	J813 1608	1			GEAR
27					VISCOUS ASSEMBLY ***
	J813 0800	1			With Model 229
	8350 2517	1			With Model 228
28	8350 3570	1	SJ		BEARING
29	8350 4434	1			SEAL
30	J813 0803	1			SHAFT, Output
31	J813 3645	1			PUMP, Transfer Case Oil
32	J813 3646	1			GEAR, Speedometer Drive
33	J813 0828	1			SHIM PACKAGE ***
34	J813 3644	1			BEARING
35	4210 603	1			SEAL
36	J813 6626	1			BEARING
37	8350 2508	1			SEAL

MODEL CODES

16=Cherokee 2 Dr.(1981-83)
17=Cherokee 2 Dr.(1981-83)
73=Cherokee 2WD-2 Dr.(1984-86)
74=Cherokee 2WD-4 Dr.(1984-86)
18=Cherokee 4 Dr.(1981-83)
77=Cherokee 4WD-2 Dr.(1984-86)
78=Cherokee 4WD-4 Dr.(1984-86)
85=CJ-5 (1981-83)
86=CJ-6(1981)
87=CJ-7(1981-86)
88=CJ-8, Scrambler(1981-86)
64=Comanche 2WD-6 Ft. Box(1986)
66=Comanche 2WD-7 Ft. Box(1986)
63=Comanche 4WD-6 Ft. Box(1986)
65=Comanche 4WD-7 Ft. Box(1986)
15=Grand Wagoneer 4 Dr.(1984-86)
25=J-10 Truck 7 Ft. Box(1981-84)
26=J10 Truck 8 Ft. Box(1981-86)
27=J-20 Truck 8 Ft. Box(1981-86)
15=Wagoneer 4 Dr.(1981-83)
75=Wagoneer 4WD-4 Dr.(1984-86)

BODY
CJ=CJ-5, CJ-6, CJ-7, CJ-8, Scrambler(1981-86)
MJ=Comanche Pickup(1986)

STYLES
SJ=Wagoneer(1981-83), Grand Wagoneer(1984-86), Cherokee(1981-83), J-10, J-20(1981-86)
XJ=Wagoneer(1984-86), Cherokee(1984-86)

AR = Use as Required - = Non Illustrated Part P.A.R. = Paint as Required

« RETURN TO GROUP INDEX »

GEAR TRAIN N.P.G. MODEL 228 OR 229
Figure 21M-3800

81J21 3800 A

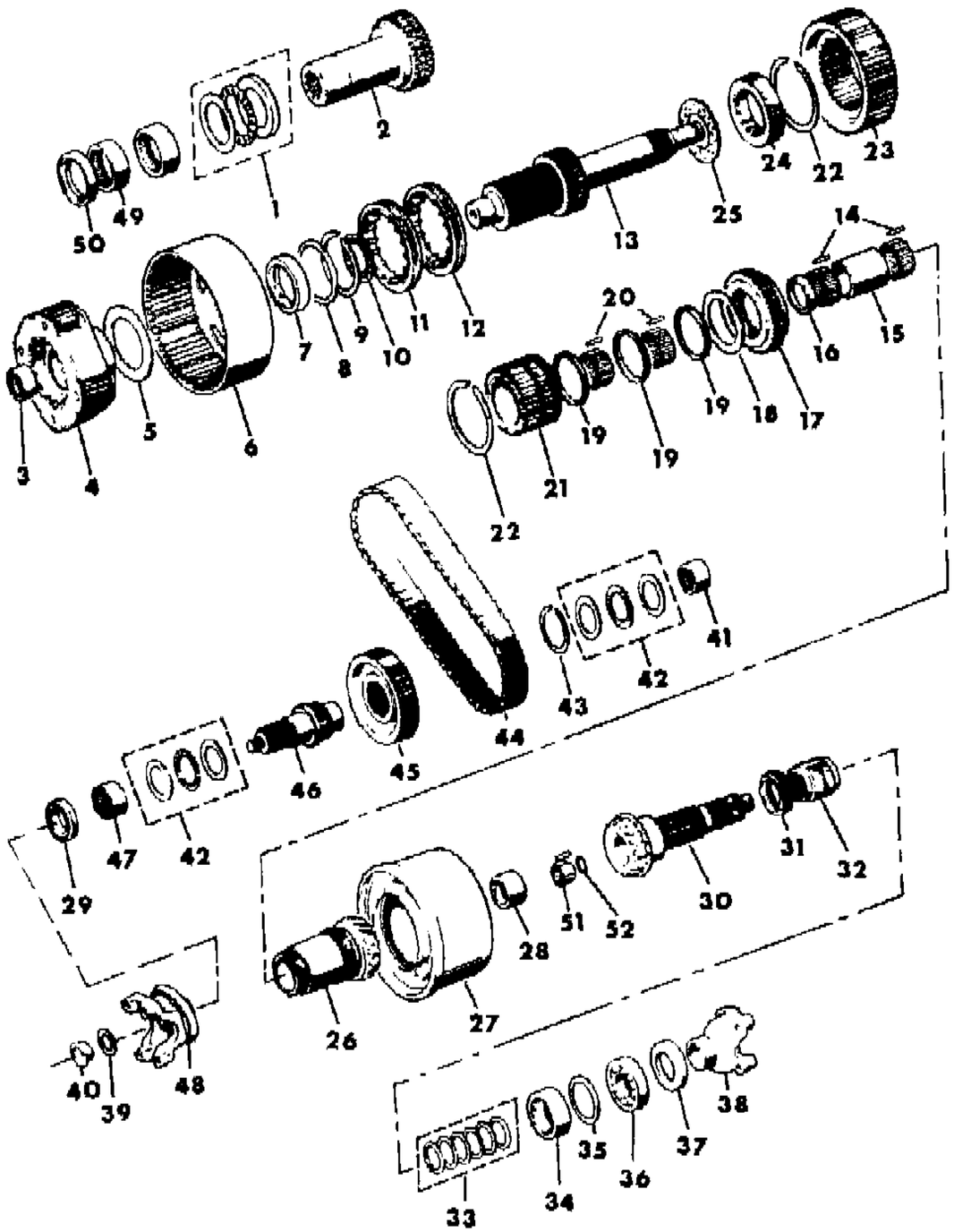

ITEM	PART NUMBER	QTY	BODY	MODEL	DESCRIPTION
38	8350 3578	1			YOKE PACKAGE ***
39	J813 0815	1			WASHER
40	J813 0816	1			NUT
41	J813 0836	1			BEARING
42	J813 0819	2			BEARING PACKAGE ***
43	J813 0802	1			RING, Retaining
44	J813 0831	1			CHAIN, Drive
45	8350 0491	1			SPROCKET, Drive
46	J813 0850	1			SHAFT, Output
47	J813 0869	1			BEARING
48					FLANGE, With Slinger
	5300 0905	1	XJ,MJ		1984-85
					1986
	5300 0905	1	XJ,MJ		With Transfer Case 53002403
	J813 4272	1	XJ,MJ		With Transfer Case 53002391
	8350 3586	1	SJ		
49	J813 0868	2			BEARING
50	J535 9457	1			SEAL, Oil
51	J813 0804	1	XJ,MJ		ROLLER
52	J813 0843	1	XJ,MJ		O-RING

MODEL CODES

16=Cherokee 2 Dr.(1981-83)
17=Cherokee 2 Dr.(1981-83)
73=Cherokee 2WD-2 Dr.(1984-86)
74=Cherokee 2WD-4 Dr.(1984-86)
18=Cherokee 4 Dr.(1981-83)
77=Cherokee 4WD-2 Dr.(1984-86)
78=Cherokee 4WD-4 Dr.(1984-86)
85=CJ-5 (1981-83)
86=CJ-6(1981)
87=CJ-7(1981-86)
88=CJ-8, Scrambler(1981-86)
64=Comanche 2WD-6 Ft. Box(1986)
66=Comanche 2WD-7 Ft. Box(1986)
63=Comanche 4WD-6 Ft. Box(1986)
65=Comanche 4WD-7 Ft. Box(1986)
15=Grand Wagoneer 4 Dr.(1984-86)
25=J-10 Truck 7 Ft. Box(1981-84)
26=J10 Truck 8 Ft. Box(1981-86)
27=J-20 Truck 8 Ft. Box(1981-86)
15=Wagoneer 4 Dr.(1981-83)
75=Wagoneer 4WD-4 Dr.(1984-86)

BODY
CJ=CJ-5, CJ-6, CJ-7, CJ-8, Scrambler(1981-86)
MJ=Comanche Pickup(1986)

STYLES
SJ=Wagoneer(1981-83), Grand Wagoneer(1984-86), Cherokee(1981-83), J-10, J-20(1981-86)
XJ=Wagoneer(1984-86), Cherokee(1984-86)

AR = Use as Required - = Non Illustrated Part P.A.R. = Paint as Required

« RETURN TO GROUP INDEX

SHIFT FORKS, RAILS AND SHAFTS N.P.G. MODEL 228 OR 229
Figure 21M-3900

81J21 3900

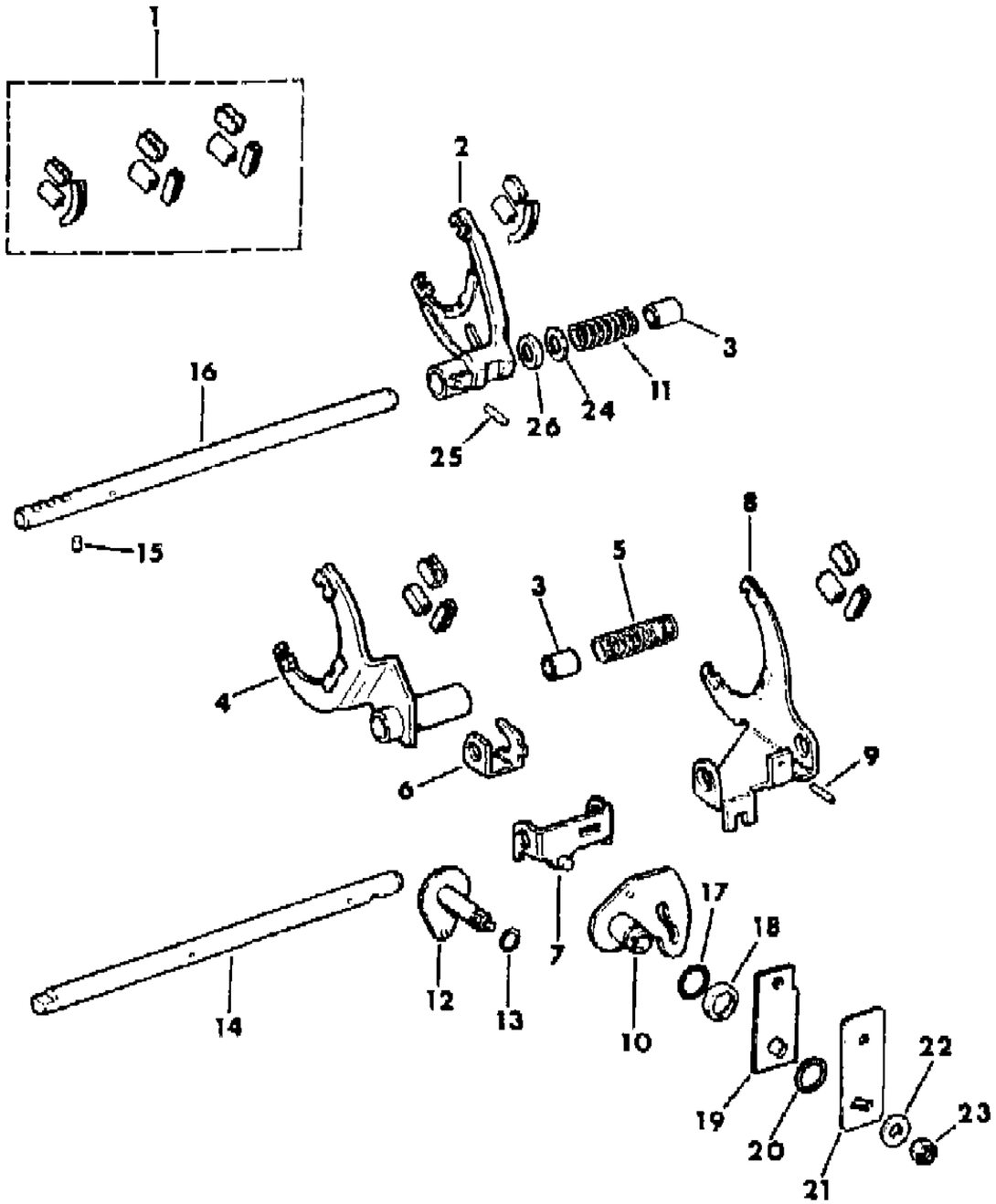

ITEM	PART NUMBER	QTY	BODY	MODEL	DESCRIPTION
1	J813 4279	1			PAD PACKAGE, Shift Fork ***
2	J813 4276	1			FORK, Range Shift
3	J813 4291	2			BUSHING
4	J813 4287	1			FORK, Locking
5	J813 4286	1			SPRING
6	J813 4298	1			BRACKET
7	J813 4407	1			BRACKET ASSEMBLY
8	J813 4275	1			FORK, Mode Shift
9	J813 4307	1			PIN
10	J813 4277	1			SECTOR, Range Shift
11	J813 4284	1			SPRING
12	J813 4288	1			SECTOR, Mode Shift
13	J813 4301	1			SEAL
14	8350 2612	1			RAIL, Transfer Case Mode Shift
15	J813 4283	1			PIN
16	J813 4280	1			RAIL, Transfer Case Range Shift
17	J813 4299	1			SEAL
18	J813 4300	1			RETAINER
19	8350 0390	1			LEVER, Range Shift
20	J813 4304	1			RING, Snap
21	J813 4303	1			LEVER, Mode Shift
22	J012 0393	1			WASHER
23	J813 4302	1			NUT
24	J813 4285	1			WASHER
25	J813 4409	1			PIN
26	8350 3303	1			SPACER

MODEL CODES

16=Cherokee 2 Dr.(1981-83)
17=Cherokee 2 Dr.(1981-83)
73=Cherokee 2WD-2 Dr.(1984-86)
74=Cherokee 2WD-4 Dr.(1984-86)
18=Cherokee 4 Dr.(1981-83)
77=Cherokee 4WD-2 Dr.(1984-86)
78=Cherokee 4WD-4 Dr.(1984-86)
85=CJ-5 (1981-83)
86=CJ-6(1981)
87=CJ-7(1981-86)
88=CJ-8, Scrambler(1981-86)
64=Comanche 2WD-6 Ft. Box(1986)
66=Comanche 2WD-7 Ft. Box(1986)
63=Comanche 4WD-6 Ft. Box(1986)
65=Comanche 4WD-7 Ft. Box(1986)
15=Grand Wagoneer 4 Dr.(1984-86)
25=J-10 Truck 7 Ft. Box(1981-84)
26=J10 Truck 8 Ft. Box(1981-86)
27=J-20 Truck 8 Ft. Box(1981-86)
15=Wagoneer 4 Dr.(1981-83)
75=Wagoneer 4WD-4 Dr.(1984-86)

BODY
CJ=CJ-5, CJ-6, CJ-7, CJ-8, Scrambler(1981-86)
MJ=Comanche Pickup(1986)

STYLES
SJ=Wagoneer(1981-83), Grand Wagoneer(1984-86), Cherokee(1981-83), J-10, J-20(1981-86)
XJ=Wagoneer(1984-86), Cherokee(1984-86)

AR = Use as Required - = Non Illustrated Part P.A.R. = Paint as Required

« RETURN TO GROUP INDEX

CONTROLS TRANSFER CASE SHIFT DANA MODEL 300 TRANSFER CASE CJ-5,6,7,8, SCRAMBLER
Figure 21M-4000

81J21 4000

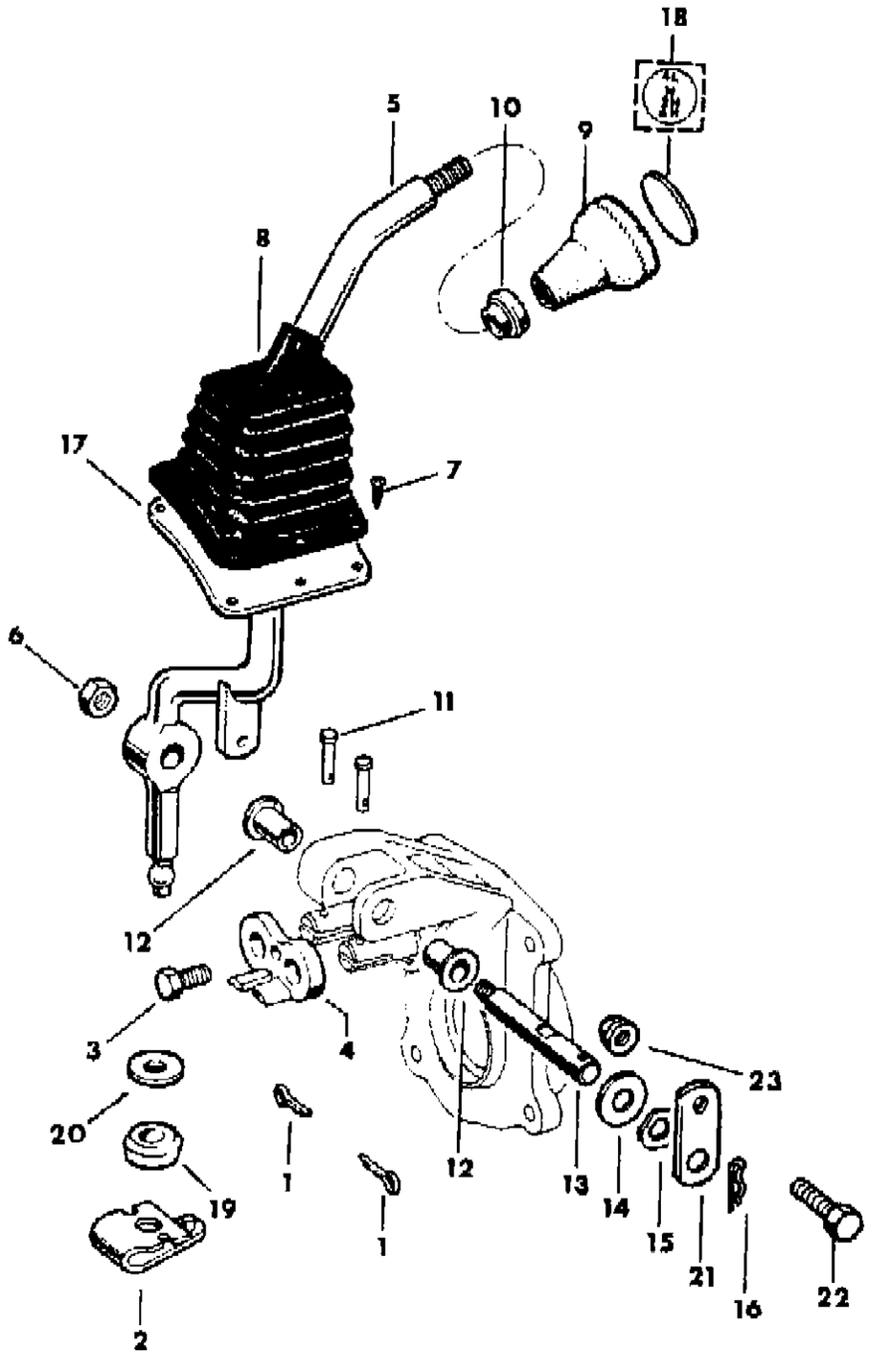

ITEM	PART NUMBER	QTY	BODY	MODEL	DESCRIPTION
1	J011 2726	2			PIN
2	J536 0073	1			LINK
3	J018 0078	1			BOLT
4	J536 0065	1			LINK
5					LEVER, Transfer Case
					Four Cylinder, Left Hand Drive
	J536 3190	1			1981-86: Model T4 or T5 Transmission
	J536 4024	1			1982-86: With T-176 - Four Speed Transmission
	J536 3189	1			With Automatic Transmission
					Four Cylinder, EXPORT, Right Hand Drive
	J536 2085	1			1982-86: With T4 or T5 Transmission
	J536 4027	1			1982-86: With T176 Transmission
					Six Cylinder, Left Hand Drive
	J536 3187	1			1981: With SR4 Manual Transmission
	J536 3190	1			1981-86: With T176 Manual Transmission
	J536 3190	1			1982-86: With T4 or T5 Manual Transmission
	J536 3186	1			With Automatic Transmission
					Six Cylinder, EXPORT, Right Hand Drive
	J536 2883	1			1981: With SR4 Manual Transmission
	J536 2085	1			1981-86: With T-176 Manual Transmission
	J536 2883	1			1982-86: With T4 or T5 Manual Transmission
	J536 2883	1			With Automatic Transmission
	J536 3186	1			Eight Cylinder
					Diesel
	J536 4419	1			1981: EXPORT, Left Hand Drive
	J536 2085	1			1982-86: EXPORT, Right Hand Drive
6	J400 4837	1			NUT
7	J097 4764	6			SCREW
8					BOOT
	J575 2141	1			With Manual Transmission
	J575 2009	1			With Automatic Transmission
9					KNOB, Transfer Case Shift
	J536 1403	1			1981
	J324 1062	1			1982-86
10	J400 6495	1			NUT
11	S045 4038	2			PIN, Clevis
12	J536 0135	2			BUSHING
13	J536 2034	1			SHAFT
14	J400 6884	1			WASHER

MODEL CODES

16=Cherokee 2 Dr.(1981-83)	78=Cherokee 4WD-4 Dr.(1984-86)	64=Comanche 2WD-6 Ft. Box(1986)	25=J-10 Truck 7 Ft. Box(1981-84)
17=Cherokee 2 Dr.(1981-83)	85=CJ-5 (1981-83)	66=Comanche 2WD-7 Ft. Box(1986)	26=J10 Truck 8 Ft. Box(1981-86)
73=Cherokee 2WD-2 Dr.(1984-86)	86=CJ-6(1981)	63=Comanche 4WD-6 Ft. Box(1986)	27=J-20 Truck 8 Ft. Box(1981-86)
74=Cherokee 2WD-4 Dr.(1984-86)	87=CJ-7(1981-86)	65=Comanche 4WD-7 Ft. Box(1986)	15=Wagoneer 4 Dr.(1981-83)
18=Cherokee 4 Dr.(1981-83)	88=CJ-8, Scrambler(1981-86)	15=Grand Wagoneer 4 Dr.(1984-86)	75=Wagoneer 4WD-4 Dr.(1984-86)
77=Cherokee 4WD-2 Dr.(1984-86)			

BODY
CJ=CJ-5, CJ-6, CJ-7, CJ-8, Scrambler(1981-86)
MJ=Comanche Pickup(1986)

STYLES
SJ=Wagoneer(1981-83), Grand Wagoneer(1984-86), Cherokee(1981-83), J-10, J-20(1981-86)
XJ=Wagoneer(1984-86), Cherokee(1984-86)

AR = Use as Required - = Non Illustrated Part P.A.R. = Paint as Required

81J21 4000

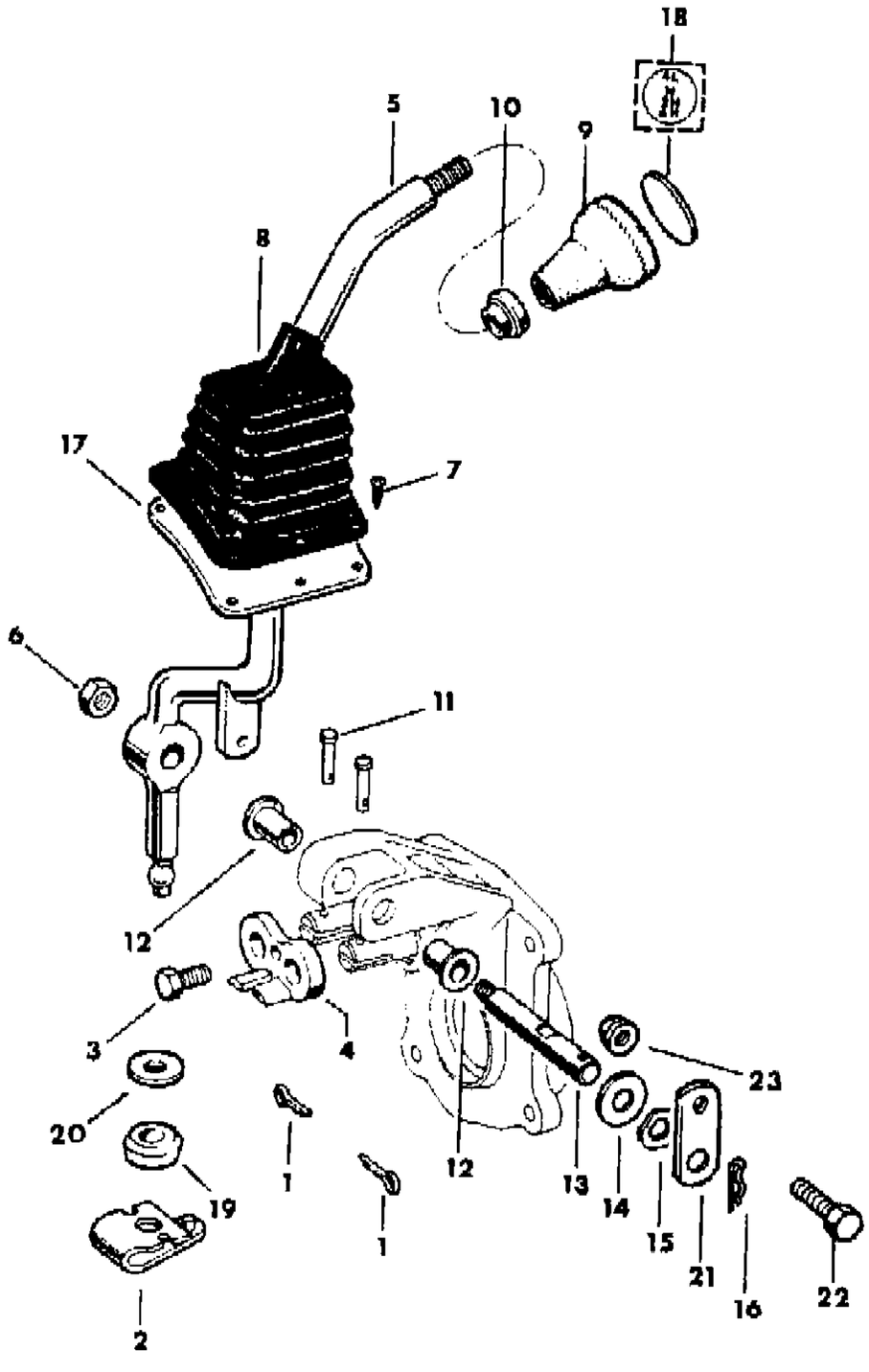

ITEM	PART NUMBER	QTY	BODY	MODEL	DESCRIPTION
15	J400 6483	1			WASHER
16	J400 6486	1			PIN, Hitch
17					GASKET, Transfer Case Boot
	J576 2404	1			With Model T176 Transmission
					With T-4 or T-5 Transmission
	J576 2402	1			Four Cylinder
	J576 2403	1			Six Cylinder
18	J324 1430	1			INSERT, 1982-86
19	J063 7936	1			BUSHING
20	J013 1016	1			WASHER
21	J536 4422	1			LINK
22	S027 4474	1			BOLT
23	J400 3587	1			NUT

MODEL CODES

16=Cherokee 2 Dr.(1981-83)
17=Cherokee 2 Dr.(1981-83)
73=Cherokee 2WD-2 Dr.(1984-86)
74=Cherokee 2WD-4 Dr.(1984-86)
18=Cherokee 4 Dr.(1981-83)
77=Cherokee 4WD-2 Dr.(1984-86)
78=Cherokee 4WD-4 Dr.(1984-86)
85=CJ-5 (1981-83)
86=CJ-6(1981)
87=CJ-7(1981-86)
88=CJ-8, Scrambler(1981-86)
64=Comanche 2WD-6 Ft. Box(1986)
66=Comanche 2WD-7 Ft. Box(1986)
63=Comanche 4WD-6 Ft. Box(1986)
65=Comanche 4WD-7 Ft. Box(1986)
15=Grand Wagoneer 4 Dr.(1984-86)
25=J-10 Truck 7 Ft. Box(1981-84)
26=J10 Truck 8 Ft. Box(1981-86)
27=J-20 Truck 8 Ft. Box(1981-86)
15=Wagoneer 4 Dr.(1981-83)
75=Wagoneer 4WD-4 Dr.(1984-86)

BODY
CJ=CJ-5, CJ-6, CJ-7, CJ-8, Scrambler(1981-86)
MJ=Comanche Pickup(1986)

STYLES
SJ=Wagoneer(1981-83), Grand Wagoneer(1984-86), Cherokee(1981-83), J-10, J-20(1981-86)
XJ=Wagoneer(1984-86), Cherokee(1984-86)

AR = Use as Required - = Non Illustrated Part P.A.R. = Paint as Required

CONTROLS TRANSFER CASE SHIFT 1984-85 XJ WITH N.P.G. 207 WITH DISCONNECT FRONT AXLE, AX-4, AX-5 MANUAL TRANSMISSION
Figure 21M-4100

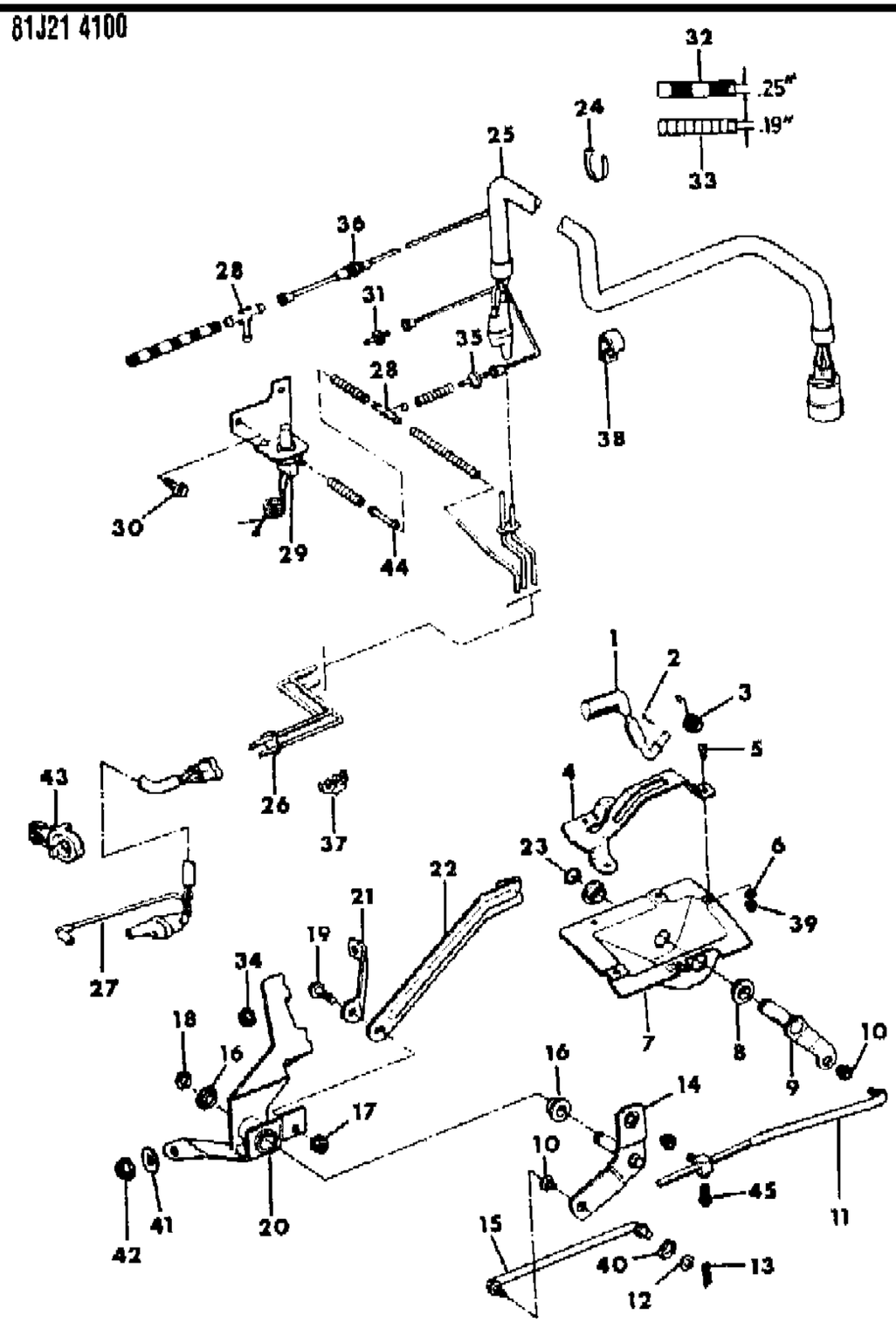

ITEM	PART NUMBER	QTY	BODY	MODEL	DESCRIPTION
1	5300 0579	1			HANDLE, Transfer Case Shift
2	J400 6723	1			PIN, Locking
3	5300 0809	1			SPRING
4	5300 0736	1			GATE ***
5	3420 1277	5			SCREW
6	1150 4118	2			RETAINER
7	5300 1284	1			HOUSING, Shift
8	5300 0639	2			BUSHING
9	5300 0969	1			LEVER
10	J323 8418	3			BUSHING
11	5300 1511	1			ROD, Shift
12	J094 3961	1			WASHER
13	J400 4295	1			PIN
14	5300 0791	1			LEVER
15	5300 0798	1			ROD, Shift
16	5300 1270	2			BUSHING
17	1150 2729	1			NUT
18	3420 1850	1			RING, Retaining
19	1150 2850	1			BOLT
20					BRACKET
	5300 1271	1			With Transmission 8953001547, 8953001548, 8953001551, 8953001552, 8953002269 or 8953002270
	5300 1601	1			With Transmission 8953001565 or 8953001566
21	5300 1497	1			BRACE
22	5300 0787	1			BRACE
23	1150 5389	1			REING, Retaining ***
24	J369 3058	4			STRAP
25	5300 1100	1			HARNESS, Vacuum ***
26	5300 1412	1			TUBE ASSEMBLY, Vacuum ***
27	5300 1408	1			HARNESS, Vacuum ***
28	J323 2982	2			TEE
29	5300 1102	1			SWITCH ASSEMBLY, 4WD Indicator Lamp
30	S150 0063	2			BOLT
31	8351 0053	1			FILTER, Vacuum
32	8330 0050	1			HOSE, Vacuum (Bulk)
33	J812 5812	1			HOSE, Vacuum (Bulk)
34	J400 6681	1			NUT
35	J322 8426	1			VALVE, Vacuum
36	J536 4511	1			VALVE, Vacuum

MODEL CODES
16=Cherokee 2 Dr.(1981-83)
17=Cherokee 2 Dr.(1981-83)
73=Cherokee 2WD-2 Dr.(1984-86)
74=Cherokee 2WD-4 Dr.(1984-86)
18=Cherokee 4 Dr.(1981-83)
77=Cherokee 4WD-2 Dr.(1984-86)
78=Cherokee 4WD-4 Dr.(1984-86)
85=CJ-5 (1981-83)
86=CJ-6(1981)
87=CJ-7(1981-86)
88=CJ-8, Scrambler(1981-86)
64=Comanche 2WD-6 Ft. Box(1986)
66=Comanche 2WD-7 Ft. Box(1986)
63=Comanche 4WD-6 Ft. Box(1986)
65=Comanche 4WD-7 Ft. Box(1986)
15=Grand Wagoneer 4 Dr.(1984-86)
25=J-10 Truck 7 Ft. Box(1981-84)
26=J10 Truck 8 Ft. Box(1981-86)
27=J-20 Truck 8 Ft. Box(1981-86)
15=Wagoneer 4 Dr.(1981-83)
75=Wagoneer 4WD-4 Dr.(1984-86)

BODY
CJ=CJ-5, CJ-6, CJ-7, CJ-8, Scrambler(1981-86)
MJ=Comanche Pickup(1986)

STYLES
SJ=Wagoneer(1981-83), Grand Wagoneer(1984-86), Cherokee(1981-83), J-10, J-20(1981-86)
XJ=Wagoneer(1984-86), Cherokee(1984-86)

AR = Use as Required - = Non Illustrated Part P.A.R. = Paint as Required

CONTROLS TRANSFER CASE SHIFT 1984-85 XJ WITH N.P.G. 207 WITH DISCONNECT FRONT AXLE, AX-4, AX-5 MANUAL TRANSMISSION
Figure 21M-4100

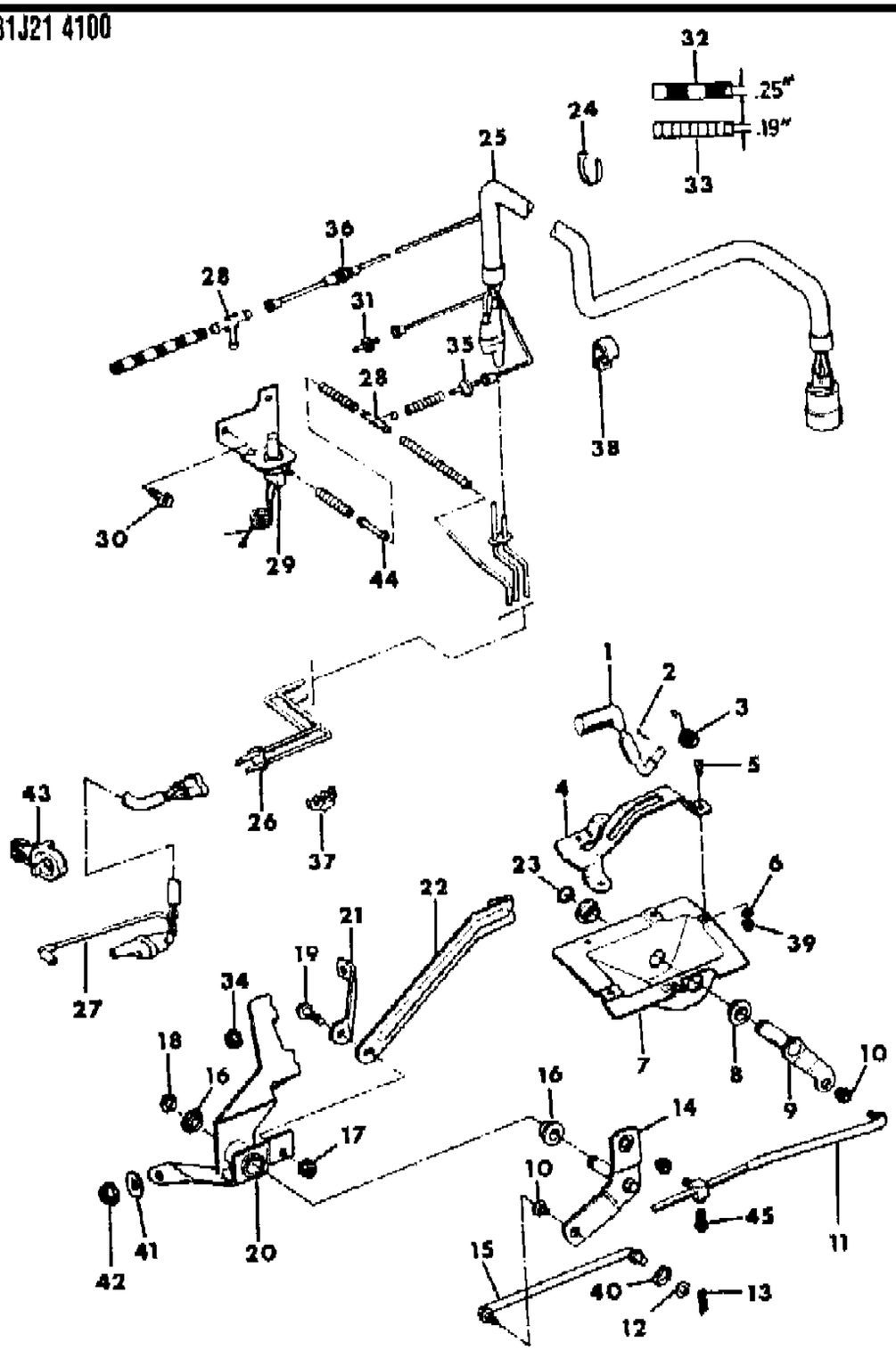

ITEM	PART NUMBER	QTY	BODY	MODEL	DESCRIPTION
37	5300 1242	2			CLIP, Retaining
38	J012 5928	1			CLIP, Retaining
39	3420 2050	5			NUTSERT ***
40	J081 5535	1			WASHER, Spring
41	1150 0324	1			WASHER
42	3420 2002	1			NUT
43	3420 1633	3			CLIP
44	J322 0180	1			CONNECTOR
45	J400 6036	1			BOLT

MODEL CODES

16=Cherokee 2 Dr.(1981-83)
17=Cherokee 2 Dr.(1981-83)
73=Cherokee 2WD-2 Dr.(1984-86)
74=Cherokee 2WD-4 Dr.(1984-86)
18=Cherokee 4 Dr.(1981-83)
77=Cherokee 4WD-2 Dr.(1984-86)
78=Cherokee 4WD-4 Dr.(1984-86)
85=CJ-5 (1981-83)
86=CJ-6(1981)
87=CJ-7(1981-86)
88=CJ-8, Scrambler(1981-86)
64=Comanche 2WD-6 Ft. Box(1986)
66=Comanche 2WD-7 Ft. Box(1986)
63=Comanche 4WD-6 Ft. Box(1986)
65=Comanche 4WD-7 Ft. Box(1986)
15=Grand Wagoneer 4 Dr.(1984-86)
25=J-10 Truck 7 Ft. Box(1981-84)
26=J10 Truck 8 Ft. Box(1981-86)
27=J-20 Truck 8 Ft. Box(1981-86)
15=Wagoneer 4 Dr.(1981-83)
75=Wagoneer 4WD-4 Dr.(1984-86)

BODY
CJ=CJ-5, CJ-6, CJ-7, CJ-8, Scrambler(1981-86)
MJ=Comanche Pickup(1986)

STYLES
SJ=Wagoneer(1981-83), Grand Wagoneer(1984-86), Cherokee(1981-83), J-10, J-20(1981-86)
XJ=Wagoneer(1984-86), Cherokee(1984-86)

AR = Use as Required - = Non Illustrated Part P.A.R. = Paint as Required

« RETURN TO GROUP INDEX

CONTROLS, TRANSFER CASE SHIFT 1985 XJ WITH N.P.G. 207, WITH DISCONNECT FRONT AXLE, T-4, T-5 MANUAL TRANSMISSION
Figure 21M-4200

81J21 4200

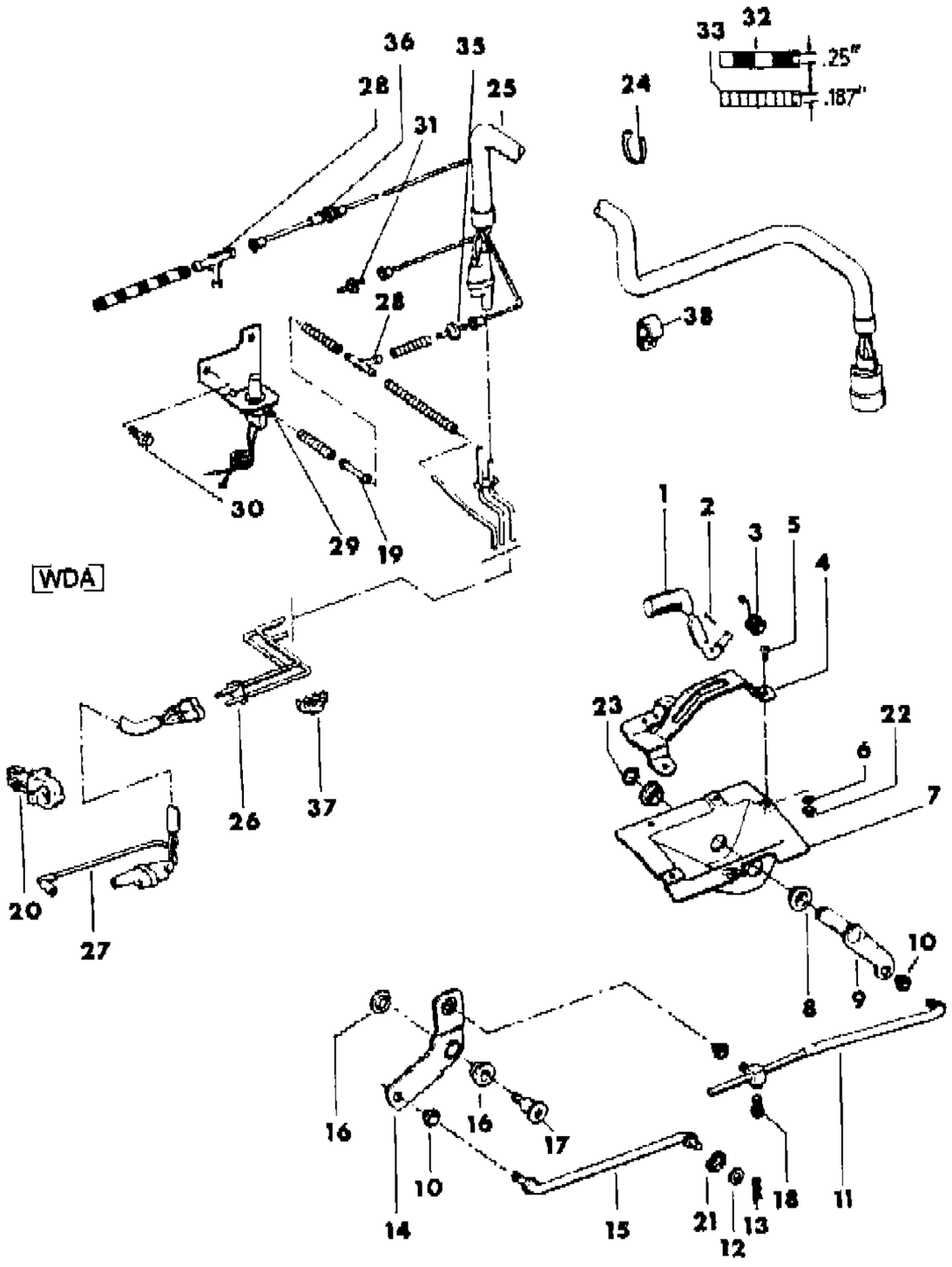

ITEM	PART NUMBER	QTY	BODY	MODEL	DESCRIPTION
1	5300 0579	1			HANDLE, Transfer Case Shift
2	J400 6723	1			PIN, Locking
3	5300 0809	1			SPRING
4	5300 0736	1			GATE ***
5	3420 1277	5			SCREW
6	1150 4118	2			RETAINER
7	5300 1284	1			HOUSING, Shift
8	5300 0639	2			BUSHING
9	5300 0969	1			LEVER
10	J323 8418	3			BUSHING
11					ROD, Shift
	5300 2090	1			With Gas Engine
	5300 1718	1			With Diesel Engine
12	J094 3961	1			WASHER
13	J400 4295	1			PIN
14	5300 1715	1			LEVER
15	5300 1728	1			ROD, Shift
16	5300 1716	2			BUSHING
17	3420 2087	1			PIVOT
18	J400 6036	1			BOLT
19	J322 0180	1			CONNECTOR
20	3420 1633	3			CLIP
21	J081 5535	1			WASHER, Spring
22	3420 2050	5			NUTSERT ***
23	1150 5389	1			RING, Retaining
24	J369 3058	4			STRAP
25	5300 1100	1			HARNESS, Vacuum ***
26	5300 1412	1			TUBE ASSEMBLY, Vacuum ***
27	5300 1408	1			HARNESS, Vacuum ***
28	J323 2982	2			TEE
29	5300 1102	1			SWITCH ASSEMBLY, 4WD Indicator Lamp
30	S150 0063	2			SCREW
31	8351 0053	1			FILTER, Vacuum
32	8330 0080	1			HOSE, Vacuum (Bulk)
33	J812 5812	1			HOSE, Vacuum (Bulk)
35	J322 8426	1			VALVE, Vacuum
36	J536 4511	1			VALVE, Vacuum
37	5300 1242	2			CLIP, Retaining
38	J012 5928	1			CLIP, Retaining

MODEL CODES

16=Cherokee 2 Dr.(1981-83)
17=Cherokee 2 Dr.(1981-83)
73=Cherokee 2WD-2 Dr.(1984-86)
74=Cherokee 2WD-4 Dr.(1984-86)
18=Cherokee 4 Dr.(1981-83)
77=Cherokee 4WD-2 Dr.(1984-86)
78=Cherokee 4WD-4 Dr.(1984-86)
85=CJ-5 (1981-83)
86=CJ-6(1981)
87=CJ-7(1981-86)
88=CJ-8, Scrambler(1981-86)
64=Comanche 2WD-6 Ft. Box(1986)
66=Comanche 2WD-7 Ft. Box(1986)
63=Comanche 4WD-6 Ft. Box(1986)
65=Comanche 4WD-7 Ft. Box(1986)
15=Grand Wagoneer 4 Dr.(1984-86)
25=J-10 Truck 7 Ft. Box(1981-84)
26=J10 Truck 8 Ft. Box(1981-86)
27=J-20 Truck 8 Ft. Box(1981-86)
15=Wagoneer 4 Dr.(1981-83)
75=Wagoneer 4WD-4 Dr.(1984-86)

BODY
CJ=CJ-5, CJ-6, CJ-7, CJ-8, Scrambler(1981-86)
MJ=Comanche Pickup(1986)

STYLES
SJ=Wagoneer(1981-83), Grand Wagoneer(1984-86), Cherokee(1981-83), J-10, J-20(1981-86)
XJ=Wagoneer(1984-86), Cherokee(1984-86)

AR = Use as Required - = Non Illustrated Part P.A.R. = Paint as Required

« RETURN TO GROUP INDEX

CONTROLS, TRANSFER CASE SHIFT 1984-85 XJ WITH N.P.G. 207, WITH DISCONNECT FRONT AXLE, WITH AUTOMATIC TRANSMISSION
Figure 21M-4300

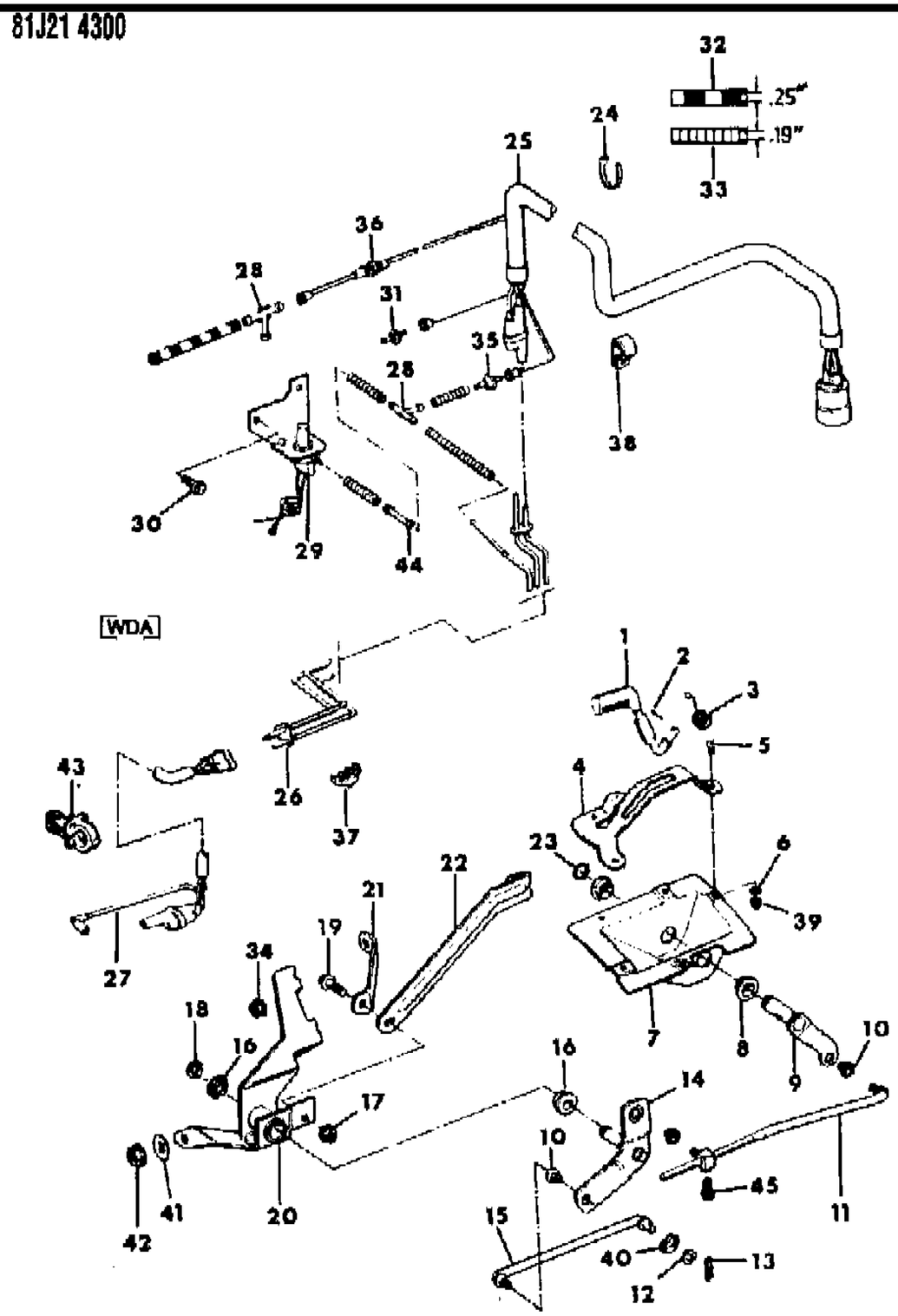

ITEM	PART NUMBER	QTY	BODY	MODEL	DESCRIPTION
1	5300 0579	1			HANDLE, Transfer Case Shift
2	J400 6723	1			PIN, Locking
3	5300 0809	1			SPRING
4	5300 0736	1			GATE ***
5	3420 1277	5			SCREW
6	1150 4118	2			RETAINER
7	5300 1284	1			HOUSING, Shift
8	5300 0639	2			BUSHING
9	5300 0969	1			LEVER
10	J323 8418	3			BUSHING
11					ROD, Shift
	5300 1511	1			With Gas Engine
	5300 2150	1			With Diesel Engine
12	J094 3961	1			WASHER
13	J400 4295	1			PIN
14	5300 0791	1			LEVER
15	5300 0798	1			ROD, Shift
16	5300 1270	2			BUSHING
17	1150 2729	1			NUT
18	3420 1850	1			RING, Retaining
19	1150 2850	1			BOLT
20					BRACKET
	5300 1597	1			With Gas Engine
	5300 2122	1			With Diesel Engine
21	5300 1497	1			BRACE
22	5300 0787	1			BRACE
23	1150 5389	1			RIING, Retaining ***
24	J369 3058	4			STRAP
25	5300 1100	1			HARNESS, Vacuum ***
26	5300 1412	1			TUBE ASSSEMBLY, Vacuum ***
27	5300 1408	1			HARNESS, Vacuum ***
28	J323 2982	2			TEE
29	5300 1102	1			SWITCH ASSEMBLY, 4WD Indicator Lamp
30	S150 0063	2			SCREW
31	8351 0053	1			FILTER, Vacuum
32	J812 5813	1			HOSE, Vacuum (Bulk)
33	J812 5812	1			HOSE, Vacuum (Bulk)
34	J400 6681	1			NUT
35	J322 8426	1			VALVE, Vacuum

MODEL CODES

16=Cherokee 2 Dr.(1981-83)
17=Cherokee 2 Dr.(1981-83)
73=Cherokee 2WD-2 Dr.(1984-86)
74=Cherokee 2WD-4 Dr.(1984-86)
18=Cherokee 4 Dr.(1981-83)
77=Cherokee 4WD-2 Dr.(1984-86)
78=Cherokee 4WD-4 Dr.(1984-86)
85=CJ-5 (1981-83)
86=CJ-6(1981)
87=CJ-7(1981-86)
88=CJ-8, Scrambler(1981-86)
64=Comanche 2WD-6 Ft. Box(1986)
66=Comanche 2WD-7 Ft. Box(1986)
63=Comanche 4WD-6 Ft. Box(1986)
65=Comanche 4WD-7 Ft. Box(1986)
15=Grand Wagoneer 4 Dr.(1984-86)
25=J-10 Truck 7 Ft. Box(1981-84)
26=J10 Truck 8 Ft. Box(1981-86)
27=J-20 Truck 8 Ft. Box(1981-86)
15=Wagoneer 4 Dr.(1981-83)
75=Wagoneer 4WD-4 Dr.(1984-86)

BODY
CJ=CJ-5, CJ-6, CJ-7, CJ-8, Scrambler(1981-86)
MJ=Comanche Pickup(1986)

STYLES
SJ=Wagoneer(1981-83), Grand Wagoneer(1984-86), Cherokee(1981-83), J-10, J-20(1981-86)
XJ=Wagoneer(1984-86), Cherokee(1984-86)

AR = Use as Required - = Non Illustrated Part P.A.R. = Paint as Required

« RETURN TO GROUP INDEX »

CONTROLS, TRANSFER CASE SHIFT 1984-85 XJ WITH N.P.G. 207, WITH DISCONNECT FRONT AXLE, WITH AUTOMATIC TRANSMISSION
Figure 21M-4300

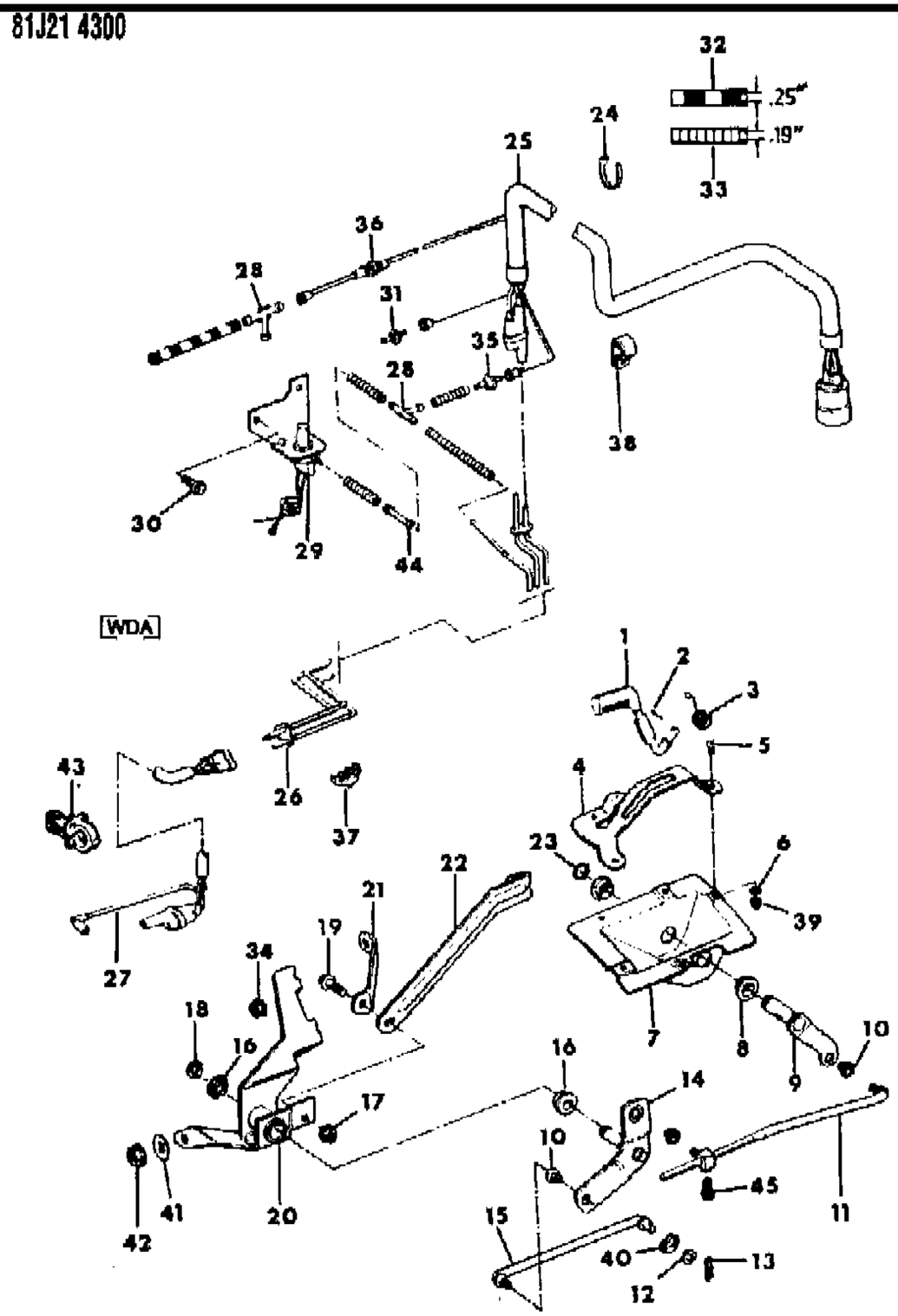

ITEM	PART NUMBER	QTY	BODY	MODEL	DESCRIPTION
36	J536 4511	1			VALVE, Vacuum
37	5300 1242	2			CLIP, Retaining
38	J012 5928	1			CLIP, Retaining
39	3420 2050	5			NUTSERT ***
40	J081 5535	1			WASHER, Spring
41	1150 0324	1			WASHER
42	3420 2002	1			NUT
43	3420 1633	3			CLIP
44	J322 0180	1			CONNECTOR
45	J400 6036	1			BOLT

MODEL CODES

16=Cherokee 2 Dr.(1981-83)
17=Cherokee 2 Dr.(1981-83)
73=Cherokee 2WD-2 Dr.(1984-86)
74=Cherokee 2WD-4 Dr.(1984-86)
18=Cherokee 4 Dr.(1981-83)
77=Cherokee 4WD-2 Dr.(1984-86)
78=Cherokee 4WD-4 Dr.(1984-86)
85=CJ-5 (1981-83)
86=CJ-6(1981)
87=CJ-7(1981-86)
88=CJ-8, Scrambler(1981-86)
64=Comanche 2WD-6 Ft. Box(1986)
66=Comanche 2WD-7 Ft. Box(1986)
63=Comanche 4WD-6 Ft. Box(1986)
65=Comanche 4WD-7 Ft. Box(1986)
15=Grand Wagoneer 4 Dr.(1984-86)
25=J-10 Truck 7 Ft. Box(1981-84)
26=J10 Truck 8 Ft. Box(1981-86)
27=J-20 Truck 8 Ft. Box(1981-86)
15=Wagoneer 4 Dr.(1981-83)
75=Wagoneer 4WD-4 Dr.(1984-86)

BODY
CJ=CJ-5, CJ-6, CJ-7, CJ-8, Scrambler(1981-86)
MJ=Comanche Pickup(1986)

STYLES
SJ=Wagoneer(1981-83), Grand Wagoneer(1984-86), Cherokee(1981-83), J-10, J-20(1981-86)
XJ=Wagoneer(1984-86), Cherokee(1984-86)

AR = Use as Required - = Non Illustrated Part P.A.R. = Paint as Required

« RETURN TO GROUP INDEX

CONTROLS, TRANSFER CASE SHIFT 1986 - XJ, MJ WITH N.P.G. 207
Figure 21M-4400

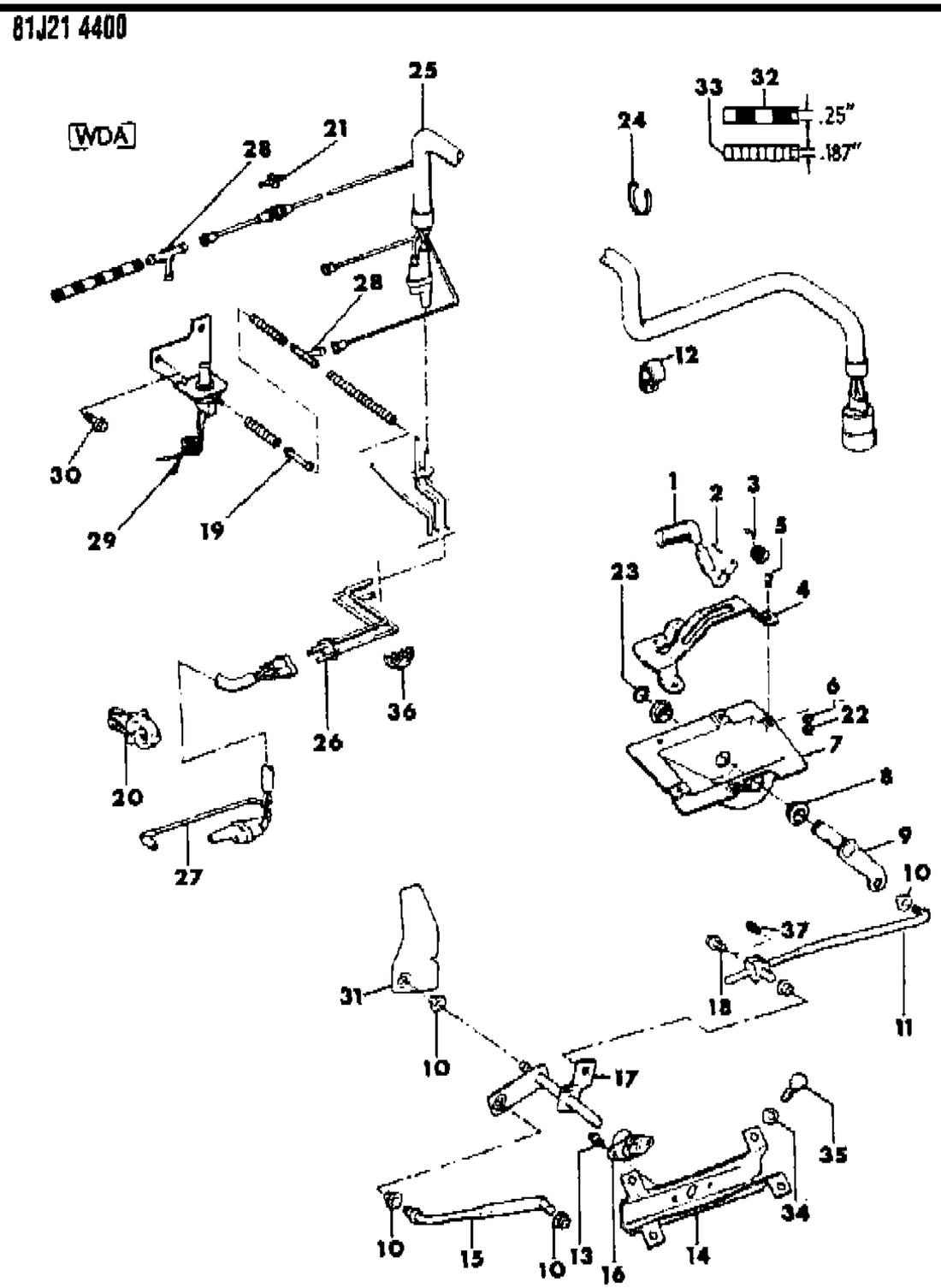

ITEM	PART NUMBER	QTY	BODY	MODEL	DESCRIPTION
1	5300 3354	1			HANDLE, Transfer Case Shift
2	J400 6723	1			PIN, Locking
3	5300 0809	1			SPRING
4	5300 0736	1			GATE ***
5	3420 1277	5			SCREW
6	1150 4118	2			RETAINER
7	5300 1284	1			HOUSING, Shift
8	5300 0639	2			BUSHING
9	5300 0969	1			LEVER
10	J323 8418	5			BUSHING
11					ROD, Shift
	5300 2959	1			Gas
	5300 2963	1			Diesel
12	J012 5928	1			CLIP, Retaining
13	1150 2453	2			BOLT
14	5300 2965	1			BRACKET
15	5300 2960	1			ROD, Shift
16	5300 3355	1			BEARING
17	5300 3352	12			PIVOT
18	J400 6036	1			BOLT
19	J322 0180	1			CONNECTOR
20	3420 1633	3			CLIP
21	J536 4511	1			VALVE, Vacuum
22	3420 1578	5			NUTSERT ***
23	1150 5389	1			RING, Retaining
24	J369 3058	4			STRAP
25	5300 1100	1			HARNESS, Vacuum ***
26	5300 1412	1			TUBE ASSEMBLY, Vacuum ***
27	5300 1408	1			HARNESS, Vacuum ***
28	J323 2982	2			TEE
29	5300 1102	1			SWITCH ASSEMBLY, 4WD Indicator Lamp
30	S150 0063	2			BOLT
31	5300 2956	1			BRACKET
32	8330 0080	1			HOSE, Vacuum (BULK)
33	J812 5812	1			HOSE, Vacuum (Bulk)
34	J044 6188	4			WASHER
35	3420 1726	4			BOLT
36	5300 1242	2			CLIP, Retaining
37	J400 7498	1			SCREW, Set

MODEL CODES
16=Cherokee 2 Dr.(1981-83)
17=Cherokee 2 Dr.(1981-83)
73=Cherokee 2WD-2 Dr.(1984-86)
74=Cherokee 2WD-4 Dr.(1984-86)
18=Cherokee 4 Dr.(1981-83)
77=Cherokee 4WD-2 Dr.(1984-86)
78=Cherokee 4WD-4 Dr.(1984-86)
85=CJ-5 (1981-83)
86=CJ-6(1981)
87=CJ-7(1981-86)
88=CJ-8, Scrambler(1981-86)
64=Comanche 2WD-6 Ft. Box(1986)
66=Comanche 2WD-7 Ft. Box(1986)
63=Comanche 4WD-6 Ft. Box(1986)
65=Comanche 4WD-7 Ft. Box(1986)
15=Grand Wagoneer 4 Dr.(1984-86)
25=J-10 Truck 7 Ft. Box(1981-84)
26=J10 Truck 8 Ft. Box(1981-86)
27=J-20 Truck 8 Ft. Box(1981-86)
15=Wagoneer 4 Dr.(1981-83)
75=Wagoneer 4WD-4 Dr.(1984-86)

BODY
CJ=CJ-5, CJ-6, CJ-7, CJ-8, Scrambler(1981-86)
MJ=Comanche Pickup(1986)

STYLES
SJ=Wagoneer(1981-83), Grand Wagoneer(1984-86), Cherokee(1981-83), J-10, J-20(1981-86)
XJ=Wagoneer(1984-86), Cherokee(1984-86)

AR = Use as Required - = Non Illustrated Part P.A.R. = Paint as Required

« RETURN TO GROUP INDEX

CONTROLS, TRANSFER CASE SHIFT 1984-85 XJ WITH N.P.G. 229 AND DISCONNECT FRONT AXLE
Figure 21M-4500

81J21 4500

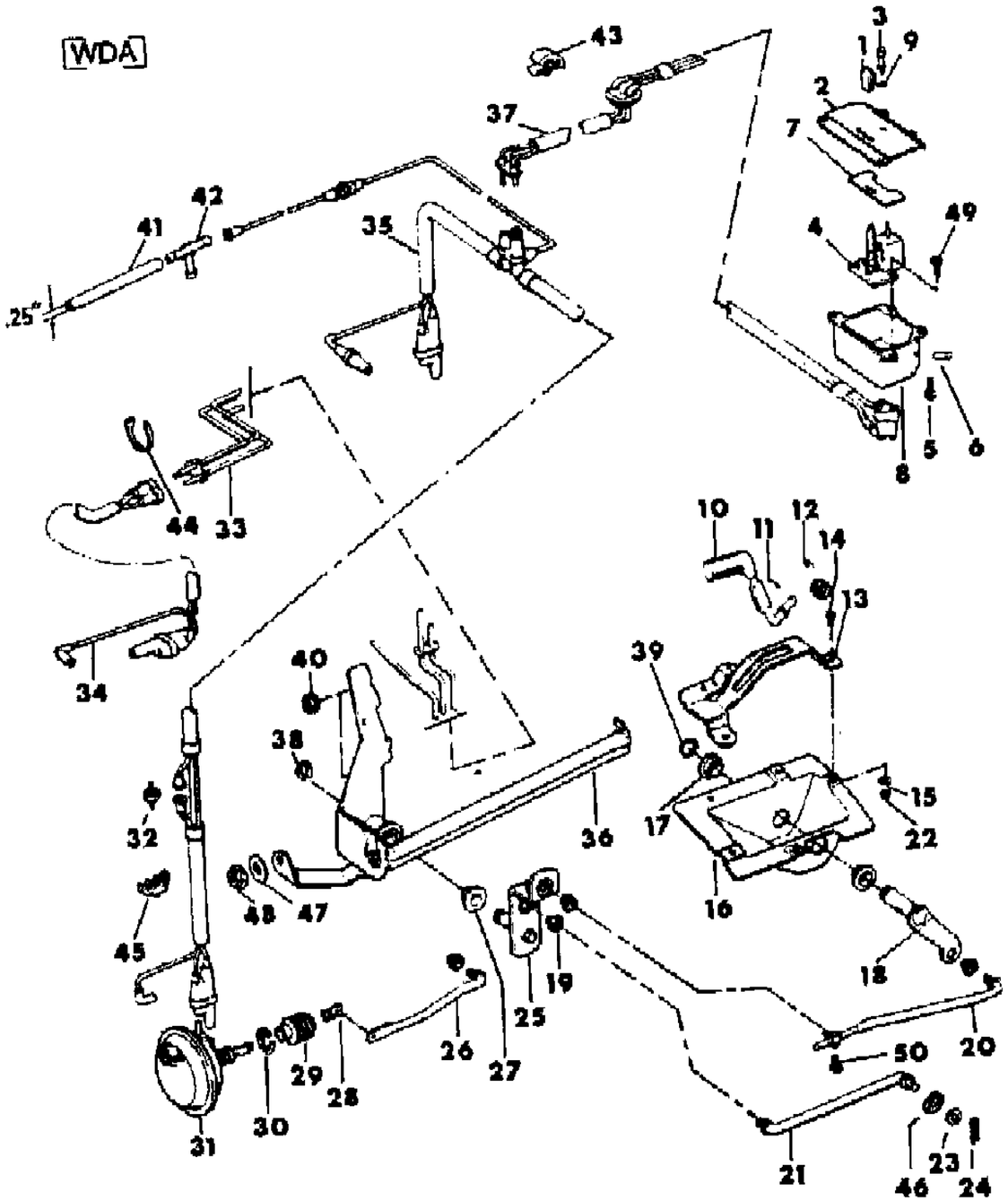

ITEM	PART NUMBER	QTY	BODY	MODEL	DESCRIPTION
1	5300 1617	1			KNOB, Selec Trac
2	5300 1616	1			BEZEL, Selec Trac
3	5300 0780	1			KNOB, Vacuum Shift
4	5300 0644	1			SWITCH, Vacuum
5	1150 2843	4			SCREW
6	S943 7448	1			BULB
7	5300 0726	1			SHIELD
8	5300 0642	1			HOUSING, Vacuum Switch
9	5300 0779	1			GASKET
10	5300 0579	1			HANDLE, Transfer Case Shift
11	J400 6723	1			PIN, Locking
12	5300 0809	1			SPRING
13	5300 0900	1			GATE ***
14	3420 1277	5			SCREW
15	1150 4118	2			RETAINER
16	5300 1284	1			HOUSING, Shift
17	5300 0639	2			BUSHING
18	5300 0969	1			LEVER
19	J323 8418	3			BUSHING
20	5300 1564	1			ROD, Shift
21	5300 0793	1			ROD, Shift
22	3420 2050	5			NUTSERT ***
23	J094 3961	1			WASHER
24	J400 4295	1			PIN
25	5300 0801	1			ROD, Shift
26	5300 1513	1			ROD, Vacuum Motor
27	5300 1270	2			BUSHING
28	J324 1415	1			CLIP
29	J324 0126	1			BOOT
30	J400 6924	1			RING, Snap
31	5300 4597	1			MOTOR, Transfer Case Vacuum
32	J536 4511	3			VALVE
33	5300 1412	1			TUBE ASSEMBLY, Vacuum ***
34	5300 1408	1			HARNESS, Vacuum ***
35	5300 0850	1			HARNESS, Vacuum ***
36	5300 0785	1			BRACKET
37	5300 0732	1			HARNESS, Vacuum ***
38	3420 1850	1			RING, Retaining
39	1150 5389	1			RING, Retaining

MODEL CODES

16=Cherokee 2 Dr.(1981-83)
17=Cherokee 2 Dr.(1981-83)
73=Cherokee 2WD-2 Dr.(1984-86)
74=Cherokee 2WD-4 Dr.(1984-86)
18=Cherokee 4 Dr.(1981-83)
77=Cherokee 4WD-2 Dr.(1984-86)
78=Cherokee 4WD-4 Dr.(1984-86)
85=CJ-5 (1981-83)
86=CJ-6(1981)
87=CJ-7(1981-86)
88=CJ-8, Scrambler(1981-86)
64=Comanche 2WD-6 Ft. Box(1986)
66=Comanche 2WD-7 Ft. Box(1986)
63=Comanche 4WD-6 Ft. Box(1986)
65=Comanche 4WD-7 Ft. Box(1986)
15=Grand Wagoneer 4 Dr.(1984-86)
25=J-10 Truck 7 Ft. Box(1981-84)
26=J10 Truck 8 Ft. Box(1981-86)
27=J-20 Truck 8 Ft. Box(1981-86)
15=Wagoneer 4 Dr.(1981-83)
75=Wagoneer 4WD-4 Dr.(1984-86)

BODY
CJ=CJ-5, CJ-6, CJ-7, CJ-8, Scrambler(1981-86)
MJ=Comanche Pickup(1986)

STYLES
SJ=Wagoneer(1981-83), Grand Wagoneer(1984-86), Cherokee(1981-83), J-10, J-20(1981-86)
XJ=Wagoneer(1984-86), Cherokee(1984-86)

AR = Use as Required - = Non Illustrated Part P.A.R. = Paint as Required

« RETURN TO GROUP INDEX »

CONTROLS, TRANSFER CASE SHIFT 1984-85 XJ WITH N.P.G. 229 AND DISCONNECT FRONT AXLE
Figure 21M-4500

81J21 4500

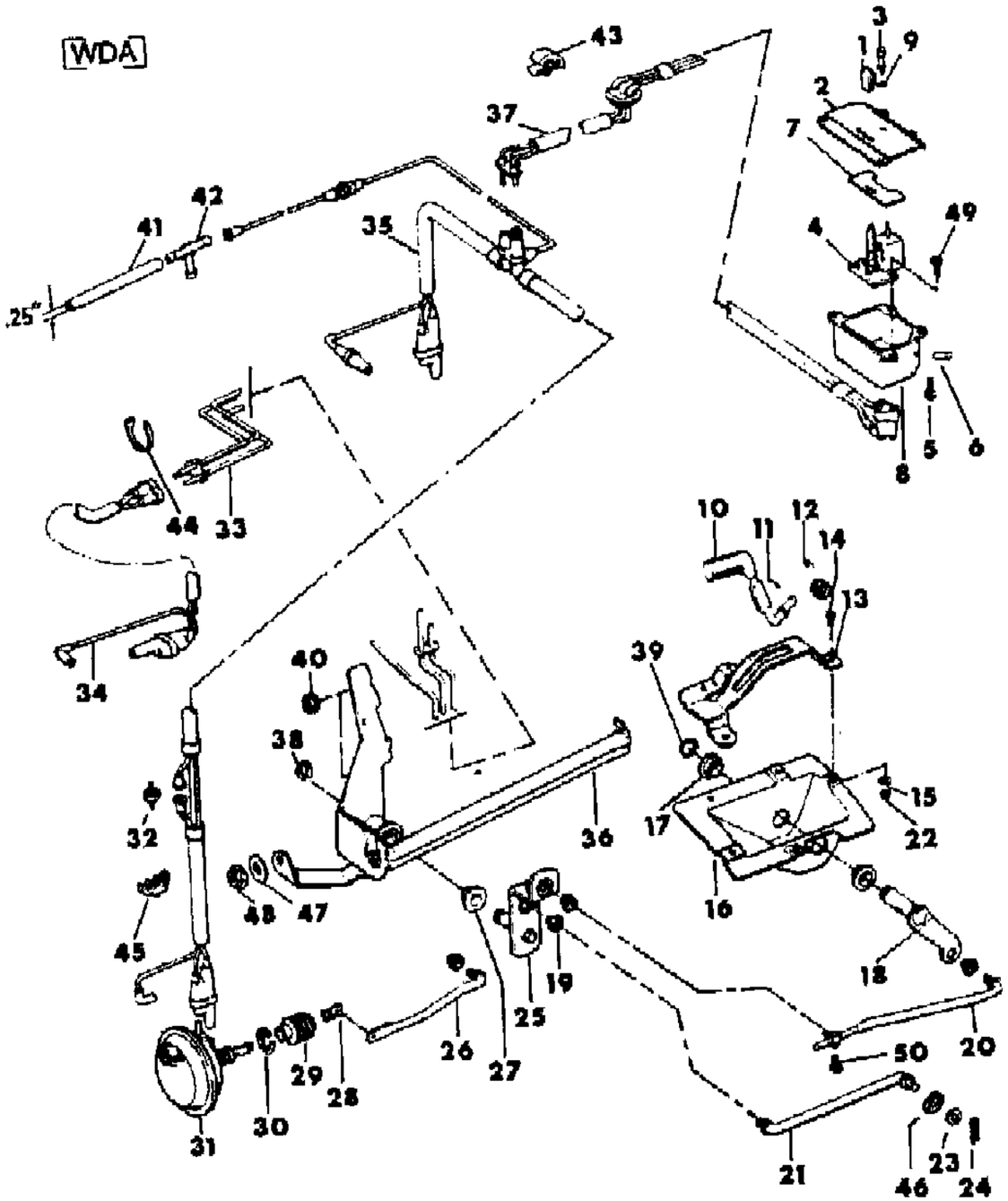

ITEM	PART NUMBER	QTY	BODY	MODEL	DESCRIPTION
40	J400 6681	1			NUT
41	J812 5813	1			HOSE, Vacuum (Bulk)
42	J323 2982	1			TEE
43	3420 1656	2			CLIP, Retaining
44	J369 3058	4			STRAP
45	5300 1242	2			CLIP, Retaining
46	J081 5535	1			WASHER, Spring
47	1150 0324	1			WASHER
48	3420 2002	1			NUT
49	3420 1298	2			SCREW
50	J400 6036				BOLT

MODEL CODES

16=Cherokee 2 Dr.(1981-83)
17=Cherokee 2 Dr.(1981-83)
73=Cherokee 2WD-2 Dr.(1984-86)
74=Cherokee 2WD-4 Dr.(1984-86)
18=Cherokee 4 Dr.(1981-83)
77=Cherokee 4WD-2 Dr.(1984-86)
78=Cherokee 4WD-4 Dr.(1984-86)
85=CJ-5 (1981-83)
86=CJ-6(1981)
87=CJ-7(1981-86)
88=CJ-8, Scrambler(1981-86)
64=Comanche 2WD-6 Ft. Box(1986)
66=Comanche 2WD-7 Ft. Box(1986)
63=Comanche 4WD-6 Ft. Box(1986)
65=Comanche 4WD-7 Ft. Box(1986)
15=Grand Wagoneer 4 Dr.(1984-86)
25=J-10 Truck 7 Ft. Box(1981-84)
26=J10 Truck 8 Ft. Box(1981-86)
27=J-20 Truck 8 Ft. Box(1981-86)
15=Wagoneer 4 Dr.(1981-83)
75=Wagoneer 4WD-4 Dr.(1984-86)

BODY
CJ=CJ-5, CJ-6, CJ-7, CJ-8, Scrambler(1981-86)
MJ=Comanche Pickup(1986)

STYLES
SJ=Wagoneer(1981-83), Grand Wagoneer(1984-86), Cherokee(1981-83), J-10, J-20(1981-86)
XJ=Wagoneer(1984-86), Cherokee(1984-86)

AR = Use as Required - = Non Illustrated Part P.A.R. = Paint as Required

« RETURN TO GROUP INDEX

CONTROLS, TRANSFER CASE SHIFT 1984-86 XJ, MJ WITH N.P.G. 228 OR 229 WITHOUT DISCONNECT FRONT AXLE
Figure 21M-4600

81J21 4600

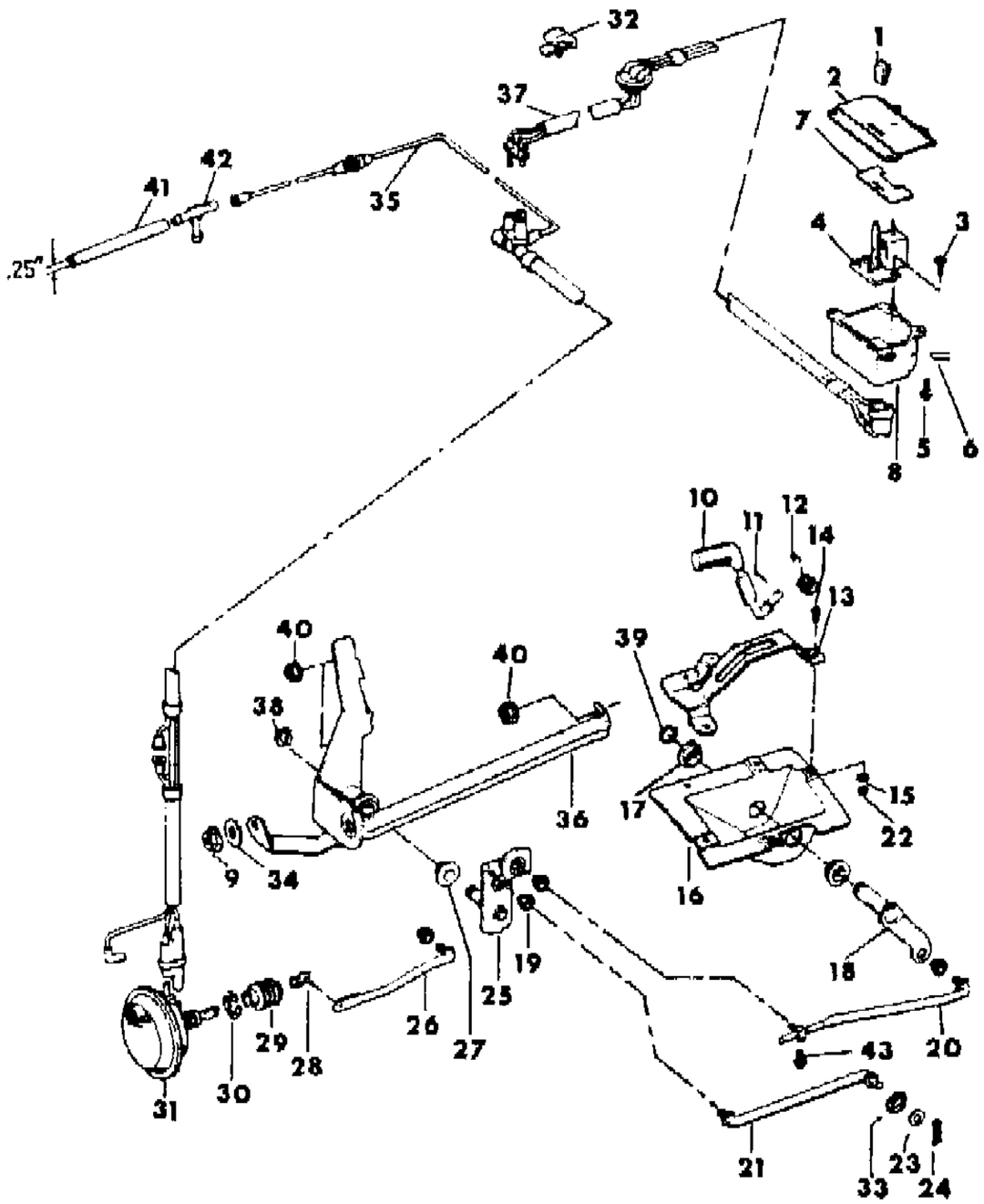

ITEM	PART NUMBER	QTY	BODY	MODEL	DESCRIPTION
1	5300 1617	1			KNOB, Selec-Trac
2	5300 1995	1			BEZEL, Selec Trac
3	3420 1298	2			SCREW
4	5300 2000	1			SWITCH, Vacuum
5	1150 2843	4			SCREW
6	S943 7448	1			BULB
7	5300 0726	1			SHIELD
8	5300 0642	1			HOUSING, Vacuum Switch
9	3420 2002	1			NUT
10	5300 0579	1			HANDLE, Transfer Case Shift
11	J400 6723	1			PIN, Locking
12	5300 0809	1			SPRING
13	5300 0900	1			GATE ***
14	3420 1277	5			SCREW
15	1150 4118	2			RETAINER
16	5300 1284	1			HOUSING, Shift
17	5300 0639	2			BUSHING
18	5300 0969	1			LEVER
19	J323 8418	3			BUSHING
20					ROD, Shift
	5300 1564	1			With Gas Engine
	5300 2151	1			With Diesel Engine
21	5300 0793	1			ROD, Shift
22	3420 2050	5			NUTSERT ***
23	J094 3961	1			WASHER
24	J400 4295	1			PIN
25	5300 0801	1			ROD, Shift
26	5300 1513	1			ROD, Vacuum Motor
27	5300 1270	2			BUSHING
28	J324 1415	1			CLIP
29	J324 0126	1			BOOT
30	J400 6924	1			RING, Snap
31	5300 4596	1			MOTOR, Transfer Case Vacuum
32	3420 1656	2			CLIP, Retaining
33	J081 5535	1			WASHER, Spring
34	1150 0324	1			WASHER
35	5300 1998	1			HARNESS, Vacuum ***
36					BRACKET
	5300 0785	1			With Gas Engine

MODEL CODES
16=Cherokee 2 Dr.(1981-83)
17=Cherokee 2 Dr.(1981-83)
73=Cherokee 2WD-2 Dr.(1984-86)
74=Cherokee 2WD-4 Dr.(1984-86)
18=Cherokee 4 Dr.(1981-83)
77=Cherokee 4WD-2 Dr.(1984-86)
78=Cherokee 4WD-4 Dr.(1984-86)
85=CJ-5 (1981-83)
86=CJ-6(1981)
87=CJ-7(1981-86)
88=CJ-8, Scrambler(1981-86)
64=Comanche 2WD-6 Ft. Box(1986)
66=Comanche 2WD-7 Ft. Box(1986)
63=Comanche 4WD-6 Ft. Box(1986)
65=Comanche 4WD-7 Ft. Box(1986)
15=Grand Wagoneer 4 Dr.(1984-86)
25=J-10 Truck 7 Ft. Box(1981-84)
26=J10 Truck 8 Ft. Box(1981-86)
27=J-20 Truck 8 Ft. Box(1981-86)
15=Wagoneer 4 Dr.(1981-83)
75=Wagoneer 4WD-4 Dr.(1984-86)

BODY
CJ=CJ-5, CJ-6, CJ-7, CJ-8, Scrambler(1981-86)
MJ=Comanche Pickup(1986)

STYLES
SJ=Wagoneer(1981-83), Grand Wagoneer(1984-86), Cherokee(1981-83), J-10, J-20(1981-86)
XJ=Wagoneer(1984-86), Cherokee(1984-86)

AR = Use as Required - = Non Illustrated Part P.A.R. = Paint as Required

CONTROLS, TRANSFER CASE SHIFT 1984-86 XJ, MJ WITH N.P.G. 228 OR 229 WITHOUT DISCONNECT FRONT AXLE
Figure 21M-4600

81J21 4600

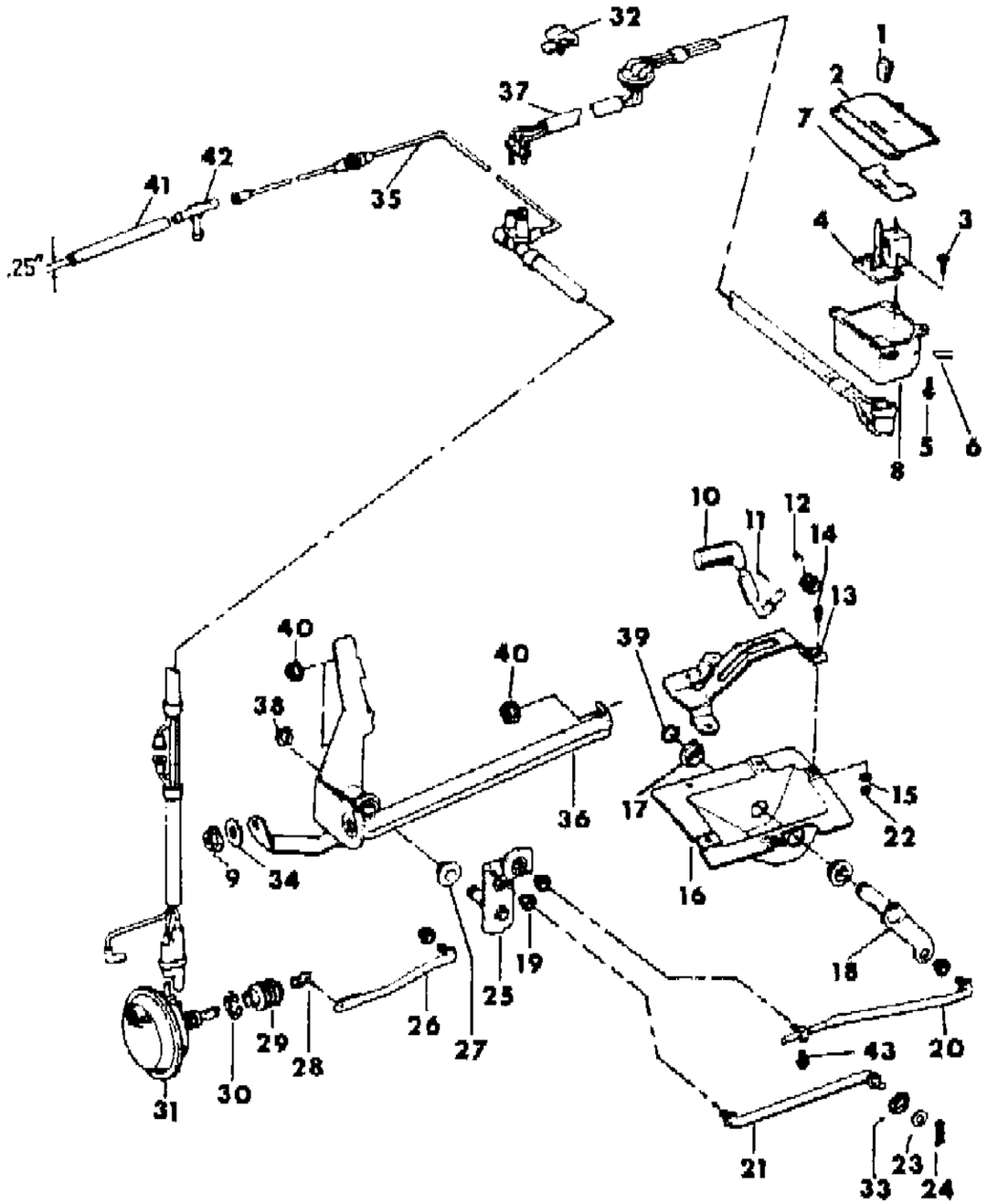

ITEM	PART NUMBER	QTY	BODY	MODEL	DESCRIPTION
	5300 2118				With Diesel Engine
37	5300 0732	1			HARNESS, Vacuum ***
38	3420 1850	1			RING, Retaining
39	1150 5389	1			RING, Retaining
40	J400 6681	1			NUT
41	8330 0080	1			HOSE, Vacuum (Bulk)
42	J323 2982	1			TEE
43	J400 6036	1			BOLT

MODEL CODES

16=Cherokee 2 Dr.(1981-83)
17=Cherokee 2 Dr.(1981-83)
73=Cherokee 2WD-2 Dr.(1984-86)
74=Cherokee 2WD-4 Dr.(1984-86)
18=Cherokee 4 Dr.(1981-83)
77=Cherokee 4WD-2 Dr.(1984-86)
78=Cherokee 4WD-4 Dr.(1984-86)
85=CJ-5 (1981-83)
86=CJ-6(1981)
87=CJ-7(1981-86)
88=CJ-8, Scrambler(1981-86)
64=Comanche 2WD-6 Ft. Box(1986)
66=Comanche 2WD-7 Ft. Box(1986)
63=Comanche 4WD-6 Ft. Box(1986)
65=Comanche 4WD-7 Ft. Box(1986)
15=Grand Wagoneer 4 Dr.(1984-86)
25=J-10 Truck 7 Ft. Box(1981-84)
26=J10 Truck 8 Ft. Box(1981-86)
27=J-20 Truck 8 Ft. Box(1981-86)
15=Wagoneer 4 Dr.(1981-83)
75=Wagoneer 4WD-4 Dr.(1984-86)

BODY
CJ=CJ-5, CJ-6, CJ-7, CJ-8, Scrambler(1981-86)
MJ=Comanche Pickup(1986)

STYLES
SJ=Wagoneer(1981-83), Grand Wagoneer(1984-86), Cherokee(1981-83), J-10, J-20(1981-86)
XJ=Wagoneer(1984-86), Cherokee(1984-86)

AR = Use as Required - = Non Illustrated Part P.A.R. = Paint as Required

« RETURN TO GROUP INDEX

CONTROLS, TRANSFER CASE SHIFT SJ WITH N.P.G. 208 MANUAL TRANSMISSION
Figure 21M-4700

81J21 4700

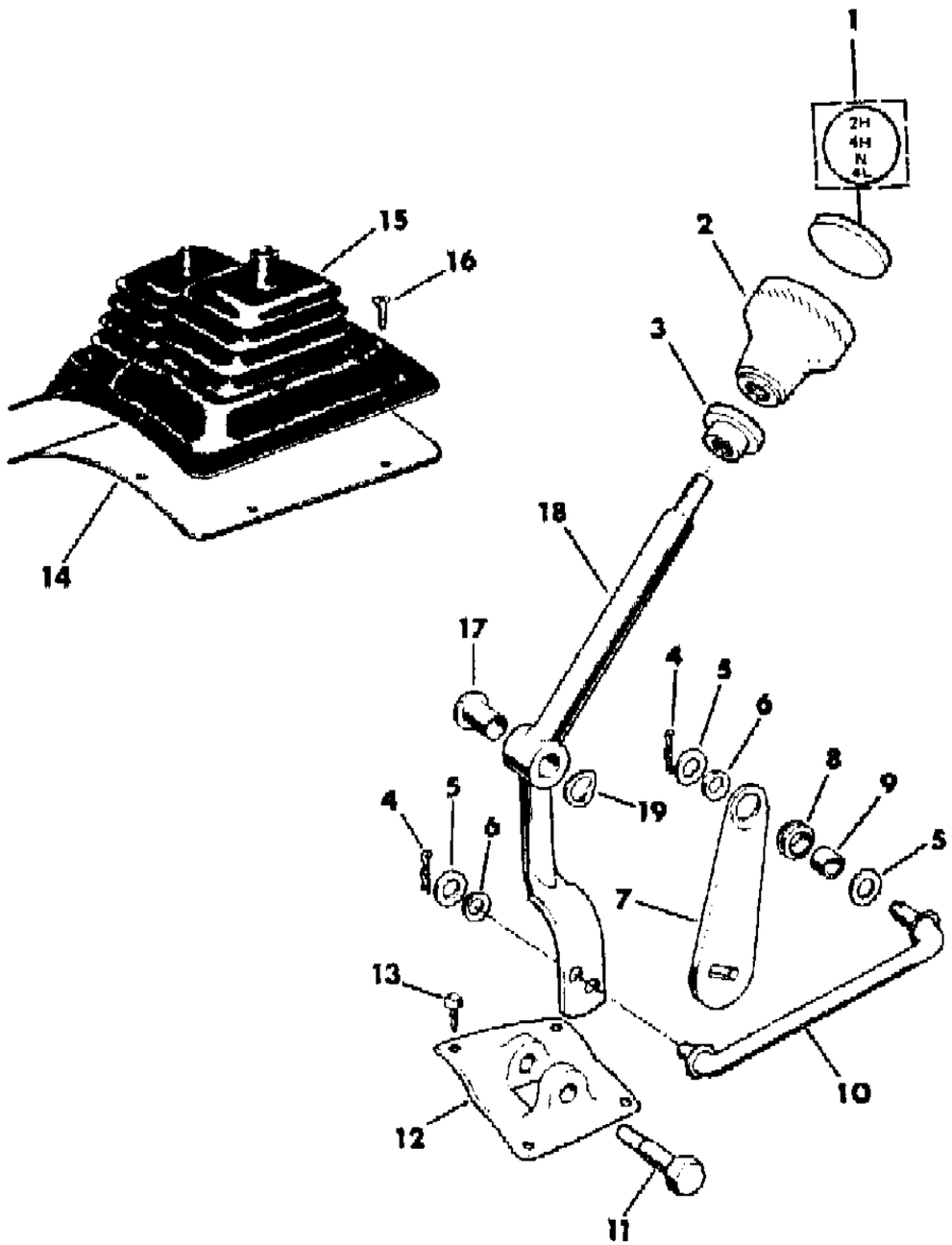

ITEM	PART NUMBER	QTY	BODY	MODEL	DESCRIPTION
1	J324 1431	1			INSERT
2					KNOB, Shift
	J536 1063	1			1981
	J324 1062	1			1982-86
3	J400 6495	1			NUT
4	J400 4295	2			PIN, Hitch
5	J094 3961	3			WASHER, Flat
6	J081 5535	2			WASHER, Wave
7	J536 0185	1			LEVER
8	J813 7697	1			GROMMET
9	J318 7696	1			BUSHING
10					ROD, Shift
	J536 0906	1		15,16,1	
	J536 0906	1		25,26	With Four Speed Transmission
	J536 3144	1		25,26	With Five Speed Transmission
	J536 0906	1		27	
11	J400 6490	1			BOLT
12	J536 1066	1			BRACKET
13	J943 1948	1			SCREW
14	J575 2447	1			SEAL
15					BOOT
					WITH FOUR SPEED TRANSMISSION
	J575 2011	1			Black
	J576 3705	1			1983: Blue
	J576 3706	1			1983: Brown
	J576 3707	1			1983-84: Nutmeg
	J576 4435	1			1984: Dark Almond
	J576 6429	1			1985-86: Honey
					WITH FIVE SPEED TRANSMISSION
	J576 1128	1			1982-83: Black
	J576 3712	1			1983: Blue
	J576 3713	1			1983: Brown
	J576 3714	1			1983: Nutmeg
16	J400 7056	8			SCREW
17	J400 6489	1			BUSHING
18	J536 0197	1			LEVER
19	J400 6483	1			WASHER, Wave

MODEL CODES
16=Cherokee 2 Dr.(1981-83)
17=Cherokee 2 Dr.(1981-83)
73=Cherokee 2WD-2 Dr.(1984-86)
74=Cherokee 2WD-4 Dr.(1984-86)
18=Cherokee 4 Dr.(1981-83)
77=Cherokee 4WD-2 Dr.(1984-86)
78=Cherokee 4WD-4 Dr.(1984-86)
85=CJ-5 (1981-83)
86=CJ-6(1981)
87=CJ-7(1981-86)
88=CJ-8, Scrambler(1981-86)
64=Comanche 2WD-6 Ft. Box(1986)
66=Comanche 2WD-7 Ft. Box(1986)
63=Comanche 4WD-6 Ft. Box(1986)
65=Comanche 4WD-7 Ft. Box(1986)
15=Grand Wagoneer 4 Dr.(1984-86)
25=J-10 Truck 7 Ft. Box(1981-84)
26=J10 Truck 8 Ft. Box(1981-86)
27=J-20 Truck 8 Ft. Box(1981-86)
15=Wagoneer 4 Dr.(1981-83)
75=Wagoneer 4WD-4 Dr.(1984-86)

BODY
CJ=CJ-5, CJ-6, CJ-7, CJ-8, Scrambler(1981-86)
MJ=Comanche Pickup(1986)

STYLES
SJ=Wagoneer(1981-83), Grand Wagoneer(1984-86), Cherokee(1981-83), J-10, J-20(1981-86)
XJ=Wagoneer(1984-86), Cherokee(1984-86)

AR = Use as Required - = Non Illustrated Part P.A.R. = Paint as Required

« RETURN TO GROUP INDEX

CONTROLS, TRANSFER CASE SHIFT LEVER SJ WITH AUTOMATIC TRANSMISSION
Figure 21M-4800

81J21 4800

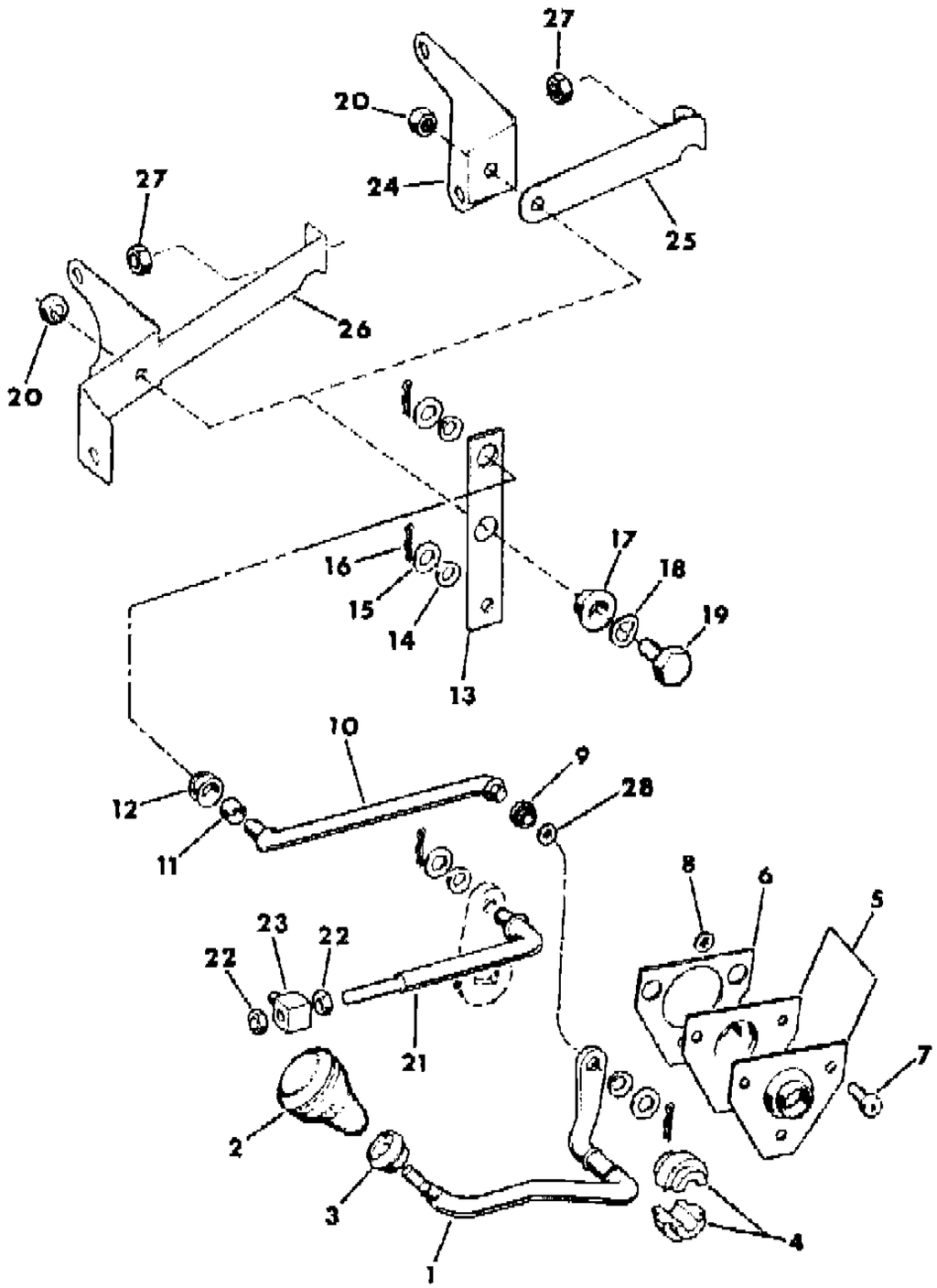

ITEM	PART NUMBER	QTY	BODY	MODEL	DESCRIPTION
1					LEVER, Transfer Case Shift
	J536 0102	1			1981-85
	8350 2727	1			1986
2					KNOB, Shift
	J536 1065	1			With Model 208
	J536 1064	1			With Model 219
	J536 3530	1			With Model 228 or 229
3	J400 6495	1			NUT
4	J400 6487	2			BUSHING
5	J536 0114	2			RETAINER
6	J536 0134	1			GASKET
7	J400 5765	1			SCREW
8	J400 5041	1			NUT
9	J323 8418	1			BUSHING
10					ROD, Shift
					Six Cylinder
	J536 0051	1			1981-85
	5300 4306	1			1986
					Eight Cylinder
	J536 0053	1			1981-85
	5300 4307	1			1986
11	J318 7696	1			BUSHING
12	J318 7697	1			GROMMET
13					LEVER
	J536 0084	1			With Model 208 or 219
	J536 3526	1			With Model 228 or 229
14	J081 5535	3			WASHER, Wave
15	J094 3961	3			WASHER, Plain
16	J400 4295	3			PIN, Hitch
17	J400 6488	1			BUSHING
18	J400 6483	1			WASHER, Wave
19	J400 6482	1			BOLT
20	J941 3534	1			NUT
21	J536 3528	1			ROD
22	J012 4824	2			NUT
23	J536 0930	1			SWIVEL
24	J536 0052	1			BRACKET
25	J536 0072	1			BRACKET
26	J536 3522	1			BRACKET

MODEL CODES

16=Cherokee 2 Dr.(1981-83)
17=Cherokee 2 Dr.(1981-83)
73=Cherokee 2WD-2 Dr.(1984-86)
74=Cherokee 2WD-4 Dr.(1984-86)
18=Cherokee 4 Dr.(1981-83)
77=Cherokee 4WD-2 Dr.(1984-86)
78=Cherokee 4WD-4 Dr.(1984-86)
85=CJ-5 (1981-83)
86=CJ-6(1981)
87=CJ-7(1981-86)
88=CJ-8, Scrambler(1981-86)
64=Comanche 2WD-6 Ft. Box(1986)
66=Comanche 2WD-7 Ft. Box(1986)
63=Comanche 4WD-6 Ft. Box(1986)
65=Comanche 4WD-7 Ft. Box(1986)
15=Grand Wagoneer 4 Dr.(1984-86)
25=J-10 Truck 7 Ft. Box(1981-84)
26=J10 Truck 8 Ft. Box(1981-86)
27=J-20 Truck 8 Ft. Box(1981-86)
15=Wagoneer 4 Dr.(1981-83)
75=Wagoneer 4WD-4 Dr.(1984-86)

BODY
CJ=CJ-5, CJ-6, CJ-7, CJ-8, Scrambler(1981-86)
MJ=Comanche Pickup(1986)

STYLES
SJ=Wagoneer(1981-83), Grand Wagoneer(1984-86), Cherokee(1981-83), J-10, J-20(1981-86)
XJ=Wagoneer(1984-86), Cherokee(1984-86)

AR = Use as Required - = Non Illustrated Part P.A.R. = Paint as Required

« RETURN TO GROUP INDEX »

CONTROLS, TRANSFER CASE SHIFT LEVER SJ WITH AUTOMATIC TRANSMISSION
Figure 21M-4800

81J21 4800

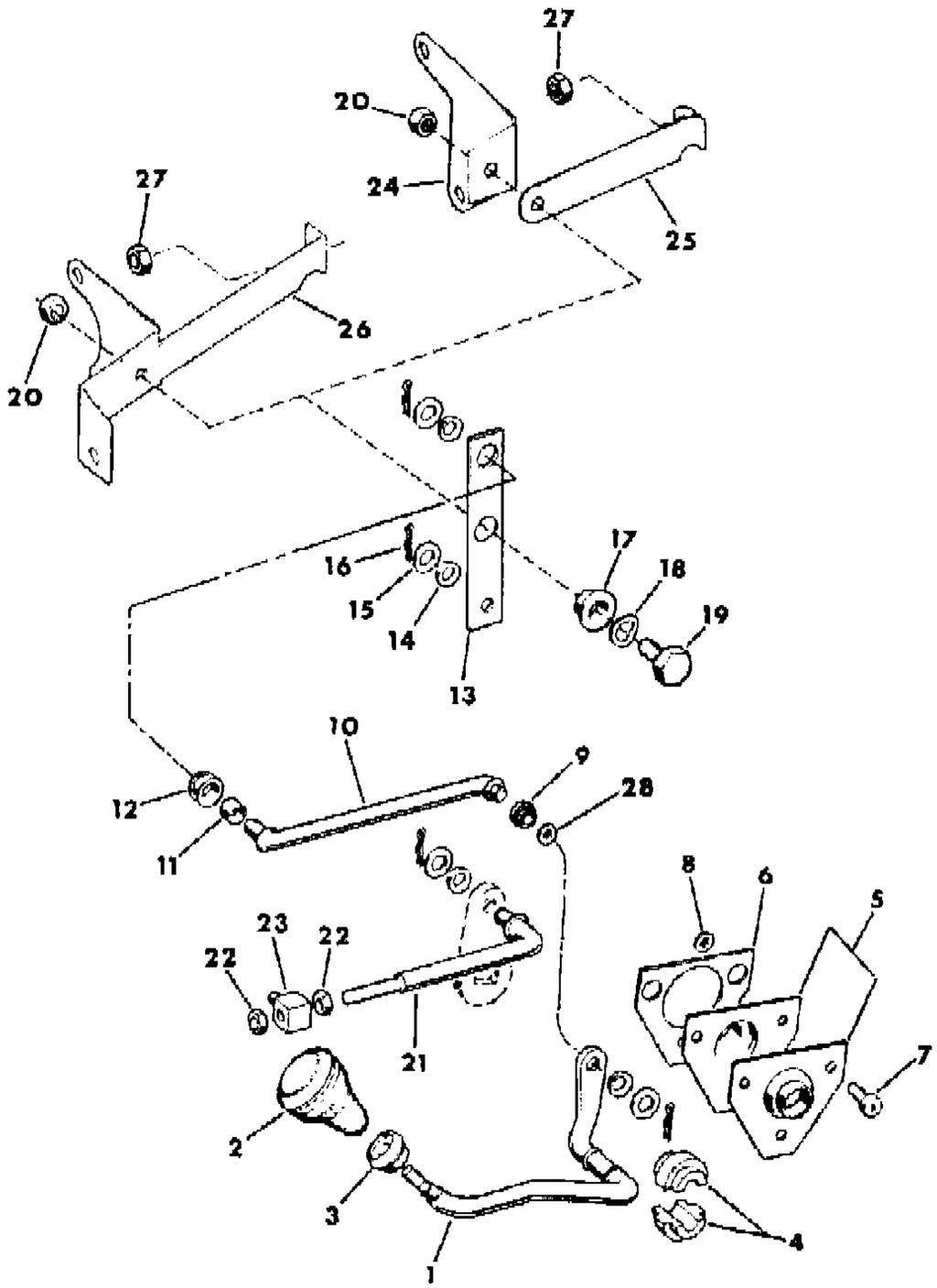

ITEM	PART NUMBER	QTY	BODY	MODEL	DESCRIPTION
27	J420 0081	1			NUT
28	J098 0363	1			NUT

MODEL CODES

16=Cherokee 2 Dr.(1981-83)	78=Cherokee 4WD-4 Dr.(1984-86)	64=Comanche 2WD-6 Ft. Box(1986)	25=J-10 Truck 7 Ft. Box(1981-84)
17=Cherokee 2 Dr.(1981-83)	85=CJ-5 (1981-83)	66=Comanche 2WD-7 Ft. Box(1986)	26=J10 Truck 8 Ft. Box(1981-86)
73=Cherokee 2WD-2 Dr.(1984-86)	86=CJ-6(1981)	63=Comanche 4WD-6 Ft. Box(1986)	27=J-20 Truck 8 Ft. Box(1981-86)
74=Cherokee 2WD-4 Dr.(1984-86)	87=CJ-7(1981-86)	65=Comanche 4WD-7 Ft. Box(1986)	15=Wagoneer 4 Dr.(1981-83)
18=Cherokee 4 Dr.(1981-83)	88=CJ-8, Scrambler(1981-86)	15=Grand Wagoneer 4 Dr.(1984-86)	75=Wagoneer 4WD-4 Dr.(1984-86)
77=Cherokee 4WD-2 Dr.(1984-86)			

BODY
CJ=CJ-5, CJ-6, CJ-7, CJ-8, Scrambler(1981-86)
MJ=Comanche Pickup(1986)

STYLES
SJ=Wagoneer(1981-83), Grand Wagoneer(1984-86), Cherokee(1981-83), J-10, J-20(1981-86)
XJ=Wagoneer(1984-86), Cherokee(1984-86)

AR = Use as Required - = Non Illustrated Part P.A.R. = Paint as Required

« RETURN TO GROUP INDEX

CONTROLS, TRANSFER CASE VACUUM SHIFT 1982-84 SJ WITH N.P.G. 229 AUTOMATIC TRANSMISSION
Figure 21M-4900

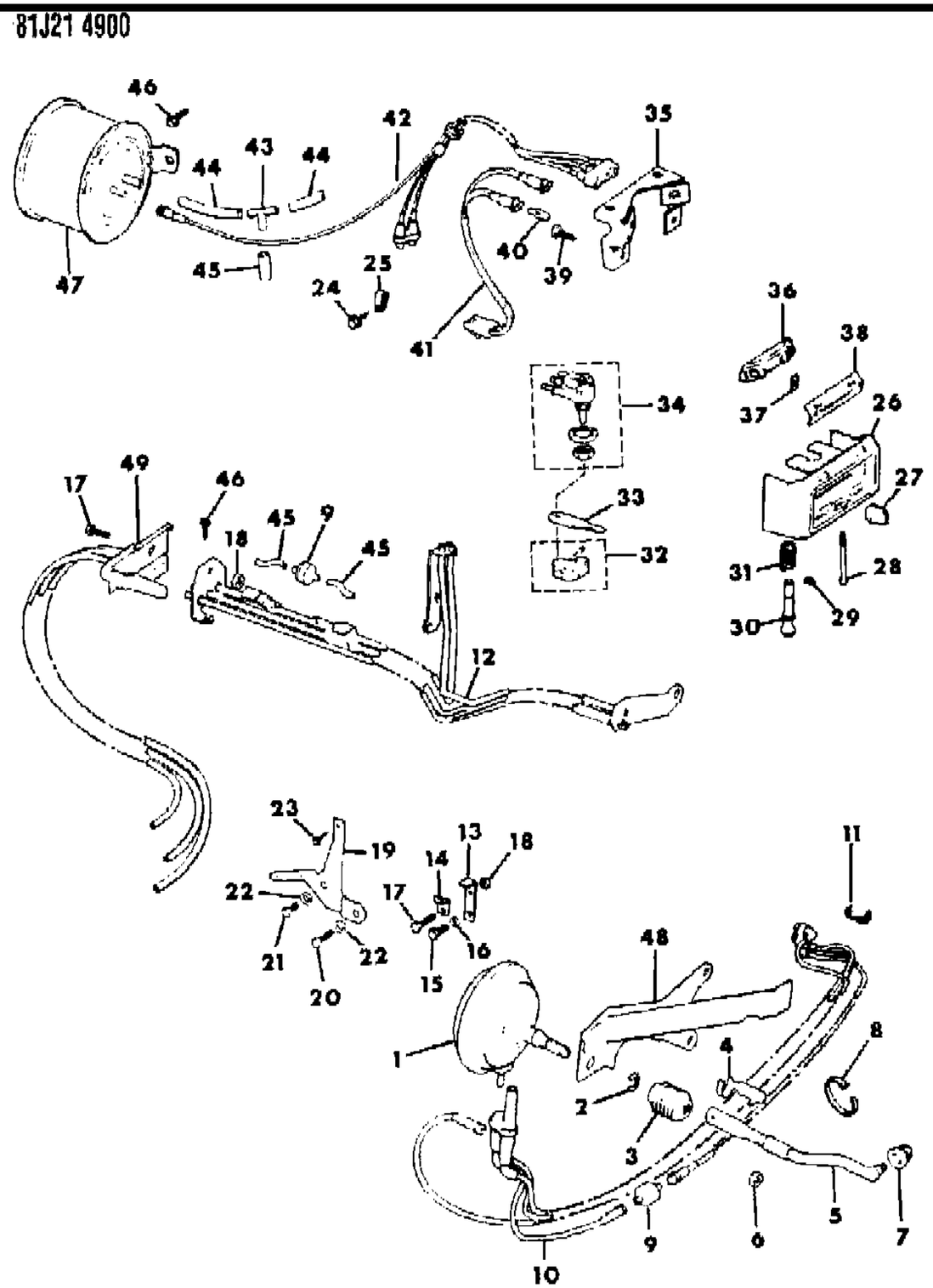

ITEM	PART NUMBER	QTY	BODY	MODEL	DESCRIPTION
1	J324 0125	1			MOTOR, Transfer Case Vacuum
2	J400 6924	1			CLIP
3	J324 0126	1			BOOT, Vacuum Shift
4	J324 1415	1			CLIP
5	J536 3985	1			ROD, Vacuum Motor
6	J012 4824	1			NUT
7	J323 8418	1			BUSHING
8	J322 3227	3			STRAP
9	J536 4511	2			VALVE, Vacuum
10	J536 4243	1			HARNESS, Vacuum ***
11	5300 1242	2			RETAINER
12					TUBE ASSEMBLY, Shift ***
	J536 3546	1			Six Cylinder
	J536 3547	1			Eight Cylinder
13	J536 4338	1			BRACKET
14	J536 4175	1			CLIP
15	J400 6110	1			BOLT
16	J012 0388	1			WASHER
17	S018 0017	1			BOLT
18	J027 1172	1			NUT
19	J536 3932	1			BRACKET, With Six Cylinder
20	S018 0124	1			BOLT, With Six Cylinder
21	J018 0120	1			BOLT, With Six Cylinder
22	J400 3803	2			WASHER, With Six Cylinder
23	J942 6241	1			SCREW
24	J400 5600	1			SCREW
25	S014 0580	1			CLIP
26					BEZEL, Transfer Case Switch
	J576 1728	1			P.A.R.
	5300 1616	1			EXPORT - P.A.R.
27					KNOB
	J324 1055	1			
	5300 1617	1			EXPORT
28					SCREW
	J400 7052	2			
	1150 2843	2			EXPORT
29	J400 6918	1			RING, Retaining
30					PIN
	J324 0213	1			

MODEL CODES

16=Cherokee 2 Dr.(1981-83)
17=Cherokee 2 Dr.(1981-83)
73=Cherokee 2WD-2 Dr.(1984-86)
74=Cherokee 2WD-4 Dr.(1984-86)
18=Cherokee 4 Dr.(1981-83)
77=Cherokee 4WD-2 Dr.(1984-86)
78=Cherokee 4WD-4 Dr.(1984-86)
85=CJ-5 (1981-83)
86=CJ-6(1981)
87=CJ-7(1981-86)
88=CJ-8, Scrambler(1981-86)
64=Comanche 2WD-6 Ft. Box(1986)
66=Comanche 2WD-7 Ft. Box(1986)
63=Comanche 4WD-6 Ft. Box(1986)
65=Comanche 4WD-7 Ft. Box(1986)
15=Grand Wagoneer 4 Dr.(1984-86)
25=J-10 Truck 7 Ft. Box(1981-84)
26=J10 Truck 8 Ft. Box(1981-86)
27=J-20 Truck 8 Ft. Box(1981-86)
15=Wagoneer 4 Dr.(1981-83)
75=Wagoneer 4WD-4 Dr.(1984-86)

BODY
CJ=CJ-5, CJ-6, CJ-7, CJ-8, Scrambler(1981-86)
MJ=Comanche Pickup(1986)

STYLES
SJ=Wagoneer(1981-83), Grand Wagoneer(1984-86), Cherokee(1981-83), J-10, J-20(1981-86)
XJ=Wagoneer(1984-86), Cherokee(1984-86)

AR = Use as Required - = Non Illustrated Part P.A.R. = Paint as Required

« RETURN TO GROUP INDEX »

CONTROLS, TRANSFER CASE VACUUM SHIFT 1982-84 SJ WITH N.P.G. 229 AUTOMATIC TRANSMISSION
Figure 21M-4900

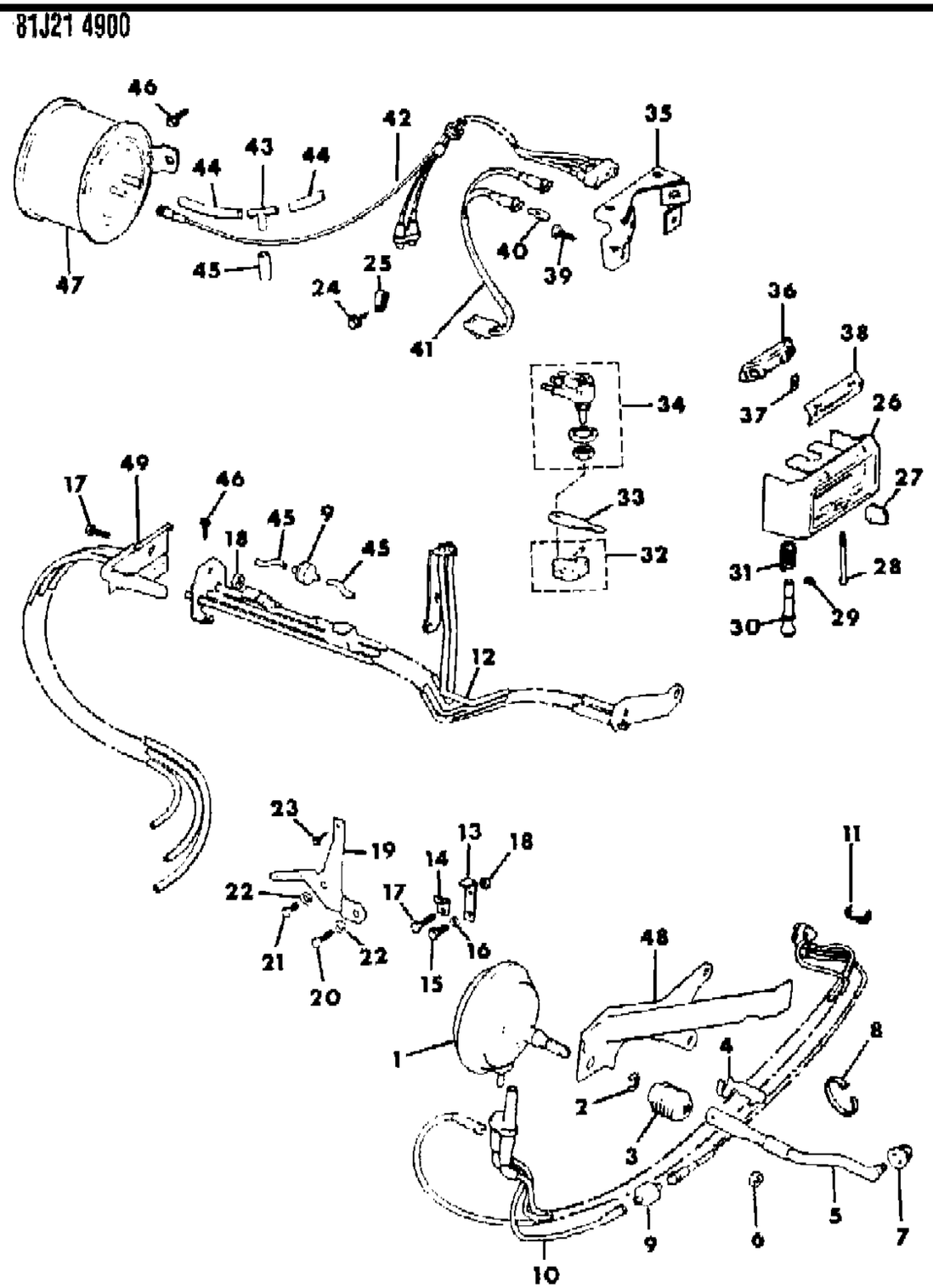

ITEM	PART NUMBER	QTY	BODY	MODEL	DESCRIPTION
	5300 0780	1			EXPORT
31	J324 0289	1			SPRING
32	J324 0244	1			BASE, Vacuum Switch
33	J324 0211	1			LEVER
34					SWITCH
	J324 0218	1			
	5300 0644	1			EXPORT
35					BRACKET
	J576 1732	1			
	5300 0642	1			EXPORT
36					SHIELD
	J576 1999	1			
	5300 0726	1			EXPORT
37	J400 7069	2			NUT
38	J576 1923	1			LENS
39					SCREW
	J400 5932	2			
	3420 1298	2			EXPORT
40	J320 9541	2			BULB
41	J576 1733	1			WIRE
42					HARNESS, Vacuum ***
	J536 4138	1			Six Cylinder
	J536 4137	1			Eight Cylinder
43	J097 5940	1			TEE
44	8330 0080	1			HOSE, Vacuum (Bulk)
45	J812 5995	1			HOSE, Vacuum (Bulk)
46	J942 6241	2			SCREW
47	J323 2991	1			TANK, Vacuum
48	J536 3522	1			BRACKET, Motor
49	J536 4144	1			HARNESS, Vacuum ***

MODEL CODES
16=Cherokee 2 Dr.(1981-83)
17=Cherokee 2 Dr.(1981-83)
73=Cherokee 2WD-2 Dr.(1984-86)
74=Cherokee 2WD-4 Dr.(1984-86)
18=Cherokee 4 Dr.(1981-83)
77=Cherokee 4WD-2 Dr.(1984-86)
78=Cherokee 4WD-4 Dr.(1984-86)
85=CJ-5 (1981-83)
86=CJ-6(1981)
87=CJ-7(1981-86)
88=CJ-8, Scrambler(1981-86)
64=Comanche 2WD-6 Ft. Box(1986)
66=Comanche 2WD-7 Ft. Box(1986)
63=Comanche 4WD-6 Ft. Box(1986)
65=Comanche 4WD-7 Ft. Box(1986)
15=Grand Wagoneer 4 Dr.(1984-86)
25=J-10 Truck 7 Ft. Box(1981-84)
26=J10 Truck 8 Ft. Box(1981-86)
27=J-20 Truck 8 Ft. Box(1981-86)
15=Wagoneer 4 Dr.(1981-83)
75=Wagoneer 4WD-4 Dr.(1984-86)

BODY
CJ=CJ-5, CJ-6, CJ-7, CJ-8, Scrambler(1981-86)
MJ=Comanche Pickup(1986)

STYLES
SJ=Wagoneer(1981-83), Grand Wagoneer(1984-86), Cherokee(1981-83), J-10, J-20(1981-86)
XJ=Wagoneer(1984-86), Cherokee(1984-86)

AR = Use as Required - = Non Illustrated Part P.A.R. = Paint as Required

« RETURN TO GROUP INDEX

CONTROLS, TRANSFER CASE VACUUM SHIFT 1985-86 SJ WITH N.P.G. 229 AUTOMATIC TRANSMISSION
Figure 21M-5000

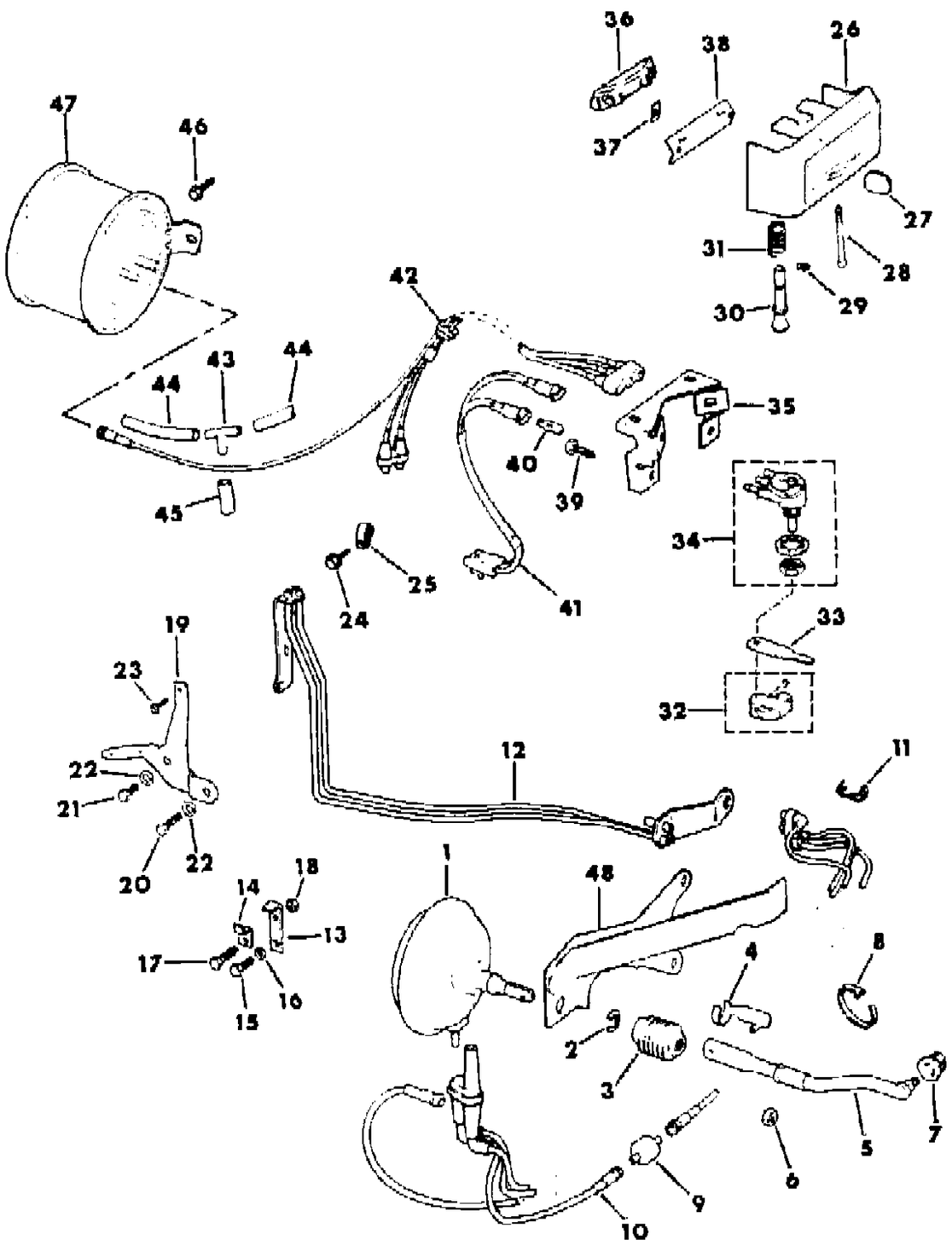

ITEM	PART NUMBER	QTY	BODY	MODEL	DESCRIPTION
1	5300 4596	1			MOTOR, Transfer Case Vacuum
2	J400 6924	1			CLIP
3	J324 0126	1			BOOT
4	J324 1415	1			CLIP
5	J536 3985	1			ROD
6	J012 4824	1			NUT
7	J323 8418	1			BUSHING
8	J322 3227	3			STRAP
9	J536 4511	1			VALVE, Vacuum
10	J536 5166	1			HARNESS, Vacuum ***
11	J098 7269	1			RETAINER
12					TUBE ASSEMBLY, Shift ***
	J536 5164	1			Six Cylinder
	J536 5165	1			Eight Cylinder
13	J536 4338	1			BRACKET
14	J536 4175	1			CLIP
15	J400 6110	1			BOLT
16	J012 0388	1			WASHER
17	S018 0017	1			BOLT
18	J027 1172	1			NUT
19	J536 3932	1			BRACKET, With Six Cylinder
20	S018 0124	1			BOLT, With Six Cylinder
21	J018 0120	1			BOLT, With Six Cylinder
22	J400 3803	2			WASHER
23	J942 6241	1			SCREW
24	J400 5600	1			SCREW
25	S014 0580	1			CLIP
26					BEZEL
	J576 6615	1			
	5300 1995	1			EXPORT
27					KNOB
	J324 1055	1			
	5300 1617	1			EXPORT
28					SCREW
	J400 7052	2			
	1150 2843	2			EXPORT
29	J400 6918	1			RING, Retaining
30					PIN
	J576 6610	1			

MODEL CODES

16=Cherokee 2 Dr.(1981-83)	78=Cherokee 4WD-4 Dr.(1984-86)	64=Comanche 2WD-6 Ft. Box(1986)	25=J-10 Truck 7 Ft. Box(1981-84)
17=Cherokee 2 Dr.(1981-83)	85=CJ-5 (1981-83)	66=Comanche 2WD-7 Ft. Box(1986)	26=J10 Truck 8 Ft. Box(1981-86)
73=Cherokee 2WD-2 Dr.(1984-86)	86=CJ-6(1981)	63=Comanche 4WD-6 Ft. Box(1986)	27=J-20 Truck 8 Ft. Box(1981-86)
74=Cherokee 2WD-4 Dr.(1984-86)	87=CJ-7(1981-86)	65=Comanche 4WD-7 Ft. Box(1986)	15=Wagoneer 4 Dr.(1981-83)
18=Cherokee 4 Dr.(1981-83)	88=CJ-8, Scrambler(1981-86)	15=Grand Wagoneer 4 Dr.(1984-86)	75=Wagoneer 4WD-4 Dr.(1984-86)
77=Cherokee 4WD-2 Dr.(1984-86)			

BODY
CJ=CJ-5, CJ-6, CJ-7, CJ-8, Scrambler(1981-86)
MJ=Comanche Pickup(1986)

STYLES
SJ=Wagoneer(1981-83), Grand Wagoneer(1984-86), Cherokee(1981-83), J-10, J-20(1981-86)
XJ=Wagoneer(1984-86), Cherokee(1984-86)

AR = Use as Required - = Non Illustrated Part P.A.R. = Paint as Required

« RETURN TO GROUP INDEX »

CONTROLS, TRANSFER CASE VACUUM SHIFT 1985-86 SJ WITH N.P.G. 229 AUTOMATIC TRANSMISSION
Figure 21M-5000

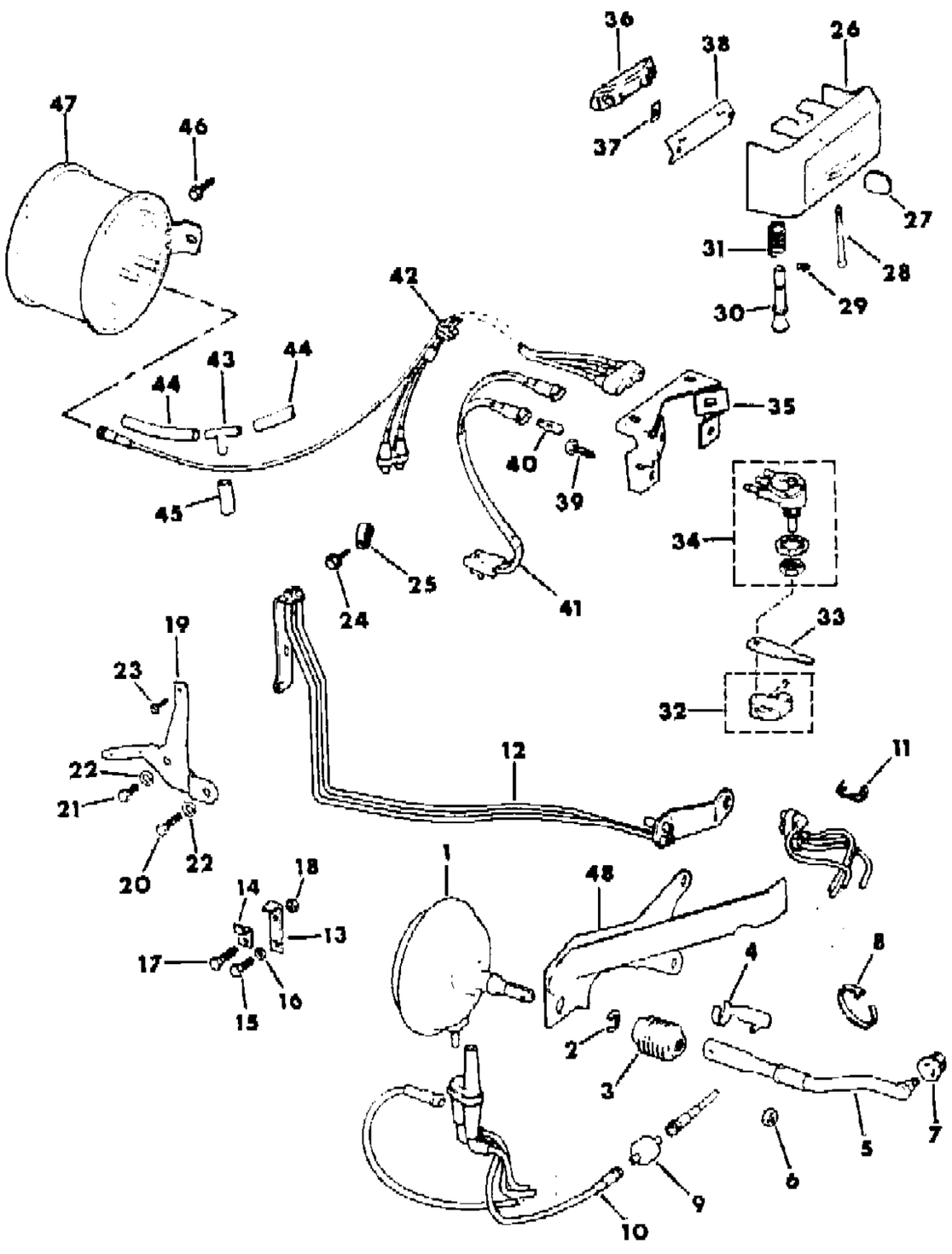

ITEM	PART NUMBER	QTY	BODY	MODEL	DESCRIPTION
	5300 0780	1			EXPORT
31	J324 0289	1			SPRING
32	J576 6612	1			BASE, Vacuum Switch
33	J324 0211	1			LEVER
34					SWITCH
	J324 0218	1			
	5300 2000	1			EXPORT
35					BRACKET
	J576 1732	1			
	5300 0642	1			EXPORT
36					SHIELD
	J576 1999	1			
	5300 0726	1			EXPORT
37	J400 7069	2			NUT
38	J576 1923	1			LENS
39					SCREW
	J400 5932	1			
	3420 1298	2			EXPORT
40	J320 9541	2			BULB
41	J576 1733	1			WIRE
42					HARNESS, Vacuum ***
	J536 4138	1			Six Cylinder
	J536 4137	1			Eight Cylinder
43	J323 9827	1			TEE
44	8330 0080	1			HOSE, Vacuum (Bulk)
45	J812 5812	1			HOSE, Vacuum (Bulk)
46	J942 6241	2			SCREW
47	J323 2991	1			TANK, Vacuum
48	J536 3522	1			BRACKET, Motor

MODEL CODES

16=Cherokee 2 Dr.(1981-83)
17=Cherokee 2 Dr.(1981-83)
73=Cherokee 2WD-2 Dr.(1984-86)
74=Cherokee 2WD-4 Dr.(1984-86)
18=Cherokee 4 Dr.(1981-83)
77=Cherokee 4WD-2 Dr.(1984-86)
78=Cherokee 4WD-4 Dr.(1984-86)
85=CJ-5 (1981-83)
86=CJ-6(1981)
87=CJ-7(1981-86)
88=CJ-8, Scrambler(1981-86)
64=Comanche 2WD-6 Ft. Box(1986)
66=Comanche 2WD-7 Ft. Box(1986)
63=Comanche 4WD-6 Ft. Box(1986)
65=Comanche 4WD-7 Ft. Box(1986)
15=Grand Wagoneer 4 Dr.(1984-86)
25=J-10 Truck 7 Ft. Box(1981-84)
26=J10 Truck 8 Ft. Box(1981-86)
27=J-20 Truck 8 Ft. Box(1981-86)
15=Wagoneer 4 Dr.(1981-83)
75=Wagoneer 4WD-4 Dr.(1984-86)

BODY
CJ=CJ-5, CJ-6, CJ-7, CJ-8, Scrambler(1981-86)
MJ=Comanche Pickup(1986)

STYLES
SJ=Wagoneer(1981-83), Grand Wagoneer(1984-86), Cherokee(1981-83), J-10, J-20(1981-86)
XJ=Wagoneer(1984-86), Cherokee(1984-86)

AR = Use as Required - = Non Illustrated Part P.A.R. = Paint as Required

« RETURN TO GROUP INDEX

CABLE, SPEEDOMETER AND PINION MANUAL TRANSMISSION CJ-5,6,7,8, SCRAMBLER
Figure 21M-5100

81J21 5100A

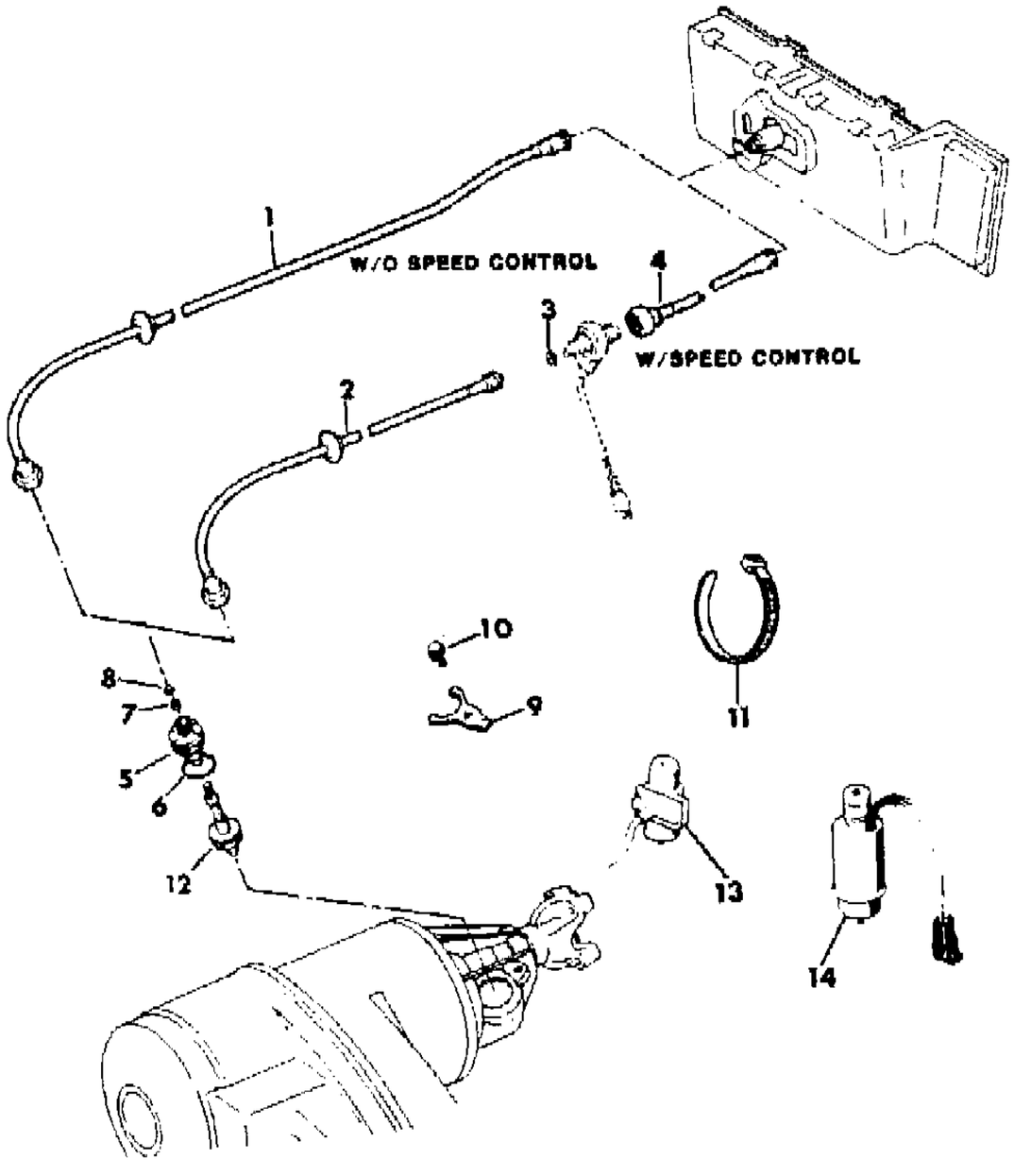

ITEM	PART NUMBER	QTY	BODY	MODEL	DESCRIPTION
1					CABLE, Speedometer
	J575 2395	1			1981-83: With GM Four Cylinder (49 States)
	J575 1959	1			Without GM Four Cylinder
2	J576 2340	1			CABLE, Speedometer Lower
3	J400 6555	1			O-RING
4					CABLE, Speedometer Upper
	J575 8491	1			1981: With Six Cylinder
	J575 1962	1			1981: With Eight Cylinder
	J575 8491	1			1982-86
5					ADAPTER, Speedometer
	J321 2707	1			Single Position
	J321 2893	1			Three Position
6	J321 2845	1			O-RING
7	J321 2847	1			SEAL
8	J321 2846	1			RETAINER
9	J321 2844	1			CLAMP
10	J027 3573	1			BOLT
11	J322 3227	AR			STRAP
12					GEAR, Speedometer Driven
	J321 2724	1			24 Teeth - White
	J321 2725	1			25 Teeth - Blue
	J321 2726	1			26 Teeth - Red
	J321 2727	1			27 Teeth - White
	J321 2728	1			28 Teeth - Blue
	J321 2729	1			29 Teeth - Black
	J321 2730	1			30 Teeth - Yellow
	J321 2731	1			31 Teeth - Green
	J321 2732	1			32 Teeth - Black
	J321 2733	1			33 Teeth - Yellow
	J321 2734	1			34 Teeth - Green
	J321 2735	1			35 Teeth - Orange
	J321 2736	1			36 Teeth - Red
	J321 2738	1			38 Teeth - Blue
	J323 0221	1			39 Teeth - Green
	J323 0222	1			40 Teeth - Orange
	5300 1488	1			41 Teeth - Red
	5300 1489	1			42 Teeth - White
	J323 8143	1			43 Teeth - Blue
	J323 8144	1			44 Teeth - Black

MODEL CODES

16=Cherokee 2 Dr.(1981-83)
17=Cherokee 2 Dr.(1981-83)
73=Cherokee 2WD-2 Dr.(1984-86)
74=Cherokee 2WD-4 Dr.(1984-86)
18=Cherokee 4 Dr.(1981-83)
77=Cherokee 4WD-2 Dr.(1984-86)
78=Cherokee 4WD-4 Dr.(1984-86)
85=CJ-5 (1981-83)
86=CJ-6(1981)
87=CJ-7(1981-86)
88=CJ-8, Scrambler(1981-86)
64=Comanche 2WD-6 Ft. Box(1986)
66=Comanche 2WD-7 Ft. Box(1986)
63=Comanche 4WD-6 Ft. Box(1986)
65=Comanche 4WD-7 Ft. Box(1986)
15=Grand Wagoneer 4 Dr.(1984-86)
25=J-10 Truck 7 Ft. Box(1981-84)
26=J10 Truck 8 Ft. Box(1981-86)
27=J-20 Truck 8 Ft. Box(1981-86)
15=Wagoneer 4 Dr.(1981-83)
75=Wagoneer 4WD-4 Dr.(1984-86)

BODY
CJ=CJ-5, CJ-6, CJ-7, CJ-8, Scrambler(1981-86)
MJ=Comanche Pickup(1986)

STYLES
SJ=Wagoneer(1981-83), Grand Wagoneer(1984-86), Cherokee(1981-83), J-10, J-20(1981-86)
XJ=Wagoneer(1984-86), Cherokee(1984-86)

AR = Use as Required - = Non Illustrated Part P.A.R. = Paint as Required

« RETURN TO GROUP INDEX »

CABLE, SPEEDOMETER AND PINION MANUAL TRANSMISSION CJ-5,6,7,8, SCRAMBLER
Figure 21M-5100

81J21 5100A

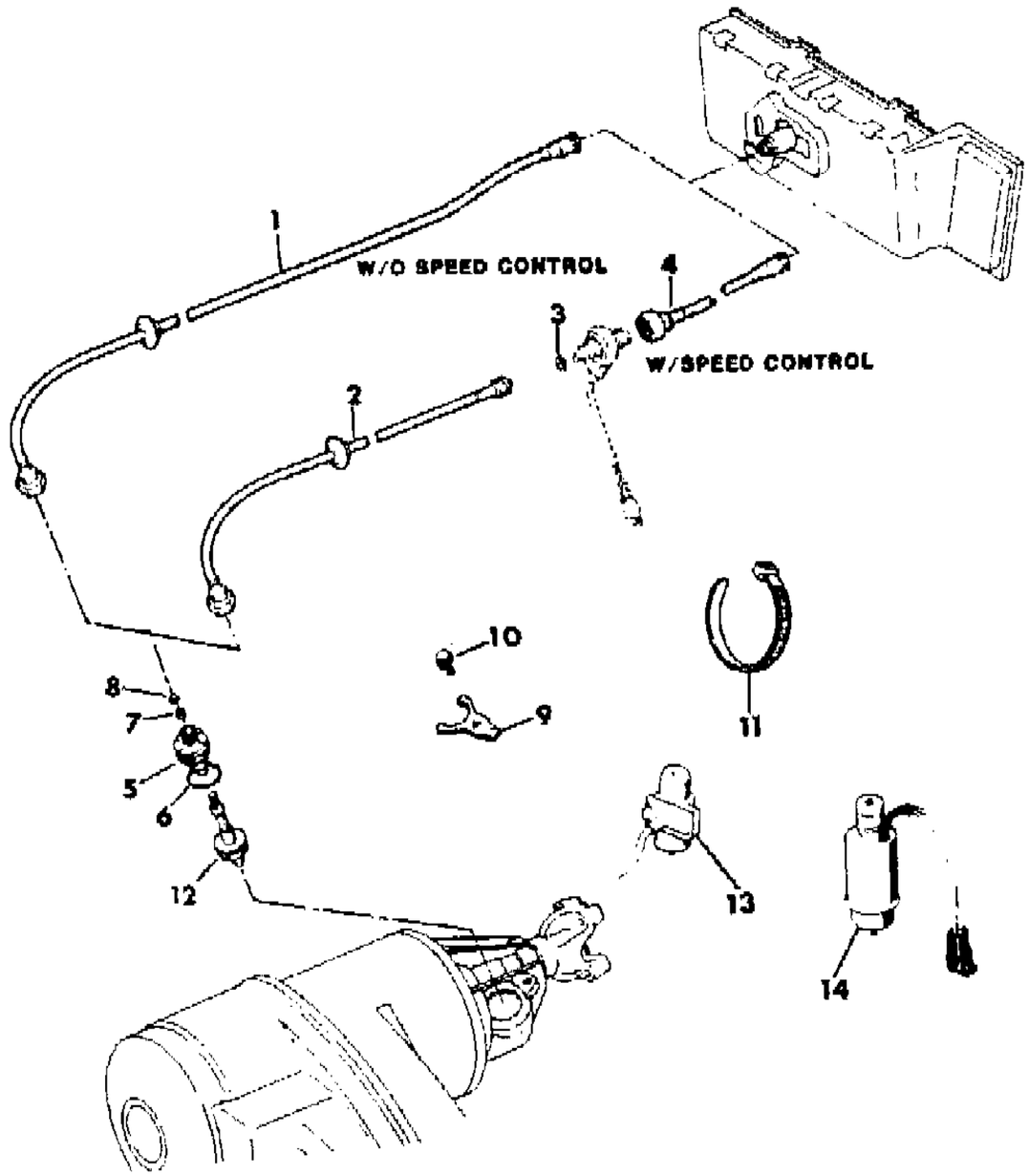

ITEM	PART NUMBER	QTY	BODY	MODEL	DESCRIPTION
	9200 0065	1			45 Teeth - Yellow
13	J324 2476	1			SENSOR, Speed, JAPAN
14	J323 5649	1			SWITCH, Emission, With Four Cylinder, California Only

MODEL CODES

16=Cherokee 2 Dr.(1981-83)	78=Cherokee 4WD-4 Dr.(1984-86)	64=Comanche 2WD-6 Ft. Box(1986)	25=J-10 Truck 7 Ft. Box(1981-84)
17=Cherokee 2 Dr.(1981-83)	85=CJ-5 (1981-83)	66=Comanche 2WD-7 Ft. Box(1986)	26=J10 Truck 8 Ft. Box(1981-86)
73=Cherokee 2WD-2 Dr.(1984-86)	86=CJ-6(1981)	63=Comanche 4WD-6 Ft. Box(1986)	27=J-20 Truck 8 Ft. Box(1981-86)
74=Cherokee 2WD-4 Dr.(1984-86)	87=CJ-7(1981-86)	65=Comanche 4WD-7 Ft. Box(1986)	15=Wagoneer 4 Dr.(1981-83)
18=Cherokee 4 Dr.(1981-83)	88=CJ-8, Scrambler(1981-86)	15=Grand Wagoneer 4 Dr.(1984-86)	75=Wagoneer 4WD-4 Dr.(1984-86)
77=Cherokee 4WD-2 Dr.(1984-86)			

BODY
CJ=CJ-5, CJ-6, CJ-7, CJ-8, Scrambler(1981-86)
MJ=Comanche Pickup(1986)

STYLES
SJ=Wagoneer(1981-83), Grand Wagoneer(1984-86), Cherokee(1981-83), J-10, J-20(1981-86)
XJ=Wagoneer(1984-86), Cherokee(1984-86)

AR = Use as Required - = Non Illustrated Part P.A.R. = Paint as Required

CABLE, SPEEDOMETER AND PINION XJ CHEROKEE, XJ WAGONEER COMANCHE
Figure 21M-5200

81J21 5200

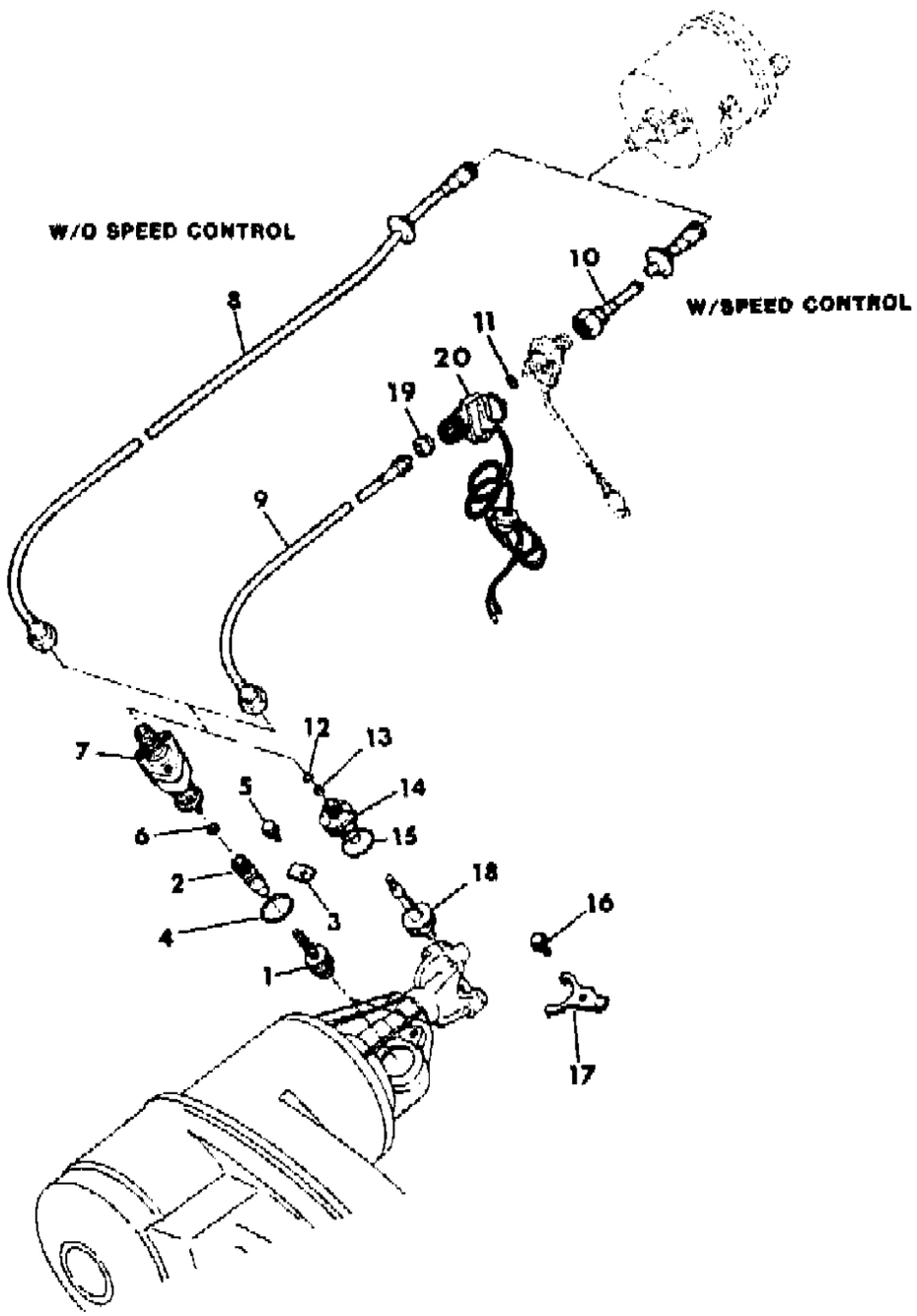

ITEM	PART NUMBER	QTY	BODY	MODEL	DESCRIPTION
1					GEAR, Speedometer Driven
	5300 1491	1			18 Teeth - Yellow
	5300 1492	1			19 Teeth - Red
	5300 1493	1			20 Teeth - Blue
	5300 3401	1			21 Teeth - Green
	5300 3419	1			22 Teeth - Black
2	5300 1485	1			ADAPTER, Speedometer
3	5300 1484	1			RETAINER
4	3420 1877	1			O-RING
5	3420 1886	1			SCREW
6	8351 0031	1			SEAL
7	5300 1105	1			ADAPTER, Speedometer
8					CABLE, Speedometer
					Two Wheel Drive
	5300 1990	1			1984-85
	5300 1990	1		73	1986: Without Cruise Control
	5300 4953	1		74	1986: With Gas Engine, Without Cruise Control
					Four Wheel Drive
	5300 0058	1			1984-85
	5300 3900	1		73	1986: Without Cruise Control
	5300 4954	1		74	1986: With Gas Engine, Without Cruise Control
	5300 4952	1		74	With Diesel Engine, Without Cruise Control
9					CABLE, Speedometer Lower
					Two Wheel Drive
	5300 1989	1			1984-85
	5300 1989	1			1986: With Cruise Control
					Four Wheel Drive
	5300 0059	1			1984-85
	5300 3899	1			1986: With Cruise Control
10					CABLE, Speedometer Upper
	5300 0060	1			1984-85: With Model 207 Transfer Case
	5300 3073	1			1985: With Model 229 Transfer Case
	5300 3073	1		73	1986: With Cruise Control
	5300 4955	1		74	1986: With Cruise Control
11	J400 6555	1			O-RING
12	J321 2846	1			RETAINER
13	J321 2847	1			SEAL
14	J321 2893	1			ADAPTER, Speedometer
15	J321 2845	1			O-RING

MODEL CODES
16=Cherokee 2 Dr.(1981-83)
17=Cherokee 2 Dr.(1981-83)
73=Cherokee 2WD-2 Dr.(1984-86)
74=Cherokee 2WD-4 Dr.(1984-86)
18=Cherokee 4 Dr.(1981-83)
77=Cherokee 4WD-2 Dr.(1984-86)
78=Cherokee 4WD-4 Dr.(1984-86)
85=CJ-5 (1981-83)
86=CJ-6(1981)
87=CJ-7(1981-86)
88=CJ-8, Scrambler(1981-86)
64=Comanche 2WD-6 Ft. Box(1986)
66=Comanche 2WD-7 Ft. Box(1986)
63=Comanche 4WD-6 Ft. Box(1986)
65=Comanche 4WD-7 Ft. Box(1986)
15=Grand Wagoneer 4 Dr.(1984-86)
25=J-10 Truck 7 Ft. Box(1981-84)
26=J10 Truck 8 Ft. Box(1981-86)
27=J-20 Truck 8 Ft. Box(1981-86)
15=Wagoneer 4 Dr.(1981-83)
75=Wagoneer 4WD-4 Dr.(1984-86)

BODY
CJ=CJ-5, CJ-6, CJ-7, CJ-8, Scrambler(1981-86)
MJ=Comanche Pickup(1986)

STYLES
SJ=Wagoneer(1981-83), Grand Wagoneer(1984-86), Cherokee(1981-83), J-10, J-20(1981-86)
XJ=Wagoneer(1984-86), Cherokee(1984-86)

AR = Use as Required - = Non Illustrated Part P.A.R. = Paint as Required

CABLE, SPEEDOMETER AND PINION XJ CHEROKEE, XJ WAGONEER COMANCHE
Figure 21M-5200

81J21 5200

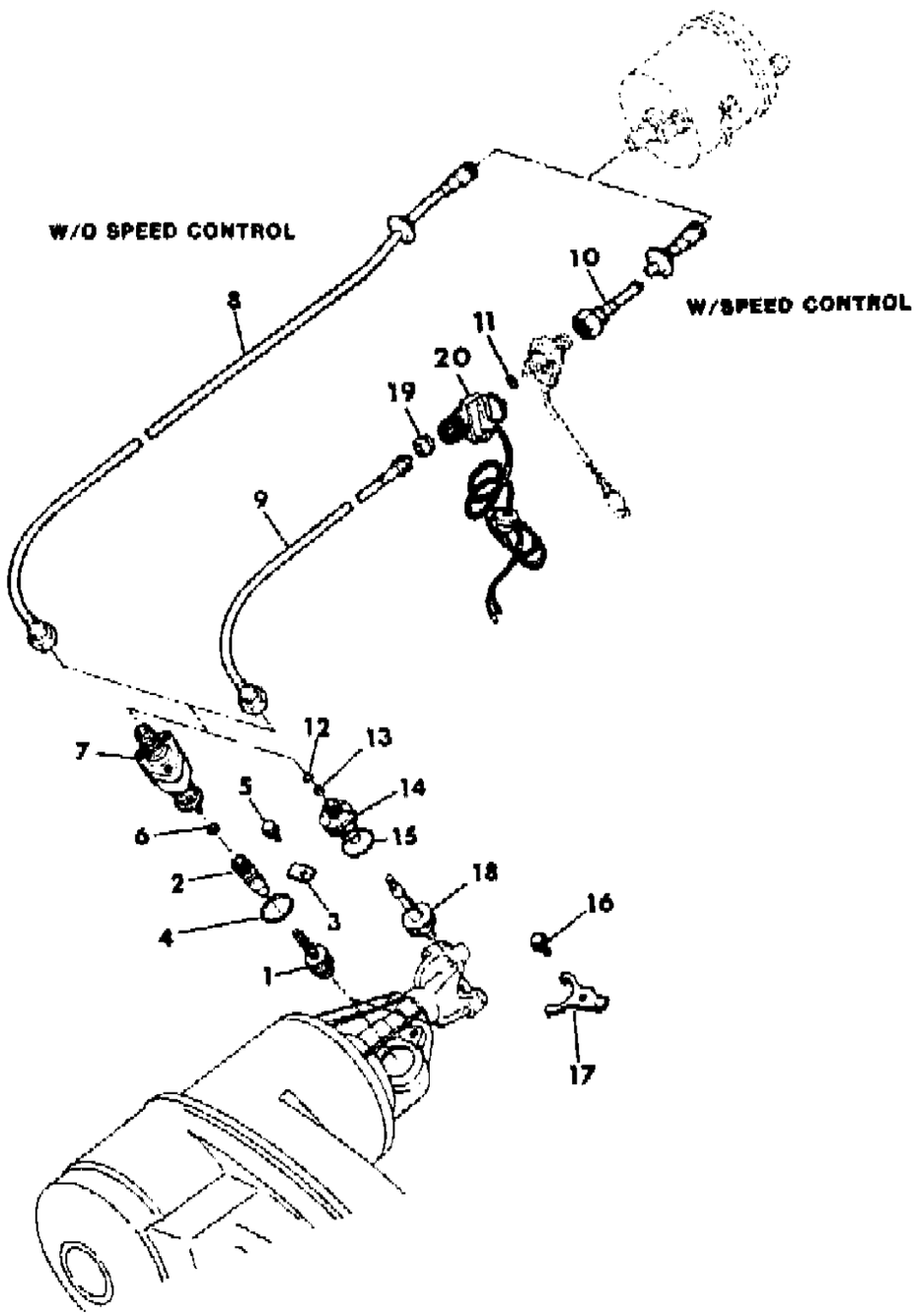

ITEM	PART NUMBER	QTY	BODY	MODEL	DESCRIPTION
16	J027 3573	1			SCREW
17	J321 2844	1			CLAMP
18					GEAR, Speedometer Driven
	J321 2729	1			29 Teeth - Black
	J321 2730	1			30 Teeth - Yellow
	J321 2731	1			31 Teeth - Green
	J321 2732	1			32 Teeth - Black
	J321 2733	1			33 Teeth - Yellow
	J321 2734	1			34 Teeth - Green
	J321 2735	1			35 Teeth - Orange
	J321 2736	1			36 Teeth - Red
	J321 2737	1			37 Teeth - White
	J321 2738	1			38 Teeth - Blue
	J323 0221	1			39 Teeth - Green
	J323 0222	1			40 Teeth - Orange
	5300 1488	1			41 Teeth - Red
	5300 1489	1			42 Teeth - White
	J323 8143	1			43 Teeth - Blue
	J323 8144	1			44 Teeth - Black
	9200 0065	1			45 Teeth - Yellow
19	J318 7257	1			RETAINER
20	J324 2476	1			SWITCH, Speed Warning, JAPAN

MODEL CODES

16=Cherokee 2 Dr.(1981-83)
17=Cherokee 2 Dr.(1981-83)
73=Cherokee 2WD-2 Dr.(1984-86)
74=Cherokee 2WD-4 Dr.(1984-86)
18=Cherokee 4 Dr.(1981-83)
77=Cherokee 4WD-2 Dr.(1984-86)
78=Cherokee 4WD-4 Dr.(1984-86)
85=CJ-5 (1981-83)
86=CJ-6(1981)
87=CJ-7(1981-86)
88=CJ-8, Scrambler(1981-86)
64=Comanche 2WD-6 Ft. Box(1986)
66=Comanche 2WD-7 Ft. Box(1986)
63=Comanche 4WD-6 Ft. Box(1986)
65=Comanche 4WD-7 Ft. Box(1986)
15=Grand Wagoneer 4 Dr.(1984-86)
25=J-10 Truck 7 Ft. Box(1981-84)
26=J10 Truck 8 Ft. Box(1981-86)
27=J-20 Truck 8 Ft. Box(1981-86)
15=Wagoneer 4 Dr.(1981-83)
75=Wagoneer 4WD-4 Dr.(1984-86)

BODY
CJ=CJ-5, CJ-6, CJ-7, CJ-8, Scrambler(1981-86)
MJ=Comanche Pickup(1986)

STYLES
SJ=Wagoneer(1981-83), Grand Wagoneer(1984-86), Cherokee(1981-83), J-10, J-20(1981-86)
XJ=Wagoneer(1984-86), Cherokee(1984-86)

AR = Use as Required - = Non Illustrated Part P.A.R. = Paint as Required

« RETURN TO GROUP INDEX

CABLE, SPEEDOMETER AND PINION ALL TRANSMISSIONS SJ CHEROKEE, SJ WAGONEER, J10, J20
Figure 21M-5300

81J21 5300

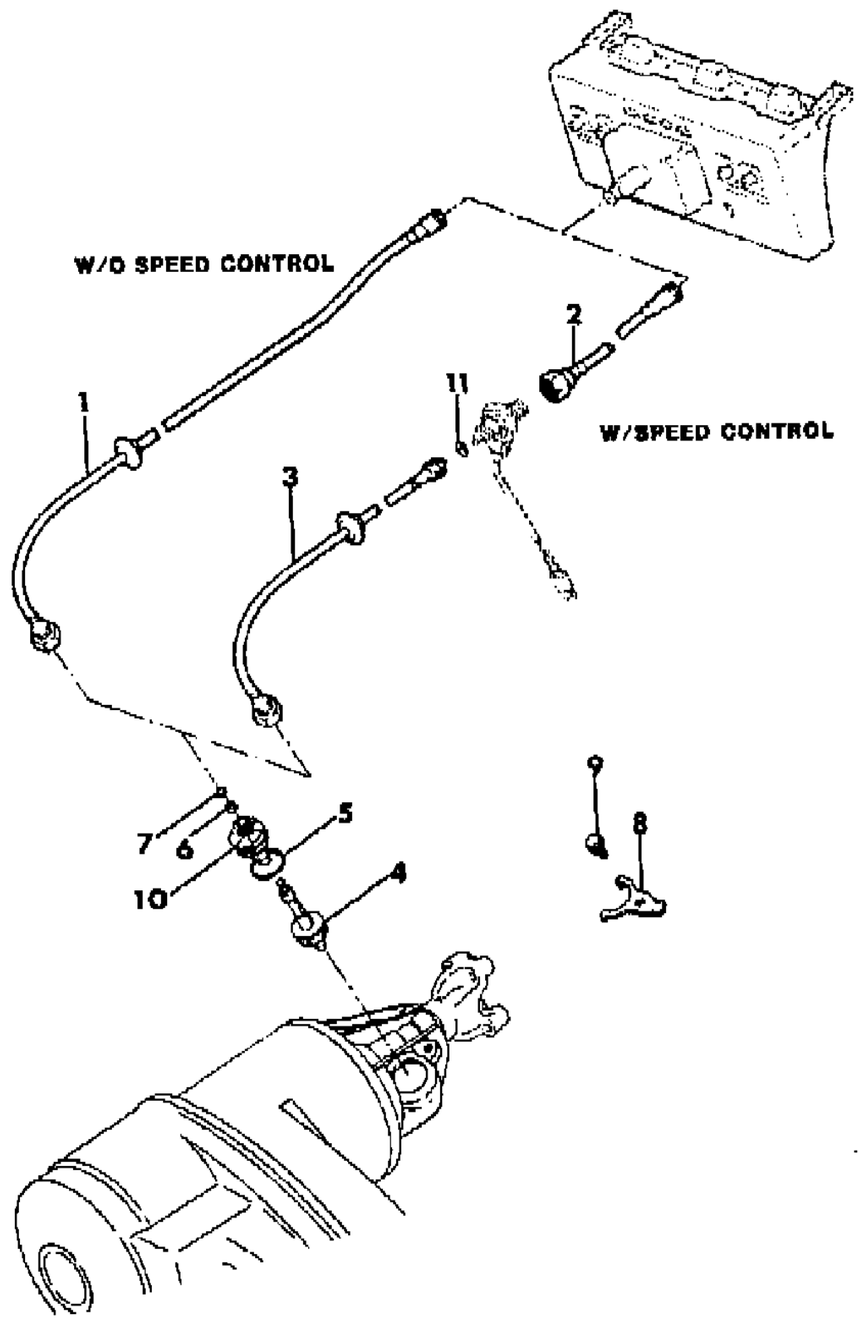

ITEM	PART NUMBER	QTY	BODY	MODEL	DESCRIPTION
1					CABLE, Speedometer, Without Cruise Control
					Six Cylinder, With Manual Transmission
	J575 2281	1			1981: With Four Speed Transmission
	J575 2281	1		15,25,2	1982-83: With Four Speed Transmission
	J575 2280	1		27	1982-83: With Four Speed Transmission
	J575 2282	1			1982-86: With Five Speed Transmission
					Six Cylinder, With Automatic Transmission
	J575 2280	1			1981: With 219 Transfer Case
	J575 2282	1			1981: With 208 Transfer Case
	J575 2280	1			1982: With Disconnect Axle, With 219 or 229 Transfer Case
	J575 2282	1			1982: With 208 Transfer Case
	J575 2280	1			1983-86: With 228 or 229 Transfer Case
	J575 2282	1			1983-86: With 208 Transfer Case
					Eight Cylinder, With Manual Transmission
	J575 2281	1			1981: With Four Speed Transmission
	J575 2282	1			1982-86: With Five Speed Transmission
					Eight Cylinder, With Automatic Transmission
	J575 2282	1			1981: With 219 Transfer Case
	J575 2281	1			1981: With 208 Transfer Case
	J575 2282	1			1982: With 229 Transfer Case
	J575 2281	1			With 208 Transfer Case
	J575 2281	1			1983-86: With 208 Transfer Case
	J575 2282	1			With 228 or 229 Transfer Case
2		1			CABLE, Speedometer Upper, With Cruise Control
	J575 8491	1			1981: With Six Cylinder
	J575 1962	1			1981: With Eight Cylinder
	J575 8491	1			1982-86
3					CABLE, Speedometer Lower
					Six Cylinder
	J575 8621	1			1981: With 219 Transfer Case
	J575 8490	1			1981: With 208 Transfer Case
	J575 8490	1			1982: With Automatic Transmission, With 208 Transfer Case
	J575 8621	1			1982: With Automatic Transmission, With 229 Transfer Case
	J575 8490	1			1982-86: With Five Speed Transmission
	J575 8621	1		27	1982-86: With Four Speed Transmission
	J536 3552	1		15,25,2	1982-86: With Four Speed Transmission
	J575 8490	1			1983-86: With Automatic Transmission, With 208 Transfer Case
	J575 8621	1			1983-86: With Automatic Transmission, With 228 or 229 Transfer Case

MODEL CODES

16=Cherokee 2 Dr.(1981-83)
17=Cherokee 2 Dr.(1981-83)
73=Cherokee 2WD-2 Dr.(1984-86)
74=Cherokee 2WD-4 Dr.(1984-86)
18=Cherokee 4 Dr.(1981-83)
77=Cherokee 4WD-2 Dr.(1984-86)
78=Cherokee 4WD-4 Dr.(1984-86)
85=CJ-5 (1981-83)
86=CJ-6(1981)
87=CJ-7(1981-86)
88=CJ-8, Scrambler(1981-86)
64=Comanche 2WD-6 Ft. Box(1986)
66=Comanche 2WD-7 Ft. Box(1986)
63=Comanche 4WD-6 Ft. Box(1986)
65=Comanche 4WD-7 Ft. Box(1986)
15=Grand Wagoneer 4 Dr.(1984-86)
25=J-10 Truck 7 Ft. Box(1981-84)
26=J10 Truck 8 Ft. Box(1981-86)
27=J-20 Truck 8 Ft. Box(1981-86)
15=Wagoneer 4 Dr.(1981-83)
75=Wagoneer 4WD-4 Dr.(1984-86)

BODY
CJ=CJ-5, CJ-6, CJ-7, CJ-8, Scrambler(1981-86)
MJ=Comanche Pickup(1986)

STYLES
SJ=Wagoneer(1981-83), Grand Wagoneer(1984-86), Cherokee(1981-83), J-10, J-20(1981-86)
XJ=Wagoneer(1984-86), Cherokee(1984-86)

AR = Use as Required - = Non Illustrated Part P.A.R. = Paint as Required

CABLE, SPEEDOMETER AND PINION ALL TRANSMISSIONS SJ CHEROKEE, SJ WAGONEER, J10, J20
Figure 21M-5300

81J21 5300

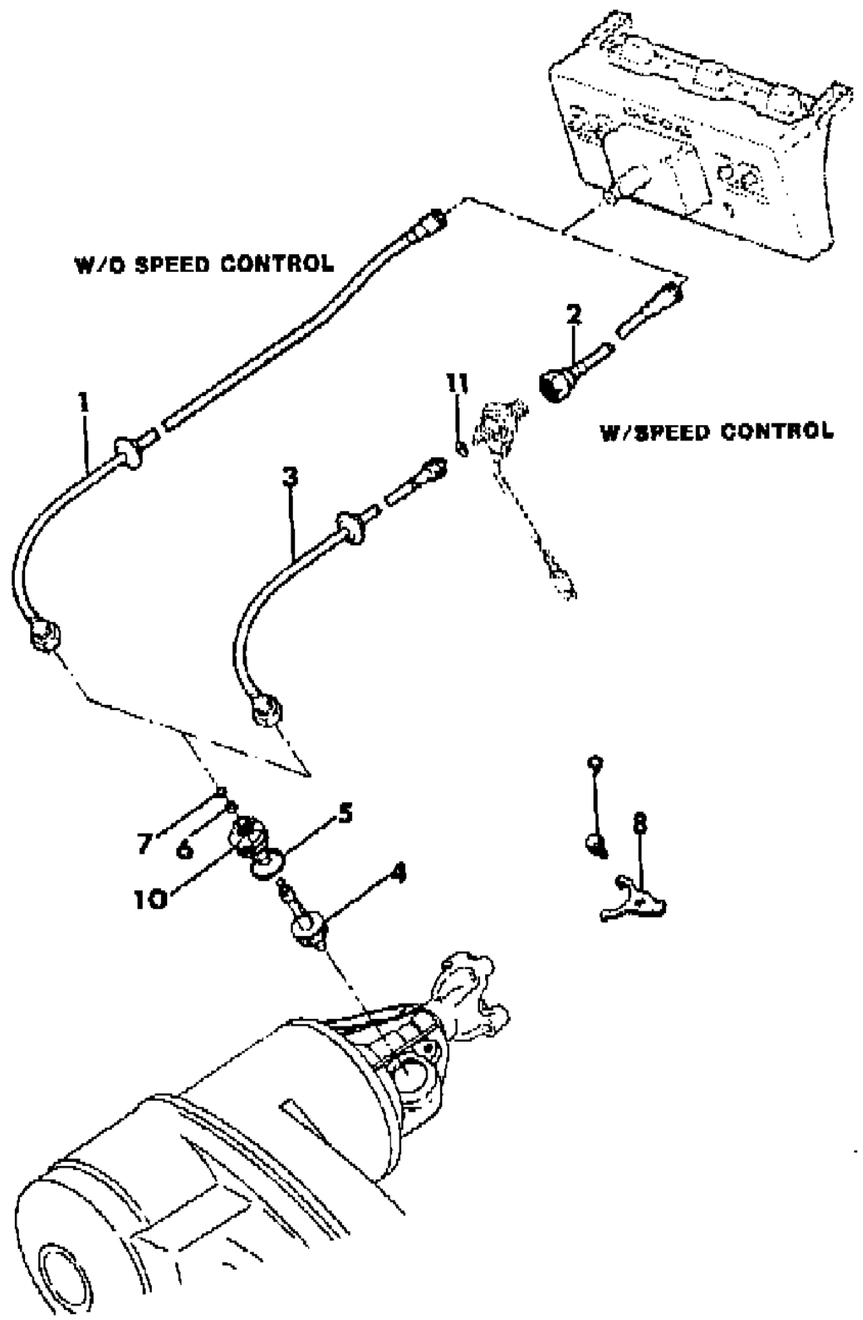

ITEM	PART NUMBER	QTY	BODY	MODEL	DESCRIPTION
					Eight Cylinder
	J575 2284	1			1981: With 208 Transfer Cae
	J575 2285	1			1981: With 219 Transfer Case
	J536 3552	1			1982: With Automatic Transmission, With 208 Transfer Case
	J575 8490	1			1982: With Automatic Transmission, With 229 Transfer Case
	J575 8490	1			1982-86: With Five Speed Transmission
	J575 8621	1		27	1982-86: With Four Speed Transmission
	J536 3552	1		15,25,2	1982-86: With Four Speed Transmission
	J536 3552	1			1983-86: With Automatic Transmission, With 208 Transfer Case
	J575 8490	1			1983-86: With Automatic Transmission, With 228 or 229 Transfer Case
4					GEAR, Speedometer Driven
	J321 2724	1			24 Teeth - White
	J321 2725	1			25 Teeth - Blue
	J321 2726	1			26 Teeth - Red
	J321 2727	1			27 Teeth - White
	J321 2728	1			28 Teeth - Blue
	J321 2729	1			29 Teeth - Black
	J321 2730	1			30 Teeth - Yellow
	J321 2731	1			31 Teeth - Green
	J321 2732	1			32 Teeth - Black
	J321 2733	1			33 Teeth - Yellow
	J321 2734	1			34 Teeth - Green
	J321 2735	1			35 Teeth - Orange
	J321 2736	1			36 Teeth - Red
	J321 2737	1			37 Teeth - White
	J321 2738	1			38 Teeth - Blue
	J323 0221	1			39 Teeth - Green
	5300 1488	1			41 Teeth - Red
	5300 1489	1			42 Teeth - White
	J323 8143	1			43 Teeth - Blue
	J323 8144	1			44 Teeth - Black
	9200 0065	1			45 Teeth - Yellow
5	J321 2845	1			O-RING
6	J321 2847	1			SEAL
7	J321 2846	1			RETAINER
8	J321 2844	1			CLAMP
9	J027 3573	1			SCREW
10					ADAPTER

MODEL CODES

16=Cherokee 2 Dr.(1981-83)
17=Cherokee 2 Dr.(1981-83)
73=Cherokee 2WD-2 Dr.(1984-86)
74=Cherokee 2WD-4 Dr.(1984-86)
18=Cherokee 4 Dr.(1981-83)
77=Cherokee 4WD-2 Dr.(1984-86)
78=Cherokee 4WD-4 Dr.(1984-86)
85=CJ-5 (1981-83)
86=CJ-6(1981)
87=CJ-7(1981-86)
88=CJ-8, Scrambler(1981-86)
64=Comanche 2WD-6 Ft. Box(1986)
66=Comanche 2WD-7 Ft. Box(1986)
63=Comanche 4WD-6 Ft. Box(1986)
65=Comanche 4WD-7 Ft. Box(1986)
15=Grand Wagoneer 4 Dr.(1984-86)
25=J-10 Truck 7 Ft. Box(1981-84)
26=J10 Truck 8 Ft. Box(1981-86)
27=J-20 Truck 8 Ft. Box(1981-86)
15=Wagoneer 4 Dr.(1981-83)
75=Wagoneer 4WD-4 Dr.(1984-86)

BODY
CJ=CJ-5, CJ-6, CJ-7, CJ-8, Scrambler(1981-86)
MJ=Comanche Pickup(1986)

STYLES
SJ=Wagoneer(1981-83), Grand Wagoneer(1984-86), Cherokee(1981-83), J-10, J-20(1981-86)
XJ=Wagoneer(1984-86), Cherokee(1984-86)

AR = Use as Required - = Non Illustrated Part P.A.R. = Paint as Required

CABLE, SPEEDOMETER AND PINION ALL TRANSMISSIONS SJ CHEROKEE, SJ WAGONEER, J10, J20
Figure 21M-5300

81J21 5300

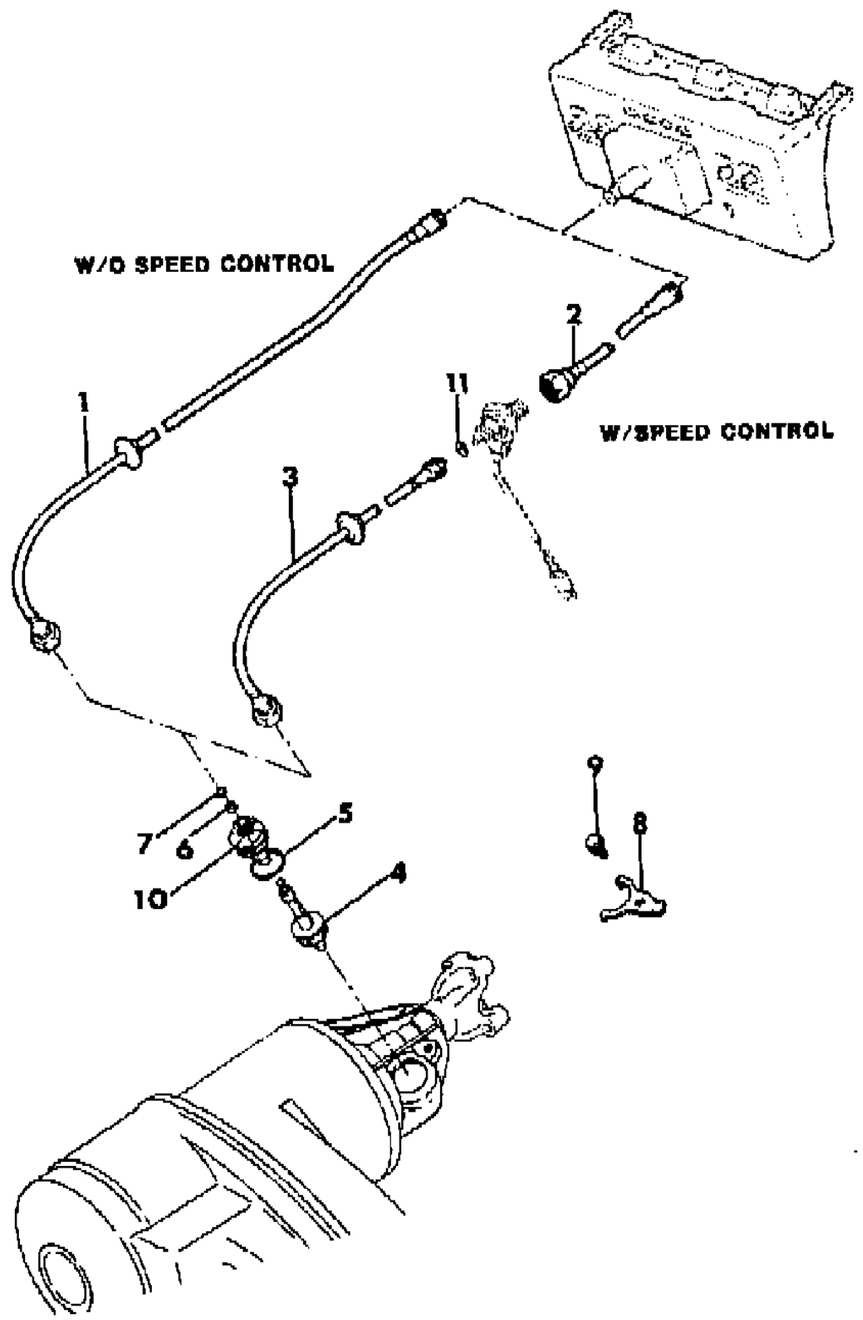

ITEM	PART NUMBER	QTY	BODY	MODEL	DESCRIPTION
	J321 2707	1			Single Position
	J321 2893	1			Three Position
11	J400 6555	1			O-RING

MODEL CODES

16=Cherokee 2 Dr.(1981-83)
17=Cherokee 2 Dr.(1981-83)
73=Cherokee 2WD-2 Dr.(1984-86)
74=Cherokee 2WD-4 Dr.(1984-86)
18=Cherokee 4 Dr.(1981-83)
77=Cherokee 4WD-2 Dr.(1984-86)
78=Cherokee 4WD-4 Dr.(1984-86)
85=CJ-5 (1981-83)
86=CJ-6(1981)
87=CJ-7(1981-86)
88=CJ-8, Scrambler(1981-86)
64=Comanche 2WD-6 Ft. Box(1986)
66=Comanche 2WD-7 Ft. Box(1986)
63=Comanche 4WD-6 Ft. Box(1986)
65=Comanche 4WD-7 Ft. Box(1986)
15=Grand Wagoneer 4 Dr.(1984-86)
25=J-10 Truck 7 Ft. Box(1981-84)
26=J10 Truck 8 Ft. Box(1981-86)
27=J-20 Truck 8 Ft. Box(1981-86)
15=Wagoneer 4 Dr.(1981-83)
75=Wagoneer 4WD-4 Dr.(1984-86)

BODY
CJ=CJ-5, CJ-6, CJ-7, CJ-8, Scrambler(1981-86)
MJ=Comanche Pickup(1986)

STYLES
SJ=Wagoneer(1981-83), Grand Wagoneer(1984-86), Cherokee(1981-83), J-10, J-20(1981-86)
XJ=Wagoneer(1984-86), Cherokee(1984-86)

AR = Use as Required - = Non Illustrated Part P.A.R. = Paint as Required

« RETURN TO GROUP INDEX

ILLUSTRATION NOT AVAILABLE AT TIME OF PUBLICATION

GROUP 21A - TRANSMISSION, AUTO.

ILLUSTRATION TITLE	GROUP-FIG. NO.
TRANSMISSION ASSEMBLIES AUTOMATIC - THREE SPEED	Fig. 21A-100
GASKET AND SEAL PACKAGE, REPAIR AUTOMATIC TRANSMISSION - A904, A999	Fig. 21A-200
CASE, ADAPTER AND MISC. PARTS AUTOMATIC TRANSMISSION - A904, A999	Fig. 21A-300
PUMP, OIL AND GEAR TRAIN AUTOMATIC TRANSMISSION - A904, A999	Fig. 21A-400
GOVERNOR AND PARKING SPRAG AUTOMATIC TRANSMISSION - A904, A999	Fig. 21A-500
SERVOS, ACCUMULATOR AND VALVE BODY AUTOMATIC TRANSMISSION - A904, A999	Fig. 21A-600
CLUTCH, FRONT AND REAR AUTOMATIC TRANSMISSION - A904, A999	Fig. 21A-700
CASE, ADAPTER & MISCELLANEOUS PARTS AUTOMATIC TRANSMISSION - A727	Fig. 21A-800
GASKET AND SEAL PACKAGE, REPAIR AUTOMATIC TRANSMISSION - A727	Fig. 21A-900
OIL PUMP, GEAR TRAIN, OUTPUT SHAFT AUTOMATIC TRANSMISSION - A727	Fig. 21A-1000
GOVERNOR CONTROL AUTOMATIC TRANSMISSION - A727	Fig. 21A-1100
SERVOS, ACCUMULATOR AND VALVE BODY AUTOMATIC TRANSMISSION - A727	Fig. 21A-1200
CLUTCH, FRONT AND REAR AUTOMATIC TRANSMISSION - A727	Fig. 21A-1300
CONTROLS, SHIFT, LOWER, COLUMN AUTOMATIC TRANSMISSION CJ-5,6,7,8 SCRAMBLER	Fig. 21A-1400
CONTROLS, GEARSHIFT, FLOOR MOUNTED AUTOMATIC TRANSMISSION CJ-5,6,7,8 - (EXPORT RIGHT HAND DRIVE)	Fig. 21A-1500
CONTROLS, GEARSHIFT, FLOOR MOUNTED AUTOMATIC TRANSMISSION XJ CHEROKEE, XJ WAGONEER, COMANCHE	Fig. 21A-1600
CONTROLS, SHIFT, LOWER, COLUMN AUTOMATIC TRANSMISSION SJ WAGONEER, J10, J20	Fig. 21A-1700
CONTROLS, GEARSHIFT, COLUMN MOUNTED AUTOMATIC TRANSMISSION COMANCHE, 1986	Fig. 21A-1800
CABLE, SPEEDOMETER WITH PINION AND ADAPTER AUTOMATIC TRANSMISSION CJ-5,6,7,8 SCRAMBLER	Fig. 21A-1900
CABLE, SPEEDOMETER AND PINION AUTOMATIC TRANSMISSION XJ CHEROKEE, XJ WAGONEER, COMANCHE	Fig. 21A-2000
CABLE, SPEEDOMETER AND PINION AUTOMATIC TRANSMISSION SJ WAGONEER, J10, J20	Fig. 21A-2100

TRANSMISSION ASSEMBLIES AUTOMATIC - THREE SPEED
Figure 21A-100

81J51 100

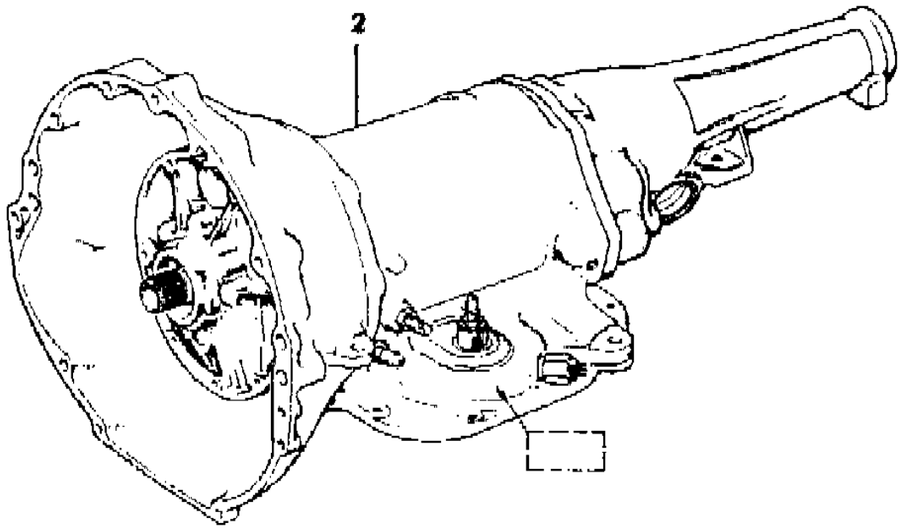

[2WD]

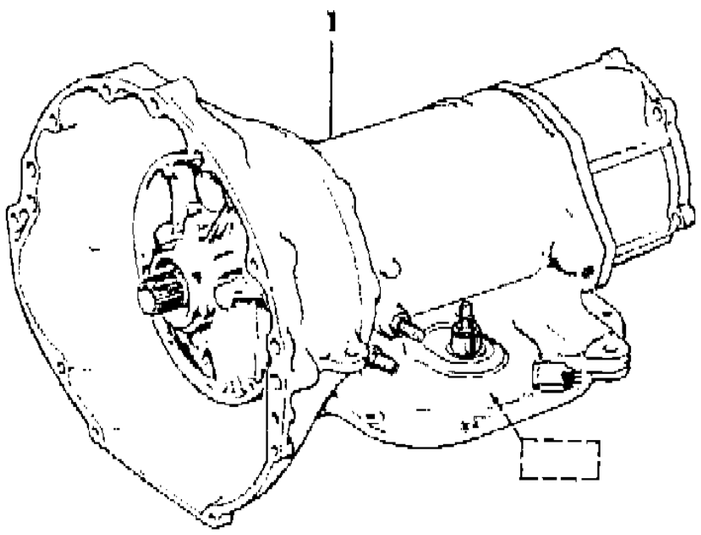

[4WD]

ITEM	PART NUMBER	QTY	BODY	MODEL	DESCRIPTION
1					TRANSMISSION ASSEMBLY, Automatic, 4WD
					Four Cylinder Engine
	J323 8778	1	CJ		1981
	J324 0219	1	CJ		1981: Australian Design Rules, Economic Commission of Europe
					Six Cylinder Engine
	J323 8773	1	CJ		1981
	J324 1098	1	CJ		1982-86: Australian Design Rules, Economic Commission of Europe
	J324 0231	1	CJ		1982-83
	3300 0917	1	CJ		1983-86: Australian Design Rules, Economic Commission of Europe
	3300 0913	1	CJ		1983-84
	3300 0917	1	CJ		1985-86
					Eight Cylinder Engine
	J323 8773	1	CJ		1981
	5300 1141	1	XJ		1984-85: Gas Engine for Transmission 8953001141
	5300 1334	1	XJ		1984-85: Diesel Engine for Transmission 8953001334
	5300 2097	1	XJ,MJ		1986: All Engines
	J323 8774	1	SJ		1981: w/2.73 Ratio
	J323 9817	1	SJ		1981-83: w/3.31 or 3.73 Ratio
	3300 0914	1	SJ		1983-84: w/3.31 or 3.73 Ratio
	J324 0255	1	SJ		1981-83: EXPORT, Australian Design Rules, Economic Commission of Europe
					Six Cylinder Engine
	J324 0231	1	SJ		1982-83: w/2.73 Ratio
	3300 0913	1	SJ		1983-84: w/2.73 Ratio
	3300 0917	1	SJ		1985-86
	5300 1836	1	SJ		1985-86: w/3.31 Ratio
					Eight Cylinder Engine
	3300 0915	1	SJ		1983-84: w/2.73 Ratio
	5300 1836	1	SJ		1985-86
2					TRANSMISSION ASSEMBLY, Automatic, 2WD
					Gas Engine for Transmission 8953002430
	5300 2430	1	XJ		1984-85
	5300 1672	1	XJ,MJ		1986

MODEL CODES

16=Cherokee 2 Dr.(1981-83)	78=Cherokee 4WD-4 Dr.(1984-86)	64=Comanche 2WD-6 Ft. Box(1986)	25=J-10 Truck 7 Ft. Box(1981-84)
17=Cherokee 2 Dr.(1981-83)	85=CJ-5 (1981-83)	66=Comanche 2WD-7 Ft. Box(1986)	26=J10 Truck 8 Ft. Box(1981-86)
73=Cherokee 2WD-2 Dr.(1984-86)	86=CJ-6(1981)	63=Comanche 4WD-6 Ft. Box(1986)	27=J-20 Truck 8 Ft. Box(1981-86)
74=Cherokee 2WD-4 Dr.(1984-86)	87=CJ-7(1981-86)	65=Comanche 4WD-7 Ft. Box(1986)	15=Wagoneer 4 Dr.(1981-83)
18=Cherokee 4 Dr.(1981-83)	88=CJ-8, Scrambler(1981-86)	15=Grand Wagoneer 4 Dr.(1984-86)	75=Wagoneer 4WD-4 Dr.(1984-86)
77=Cherokee 4WD-2 Dr.(1984-86)			

BODY
CJ=CJ-5, CJ-6, CJ-7, CJ-8, Scrambler(1981-86)
MJ=Comanche Pickup(1986)

STYLES
SJ=Wagoneer(1981-83), Grand Wagoneer(1984-86), Cherokee(1981-83), J-10, J-20(1981-86)
XJ=Wagoneer(1984-86), Cherokee(1984-86)

AR = Use as Required - = Non Illustrated Part P.A.R. = Paint as Required

« RETURN TO GROUP INDEX

GASKET AND SEAL PACKAGE, REPAIR AUTOMATIC TRANSMISSION - A904, A999
Figure 21A-200

81J51 200

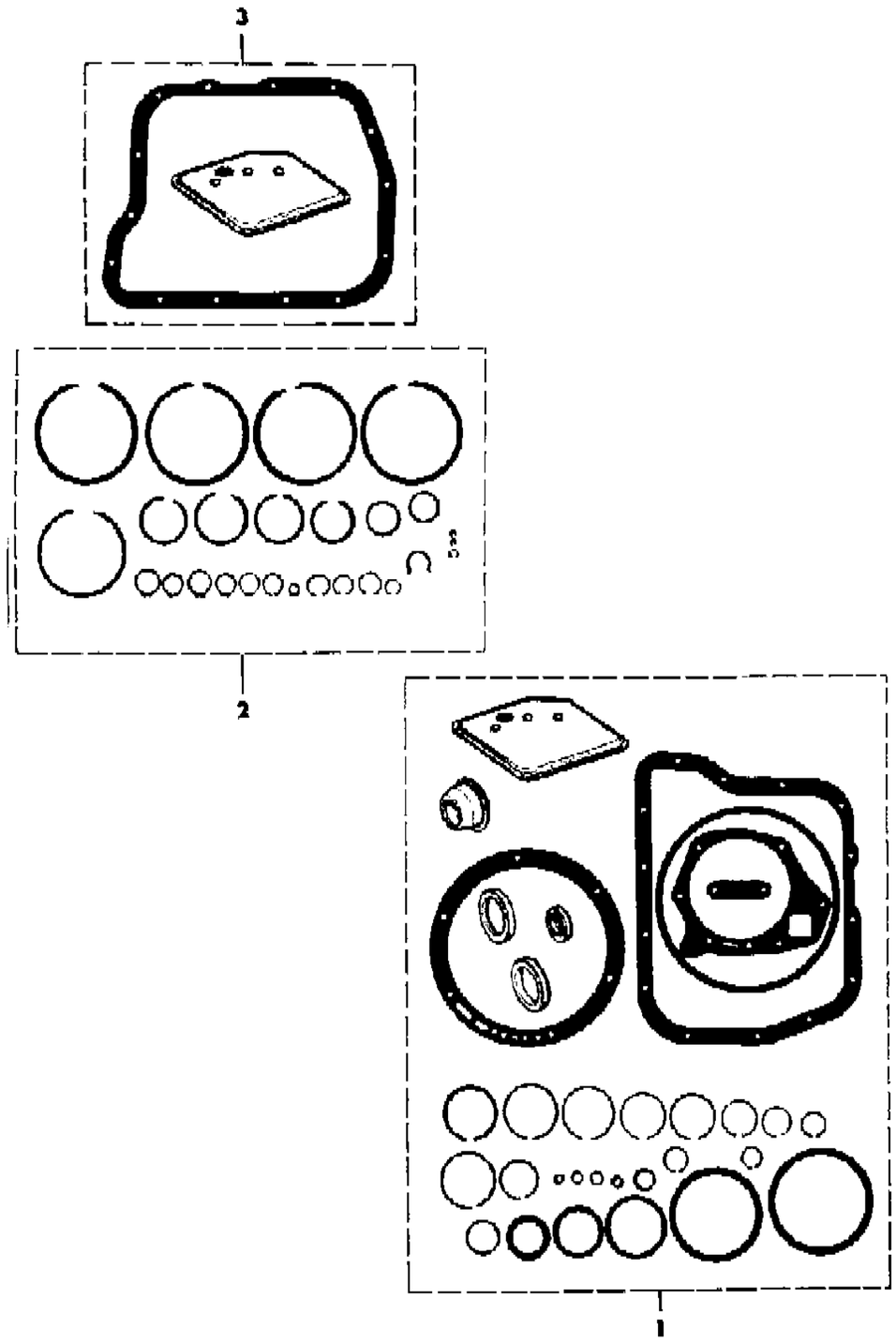

ITEM	PART NUMBER	QTY	BODY	MODEL	DESCRIPTION
1					GASKET PACKAGE, Transmission Overhaul
	J813 0350	1	CJ		1981
	J813 4681	1	CJ		1982-86
	J813 4681	1	XJ		1984-85
	J813 4681	1	XJ,MJ		1986
	J813 4681	1	SJ		For Transmission Tagged 8933000913 or 8933000917
2	J813 0351	1			SNAP RING PACKAGE ***
3	J812 7652	1			FILTER PACKAGE ***

MODEL CODES

16=Cherokee 2 Dr.(1981-83)
17=Cherokee 2 Dr.(1981-83)
73=Cherokee 2WD-2 Dr.(1984-86)
74=Cherokee 2WD-4 Dr.(1984-86)
18=Cherokee 4 Dr.(1981-83)
77=Cherokee 4WD-2 Dr.(1984-86)
78=Cherokee 4WD-4 Dr.(1984-86)
85=CJ-5 (1981-83)
86=CJ-6(1981)
87=CJ-7(1981-86)
88=CJ-8, Scrambler(1981-86)
64=Comanche 2WD-6 Ft. Box(1986)
66=Comanche 2WD-7 Ft. Box(1986)
63=Comanche 4WD-6 Ft. Box(1986)
65=Comanche 4WD-7 Ft. Box(1986)
15=Grand Wagoneer 4 Dr.(1984-86)
25=J-10 Truck 7 Ft. Box(1981-84)
26=J10 Truck 8 Ft. Box(1981-86)
27=J-20 Truck 8 Ft. Box(1981-86)
15=Wagoneer 4 Dr.(1981-83)
75=Wagoneer 4WD-4 Dr.(1984-86)

BODY
CJ=CJ-5, CJ-6, CJ-7, CJ-8, Scrambler(1981-86)
MJ=Comanche Pickup(1986)

STYLES
SJ=Wagoneer(1981-83), Grand Wagoneer(1984-86), Cherokee(1981-83), J-10, J-20(1981-86)
XJ=Wagoneer(1984-86), Cherokee(1984-86)

AR = Use as Required - = Non Illustrated Part P.A.R. = Paint as Required

« RETURN TO GROUP INDEX

CASE, ADAPTER AND MISC. PARTS AUTOMATIC TRANSMISSION - A904, A999
Figure 21A-300

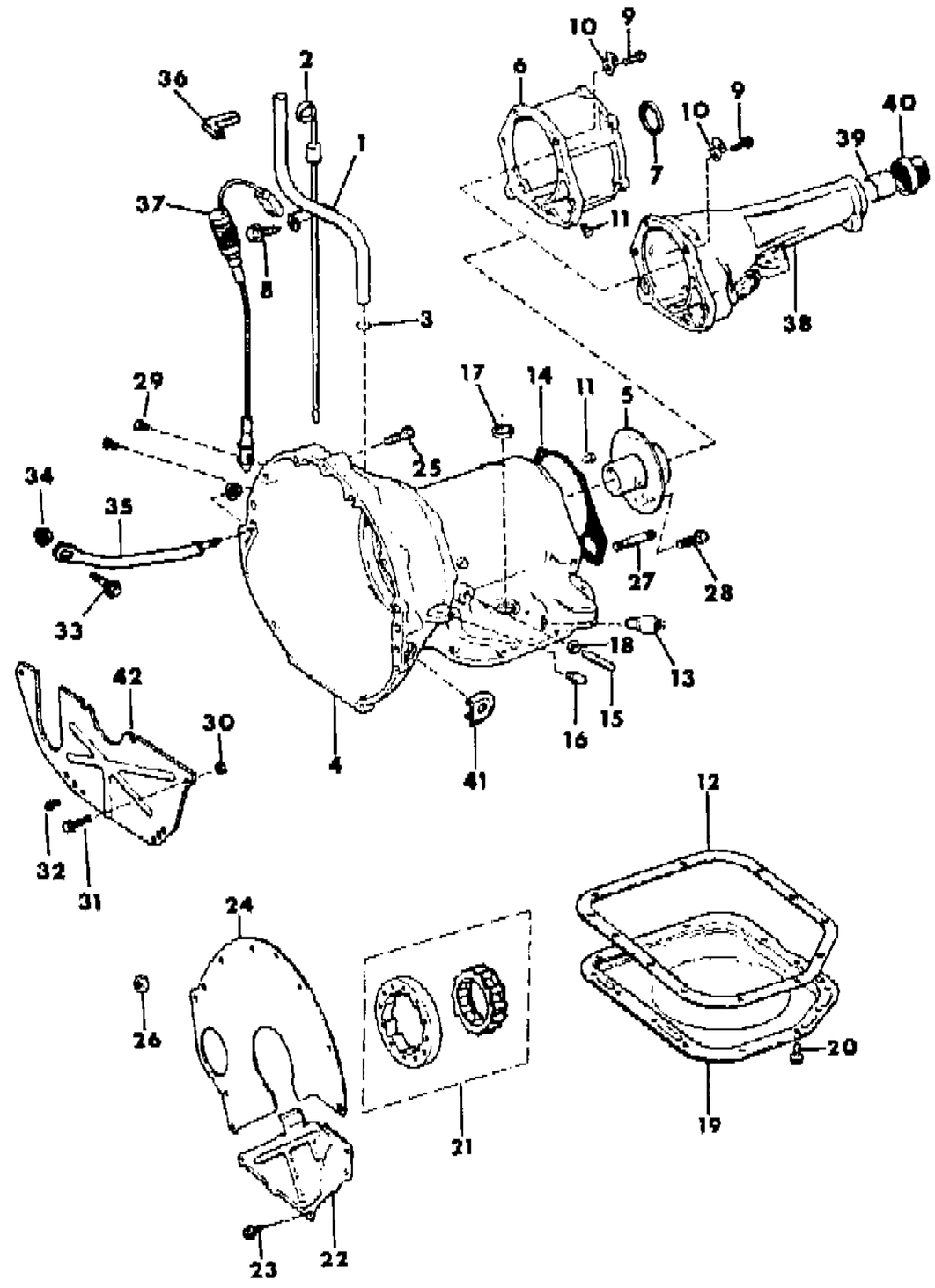

ITEM	PART NUMBER	QTY	BODY	MODEL	DESCRIPTION
1					TUBE, Oil Indicator
	J323 6668	1	CJ		w/J3238778 Transmission
	J536 2058	1	CJ		w/J3238773, J3239816, J3235220, J3240219 Transmission
	5300 1421	1	XJ,MJ		w/Gas Engine
	5300 1454	1	XJ		w/Diesel Engine
	J536 3345	1	SJ		
2					INDICATOR, Transmission Oil Level
	J321 5483	1	CJ		w/J3238778 Transmission
	J536 2008	1	CJ		w/J3238773, J3239816, J3235220, J3240219 Transmission
	5300 0046	1	XJ		1984-85: w/o System Sentry
	5300 0046	1	XJ,MJ		1986
	5300 0046	1	XJ		w/Diesel Engine
	J536 2008	1	SJ		
3	J321 2885	1			O-RING, Oil Indicator Tube
4					CASE, Automatic Transmission
	J813 2481	1	CJ		w/J3238778 Transmission
	J813 0600	1	CJ		w/J3238773, J3239816, J3235220, J3240219 Transmission
	8350 0424	1	XJ		1984-85: w/8953001141 Transmission
	8350 1957	1	XJ		1984-85: w/8953002430 Transmission
	8350 1957	1	XJ,MJ		1986
	8350 1950	1	XJ		w/Diesel Engine
	J813 2810	1	SJ		w/A999 Transmission
5					SUPPORT, Output Shaft
	J813 0841	1	CJ		
	J812 0841	1	XJ,MJ		
	J812 0841	1	SJ		
6					ADAPTER, Transmission to Transfer Case
	J813 2502	1	CJ		w/o 33000913, 33000917 Transmission
	J813 4762	1	CJ		w/33000913, 33000917 Transmission
	J813 4762	1	XJ,MJ		w/Gas Engine
	8350 1948	1	XJ		w/Diesel Engine
	J813 4762	1	SJ		w/A999 Transmission
7					SEAL, Adapter
	J813 2504	1	CJ		w/o 33000913, 33000917 Transmission
	J813 4680	1	CJ		w/33000913, 33000917 Transmission
	J813 4680	1	XJ,MJ		
	J813 4680	1	SJ		
8	J400 1701	1			SCREW, Indicator Tube
9	J813 2505	6			BOLT, Adapter

MODEL CODES

16=Cherokee 2 Dr.(1981-83)	78=Cherokee 4WD-4 Dr.(1984-86)	64=Comanche 2WD-6 Ft. Box(1986)	25=J-10 Truck 7 Ft. Box(1981-84)
17=Cherokee 2 Dr.(1981-83)	85=CJ-5 (1981-83)	66=Comanche 2WD-7 Ft. Box(1986)	26=J10 Truck 8 Ft. Box(1981-86)
73=Cherokee 2WD-2 Dr.(1984-86)	86=CJ-6(1981)	63=Comanche 4WD-6 Ft. Box(1986)	27=J-20 Truck 8 Ft. Box(1981-86)
74=Cherokee 2WD-4 Dr.(1984-86)	87=CJ-7(1981-86)	65=Comanche 4WD-7 Ft. Box(1986)	15=Wagoneer 4 Dr.(1981-83)
18=Cherokee 4 Dr.(1981-83)	88=CJ-8, Scrambler(1981-86)	15=Grand Wagoneer 4 Dr.(1984-86)	75=Wagoneer 4WD-4 Dr.(1984-86)
77=Cherokee 4WD-2 Dr.(1984-86)			

BODY
CJ=CJ-5, CJ-6, CJ-7, CJ-8, Scrambler(1981-86)
MJ=Comanche Pickup(1986)

STYLES
SJ=Wagoneer(1981-83), Grand Wagoneer(1984-86), Cherokee(1981-83), J-10, J-20(1981-86)
XJ=Wagoneer(1984-86), Cherokee(1984-86)

AR = Use as Required - = Non Illustrated Part P.A.R. = Paint as Required

« RETURN TO GROUP INDEX »

CASE, ADAPTER AND MISC. PARTS AUTOMATIC TRANSMISSION - A904, A999
Figure 21A-300

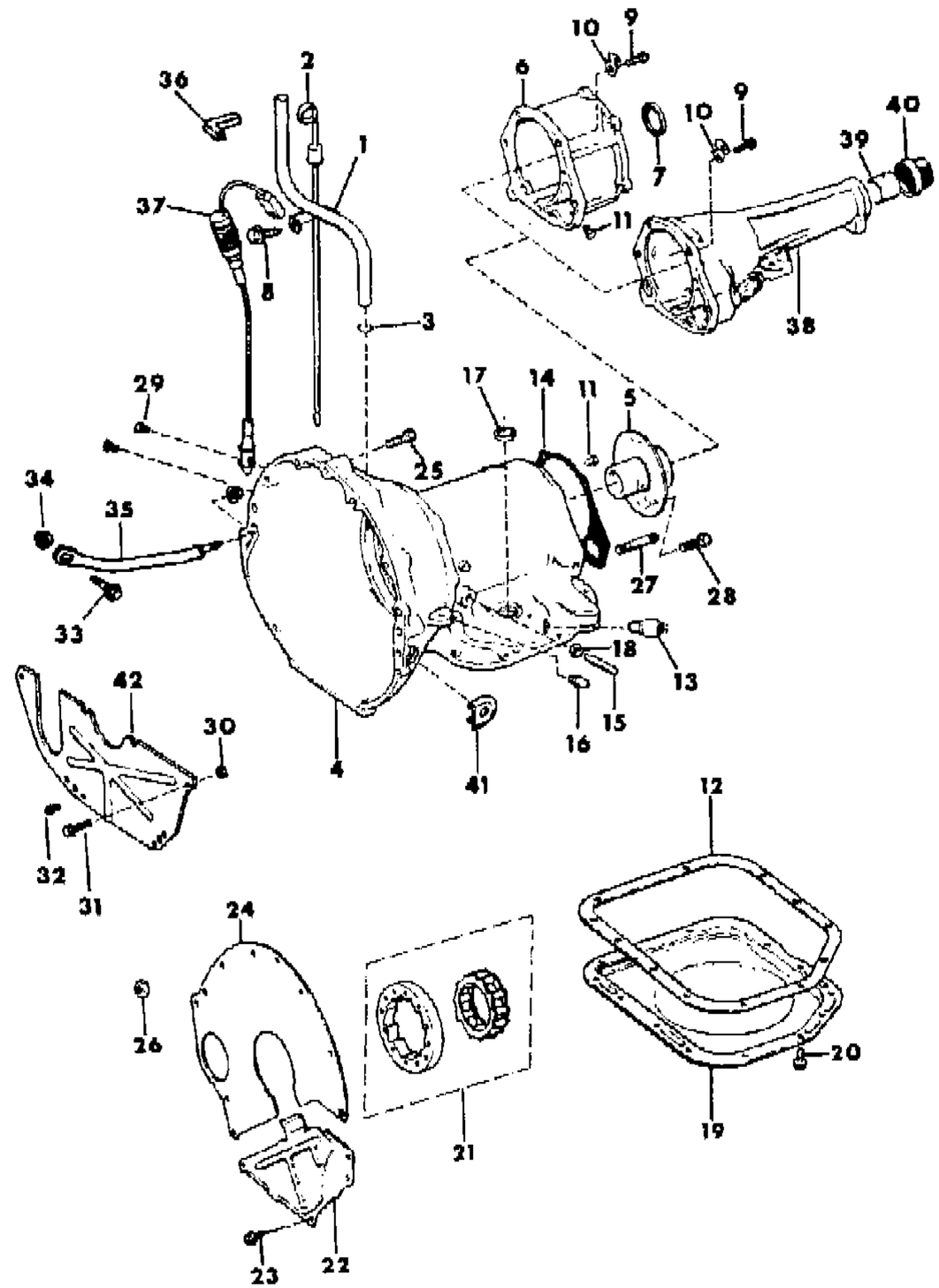

ITEM	PART NUMBER	QTY	BODY	MODEL	DESCRIPTION
10	J812 1160	1			CLIP
11	J812 0840	2			PLUG, Pressure Check
12					GASKET, Transmission Oil Pan
	J813 6640	1	CJ		
	J812 0983	1	XJ		1984-85: w/Gas Engine
	J813 6640	1	XJ,MJ		1986: w/Gas Engine
	J812 0983	1	XJ		w/Diesel Engine
	J813 6640	1	SJ		
13	J323 2844	1			SWITCH, Neutral Starter and B/U Light
14	J812 0979	1			GASKET, Case to Adapter or Ext.
15					SCREW, Kickdown Band Adjusting
	J812 1085	1	CJ		
	J812 1085	1	XJ		1984-85: w/Gas Engine
	J812 1086	1	XJ,MJ		1986: w/Gas Engine
	J812 1086	1	XJ		w/Diesel Engine
	J812 1085	1	SJ		
16	J813 2511	1			FITTING, Oil Cooler Tube
17	J812 6794	1			SEAL, Manual Valve Lever Shaft
18		1			NUT (Not Serviced) ***
19	J812 8964	1			PAN, Transmission Oil
20	6023 355	14			SCREW, Transmission Pan, 5/16-18x5/8"
21	J812 4585	1			CLUTCH PACKAGE, Overrunning
22					COVER
	J325 1259	1	CJ		w/J3238778 Transmission
	J321 3744	1	CJ		w/J3238778, J3239816, J3235220, J3240219 Transmission
	J321 3744	1	SJ		
23					SCREW
	J400 0987	2	CJ		
	J400 0987	4	SJ		
24					SPACER
	J321 3743	1	CJ		
	J321 3743	1	SJ		
25					BOLT
	J400 1885	5	CJ		
	3420 1663	AR	XJ,MJ		30mm Long
	3420 1949	AR	XJ,MJ		70mm Long
	3420 1465	AR	XJ,MJ		80mm Long
					STUD
	3420 2115	2	XJ,MJ		1986: Not Shown

MODEL CODES

16=Cherokee 2 Dr.(1981-83)	78=Cherokee 4WD-4 Dr.(1984-86)	64=Comanche 2WD-6 Ft. Box(1986)	25=J-10 Truck 7 Ft. Box(1981-84)
17=Cherokee 2 Dr.(1981-83)	85=CJ-5 (1981-83)	66=Comanche 2WD-7 Ft. Box(1986)	26=J10 Truck 8 Ft. Box(1981-86)
73=Cherokee 2WD-2 Dr.(1984-86)	86=CJ-6(1981)	63=Comanche 4WD-6 Ft. Box(1986)	27=J-20 Truck 8 Ft. Box(1981-86)
74=Cherokee 2WD-4 Dr.(1984-86)	87=CJ-7(1981-86)	65=Comanche 4WD-7 Ft. Box(1986)	15=Wagoneer 4 Dr.(1981-83)
18=Cherokee 4 Dr.(1981-83)	88=CJ-8, Scrambler(1981-86)	15=Grand Wagoneer 4 Dr.(1984-86)	75=Wagoneer 4WD-4 Dr.(1984-86)
77=Cherokee 4WD-2 Dr.(1984-86)			

BODY
CJ=CJ-5, CJ-6, CJ-7, CJ-8, Scrambler(1981-86)
MJ=Comanche Pickup(1986)

STYLES
SJ=Wagoneer(1981-83), Grand Wagoneer(1984-86), Cherokee(1981-83), J-10, J-20(1981-86)
XJ=Wagoneer(1984-86), Cherokee(1984-86)

AR = Use as Required - = Non Illustrated Part P.A.R. = Paint as Required

CASE, ADAPTER AND MISC. PARTS AUTOMATIC TRANSMISSION - A904, A999
Figure 21A-300

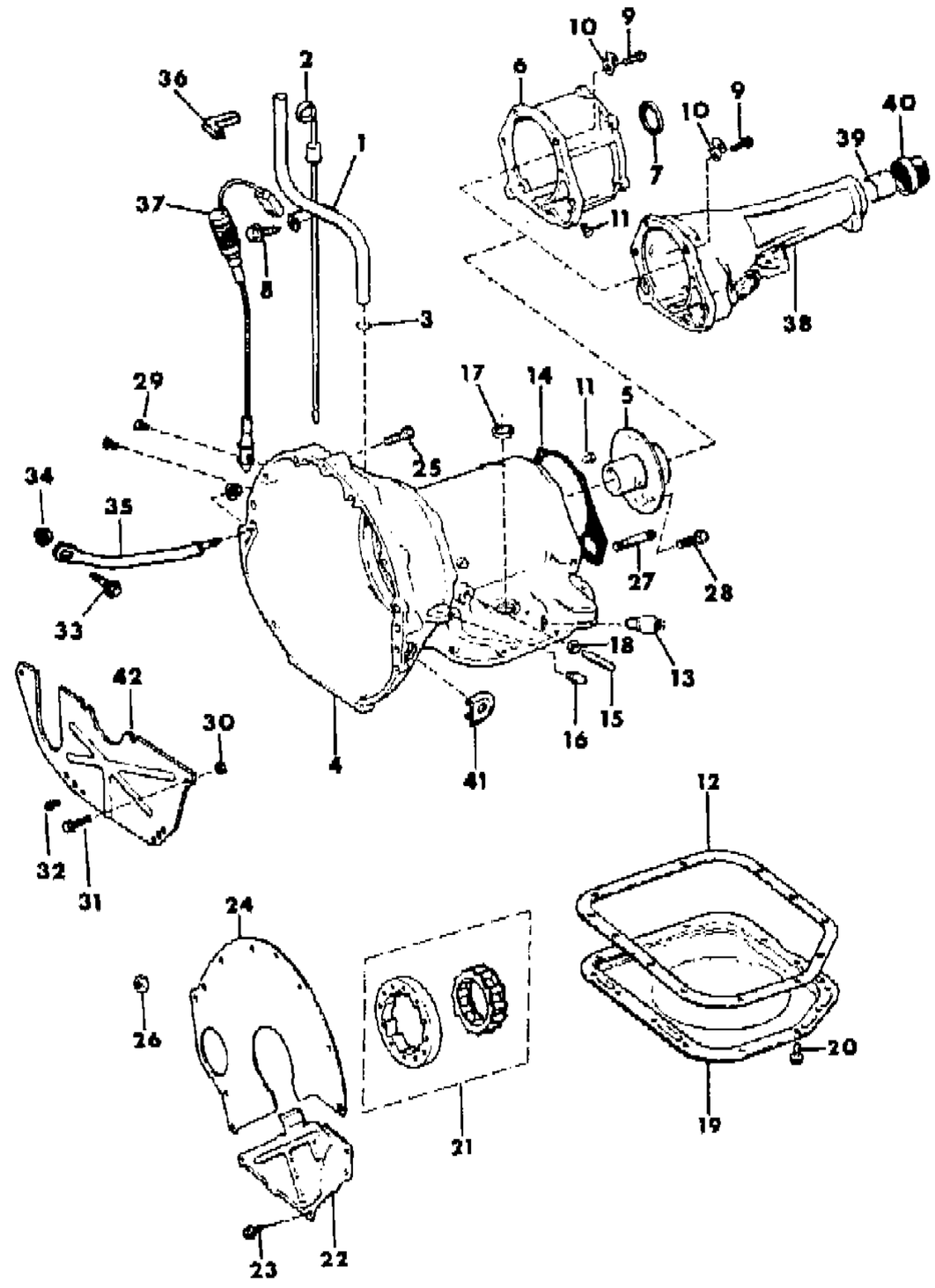

ITEM	PART NUMBER	QTY	BODY	MODEL	DESCRIPTION
					NUT, Stud
	J400 6715	2	XJ,MJ		1986: Not Shown
					BOLT
	3420 2029	6	XJ		50mm Long, w/Diesel Engine
	3420 2027	1	XJ		60mm Long, w/Diesel Engine
	3420 1927	2	XJ		75mm Long, w/Diesel Engine
	3420 2028	4	XJ		95mm Long, w/Diesel Engine
	J400 1885	5	SJ		55mm Long, w/A999 Transmission
	J400 4370	2	SJ		70mm Long, w/A999 Transmission
26	J021 9422	2	CJ,SJ		NUT
27	8350 2996	1	CJ		STUD
28	J018 0079	4			BOLT, Support
29	8350 5555	3	CJ,SJ		PLUG, Pressure Check
30					NUT
	1150 3745	1	XJ		1984-85
	J420 0046	1	XJ,MJ		1986
31					BOLT, 25mm Long
	3420 1686	1	XJ		1984-85
	1150 2628	1	XJ,MJ		1986
32					BOLT
	3420 1749	3	XJ,MJ		20mm Long
33					BOLT
	3420 1389	1	XJ,MJ		35mm Long
34	1150 2813	2	XJ,MJ		NUT
35					BRACE
	5300 1596	1	XJ,MJ		w/Four Cylinder Engine
36					PROTECTOR, Hose
	5300 3012	1	XJ		1985
37					SENSOR, Transmission Oil Level
	5300 1213	1	XJ		1984-85: w/System Sentry
38					EXTENSION, Transmission
	J812 2738	1	XJ,MJ		2WD
39					BUSHING, Transmission Extension
	J812 1152	1	XJ,MJ		2WD
40					SEAL, Extension
	J812 2739	1	XJ,MJ		2WD
41					GROMMET, Sensor
	5300 3787	1	XJ,MJ		1986
42					COVER, Converter

MODEL CODES

16=Cherokee 2 Dr.(1981-83)
17=Cherokee 2 Dr.(1981-83)
73=Cherokee 2WD-2 Dr.(1984-86)
74=Cherokee 2WD-4 Dr.(1984-86)
18=Cherokee 4 Dr.(1981-83)
77=Cherokee 4WD-2 Dr.(1984-86)
78=Cherokee 4WD-4 Dr.(1984-86)
85=CJ-5 (1981-83)
86=CJ-6(1981)
87=CJ-7(1981-86)
88=CJ-8, Scrambler(1981-86)
64=Comanche 2WD-6 Ft. Box(1986)
66=Comanche 2WD-7 Ft. Box(1986)
63=Comanche 4WD-6 Ft. Box(1986)
65=Comanche 4WD-7 Ft. Box(1986)
15=Grand Wagoneer 4 Dr.(1984-86)
25=J-10 Truck 7 Ft. Box(1981-84)
26=J10 Truck 8 Ft. Box(1981-86)
27=J-20 Truck 8 Ft. Box(1981-86)
15=Wagoneer 4 Dr.(1981-83)
75=Wagoneer 4WD-4 Dr.(1984-86)

BODY
CJ=CJ-5, CJ-6, CJ-7, CJ-8, Scrambler(1981-86)
MJ=Comanche Pickup(1986)

STYLES
SJ=Wagoneer(1981-83), Grand Wagoneer(1984-86), Cherokee(1981-83), J-10, J-20(1981-86)
XJ=Wagoneer(1984-86), Cherokee(1984-86)

AR = Use as Required - = Non Illustrated Part P.A.R. = Paint as Required

CASE, ADAPTER AND MISC. PARTS AUTOMATIC TRANSMISSION - A904, A999
Figure 21A-300

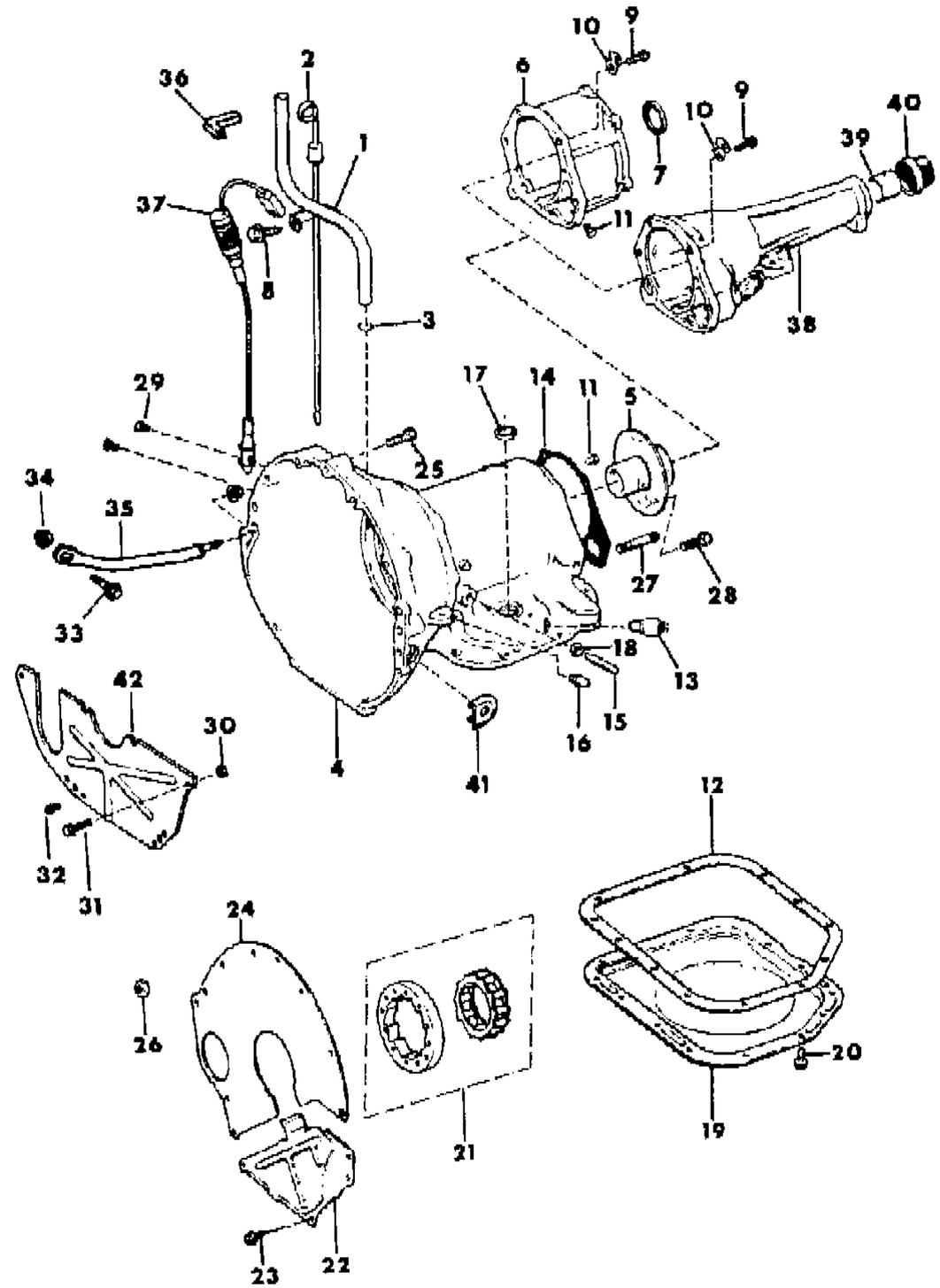

ITEM	PART NUMBER	QTY	BODY	MODEL	DESCRIPTION
	5300 2777	1	XJ		1984-85: w/Four Cylinder Gas Engine
	5300 3381	1	XJ,MJ		1986: w/Four Cylinder Gas Engine
	5300 1336	1	XJ		w/Diesel Engine
	5300 1402	1	XJ,MJ		w/Six Cylinder Engine

MODEL CODES

16=Cherokee 2 Dr.(1981-83)
17=Cherokee 2 Dr.(1981-83)
73=Cherokee 2WD-2 Dr.(1984-86)
74=Cherokee 2WD-4 Dr.(1984-86)
18=Cherokee 4 Dr.(1981-83)
77=Cherokee 4WD-2 Dr.(1984-86)
78=Cherokee 4WD-4 Dr.(1984-86)
85=CJ-5 (1981-83)
86=CJ-6(1981)
87=CJ-7(1981-86)
88=CJ-8, Scrambler(1981-86)
64=Comanche 2WD-6 Ft. Box(1986)
66=Comanche 2WD-7 Ft. Box(1986)
63=Comanche 4WD-6 Ft. Box(1986)
65=Comanche 4WD-7 Ft. Box(1986)
15=Grand Wagoneer 4 Dr.(1984-86)
25=J-10 Truck 7 Ft. Box(1981-84)
26=J10 Truck 8 Ft. Box(1981-86)
27=J-20 Truck 8 Ft. Box(1981-86)
15=Wagoneer 4 Dr.(1981-83)
75=Wagoneer 4WD-4 Dr.(1984-86)

BODY
CJ=CJ-5, CJ-6, CJ-7, CJ-8, Scrambler(1981-86)
MJ=Comanche Pickup(1986)

STYLES
SJ=Wagoneer(1981-83), Grand Wagoneer(1984-86), Cherokee(1981-83), J-10, J-20(1981-86)
XJ=Wagoneer(1984-86), Cherokee(1984-86)

AR = Use as Required - = Non Illustrated Part P.A.R. = Paint as Required

« RETURN TO GROUP INDEX

PUMP, OIL AND GEAR TRAIN AUTOMATIC TRANSMISSION - A904, A999
Figure 21A-400

81J51 400

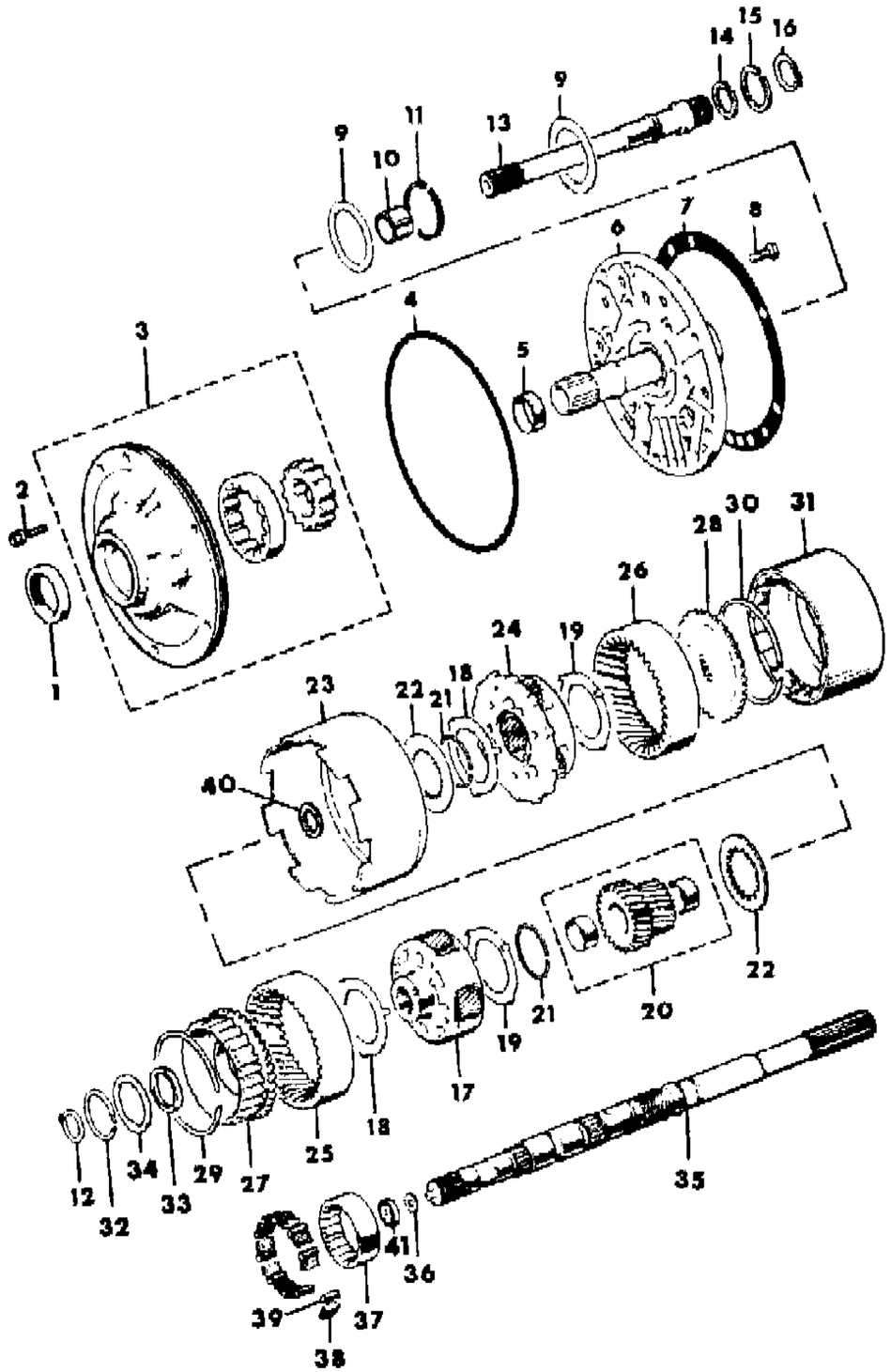

ITEM	PART NUMBER	QTY	BODY	MODEL	DESCRIPTION
1					SEAL, T/Converter Impeller Hub
	J812 2838	1	CJ,SJ		
	J813 4675	1	XJ,MJ		
2	J812 0871	6			SCREW, Pump
3					PUMP, Transmission Oil
	J813 0353	1	CJ		
	J813 4676	1	XJ		1984-85: w/Gas Engine
	8350 1958	1	XJ		w/Diesel Engine
	J813 0353	1	XJ,MJ		1986: w/Gas Engine
	J813 0353	1	SJ		w/A999 Transmission
4					SEAL
	J812 6789	1	CJ		
	J812 0858	1	XJ,MJ		
	J812 0858	1	SJ		
5	J812 0854	1			BUSHING, Oil Pump
6					SHAFT, Reaction Support
	J812 8972	1	CJ		w/J3238778 Transmission
	J813 0336	1	CJ		w/J3238778, J3240231, 33000913 Transmission
	J812 8971	1	CJ		w/J3240219, J3241098, 33000917 Transmission
	J813 0336	1	XJ,MJ		w/Gas Engine
	8350 1959	1	XJ		w/Diesel Engine
	J813 0336	1	SJ		w/8933000913 Transmission
	J812 8971	1	SJ		w/8933000917 Transmission
7	J812 6903	1			GASKET, Reaction Support
8	0179 815	6			SCREW, Support, 5/16-18 x 11/16"
9	J812 0835	2			WASHER, 2-5/8" O.D.
10	J812 8974	1			BUSHING, .968" O.D.
11					RING, Reaction Support
	J812 6790	2	CJ,SJ		
	J812 0866	2	XJ,MJ		
12					SNAP RING, Output Shaft
	6026 289	AR			.946" I.D., .040" Thick
	6030 938	AR			.910" I.D., .062" Thick, Green
	6030 404	AR			.906" I.D., .084" Thick, White
13					SHAFT, Input
	J813 3780	1	CJ		w/J3238778 Transmission
	J813 0327	1	CJ		w/J3238778, J3240231, 33000913 Transmission
	J813 0344	1	CJ		w/J3240219, J3241098, 33000917 Transmission
	J813 0327	1	XJ,MJ		

MODEL CODES

16=Cherokee 2 Dr.(1981-83)	78=Cherokee 4WD-4 Dr.(1984-86)	64=Comanche 2WD-6 Ft. Box(1986)	25=J-10 Truck 7 Ft. Box(1981-84)
17=Cherokee 2 Dr.(1981-83)	85=CJ-5 (1981-83)	66=Comanche 2WD-7 Ft. Box(1986)	26=J10 Truck 8 Ft. Box(1981-86)
73=Cherokee 2WD-2 Dr.(1984-86)	86=CJ-6(1981)	63=Comanche 4WD-6 Ft. Box(1986)	27=J-20 Truck 8 Ft. Box(1981-86)
74=Cherokee 2WD-4 Dr.(1984-86)	87=CJ-7(1981-86)	65=Comanche 4WD-7 Ft. Box(1986)	15=Wagoneer 4 Dr.(1981-83)
18=Cherokee 4 Dr.(1981-83)	88=CJ-8, Scrambler(1981-86)	15=Grand Wagoneer 4 Dr.(1984-86)	75=Wagoneer 4WD-4 Dr.(1984-86)
77=Cherokee 4WD-2 Dr.(1984-86)			

BODY
CJ=CJ-5, CJ-6, CJ-7, CJ-8, Scrambler(1981-86)
MJ=Comanche Pickup(1986)

STYLES
SJ=Wagoneer(1981-83), Grand Wagoneer(1984-86), Cherokee(1981-83), J-10, J-20(1981-86)
XJ=Wagoneer(1984-86), Cherokee(1984-86)

AR = Use as Required - = Non Illustrated Part P.A.R. = Paint as Required

« RETURN TO GROUP INDEX »

PUMP, OIL AND GEAR TRAIN AUTOMATIC TRANSMISSION - A904, A999
Figure 21A-400

81J51 400

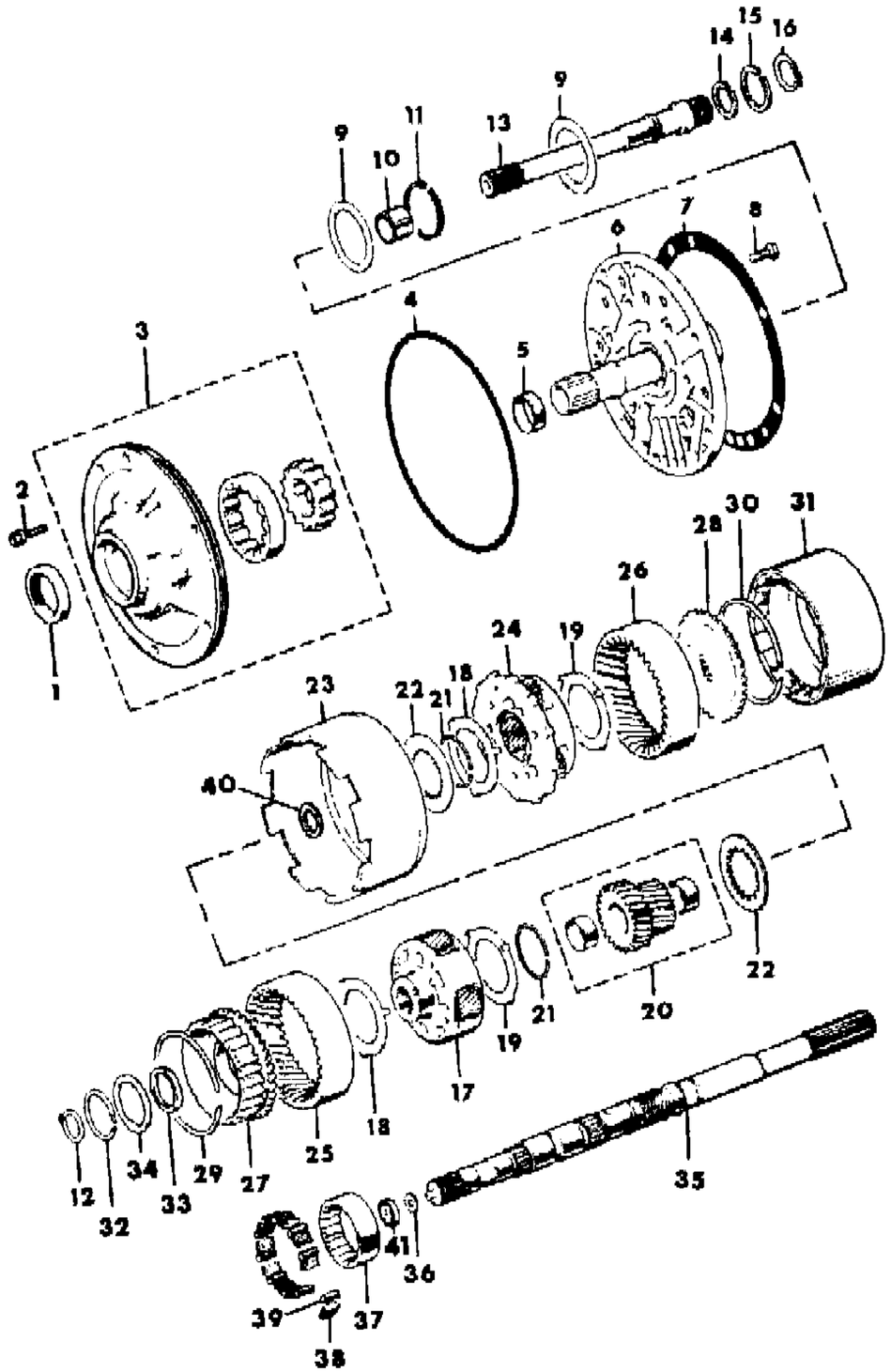

ITEM	PART NUMBER	QTY	BODY	MODEL	DESCRIPTION
	J813 0327	1	SJ		w/8933000913 Transmission
	J813 0344	1	SJ		w/8933000917 Transmission
14	J812 0910	1			RING, Sealing Input Shaft
15	J812 8981	1			SEAL
16	6022 859	1			SNAP RING, Input Shaft, 57/64", .059" Thick
17					CARRIER ASSEMBLY, Front Planetary
	J813 3395	1	CJ		w/J3238778, J3240231, J3241098, 8933000913, 8933000917 Transmission
	J812 4323	1	CJ		w/J3238773, J3240219 Transmission
	J813 3395	1	XJ,MJ		
	J813 3395	1	SJ		
18					WASHER, 2-5/8" I.D., w/4 Tabs I.D.
	J813 3394	2	CJ		
	J813 3394	1	XJ,MJ		
19					WASHER, 2" I.D., w/4 Tabs O.D.
	J812 4320	2	CJ		
	J812 4319	3	XJ,MJ		
	J812 4320	4	SJ		
20					GEAR ASSEMBLY, Sun w/Bushings
	J813 3389	1	CJ		w/J3238778, J3240231, J3241098, 8933000913, 8933000917 Transmission
	J812 4321	1	CJ		w/J3238773, J3240219 Transmission
	J813 3389	1	XJ,MJ		
	J813 3389	1	SJ		
21	J812 1024	2			RING, Locking, 1-41/64" O.D.
22					PLATE
	J813 3391	2	CJ		w/J3238778, J3240231, J3241098, 8933000913, 8933000917 Transmission
	J812 4325	2	CJ		w/J3238773, J3240219 Transmission
	J813 3391	2	XJ,MJ		
	J813 3391	2	SJ		
23					SHELL, Sun Gear
	J813 3390	1	CJ		w/J3238778, J3240231, J3241098, 8933000913, 8933000917 Transmission
	J812 1019	1	CJ		w/J3238773, J3240219 Transmission
	J813 3390	1	XJ,MJ		
	J813 3390	1	SJ		
24					CARRIER ASSEMBLY, Rear Planetary
	J812 4324	1	CJ		w/J3238778 Transmission

MODEL CODES

16=Cherokee 2 Dr.(1981-83)	78=Cherokee 4WD-4 Dr.(1984-86)	64=Comanche 2WD-6 Ft. Box(1986)	25=J-10 Truck 7 Ft. Box(1981-84)
17=Cherokee 2 Dr.(1981-83)	85=CJ-5 (1981-83)	66=Comanche 2WD-7 Ft. Box(1986)	26=J10 Truck 8 Ft. Box(1981-86)
73=Cherokee 2WD-2 Dr.(1984-86)	86=CJ-6(1981)	63=Comanche 4WD-6 Ft. Box(1986)	27=J-20 Truck 8 Ft. Box(1981-86)
74=Cherokee 2WD-4 Dr.(1984-86)	87=CJ-7(1981-86)	65=Comanche 4WD-7 Ft. Box(1986)	15=Wagoneer 4 Dr.(1981-83)
18=Cherokee 4 Dr.(1981-83)	88=CJ-8, Scrambler(1981-86)	15=Grand Wagoneer 4 Dr.(1984-86)	75=Wagoneer 4WD-4 Dr.(1984-86)
77=Cherokee 4WD-2 Dr.(1984-86)			

BODY
CJ=CJ-5, CJ-6, CJ-7, CJ-8, Scrambler(1981-86)
MJ=Comanche Pickup(1986)

STYLES
SJ=Wagoneer(1981-83), Grand Wagoneer(1984-86), Cherokee(1981-83), J-10, J-20(1981-86)
XJ=Wagoneer(1984-86), Cherokee(1984-86)

AR = Use as Required - = Non Illustrated Part P.A.R. = Paint as Required

PUMP, OIL AND GEAR TRAIN AUTOMATIC TRANSMISSION - A904, A999
Figure 21A-400

81J51 400

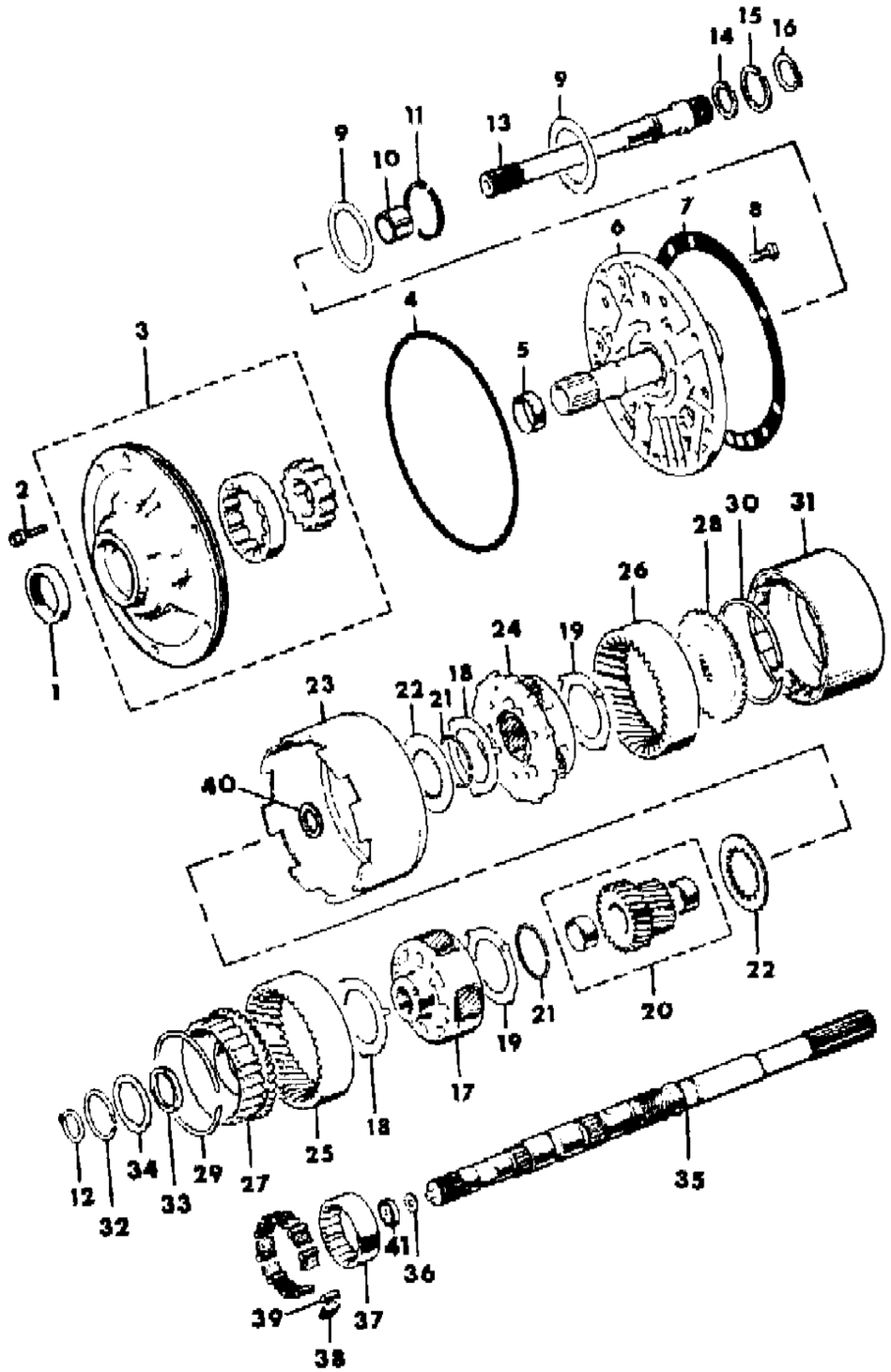

ITEM	PART NUMBER	QTY	BODY	MODEL	DESCRIPTION
	J812 4325	1	CJ		w/o J3238778 Transmission
	J812 4324	1	XJ		1984-85
	J812 4325	1	XJ,MJ		1986
	J812 4325	1	SJ		
25					GEAR, Front Annulus
	J813 3393	1	CJ		w/J3238778, 8933000913, 8933000917 Transmission
	J812 4159	1	CJ		w/J3238773, J3240219, J3240231, J3241098 Transmission
	J813 3393	1	XJ,MJ		
	J813 3393	1	SJ		
26	J812 4159	1			GEAR, Rear Annulus
27					SUPPORT, Front Annulus Gear
	J813 3396	1	CJ		w/J3238778 Transmission
	J812 4858	1	CJ		w/o J3238778 Transmission
	J813 3396	1	XJ,MJ		
	J812 4858	1	SJ		
28	J812 1074	1			SUPPORT, Rear Annulus Gear
29					SNAP RING, Front Annulus Gear, 5-5/8" O.D.
	J813 3397	2	CJ		w/J3238778 Transmission
	J813 3397	1	XJ,MJ		
30					SNAP RING, Rear Annulus Gear, 4-1/16" O.D.
	J812 1014	2	CJ		w/o J3238778 Transmission
	J812 1014	1	XJ,MJ		
	J812 1014	2	SJ		
31					DRUM, Reverse
	8350 4126	1	CJ		
	J813 2492	1	XJ,MJ		
	J813 2492	1	SJ		
32	J812 4583	1			SNAP RING, Front Annulus Gear Support
33	J812 4860	1			BUSHING
34	J812 4582	1			WASHER, Front Annulus Thrust
35					SHAFT, Output
	J813 2490	1	CJ		
	J813 2490	1	XJ		1984-85: w/Gas Engine, w/8953001141 Transmission
	J813 0343	1	XJ		1984-85: w/Gas Engine, w/8953002430 Transmission
	8350 1949	1	XJ		w/Diesel Engine, w/8953001334 Transmission
	J813 2490	1	XJ,MJ		1986: 4WD
	J813 0343	1	XJ,MJ		1986: 2WD
	J813 2490	1	SJ		
36					WASHER, Thrust Output Shaft

MODEL CODES

16=Cherokee 2 Dr.(1981-83)	78=Cherokee 4WD-4 Dr.(1984-86)	64=Comanche 2WD-6 Ft. Box(1986)	25=J-10 Truck 7 Ft. Box(1981-84)
17=Cherokee 2 Dr.(1981-83)	85=CJ-5 (1981-83)	66=Comanche 2WD-7 Ft. Box(1986)	26=J10 Truck 8 Ft. Box(1981-86)
73=Cherokee 2WD-2 Dr.(1984-86)	86=CJ-6(1981)	63=Comanche 4WD-6 Ft. Box(1986)	27=J-20 Truck 8 Ft. Box(1981-86)
74=Cherokee 2WD-4 Dr.(1984-86)	87=CJ-7(1981-86)	65=Comanche 4WD-7 Ft. Box(1986)	15=Wagoneer 4 Dr.(1981-83)
18=Cherokee 4 Dr.(1981-83)	88=CJ-8, Scrambler(1981-86)	15=Grand Wagoneer 4 Dr.(1984-86)	75=Wagoneer 4WD-4 Dr.(1984-86)
77=Cherokee 4WD-2 Dr.(1984-86)			

BODY
CJ=CJ-5, CJ-6, CJ-7, CJ-8, Scrambler(1981-86)
MJ=Comanche Pickup(1986)

STYLES
SJ=Wagoneer(1981-83), Grand Wagoneer(1984-86), Cherokee(1981-83), J-10, J-20(1981-86)
XJ=Wagoneer(1984-86), Cherokee(1984-86)

AR = Use as Required - = Non Illustrated Part P.A.R. = Paint as Required

PUMP, OIL AND GEAR TRAIN AUTOMATIC TRANSMISSION - A904, A999
Figure 21A-400

81J51 400

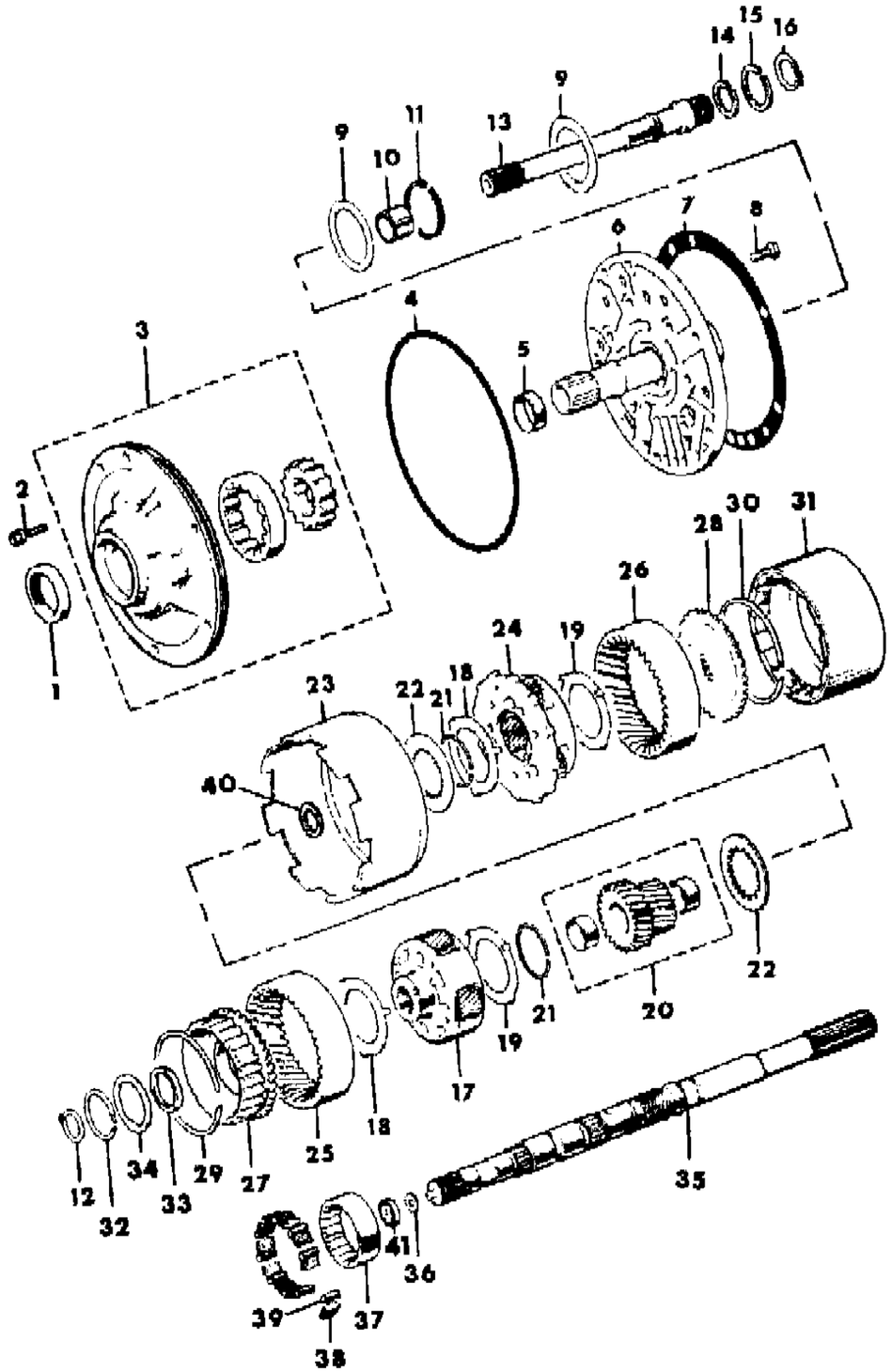

ITEM	PART NUMBER	QTY	BODY	MODEL	DESCRIPTION
	4505 185	AR			.053" Thick
	4505 186	AR			.069" Thick
	4505 187	AR			.084" Thick
37	J812 0849	1			RACE PACKAGE, Overrunning Clutch
38	J812 0845	10			SPRING
39	J812 0847	10			ROLLER, Clutch
40	J813 3392	1			SPACER, Sun Gear
41	J813 0330	1			PLATE

MODEL CODES

16=Cherokee 2 Dr.(1981-83)
17=Cherokee 2 Dr.(1981-83)
73=Cherokee 2WD-2 Dr.(1984-86)
74=Cherokee 2WD-4 Dr.(1984-86)
18=Cherokee 4 Dr.(1981-83)
77=Cherokee 4WD-2 Dr.(1984-86)
78=Cherokee 4WD-4 Dr.(1984-86)
85=CJ-5 (1981-83)
86=CJ-6(1981)
87=CJ-7(1981-86)
88=CJ-8, Scrambler(1981-86)
64=Comanche 2WD-6 Ft. Box(1986)
66=Comanche 2WD-7 Ft. Box(1986)
63=Comanche 4WD-6 Ft. Box(1986)
65=Comanche 4WD-7 Ft. Box(1986)
15=Grand Wagoneer 4 Dr.(1984-86)
25=J-10 Truck 7 Ft. Box(1981-84)
26=J10 Truck 8 Ft. Box(1981-86)
27=J-20 Truck 8 Ft. Box(1981-86)
15=Wagoneer 4 Dr.(1981-83)
75=Wagoneer 4WD-4 Dr.(1984-86)

BODY
CJ=CJ-5, CJ-6, CJ-7, CJ-8, Scrambler(1981-86)
MJ=Comanche Pickup(1986)

STYLES
SJ=Wagoneer(1981-83), Grand Wagoneer(1984-86), Cherokee(1981-83), J-10, J-20(1981-86)
XJ=Wagoneer(1984-86), Cherokee(1984-86)

AR = Use as Required - = Non Illustrated Part P.A.R. = Paint as Required

« RETURN TO GROUP INDEX

GOVERNOR AND PARKING SPRAG AUTOMATIC TRANSMISSION - A904, A999
Figure 21A-500

81J51 500

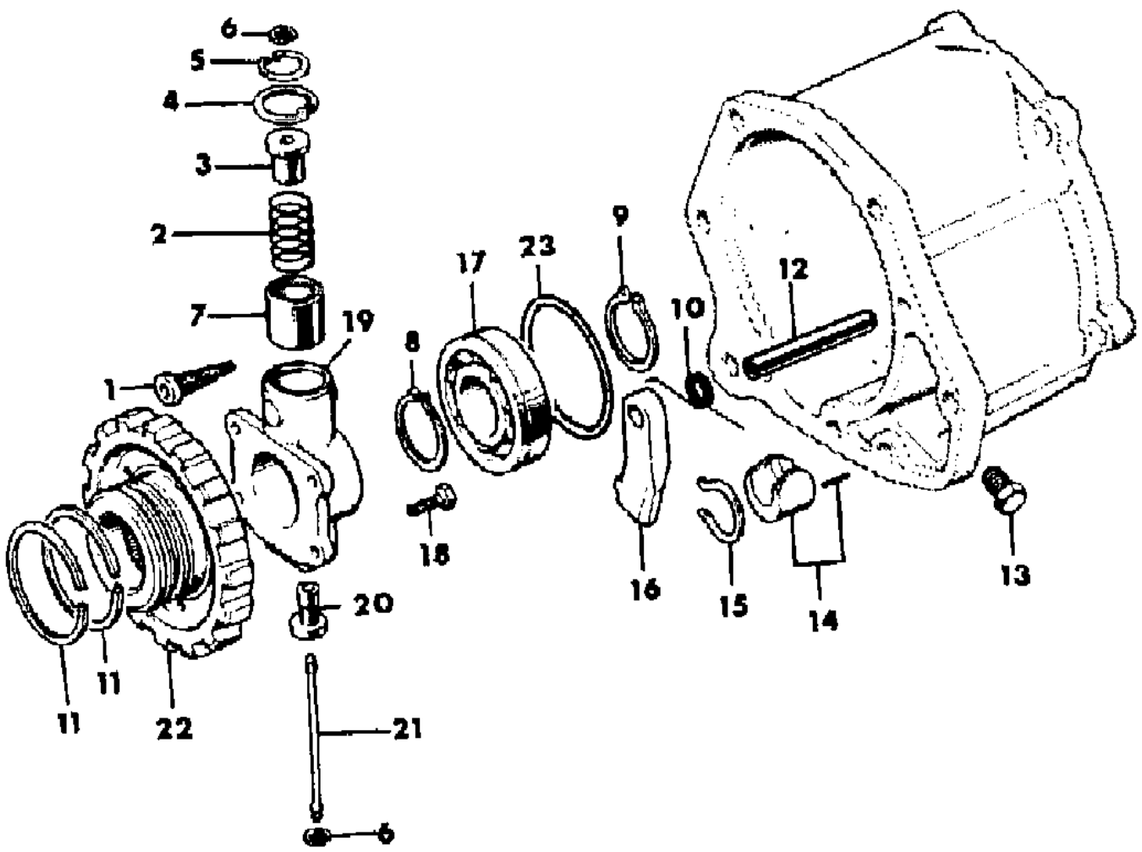

ITEM	PART NUMBER	QTY	BODY	MODEL	DESCRIPTION
1	J812 4464	1			FILTER, Governor
2					SPRING, Weight
	J813 2498	1	CJ		w/J3238778, J3238773, J3240219, 33000917 Transmission
	J813 3858	1	CJ		w/J3240231, J3241098, 33000913, 33000917 Transmission
	8350 0426	1	XJ,MJ		
	J813 2858	1	SJ		
3					WEIGHT, Governor, Inner
	J812 1130	1	CJ		
	8350 0954	1	XJ,MJ		
	J812 1130	1	SJ		
4	J813 0335	1			SNAP RING, Weight, Outer
5	J812 1058	1			SNAP RING, Weight, Inner
6	J812 1059	2			SNAP RING, Valve Shaft
7					WEIGHT, Governor, Outer
	J813 2497	1	CJ		
	8350 0425	1	XJ,MJ		
	J813 2497	1	SJ		
8	J812 1056	1			SNAP RING, Governor Body
9	J813 2500	1			SNAP RING, Output Shaft Bearing
10	J812 1158	1			SPRING
11					RING, Gov. Suppt. Front Seal
	J812 0976	2	CJ		
	J812 0976	2	XJ,MJ		w/Gas Engine
	8350 1960	2	XJ		w/Diesel Engine
	J812 0976	2	SJ		
12	J812 1159	1			SHAFT
13	J812 0840	1			PLUG, Pressure Check
14	J812 1185	1			PLUG, Parking Sprag Reaction
15	J812 1063	1			SNAP RING, Parking Sprag Reaction Plug
16	J812 1157	1			SPRAG, Park
17					BEARING, Output Shaft
	4130 537	1	CJ		
	J812 1077	1	XJ,MJ		2WD
	4130 537	1	SJ		
18					BOLT, Governor Body
	J813 2816	4	CJ		w/J3238778, J3238773, J3240219, 33000917 Transmission
	J813 3781	4	CJ		w/J3240231, J3241098, 33000913, 33000917 Transmission
	J813 3781	4	XJ,MJ		
	J813 2816	4	SJ		

MODEL CODES

16=Cherokee 2 Dr.(1981-83)
17=Cherokee 2 Dr.(1981-83)
73=Cherokee 2WD-2 Dr.(1984-86)
74=Cherokee 2WD-4 Dr.(1984-86)
18=Cherokee 4 Dr.(1981-83)
77=Cherokee 4WD-2 Dr.(1984-86)
78=Cherokee 4WD-4 Dr.(1984-86)
85=CJ-5 (1981-83)
86=CJ-6(1981)
87=CJ-7(1981-86)
88=CJ-8, Scrambler(1981-86)
64=Comanche 2WD-6 Ft. Box(1986)
66=Comanche 2WD-7 Ft. Box(1986)
63=Comanche 4WD-6 Ft. Box(1986)
65=Comanche 4WD-7 Ft. Box(1986)
15=Grand Wagoneer 4 Dr.(1984-86)
25=J-10 Truck 7 Ft. Box(1981-84)
26=J10 Truck 8 Ft. Box(1981-86)
27=J-20 Truck 8 Ft. Box(1981-86)
15=Wagoneer 4 Dr.(1981-83)
75=Wagoneer 4WD-4 Dr.(1984-86)

BODY
CJ=CJ-5, CJ-6, CJ-7, CJ-8, Scrambler(1981-86)
MJ=Comanche Pickup(1986)

STYLES
SJ=Wagoneer(1981-83), Grand Wagoneer(1984-86), Cherokee(1981-83), J-10, J-20(1981-86)
XJ=Wagoneer(1984-86), Cherokee(1984-86)

AR = Use as Required - = Non Illustrated Part P.A.R. = Paint as Required

« RETURN TO GROUP INDEX »

81J51 500

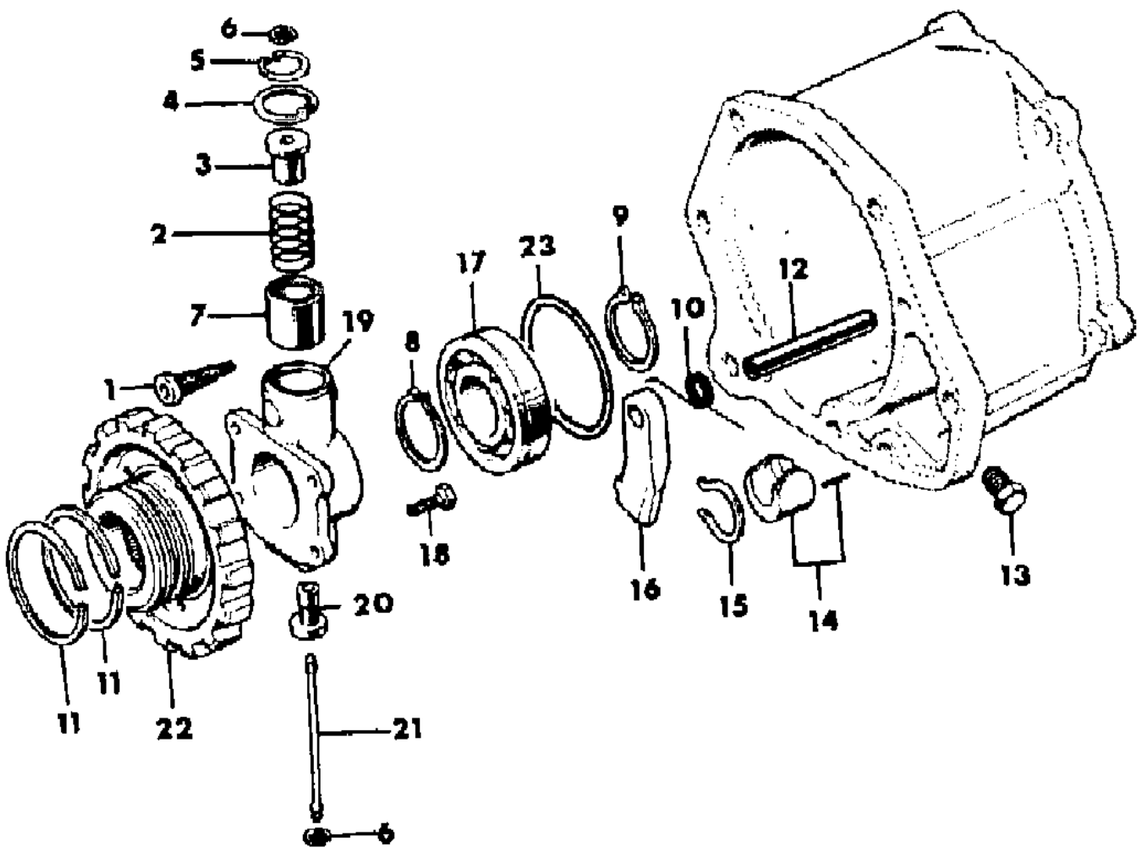

ITEM	PART NUMBER	QTY	BODY	MODEL	DESCRIPTION
19	J813 2495	1			BODY, Governor
20	J812 1149	1			VALVE, Governor
21	J812 1150	1			SHAFT, Governor Valve
22	J812 4461	1			SUPPORT, Trans. Governor
23	6032 739	1			O-RING, Output Shaft Bearing

MODEL CODES

16=Cherokee 2 Dr.(1981-83)
17=Cherokee 2 Dr.(1981-83)
73=Cherokee 2WD-2 Dr.(1984-86)
74=Cherokee 2WD-4 Dr.(1984-86)
18=Cherokee 4 Dr.(1981-83)
77=Cherokee 4WD-2 Dr.(1984-86)
78=Cherokee 4WD-4 Dr.(1984-86)
85=CJ-5 (1981-83)
86=CJ-6(1981)
87=CJ-7(1981-86)
88=CJ-8, Scrambler(1981-86)
64=Comanche 2WD-6 Ft. Box(1986)
66=Comanche 2WD-7 Ft. Box(1986)
63=Comanche 4WD-6 Ft. Box(1986)
65=Comanche 4WD-7 Ft. Box(1986)
15=Grand Wagoneer 4 Dr.(1984-86)
25=J-10 Truck 7 Ft. Box(1981-84)
26=J10 Truck 8 Ft. Box(1981-86)
27=J-20 Truck 8 Ft. Box(1981-86)
15=Wagoneer 4 Dr.(1981-83)
75=Wagoneer 4WD-4 Dr.(1984-86)

BODY
CJ=CJ-5, CJ-6, CJ-7, CJ-8, Scrambler(1981-86)
MJ=Comanche Pickup(1986)

STYLES
SJ=Wagoneer(1981-83), Grand Wagoneer(1984-86), Cherokee(1981-83), J-10, J-20(1981-86)
XJ=Wagoneer(1984-86), Cherokee(1984-86)

AR = Use as Required - = Non Illustrated Part P.A.R. = Paint as Required

SERVOS, ACCUMULATOR AND VALVE BODY AUTOMATIC TRANSMISSION - A904, A999
Figure 21A-600

81J51 600

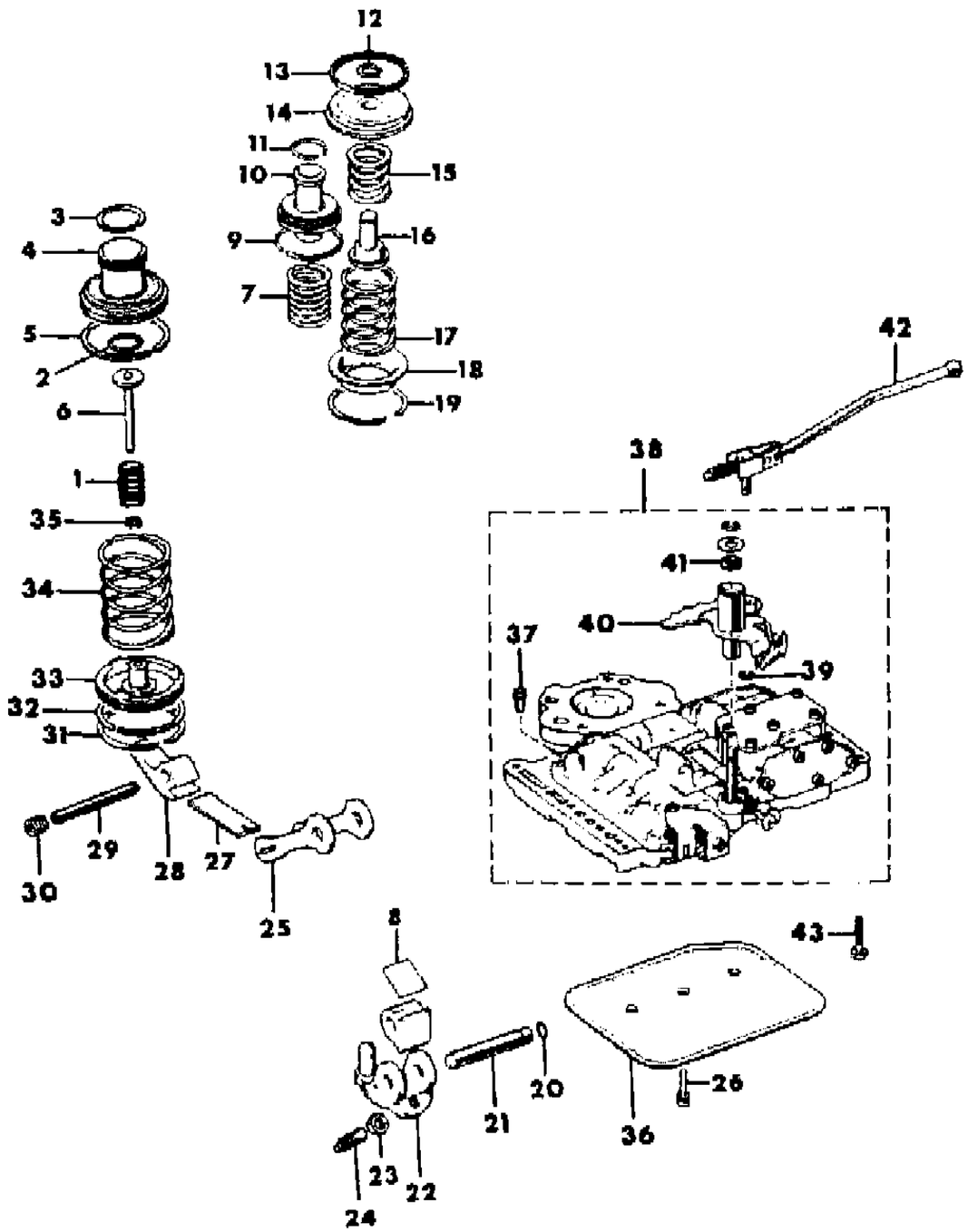

ITEM	PART NUMBER	QTY	BODY	MODEL	DESCRIPTION
1	J812 1099	1			SPRING
2					O-RING, Kickdown Inner Piston
	J813 0334	1	CJ		w/J3238778 Transmission
	J812 4870	1	CJ		w/o J3238778 Transmission
	J813 0334	1	XJ,MJ		
	J812 4870	1	SJ		
3					RING, Kickdown Servo Piston Seal, 1" O.D.
	J812 0968	1	CJ		w/J3238778 Transmission
	J812 0971	1	CJ		w/o J3238778 Transmission
	J812 0968	1	XJ,MJ		
	J812 0987	1	SJ		
4					PISTON, Kickdown Servo
	J813 0331	1	CJ		w/J3238778 Transmission
	J812 8989	1	CJ		w/o J3238778 Transmission
	J813 0331	1	XJ,MJ		
	J812 8989	1	SJ		
5					RING, Kickdown Servo Piston Seal, 2-3/8" O.D.
	J812 0969	1	CJ		w/J3238778 Transmission
	J812 0972	1	CJ		w/o J3238778 Transmission
	J812 0969	1	XJ,MJ		
	J812 0972	1	SJ		
6					ROD, Kickdown Servo
	J813 0332	1	CJ		w/J3238778 Transmission
	J812 8990	1	CJ		w/o J3238778 Transmission
	J813 0332	1	XJ,MJ		
	J812 8990	1	SJ		
7					SPRING
	J812 7837	1			w/J3238778 Transmission
	J813 2508	1			w/J3238778, J3240219 Transmission
	J812 1141	1			w/J3240231, J3241098, 33000913, 33000917 Transmission
	8350 0428	1	XJ		1984-85: w/8953001141, 8953002430 Transmission
	J812 7837	1	XJ		1984-85: w/8953001334 Transmission
	8350 0428	1	XJ,MJ		1986
	J812 1141	1	SJ		
8	J812 3484	1			STRUT, Reverse Band
9	J812 0982	1			RING, Accumulator Piston Seal, Large
10	J812 1054	1			PISTON, Accumulator
11					RING, Accumulator Piston Seal, Small
	J812 6786	1	CJ		

MODEL CODES

16=Cherokee 2 Dr.(1981-83)	78=Cherokee 4WD-4 Dr.(1984-86)	64=Comanche 2WD-6 Ft. Box(1986)	25=J-10 Truck 7 Ft. Box(1981-84)
17=Cherokee 2 Dr.(1981-83)	85=CJ-5 (1981-83)	66=Comanche 2WD-7 Ft. Box(1986)	26=J10 Truck 8 Ft. Box(1981-86)
73=Cherokee 2WD-2 Dr.(1984-86)	86=CJ-6(1981)	63=Comanche 4WD-6 Ft. Box(1986)	27=J-20 Truck 8 Ft. Box(1981-86)
74=Cherokee 2WD-4 Dr.(1984-86)	87=CJ-7(1981-86)	65=Comanche 4WD-7 Ft. Box(1986)	15=Wagoneer 4 Dr.(1981-83)
18=Cherokee 4 Dr.(1981-83)	88=CJ-8, Scrambler(1981-86)	15=Grand Wagoneer 4 Dr.(1984-86)	75=Wagoneer 4WD-4 Dr.(1984-86)
77=Cherokee 4WD-2 Dr.(1984-86)			

BODY
CJ=CJ-5, CJ-6, CJ-7, CJ-8, Scrambler(1981-86)
MJ=Comanche Pickup(1986)

STYLES
SJ=Wagoneer(1981-83), Grand Wagoneer(1984-86), Cherokee(1981-83), J-10, J-20(1981-86)
XJ=Wagoneer(1984-86), Cherokee(1984-86)

AR = Use as Required - = Non Illustrated Part P.A.R. = Paint as Required

« RETURN TO GROUP INDEX »

SERVOS, ACCUMULATOR AND VALVE BODY AUTOMATIC TRANSMISSION - A904, A999
Figure 21A-600

81J51 600

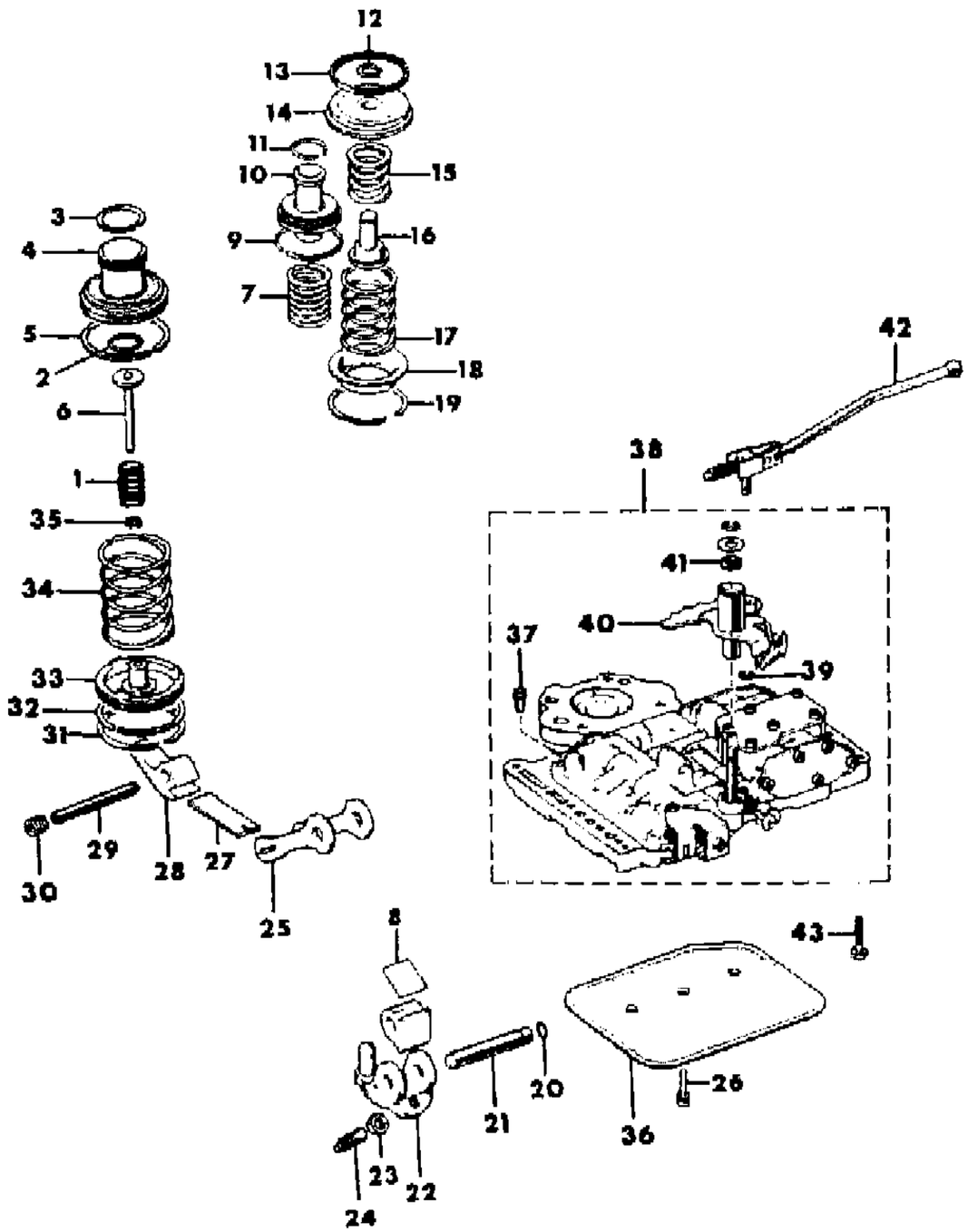

ITEM	PART NUMBER	QTY	BODY	MODEL	DESCRIPTION
	J812 0981	1	XJ,MJ		
	J812 6786	1	SJ		
12	J812 1174	1			SNAP RING, Reverse Servo Plug
13	J812 0992	1			SEAL, Reverse Servo Piston
14	J812 1180	1			PISTON, Reverse Servo
15					SPRING, Reverse Servo
	J812 4581	1	CJ		w/J3238778 Transmission
	J813 0603	1	CJ		w/o J3238778 Transmission
	J812 4581	1	XJ,MJ		
	J813 0603	1	SJ		
16					PLUG, Reverse Sevo Piston
	J812 5824	1	CJ		w/J3238778 Transmission
	J812 4497	1	CJ		w/o J3238778 Transmission
	J812 5824	1	XJ,MJ		
	J812 4497	1	SJ		
17	J812 1172	1			SPRING, Reverse Servo Piston
18	J812 1170	1			RETAINER
19	J812 6968	1			SNAP RING, Reverse Servo
20	J812 0989	1			SEAL
21	J812 1183	1			SHAFT, Reverse Band Lever
22					LEVER, Reverse Band
	J812 4875	1	CJ		w/J3238778 Transmission
	J812 1193	1	CJ		w/o J3238778 Transmission
	J812 4875	1	XJ,MJ		
	J812 1193	1	SJ		
23					NUT
	0272 121	1	CJ		w/J3238778 Transmission
	J400 1239	1	CJ		w/o J3238778 Transmission
	J400 1239	1	XJ,MJ		
	J400 1239	1	SJ		
24					SCREW, Band Adjusting
	J812 5825	1	CJ		w/J3238778 Transmission
	J812 1188	1	CJ		w/o J3238778 Transmission
	J812 5825	1	XJ,MJ		
	J812 1188	1	SJ		
25	J812 1048	1			LINK, Reverse Band
26	J812 6893	3			SCREW
27	J812 1087	1			STRUT, Kickdown Band
28					LEVER, Kickdown Band

MODEL CODES
16=Cherokee 2 Dr.(1981-83)
17=Cherokee 2 Dr.(1981-83)
73=Cherokee 2WD-2 Dr.(1984-86)
74=Cherokee 2WD-4 Dr.(1984-86)
18=Cherokee 4 Dr.(1981-83)
77=Cherokee 4WD-2 Dr.(1984-86)
78=Cherokee 4WD-4 Dr.(1984-86)
85=CJ-5 (1981-83)
86=CJ-6(1981)
87=CJ-7(1981-86)
88=CJ-8, Scrambler(1981-86)
64=Comanche 2WD-6 Ft. Box(1986)
66=Comanche 2WD-7 Ft. Box(1986)
63=Comanche 4WD-6 Ft. Box(1986)
65=Comanche 4WD-7 Ft. Box(1986)
15=Grand Wagoneer 4 Dr.(1984-86)
25=J-10 Truck 7 Ft. Box(1981-84)
26=J10 Truck 8 Ft. Box(1981-86)
27=J-20 Truck 8 Ft. Box(1981-86)
15=Wagoneer 4 Dr.(1981-83)
75=Wagoneer 4WD-4 Dr.(1984-86)

BODY
CJ=CJ-5, CJ-6, CJ-7, CJ-8, Scrambler(1981-86)
MJ=Comanche Pickup(1986)

STYLES
SJ=Wagoneer(1981-83), Grand Wagoneer(1984-86), Cherokee(1981-83), J-10, J-20(1981-86)
XJ=Wagoneer(1984-86), Cherokee(1984-86)

AR = Use as Required - = Non Illustrated Part P.A.R. = Paint as Required

SERVOS, ACCUMULATOR AND VALVE BODY AUTOMATIC TRANSMISSION - A904, A999
Figure 21A-600

81J51 600

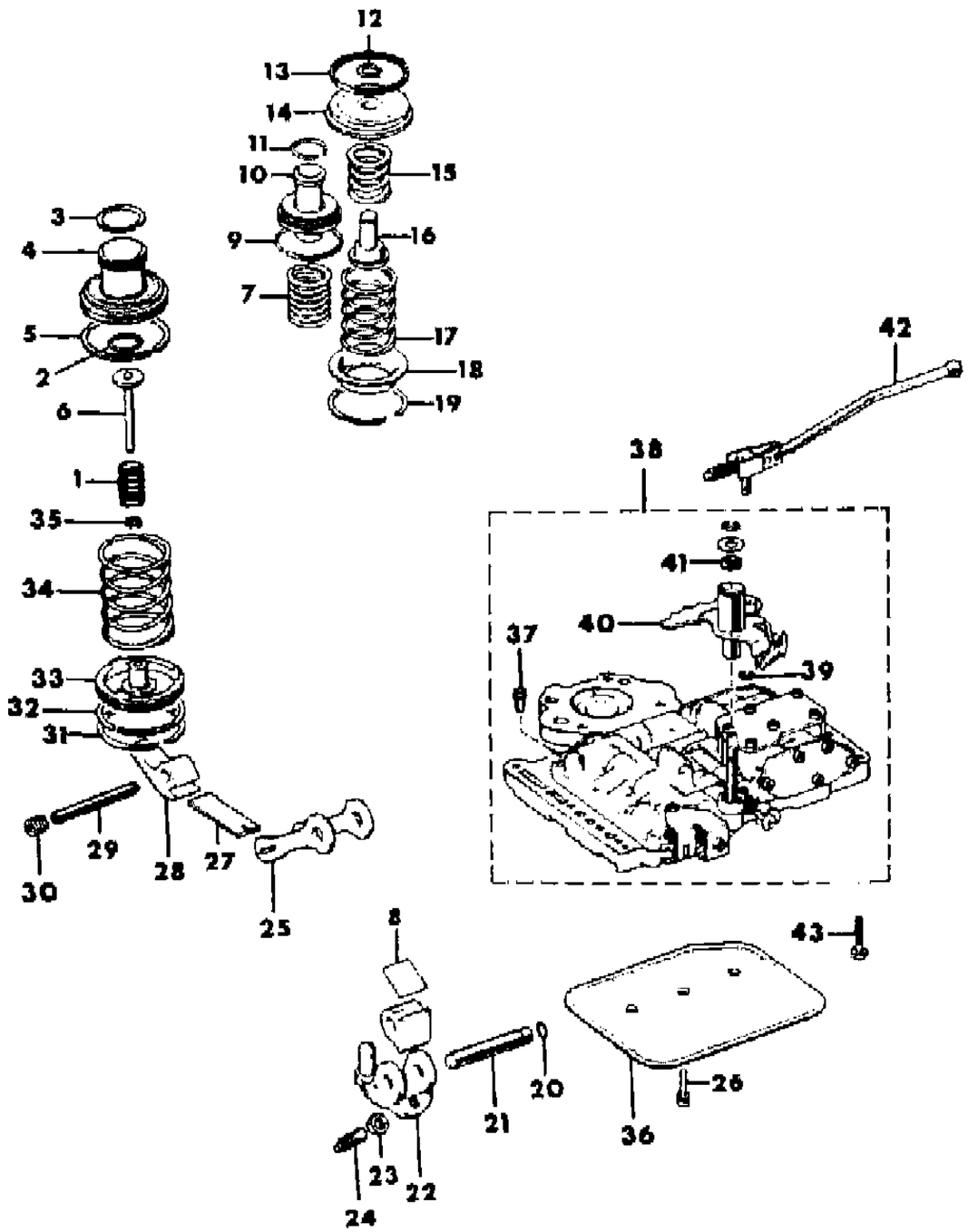

ITEM	PART NUMBER	QTY	BODY	MODEL	DESCRIPTION
	J813 0347	1	CJ		w/J3238778 Transmission
	J812 1088	1	CJ		w/o J3238778 Transmission
	J813 0347	1	XJ		1984-85: w/8953001141, 8953002430 Transmission
	J812 1109	1	XJ		1984-85: w/8953001334 Transmission
	J813 0347	1	XJ,MJ		1986
	J812 1088	1	SJ		
29	J812 1109	1			SHAFT
30	J812 1104	1			PLUG
31					SNAP RING, Kickdown Servo
	J812 1051	1	CJ		w/J3238778 Transmission
	J812 1052	1	CJ		w/o J3238778 Transmission
	J812 1051	1	XJ,MJ		
	J812 1052	1	SJ		
32					RING, Kickdown Servo Guide Seal, 2-3/8" O.D.
	J812 0969	1	CJ		w/J3238778 Transmission
	J812 0972	1	CJ		w/o J3238778 Transmission
	J812 0969	1	XJ,MJ		
	J812 0972	1	SJ		
33					GUIDE
	J812 1105	1	CJ		w/J3238778 Transmission
	J812 1106	1	CJ		w/o J3238778 Transmission
	J812 1105	1	XJ,MJ		
	J812 1106	1	SJ		
34					SPRING
	J813 0333	1	CJ		w/J3238778 Transmission
	J812 8991	1	CJ		w/J3238773, J3240219, J3241098, 33000917 Transmission
	J812 7837	1	CJ		w/J3240231, 33000913 Transmission
	J813 0333	1	XJ,MJ		
	J812 7837	1	SJ		w/8933000913 Transmission
	J812 8991	1	SJ		w/8933000917 Transmission
35					SNAP RING
	J813 0335	1	CJ		w/J3238778 Transmission
	J812 1050	1	CJ		w/o J3238778 Transmission
	J813 0335	1	XJ,MJ		
	J812 1050	1	SJ		
36					FILTER, Trans. Oil
	J812 7652	1	CJ,SJ		
	J812 3042	1	XJ,MJ		
37	J812 4863	1			FILTER, Regulator Valve

MODEL CODES

16=Cherokee 2 Dr.(1981-83)	78=Cherokee 4WD-4 Dr.(1984-86)	64=Comanche 2WD-6 Ft. Box(1986)	25=J-10 Truck 7 Ft. Box(1981-84)
17=Cherokee 2 Dr.(1981-83)	85=CJ-5 (1981-83)	66=Comanche 2WD-7 Ft. Box(1986)	26=J10 Truck 8 Ft. Box(1981-86)
73=Cherokee 2WD-2 Dr.(1984-86)	86=CJ-6(1981)	63=Comanche 4WD-6 Ft. Box(1986)	27=J-20 Truck 8 Ft. Box(1981-86)
74=Cherokee 2WD-4 Dr.(1984-86)	87=CJ-7(1981-86)	65=Comanche 4WD-7 Ft. Box(1986)	15=Wagoneer 4 Dr.(1981-83)
18=Cherokee 4 Dr.(1981-83)	88=CJ-8, Scrambler(1981-86)	15=Grand Wagoneer 4 Dr.(1984-86)	75=Wagoneer 4WD-4 Dr.(1984-86)
77=Cherokee 4WD-2 Dr.(1984-86)			

BODY
CJ=CJ-5, CJ-6, CJ-7, CJ-8, Scrambler(1981-86)
MJ=Comanche Pickup(1986)

STYLES
SJ=Wagoneer(1981-83), Grand Wagoneer(1984-86), Cherokee(1981-83), J-10, J-20(1981-86)
XJ=Wagoneer(1984-86), Cherokee(1984-86)

AR = Use as Required - = Non Illustrated Part P.A.R. = Paint as Required

SERVOS, ACCUMULATOR AND VALVE BODY AUTOMATIC TRANSMISSION - A904, A999
Figure 21A-600

81J51 600

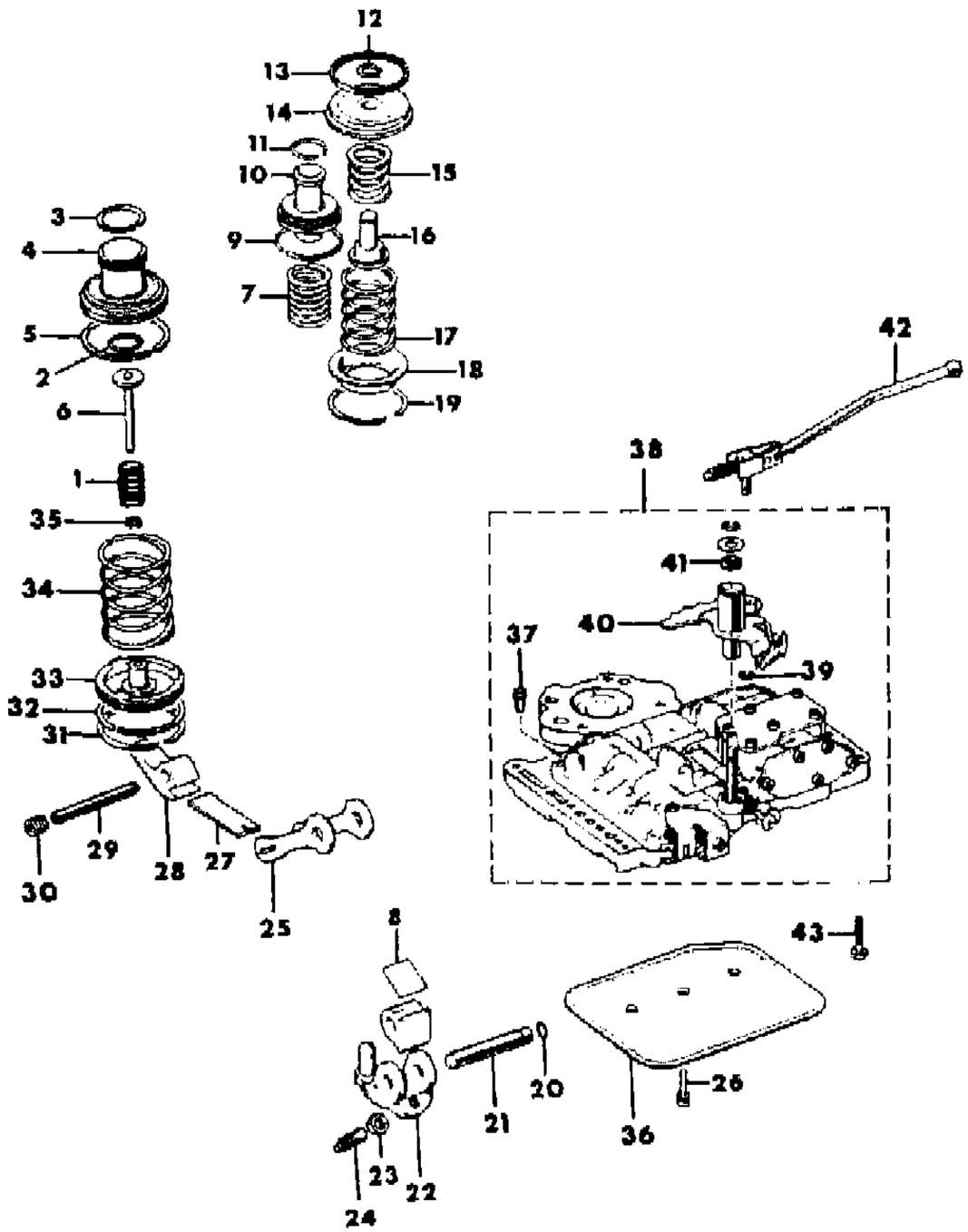

ITEM	PART NUMBER	QTY	BODY	MODEL	DESCRIPTION
38					VALVE, Control
	8350 1951	1	CJ		w/J3238778 Transmission
	J813 3401	1	CJ		w/J3238773 Transmission
	J813 3782	1	CJ		w/J3240219 Transmission
	J813 3860	1	CJ		w/J3240231, 33000913 Transmission
	8350 2737	1	CJ		w/J3241098, 33000917 Transmission
	8350 0427	1	XJ		1984-85: w/Gas Engine
	8350 1951	1	XJ		1984-85: w/Diesel Engine
	8350 0427	1	XJ,MJ		1986
	J813 3860	1	SJ		w/8933000913 Transmission
	J813 3861	1	SJ		w/8933000917 Transmission
39	J812 1239	1			E-RING, Retainer
40	J812 4070	1			LEVER
41	J812 4862	1			SEAL
42	J812 1163	1			ROD, Parking Sprag
43	J017 9798	10			BOLT

MODEL CODES

16=Cherokee 2 Dr.(1981-83)	78=Cherokee 4WD-4 Dr.(1984-86)	64=Comanche 2WD-6 Ft. Box(1986)	25=J-10 Truck 7 Ft. Box(1981-84)
17=Cherokee 2 Dr.(1981-83)	85=CJ-5 (1981-83)	66=Comanche 2WD-7 Ft. Box(1986)	26=J10 Truck 8 Ft. Box(1981-86)
73=Cherokee 2WD-2 Dr.(1984-86)	86=CJ-6(1981)	63=Comanche 4WD-6 Ft. Box(1986)	27=J-20 Truck 8 Ft. Box(1981-86)
74=Cherokee 2WD-4 Dr.(1984-86)	87=CJ-7(1981-86)	65=Comanche 4WD-7 Ft. Box(1986)	15=Wagoneer 4 Dr.(1981-83)
18=Cherokee 4 Dr.(1981-83)	88=CJ-8, Scrambler(1981-86)	15=Grand Wagoneer 4 Dr.(1984-86)	75=Wagoneer 4WD-4 Dr.(1984-86)
77=Cherokee 4WD-2 Dr.(1984-86)			

BODY
CJ=CJ-5, CJ-6, CJ-7, CJ-8, Scrambler(1981-86)
MJ=Comanche Pickup(1986)

STYLES
SJ=Wagoneer(1981-83), Grand Wagoneer(1984-86), Cherokee(1981-83), J-10, J-20(1981-86)
XJ=Wagoneer(1984-86), Cherokee(1984-86)

AR = Use as Required - = Non Illustrated Part P.A.R. = Paint as Required

« RETURN TO GROUP INDEX

CLUTCH, FRONT AND REAR AUTOMATIC TRANSMISSION - A904, A999
Figure 21A-700

81J51 700

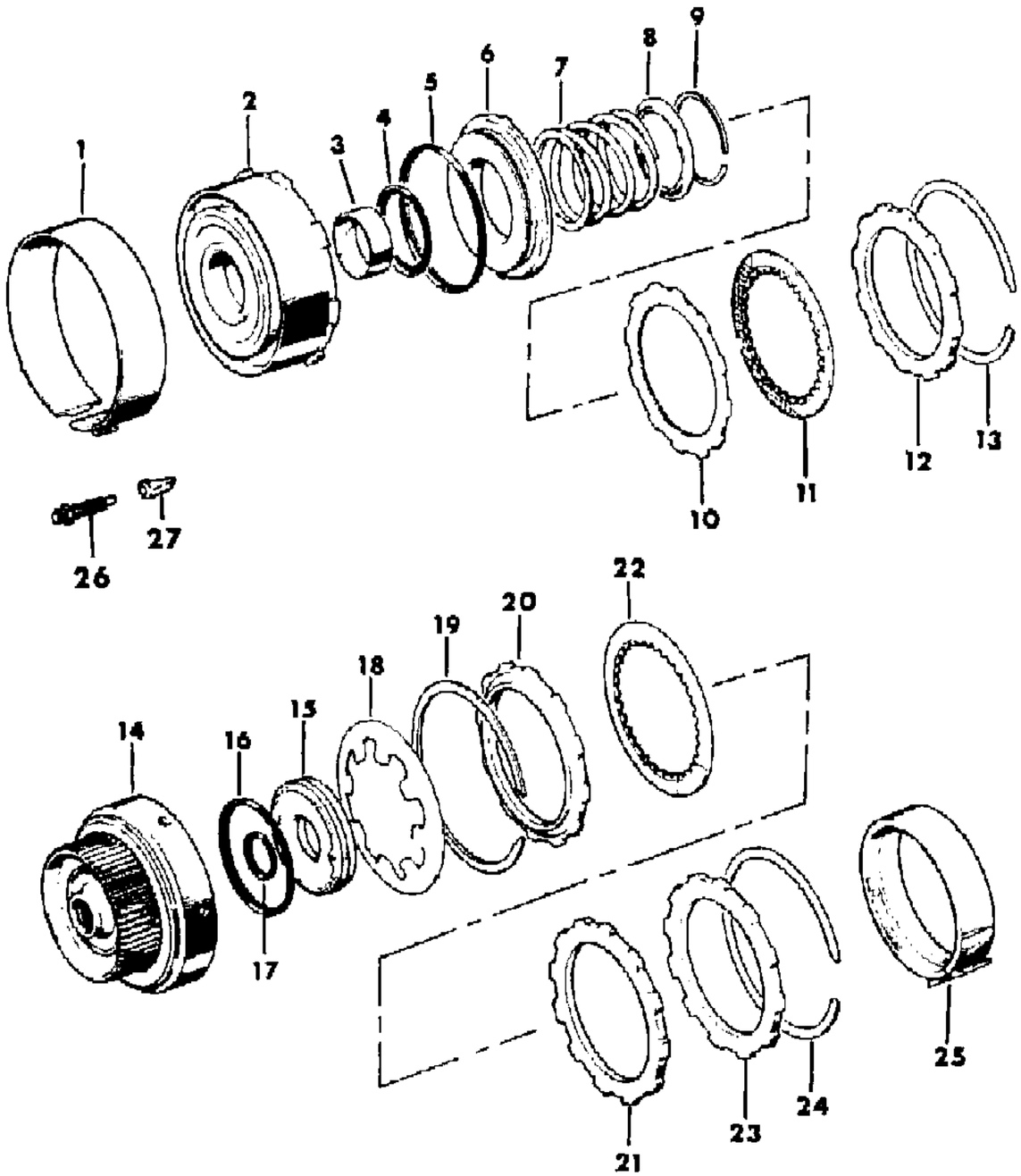

ITEM	PART NUMBER	QTY	BODY	MODEL	DESCRIPTION
1	J813 2494	1			BAND, Kickdown
2					RETAINER, Front Clutch
	J812 0943	1	CJ		w/J3238778 Transmission
	J813 2483	1	CJ		w/o J3238778 Transmission
	J812 0843	1	XJ		1984-85: w/8953001141, 8953002430 Transmission
	J812 0943	1	XJ		1984-85: w/8953001334 Transmission
	J812 0843	1	XJ,MJ		1986
	J813 2483	1	SJ		
3	J812 0896	1			BUSHING, Front Clutch
4	J812 0881	1			SEAL, Front Clutch Piston, Inner
5	J813 2510	1			SEAL, Front Clutch Piston, Outer
6					PISTON, Front Clutch
	J812 3447	1	CJ		w/J3238778 Transmission
	J813 2484	1	CJ		w/o J3238778 Transmission
	J812 3447	1	XJ,MJ		
	J813 2484	1	SJ		
7					SPRING
	J813 3387	1	CJ		w/J3238778 Transmission
	J812 0987	1	CJ		w/J3238773, J3240219 Transmission
	J812 6888	1	CJ		w/J3240231, J3241098, 33000913, 33000917 Transmission
	J812 6888	1	XJ,MJ		
	J812 6888	1	SJ		
8	J812 0885	1			RETAINER, Front Clutch Piston Spring
9	J812 0887	1			SNAP RING, Front Clutch Inner
10					PLATE, Front Clutch
	J813 6610	4	CJ		
	J812 0890	4	XJ,MJ		
	J812 0890	4	SJ		
11					DISC, Front Clutch Driven
	8350 1953	4	CJ		
	J812 0879	4	XJ,MJ		
	J812 0879	4	SJ		
12	J812 0932	1			PLATE, Pressure
13	J812 0894	1			SNAP RING, Front Clutch, Outer
14					RETAINER, Rear Clutch
	J813 2486	1	CJ		w/J3238778 Transmission
	J813 2485	1	CJ		w/o J3238778 Transmission
	J813 2485	1	XJ		1984-85: w/8953001141 Transmission
	J813 2486	1	XJ		1984-85: w/8953001334, 8953002430 Transmission

MODEL CODES

16=Cherokee 2 Dr.(1981-83)
17=Cherokee 2 Dr.(1981-83)
73=Cherokee 2WD-2 Dr.(1984-86)
74=Cherokee 2WD-4 Dr.(1984-86)
18=Cherokee 4 Dr.(1981-83)
77=Cherokee 4WD-2 Dr.(1984-86)
78=Cherokee 4WD-4 Dr.(1984-86)
85=CJ-5 (1981-83)
86=CJ-6(1981)
87=CJ-7(1981-86)
88=CJ-8, Scrambler(1981-86)
64=Comanche 2WD-6 Ft. Box(1986)
66=Comanche 2WD-7 Ft. Box(1986)
63=Comanche 4WD-6 Ft. Box(1986)
65=Comanche 4WD-7 Ft. Box(1986)
15=Grand Wagoneer 4 Dr.(1984-86)
25=J-10 Truck 7 Ft. Box(1981-84)
26=J10 Truck 8 Ft. Box(1981-86)
27=J-20 Truck 8 Ft. Box(1981-86)
15=Wagoneer 4 Dr.(1981-83)
75=Wagoneer 4WD-4 Dr.(1984-86)

BODY
CJ=CJ-5, CJ-6, CJ-7, CJ-8, Scrambler(1981-86)
MJ=Comanche Pickup(1986)

STYLES
SJ=Wagoneer(1981-83), Grand Wagoneer(1984-86), Cherokee(1981-83), J-10, J-20(1981-86)
XJ=Wagoneer(1984-86), Cherokee(1984-86)

AR = Use as Required - = Non Illustrated Part P.A.R. = Paint as Required

CLUTCH, FRONT AND REAR AUTOMATIC TRANSMISSION - A904, A999
Figure 21A-700

81J51 700

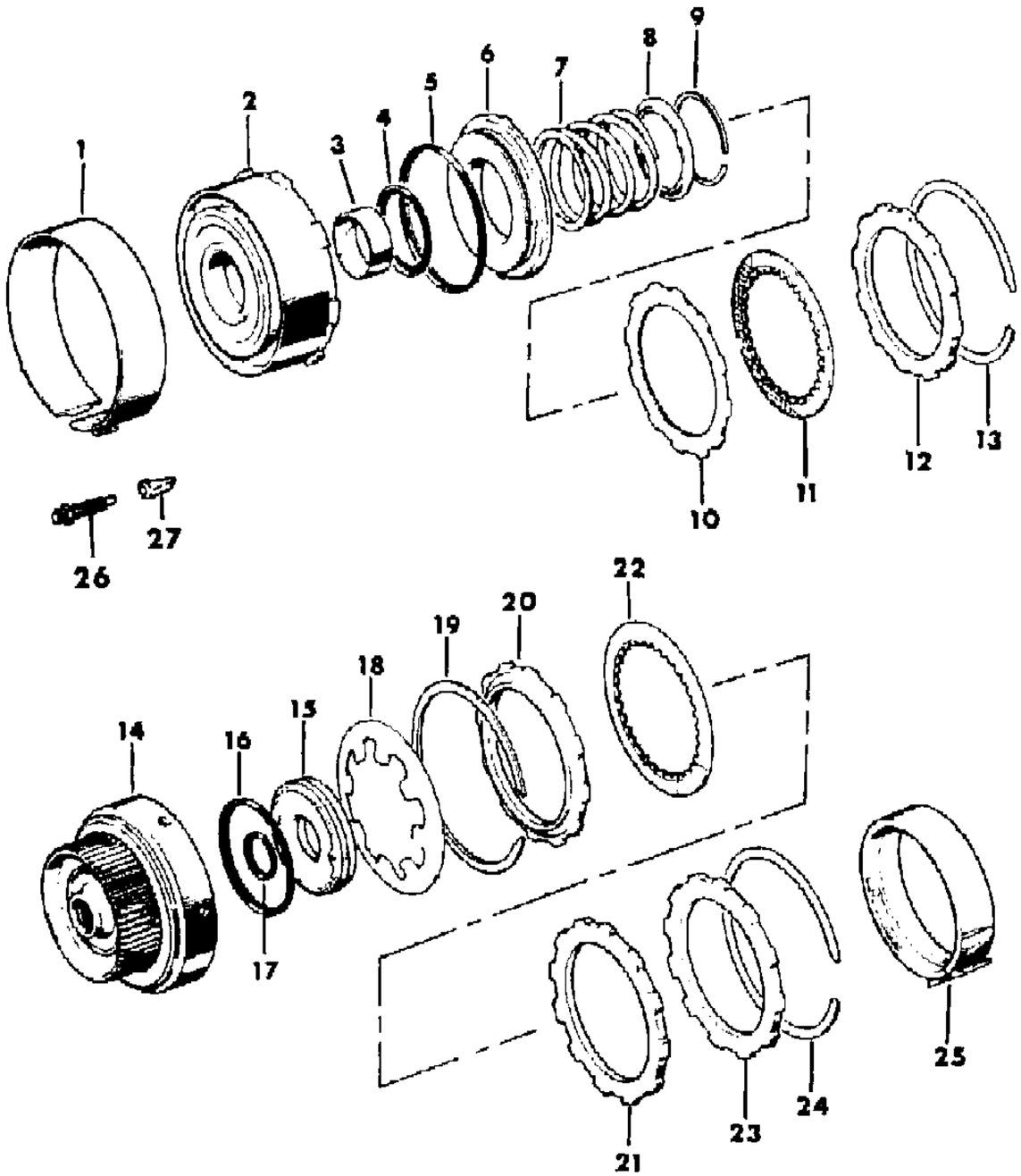

ITEM	PART NUMBER	QTY	BODY	MODEL	DESCRIPTION
	J813 2485	1	XJ,MJ		1986: w/8953002097 Transmission
	J813 2486	1	XJ,MJ		1986: w/8953001672 Transmission
	J813 2485	1	SJ		
15	J812 0912	1			PISTON ASSEMBLY, Rear Clutch
16	J812 0917	1			SEAL, Rear Clutch Piston Outer
17	J812 0915	1			SEAL, Rear Clutch Piston Inner
18	J812 0919	1			SPRING
19	J812 0922	1			SPRING, Clutch Wave
20	J812 0926	1			PLATE, Clutch
21	J812 0890	3			PLATE, Drive Rear Clutch
22					DISC, Driven
	J813 6610	4	CJ		
	J812 0928	4	XJ,MJ		
	J812 0928	4	SJ		
23	J812 0932	1			PLATE, Rear Clutch Pressure
24					SNAP RING, Rear Clutch Retaining, 5-11/32" O.D.
	J813 2487	AR			.060" Thick
	J813 2488	AR			.074" Thick
	J813 2489	AR			.098" Thick
25					BAND, Reverse
	8350 4128	1	CJ		w/J3238778 Transmission
	J813 2493	1	XJ,MJ		
	J813 2812	1	SJ		
26	J812 1085	1			SCREW, Kickdown Band Adjusting
27					NUT, Kickdown Band (Not Serviced)

MODEL CODES

16=Cherokee 2 Dr.(1981-83)
17=Cherokee 2 Dr.(1981-83)
73=Cherokee 2WD-2 Dr.(1984-86)
74=Cherokee 2WD-4 Dr.(1984-86)
18=Cherokee 4 Dr.(1981-83)
77=Cherokee 4WD-2 Dr.(1984-86)
78=Cherokee 4WD-4 Dr.(1984-86)
85=CJ-5 (1981-83)
86=CJ-6(1981)
87=CJ-7(1981-86)
88=CJ-8, Scrambler(1981-86)
64=Comanche 2WD-6 Ft. Box(1986)
66=Comanche 2WD-7 Ft. Box(1986)
63=Comanche 4WD-6 Ft. Box(1986)
65=Comanche 4WD-7 Ft. Box(1986)
15=Grand Wagoneer 4 Dr.(1984-86)
25=J-10 Truck 7 Ft. Box(1981-84)
26=J10 Truck 8 Ft. Box(1981-86)
27=J-20 Truck 8 Ft. Box(1981-86)
15=Wagoneer 4 Dr.(1981-83)
75=Wagoneer 4WD-4 Dr.(1984-86)

BODY
CJ=CJ-5, CJ-6, CJ-7, CJ-8, Scrambler(1981-86)
MJ=Comanche Pickup(1986)

STYLES
SJ=Wagoneer(1981-83), Grand Wagoneer(1984-86), Cherokee(1981-83), J-10, J-20(1981-86)
XJ=Wagoneer(1984-86), Cherokee(1984-86)

AR = Use as Required - = Non Illustrated Part P.A.R. = Paint as Required

« RETURN TO GROUP INDEX

CASE, ADAPTER & MISCELLANEOUS PARTS AUTOMATIC TRANSMISSION - A727
Figure 21A-800

81J51 800

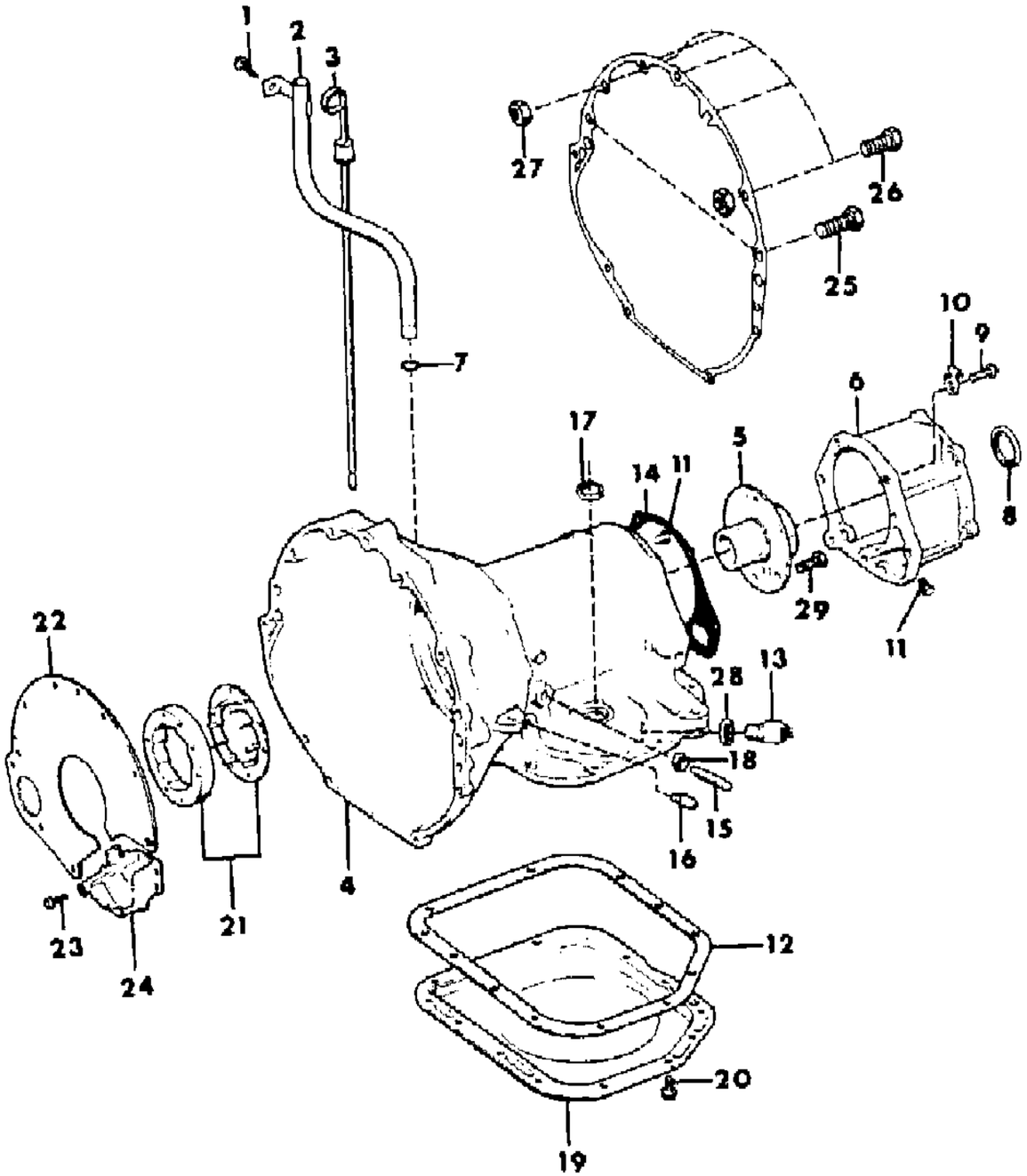

ITEM	PART NUMBER	QTY	BODY	MODEL	DESCRIPTION
1	J942 8638	1			BOLT
2					TUBE, Oil Indicator
	J536 0188	1			w/Six Cylinder Engine
	J536 1276	1			w/Eight Cylinder Engine
3	J536 3757	1			INDICATOR, Oil Level
4	J813 3385	1			CASE, Transmission
5	J812 0842	1			SUPPORT, Output Shaft
6	J813 4761	1			ADAPTER, Trans.
7	J321 2885	1			SEAL, Oil Indicator Tube
8					SEAL, Adapter
	J813 2504	1			1981-83
	J813 4680	1			1984-86
9	J813 2505	6			BOLT, Adapter
10	J812 1160	1			CLIP
11	J812 0840	4			PLUG, Pressure Check
12	J812 0984	1			GASKET, Oil Pan
13	J323 2844	1			SWITCH, Neutral Safety
14	J812 0979	1			GASKET, Adapter
15	J812 1086	1			SCREW, Band Adjusting
16	J813 2511	1			FITTING
17	J812 6794	1			SEAL
18		1			NUT, Screw Adjusting (Not Serviced)
19	J812 8965	1			PAN, Trans. Oil
20	J812 1145	14			SCREW, Oil Pan
21	J812 2438	1			CLUTCH PACKAGE, Overrunning
22	J321 3743	1			SPACER
23	J400 0987	2			SCREW, Cover, 5/16-18 x 5/8"
24	J321 3744	1			COVER
25	J400 4370	AR			BOLT, 7/16-14 x 2-2/4"
26	J400 1885	AR			BOLT, 3/8-16 x 2-1/8"
27	J021 9422	AR			NUT
28	J812 1142	1			SEAL, Switch
29	J018 0079	4			BOLT, Support

MODEL CODES
16=Cherokee 2 Dr.(1981-83)
17=Cherokee 2 Dr.(1981-83)
73=Cherokee 2WD-2 Dr.(1984-86)
74=Cherokee 2WD-4 Dr.(1984-86)
18=Cherokee 4 Dr.(1981-83)
77=Cherokee 4WD-2 Dr.(1984-86)
78=Cherokee 4WD-4 Dr.(1984-86)
85=CJ-5 (1981-83)
86=CJ-6(1981)
87=CJ-7(1981-86)
88=CJ-8, Scrambler(1981-86)
64=Comanche 2WD-6 Ft. Box(1986)
66=Comanche 2WD-7 Ft. Box(1986)
63=Comanche 4WD-6 Ft. Box(1986)
65=Comanche 4WD-7 Ft. Box(1986)
15=Grand Wagoneer 4 Dr.(1984-86)
25=J-10 Truck 7 Ft. Box(1981-84)
26=J10 Truck 8 Ft. Box(1981-86)
27=J-20 Truck 8 Ft. Box(1981-86)
15=Wagoneer 4 Dr.(1981-83)
75=Wagoneer 4WD-4 Dr.(1984-86)

BODY
CJ=CJ-5, CJ-6, CJ-7, CJ-8, Scrambler(1981-86)
MJ=Comanche Pickup(1986)

STYLES
SJ=Wagoneer(1981-83), Grand Wagoneer(1984-86), Cherokee(1981-83), J-10, J-20(1981-86)
XJ=Wagoneer(1984-86), Cherokee(1984-86)

AR = Use as Required - = Non Illustrated Part P.A.R. = Paint as Required

« RETURN TO GROUP INDEX

GASKET AND SEAL PACKAGE, REPAIR AUTOMATIC TRANSMISSION - A727
Figure 21A-900

81J51 900

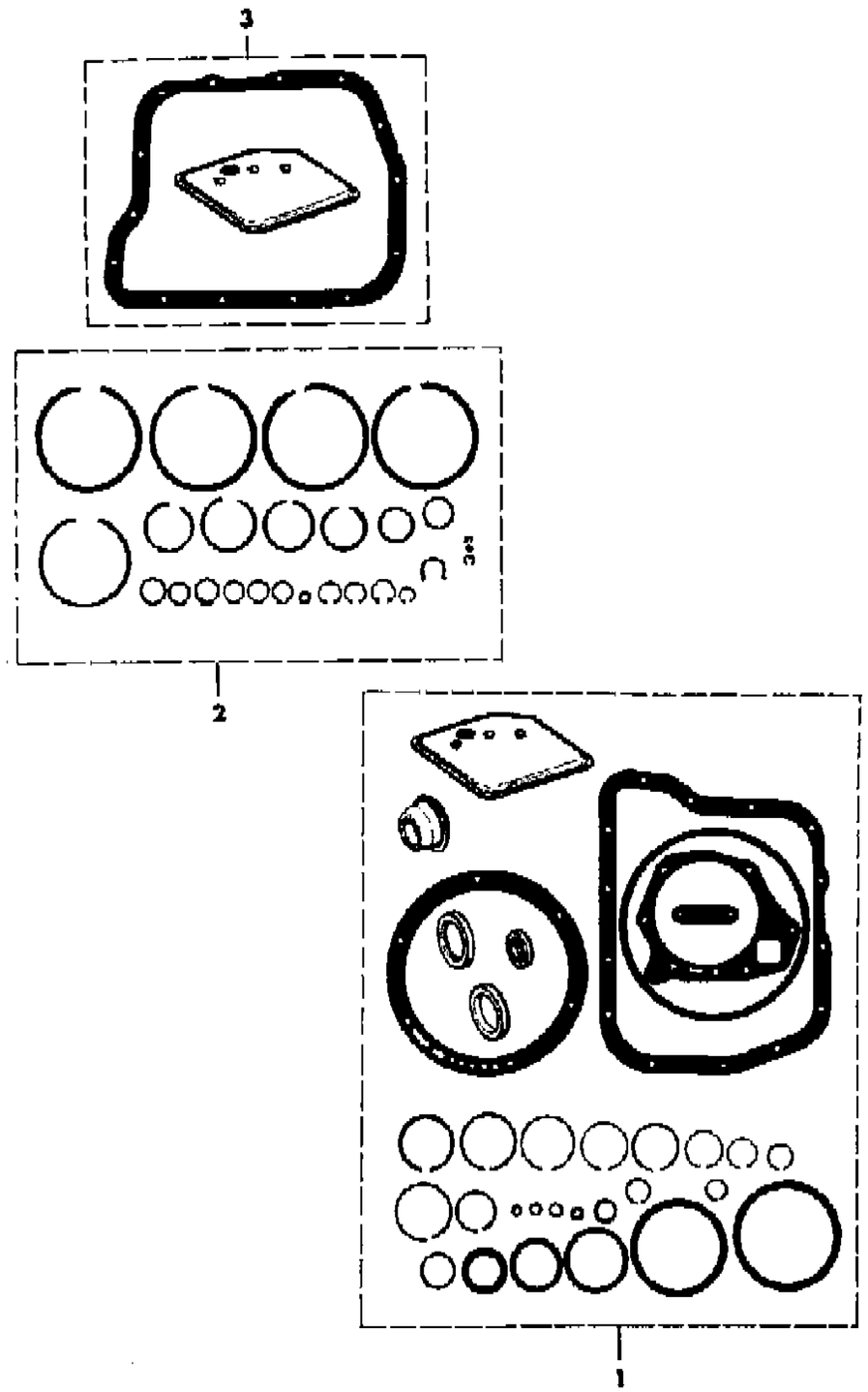

ITEM	PART NUMBER	QTY	BODY	MODEL	DESCRIPTION
1					GASKET PACKAGE, Transmission Overhaul
	J813 6607	1			1981-83
	J813 4763	1			1984-86
2	J813 0351	1			SNAP RING PACKAGE ***
3	J812 7652	1			FILTER PACKAGE ***

MODEL CODES

16=Cherokee 2 Dr.(1981-83)	78=Cherokee 4WD-4 Dr.(1984-86)	64=Comanche 2WD-6 Ft. Box(1986)	25=J-10 Truck 7 Ft. Box(1981-84)
17=Cherokee 2 Dr.(1981-83)	85=CJ-5 (1981-83)	66=Comanche 2WD-7 Ft. Box(1986)	26=J10 Truck 8 Ft. Box(1981-86)
73=Cherokee 2WD-2 Dr.(1984-86)	86=CJ-6(1981)	63=Comanche 4WD-6 Ft. Box(1986)	27=J-20 Truck 8 Ft. Box(1981-86)
74=Cherokee 2WD-4 Dr.(1984-86)	87=CJ-7(1981-86)	65=Comanche 4WD-7 Ft. Box(1986)	15=Wagoneer 4 Dr.(1981-83)
18=Cherokee 4 Dr.(1981-83)	88=CJ-8, Scrambler(1981-86)	15=Grand Wagoneer 4 Dr.(1984-86)	75=Wagoneer 4WD-4 Dr.(1984-86)
77=Cherokee 4WD-2 Dr.(1984-86)			

BODY
CJ=CJ-5, CJ-6, CJ-7, CJ-8, Scrambler(1981-86)
MJ=Comanche Pickup(1986)

STYLES
SJ=Wagoneer(1981-83), Grand Wagoneer(1984-86), Cherokee(1981-83), J-10, J-20(1981-86)
XJ=Wagoneer(1984-86), Cherokee(1984-86)

AR = Use as Required - = Non Illustrated Part P.A.R. = Paint as Required

« RETURN TO GROUP INDEX

OIL PUMP, GEAR TRAIN, OUTPUT SHAFT AUTOMATIC TRANSMISSION - A727
Figure 21A-1000

81J51 1000

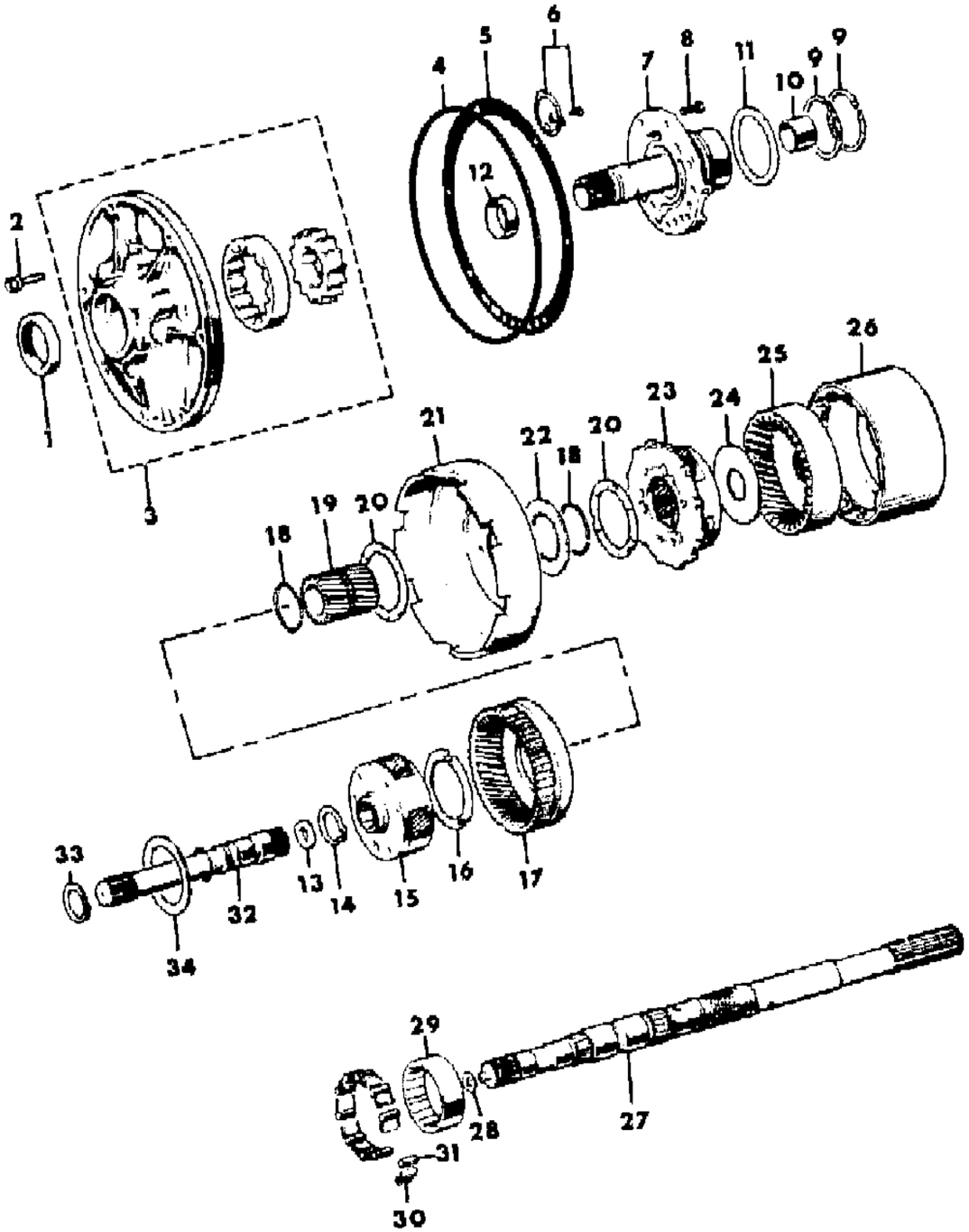

ITEM	PART NUMBER	QTY	BODY	MODEL	DESCRIPTION
1	J812 6792	1			SEAL, Pump Shaft
2	J812 0871	7			SCREW, w/Washer, Housing
3	J813 2482	1			PUMP ASSEMBLY, Transmission Oil
4	J812 0859	1			SEAL, Front Pump Housing
5	4028 377	1			GASKET
6	J812 0857	1			BAFFLE
7					SHAFT, w/Support Reaction
	J813 3386	1			w/J3238774, J3239817, 8983000914, 8983000915 Transmission
	J812 8973	1			w/J5359402, J3240255, 8983000918, 8953001836 Transmission
8	0179 815	6			BOLT, 5/16-18 x 11/16"
9	J812 0867	2			RING, Reaction Shaft Support Seal
10	J812 0865	1			BUSHING, Reaction Shaft, 1.30" O.D.
11					WASHER
	J812 0898	AR			.062"
	J812 0899	AR			.085"
	J812 0900	AR			.103"
12	J812 0855	1			BUSHING, Oil Pump Housing
13	J812 8983	1			WASHER
14					SNAP RING, Output Shaft
	J812 0914	AR			.048"
	J812 1005	AR			.055"
	J812 1007	AR			.062"
15	J812 6582	1			CARRIER ASSEMBLY, Front Planatery
16	J812 1072	2			WASHER, Front Carrier, Thrust
17	J812 1015	1			GEAR, Front Annulus
18	J812 1028	2			RING, Locking
19	J812 1285	1			GEAR, w/Bushing, Sun
20	J812 1072	1			WASHER
21	J812 1026	1			SHELL, Sun Gear
22	J812 1027	1			PLATE
23	J812 1070	1			CARRIER ASSEMBLY, Rear Planetary
24	J812 1076	1			PLATE
25	J812 1075	1			GEAR, Rear Annulus
26	J812 1080	1			DRUM, Reverse
27	J813 2491	1			SHAFT, Output
28	4428 222	1			WASHER, Thrust
29	3420 100	1			RACE PACKAGE, w/Rollers and Springs, "O" Running Clutch

MODEL CODES
16=Cherokee 2 Dr.(1981-83)
17=Cherokee 2 Dr.(1981-83)
73=Cherokee 2WD-2 Dr.(1984-86)
74=Cherokee 2WD-4 Dr.(1984-86)
18=Cherokee 4 Dr.(1981-83)
77=Cherokee 4WD-2 Dr.(1984-86)
78=Cherokee 4WD-4 Dr.(1984-86)
85=CJ-5 (1981-83)
86=CJ-6(1981)
87=CJ-7(1981-86)
88=CJ-8, Scrambler(1981-86)
64=Comanche 2WD-6 Ft. Box(1986)
66=Comanche 2WD-7 Ft. Box(1986)
63=Comanche 4WD-6 Ft. Box(1986)
65=Comanche 4WD-7 Ft. Box(1986)
15=Grand Wagoneer 4 Dr.(1984-86)
25=J-10 Truck 7 Ft. Box(1981-84)
26=J10 Truck 8 Ft. Box(1981-86)
27=J-20 Truck 8 Ft. Box(1981-86)
15=Wagoneer 4 Dr.(1981-83)
75=Wagoneer 4WD-4 Dr.(1984-86)

BODY
CJ=CJ-5, CJ-6, CJ-7, CJ-8, Scrambler(1981-86)
MJ=Comanche Pickup(1986)

STYLES
SJ=Wagoneer(1981-83), Grand Wagoneer(1984-86), Cherokee(1981-83), J-10, J-20(1981-86)
XJ=Wagoneer(1984-86), Cherokee(1984-86)

AR = Use as Required - = Non Illustrated Part P.A.R. = Paint as Required

« RETURN TO GROUP INDEX »

OIL PUMP, GEAR TRAIN, OUTPUT SHAFT AUTOMATIC TRANSMISSION - A727
Figure 21A-1000

81J51 1000

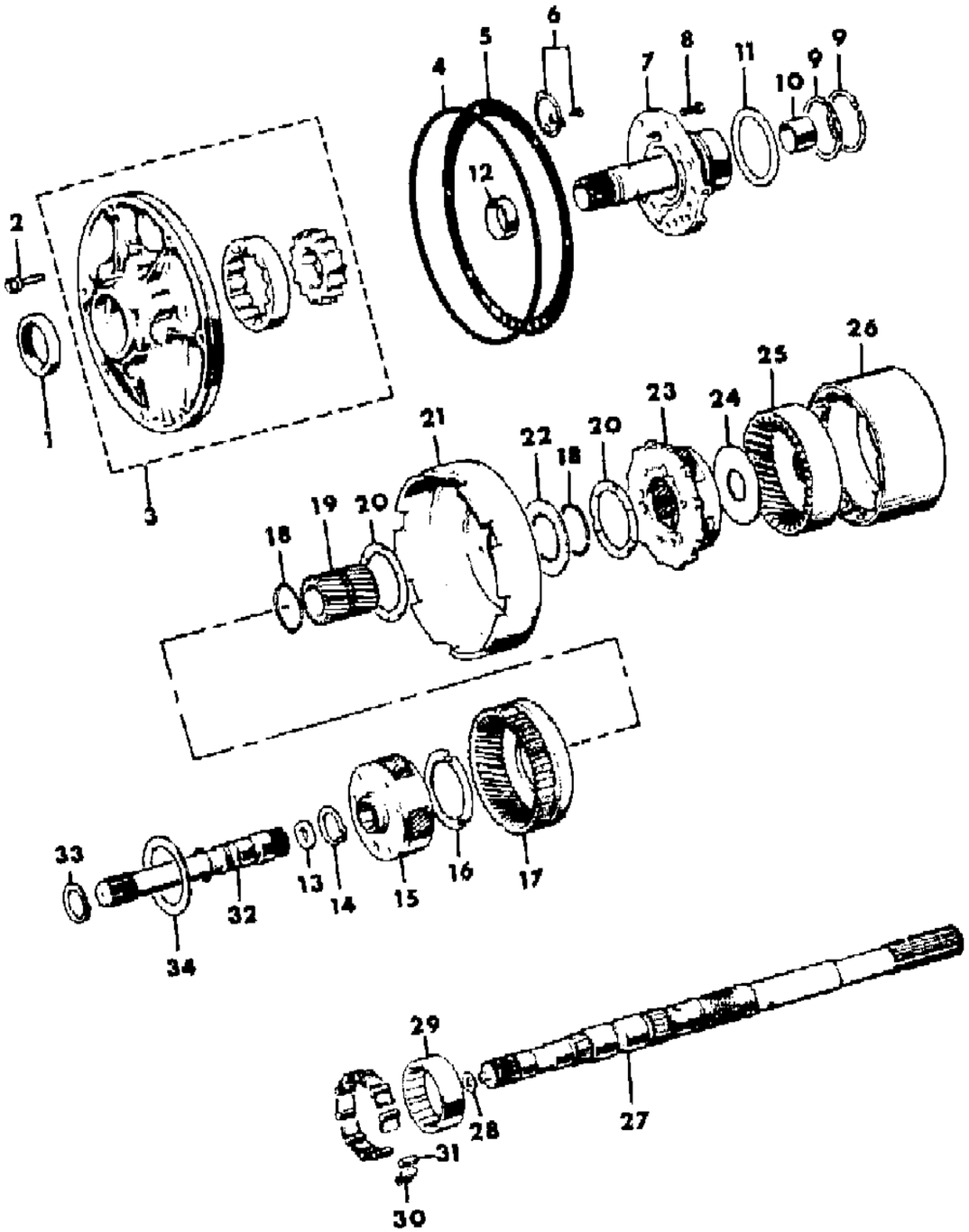

ITEM	PART NUMBER	QTY	BODY	MODEL	DESCRIPTION
30	J812 0846	12			SPRING, Clutch
31	J812 0848	12			ROLLER, Clutch
32					SHAFT, Input
	J813 3388	1			w/J3238774, J3239817, 8983000914, 8983000915 Transmission
	J812 8977	1			w/J5359402, J3240255, 8983000918, 8953001836 Transmission
33	J812 0908	1			SNAP RING, Rear Clutch Piston Retainer
34	J812 0898	1			WASHER

MODEL CODES

16=Cherokee 2 Dr.(1981-83)
17=Cherokee 2 Dr.(1981-83)
73=Cherokee 2WD-2 Dr.(1984-86)
74=Cherokee 2WD-4 Dr.(1984-86)
18=Cherokee 4 Dr.(1981-83)
77=Cherokee 4WD-2 Dr.(1984-86)
78=Cherokee 4WD-4 Dr.(1984-86)
85=CJ-5 (1981-83)
86=CJ-6(1981)
87=CJ-7(1981-86)
88=CJ-8, Scrambler(1981-86)
64=Comanche 2WD-6 Ft. Box(1986)
66=Comanche 2WD-7 Ft. Box(1986)
63=Comanche 4WD-6 Ft. Box(1986)
65=Comanche 4WD-7 Ft. Box(1986)
15=Grand Wagoneer 4 Dr.(1984-86)
25=J-10 Truck 7 Ft. Box(1981-84)
26=J10 Truck 8 Ft. Box(1981-86)
27=J-20 Truck 8 Ft. Box(1981-86)
15=Wagoneer 4 Dr.(1981-83)
75=Wagoneer 4WD-4 Dr.(1984-86)

BODY
CJ=CJ-5, CJ-6, CJ-7, CJ-8, Scrambler(1981-86)
MJ=Comanche Pickup(1986)

STYLES
SJ=Wagoneer(1981-83), Grand Wagoneer(1984-86), Cherokee(1981-83), J-10, J-20(1981-86)
XJ=Wagoneer(1984-86), Cherokee(1984-86)

AR = Use as Required - = Non Illustrated Part P.A.R. = Paint as Required

« RETURN TO GROUP INDEX

GOVERNOR CONTROL AUTOMATIC TRANSMISSION - A727
Figure 21A-1100

81J51 1100

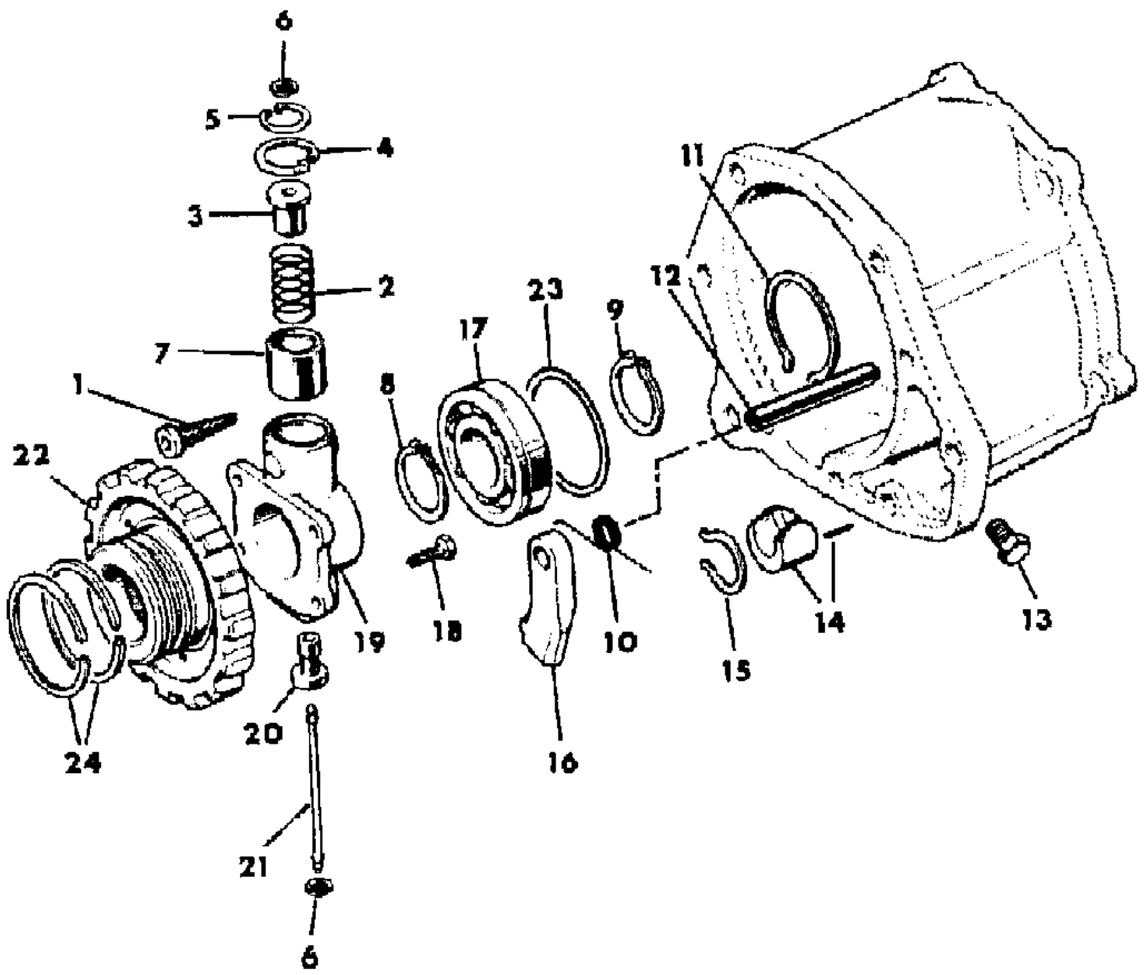

ITEM	PART NUMBER	QTY	BODY	MODEL	DESCRIPTION
1	J812 4464	1			FILTER, Governor
2	J813 2498	1			SPRING
3	J812 1130	1			WEIGHT
4	J813 0335	1			SNAP RING
5	J812 1058	1			SNAP RING
6	J812 1059	2			SNAP RING
7	J813 2497	1			WEIGHT, Governor
8	J812 1057	1			SNAP RING
9	6025 570	1			SNAP RING
10	J812 1158	1			SPRING
11	J812 1062	1			SNAP RING
12	J812 1159	1			SHAFT, Park Sprag
13	J812 0840	4			PLUG, Pressure Check
14	J812 1185	1			PLUG
15	2538 034	1			SNAP RING
16	J812 1157	1			SPRAG, Park
17	J812 1078	1			BEARING, Output Shaft
18	6031 613	4			BOLT, Governor Body
19	J813 2496	1			BODY, Governor
20	J812 1149	1			VALVE, Governor
21	J812 1150	1			SHAFT, Governor
22	J812 4498	1			SUPPORT, Governor
23					O-RING, Bearing
	8350 1961	1			w/8933000918, 8953001836 Transmission
24	J812 0976	2			SEAL, Support

MODEL CODES

16=Cherokee 2 Dr.(1981-83)
17=Cherokee 2 Dr.(1981-83)
73=Cherokee 2WD-2 Dr.(1984-86)
74=Cherokee 2WD-4 Dr.(1984-86)
18=Cherokee 4 Dr.(1981-83)
77=Cherokee 4WD-2 Dr.(1984-86)
78=Cherokee 4WD-4 Dr.(1984-86)
85=CJ-5 (1981-83)
86=CJ-6(1981)
87=CJ-7(1981-86)
88=CJ-8, Scrambler(1981-86)
64=Comanche 2WD-6 Ft. Box(1986)
66=Comanche 2WD-7 Ft. Box(1986)
63=Comanche 4WD-6 Ft. Box(1986)
65=Comanche 4WD-7 Ft. Box(1986)
15=Grand Wagoneer 4 Dr.(1984-86)
25=J-10 Truck 7 Ft. Box(1981-84)
26=J10 Truck 8 Ft. Box(1981-86)
27=J-20 Truck 8 Ft. Box(1981-86)
15=Wagoneer 4 Dr.(1981-83)
75=Wagoneer 4WD-4 Dr.(1984-86)

BODY
CJ=CJ-5, CJ-6, CJ-7, CJ-8, Scrambler(1981-86)
MJ=Comanche Pickup(1986)

STYLES
SJ=Wagoneer(1981-83), Grand Wagoneer(1984-86), Cherokee(1981-83), J-10, J-20(1981-86)
XJ=Wagoneer(1984-86), Cherokee(1984-86)

AR = Use as Required - = Non Illustrated Part P.A.R. = Paint as Required

« RETURN TO GROUP INDEX

SERVOS, ACCUMULATOR AND VALVE BODY AUTOMATIC TRANSMISSION - A727
Figure 21A-1200

81J51 1200

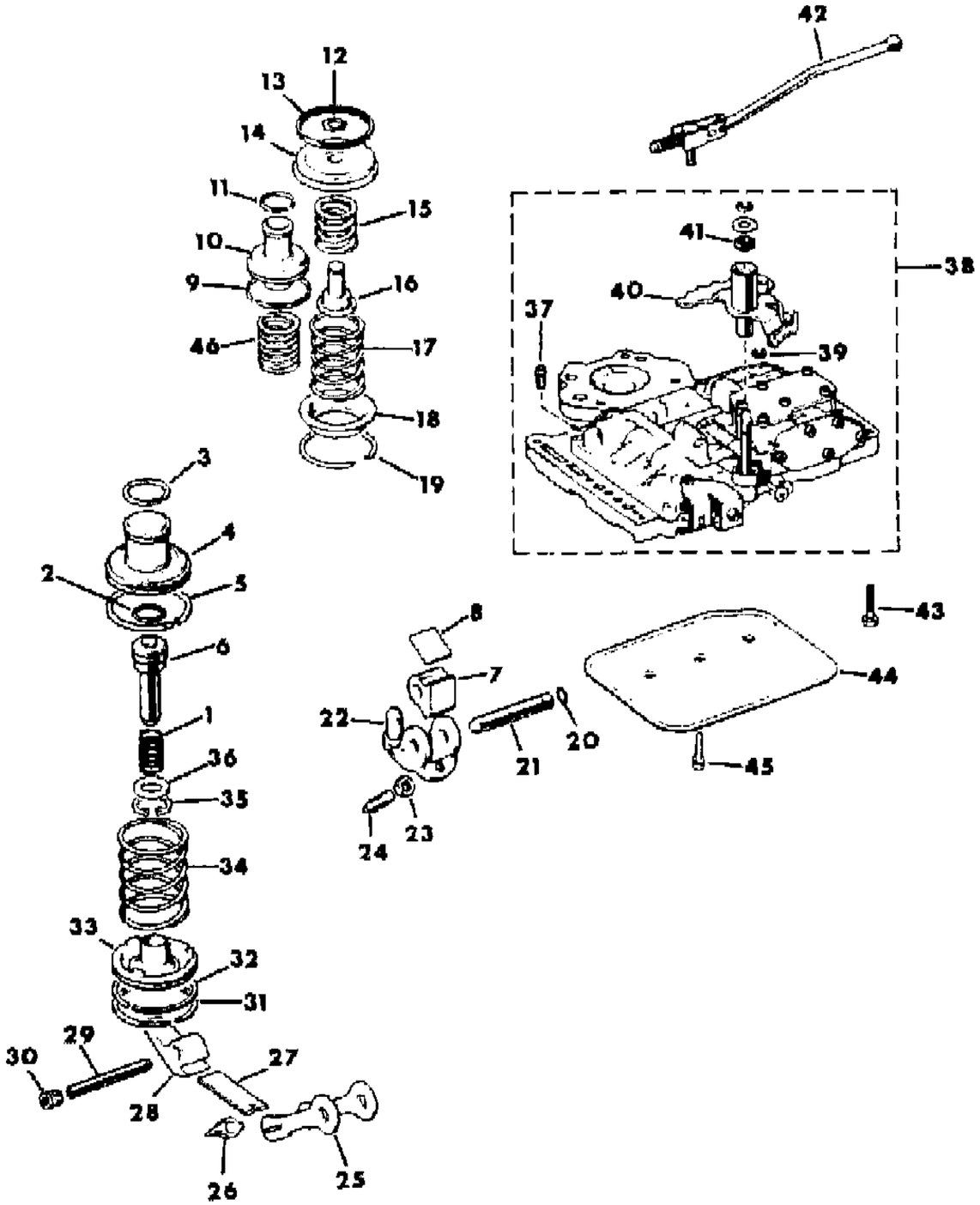

ITEM	PART NUMBER	QTY	BODY	MODEL	DESCRIPTION
1	J812 1096	1			SPRING
2	J812 4870	1			SEAL
3	J812 0987	1			RING, Kickdown Servo Piston Seal, Small
4	J812 1094	1			PISTON, Kickdown Servo
5	J812 0988	1			RING, Seal
6	J812 1095	1			ROD, Kickdown Servo
7	J812 1191	1			LEVER, Kickdown Servo
8	J812 1122	1			STRUT, Reverse Band
9	J812 0982	1			RING, Accumulator Seal
10	J812 1054	1			PISTON, Accumulator
11	J812 6786	1			RING, Accumulator Piston Seal, Small
12	J812 1174	1			RING
13	J812 9044	1			SEAL, Reverse Servo Piston
14	J812 1181	1			PISTON, Reverse Servo
15	J812 4581	1			SPRING, Reverse Servo Cushion
16	J812 4497	1			PLUG
17	J812 1173	1			SPRING, Reverse Servo Piston
18	J812 1171	1			RETAINER
19	J812 1055	1			SNAP RING, Spring Retainer
20	J812 0990	1			SEAL, Reverse Band Shaft
21	J812 1184	1			SHAFT, Band Lever
22	J812 1194	1			LEVER, Reverse Band
23	0271 506	1			NUT, Adj. Screw Lock, 7/16-20
24	J812 1189	1			SCREW, Reverse Band Adjusting
25	J812 1120	1			LINK, Reverse Band
26	J812 4775	1			ANCHOR, Kickdown Band
27	J812 1103	1			STRUT, Kickdown Band
28	J812 1090	1			LEVER
29	J812 1109	1			SHAFT
30	J812 1104	1			PLUG
31	J812 1055	1			SNAP RING
32	J812 0988	1			RING, Kickdown Servo Piston Seal
33	J812 1107	1			GUIDE
34	J812 1101	1			SPRING
35	J812 1050	1			SNAP RING
36	J812 1097	1			RETAINER
37	J812 4863	1			FILTER
38					VALVE ASSEMBLY, Body
	J813 3403	1			w/J3238774, 8933000915 Transmission

MODEL CODES
16=Cherokee 2 Dr.(1981-83)
17=Cherokee 2 Dr.(1981-83)
73=Cherokee 2WD-2 Dr.(1984-86)
74=Cherokee 2WD-4 Dr.(1984-86)
18=Cherokee 4 Dr.(1981-83)
77=Cherokee 4WD-2 Dr.(1984-86)
78=Cherokee 4WD-4 Dr.(1984-86)
85=CJ-5 (1981-83)
86=CJ-6(1981)
87=CJ-7(1981-86)
88=CJ-8, Scrambler(1981-86)
64=Comanche 2WD-6 Ft. Box(1986)
66=Comanche 2WD-7 Ft. Box(1986)
63=Comanche 4WD-6 Ft. Box(1986)
65=Comanche 4WD-7 Ft. Box(1986)
15=Grand Wagoneer 4 Dr.(1984-86)
25=J-10 Truck 7 Ft. Box(1981-84)
26=J10 Truck 8 Ft. Box(1981-86)
27=J-20 Truck 8 Ft. Box(1981-86)
15=Wagoneer 4 Dr.(1981-83)
75=Wagoneer 4WD-4 Dr.(1984-86)

BODY
CJ=CJ-5, CJ-6, CJ-7, CJ-8, Scrambler(1981-86)
MJ=Comanche Pickup(1986)

STYLES
SJ=Wagoneer(1981-83), Grand Wagoneer(1984-86), Cherokee(1981-83), J-10, J-20(1981-86)
XJ=Wagoneer(1984-86), Cherokee(1984-86)

AR = Use as Required - = Non Illustrated Part P.A.R. = Paint as Required

SERVOS, ACCUMULATOR AND VALVE BODY AUTOMATIC TRANSMISSION - A727
Figure 21A-1200

81J51 1200

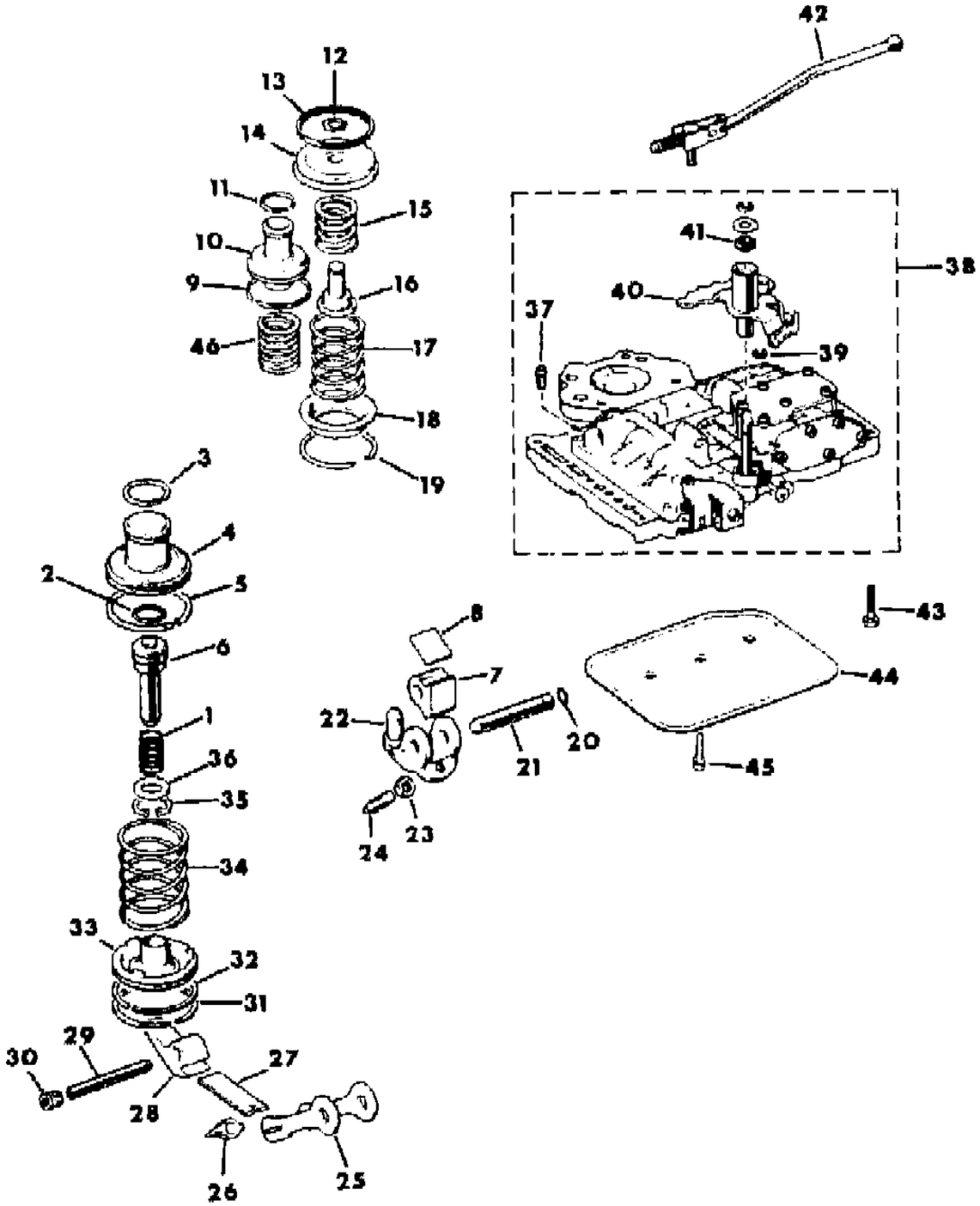

ITEM	PART NUMBER	QTY	BODY	MODEL	DESCRIPTION
	J813 3404	1			w/J3239817, 8933000914 Transmission
	J813 2507	1			w/J5359402 Transmission
	8350 2738	1			w/J3240255, 8933000918, 8953001836 Transmission
39	J812 1239	1			E-RING
40	J812 4070	1			LEVER
41	J812 4862	1			SEAL
42	J812 1164	1			ROD
43	J017 9798	10			BOLT
44	J812 7652	1			FILTER, Valve Body
45	J812 6893	3			SCREW
46					SPRING
	J812 1141	1			w/J3238774, 8933000914, 8933000915, J3239817 Transmission
	J813 2508	1			w/J3240255, 8933000918, 8953001836, J5359402 Transmission

MODEL CODES

16=Cherokee 2 Dr.(1981-83)
17=Cherokee 2 Dr.(1981-83)
73=Cherokee 2WD-2 Dr.(1984-86)
74=Cherokee 2WD-4 Dr.(1984-86)
18=Cherokee 4 Dr.(1981-83)
77=Cherokee 4WD-2 Dr.(1984-86)
78=Cherokee 4WD-4 Dr.(1984-86)
85=CJ-5 (1981-83)
86=CJ-6(1981)
87=CJ-7(1981-86)
88=CJ-8, Scrambler(1981-86)
64=Comanche 2WD-6 Ft. Box(1986)
66=Comanche 2WD-7 Ft. Box(1986)
63=Comanche 4WD-6 Ft. Box(1986)
65=Comanche 4WD-7 Ft. Box(1986)
15=Grand Wagoneer 4 Dr.(1984-86)
25=J-10 Truck 7 Ft. Box(1981-84)
26=J10 Truck 8 Ft. Box(1981-86)
27=J-20 Truck 8 Ft. Box(1981-86)
15=Wagoneer 4 Dr.(1981-83)
75=Wagoneer 4WD-4 Dr.(1984-86)

BODY
CJ=CJ-5, CJ-6, CJ-7, CJ-8, Scrambler(1981-86)
MJ=Comanche Pickup(1986)

STYLES
SJ=Wagoneer(1981-83), Grand Wagoneer(1984-86), Cherokee(1981-83), J-10, J-20(1981-86)
XJ=Wagoneer(1984-86), Cherokee(1984-86)

AR = Use as Required - = Non Illustrated Part P.A.R. = Paint as Required

« RETURN TO GROUP INDEX

CLUTCH, FRONT AND REAR AUTOMATIC TRANSMISSION - A727
Figure 21A-1300

81J51 1300

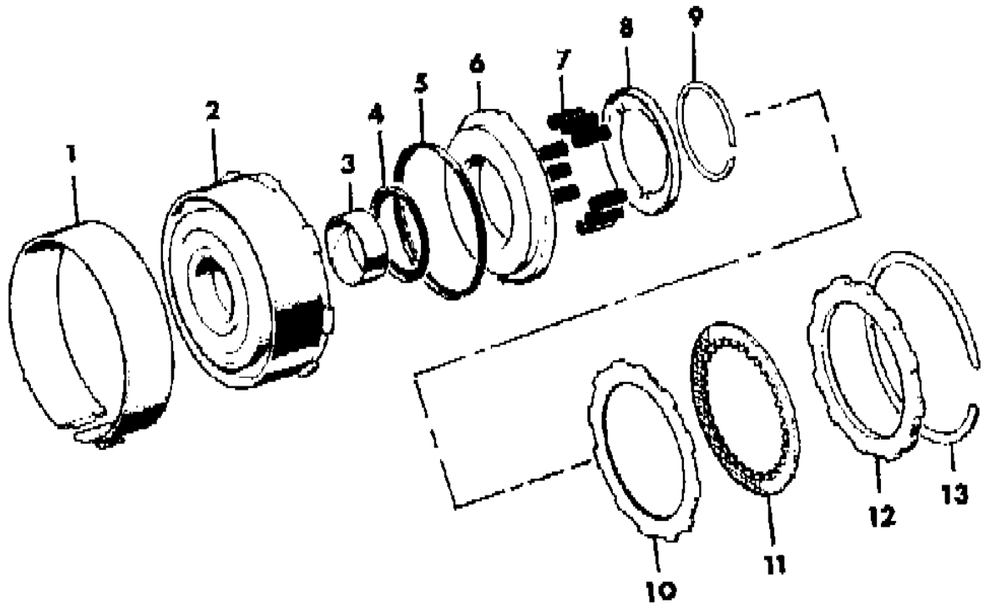

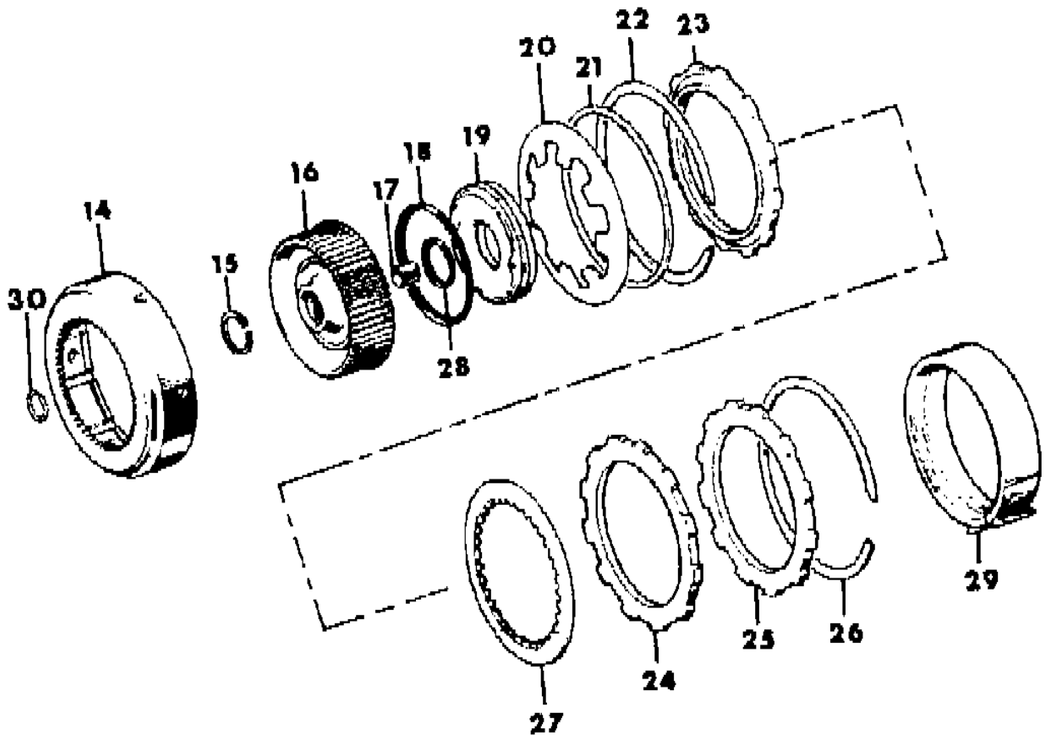

ITEM	PART NUMBER	QTY	BODY	MODEL	DESCRIPTION
1	8350 1956	1			BAND, Kickdown
2					RETAINER, Front Clutch
	J812 8968	1			3 Disc, w/J3240255, J5359402, 33000918, 53001836 Transmission
	J812 8969	1			4 Disc, w/J3238774, J3239817, 33000914, 33000915 Transmission
3	J812 8970	1			BUSHING, Retainer
4	J812 0882	1			SEAL, Front Clutch Piston, Inner
5	J812 0884	1			SEAL, Front Clutch Piston, Outer
6	J812 0880	1			PISTON, Front Clutch
7	J812 0966	11			SPRING, Front Clutch Piston
8	J812 0886	1			RETAINER, Piston Spring
9	J812 0888	1			SNAP RING, Piston Spring Retaining
10	J813 6611	4			PLATE, Front Clutch
11	8350 1955	4			DISC, Front Clutch
12	J812 0933	1			PLATE, Pressure
13	3410 570	1			SNAP RING, Front Clutch, .050" Thick, 7-8/64" O.D.
14	J812 4733	1			RETAINER, Rear Clutch
15	J812 8982	1			RING, Rear Clutch Piston Retainer Seal
16	J812 8980	1			RETAINER, Rear Clutch Piston
17	J812 3200	1			BUSHING, Rear Retainer
18	J812 0918	1			SEAL, Rear Clutch Piston, Outer
19	J812 4732	1			PISTON, Rear Clutch
20	J812 4734	1			SPRING, Rear Clutch Piston
21	J812 1155	1			SPACER
22	J812 0924	1			SPRING, Rear Clutch Wave
23	J812 0927	1			PLATE, Rear Clutch Pressure, Front
24	J813 6611	3			PLATE, Drive
25	J812 0933	1			PLATE, Rear Clutch Reaction
26					SNAP RING, Rear Clutch Retainer, 7" O.D.
	J812 0935	AR			.060" Thick
	J812 0937	AR			.074" Thick
	J812 0939	AR			.098" Thick
	J812 0940	AR			.106" Thick
27	J812 0929	4			DISC, Driven
28	J812 0916	1			SEAL, Rear Clutch Piston, Inner
29	J812 0090	1			BAND, Reverse
30	J812 0911	1			RING, Input Shaft Seal

MODEL CODES

16=Cherokee 2 Dr.(1981-83)
17=Cherokee 2 Dr.(1981-83)
73=Cherokee 2WD-2 Dr.(1984-86)
74=Cherokee 2WD-4 Dr.(1984-86)
18=Cherokee 4 Dr.(1981-83)
77=Cherokee 4WD-2 Dr.(1984-86)
78=Cherokee 4WD-4 Dr.(1984-86)
85=CJ-5 (1981-83)
86=CJ-6(1981)
87=CJ-7(1981-86)
88=CJ-8, Scrambler(1981-86)
64=Comanche 2WD-6 Ft. Box(1986)
66=Comanche 2WD-7 Ft. Box(1986)
63=Comanche 4WD-6 Ft. Box(1986)
65=Comanche 4WD-7 Ft. Box(1986)
15=Grand Wagoneer 4 Dr.(1984-86)
25=J-10 Truck 7 Ft. Box(1981-84)
26=J10 Truck 8 Ft. Box(1981-86)
27=J-20 Truck 8 Ft. Box(1981-86)
15=Wagoneer 4 Dr.(1981-83)
75=Wagoneer 4WD-4 Dr.(1984-86)

BODY
CJ=CJ-5, CJ-6, CJ-7, CJ-8, Scrambler(1981-86)
MJ=Comanche Pickup(1986)

STYLES
SJ=Wagoneer(1981-83), Grand Wagoneer(1984-86), Cherokee(1981-83), J-10, J-20(1981-86)
XJ=Wagoneer(1984-86), Cherokee(1984-86)

AR = Use as Required - = Non Illustrated Part P.A.R. = Paint as Required

« RETURN TO GROUP INDEX

CONTROLS, SHIFT, LOWER, COLUMN AUTOMATIC TRANSMISSION CJ-5,6,7,8 SCRAMBLER
Figure 21A-1400

81J51 1400

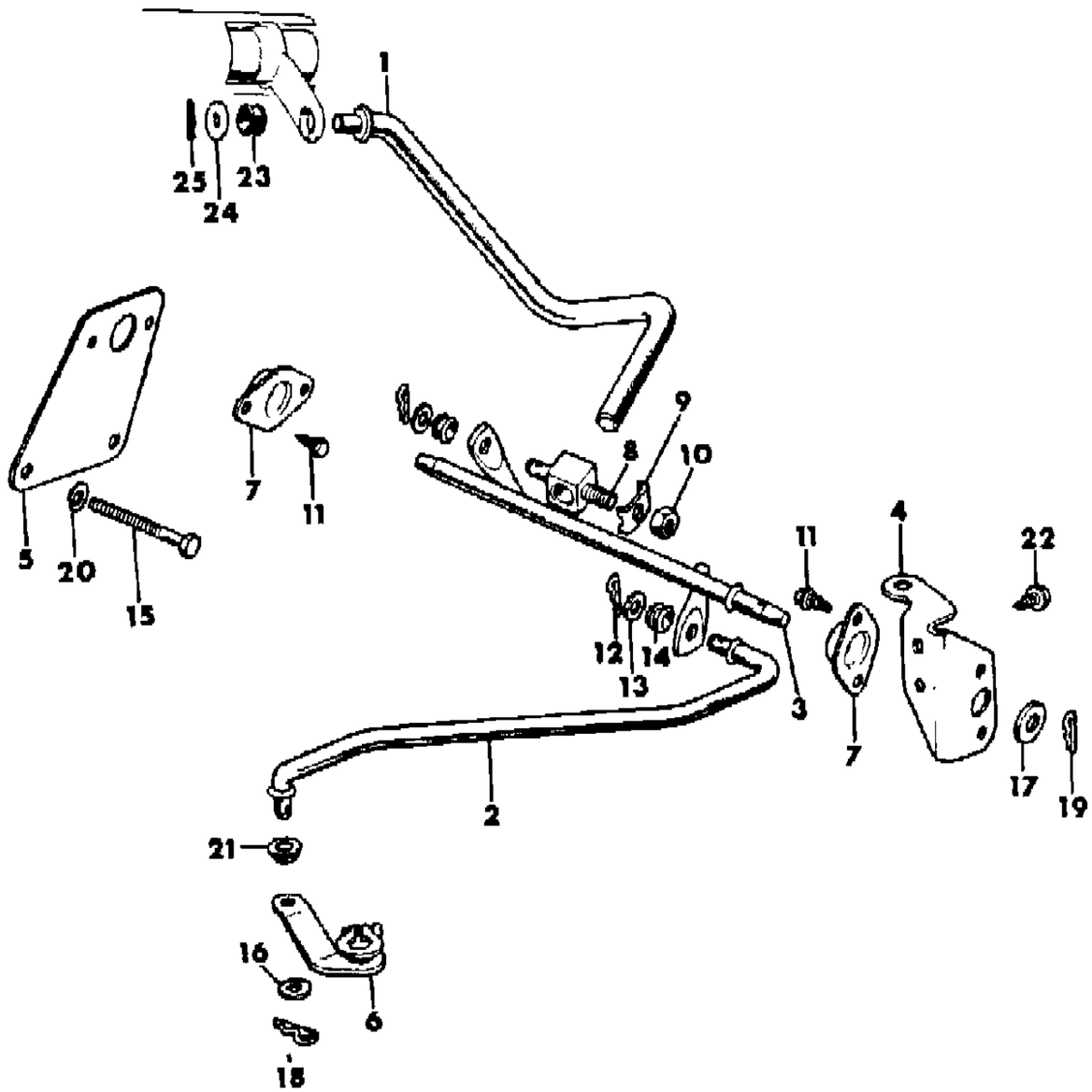

ITEM	PART NUMBER	QTY	BODY	MODEL	DESCRIPTION
1					ROD, Shift, Upper
	J536 2510	1			w/Four Cylinder Engine
	J536 1925	1			w/Six, Eight Cylinder Engine
2					ROD, Shift, Lower
	J536 2509	1			1981: w/Four Cylinder Engine
	J536 1054	1			1981: w/Six, Eight Cylinder Engine
	J536 3105	1			1982
3					BELLCRANK
	J536 2526	1			w/Four Cylinder Engine
	J536 1050	1			1981: w/Six, Eight Cylinder Engine
	J536 3347	1			1982-86: w/Six Cylinder Engine
4					BRACKET
	J536 1052	1			1981-82
	J536 4451	1			1983-86
5					PLATE
	J536 2506	1			w/Four Cylinder Engine
	J536 1053	1			w/Six Cylinder Engine
6					LEVER, on Trans., Shift
	J536 0152	1			1981
	J536 3106	1			1982-86
7	J535 2589	1			BEARING, BellCrank
8					TRUNNION ***
	J536 1924	1			Left Hand Drive
	J323 4756	1			Right Hand Drive
9	J094 8180	1			CLIP
10	J941 6531	1			NUT
11	J942 6241	4			SCREW
12	J400 4295	AR			PIN, Hitch
13	J400 1091	AR			WASHER
14	J321 2549	AR			GROMMET
15	J400 6830	2			SCREW
16	J400 1085	AR			WASHER
17	J012 0388	AR			WASHER
18	J400 5122	1			PIN, Hitch
19					PIN, Hitch
	J400 6486	1			1981
	J400 4295	1			1982-86
20	J400 4863	1			WASHER
21					BUSHING

MODEL CODES

16=Cherokee 2 Dr.(1981-83)
17=Cherokee 2 Dr.(1981-83)
73=Cherokee 2WD-2 Dr.(1984-86)
74=Cherokee 2WD-4 Dr.(1984-86)
18=Cherokee 4 Dr.(1981-83)
77=Cherokee 4WD-2 Dr.(1984-86)
78=Cherokee 4WD-4 Dr.(1984-86)
85=CJ-5 (1981-83)
86=CJ-6(1981)
87=CJ-7(1981-86)
88=CJ-8, Scrambler(1981-86)
64=Comanche 2WD-6 Ft. Box(1986)
66=Comanche 2WD-7 Ft. Box(1986)
63=Comanche 4WD-6 Ft. Box(1986)
65=Comanche 4WD-7 Ft. Box(1986)
15=Grand Wagoneer 4 Dr.(1984-86)
25=J-10 Truck 7 Ft. Box(1981-84)
26=J10 Truck 8 Ft. Box(1981-86)
27=J-20 Truck 8 Ft. Box(1981-86)
15=Wagoneer 4 Dr.(1981-83)
75=Wagoneer 4WD-4 Dr.(1984-86)

BODY
CJ=CJ-5, CJ-6, CJ-7, CJ-8, Scrambler(1981-86)
MJ=Comanche Pickup(1986)

STYLES
SJ=Wagoneer(1981-83), Grand Wagoneer(1984-86), Cherokee(1981-83), J-10, J-20(1981-86)
XJ=Wagoneer(1984-86), Cherokee(1984-86)

AR = Use as Required - = Non Illustrated Part P.A.R. = Paint as Required

« RETURN TO GROUP INDEX »

CONTROLS, SHIFT, LOWER, COLUMN AUTOMATIC TRANSMISSION CJ-5,6,7,8 SCRAMBLER
Figure 21A-1400

81J51 1400

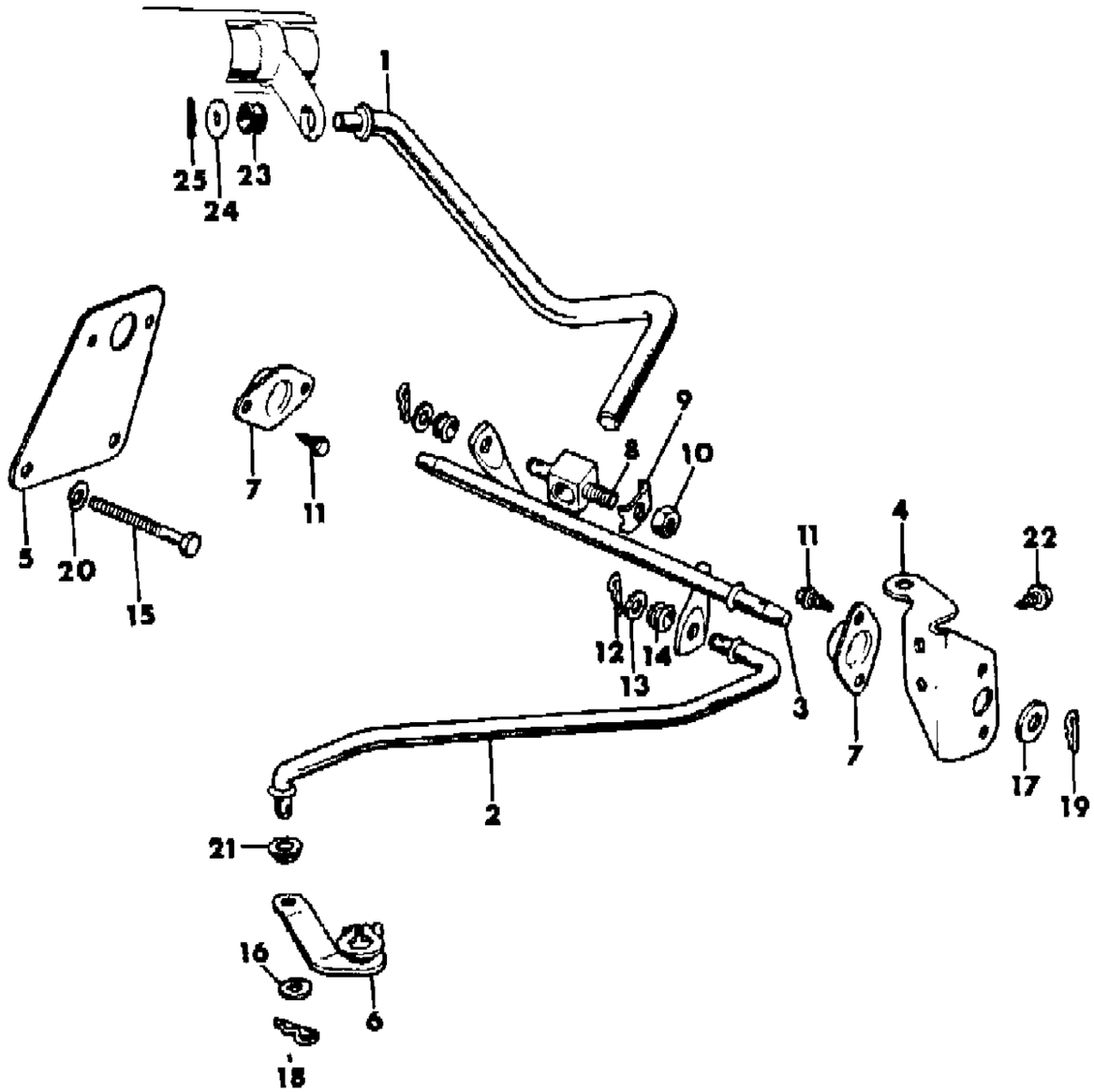

ITEM	PART NUMBER	QTY	BODY	MODEL	DESCRIPTION
	J321 7256	1			1981
	J323 8418	1			1982-86
22	J400 6297	1			SCREW
23	J319 4672	1			GROMMET
24	J400 1102	1			WASHER
25	J400 6486	1			PIN, Hitch

MODEL CODES
16=Cherokee 2 Dr.(1981-83)
17=Cherokee 2 Dr.(1981-83)
73=Cherokee 2WD-2 Dr.(1984-86)
74=Cherokee 2WD-4 Dr.(1984-86)
18=Cherokee 4 Dr.(1981-83)
77=Cherokee 4WD-2 Dr.(1984-86)
78=Cherokee 4WD-4 Dr.(1984-86)
85=CJ-5 (1981-83)
86=CJ-6(1981)
87=CJ-7(1981-86)
88=CJ-8, Scrambler(1981-86)
64=Comanche 2WD-6 Ft. Box(1986)
66=Comanche 2WD-7 Ft. Box(1986)
63=Comanche 4WD-6 Ft. Box(1986)
65=Comanche 4WD-7 Ft. Box(1986)
15=Grand Wagoneer 4 Dr.(1984-86)
25=J-10 Truck 7 Ft. Box(1981-84)
26=J10 Truck 8 Ft. Box(1981-86)
27=J-20 Truck 8 Ft. Box(1981-86)
15=Wagoneer 4 Dr.(1981-83)
75=Wagoneer 4WD-4 Dr.(1984-86)

BODY
CJ=CJ-5, CJ-6, CJ-7, CJ-8, Scrambler(1981-86)
MJ=Comanche Pickup(1986)

STYLES
SJ=Wagoneer(1981-83), Grand Wagoneer(1984-86), Cherokee(1981-83), J-10, J-20(1981-86)
XJ=Wagoneer(1984-86), Cherokee(1984-86)

AR = Use as Required - = Non Illustrated Part P.A.R. = Paint as Required

« RETURN TO GROUP INDEX

CONTROLS, GEARSHIFT, FLOOR MOUNTED AUTOMATIC TRANSMISSION CJ-5,6,7,8 - (EXPORT RIGHT HAND DRIVE)
Figure 21A-1500

81 J51 1500

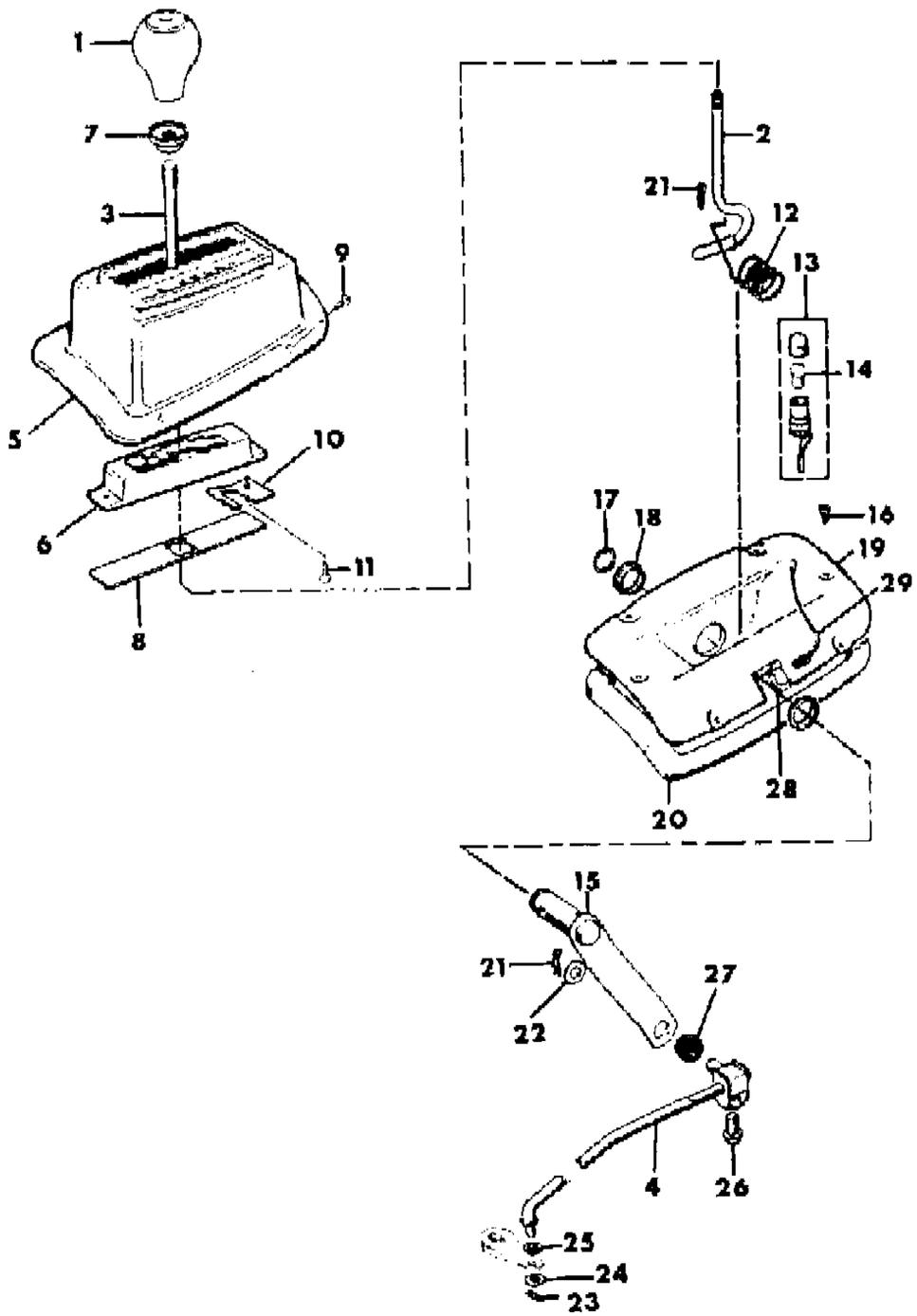

ITEM	PART NUMBER	QTY	BODY	MODEL	DESCRIPTION
1	J323 4979	1			KNOB, Shift
2	J323 4472	1			LEVER, Shift, Lower
3	J536 1654	1			LEVER, Shift, Upper
4					ROD, Shift
	J536 1606	1			1981
	J536 3100	1			1982-86
5	J321 9702	1			BEZEL, Gear Selector
6	J321 9700	1			GATE, Shift Lever
7	J400 6322	1			NUT, Jam
8	J321 9595	1			SHIELD
9	J400 4710	4			SCREW
10					RETAINER
	J321 9651	1			Left Hand Part
	J321 9650	1			Right Hand Part
11	J400 4566	3			SCREW
12	J321 5214	1			SPRING
13	J369 6741	1			SOCKET
14	J320 4552	1			BULB
15	J323 4436	1			LEVER
16	J812 0052	6			SCREW
17	J312 3727	1			RING
18	J321 8237	2			BUSHING
19	J321 8230	1			BRACKET
20	J366 8321	1			SEAL
21	J400 4295	1			PIN, Hitch
22	J400 1091	1			WASHER
23	J400 5122	1			PIN, Hitch
24	J400 1085	1			WASHER
25					BUSHING
	J321 7256	1			1981
	J323 8418	1			1982-86
26	J400 6036	1			BOLT
27	J321 2549	1			GROMMET
28	J400 1598	1			CLIP
29	J575 2583	1			WIRE

MODEL CODES

16=Cherokee 2 Dr.(1981-83)
17=Cherokee 2 Dr.(1981-83)
73=Cherokee 2WD-2 Dr.(1984-86)
74=Cherokee 2WD-4 Dr.(1984-86)
18=Cherokee 4 Dr.(1981-83)
77=Cherokee 4WD-2 Dr.(1984-86)
78=Cherokee 4WD-4 Dr.(1984-86)
85=CJ-5 (1981-83)
86=CJ-6(1981)
87=CJ-7(1981-86)
88=CJ-8, Scrambler(1981-86)
64=Comanche 2WD-6 Ft. Box(1986)
66=Comanche 2WD-7 Ft. Box(1986)
63=Comanche 4WD-6 Ft. Box(1986)
65=Comanche 4WD-7 Ft. Box(1986)
15=Grand Wagoneer 4 Dr.(1984-86)
25=J-10 Truck 7 Ft. Box(1981-84)
26=J10 Truck 8 Ft. Box(1981-86)
27=J-20 Truck 8 Ft. Box(1981-86)
15=Wagoneer 4 Dr.(1981-83)
75=Wagoneer 4WD-4 Dr.(1984-86)

BODY
CJ=CJ-5, CJ-6, CJ-7, CJ-8, Scrambler(1981-86)
MJ=Comanche Pickup(1986)

STYLES
SJ=Wagoneer(1981-83), Grand Wagoneer(1984-86), Cherokee(1981-83), J-10, J-20(1981-86)
XJ=Wagoneer(1984-86), Cherokee(1984-86)

AR = Use as Required - = Non Illustrated Part P.A.R. = Paint as Required

« RETURN TO GROUP INDEX

CONTROLS, GEARSHIFT, FLOOR MOUNTED AUTOMATIC TRANSMISSION XJ CHEROKEE, XJ WAGONEER, COMANCHE
Figure 21A-1600

81J51 1600

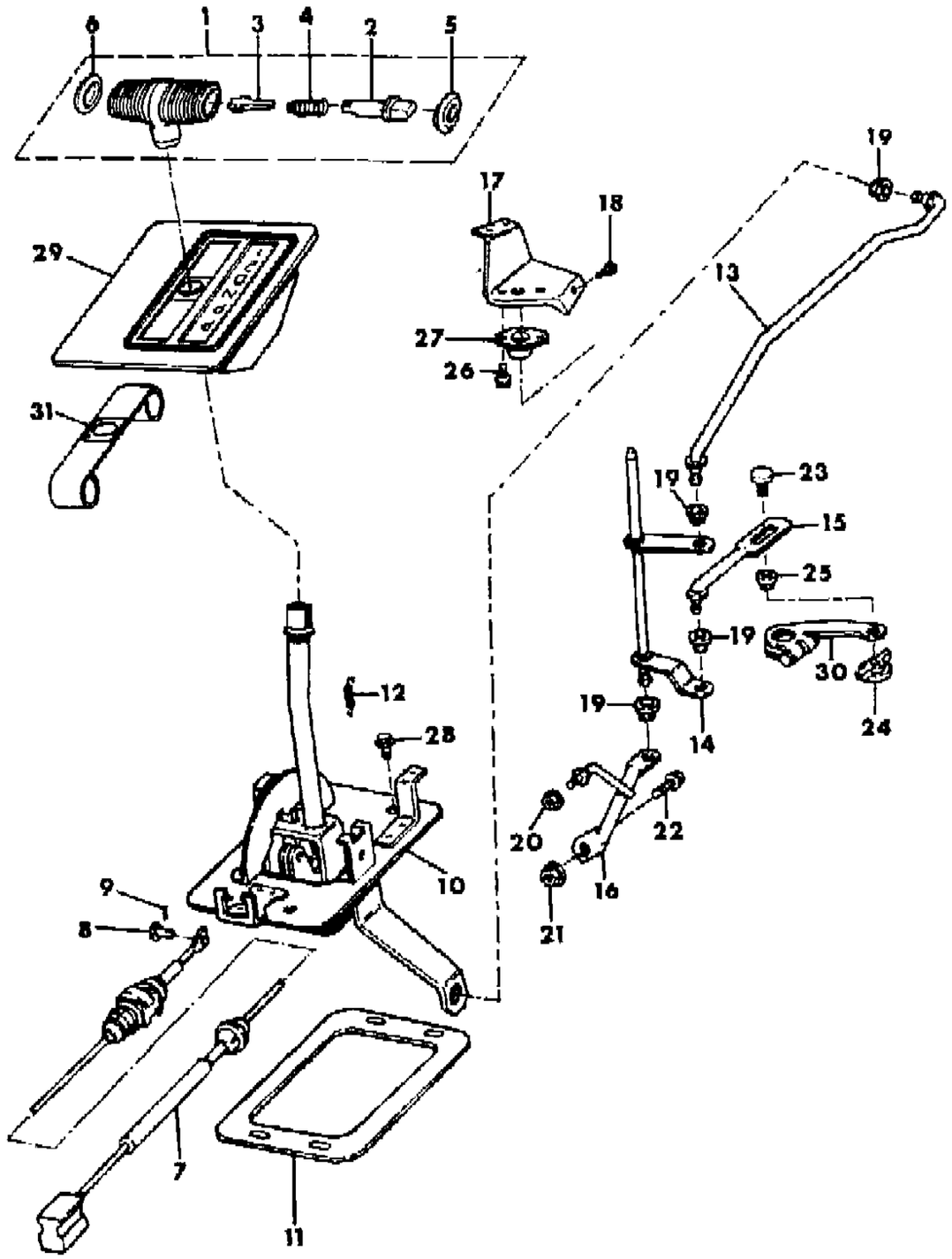

ITEM	PART NUMBER	QTY	BODY	MODEL	DESCRIPTION
1	5300 0675	1			HANDLE ASSEMBLY, Lever ***
2	5300 0211	1			BUTTON
3	5300 0865	1			LEVER
4	5300 0866	1			SPRING
5	5300 0867	1			CAP
6	5300 0868	1			CAP
7					CABLE, Shift
	5300 0672	1	XJ		1984-85
	5300 3351	1	XJ,MJ		1986
8	3420 1747	1			PIN, Clevis
9	J400 6723	1			PIN, Locking
10	5300 0755	1			HOUSING, Shift
11	5300 0659	1			SEAL, Shift Housing
12					SPRING
	5300 0702	1	XJ		1984-85
	5300 3350	1	XJ,MJ		1986
13					ROD, Shift
	5300 1583	1			w/Gas Engine
	5300 1710	1			w/Diesel Engine
14	5300 1584	1			SHAFT
15	5300 1585	1			ROD, Shift
16					SUPPORT
	5300 1587	1			w/Gas Engine
	5300 1458	1			w/Diesel Engine
17					BRACKET
	5300 1618	1			w/Gas Engine
	5300 1709	1			w/Diesel Engine
18	3420 1408	3			SCREW
19	J323 8418	4			BUSHING
20	1150 2811	1			NUT
21	1150 2813	1			NUT
22	1150 5098	1			BOLT
23	5300 1588	1			PIN
24	J420 0428	1			NUT
25	5300 1589	1			BUSHING
26	1150 2453	2			SCREW
27	J535 2589	1			BEARING
28	3420 1033	4			BOLT
29					BEZEL, Shift

MODEL CODES

16=Cherokee 2 Dr.(1981-83)
17=Cherokee 2 Dr.(1981-83)
73=Cherokee 2WD-2 Dr.(1984-86)
74=Cherokee 2WD-4 Dr.(1984-86)
18=Cherokee 4 Dr.(1981-83)
77=Cherokee 4WD-2 Dr.(1984-86)
78=Cherokee 4WD-4 Dr.(1984-86)
85=CJ-5 (1981-83)
86=CJ-6(1981)
87=CJ-7(1981-86)
88=CJ-8, Scrambler(1981-86)
64=Comanche 2WD-6 Ft. Box(1986)
66=Comanche 2WD-7 Ft. Box(1986)
63=Comanche 4WD-6 Ft. Box(1986)
65=Comanche 4WD-7 Ft. Box(1986)
15=Grand Wagoneer 4 Dr.(1984-86)
25=J-10 Truck 7 Ft. Box(1981-84)
26=J10 Truck 8 Ft. Box(1981-86)
27=J-20 Truck 8 Ft. Box(1981-86)
15=Wagoneer 4 Dr.(1981-83)
75=Wagoneer 4WD-4 Dr.(1984-86)

BODY
CJ=CJ-5, CJ-6, CJ-7, CJ-8, Scrambler(1981-86)
MJ=Comanche Pickup(1986)

STYLES
SJ=Wagoneer(1981-83), Grand Wagoneer(1984-86), Cherokee(1981-83), J-10, J-20(1981-86)
XJ=Wagoneer(1984-86), Cherokee(1984-86)

AR = Use as Required - = Non Illustrated Part P.A.R. = Paint as Required

« RETURN TO GROUP INDEX »

81J51 1600

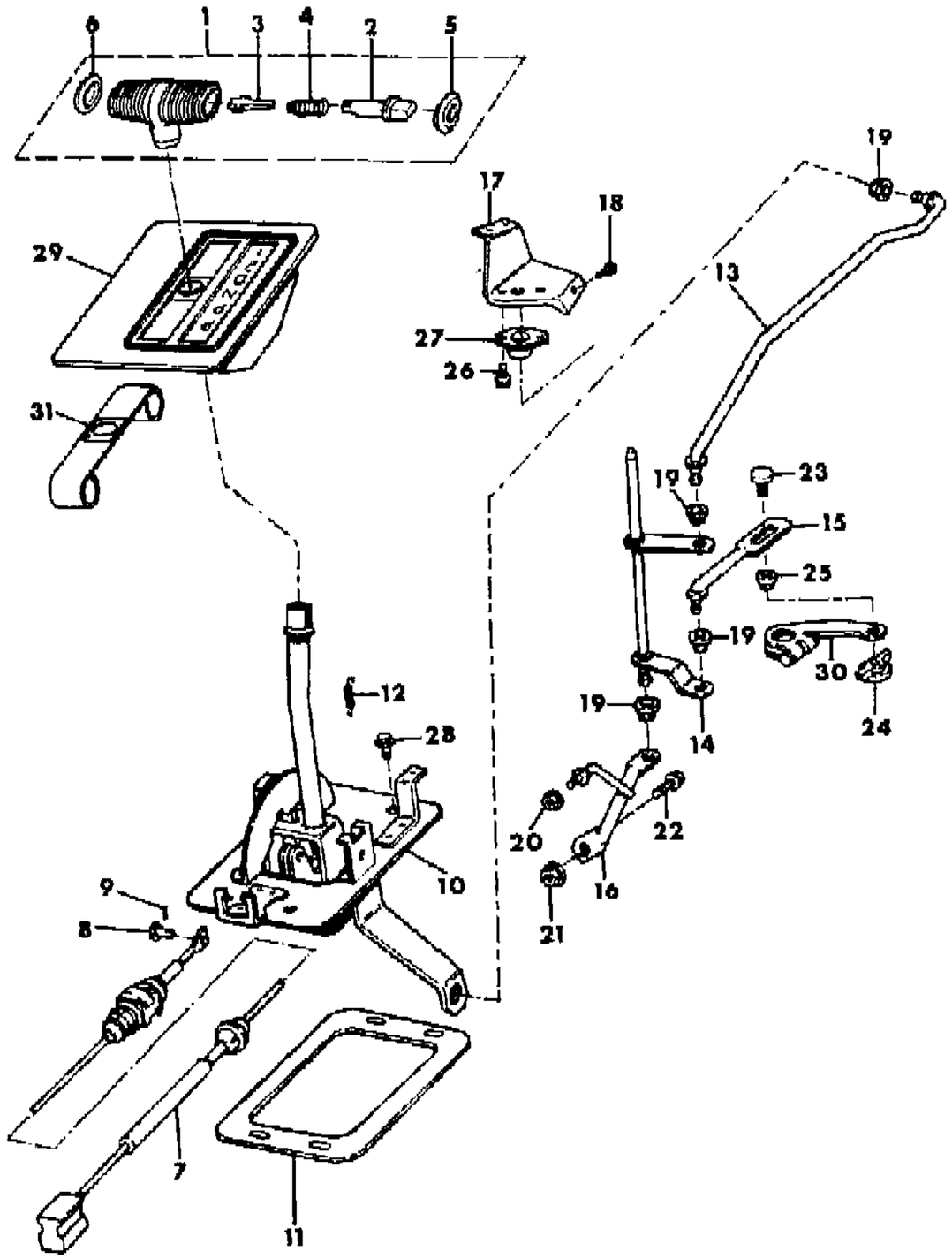

ITEM	PART NUMBER	QTY	BODY	MODEL	DESCRIPTION
	5300 1399	1	XJ		1984-85
	5300 2523	1	XJ,MJ		1986
30	5300 0811	1			LEVER
31					SHIELD
	5300 2524	1	XJ,MJ		1986

MODEL CODES
16=Cherokee 2 Dr.(1981-83)
17=Cherokee 2 Dr.(1981-83)
73=Cherokee 2WD-2 Dr.(1984-86)
74=Cherokee 2WD-4 Dr.(1984-86)
18=Cherokee 4 Dr.(1981-83)
77=Cherokee 4WD-2 Dr.(1984-86)
78=Cherokee 4WD-4 Dr.(1984-86)
85=CJ-5 (1981-83)
86=CJ-6(1981)
87=CJ-7(1981-86)
88=CJ-8, Scrambler(1981-86)
64=Comanche 2WD-6 Ft. Box(1986)
66=Comanche 2WD-7 Ft. Box(1986)
63=Comanche 4WD-6 Ft. Box(1986)
65=Comanche 4WD-7 Ft. Box(1986)
15=Grand Wagoneer 4 Dr.(1984-86)
25=J-10 Truck 7 Ft. Box(1981-84)
26=J10 Truck 8 Ft. Box(1981-86)
27=J-20 Truck 8 Ft. Box(1981-86)
15=Wagoneer 4 Dr.(1981-83)
75=Wagoneer 4WD-4 Dr.(1984-86)

BODY
CJ=CJ-5, CJ-6, CJ-7, CJ-8, Scrambler(1981-86)
MJ=Comanche Pickup(1986)

STYLES
SJ=Wagoneer(1981-83), Grand Wagoneer(1984-86), Cherokee(1981-83), J-10, J-20(1981-86)
XJ=Wagoneer(1984-86), Cherokee(1984-86)

AR = Use as Required - = Non Illustrated Part P.A.R. = Paint as Required

CONTROLS, SHIFT, LOWER, COLUMN AUTOMATIC TRANSMISSION SJ WAGONEER, J10, J20
Figure 21A-1700

81J51 1700

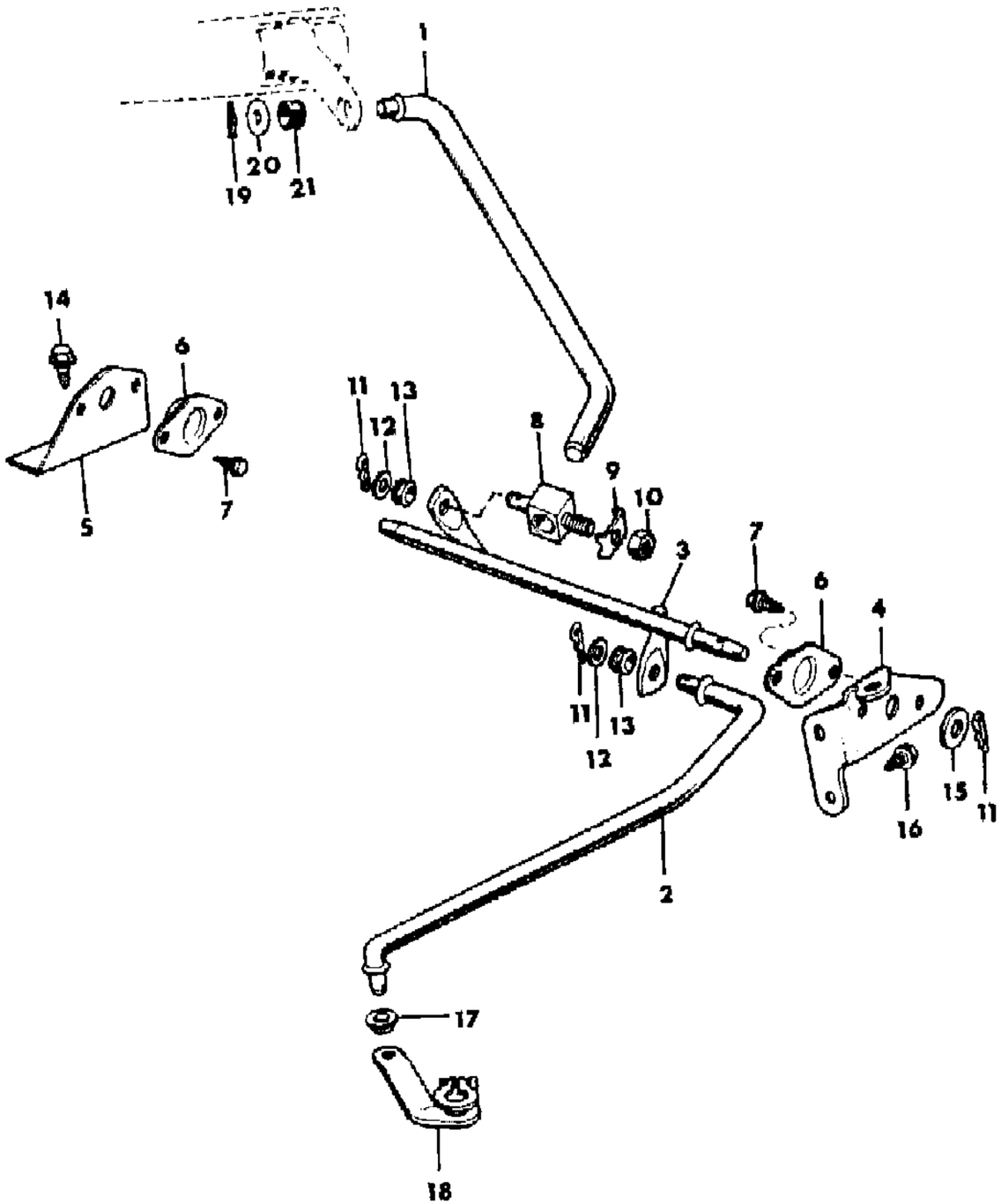

ITEM	PART NUMBER	QTY	BODY	MODEL	DESCRIPTION
1					ROD, Shift
	J536 0067	1		15	
	J536 0068	1		27	
2	J536 3103	1			ROD, Shift
3					BELLCRANK
	J536 0925	1			w/Six Cylinder Engine
	J536 0071	1			w/Eight Cylinder Engine
4	J536 0066	1			BRACKET
5	J536 0117	1			BRACKET
6	J535 2589	2			BEARING
7	J942 6241	4			SCREW
8	J536 0178	1			TRUNNION ***
9	J094 8180	1			CLIP
10	J941 6531	1			NUT
11	J400 4295	3			COTTER PIN ***
12	J400 1091	2			WASHER
13	J321 2549	2			BUSHING
14	S942 4824	2			SCREW
15	J012 0388	1			WASHER
16	J400 6297	2			SCREW
17	J323 8418	1			BUSHING
18					LEVER
	J536 0152	1			1981
	J536 3106	1			1982-86: w/Six Cylinder Engine, w/Throttle Rod J3239820
	J323 8938	1			1982-86: w/Six Cylinder Engine, w/Throttle Rod J3241261
	J536 3106	1			1982-86: w/Eight Cylinder Engine
19	J400 6486	1			COTTER PIN ***
20	J400 1102	1			WASHER
21	J319 4672	1			BUSHING

MODEL CODES

16=Cherokee 2 Dr.(1981-83)	78=Cherokee 4WD-4 Dr.(1984-86)	64=Comanche 2WD-6 Ft. Box(1986)	25=J-10 Truck 7 Ft. Box(1981-84)
17=Cherokee 2 Dr.(1981-83)	85=CJ-5 (1981-83)	66=Comanche 2WD-7 Ft. Box(1986)	26=J10 Truck 8 Ft. Box(1981-86)
73=Cherokee 2WD-2 Dr.(1984-86)	86=CJ-6(1981)	63=Comanche 4WD-6 Ft. Box(1986)	27=J-20 Truck 8 Ft. Box(1981-86)
74=Cherokee 2WD-4 Dr.(1984-86)	87=CJ-7(1981-86)	65=Comanche 4WD-7 Ft. Box(1986)	15=Wagoneer 4 Dr.(1981-83)
18=Cherokee 4 Dr.(1981-83)	88=CJ-8, Scrambler(1981-86)	15=Grand Wagoneer 4 Dr.(1984-86)	75=Wagoneer 4WD-4 Dr.(1984-86)
77=Cherokee 4WD-2 Dr.(1984-86)			

BODY
CJ=CJ-5, CJ-6, CJ-7, CJ-8, Scrambler(1981-86)
MJ=Comanche Pickup(1986)

STYLES
SJ=Wagoneer(1981-83), Grand Wagoneer(1984-86), Cherokee(1981-83), J-10, J-20(1981-86)
XJ=Wagoneer(1984-86), Cherokee(1984-86)

AR = Use as Required - = Non Illustrated Part P.A.R. = Paint as Required

« RETURN TO GROUP INDEX

CONTROLS, GEARSHIFT, COLUMN MOUNTED AUTOMATIC TRANSMISSION COMANCHE, 1986
Figure 21A-1800

81J51 1800

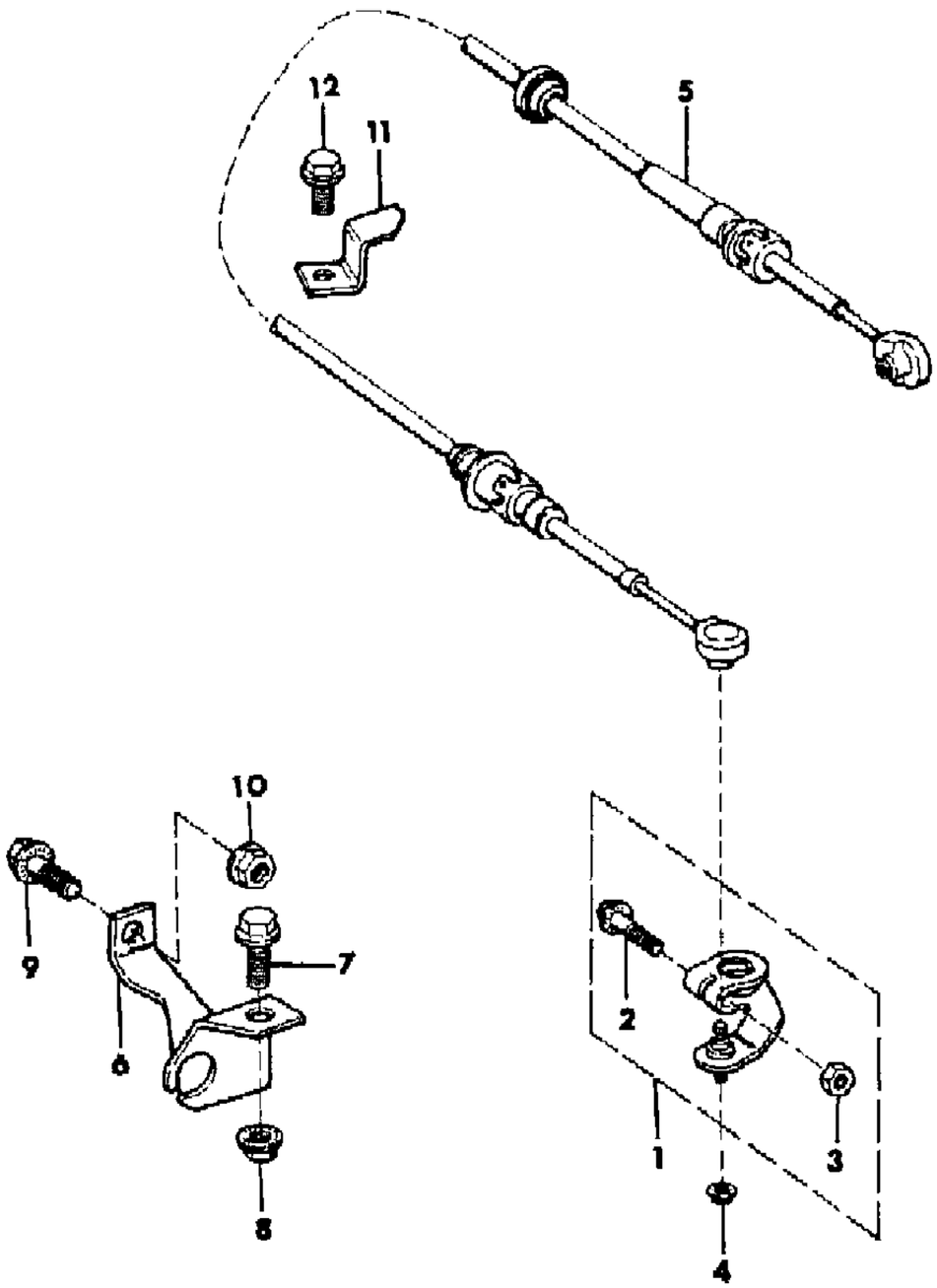

ITEM	PART NUMBER	QTY	BODY	MODEL	DESCRIPTION
1	5300 3090	1			LEVER
2	J400 6357	1			SCREW
3	J011 4381	1			NUT
4	1150 2811	1			NUT
5	5300 3092	1			CABLE
6	5300 3089	1			BRACKET
7	J400 7162	1			BOLT
8	J941 8897	1			NUT
9	1150 2628	1			BOLT
10	1150 2729	1			NUT
11	5300 4375	1			GUIDE
12	1150 2453	1			SCREW

MODEL CODES
16=Cherokee 2 Dr.(1981-83)
17=Cherokee 2 Dr.(1981-83)
73=Cherokee 2WD-2 Dr.(1984-86)
74=Cherokee 2WD-4 Dr.(1984-86)
18=Cherokee 4 Dr.(1981-83)
77=Cherokee 4WD-2 Dr.(1984-86)
78=Cherokee 4WD-4 Dr.(1984-86)
85=CJ-5 (1981-83)
86=CJ-6(1981)
87=CJ-7(1981-86)
88=CJ-8, Scrambler(1981-86)
64=Comanche 2WD-6 Ft. Box(1986)
66=Comanche 2WD-7 Ft. Box(1986)
63=Comanche 4WD-6 Ft. Box(1986)
65=Comanche 4WD-7 Ft. Box(1986)
15=Grand Wagoneer 4 Dr.(1984-86)
25=J-10 Truck 7 Ft. Box(1981-84)
26=J10 Truck 8 Ft. Box(1981-86)
27=J-20 Truck 8 Ft. Box(1981-86)
15=Wagoneer 4 Dr.(1981-83)
75=Wagoneer 4WD-4 Dr.(1984-86)

BODY
CJ=CJ-5, CJ-6, CJ-7, CJ-8, Scrambler(1981-86)
MJ=Comanche Pickup(1986)

STYLES
SJ=Wagoneer(1981-83), Grand Wagoneer(1984-86), Cherokee(1981-83), J-10, J-20(1981-86)
XJ=Wagoneer(1984-86), Cherokee(1984-86)

AR = Use as Required - = Non Illustrated Part P.A.R. = Paint as Required

« RETURN TO GROUP INDEX

CABLE, SPEEDOMETER WITH PINION AND ADAPTER AUTOMATIC TRANSMISSION CJ-5,6,7,8 SCRAMBLER
Figure 21A-1900

81J51 1900

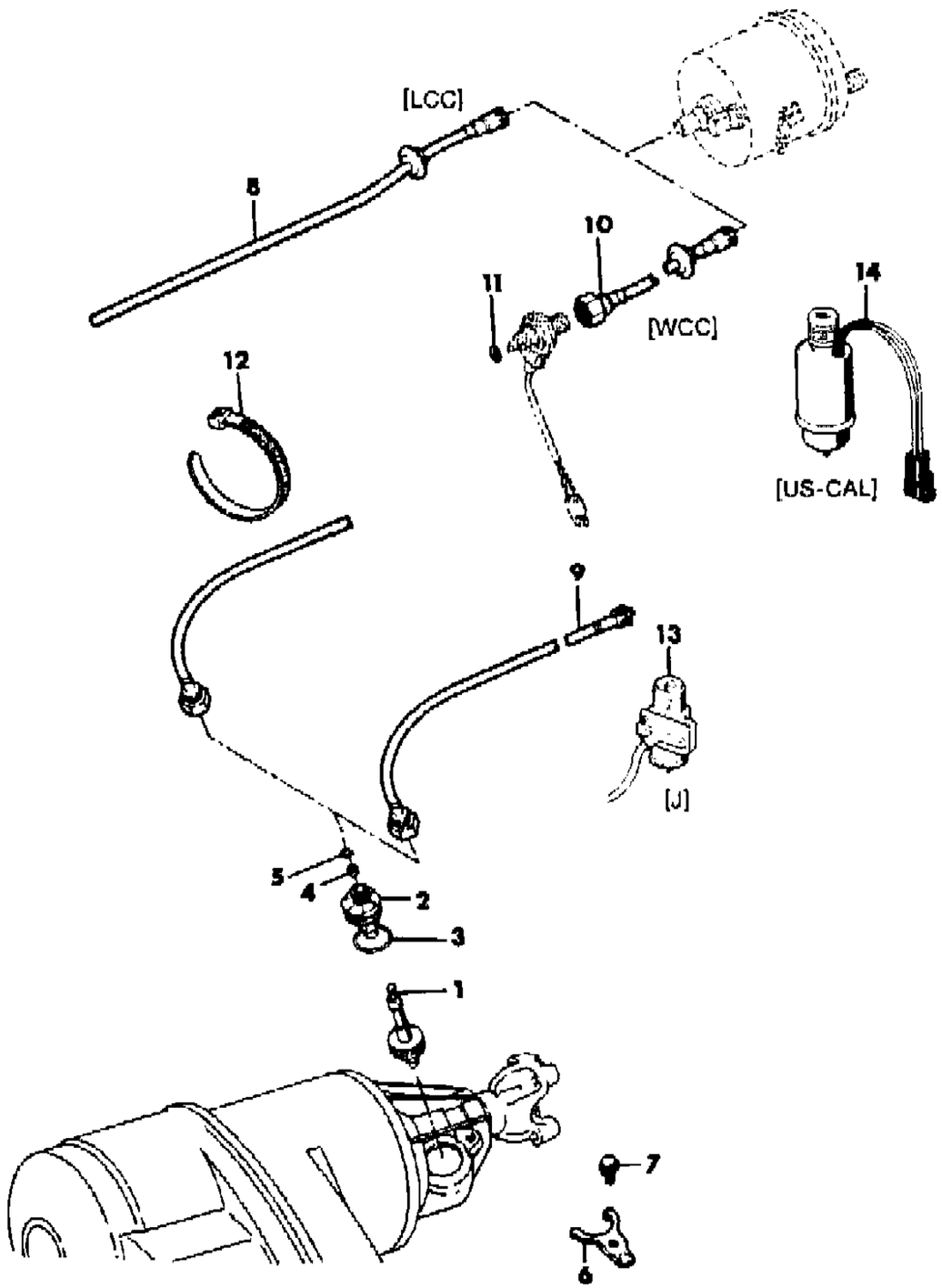

ITEM	PART NUMBER	QTY	BODY	MODEL	DESCRIPTION
1					GEAR, Speedometer, Driven
	J321 2724	AR			24 Teeth
	J321 2725	AR			25 Teeth
	J321 2726	AR			26 Teeth
	J321 2727	AR			27 Teeth
	J321 2728	AR			28 Teeth
	J321 2729	AR			29 Teeth
	J321 2730	AR			30 Teeth
	J321 2731	AR			31 Teeth
	J321 2732	AR			32 Teeth
	J321 2733	AR			33 Teeth
	J321 2734	AR			34 Teeth
	J321 2735	AR			35 Teeth
	J321 2736	AR			36 Teeth
	J321 2738	AR			38 Teeth
	J323 0221	AR			39 Teeth
	J323 0222	AR			40 Teeth
	5300 1488	AR			41 Teeth
	5300 1489	AR			42 Teeth
	J323 8143	AR			43 Teeth
	J323 8144	AR			44 Teeth
	9200 0065	AR			45 Teeth
2					ADAPTER
	J321 2707	AR			Single Position
	J321 2893	AR			Three Position
3	J321 2845	1			O-RING
4	J321 2847	1			SEAL
5	J321 2846	1			RETAINER
6	J321 2844	1			CLAMP
7	J027 3573	1			BOLT
8					CABLE, Speedometer, w/o Speed Control
	J575 2395	1			1981-83: US 49-States, w/GM Four Cylinder Engine
	J575 1959	1			w/o California, w/GM Four Cylinder Engine
9	J576 2340	1			CABLE, Speedometer, Lower
10					CABLE, Speedometer, Upper
	J575 8491	1			1981: w/Six Cylinder Engine
	J575 1962	1			1981: w/Eight Cylinder Engine
	J575 8491	1			1982-86
11	J400 6555	1			O-RING

MODEL CODES
16=Cherokee 2 Dr.(1981-83)
17=Cherokee 2 Dr.(1981-83)
73=Cherokee 2WD-2 Dr.(1984-86)
74=Cherokee 2WD-4 Dr.(1984-86)
18=Cherokee 4 Dr.(1981-83)
77=Cherokee 4WD-2 Dr.(1984-86)
78=Cherokee 4WD-4 Dr.(1984-86)
85=CJ-5 (1981-83)
86=CJ-6(1981)
87=CJ-7(1981-86)
88=CJ-8, Scrambler(1981-86)
64=Comanche 2WD-6 Ft. Box(1986)
66=Comanche 2WD-7 Ft. Box(1986)
63=Comanche 4WD-6 Ft. Box(1986)
65=Comanche 4WD-7 Ft. Box(1986)
15=Grand Wagoneer 4 Dr.(1984-86)
25=J-10 Truck 7 Ft. Box(1981-84)
26=J10 Truck 8 Ft. Box(1981-86)
27=J-20 Truck 8 Ft. Box(1981-86)
15=Wagoneer 4 Dr.(1981-83)
75=Wagoneer 4WD-4 Dr.(1984-86)

BODY
CJ=CJ-5, CJ-6, CJ-7, CJ-8, Scrambler(1981-86)
MJ=Comanche Pickup(1986)

STYLES
SJ=Wagoneer(1981-83), Grand Wagoneer(1984-86), Cherokee(1981-83), J-10, J-20(1981-86)
XJ=Wagoneer(1984-86), Cherokee(1984-86)

AR = Use as Required - = Non Illustrated Part P.A.R. = Paint as Required

CABLE, SPEEDOMETER WITH PINION AND ADAPTER AUTOMATIC TRANSMISSION CJ-5,6,7,8 SCRAMBLER
Figure 21A-1900

81J51 1900

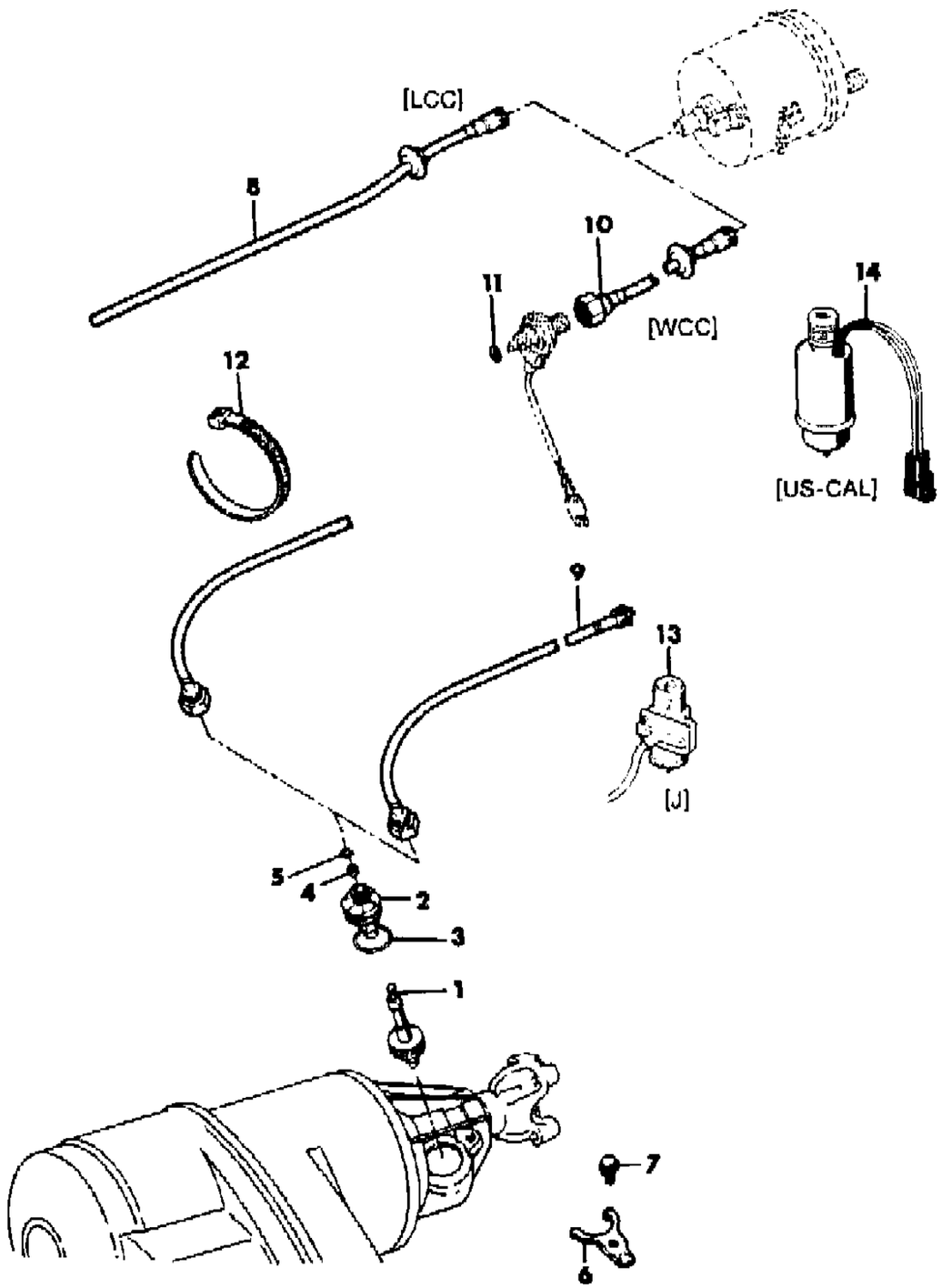

ITEM	PART NUMBER	QTY	BODY	MODEL	DESCRIPTION
12	J322 3227	1			STRAP
13					SENSOR, Speed
	J324 2476	1			Japan
14					SWITCH, Emission
	J323 5649	1			California, w/Four Cylinder Engine

MODEL CODES

16=Cherokee 2 Dr.(1981-83)	78=Cherokee 4WD-4 Dr.(1984-86)	64=Comanche 2WD-6 Ft. Box(1986)	25=J-10 Truck 7 Ft. Box(1981-84)
17=Cherokee 2 Dr.(1981-83)	85=CJ-5 (1981-83)	66=Comanche 2WD-7 Ft. Box(1986)	26=J10 Truck 8 Ft. Box(1981-86)
73=Cherokee 2WD-2 Dr.(1984-86)	86=CJ-6(1981)	63=Comanche 4WD-6 Ft. Box(1986)	27=J-20 Truck 8 Ft. Box(1981-86)
74=Cherokee 2WD-4 Dr.(1984-86)	87=CJ-7(1981-86)	65=Comanche 4WD-7 Ft. Box(1986)	15=Wagoneer 4 Dr.(1981-83)
18=Cherokee 4 Dr.(1981-83)	88=CJ-8, Scrambler(1981-86)	15=Grand Wagoneer 4 Dr.(1984-86)	75=Wagoneer 4WD-4 Dr.(1984-86)
77=Cherokee 4WD-2 Dr.(1984-86)			

BODY
CJ=CJ-5, CJ-6, CJ-7, CJ-8, Scrambler(1981-86)
MJ=Comanche Pickup(1986)

STYLES
SJ=Wagoneer(1981-83), Grand Wagoneer(1984-86), Cherokee(1981-83), J-10, J-20(1981-86)
XJ=Wagoneer(1984-86), Cherokee(1984-86)

AR = Use as Required - = Non Illustrated Part P.A.R. = Paint as Required

« RETURN TO GROUP INDEX

CABLE, SPEEDOMETER AND PINION AUTOMATIC TRANSMISSION XJ CHEROKEE, XJ WAGONEER, COMANCHE
Figure 21A-2000

81J51 2000

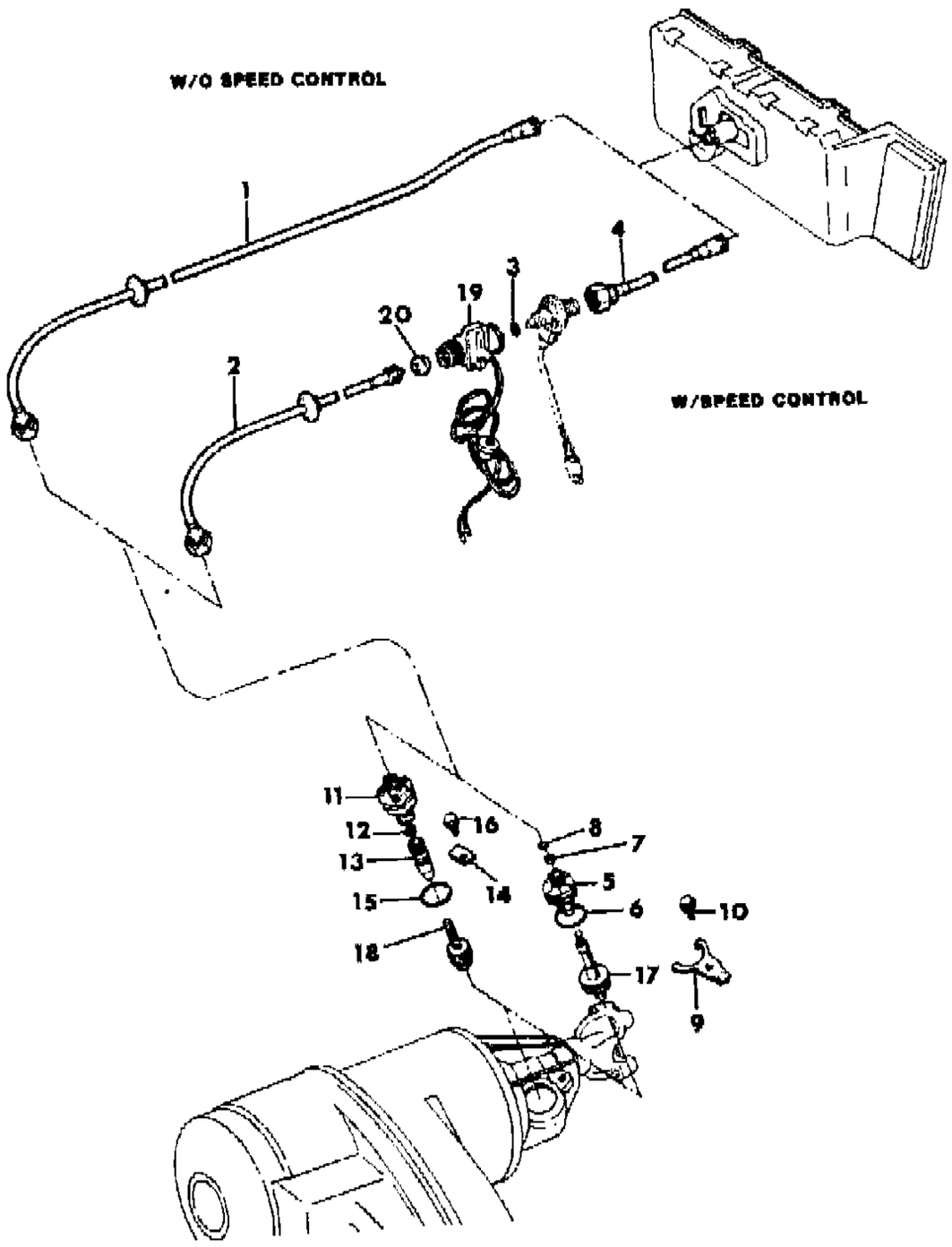

ITEM	PART NUMBER	QTY	BODY	MODEL	DESCRIPTION
1					CABLE, Speedometer
	5300 0058	1	XJ	4WD	1984-85
	5300 3900	1	XJ,MJ	4WD	1986
	5300 1990	1	XJ,MJ	2WD	1984-86
2					CABLE, Speedometer, Lower
	5300 0059	1	XJ	4WD	1984-85
	5300 3899	1	XJ,MJ	4WD	1986
	5300 1989	1	XJ,MJ	2WD	1984-86
3	J400 6555	1			O-RING
4					CABLE, Speedometer, Upper
	5300 0060	1	XJ		1984-85: w/AM 207 Transfer Case
	5300 3073	1	XJ		1984-85: w/AM 229 Transfer Case
	5300 3073	1	XJ,MJ		1986
5	J321 2893	1			ADAPTER, Speedometer
6	J321 2845	1			O-RING
7	J321 2847	1			SEAL
8	J321 2846	1			RETAINER
9	J321 2844	1			CLAMP
10	J027 3573	1			SCREW
11	5300 1105	1	XJ		ADAPTER, 1984-85
12	8351 0031	1			SEAL
13	5300 1485	1			ADAPTER
14	5300 1484	1			RETAINER
15	3420 1877	1			O-RING
16	3420 1886	1			SCREW
17					PINION, Speedometer Drive, 1.42" Dia.
	J321 2729	AR	XJ,MJ		29 Teeth - Black: 1986
	J321 2730	AR	XJ,MJ		30 Teeth - Yellow: 1986
	J321 2731	AR	XJ,MJ		31 Teeth - Green: 1986
	J321 2732	AR			32 Teeth - Black
	J321 2733	AR			33 Teeth - Yellow
	J321 2734	AR			34 Teeth - Green
	J321 2735	AR	XJ,MJ		35 Teeth - Orange: 1986
	J321 2736	AR			36 Teeth - Red
	J321 2737	AR	XJ		37 Teeth - White: 1984-85
	J321 2738	AR	XJ		38 Teeth - Blue: 1984-85
	J323 0221	AR	XJ,MJ		39 Teeth - Green: 1986
	J323 0222	AR	XJ,MJ		40 Teeth - Orange: 1986
	5300 1488	AR	XJ,MJ		41 Teeth - Red: 1986

MODEL CODES
16=Cherokee 2 Dr.(1981-83)
17=Cherokee 2 Dr.(1981-83)
73=Cherokee 2WD-2 Dr.(1984-86)
74=Cherokee 2WD-4 Dr.(1984-86)
18=Cherokee 4 Dr.(1981-83)
77=Cherokee 4WD-2 Dr.(1984-86)
78=Cherokee 4WD-4 Dr.(1984-86)
85=CJ-5 (1981-83)
86=CJ-6(1981)
87=CJ-7(1981-86)
88=CJ-8, Scrambler(1981-86)
64=Comanche 2WD-6 Ft. Box(1986)
66=Comanche 2WD-7 Ft. Box(1986)
63=Comanche 4WD-6 Ft. Box(1986)
65=Comanche 4WD-7 Ft. Box(1986)
15=Grand Wagoneer 4 Dr.(1984-86)
25=J-10 Truck 7 Ft. Box(1981-84)
26=J10 Truck 8 Ft. Box(1981-86)
27=J-20 Truck 8 Ft. Box(1981-86)
15=Wagoneer 4 Dr.(1981-83)
75=Wagoneer 4WD-4 Dr.(1984-86)

BODY
CJ=CJ-5, CJ-6, CJ-7, CJ-8, Scrambler(1981-86)
MJ=Comanche Pickup(1986)

STYLES
SJ=Wagoneer(1981-83), Grand Wagoneer(1984-86), Cherokee(1981-83), J-10, J-20(1981-86)
XJ=Wagoneer(1984-86), Cherokee(1984-86)

AR = Use as Required - = Non Illustrated Part P.A.R. = Paint as Required

« RETURN TO GROUP INDEX »

CABLE, SPEEDOMETER AND PINION AUTOMATIC TRANSMISSION XJ CHEROKEE, XJ WAGONEER, COMANCHE
Figure 21A-2000

81J51 2000

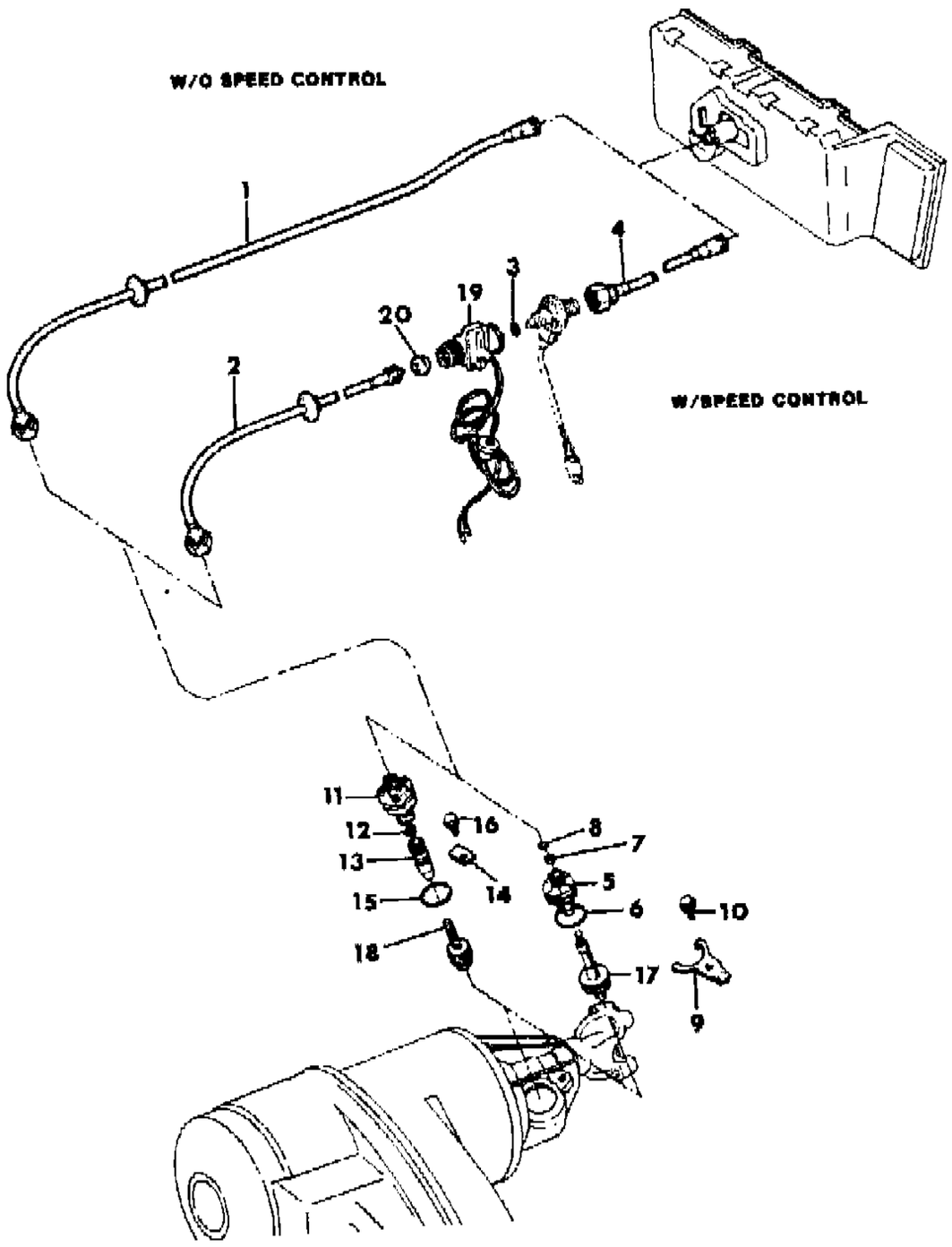

ITEM	PART NUMBER	QTY	BODY	MODEL	DESCRIPTION
	5300 1489	AR	XJ,MJ		42 Teeth - White: 1986
	J323 8143	AR	XJ,MJ		43 Teeth - Blue: 1986
	J323 8144	AR	XJ,MJ		44 Teeth - Black: 1986
	9200 0065	AR	XJ,MJ		45 Teeth - Yellow: 1986
18					PINION, Speedometer Drive, .79" Dia.
	5300 1491	AR			18 Teeth - Yellow
	5300 1492	AR			19 Teeth - Red
	5300 1493	AR			20 Teeth - Blue
	5300 3401	AR	XJ,MJ		21 Teeth - Green: 1986
	5300 3419	AR	XJ,MJ		22 Teeth - Black: 1986
19					SWITCH, Speed Warning
	J324 2476	1			Japan
20	J318 7257	1			RETAINER

MODEL CODES

16=Cherokee 2 Dr.(1981-83)
17=Cherokee 2 Dr.(1981-83)
73=Cherokee 2WD-2 Dr.(1984-86)
74=Cherokee 2WD-4 Dr.(1984-86)
18=Cherokee 4 Dr.(1981-83)
77=Cherokee 4WD-2 Dr.(1984-86)
78=Cherokee 4WD-4 Dr.(1984-86)
85=CJ-5 (1981-83)
86=CJ-6(1981)
87=CJ-7(1981-86)
88=CJ-8, Scrambler(1981-86)
64=Comanche 2WD-6 Ft. Box(1986)
66=Comanche 2WD-7 Ft. Box(1986)
63=Comanche 4WD-6 Ft. Box(1986)
65=Comanche 4WD-7 Ft. Box(1986)
15=Grand Wagoneer 4 Dr.(1984-86)
25=J-10 Truck 7 Ft. Box(1981-84)
26=J10 Truck 8 Ft. Box(1981-86)
27=J-20 Truck 8 Ft. Box(1981-86)
15=Wagoneer 4 Dr.(1981-83)
75=Wagoneer 4WD-4 Dr.(1984-86)

BODY
CJ=CJ-5, CJ-6, CJ-7, CJ-8, Scrambler(1981-86)
MJ=Comanche Pickup(1986)

STYLES
SJ=Wagoneer(1981-83), Grand Wagoneer(1984-86), Cherokee(1981-83), J-10, J-20(1981-86)
XJ=Wagoneer(1984-86), Cherokee(1984-86)

AR = Use as Required - = Non Illustrated Part P.A.R. = Paint as Required

« RETURN TO GROUP INDEX

CABLE, SPEEDOMETER AND PINION AUTOMATIC TRANSMISSION SJ WAGONEER, J10, J20
Figure 21A-2100

81J51 2100

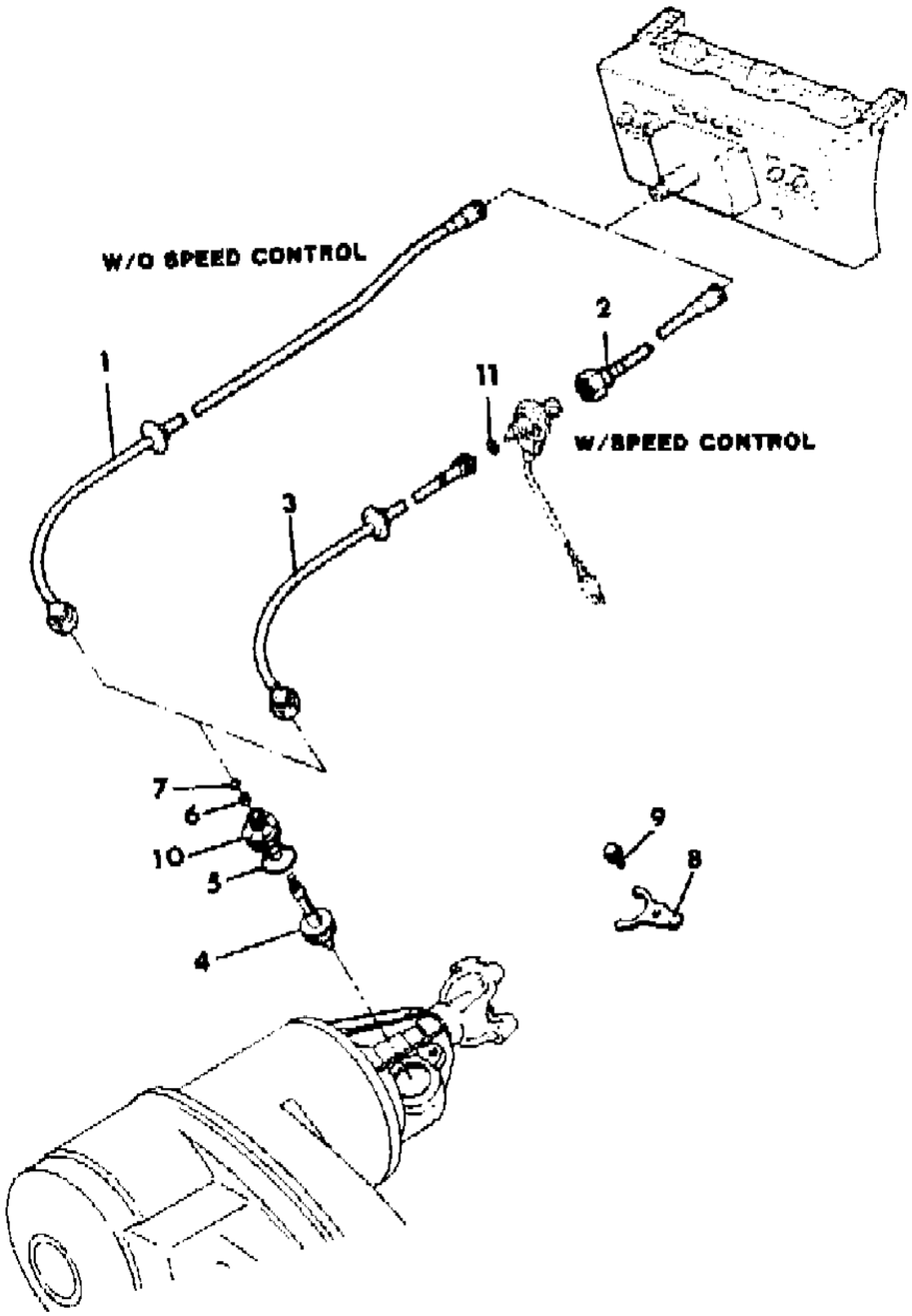

ITEM	PART NUMBER	QTY	BODY	MODEL	DESCRIPTION
1					CABLE, Speedometer
					Six Cylinder Engine
	J575 2280	1			1981: w/Full Time Unit
	J575 2282	1			1981: w/Part Time Unit
	J575 2280	1			1982: w/Full Time Unit, w/Disconnect Front Axle, w/Viscous
					Fan Drive
	J575 2282	1			1982: w/Part Time Unit
	J575 2280	1			1983-86: w/AM 228, AM 229 Transfer Case
	J575 2282	1			1983-86: w/AM 208 Transfer Case
					Eight Cylinder Engine
	J575 2282	1			1981: w/Full Time Unit
	J575 2281	1			1981: w/Part Time Unit
	J575 2282	1			1982: w/Full Time Unit, w/Disconnect Front Axle
	J575 2281	1			1982: w/Part Time Unit
	J575 2281	1			1983-86: w/AM 208 Transfer Case
	J575 2282	1			1983-86: w/AM 228, AM 229 Transfer Case
2					CABLE, Speedometer, Upper
	J575 8491	1			1981: Six Cylinder Engine
	J575 1962	1			1981: Eight Cylinder Engine
	J575 8491	1			1982-86
3					CABLE, Speedometer, Lower
					Six Cylinder Engine
	J575 8621	1			1981: w/Full Time Unit
	J575 8490	1			1981: w/Part Time Unit
	J575 8490	1			1982: w/Part Time Unit
	J575 8621	1			1982: w/Full Time Unit
	J575 8490	1			1983-86: w/AM 208 Transfer Case
	J575 8621	1			1983-86: w/AM 228, AM 229 Transfer Case
					Eight Cylinder Engine
	J575 2284	1			1981: w/Part Time Unit
	J575 2285	1			1981: w/Full Time Unit
	J536 3552	1			1982: w/Part Time Unit
	J575 8490	1			1982: w/Full Time Unit
	J536 3552	1			1983-86: w/AM 208 Transfer Case
	J575 8490	1			1983-86: w/AM 228, AM 229 Transfer Case
4					GEAR, Speedometer, Driven
	J321 2724	AR			24 Teeth
	J321 2725	AR			25 Teeth
	J321 2726	AR			26 Teeth

MODEL CODES

16=Cherokee 2 Dr.(1981-83)
17=Cherokee 2 Dr.(1981-83)
73=Cherokee 2WD-2 Dr.(1984-86)
74=Cherokee 2WD-4 Dr.(1984-86)
18=Cherokee 4 Dr.(1981-83)
77=Cherokee 4WD-2 Dr.(1984-86)
78=Cherokee 4WD-4 Dr.(1984-86)
85=CJ-5 (1981-83)
86=CJ-6(1981)
87=CJ-7(1981-86)
88=CJ-8, Scrambler(1981-86)
64=Comanche 2WD-6 Ft. Box(1986)
66=Comanche 2WD-7 Ft. Box(1986)
63=Comanche 4WD-6 Ft. Box(1986)
65=Comanche 4WD-7 Ft. Box(1986)
15=Grand Wagoneer 4 Dr.(1984-86)
25=J-10 Truck 7 Ft. Box(1981-84)
26=J10 Truck 8 Ft. Box(1981-86)
27=J-20 Truck 8 Ft. Box(1981-86)
15=Wagoneer 4 Dr.(1981-83)
75=Wagoneer 4WD-4 Dr.(1984-86)

BODY
CJ=CJ-5, CJ-6, CJ-7, CJ-8, Scrambler(1981-86)
MJ=Comanche Pickup(1986)

STYLES
SJ=Wagoneer(1981-83), Grand Wagoneer(1984-86), Cherokee(1981-83), J-10, J-20(1981-86)
XJ=Wagoneer(1984-86), Cherokee(1984-86)

AR = Use as Required - = Non Illustrated Part P.A.R. = Paint as Required

« RETURN TO GROUP INDEX »

CABLE, SPEEDOMETER AND PINION AUTOMATIC TRANSMISSION SJ WAGONEER, J10, J20
Figure 21A-2100

81J51 2100

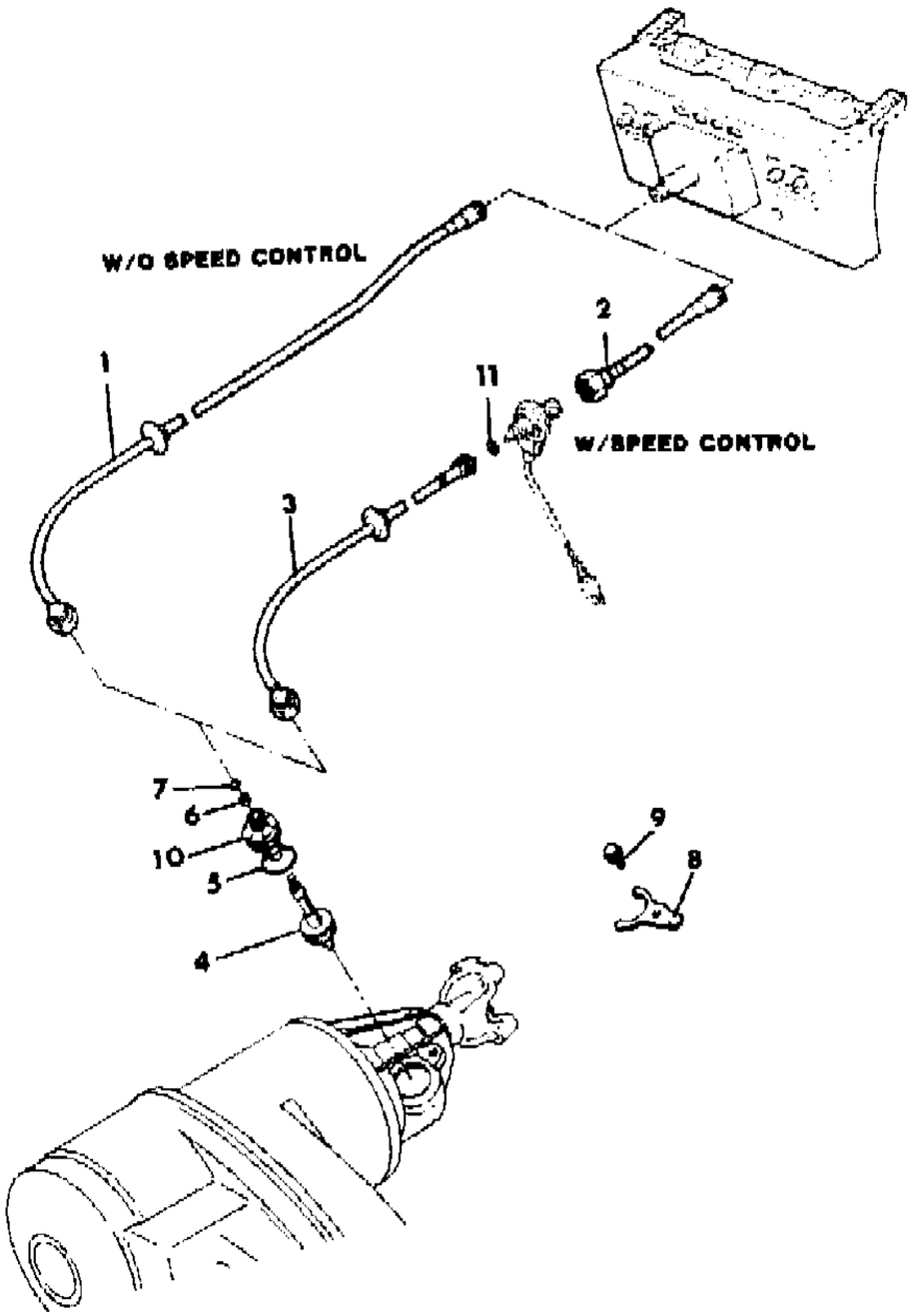

ITEM	PART NUMBER	QTY	BODY	MODEL	DESCRIPTION
	J321 2727	AR			27 Teeth
	J321 2728	AR			28 Teeth
	J321 2729	AR			29 Teeth
	J321 2730	AR			30 Teeth
	J321 2731	AR			31 Teeth
	J321 2732	AR			32 Teeth
	J321 2733	AR			33 Teeth
	J321 2734	AR			34 Teeth
	J321 2735	AR			35 Teeth
	J321 2736	AR			36 Teeth
	J321 2737	AR			37 Teeth
	J321 2738	AR			38 Teeth
	J323 0221	AR			39 Teeth
	5300 1488	AR			41 Teeth
	5300 1489	AR			42 Teeth
	J323 8143	AR			43 Teeth
	J323 8144	AR			44 Teeth
	9200 0065	AR			45 Teeth
5	J321 2845	1			O-RING
6	J321 2847	1			SEAL
7	J321 2846	1			RETAINER
8	J321 2844	1			CLAMP
9	J027 3573	1			SCREW
10					ADAPTER
	J321 2707	1			Single Position
	J321 2893	1			Three Position
11	J400 6555	1			O-RING

MODEL CODES

16=Cherokee 2 Dr.(1981-83)	78=Cherokee 4WD-4 Dr.(1984-86)	64=Comanche 2WD-6 Ft. Box(1986)	25=J-10 Truck 7 Ft. Box(1981-84)
17=Cherokee 2 Dr.(1981-83)	85=CJ-5 (1981-83)	66=Comanche 2WD-7 Ft. Box(1986)	26=J10 Truck 8 Ft. Box(1981-86)
73=Cherokee 2WD-2 Dr.(1984-86)	86=CJ-6(1981)	63=Comanche 4WD-6 Ft. Box(1986)	27=J-20 Truck 8 Ft. Box(1981-86)
74=Cherokee 2WD-4 Dr.(1984-86)	87=CJ-7(1981-86)	65=Comanche 4WD-7 Ft. Box(1986)	15=Wagoneer 4 Dr.(1981-83)
18=Cherokee 4 Dr.(1981-83)	88=CJ-8, Scrambler(1981-86)	15=Grand Wagoneer 4 Dr.(1984-86)	75=Wagoneer 4WD-4 Dr.(1984-86)
77=Cherokee 4WD-2 Dr.(1984-86)			

BODY
CJ=CJ-5, CJ-6, CJ-7, CJ-8, Scrambler(1981-86)
MJ=Comanche Pickup(1986)

STYLES
SJ=Wagoneer(1981-83), Grand Wagoneer(1984-86), Cherokee(1981-83), J-10, J-20(1981-86)
XJ=Wagoneer(1984-86), Cherokee(1984-86)

AR = Use as Required - = Non Illustrated Part P.A.R. = Paint as Required

« RETURN TO GROUP INDEX

ILLUSTRATION NOT AVAILABLE AT TIME OF PUBLICATION

GROUP 22 - WHEELS

ILLUSTRATION TITLE	GROUP-FIG. NO.
CJ	
WHEEL, CAPS, COVERS AND WEIGHTS, CJ-5,6,7,8, SCRAMBLER	Fig. 22-100
WHEEL MOUNTING, SPARE (ON REAR QUARTER) CJ-5,6	Fig. 22-200
WHEEL MOUNTING, SPARE (ON TAILGATE) CJ-5,6	Fig. 22-300
WHEEL MOUNTING, SPARE (SWING OUT) CJ-7,8, SCRAMBLER	Fig. 22-400
WHEEL MOUNTING, SPARE WITH WORLD CAB (EXPORT) CJ-7,8	Fig. 22-500
WHEEL MOUNTING, SPARE (ON SPORT BAR) CJ-8, SCRAMBLER	Fig. 22-600
JACK AND MOUNTING CJ-5,6,7,8	Fig. 22-700
XJ CHEROKEE, XJ WAGONEER, CONMANCHE	
WHEELS, CAPS, COVERS AND WEIGHTS XJ CHEROKEE, XJ WAGONEER, COMANCHE	Fig. 22-800
WHEEL MOUNTING SPARE (INSIDE) XJ CHEROKEE, XJ WAGONEER	Fig. 22-900
WHEEL MOUNTING SPARE (OUTSIDE) XJ CHEROKEE, XJ WAGONEER	Fig. 22-1000
WHEEL MOUNTING, SPARE COMANCHE	Fig. 22-1100
JACK AND MOUNTING XJ CHEROKEE, XJ WAGONEER, COMANCHE	Fig. 22-1200
SJ CHEROKEE, SJ WAGONEER, J10, J20	
WHEELS, CAPS, COVERS AND WEIGHTS SJ CHEROKEE, SJ WAGONEER, J10, J20	Fig. 22-1300
WHEEL MOUNTING, SPARE SJ CHEROKEE, SJ WAGONEER	Fig. 22-1400
WHEEL MOUNTING, SPARE UNDERBODY SJ CHEROKEE, SJ WAGONEER, J10, J20	Fig. 22-1500
JACK AND STORAGE BAG SJ CHEROKEE, SJ WAGONEER, J10, J20	Fig. 22-1600

WHEEL, CAPS, COVERS AND WEIGHTS, CJ-5,6,7,8, SCRAMBLER
Figure 22-100

81J22 100

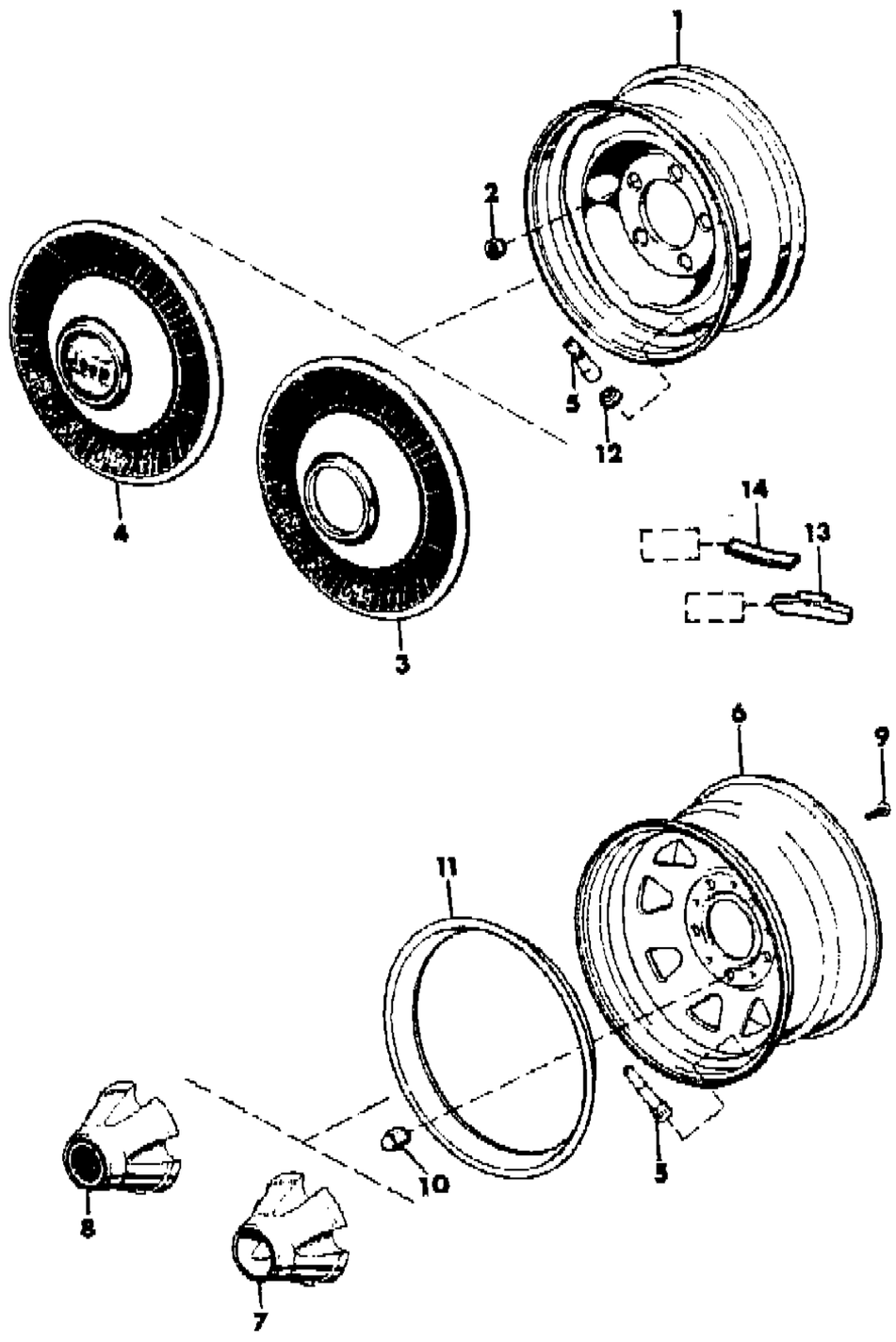

ITEM	PART NUMBER	QTY	BODY	MODEL	DESCRIPTION
1					WHEEL, Steel
	J535 6164	AR			15"x6", P.A.R.
	J535 8808	AR			15"x5-1/2"
	J805 3183	AR			16"x5", P.A.R.
2	J063 5516	AR			NUT, Lug
3	J535 8281	2			COVER, Wheel
4	J535 4752	4			COVER, Wheel
5	J535 5858	AR			EXTENSION, Valve
6					WHEEL, Styled Steel
	J536 4115	AR			15"x7", Argent, P.A.R.
	J536 3400	AR			15"x7", Chrome
	J536 3305	AR			15"x7", White-Black Stripe
	J536 3809	AR			15"x7", Blue or Yellow, P.A.R.
	J535 9774	AR			15"x8", Chrome, Used Less Wheel Hub Caps
	J535 3090	AR			15"x8", Chrome, Used With Wheel Hub Caps
	J536 1396	AR			15"x8", White, Used Less Wheel Hub Caps
	J536 3091	AR			15"x8", White, Used With Wheel Hub Caps
7	J536 2006	2			CAP, Hub
8	J536 2005	2			CAP, Hub
9	J400 7001	AR			SCREW
10	J400 5694	AR			NUT, Lug, Chrome
11	J536 3880	AR			RING, Trim
12	J535 2883	AR			BUSHING
13		AR			WEIGHT, Wheel
	J812 8424	AR			1/4 oz.
	J316 5949	AR			1/2 oz.
	J313 1615	AR			1 oz.
	J316 5783	AR			1-1/2 oz.
	J312 3943	AR			2 oz.
	J316 5784	AR			2-1/2 oz.
	J812 8425	AR			3 oz.
	J812 8426	AR			3-1/2 oz.
	J535 6329	AR			4 oz.
14	J322 6926	AR			1/2 oz.
	J322 6925	AR			1 oz.
	J322 6924	AR			1-1/2 oz.
	J322 6923	AR			2 oz.
	J322 6922	AR			2-1/2 oz.
	J322 6921	AR			3 oz.

MODEL CODES
16=Cherokee 2 Dr.(1981-83)
17=Cherokee 2 Dr.(1981-83)
73=Cherokee 2WD-2 Dr.(1984-86)
74=Cherokee 2WD-4 Dr.(1984-86)
18=Cherokee 4 Dr.(1981-83)
77=Cherokee 4WD-2 Dr.(1984-86)
78=Cherokee 4WD-4 Dr.(1984-86)
85=CJ-5 (1981-83)
86=CJ-6(1981)
87=CJ-7(1981-86)
88=CJ-8, Scrambler(1981-86)
64=Comanche 2WD-6 Ft. Box(1986)
66=Comanche 2WD-7 Ft. Box(1986)
63=Comanche 4WD-6 Ft. Box(1986)
65=Comanche 4WD-7 Ft. Box(1986)
15=Grand Wagoneer 4 Dr.(1984-86)
25=J-10 Truck 7 Ft. Box(1981-84)
26=J10 Truck 8 Ft. Box(1981-86)
27=J-20 Truck 8 Ft. Box(1981-86)
15=Wagoneer 4 Dr.(1981-83)
75=Wagoneer 4WD-4 Dr.(1984-86)

BODY
CJ=CJ-5, CJ-6, CJ-7, CJ-8, Scrambler(1981-86)
MJ=Comanche Pickup(1986)

STYLES
SJ=Wagoneer(1981-83), Grand Wagoneer(1984-86), Cherokee(1981-83), J-10, J-20(1981-86)
XJ=Wagoneer(1984-86), Cherokee(1984-86)

AR = Use as Required - = Non Illustrated Part P.A.R. = Paint as Required

« RETURN TO GROUP INDEX »

WHEEL, CAPS, COVERS AND WEIGHTS, CJ-5,6,7,8, SCRAMBLER
Figure 22-100

81J22 100

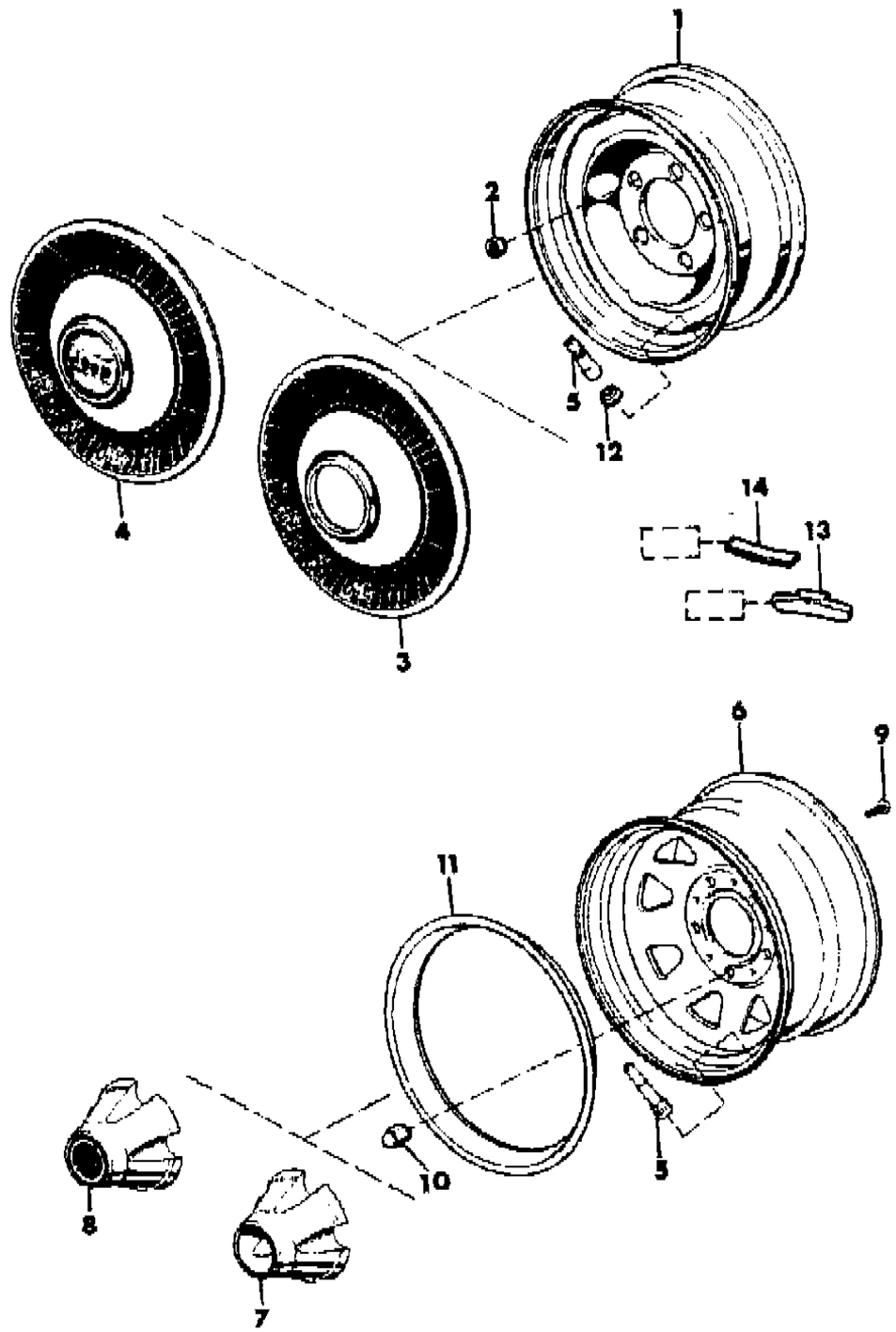

ITEM	PART NUMBER	QTY	BODY	MODEL	DESCRIPTION
	J322 6920	AR			3-1/2 oz.
	J322 6919	AR			4 oz.

MODEL CODES
16=Cherokee 2 Dr.(1981-83)
17=Cherokee 2 Dr.(1981-83)
73=Cherokee 2WD-2 Dr.(1984-86)
74=Cherokee 2WD-4 Dr.(1984-86)
18=Cherokee 4 Dr.(1981-83)
77=Cherokee 4WD-2 Dr.(1984-86)
78=Cherokee 4WD-4 Dr.(1984-86)
85=CJ-5 (1981-83)
86=CJ-6(1981)
87=CJ-7(1981-86)
88=CJ-8, Scrambler(1981-86)
64=Comanche 2WD-6 Ft. Box(1986)
66=Comanche 2WD-7 Ft. Box(1986)
63=Comanche 4WD-6 Ft. Box(1986)
65=Comanche 4WD-7 Ft. Box(1986)
15=Grand Wagoneer 4 Dr.(1984-86)
25=J-10 Truck 7 Ft. Box(1981-84)
26=J10 Truck 8 Ft. Box(1981-86)
27=J-20 Truck 8 Ft. Box(1981-86)
15=Wagoneer 4 Dr.(1981-83)
75=Wagoneer 4WD-4 Dr.(1984-86)

BODY
CJ=CJ-5, CJ-6, CJ-7, CJ-8, Scrambler(1981-86)
MJ=Comanche Pickup(1986)

STYLES
SJ=Wagoneer(1981-83), Grand Wagoneer(1984-86), Cherokee(1981-83), J-10, J-20(1981-86)
XJ=Wagoneer(1984-86), Cherokee(1984-86)

AR = Use as Required - = Non Illustrated Part P.A.R. = Paint as Required

« RETURN TO GROUP INDEX

WHEEL MOUNTING, SPARE (ON REAR QUARTER) CJ-5,6
Figure 22-200

81J22 200

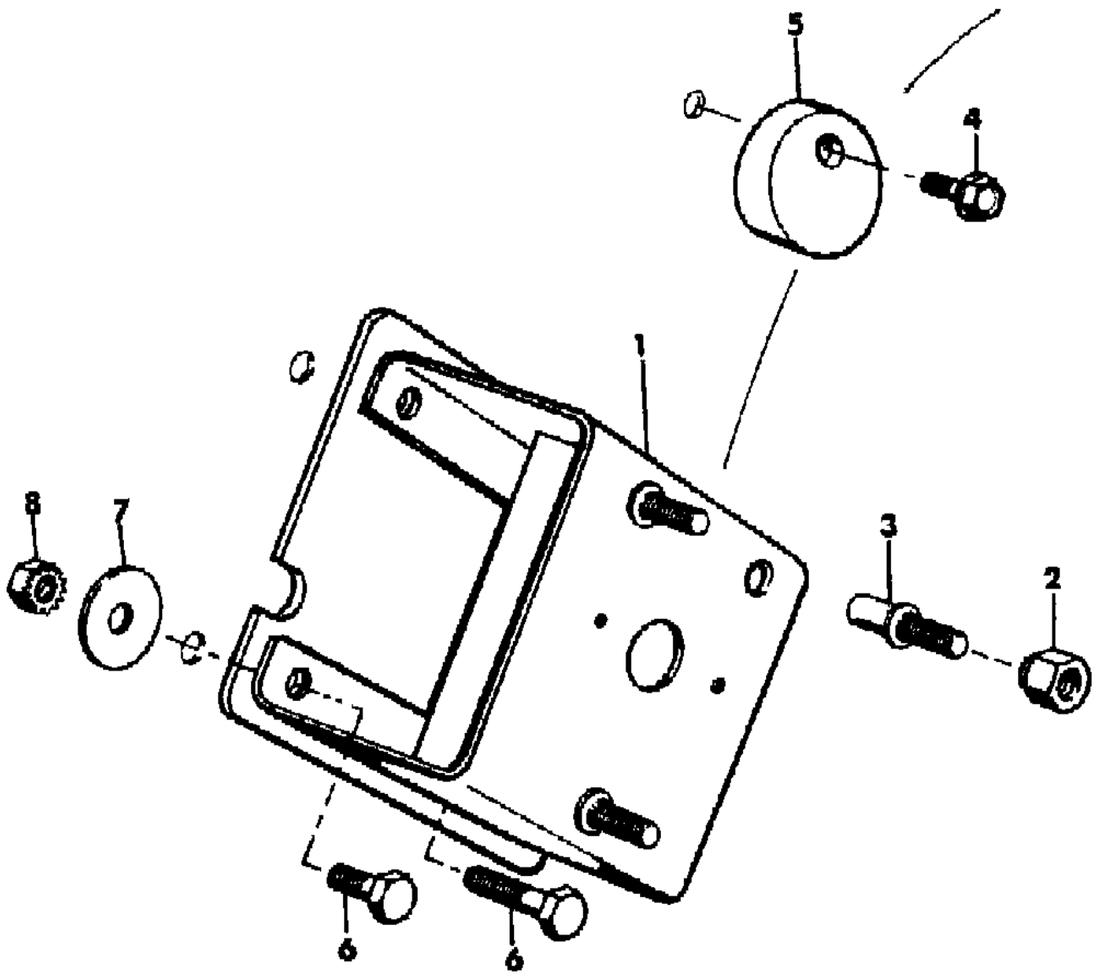

ITEM	PART NUMBER	QTY	BODY	MODEL	DESCRIPTION
1	J546 1361	1			BRACKET, Spare Tire
2	J063 5516	3			NUT, Black
	J400 5694	3			Chrome
3	J069 1830	3			STUD, Weld
4	J400 5603				SCREW
5	J545 9266	1			BUMPER
6	J018 0122	2			BOLT, 1.00"
	J018 0129	2			1.88"
7	J012 0394	4			WASHER
8	J027 1190	4			NUT

MODEL CODES
16=Cherokee 2 Dr.(1981-83)
17=Cherokee 2 Dr.(1981-83)
73=Cherokee 2WD-2 Dr.(1984-86)
74=Cherokee 2WD-4 Dr.(1984-86)
18=Cherokee 4 Dr.(1981-83)
77=Cherokee 4WD-2 Dr.(1984-86)
78=Cherokee 4WD-4 Dr.(1984-86)
85=CJ-5 (1981-83)
86=CJ-6(1981)
87=CJ-7(1981-86)
88=CJ-8, Scrambler(1981-86)
64=Comanche 2WD-6 Ft. Box(1986)
66=Comanche 2WD-7 Ft. Box(1986)
63=Comanche 4WD-6 Ft. Box(1986)
65=Comanche 4WD-7 Ft. Box(1986)
15=Grand Wagoneer 4 Dr.(1984-86)
25=J-10 Truck 7 Ft. Box(1981-84)
26=J10 Truck 8 Ft. Box(1981-86)
27=J-20 Truck 8 Ft. Box(1981-86)
15=Wagoneer 4 Dr.(1981-83)
75=Wagoneer 4WD-4 Dr.(1984-86)

BODY
CJ=CJ-5, CJ-6, CJ-7, CJ-8, Scrambler(1981-86)
MJ=Comanche Pickup(1986)

STYLES
SJ=Wagoneer(1981-83), Grand Wagoneer(1984-86), Cherokee(1981-83), J-10, J-20(1981-86)
XJ=Wagoneer(1984-86), Cherokee(1984-86)

AR = Use as Required - = Non Illustrated Part P.A.R. = Paint as Required

« RETURN TO GROUP INDEX

WHEEL MOUNTING, SPARE (ON TAILGATE) CJ-5,6
Figure 22-300

81J22 300

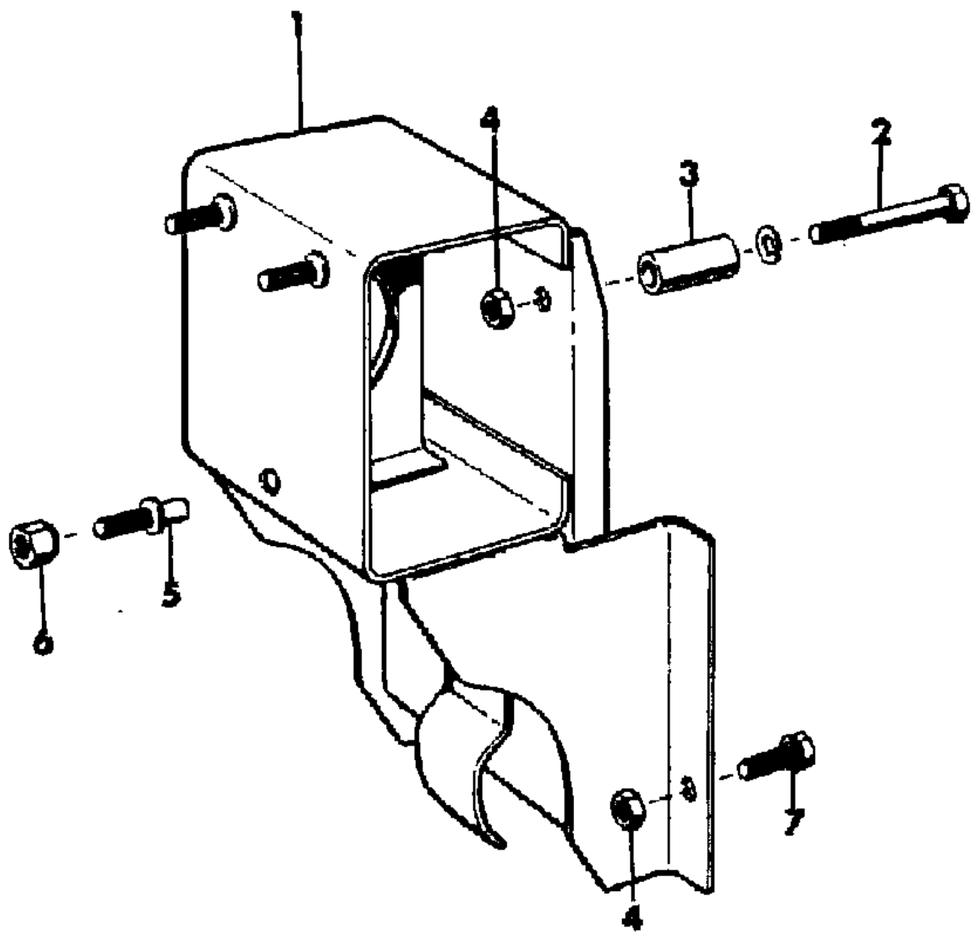

ITEM	PART NUMBER	QTY	BODY	MODEL	DESCRIPTION
1	J098 6351	1			BRACKET, Spare Wheel
2	S012 5973	AR			BOLT
3	J069 2119	AR			SPACER
4	J400 4747	AR			NUT
5	J069 1830	3			STUD, Weld
6	J063 5516	3			NUT, Without Renegade
	J400 5694	3			Chrome
7	S045 5171	AR			SCREW

MODEL CODES

16=Cherokee 2 Dr.(1981-83)
17=Cherokee 2 Dr.(1981-83)
73=Cherokee 2WD-2 Dr.(1984-86)
74=Cherokee 2WD-4 Dr.(1984-86)
18=Cherokee 4 Dr.(1981-83)
77=Cherokee 4WD-2 Dr.(1984-86)
78=Cherokee 4WD-4 Dr.(1984-86)
85=CJ-5 (1981-83)
86=CJ-6(1981)
87=CJ-7(1981-86)
88=CJ-8, Scrambler(1981-86)
64=Comanche 2WD-6 Ft. Box(1986)
66=Comanche 2WD-7 Ft. Box(1986)
63=Comanche 4WD-6 Ft. Box(1986)
65=Comanche 4WD-7 Ft. Box(1986)
15=Grand Wagoneer 4 Dr.(1984-86)
25=J-10 Truck 7 Ft. Box(1981-84)
26=J10 Truck 8 Ft. Box(1981-86)
27=J-20 Truck 8 Ft. Box(1981-86)
15=Wagoneer 4 Dr.(1981-83)
75=Wagoneer 4WD-4 Dr.(1984-86)

BODY
CJ=CJ-5, CJ-6, CJ-7, CJ-8, Scrambler(1981-86)
MJ=Comanche Pickup(1986)

STYLES
SJ=Wagoneer(1981-83), Grand Wagoneer(1984-86), Cherokee(1981-83), J-10, J-20(1981-86)
XJ=Wagoneer(1984-86), Cherokee(1984-86)

AR = Use as Required - = Non Illustrated Part P.A.R. = Paint as Required

« RETURN TO GROUP INDEX

WHEEL MOUNTING, SPARE (SWING OUT) CJ-7,8, SCRAMBLER
Figure 22-400

81J22 400

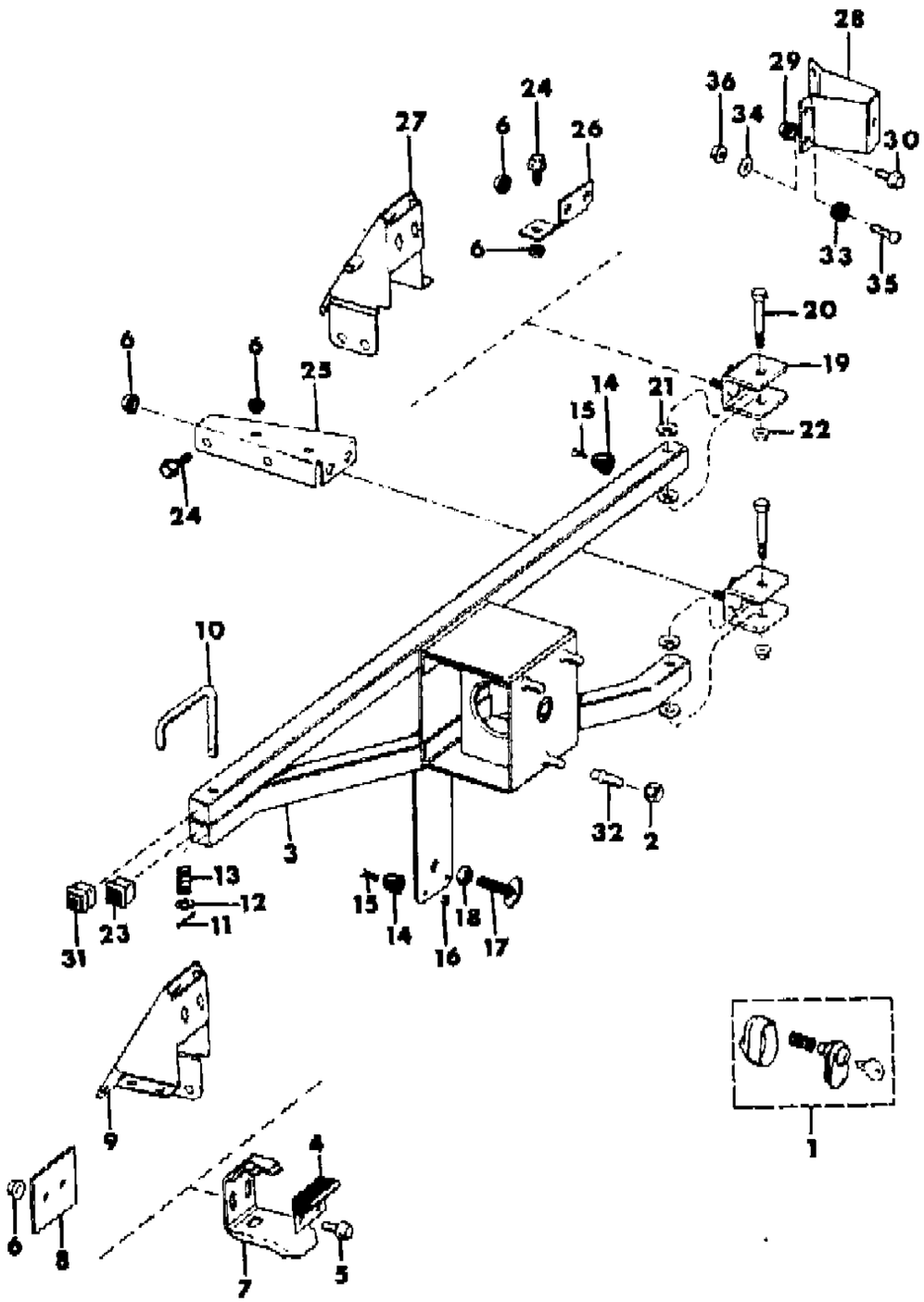

ITEM	PART NUMBER	QTY	BODY	MODEL	DESCRIPTION
1	J899 7143				LOCK, Spare Wheel
2					NUT
	J400 5694	3			Chrome
	J063 5516	3			Without Renegade
3	J546 1833	1			CARRIER, Tire, Used With Pintle Hook
	J576 3656	1			Used Less Pintle Hook, EXPORT
4	J545 9547	1			BUMPER
5	J027 4195	2			SCREW
6	J400 4747	2			NUT
7	J546 0694	1			BRACKET, LATCH
8	J545 9558	1		87	REINFORCEMENT
9	J575 8813	1		88	REINFORCEMENT
10	J546 0695	1			HANDLE
	J575 8922	1			Europe, Australian Design Rules
11	J027 3936	1			PIN
12	J400 4175	1			PUSHNUT ***
13	J546 0157	1			SPRING
14	J097 2277	AR			BUMPER
	J097 5636	AR			EXPORT, Severe Use
15					SCREW
	J015 9947	AR			#10-24x.75"
	J941 4721	AR			#10-16x.38"
	J942 3545	AR			EXPORT, Severe Use, 5/16-18x1"
16	J027 1166	AR			NUT
17	J400 4946	1			BOLT
18	J012 0238	1			NUT
19	J546 0634	2			HINGE ASSEMBLY ***
	J576 4750	2			France
20	J400 6458	2			BOLT, Chrome
	J400 4977	2			Plain
21	J012 0395	4			WASHER, .38" Dia.
	J400 2086	4			.44" Dia.
22	J400 5142	4			NUT, Plain Washer
	J400 4747	4			Serrated Washer
23	J400 7226	2			PLUG, Lower
24	J400 6459	4			BOLT, Chrome
	J942 8638	4			Plain
25	J546 0662	1			REINFORCEMENT
26	J546 1862	1			REINFORCEMENT

MODEL CODES

16=Cherokee 2 Dr.(1981-83)
17=Cherokee 2 Dr.(1981-83)
73=Cherokee 2WD-2 Dr.(1984-86)
74=Cherokee 2WD-4 Dr.(1984-86)
18=Cherokee 4 Dr.(1981-83)
77=Cherokee 4WD-2 Dr.(1984-86)
78=Cherokee 4WD-4 Dr.(1984-86)
85=CJ-5 (1981-83)
86=CJ-6(1981)
87=CJ-7(1981-86)
88=CJ-8, Scrambler(1981-86)
64=Comanche 2WD-6 Ft. Box(1986)
66=Comanche 2WD-7 Ft. Box(1986)
63=Comanche 4WD-6 Ft. Box(1986)
65=Comanche 4WD-7 Ft. Box(1986)
15=Grand Wagoneer 4 Dr.(1984-86)
25=J-10 Truck 7 Ft. Box(1981-84)
26=J10 Truck 8 Ft. Box(1981-86)
27=J-20 Truck 8 Ft. Box(1981-86)
15=Wagoneer 4 Dr.(1981-83)
75=Wagoneer 4WD-4 Dr.(1984-86)

BODY
CJ=CJ-5, CJ-6, CJ-7, CJ-8, Scrambler(1981-86)
MJ=Comanche Pickup(1986)

STYLES
SJ=Wagoneer(1981-83), Grand Wagoneer(1984-86), Cherokee(1981-83), J-10, J-20(1981-86)
XJ=Wagoneer(1984-86), Cherokee(1984-86)

AR = Use as Required - = Non Illustrated Part P.A.R. = Paint as Required

« RETURN TO GROUP INDEX »

WHEEL MOUNTING, SPARE (SWING OUT) CJ-7,8, SCRAMBLER
Figure 22-400

81J22 400

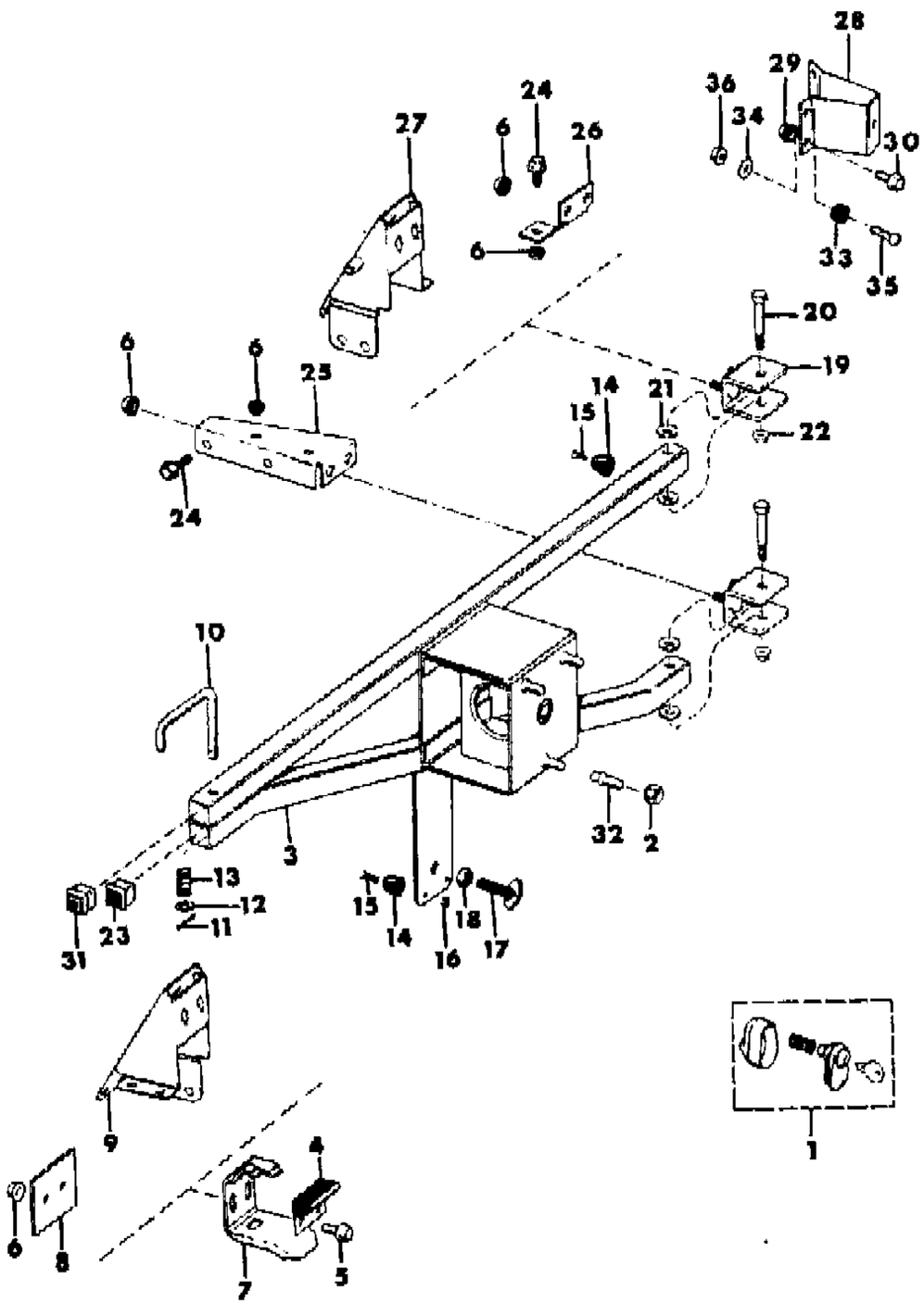

ITEM	PART NUMBER	QTY	BODY	MODEL	DESCRIPTION
27	J575 8814	1			REINFORCEMENT
28	J575 1175	1			BRACKET, Chrome
	J575 8350	1			Plain
29	J027 1190	4			NUT
30	J942 8638	4			BOLT, 3/8"-16x.63"
	J400 6850	4			1/4"-20x.63"
31	J400 7225	1			PLUG
32	J069 1830	3			STUD, Weld
33	J097 5636	1			BUMPER, EXPORT, Severe Use
34	SO44 6363	1			WASHER, EXPORT, Severe Use
35	J943 1975	1			SCREW, EXPORT, Severe Use
36	J400 3587	1			NUT, EXPORT, Severe Use

MODEL CODES

16=Cherokee 2 Dr.(1981-83)
17=Cherokee 2 Dr.(1981-83)
73=Cherokee 2WD-2 Dr.(1984-86)
74=Cherokee 2WD-4 Dr.(1984-86)
18=Cherokee 4 Dr.(1981-83)
77=Cherokee 4WD-2 Dr.(1984-86)
78=Cherokee 4WD-4 Dr.(1984-86)
85=CJ-5 (1981-83)
86=CJ-6(1981)
87=CJ-7(1981-86)
88=CJ-8, Scrambler(1981-86)
64=Comanche 2WD-6 Ft. Box(1986)
66=Comanche 2WD-7 Ft. Box(1986)
63=Comanche 4WD-6 Ft. Box(1986)
65=Comanche 4WD-7 Ft. Box(1986)
15=Grand Wagoneer 4 Dr.(1984-86)
25=J-10 Truck 7 Ft. Box(1981-84)
26=J10 Truck 8 Ft. Box(1981-86)
27=J-20 Truck 8 Ft. Box(1981-86)
15=Wagoneer 4 Dr.(1981-83)
75=Wagoneer 4WD-4 Dr.(1984-86)

BODY
CJ=CJ-5, CJ-6, CJ-7, CJ-8, Scrambler(1981-86)
MJ=Comanche Pickup(1986)

STYLES
SJ=Wagoneer(1981-83), Grand Wagoneer(1984-86), Cherokee(1981-83), J-10, J-20(1981-86)
XJ=Wagoneer(1984-86), Cherokee(1984-86)

AR = Use as Required - = Non Illustrated Part P.A.R. = Paint as Required

« RETURN TO GROUP INDEX

WHEEL MOUNTING, SPARE WITH WORLD CAB (EXPORT) CJ-7,8
Figure 22-500

81J22 500

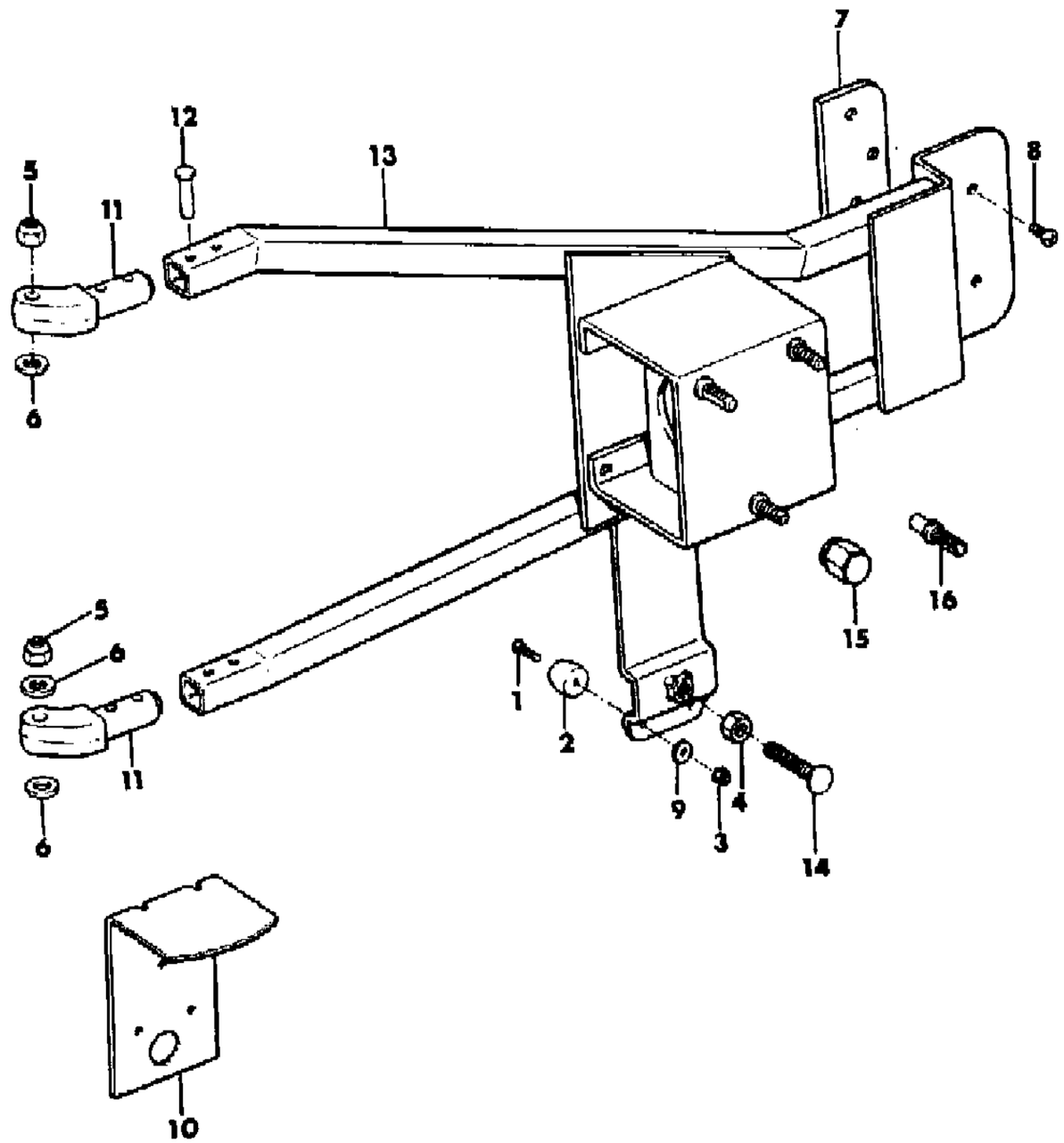

ITEM	PART NUMBER	QTY	BODY	MODEL	DESCRIPTION
1	J096 8734	2			BUMPER, LHD Less Blackout Lights
	J097 5636	2			LHD, With Blackout Lights
	J096 8734	2			RHD
2	J015 9947	2			SCREW, LHD, Less Blackout Lights
	J943 975	2			LHD, With Blackout Lights
	J015 9947	2			RHD
3	J027 1166	2			NUT, LHD, Less Blackout Lights
	J400 3587	2			LHD, With Blackout Lights
	J027 1166	2			RHD
4	J012 0238	1			NUT
5	J400 5739	2			NUT: 1982 ***
	J805 2458	2			With Blackout Lights
6	J400 7070	3			WASHER
7	J805 2220	1			PLATE
8	J400 6986	2			SCREW
9	S044 6363	2			WASHER, LHD, With Blackout Lights
10	J805 2261	1			BRACKET
	J805 2394	1			Economic Commission of Europe
11	J805 2197	2			ARM
12	J400 6979	4			RIVET
13	J805 2142	1			CARRIER, Tire, LHD
	J805 2136	1			RHD
14	J097 2773	1			BOLT
15	J400 5694	3			NUT, Chrome
	J063 5516	3			Black
16	J069 1830	3			STUD, Weld

MODEL CODES

16=Cherokee 2 Dr.(1981-83)	78=Cherokee 4WD-4 Dr.(1984-86)	64=Comanche 2WD-6 Ft. Box(1986)	25=J-10 Truck 7 Ft. Box(1981-84)
17=Cherokee 2 Dr.(1981-83)	85=CJ-5 (1981-83)	66=Comanche 2WD-7 Ft. Box(1986)	26=J10 Truck 8 Ft. Box(1981-86)
73=Cherokee 2WD-2 Dr.(1984-86)	86=CJ-6(1981)	63=Comanche 4WD-6 Ft. Box(1986)	27=J-20 Truck 8 Ft. Box(1981-86)
74=Cherokee 2WD-4 Dr.(1984-86)	87=CJ-7(1981-86)	65=Comanche 4WD-7 Ft. Box(1986)	15=Wagoneer 4 Dr.(1981-83)
18=Cherokee 4 Dr.(1981-83)	88=CJ-8, Scrambler(1981-86)	15=Grand Wagoneer 4 Dr.(1984-86)	75=Wagoneer 4WD-4 Dr.(1984-86)
77=Cherokee 4WD-2 Dr.(1984-86)			

BODY
CJ=CJ-5, CJ-6, CJ-7, CJ-8, Scrambler(1981-86)
MJ=Comanche Pickup(1986)

STYLES
SJ=Wagoneer(1981-83), Grand Wagoneer(1984-86), Cherokee(1981-83), J-10, J-20(1981-86)
XJ=Wagoneer(1984-86), Cherokee(1984-86)

AR = Use as Required - = Non Illustrated Part P.A.R. = Paint as Required

« RETURN TO GROUP INDEX

WHEEL MOUNTING, SPARE (ON SPORT BAR) CJ-8, SCRAMBLER
Figure 22-600

81J22 600

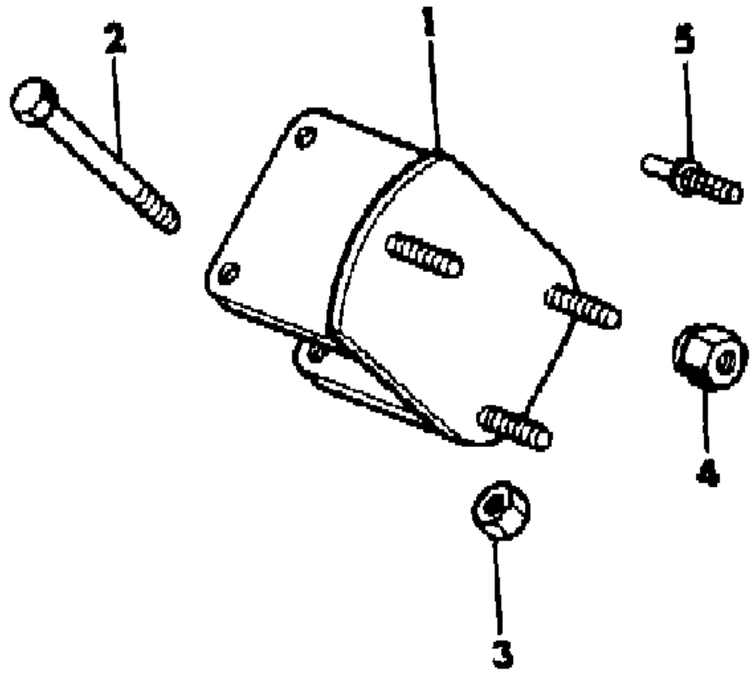

ITEM	PART NUMBER	QTY	BODY	MODEL	DESCRIPTION
1	J576 1752	1			BRACKET, Spare Tire
2	J400 7041	4			BOLT
3	J400 7043	4			NUT
4	J063 5516	3			NUT, Black
	J400 5694	3			Chrome
5	J069 1830	3			STUD

MODEL CODES
16=Cherokee 2 Dr.(1981-83)
17=Cherokee 2 Dr.(1981-83)
73=Cherokee 2WD-2 Dr.(1984-86)
74=Cherokee 2WD-4 Dr.(1984-86)
18=Cherokee 4 Dr.(1981-83)
77=Cherokee 4WD-2 Dr.(1984-86)
78=Cherokee 4WD-4 Dr.(1984-86)
85=CJ-5 (1981-83)
86=CJ-6(1981)
87=CJ-7(1981-86)
88=CJ-8, Scrambler(1981-86)
64=Comanche 2WD-6 Ft. Box(1986)
66=Comanche 2WD-7 Ft. Box(1986)
63=Comanche 4WD-6 Ft. Box(1986)
65=Comanche 4WD-7 Ft. Box(1986)
15=Grand Wagoneer 4 Dr.(1984-86)
25=J-10 Truck 7 Ft. Box(1981-84)
26=J10 Truck 8 Ft. Box(1981-86)
27=J-20 Truck 8 Ft. Box(1981-86)
15=Wagoneer 4 Dr.(1981-83)
75=Wagoneer 4WD-4 Dr.(1984-86)

BODY
CJ=CJ-5, CJ-6, CJ-7, CJ-8, Scrambler(1981-86)
MJ=Comanche Pickup(1986)

STYLES
SJ=Wagoneer(1981-83), Grand Wagoneer(1984-86), Cherokee(1981-83), J-10, J-20(1981-86)
XJ=Wagoneer(1984-86), Cherokee(1984-86)

AR = Use as Required - = Non Illustrated Part P.A.R. = Paint as Required

« RETURN TO GROUP INDEX

JACK AND MOUNTING CJ-5,6,7,8
Figure 22-700

81J22 700

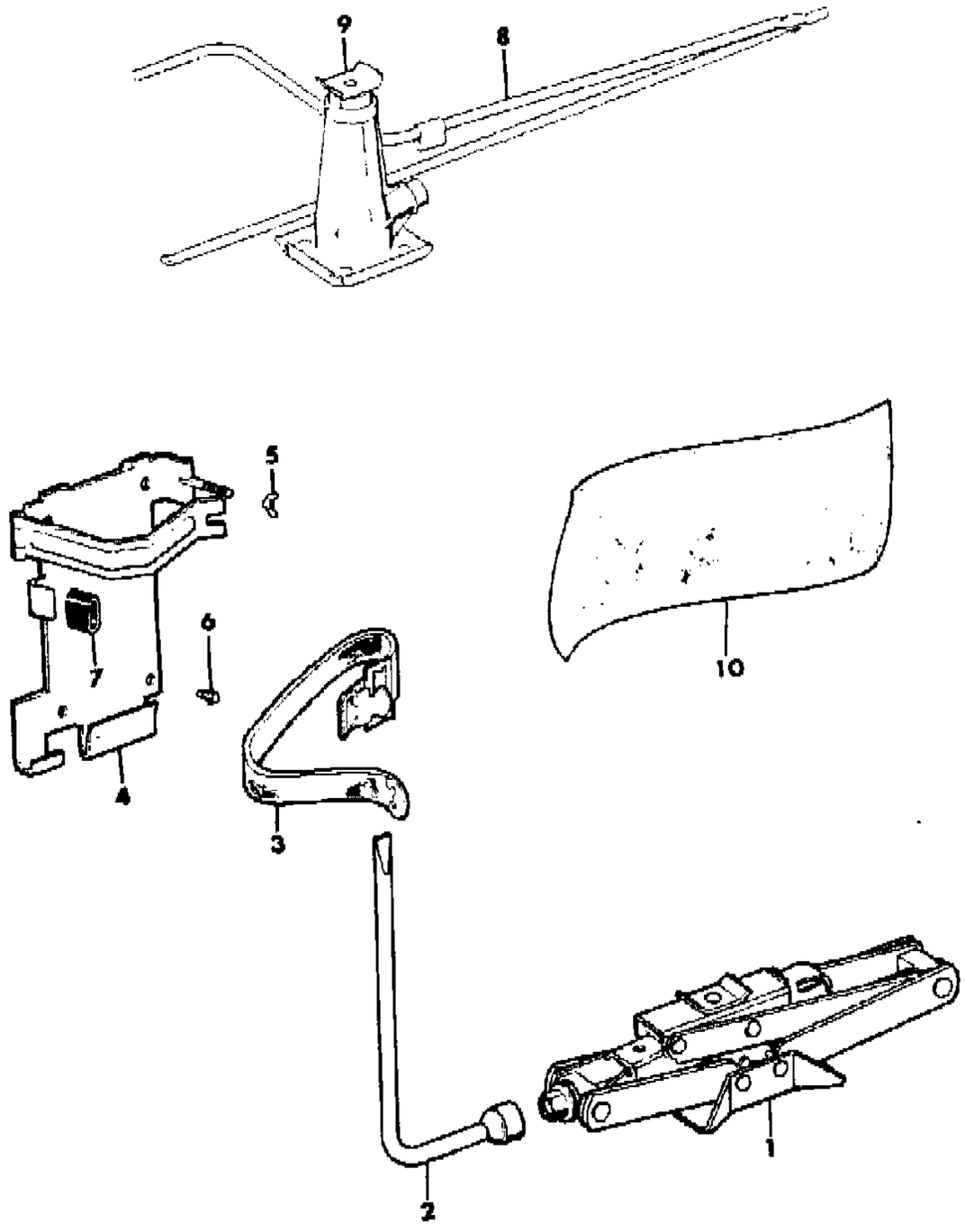

ITEM	PART NUMBER	QTY	BODY	MODEL	DESCRIPTION
1	J535 8493	1			JACK, Scissor
2	J063 5517	1			WRENCH, Lug
3	J546 0431	1			STRAP
4	J575 1669	1			BRACKET ASSEMBLY ***
	J576 4619	1			Export, Australian Design Rules
5	S014 2745	1			NUT, Wing
6	J400 5063	4			SCREW
7	J096 1095	1			SLEEVE
8	J535 4665	1			HANDLE, Jack
	J576 4648	1			Export, Australian Design Rules
9	J525 4439	1			JACK, Screw
	J535 4439	1			Export, Australian Design Rules, Screw
	J805 1797	1			Export, Hydraulic
10	J546 8887	1			BAG, Jack

MODEL CODES

16=Cherokee 2 Dr.(1981-83)
17=Cherokee 2 Dr.(1981-83)
73=Cherokee 2WD-2 Dr.(1984-86)
74=Cherokee 2WD-4 Dr.(1984-86)
18=Cherokee 4 Dr.(1981-83)
77=Cherokee 4WD-2 Dr.(1984-86)
78=Cherokee 4WD-4 Dr.(1984-86)
85=CJ-5 (1981-83)
86=CJ-6(1981)
87=CJ-7(1981-86)
88=CJ-8, Scrambler(1981-86)
64=Comanche 2WD-6 Ft. Box(1986)
66=Comanche 2WD-7 Ft. Box(1986)
63=Comanche 4WD-6 Ft. Box(1986)
65=Comanche 4WD-7 Ft. Box(1986)
15=Grand Wagoneer 4 Dr.(1984-86)
25=J-10 Truck 7 Ft. Box(1981-84)
26=J10 Truck 8 Ft. Box(1981-86)
27=J-20 Truck 8 Ft. Box(1981-86)
15=Wagoneer 4 Dr.(1981-83)
75=Wagoneer 4WD-4 Dr.(1984-86)

BODY
CJ=CJ-5, CJ-6, CJ-7, CJ-8, Scrambler(1981-86)
MJ=Comanche Pickup(1986)

STYLES
SJ=Wagoneer(1981-83), Grand Wagoneer(1984-86), Cherokee(1981-83), J-10, J-20(1981-86)
XJ=Wagoneer(1984-86), Cherokee(1984-86)

AR = Use as Required - = Non Illustrated Part P.A.R. = Paint as Required

« RETURN TO GROUP INDEX

WHEELS, CAPS, COVERS AND WEIGHTS XJ CHEROKEE, XJ WAGONEER, COMANCHE
Figure 22-800

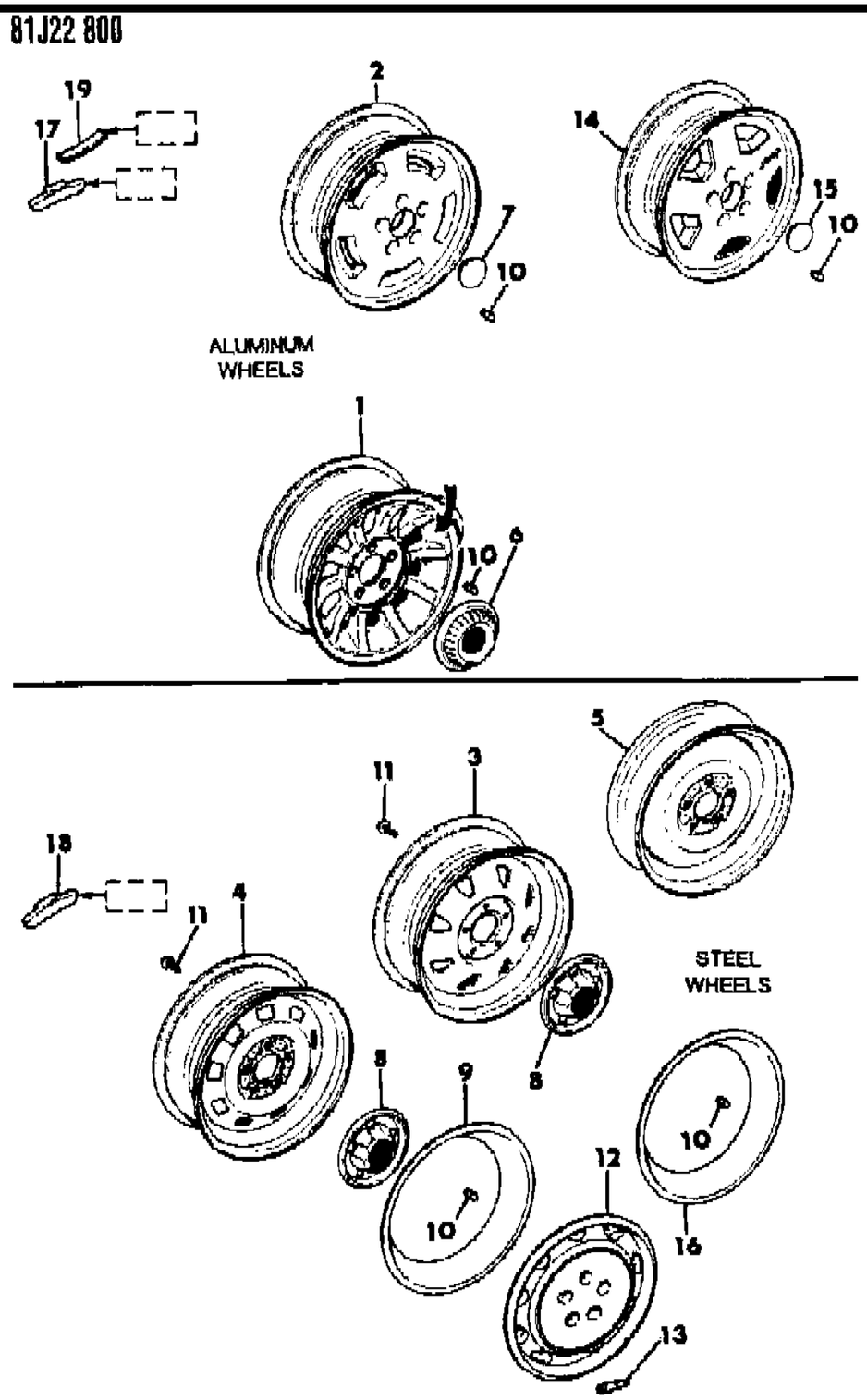

ITEM	PART NUMBER	QTY	BODY	MODEL	DESCRIPTION
1	5200 0025	AR			WHEEL, Aluminum
2	5200 0023	AR			WHEEL, Aluminum
3					WHEEL, Syled Steel
	5200 0655	AR			White, 1984-1985
	5200 2569	AR			White, 1986
	5200 2528	AR			Silver, 1984-1985
4	5200 0022	AR			WHEEL, Steel
5	5200 0019	AR			WHEEL, Compact Spare
6	5200 0452	4			CAP, Hub
7	5200 0708	4			CAP, Hub
8					CAP, Hub
	5200 0476	4			Chrome and Black
	5200 1179	4			Black
9					RING, Trim
	5200 0724	4			1984
	5200 1805	4			1985-1986
	5200 2530	4			RING, 1985
10	J400 6956	20			LUG NUT ***
11	3420 1489	12			SCREW
11	3420 1489	12			SCREW
12	J324 2730	4			COVER, Wheel
13	J323 6449	4			EXTENSION, Valve
14	5200 3403	AR			WHEEL, Aluminum
15	5200 2971	4			CAP, Hub
16	5200 2530	4			RING, Trim
17					WEIGHT, Wheel
	3200 0610	AR			0.5 oz.
	3200 0611	AR			1.0 oz.
	3200 0612	AR			1.5 oz.
	3200 0613	AR			2.0 oz.
	3200 0614	AR			2.5 oz.
	3200 0615	AR			3.0 oz.
18					WEIGHT, Wheel
	J316 5949	AR			0.5 oz.
	J313 1615	AR			1.0 oz.
	J316 5783	AR			1.5 oz.
	J312 3943	AR			2.0 oz.
	J316 5784	AR			2.5 oz.
19					WEIGHT, Wheel

MODEL CODES
16=Cherokee 2 Dr.(1981-83)
17=Cherokee 2 Dr.(1981-83)
73=Cherokee 2WD-2 Dr.(1984-86)
74=Cherokee 2WD-4 Dr.(1984-86)
18=Cherokee 4 Dr.(1981-83)
77=Cherokee 4WD-2 Dr.(1984-86)
78=Cherokee 4WD-4 Dr.(1984-86)
85=CJ-5 (1981-83)
86=CJ-6(1981)
87=CJ-7(1981-86)
88=CJ-8, Scrambler(1981-86)
64=Comanche 2WD-6 Ft. Box(1986)
66=Comanche 2WD-7 Ft. Box(1986)
63=Comanche 4WD-6 Ft. Box(1986)
65=Comanche 4WD-7 Ft. Box(1986)
15=Grand Wagoneer 4 Dr.(1984-86)
25=J-10 Truck 7 Ft. Box(1981-84)
26=J10 Truck 8 Ft. Box(1981-86)
27=J-20 Truck 8 Ft. Box(1981-86)
15=Wagoneer 4 Dr.(1981-83)
75=Wagoneer 4WD-4 Dr.(1984-86)

BODY
CJ=CJ-5, CJ-6, CJ-7, CJ-8, Scrambler(1981-86)
MJ=Comanche Pickup(1986)

STYLES
SJ=Wagoneer(1981-83), Grand Wagoneer(1984-86), Cherokee(1981-83), J-10, J-20(1981-86)
XJ=Wagoneer(1984-86), Cherokee(1984-86)

AR = Use as Required - = Non Illustrated Part P.A.R. = Paint as Required

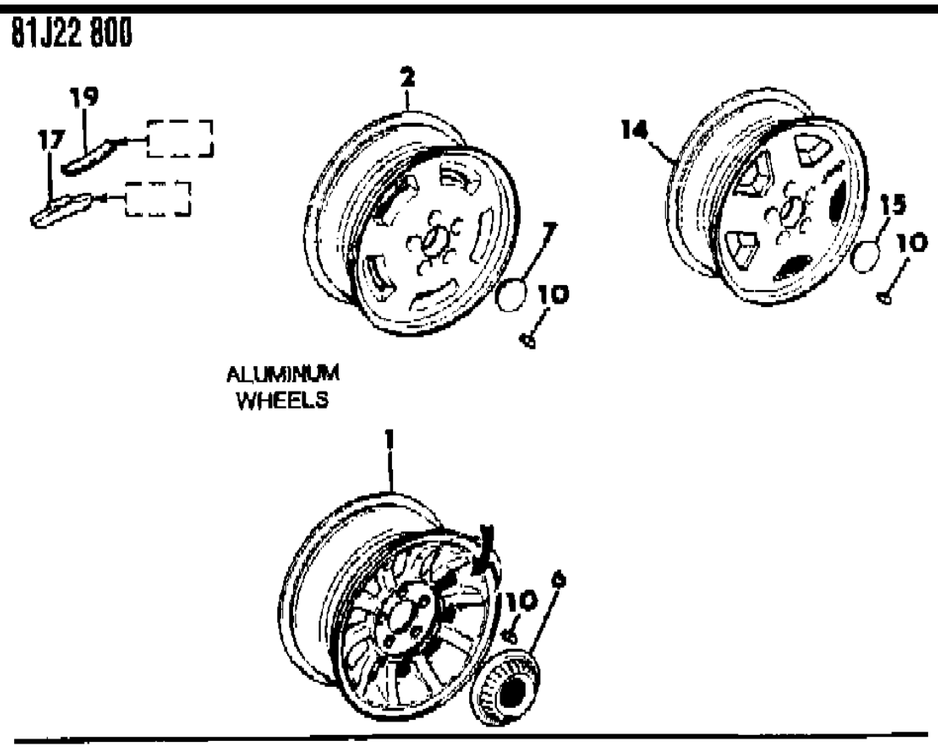

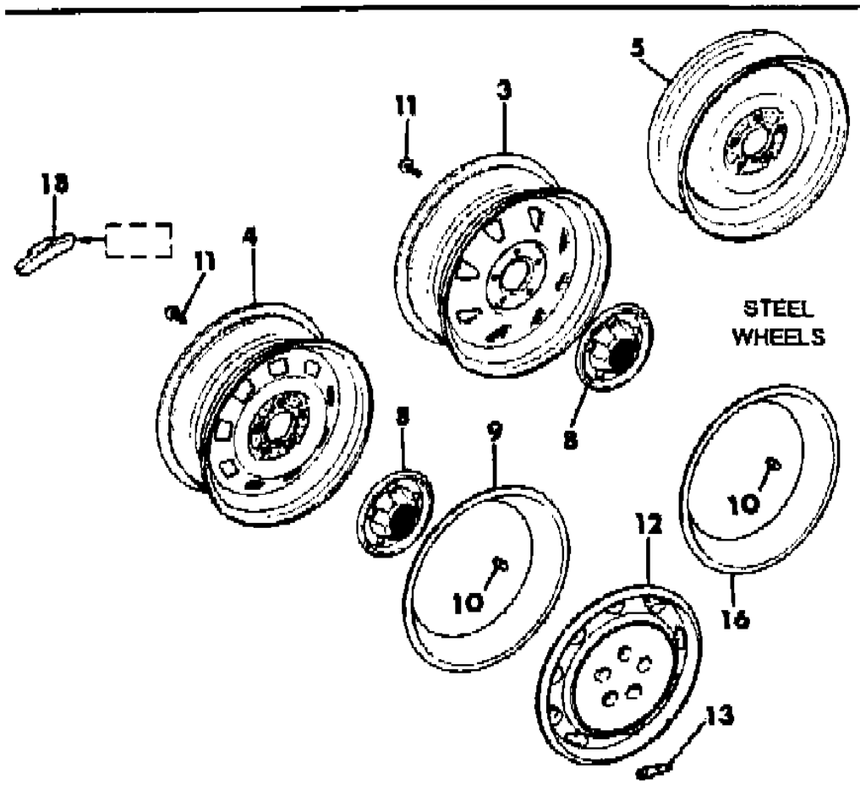

ITEM	PART NUMBER	QTY	BODY	MODEL	DESCRIPTION
	J322 6926	AR			0.5 oz.
	J322 6925	AR			1.0 oz.
	J322 6924	AR			1.5 oz.
	J322 6923	AR			2.0 oz.
	J322 6922	AR			2.5 oz.
	J322 6921	AR			3.0 oz.
	J322 6920	AR			3.5 oz.
	J322 6919	AR			4.0 oz.

MODEL CODES

16=Cherokee 2 Dr.(1981-83)	78=Cherokee 4WD-4 Dr.(1984-86)	64=Comanche 2WD-6 Ft. Box(1986)	25=J-10 Truck 7 Ft. Box(1981-84)
17=Cherokee 2 Dr.(1981-83)	85=CJ-5 (1981-83)	66=Comanche 2WD-7 Ft. Box(1986)	26=J10 Truck 8 Ft. Box(1981-86)
73=Cherokee 2WD-2 Dr.(1984-86)	86=CJ-6(1981)	63=Comanche 4WD-6 Ft. Box(1986)	27=J-20 Truck 8 Ft. Box(1981-86)
74=Cherokee 2WD-4 Dr.(1984-86)	87=CJ-7(1981-86)	65=Comanche 4WD-7 Ft. Box(1986)	15=Wagoneer 4 Dr.(1981-83)
18=Cherokee 4 Dr.(1981-83)	88=CJ-8, Scrambler(1981-86)	15=Grand Wagoneer 4 Dr.(1984-86)	75=Wagoneer 4WD-4 Dr.(1984-86)
77=Cherokee 4WD-2 Dr.(1984-86)			

BODY
CJ=CJ-5, CJ-6, CJ-7, CJ-8, Scrambler(1981-86)
MJ=Comanche Pickup(1986)

STYLES
SJ=Wagoneer(1981-83), Grand Wagoneer(1984-86), Cherokee(1981-83), J-10, J-20(1981-86)
XJ=Wagoneer(1984-86), Cherokee(1984-86)

AR = Use as Required - = Non Illustrated Part P.A.R. = Paint as Required

WHEEL MOUNTING SPARE (INSIDE) XJ CHEROKEE, XJ WAGONEER
Figure 22-900

81J22 900

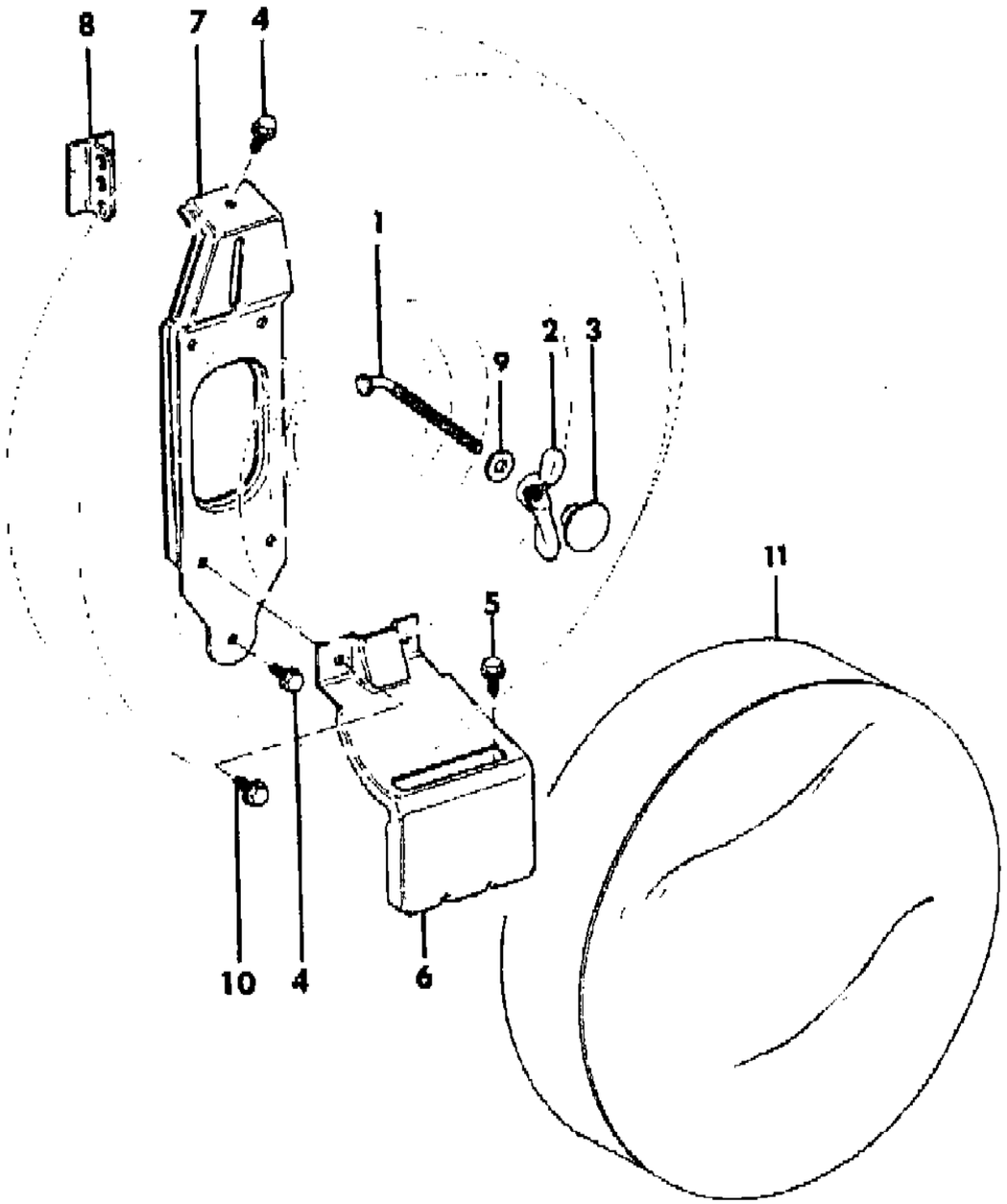

ITEM	PART NUMBER	QTY	BODY	MODEL	DESCRIPTION
1	5200 0731	1			ROD, Tire Hold Down
2	5200 0732	1			NUT, 1984-1985
	5200 1643	1			1986
3	5200 0733	1			CAP, Rod
4	3420 1408	6			BOLT
5	1150 0100	2			BOLT
6	5500 0859	1			BRACKET, Mounting
7	5500 2009	1			BRACE, Tire
8	5500 3494	1			BRACKET
9	1150 0324	1			WASHER
10	3420 1610	2			SCREW
11					COVER, Spare Tire
	5500 1534	1			Almond Vinyl, For T125 Tire
	5500 4408	1			Almond Vinyl, For P195 Tire
	5500 4408	1			Almond Vinyl, For P205 Tire
	5500 4412	1			Almond Vinyl, For P215 Tire
	5500 6279	1			Garnet Carpet, For T125 Tire
	5500 4419	1			Garnet Carpet, For P205 Tire
	5500 4537	1			Garnet Vinyl, For T125 Tire
	5500 4409	1			Garnet Vinyl, For P195 Tire
	5500 7260	1			Garnet Vinyl, For P205 Tire
	5500 4413	1			Garnet Vinyl, For P215 Tire
	5505 783	1			Honey Carpet, For T125 Tire
	5505 785	1			Honey Carpet, For P205 Tire
	5500 5780	1			Honey Vinyl, For T125 Tire
	5500 5781	1			Honey Vinyl, For P205 Tire
	5505 782	1			Honey Vinyl, For P215 Tire
	5500 8077	1			Medium Blue Vinyl, For T125 Tire
	5500 8078	1			Medium Blue Vinyl, For P205 Tire
	5500 8080	1			Medium Blue Vinyl, For P215 Tire
	5506 280	1			Nutmeg Carpet, For T125 Tire
	5500 4420	1			Nutmeg Carpet, For P205 Tire
	5500 1536	1			Nutmeg Vinyl, For T125 Tire
	5500 4410	1			Nutmeg Vinyl, For P195 Tire
	5500 4410	1			Nutmeg Vinyl, For P205 Tire
	5500 4414	1			Nutmeg Vinyl, For P215 Tire
	5500 1535	1			Slate Blue Vinyl, For T125 Tire
	5500 4407	1			Slate Blue Vinyl, For P195 Tire
	5500 4407	1			Slate Blue Vinyl, For P205 Tire

MODEL CODES
16=Cherokee 2 Dr.(1981-83)
17=Cherokee 2 Dr.(1981-83)
73=Cherokee 2WD-2 Dr.(1984-86)
74=Cherokee 2WD-4 Dr.(1984-86)
18=Cherokee 4 Dr.(1981-83)
77=Cherokee 4WD-2 Dr.(1984-86)
78=Cherokee 4WD-4 Dr.(1984-86)
85=CJ-5 (1981-83)
86=CJ-6(1981)
87=CJ-7(1981-86)
88=CJ-8, Scrambler(1981-86)
64=Comanche 2WD-6 Ft. Box(1986)
66=Comanche 2WD-7 Ft. Box(1986)
63=Comanche 4WD-6 Ft. Box(1986)
65=Comanche 4WD-7 Ft. Box(1986)
15=Grand Wagoneer 4 Dr.(1984-86)
25=J-10 Truck 7 Ft. Box(1981-84)
26=J10 Truck 8 Ft. Box(1981-86)
27=J-20 Truck 8 Ft. Box(1981-86)
15=Wagoneer 4 Dr.(1981-83)
75=Wagoneer 4WD-4 Dr.(1984-86)

BODY
CJ=CJ-5, CJ-6, CJ-7, CJ-8, Scrambler(1981-86)
MJ=Comanche Pickup(1986)

STYLES
SJ=Wagoneer(1981-83), Grand Wagoneer(1984-86), Cherokee(1981-83), J-10, J-20(1981-86)
XJ=Wagoneer(1984-86), Cherokee(1984-86)

AR = Use as Required - = Non Illustrated Part P.A.R. = Paint as Required

WHEEL MOUNTING SPARE (INSIDE) XJ CHEROKEE, XJ WAGONEER
Figure 22-900

81J22 900

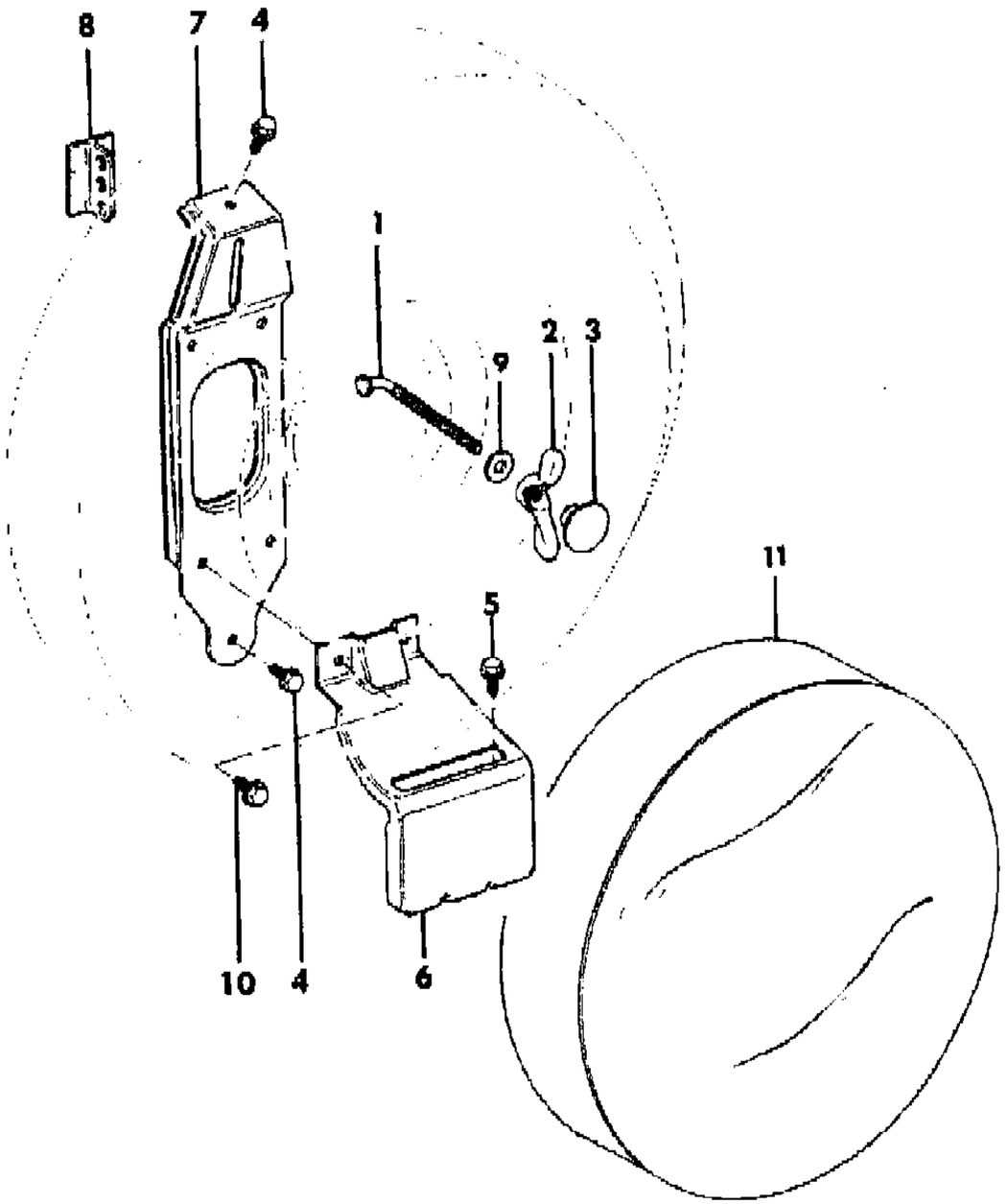

ITEM	PART NUMBER	QTY	BODY	MODEL	DESCRIPTION
	5500 4411	1			Slate Blue Vinyl, For P215 Tire
	5500 8076	1			Black Vinyl, For T125 Tire
	5500 8079	1			Black Vinyl, For P205 Tire
	5501 3181	1			Black Vinly, For P205 and P215 Tire
	5500 8081	1			Black Vinyl, For P215 Tire, 1986
	5501 3182	1			Garnet Vinyl, For P205 and P215 Tire, 1986
	5501 3183	1			Honey Vinyl, For P205 and P215 Tire, 1986

MODEL CODES

16=Cherokee 2 Dr.(1981-83)
17=Cherokee 2 Dr.(1981-83)
73=Cherokee 2WD-2 Dr.(1984-86)
74=Cherokee 2WD-4 Dr.(1984-86)
18=Cherokee 4 Dr.(1981-83)
77=Cherokee 4WD-2 Dr.(1984-86)
78=Cherokee 4WD-4 Dr.(1984-86)
85=CJ-5 (1981-83)
86=CJ-6(1981)
87=CJ-7(1981-86)
88=CJ-8, Scrambler(1981-86)
64=Comanche 2WD-6 Ft. Box(1986)
66=Comanche 2WD-7 Ft. Box(1986)
63=Comanche 4WD-6 Ft. Box(1986)
65=Comanche 4WD-7 Ft. Box(1986)
15=Grand Wagoneer 4 Dr.(1984-86)
25=J-10 Truck 7 Ft. Box(1981-84)
26=J10 Truck 8 Ft. Box(1981-86)
27=J-20 Truck 8 Ft. Box(1981-86)
15=Wagoneer 4 Dr.(1981-83)
75=Wagoneer 4WD-4 Dr.(1984-86)

BODY
CJ=CJ-5, CJ-6, CJ-7, CJ-8, Scrambler(1981-86)
MJ=Comanche Pickup(1986)

STYLES
SJ=Wagoneer(1981-83), Grand Wagoneer(1984-86), Cherokee(1981-83), J-10, J-20(1981-86)
XJ=Wagoneer(1984-86), Cherokee(1984-86)

AR = Use as Required - = Non Illustrated Part P.A.R. = Paint as Required

« RETURN TO GROUP INDEX

WHEEL MOUNTING SPARE (OUTSIDE) XJ CHEROKEE, XJ WAGONEER
Figure 22-1000

81J22 1000

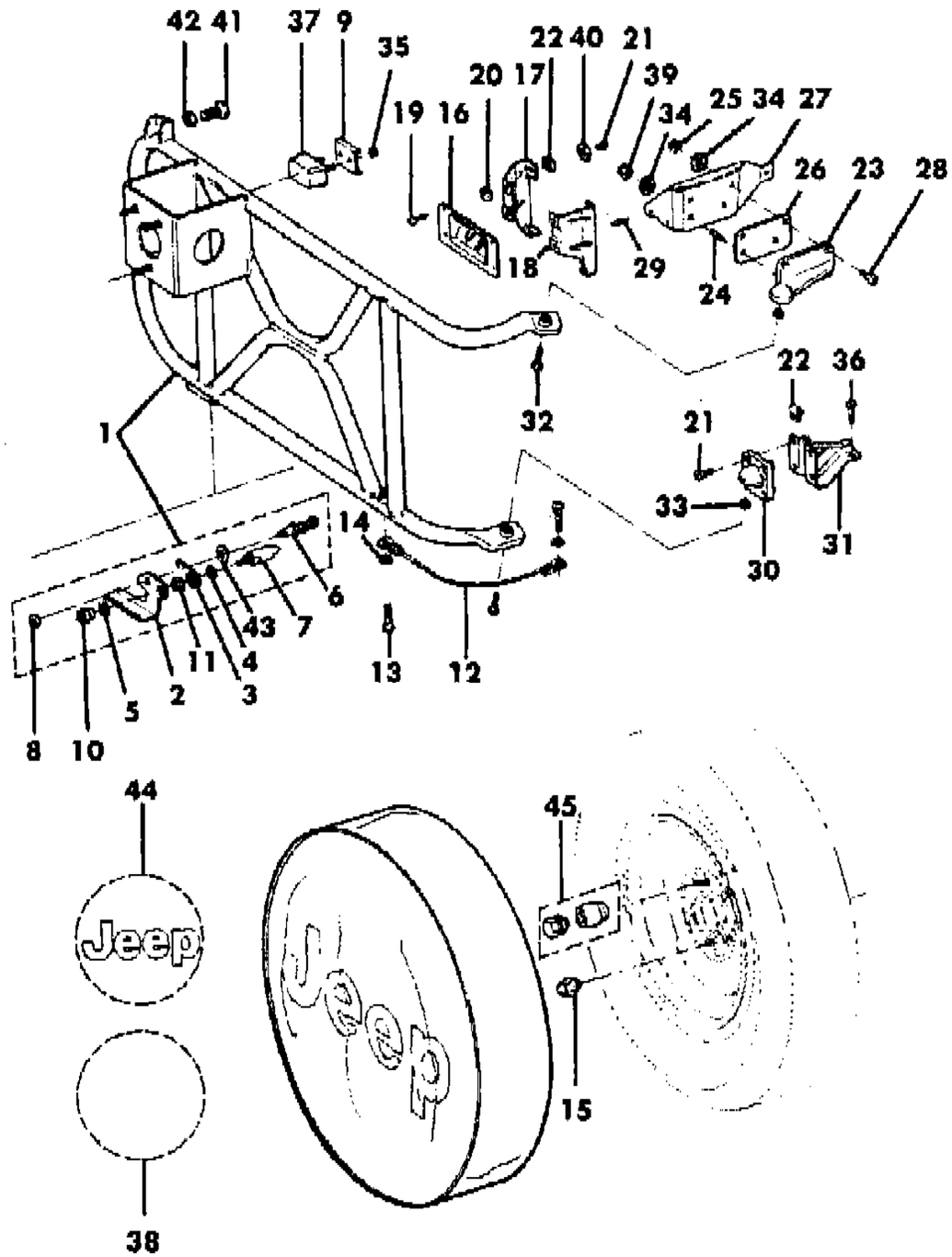

ITEM	PART NUMBER	QTY	BODY	MODEL	DESCRIPTION
1	5200 0207	1			CARRIER, TIRE
2	5200 0635	1			LEVER, Lock
3	5200 0633	1			SPRING, Lever
4	5200 0634	1			BUSHING, Lever
5	5200 0634	2			SPACER, Lever
6	5200 0344	1			LATCH, Lock Pin
7	5200 0632	1			PIN, Lock Pilot
8	3421 0580	1			NUT
9	5500 2000	1			REINFORCEMENT
10	5200 0926	1			RETAINER, Lever
11	5200 0927	1			SLEEVE, Lever
12	5200 1414	1			CABLE, Carrier
13	3420 1583	1			BOLT
14	1150 0324	2			WASHER
15	J400 6956	2			NUT, Lug
16	5200 0343	1			PLATE, Latch
17	5200 0341	1			REINFORCEMENT
18	5200 0340	1			REINFORCEMENT
19	3420 2183	4			BOLT
20	1150 3714	4			NUT
21	3420 1596	6			BOLT
22	1150 0660	AR			NUT
23	5200 0337	1			BRACKET, Hinge
24	3420 1623	2			STUD
25	J303 4037	2			NUT
26	5200 0686	1			GASKET
27	5500 3345	1			REINFORCEMENT
28	3420 1620	2			BOLT
29	3420 1035	3			RIVET
30	5200 0338	1			BRACKET, Hinge
31	5200 0649	1			REINFORCEMENT
32	3420 1779	2			BOLT
33	5200 0985	AR			SHIM ***
34	J400 6826	4			WASHER
35	1150 2702	2			NUT
36	3420 1766	4			SCREW
37	5500 2002	1			BUMPER, Carrier
38	5500 3387	1			COVER, Spare Tire, For P195 and P205 Tire
	8220 0151	1			For P215 Tire

MODEL CODES

16=Cherokee 2 Dr.(1981-83)
17=Cherokee 2 Dr.(1981-83)
73=Cherokee 2WD-2 Dr.(1984-86)
74=Cherokee 2WD-4 Dr.(1984-86)
18=Cherokee 4 Dr.(1981-83)
77=Cherokee 4WD-2 Dr.(1984-86)
78=Cherokee 4WD-4 Dr.(1984-86)
85=CJ-5 (1981-83)
86=CJ-6(1981)
87=CJ-7(1981-86)
88=CJ-8, Scrambler(1981-86)
64=Comanche 2WD-6 Ft. Box(1986)
66=Comanche 2WD-7 Ft. Box(1986)
63=Comanche 4WD-6 Ft. Box(1986)
65=Comanche 4WD-7 Ft. Box(1986)
15=Grand Wagoneer 4 Dr.(1984-86)
25=J-10 Truck 7 Ft. Box(1981-84)
26=J10 Truck 8 Ft. Box(1981-86)
27=J-20 Truck 8 Ft. Box(1981-86)
15=Wagoneer 4 Dr.(1981-83)
75=Wagoneer 4WD-4 Dr.(1984-86)

BODY
CJ=CJ-5, CJ-6, CJ-7, CJ-8, Scrambler(1981-86)
MJ=Comanche Pickup(1986)

STYLES
SJ=Wagoneer(1981-83), Grand Wagoneer(1984-86), Cherokee(1981-83), J-10, J-20(1981-86)
XJ=Wagoneer(1984-86), Cherokee(1984-86)

AR = Use as Required - = Non Illustrated Part P.A.R. = Paint as Required

WHEEL MOUNTING SPARE (OUTSIDE) XJ CHEROKEE, XJ WAGONEER
Figure 22-1000

81J22 1000

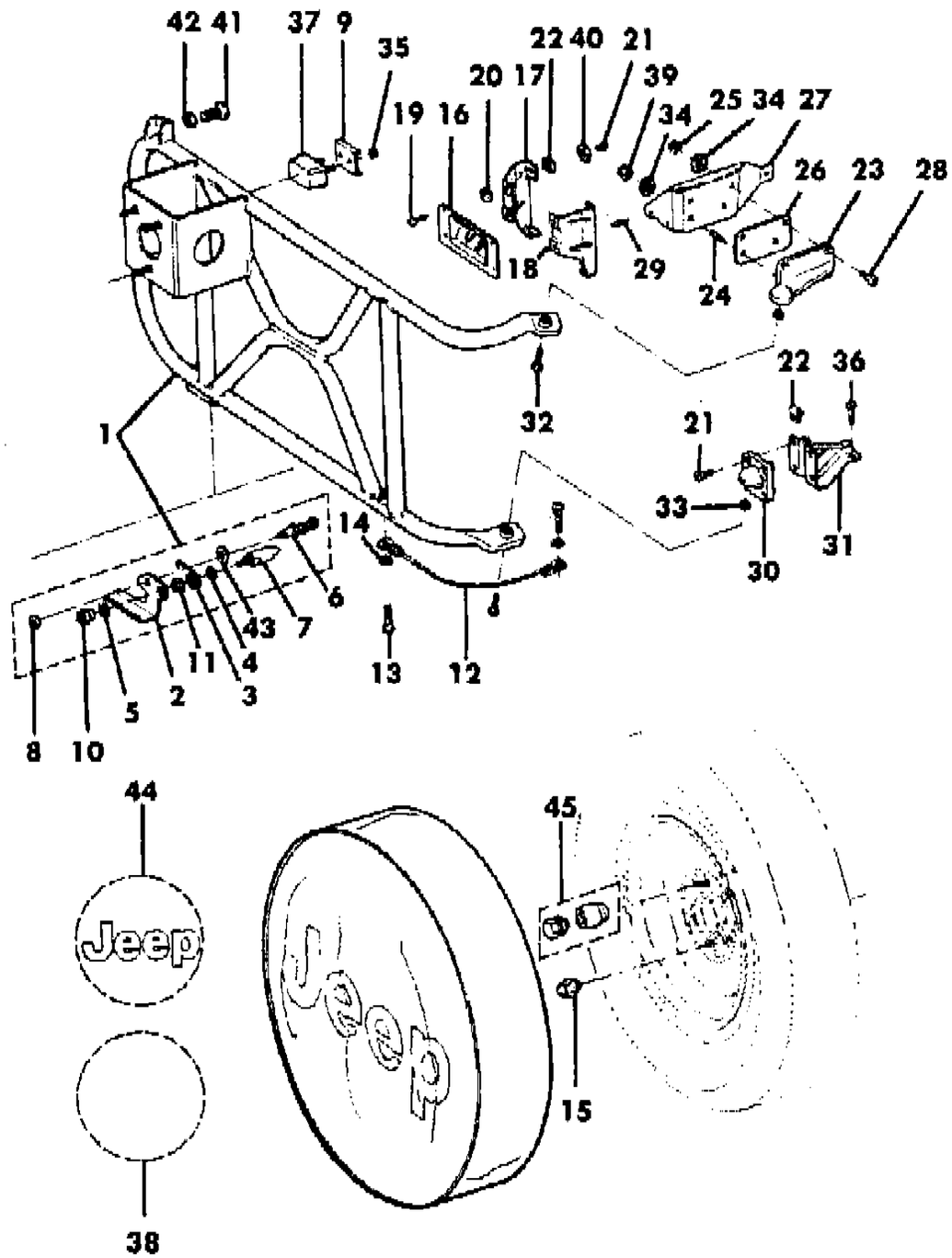

ITEM	PART NUMBER	QTY	BODY	MODEL	DESCRIPTION
39	1150 1729	2			NUT
40	1150 0323	2			WASHER
41	3420 1900				SCREW
42	1150 0749	1			NUT
43	J013 1016	1			WASHER
44	5500 9229	1			COVER, Spare Tire (Jeep), For P205 Tire, 1986
45	8350 1152	1			LOCK, Spare Wheel

MODEL CODES

16=Cherokee 2 Dr.(1981-83)
17=Cherokee 2 Dr.(1981-83)
73=Cherokee 2WD-2 Dr.(1984-86)
74=Cherokee 2WD-4 Dr.(1984-86)
18=Cherokee 4 Dr.(1981-83)
77=Cherokee 4WD-2 Dr.(1984-86)
78=Cherokee 4WD-4 Dr.(1984-86)
85=CJ-5 (1981-83)
86=CJ-6(1981)
87=CJ-7(1981-86)
88=CJ-8, Scrambler(1981-86)
64=Comanche 2WD-6 Ft. Box(1986)
66=Comanche 2WD-7 Ft. Box(1986)
63=Comanche 4WD-6 Ft. Box(1986)
65=Comanche 4WD-7 Ft. Box(1986)
15=Grand Wagoneer 4 Dr.(1984-86)
25=J-10 Truck 7 Ft. Box(1981-84)
26=J10 Truck 8 Ft. Box(1981-86)
27=J-20 Truck 8 Ft. Box(1981-86)
15=Wagoneer 4 Dr.(1981-83)
75=Wagoneer 4WD-4 Dr.(1984-86)

BODY
CJ=CJ-5, CJ-6, CJ-7, CJ-8, Scrambler(1981-86)
MJ=Comanche Pickup(1986)

STYLES
SJ=Wagoneer(1981-83), Grand Wagoneer(1984-86), Cherokee(1981-83), J-10, J-20(1981-86)
XJ=Wagoneer(1984-86), Cherokee(1984-86)

AR = Use as Required - = Non Illustrated Part P.A.R. = Paint as Required

« RETURN TO GROUP INDEX

WHEEL MOUNTING, SPARE COMANCHE
Figure 22-1100

81J22 1100

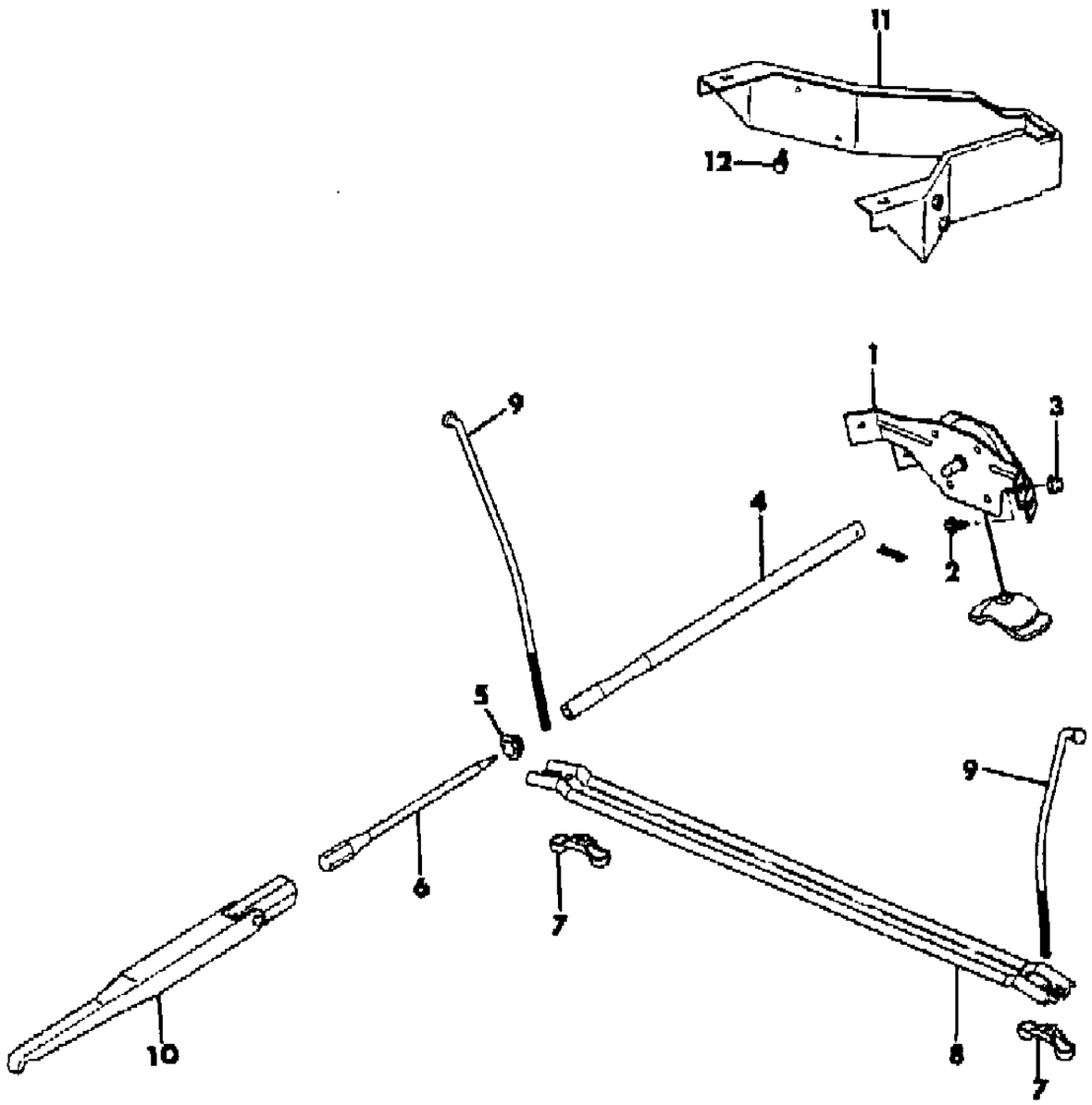

ITEM	PART NUMBER	QTY	BODY	MODEL	DESCRIPTION
1	5200 1859	1			HOIST, Spare Tire ***
2	3421 0193	4			SCREW
3	3420 1575	4			NUT
4	5200 3128	1			TUBE, Winch, With 6 Ft. Pickup Box
	5200 1286	1			With 7 Ft. Pickup Box
5	J400 6847	1			BUSHING
6	5200 1288	1			ADAPTER, Lug Wrench To Tube
7	5200 1643	2			NUT
8	5200 2677	1			BAR, Mounting
9	5200 2676	2			BOLT
10	5200 0222	1			WRENCH, Lug
11	5200 3075	1			BRACKET, With 6 Ft. Pickup Box
12	3420 1897	4			BOLT

MODEL CODES

16=Cherokee 2 Dr.(1981-83)	78=Cherokee 4WD-4 Dr.(1984-86)	64=Comanche 2WD-6 Ft. Box(1986)	25=J-10 Truck 7 Ft. Box(1981-84)
17=Cherokee 2 Dr.(1981-83)	85=CJ-5 (1981-83)	66=Comanche 2WD-7 Ft. Box(1986)	26=J10 Truck 8 Ft. Box(1981-86)
73=Cherokee 2WD-2 Dr.(1984-86)	86=CJ-6(1981)	63=Comanche 4WD-6 Ft. Box(1986)	27=J-20 Truck 8 Ft. Box(1981-86)
74=Cherokee 2WD-4 Dr.(1984-86)	87=CJ-7(1981-86)	65=Comanche 4WD-7 Ft. Box(1986)	15=Wagoneer 4 Dr.(1981-83)
18=Cherokee 4 Dr.(1981-83)	88=CJ-8, Scrambler(1981-86)	15=Grand Wagoneer 4 Dr.(1984-86)	75=Wagoneer 4WD-4 Dr.(1984-86)
77=Cherokee 4WD-2 Dr.(1984-86)			

BODY
CJ=CJ-5, CJ-6, CJ-7, CJ-8, Scrambler(1981-86)
MJ=Comanche Pickup(1986)

STYLES
SJ=Wagoneer(1981-83), Grand Wagoneer(1984-86), Cherokee(1981-83), J-10, J-20(1981-86)
XJ=Wagoneer(1984-86), Cherokee(1984-86)

AR = Use as Required - = Non Illustrated Part P.A.R. = Paint as Required

« RETURN TO GROUP INDEX

JACK AND MOUNTING XJ CHEROKEE, XJ WAGONEER, COMANCHE
Figure 22-1200

81J22 1200

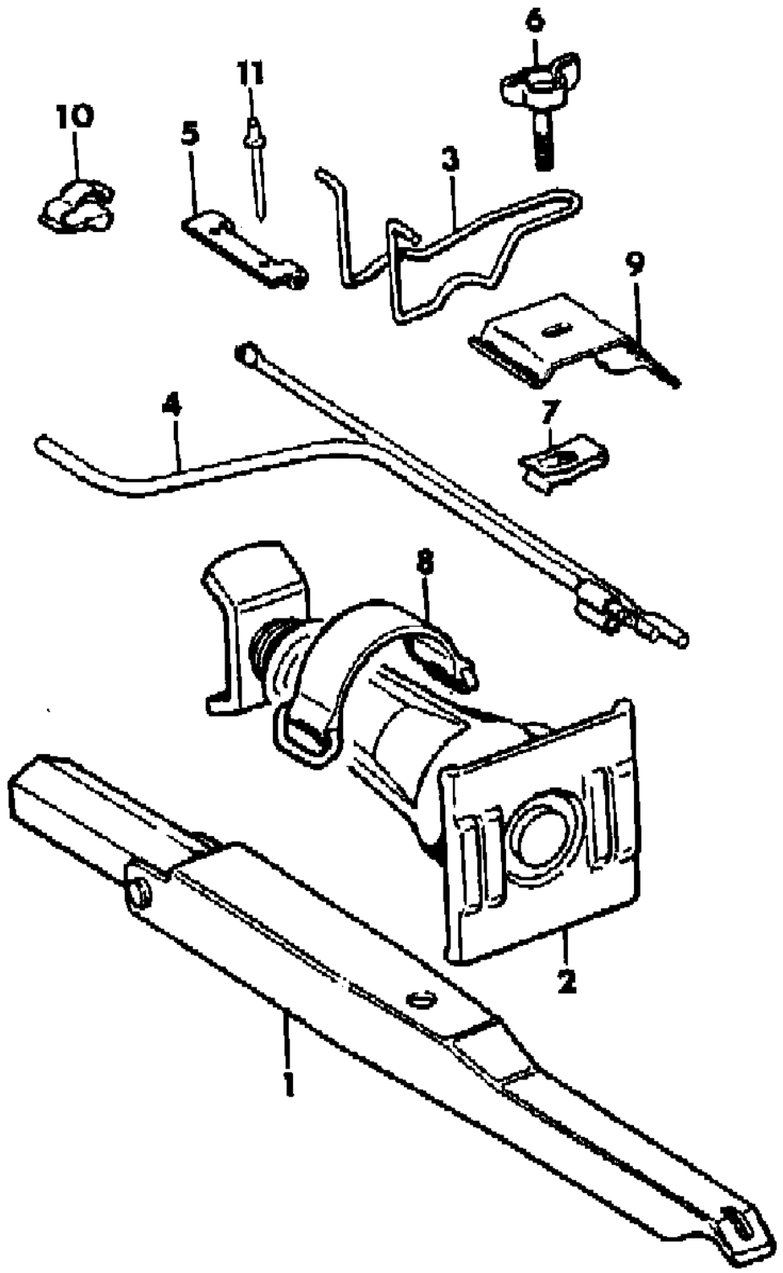

ITEM	PART NUMBER	QTY	BODY	MODEL	DESCRIPTION
1	5200 0222	1			WRENCH, Lug
2	J535 4439	1			JACK
3	5200 1186	1	XJ		BRACKET, Jack
4	5200 0221	1	XJ		HANDLE, Jack
	5200 1316	1	MJ		
5	5200 1202	1	XJ		CLIP, Handle
6	5200 0354	1			STUD
7	1150 0660	1	MJ		NUT
8	5200 2077	1	MJ		STRAP, Hold Down
9	5200 1317	1	MJ		BRACKET, Jack
10	3420 2362	1	MJ		CLIP
11	3420 1684	2	XJ		RIVET

MODEL CODES
16=Cherokee 2 Dr.(1981-83)
17=Cherokee 2 Dr.(1981-83)
73=Cherokee 2WD-2 Dr.(1984-86)
74=Cherokee 2WD-4 Dr.(1984-86)
18=Cherokee 4 Dr.(1981-83)
77=Cherokee 4WD-2 Dr.(1984-86)
78=Cherokee 4WD-4 Dr.(1984-86)
85=CJ-5 (1981-83)
86=CJ-6(1981)
87=CJ-7(1981-86)
88=CJ-8, Scrambler(1981-86)
64=Comanche 2WD-6 Ft. Box(1986)
66=Comanche 2WD-7 Ft. Box(1986)
63=Comanche 4WD-6 Ft. Box(1986)
65=Comanche 4WD-7 Ft. Box(1986)
15=Grand Wagoneer 4 Dr.(1984-86)
25=J-10 Truck 7 Ft. Box(1981-84)
26=J10 Truck 8 Ft. Box(1981-86)
27=J-20 Truck 8 Ft. Box(1981-86)
15=Wagoneer 4 Dr.(1981-83)
75=Wagoneer 4WD-4 Dr.(1984-86)

BODY
CJ=CJ-5, CJ-6, CJ-7, CJ-8, Scrambler(1981-86)
MJ=Comanche Pickup(1986)

STYLES
SJ=Wagoneer(1981-83), Grand Wagoneer(1984-86), Cherokee(1981-83), J-10, J-20(1981-86)
XJ=Wagoneer(1984-86), Cherokee(1984-86)

AR = Use as Required - = Non Illustrated Part P.A.R. = Paint as Required

« RETURN TO GROUP INDEX

WHEELS, CAPS, COVERS AND WEIGHTS SJ CHEROKEE, SJ WAGONEER, J10, J20
Figure 22-1300

81J22 1300

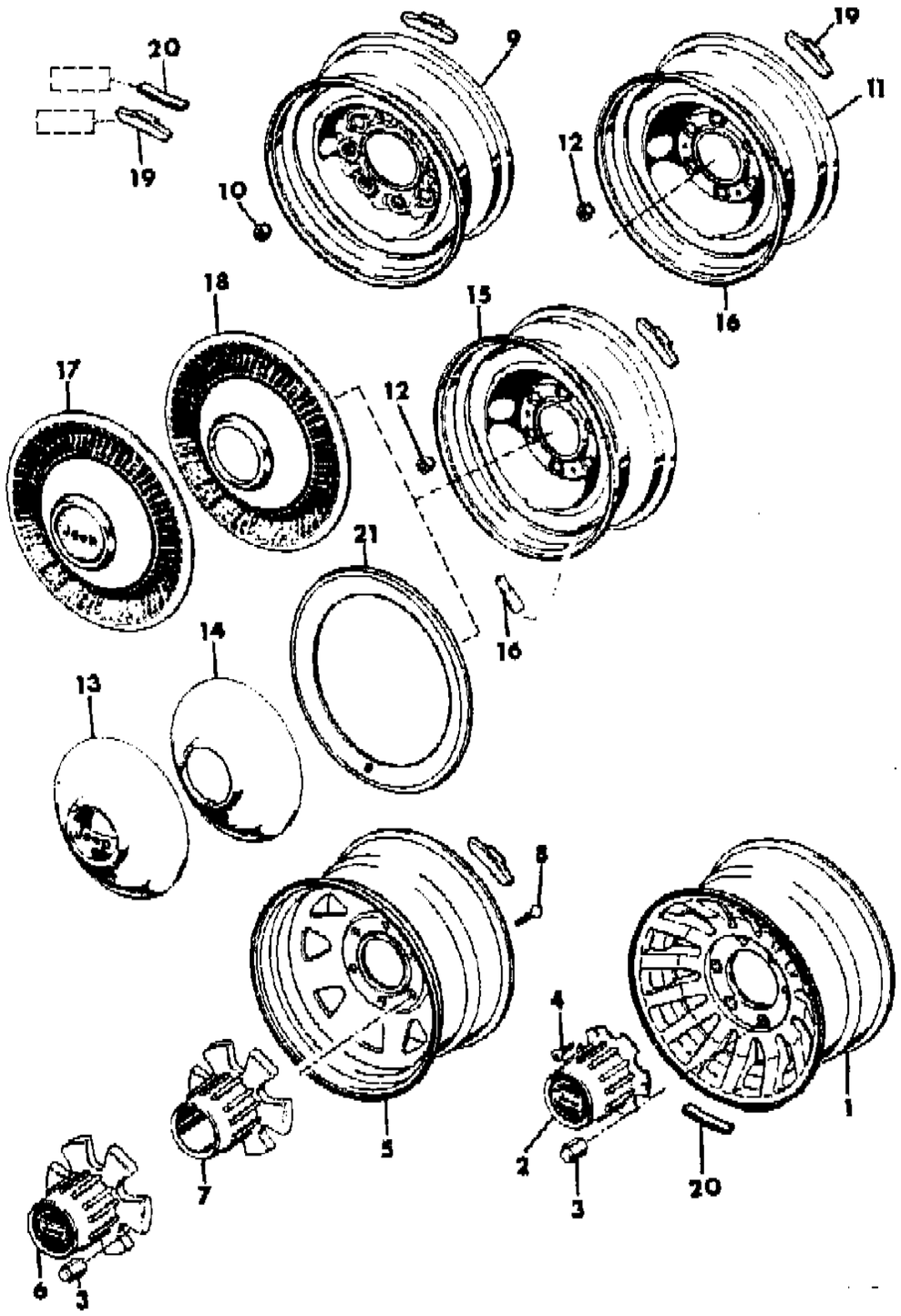

ITEM	PART NUMBER	QTY	BODY	MODEL	DESCRIPTION
1					WHEEL, Aluminum
	J536 5093	AR			Gold
	J535 9797	AR			Silver
2					CAP, Hub
	J536 5094	4			Gold
	J536 1653	2			Silver, With manual locking hubs
	J536 1652	AR			Silver, Cap has 16 grooves around cylindrical surface
	J535 2792	AR			Silver, Cap has 32 grooves around cylindrical surface
3	J400 4844	20			NUT, Lug
4	J400 4867	12			SCREW
5					WHEEL, Styled Steel
	J535 7374	AR			Chrome, 15"x7"
	J536 3911	AR			Argent, 15"x7"
	J536 3031	AR			White, 15"x7"
	J535 9775	AR			Chrome, 15"x8"
	J536 1397	AR			White, 15"x8"
6					CAP, Hub
	J535 6482	AR			Chrome, Cap has 32 grooves around cylindrical surface
	J535 9807	AR			Painted, Cap has 32 grooves around cylindrical surface
	J536 4409	AR			Chrome, Cap has 16 grooves around cylindrical surface
7					CAP, Hub
	J535 1698	AR			Chrome, Cap has 32 grooves around cylindrical surface, with manual locking hubs
	J535 9806	AR			Painted, Cap has 32 grooves around cylindrical surface, with manual locking hubs
	J536 4408	AR			Chrome, Cap has 16 grooves around cylindrical surface, with manual locking hubs
8	J400 7001	12			SCREW
9					WHEEL, Steel
	J535 2776	AR			16"x6.5"
	J535 2272	AR			16.5"x6.0"
	J535 2639	AR			16.5"x6.8"
10	J400 4836	32			NUT, Lug
11	J590 2518	AR			WHEEL, Steel, 16"x5"
12	J400 4837	24			NUT, Lug
13	J535 2672	AR			CAP, Hub
14	J535 2267	AR			CAP, Hub, With manual locking hubs
15	J535 9101	AR			WHEEL, Steel
16	J535 5858	AR			EXTENSION, Valve

MODEL CODES

16=Cherokee 2 Dr.(1981-83)	78=Cherokee 4WD-4 Dr.(1984-86)	64=Comanche 2WD-6 Ft. Box(1986)	25=J-10 Truck 7 Ft. Box(1981-84)
17=Cherokee 2 Dr.(1981-83)	85=CJ-5 (1981-83)	66=Comanche 2WD-7 Ft. Box(1986)	26=J10 Truck 8 Ft. Box(1981-86)
73=Cherokee 2WD-2 Dr.(1984-86)	86=CJ-6(1981)	63=Comanche 4WD-6 Ft. Box(1986)	27=J-20 Truck 8 Ft. Box(1981-86)
74=Cherokee 2WD-4 Dr.(1984-86)	87=CJ-7(1981-86)	65=Comanche 4WD-7 Ft. Box(1986)	15=Wagoneer 4 Dr.(1981-83)
18=Cherokee 4 Dr.(1981-83)	88=CJ-8, Scrambler(1981-86)	15=Grand Wagoneer 4 Dr.(1984-86)	75=Wagoneer 4WD-4 Dr.(1984-86)
77=Cherokee 4WD-2 Dr.(1984-86)			

BODY
CJ=CJ-5, CJ-6, CJ-7, CJ-8, Scrambler(1981-86)
MJ=Comanche Pickup(1986)

STYLES
SJ=Wagoneer(1981-83), Grand Wagoneer(1984-86), Cherokee(1981-83), J-10, J-20(1981-86)
XJ=Wagoneer(1984-86), Cherokee(1984-86)

AR = Use as Required - = Non Illustrated Part P.A.R. = Paint as Required

« RETURN TO GROUP INDEX »

WHEELS, CAPS, COVERS AND WEIGHTS SJ CHEROKEE, SJ WAGONEER, J10, J20
Figure 22-1300

81J22 1300

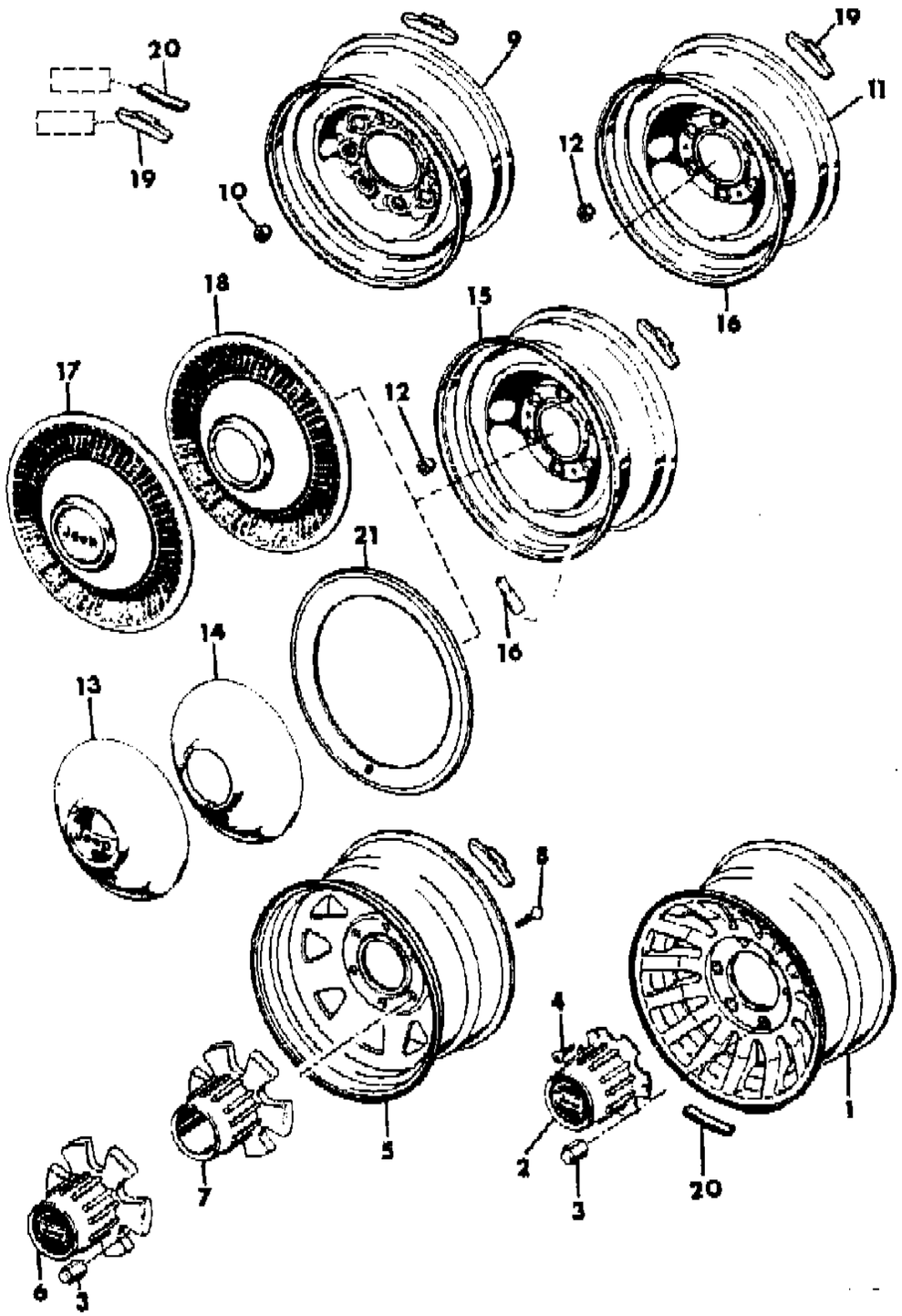

ITEM	PART NUMBER	QTY	BODY	MODEL	DESCRIPTION
17	J535 4752	AR			COVER, Wheel
18	J535 8281	AR			COVER, Wheel, With manual locking hubs
19					WEIGHT, WHEEL
	J812 8424	AR			1/4 oz.
	J316 5949	AR			1/2 oz.
	J313 1615	AR			1 oz.
	J316 5783	AR			1-1/2 oz.
	J312 3943	AR			2 oz.
	J316 5784	AR			2-1/2 oz.
	J812 8425	AR			3 oz.
	J812 8426	AR			3-1/2 oz.
	J535 6329	AR			4 oz.
20					WEIGHT, Wheel
	J322 6926	AR			1/2 oz.
	J322 6925	AR			1 oz.
	J322 6924	AR			1-1/2 oz.
	J322 6923	AR			2 oz.
	J322 6922	AR			2-1/2 oz.
	J322 6921	AR			3 oz.
	J322 6920	AR			3-1/2 oz.
	J322 6919	AR			4 oz.
21	J536 3880	4			RING, Trim

MODEL CODES
16=Cherokee 2 Dr.(1981-83)
17=Cherokee 2 Dr.(1981-83)
73=Cherokee 2WD-2 Dr.(1984-86)
74=Cherokee 2WD-4 Dr.(1984-86)
18=Cherokee 4 Dr.(1981-83)
77=Cherokee 4WD-2 Dr.(1984-86)
78=Cherokee 4WD-4 Dr.(1984-86)
85=CJ-5 (1981-83)
86=CJ-6(1981)
87=CJ-7(1981-86)
88=CJ-8, Scrambler(1981-86)
64=Comanche 2WD-6 Ft. Box(1986)
66=Comanche 2WD-7 Ft. Box(1986)
63=Comanche 4WD-6 Ft. Box(1986)
65=Comanche 4WD-7 Ft. Box(1986)
15=Grand Wagoneer 4 Dr.(1984-86)
25=J-10 Truck 7 Ft. Box(1981-84)
26=J10 Truck 8 Ft. Box(1981-86)
27=J-20 Truck 8 Ft. Box(1981-86)
15=Wagoneer 4 Dr.(1981-83)
75=Wagoneer 4WD-4 Dr.(1984-86)

BODY
CJ=CJ-5, CJ-6, CJ-7, CJ-8, Scrambler(1981-86)
MJ=Comanche Pickup(1986)

STYLES
SJ=Wagoneer(1981-83), Grand Wagoneer(1984-86), Cherokee(1981-83), J-10, J-20(1981-86)
XJ=Wagoneer(1984-86), Cherokee(1984-86)

AR = Use as Required - = Non Illustrated Part P.A.R. = Paint as Required

« RETURN TO GROUP INDEX

WHEEL MOUNTING, SPARE SJ CHEROKEE, SJ WAGONEER
Figure 22-1400

81J22 1400

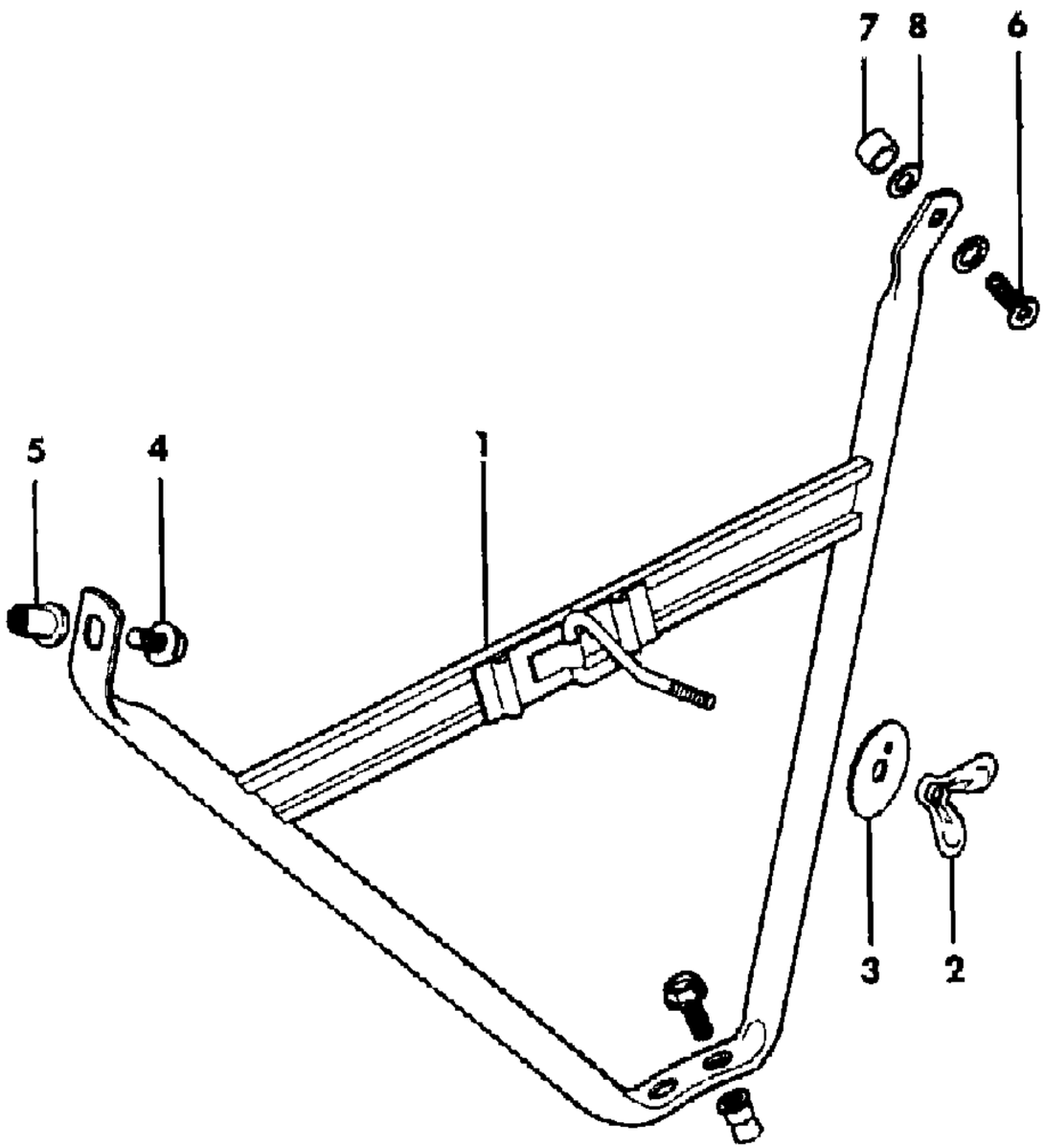

ITEM	PART NUMBER	QTY	BODY	MODEL	DESCRIPTION
1	J546 0123	1			FRAME, Mounting
2	J097 3780	1			NUT, Wing
3	J066 4277	1			PLATE
4	J400 3556	3			SCREW
5	J400 5818	3			NUT, Push
6	J400 5507	1			BOLT
7	J097 6555	1			SPACER
8	J013 1007	2			WASHER, .50" I.D.
	J400 1186	2			.75" I.D.

MODEL CODES

16=Cherokee 2 Dr.(1981-83)
17=Cherokee 2 Dr.(1981-83)
73=Cherokee 2WD-2 Dr.(1984-86)
74=Cherokee 2WD-4 Dr.(1984-86)
18=Cherokee 4 Dr.(1981-83)
77=Cherokee 4WD-2 Dr.(1984-86)
78=Cherokee 4WD-4 Dr.(1984-86)
85=CJ-5 (1981-83)
86=CJ-6(1981)
87=CJ-7(1981-86)
88=CJ-8, Scrambler(1981-86)
64=Comanche 2WD-6 Ft. Box(1986)
66=Comanche 2WD-7 Ft. Box(1986)
63=Comanche 4WD-6 Ft. Box(1986)
65=Comanche 4WD-7 Ft. Box(1986)
15=Grand Wagoneer 4 Dr.(1984-86)
25=J-10 Truck 7 Ft. Box(1981-84)
26=J10 Truck 8 Ft. Box(1981-86)
27=J-20 Truck 8 Ft. Box(1981-86)
15=Wagoneer 4 Dr.(1981-83)
75=Wagoneer 4WD-4 Dr.(1984-86)

BODY
CJ=CJ-5, CJ-6, CJ-7, CJ-8, Scrambler(1981-86)
MJ=Comanche Pickup(1986)

STYLES
SJ=Wagoneer(1981-83), Grand Wagoneer(1984-86), Cherokee(1981-83), J-10, J-20(1981-86)
XJ=Wagoneer(1984-86), Cherokee(1984-86)

AR = Use as Required - = Non Illustrated Part P.A.R. = Paint as Required

« RETURN TO GROUP INDEX

WHEEL MOUNTING, SPARE UNDERBODY SJ CHEROKEE, SJ WAGONEER, J10, J20
Figure 22-1500

81J22 1500

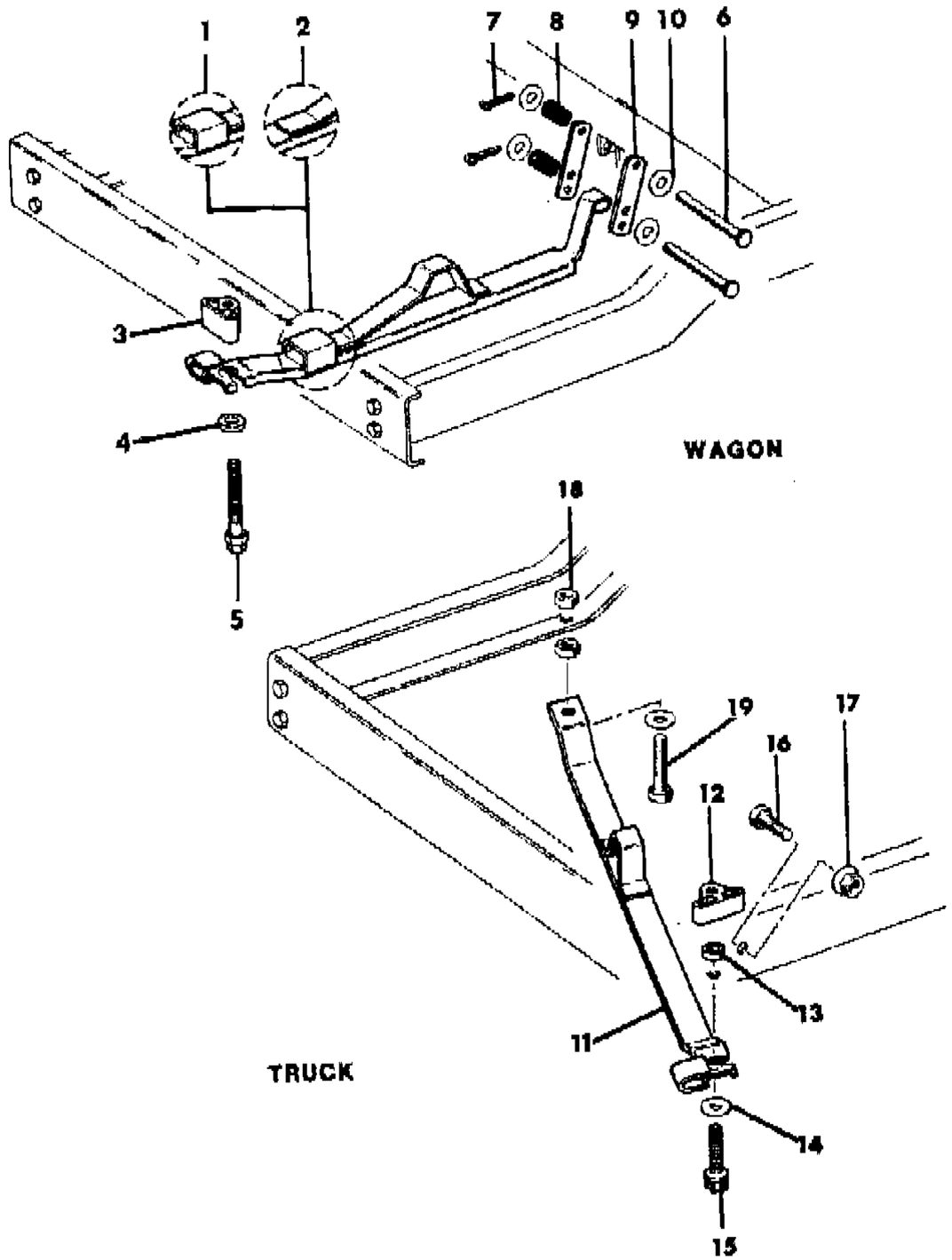

ITEM	PART NUMBER	QTY	BODY	MODEL	DESCRIPTION
1	J536 2549	1			BAR, MOUNTING, With class 1 trailer towing pkg., 1981-1986
	J536 4910	1			With class 3 trailer towing pkg., 1984-1986
2	J535 4018	1			BAR, Mounting, Less trailer towing pkg.
3	J099 4719	1			NUT
4	J012 1458	1			WASHER, .09" thick
	J099 8036	1			SPACER, .38" thick
5					BOLT
	J400 4984	1			5.0" long
	J400 4982	1			5.5" long
	J400 4983	1			7.0" long
6	J091 2217	2			PIN, Clevis
7	J012 1222	2			PIN, Cotter
8	J080 3356	2			SPRING
9	J535 5352	2			PLATE, 5 Hole
	J535 7938	2			3 Hole
10	J012 0394	4			WASHER
11	J535 3485	1			BAR, Mounting
12	J099 4719	1			NUT
13	J099 8036	1			SPACER
14	J012 1458	2			WASHER
15					BOLT
	J400 4984	1		15,16,1	1981-86: 5.0" long
	J400 4982	1			1981-86: 5.5" long
	J400 4983	1			1981-86: 7" long
16	J018 0145	1			BOLT
17	J400 3956	1			NUT
18	J012 4843	2			NUT
19					BOLT
	J400 4983	1			2.0" long
	J012 2630	1			3.0" long
	J043 3022	1			4.7" long
	J099 9306	1			6.0" long

MODEL CODES

16=Cherokee 2 Dr.(1981-83)
17=Cherokee 2 Dr.(1981-83)
73=Cherokee 2WD-2 Dr.(1984-86)
74=Cherokee 2WD-4 Dr.(1984-86)
18=Cherokee 4 Dr.(1981-83)
77=Cherokee 4WD-2 Dr.(1984-86)
78=Cherokee 4WD-4 Dr.(1984-86)
85=CJ-5 (1981-83)
86=CJ-6(1981)
87=CJ-7(1981-86)
88=CJ-8, Scrambler(1981-86)
64=Comanche 2WD-6 Ft. Box(1986)
66=Comanche 2WD-7 Ft. Box(1986)
63=Comanche 4WD-6 Ft. Box(1986)
65=Comanche 4WD-7 Ft. Box(1986)
15=Grand Wagoneer 4 Dr.(1984-86)
25=J-10 Truck 7 Ft. Box(1981-84)
26=J10 Truck 8 Ft. Box(1981-86)
27=J-20 Truck 8 Ft. Box(1981-86)
15=Wagoneer 4 Dr.(1981-83)
75=Wagoneer 4WD-4 Dr.(1984-86)

BODY
CJ=CJ-5, CJ-6, CJ-7, CJ-8, Scrambler(1981-86)
MJ=Comanche Pickup(1986)

STYLES
SJ=Wagoneer(1981-83), Grand Wagoneer(1984-86), Cherokee(1981-83), J-10, J-20(1981-86)
XJ=Wagoneer(1984-86), Cherokee(1984-86)

AR = Use as Required - = Non Illustrated Part P.A.R. = Paint as Required

« RETURN TO GROUP INDEX

JACK AND STORAGE BAG SJ CHEROKEE, SJ WAGONEER, J10, J20
Figure 22-1600

81J22 1600

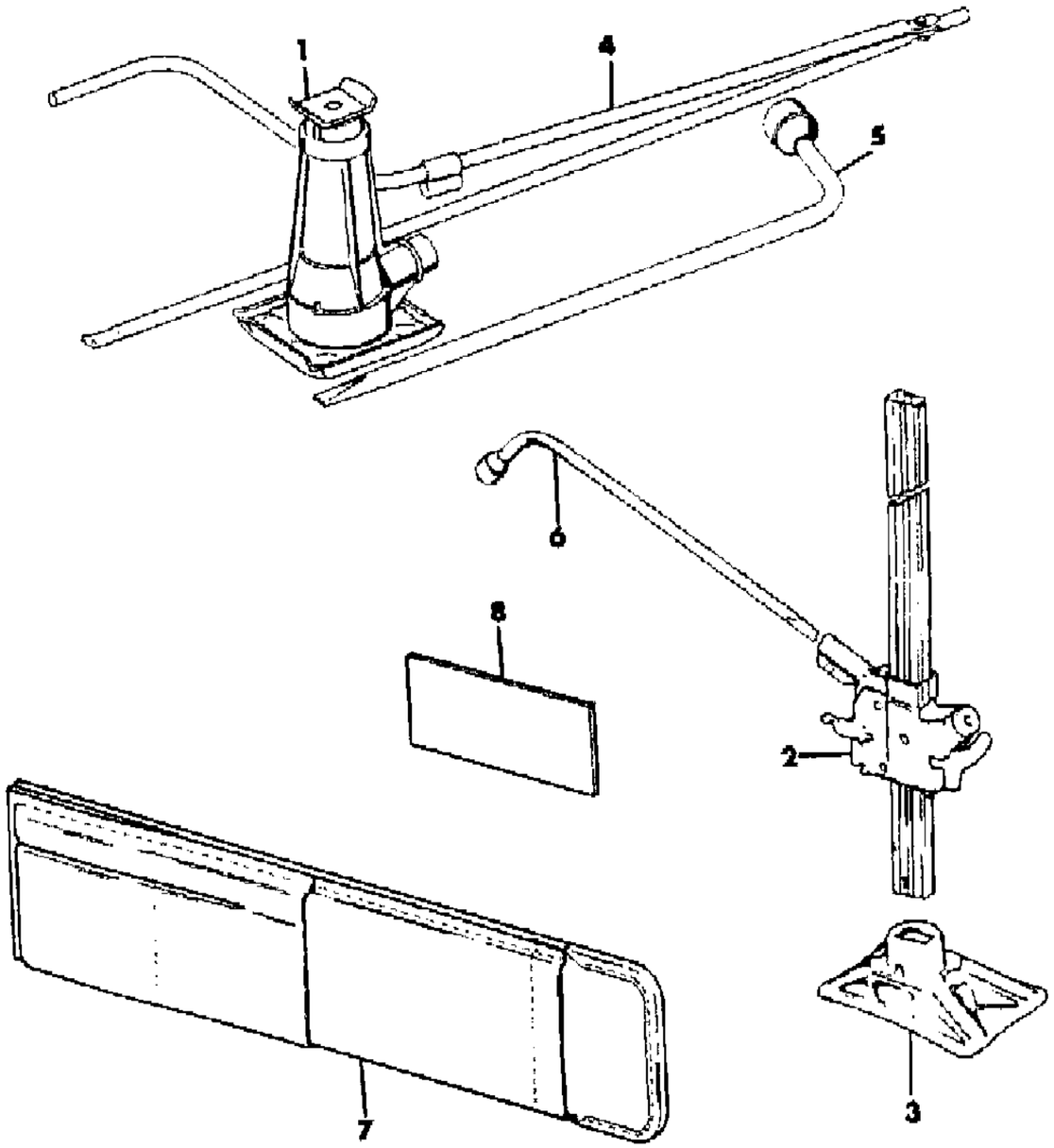

ITEM	PART NUMBER	QTY	BODY	MODEL	DESCRIPTION
1					JACK
	J535 4439	1		15,16,1	Screw, Used with brush guard
	J535 4439	1		26	Screw
	J535 4439			27	Screw, GVW-6800
	J535 4012	1		27	Screw, GVW-7200, GVW-8000
	J590 0775	1			Hydraulic, Models 15,16,17,18,25,26,27
	J805 1798	1			Hydraulic, EXPORT, Models 15,16,17,18,25,26,27
2	J535 8904	1		15,16,1	JACK, Bumper
3	J535 5009	1		15,16,1	BASE, Jack
4	J535 4665	1			HANDLE, Jack
5	J535 2730	1		27	WRENCH, Lug
6	J535 4991	1			WRENCH, Lug, Models 15,16,17,18,25,26
7	J545 0463	1			BAG, Jack
8	J576 6468	1			INSULATOR ***

MODEL CODES

16=Cherokee 2 Dr.(1981-83)
17=Cherokee 2 Dr.(1981-83)
73=Cherokee 2WD-2 Dr.(1984-86)
74=Cherokee 2WD-4 Dr.(1984-86)
18=Cherokee 4 Dr.(1981-83)
77=Cherokee 4WD-2 Dr.(1984-86)
78=Cherokee 4WD-4 Dr.(1984-86)
85=CJ-5 (1981-83)
86=CJ-6(1981)
87=CJ-7(1981-86)
88=CJ-8, Scrambler(1981-86)
64=Comanche 2WD-6 Ft. Box(1986)
66=Comanche 2WD-7 Ft. Box(1986)
63=Comanche 4WD-6 Ft. Box(1986)
65=Comanche 4WD-7 Ft. Box(1986)
15=Grand Wagoneer 4 Dr.(1984-86)
25=J-10 Truck 7 Ft. Box(1981-84)
26=J10 Truck 8 Ft. Box(1981-86)
27=J-20 Truck 8 Ft. Box(1981-86)
15=Wagoneer 4 Dr.(1981-83)
75=Wagoneer 4WD-4 Dr.(1984-86)

BODY
CJ=CJ-5, CJ-6, CJ-7, CJ-8, Scrambler(1981-86)
MJ=Comanche Pickup(1986)

STYLES
SJ=Wagoneer(1981-83), Grand Wagoneer(1984-86), Cherokee(1981-83), J-10, J-20(1981-86)
XJ=Wagoneer(1984-86), Cherokee(1984-86)

AR = Use as Required - = Non Illustrated Part P.A.R. = Paint as Required

« RETURN TO GROUP INDEX

ILLUSTRATION NOT AVAILABLE AT TIME OF PUBLICATION

GROUP 23 - BODY - EXTERIOR ORNAMENTATION

ILLUSTRATION TITLE	GROUP-FIG. NO.
CJ	
NAMEPLATES CJ	Fig. 23-100
MOULDINGS, EXTERIOR, LOWER CJ	Fig. 23-200
EXTENSIONS FENDER AND REAR QUARTER CJ	Fig. 23-300
DECALS, EXTERIOR FRENCH COMMERCIAL PKG., EXPORT, WITHOUT WORLD CAB CJ	Fig. 23-400
DECALS, EXTERIOR RENEGADE, 1981-82 CJ-5,7	Fig. 23-500
DECALS, EXTERIOR RENEGADE, 1983-84 CJ-5,7	Fig. 23-600
DECALS, EXTERIOR RENEGADE, 1985-86 CJ-7	Fig. 23-700
DECALS, EXTERIOR RENEGADE, EXPORT WITH WORLD CAB CJ-7	Fig. 23-800
DECALS, EXTERIOR LLANERO, VENEZUELA WITH WORLD CAB CJ-7	Fig. 23-900
DECALS, EXTERIOR LAREDO, 1981-84 CJ-5,7	Fig. 23-1000
DECALS, EXTERIOR LAREDO, 1985-86 CJ-7	Fig. 23-1100
DECALS, EXTERIOR LAREDO, EXPORT WITH WORLD CAB CJ-7	Fig. 23-1200
DECALS, EXTERIOR LIMITED, 1982-83 CJ-7	Fig. 23-1300
DECALS, EXTERIOR 1981 SUPERSTAR, 1982 SUNBURST CJ-7	Fig. 23-1400
DECALS, EXTERIOR JAMBOREE, 1982 CJ-7	Fig. 23-1500
DECALS, EXTERIOR SPRING PROMOTION, 1985 CJ-7	Fig. 23-1600
DECALS, EXTERIOR BASE SCRAMBLER	Fig. 23-1700
DECALS, EXTERIOR SR SPORT, 1981-82 SCRAMBLER	Fig. 23-1800
DECALS, EXTERIOR SR SPORT, 1983-84 SCRAMBLER	Fig. 23-1900
DECALS, EXTERIOR RENEGADE, 1985-86 SCRAMBLER	Fig. 23-2000
DECALS, EXTERIOR RENEGADE, EXPORT, WITHOUT WORLD CAB, 1981-82 CJ-8	Fig. 23-2100
DECALS, EXTERIOR RENEGADE, EXPORT, WITHOUT WORLD CAB, 1983-84 CJ-8	Fig. 23-2200
DECALS, EXTERIOR RENEGADE, EXPORT WITH WORLD CAB CJ-8	Fig. 23-2300
DECALS, EXTERIOR LLANERO, VENEZUELA WITH WORLD CAB CJ-8	Fig. 23-2400
DECALS, EXTERIOR SL SPORT, 1981-84 SCRAMBLER	Fig. 23-2500
DECALS, EXTERIOR LAREDO, 1985-86 SCRAMBLER	Fig. 23-2600
DECALS, EXTERIOR LAREDO, EXPORT, WITHOUT WORLD CAB CJ-8	Fig. 23-2700
DECALS, EXTERIOR LAREDO, EXPORT WITH WORLD CAB CJ-8	Fig. 23-2800
DECALS, EXTERIOR LIMITED, VENEZUELA WITH WORLD CAB CJ-8	Fig. 23-2900
XJ CHEROKEE, XJ WAGONEER, COMMANCHE	
NAMEPLATES XJ CHEROKEE 4 DOOR	Fig. 23-3000
MOULDINGS, EXTERIOR, UPPER XJ CHEROKEE 4 DOOR	Fig. 23-3100
MOULDINGS, EXTERIOR , LOWER XJ CHEROKEE 4 DOOR	Fig. 23-3200
DECALS, EXTERIOR PIONEER, 1984-85 XJ CHEROKEE 4 DOOR	Fig. 23-3300
DECALS, EXTERIOR PIONEER, 1986 XJ CHEROKEE 4 DOOR	Fig. 23-3400
DECALS, EXTERIOR 2 TONE, 1986 XJ CHEROKEE 4 DOOR	Fig. 23-3500

ILLUSTRATION TITLE	GROUP-FIG. NO.
XJ CHEROKEE, XJ WAGONEER, COMMANCHE (Continued)	
DECALS, EXTERIOR 2 TONE, 1986 XJ CHEROKEE 4 DOOR	Fig. 23-3500
DECALS, EXTERIOR CHIEF TYPE 1 1984 XJ CHEROKEE 4 DOOR	Fig. 23-3600
DECALS, EXTERIOR CHIEF, TYPE 2 1984, 1985-86 XJ CHEROKEE 4 DOOR	Fig. 23-3700
DECALS, EXTERIOR CHIEF, E.C.E., 1986 XJ CHEROKEE 4 DOOR	Fig. 23-3800
DECALS, EXTERIOR LAREDO, 1984-86 XJ CHEROKEE LAREDO	Fig. 23-3900
DECALS, EXTERIOR SPRING PROMOTION, 1984 CHEROKEE 4 DOOR	Fig. 23-4000
NAMEPLATES XJ CHEROKEE 2 DOOR	Fig. 23-4100
MOULDINGS, EXTERIOR, UPPER XJ CHEROKEE 2 DOOR	Fig. 23-4200
MOULDINGS, EXTERIOR, LOWER XJ, CHEROKEE 2 DOOR	Fig. 23-4300
DECALS, EXTERIOR PIONEER, 1984-85 XJ CHEROKEE 2 DOOR	Fig. 23-4400
DECALS, EXTERIOR PIONEER, 1986 XJ CHEROKEE 2 DOOR	Fig. 23-4500
DECALS, EXTERIOR 2 TONE, 1985 XJ CHEROKEE 2 DOOR	Fig. 23-4600
DECALS, EXTERIOR 2 TONE, 1986 XJ CHEROKEE 2 DOOR	Fig. 23-4700
DECALS, EXTERIOR CHIEF, TYPE 1, 1984 XJ CHEROKEE 2 DOOR	Fig. 23-4800
DECALS, EXTERIOR CHIEF, TYPE 2 1984, 1985-86 XJ CHEROKEE 2 DOOR	Fig. 23-4900
DECALS, EXTERIOR CHIEF, E.C.E., 1986 XJ CHEROKEE 2 DOOR	Fig. 23-5000
DECALS, EXTERIOR LAREDO, 1984-86 XJ CHEROKEE 2 DOOR	Fig. 23-5100
DECALS, EXTERIOR SPRING PROMOTION, 1984 XJ CHEROKEE 2 DOOR	Fig. 23-5200
DECALS, EXTERIOR SPRING PROMOTION, 1985 XJ CHEROKEE 2 DOOR	Fig. 23-5300
NAMEPLATES XJ WAGONEER	Fig. 23-5400
MOULDINGS, EXTERIOR, UPPER XJ WAGONEER	Fig. 23-5500
MOULDINGS, EXTERIOR, LOWER XJ WAGONEER LIMITED	Fig. 23-5600
DECALS, EXTERIOR WOODGRAIN XJ WAGONEER LIMITED	Fig. 23-5700
DECALS, EXTERIOR PINSTRIPE XJ WAGONEER	Fig. 23-5800
DECALS, EXTERIOR 2 TONE, 1986 XJ WAGONEER	Fig. 23-5900
NAMEPLATES, COMANCHE	Fig. 23-6000
MOULDINGS, EXTERIOR, UPPER COMANCHE	Fig. 23-6100
MOULDINGS, EXTERIOR, LOWER COMANCHE	Fig. 23-6200
DECALS, EXTERIOR BASE, COMANCHE	Fig. 23-6300
DECALS, EXTERIOR 2 TONE CUSTOM COMANCHE	Fig. 23-6400
DECALS, EXTERIOR 2 TONE SPORT TRUCK COMANCHE	Fig. 23-6500
DECALS, EXTERIOR 2 TONE, PREMIUM COMANCHE	Fig. 23-6600
DECALS, EXTERIOR 2 TONE COMMEMORATIVE COMANCHE	Fig. 23-6700
DECALS, EXTERIOR X COMANCHE	Fig. 23-6800
DECALS, EXTERIOR XLS COMANCHE	Fig. 23-6900
DECALS, EXTERIOR SPORT COMANCHE	Fig. 23-7000
DECALS, EXTERIOR PARTS AND SERVICE COMANCHE	Fig. 23-7100

GROUP 23 - BODY - EXTERIOR ORNAMENTATION

ILLUSTRATION TITLE	GROUP-FIG. NO.
XJ CHEROKEE, XJ WAGONEER, COMMANCHE (Continued)	
DECALS, EXTERIOR PARTS AND SERVICE COMANCHE	Fig. 23-7100
SJ CHEROKEE, SJ WAGONEER, J10, J20	
NAMEPLATES SJ CHEROKEE 4 DOOR	Fig. 23-7200
MOULDINGS, EXTERIOR, UPPER SJ CHEROKEE 4 DOOR	Fig. 23-7300
MOULDINGS, EXTERIOR, LOWER SJ CHEROKEE 4 DOOR, MODEL 18	Fig. 23-7400
DECALS, EXTERIOR PIONEER, 1983 SJ CHEROKEE 4 DOOR, MODEL 18	Fig. 23-7500
DECALS, EXTERIOR CHIEF, 1981-82 SJ CHEROKEE 4 DOOR	Fig. 23-7600
DECALS, EXTERIOR LAREDO, 1981-82, TYPE 1 OR 2 SJ CHEROKEE 4 DOOR, MODEL 18	Fig. 23-7700
DECALS, EXTERIOR LAREDO, 1982 TYPE 3 SJ CHEROKEE 4 DOOR, MODEL 18	Fig. 23-7800
NAMEPLATES SJ CHEROKEE 2 DOOR	Fig. 23-7900
MOULDING, EXTERIOR, UPPER SJ CHEROKEE 2 DOOR	Fig. 23-8000
MOULDINGS, EXTERIOR, LOWER SJ CHEROKEE 2 DOOR, MODEL 16-17	Fig. 23-8100
DECALS, EXTERIOR PIONEER SJ CHEROKEE 2 DOOR, MODEL 16	Fig. 23-8200
DECALS, EXTERIOR CHIEF SJ CHEROKEE 2 DOOR, MODEL 17	Fig. 23-8300
DECALS, EXTERIOR LAREDO, 1982-1982 TYPE 1 OR 2 SJ CHEROKEE 2 DOOR, MODEL 17	Fig. 23-8400
DECALS, EXTERIOR LAREDO, TYPE 3, 1983 SJ CHEROKEE 2 DOOR, MODEL 17	Fig. 23-8500
NAMPLATES SJ WAGONEER	Fig. 23-8600
MOULDINGS, EXTERIOR, UPPER SJ WAGONEER	Fig. 23-8700
MOULDING, EXTERIOR, LOWER W/WOODGRAIN DECALS 1981-82, 1983 TYPE 1, 1983 TYPE 2, 1984-85, 1986 SJ WAGONEER	Fig. 23-8800
MOULDINGS, EXTERIOR, LOWER WITH WOODGRAIN DECALS, 1986 TYPE 2 GRAND WAGONEER	Fig. 23-8900
MOULDINGS, EXTERIOR, LOWER WITH WOODGRAIN DECALS, 1981-82 WITHOUT LIMITED SJ WAGONEER	Fig. 23-9000
MOULDINGS, EXTERIOR, LOWER LESS WOODGRAIN DECALS, LIMITED SJ WAGONEER	Fig. 23-9100
MOULDINGS, EXTERIOR, LOWER WITHOUT WOODGRAIN DECALS, WITHOUT LIMITED SJ WAGONEER	Fig. 23-9200
DECALS, EXTERIOR WOODGRAIN SJ WAGONEER	Fig. 23-9300
DECALS, EXTERIOR WOODGRAIN, 1981-82 WITHOUT LIMITED SJ WAGONEER	Fig. 23-9400
NAMEPLATES TOWNSIDE J10, J20	Fig. 23-9500
MOULDINGS, EXTERIOR, UPPER J10, J20	Fig. 23-9600
MOULDINGS, EXTERIOR, LOWER TOWNSIDE J10, J20	Fig. 23-9700
DECALS, EXTERIOR TOWNSIDE J10, J20	Fig. 23-9800
DECALS, EXTERIOR PIONEER J10, J20	Fig. 23-9900
DECALS, EXTERIOR HONCHO, 1981-82 J10, J20	Fig. 23-10000
DECALS, EXTERIOR LAREDO, 1981-82 J10, J20	Fig. 23-10100
DECALS, EXTERIOR LAREDO, 1983-86 J10, J20	Fig. 23-10200
NAMEPLATES SPORTSIDE J10	Fig. 23-10300

ILLUSTRATION TITLE	GROUP-FIG. NO.
SJ CHEROKEE, SJ WAGONEER, J10, J20 (Continued)	
NAMEPLATES SPORTSIDE J10	Fig. 23-10300
DECALS, EXTERIOR SPORTSIDE, 1981-82 J10	Fig. 23-10400
DECALS, EXTERIOR HONCHO J10	Fig. 23-10500

NAMEPLATES CJ
Figure 23-100

81J68 100

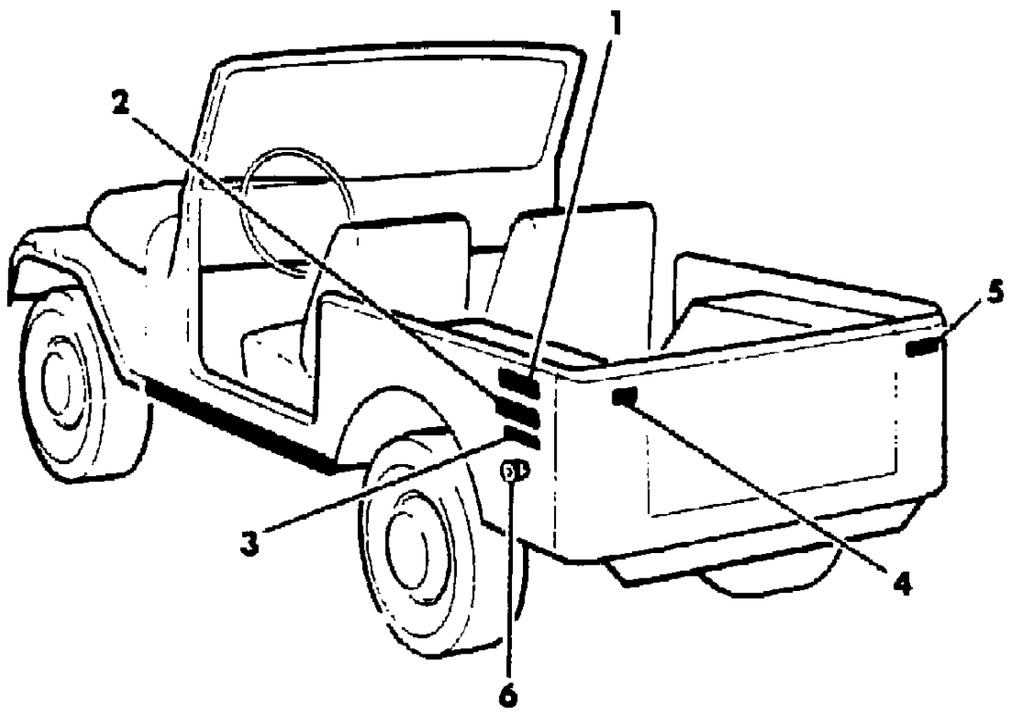

ITEM	PART NUMBER	QTY	BODY	MODEL	DESCRIPTION
1	J576 0708	2			NAMEPLATE, Limited
2					NAMEPLATE
	J576 3509	2			Scrambler
	9500 0047	2			Llanero II, Venezuela
3	J813 2612	2			NAMEPLATE, Llanero II, Venezuela
4					NAMEPLATE
	J545 5179	1		85	CJ-5
	J545 7017	1		87	CJ-7
	J575 8601	1		88	CJ-8
5					NAMEPLATE
	J545 0348	1			AMC
	J545 1627	1			JEEP
6	J400 1335	6			NUT

MODEL CODES
16=Cherokee 2 Dr.(1981-83)
17=Cherokee 2 Dr.(1981-83)
73=Cherokee 2WD-2 Dr.(1984-86)
74=Cherokee 2WD-4 Dr.(1984-86)
18=Cherokee 4 Dr.(1981-83)
77=Cherokee 4WD-2 Dr.(1984-86)
78=Cherokee 4WD-4 Dr.(1984-86)
85=CJ-5 (1981-83)
86=CJ-6(1981)
87=CJ-7(1981-86)
88=CJ-8, Scrambler(1981-86)
64=Comanche 2WD-6 Ft. Box(1986)
66=Comanche 2WD-7 Ft. Box(1986)
63=Comanche 4WD-6 Ft. Box(1986)
65=Comanche 4WD-7 Ft. Box(1986)
15=Grand Wagoneer 4 Dr.(1984-86)
25=J-10 Truck 7 Ft. Box(1981-84)
26=J10 Truck 8 Ft. Box(1981-86)
27=J-20 Truck 8 Ft. Box(1981-86)
15=Wagoneer 4 Dr.(1981-83)
75=Wagoneer 4WD-4 Dr.(1984-86)

BODY
CJ=CJ-5, CJ-6, CJ-7, CJ-8, Scrambler(1981-86)
MJ=Comanche Pickup(1986)

STYLES
SJ=Wagoneer(1981-83), Grand Wagoneer(1984-86), Cherokee(1981-83), J-10, J-20(1981-86)
XJ=Wagoneer(1984-86), Cherokee(1984-86)

AR = Use as Required - = Non Illustrated Part P.A.R. = Paint as Required

« RETURN TO GROUP INDEX

MOULDINGS, EXTERIOR, LOWER CJ
Figure 23-200

81J68 20D

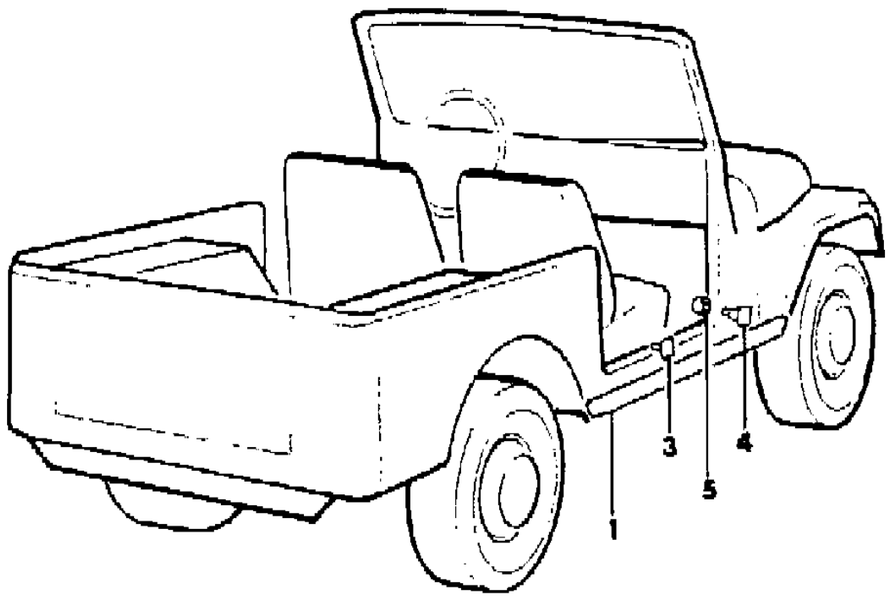

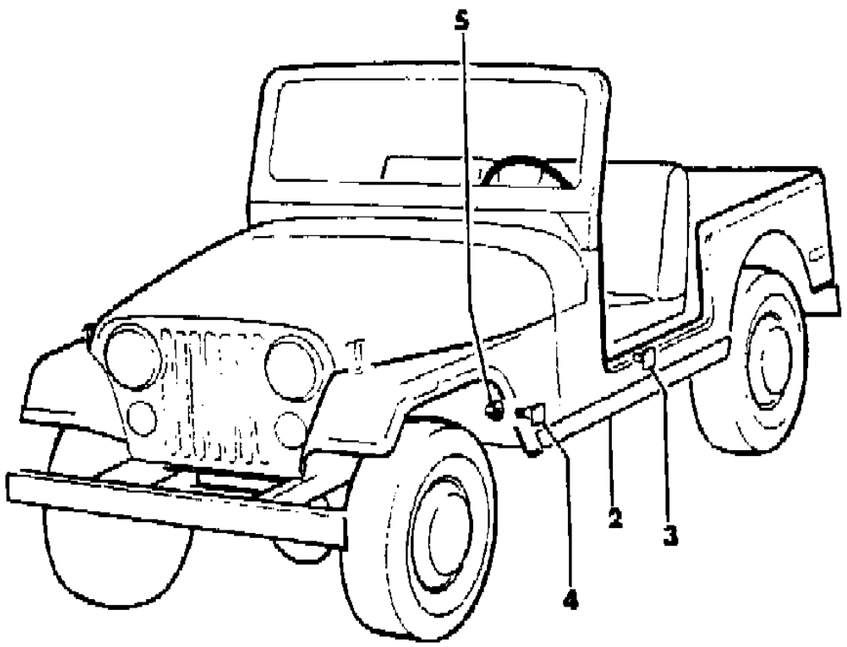

ITEM	PART NUMBER	QTY	BODY	MODEL	DESCRIPTION
1					MOULDING, Body Side Right
					Chrome
	J545 7080	1		85	CJ-5
	J545 7082	1		87	CJ-7
	J813 3656	1		88	Scrambler
					Black
	J546 3020	1		85	CJ-5
	J546 3022	1		87	CJ-7
	J813 3654	1		88	Scrambler
2					MOULDING, Body Side Left
					Chrome
	J545 7079	1		85	CJ-5
	J545 7081	1		87	CJ-7
	J813 3657	1		88	Scrambler
					Black
	J546 3019	1		85	CJ-5
	J546 3021	1		87	CJ-7
	J813 3655	1		88	Scrambler
3	J400 5681	2			SCREW, T-Head, 1.16"
4	J400 5648	AR			SCREW, T-Head, 1.0"
5	S027 3801	AR			NUT

MODEL CODES

16=Cherokee 2 Dr.(1981-83)
17=Cherokee 2 Dr.(1981-83)
73=Cherokee 2WD-2 Dr.(1984-86)
74=Cherokee 2WD-4 Dr.(1984-86)
18=Cherokee 4 Dr.(1981-83)
77=Cherokee 4WD-2 Dr.(1984-86)
78=Cherokee 4WD-4 Dr.(1984-86)
85=CJ-5 (1981-83)
86=CJ-6(1981)
87=CJ-7(1981-86)
88=CJ-8, Scrambler(1981-86)
64=Comanche 2WD-6 Ft. Box(1986)
66=Comanche 2WD-7 Ft. Box(1986)
63=Comanche 4WD-6 Ft. Box(1986)
65=Comanche 4WD-7 Ft. Box(1986)
15=Grand Wagoneer 4 Dr.(1984-86)
25=J-10 Truck 7 Ft. Box(1981-84)
26=J10 Truck 8 Ft. Box(1981-86)
27=J-20 Truck 8 Ft. Box(1981-86)
15=Wagoneer 4 Dr.(1981-83)
75=Wagoneer 4WD-4 Dr.(1984-86)

BODY

CJ=CJ-5, CJ-6, CJ-7, CJ-8, Scrambler(1981-86)
MJ=Comanche Pickup(1986)

STYLES

SJ=Wagoneer(1981-83), Grand Wagoneer(1984-86), Cherokee(1981-83), J-10, J-20(1981-86)
XJ=Wagoneer(1984-86), Cherokee(1984-86)

AR = Use as Required - = Non Illustrated Part P.A.R. = Paint as Required

« RETURN TO GROUP INDEX

EXTENSIONS FENDER AND REAR QUARTER CJ
Figure 23-300

81J68 300

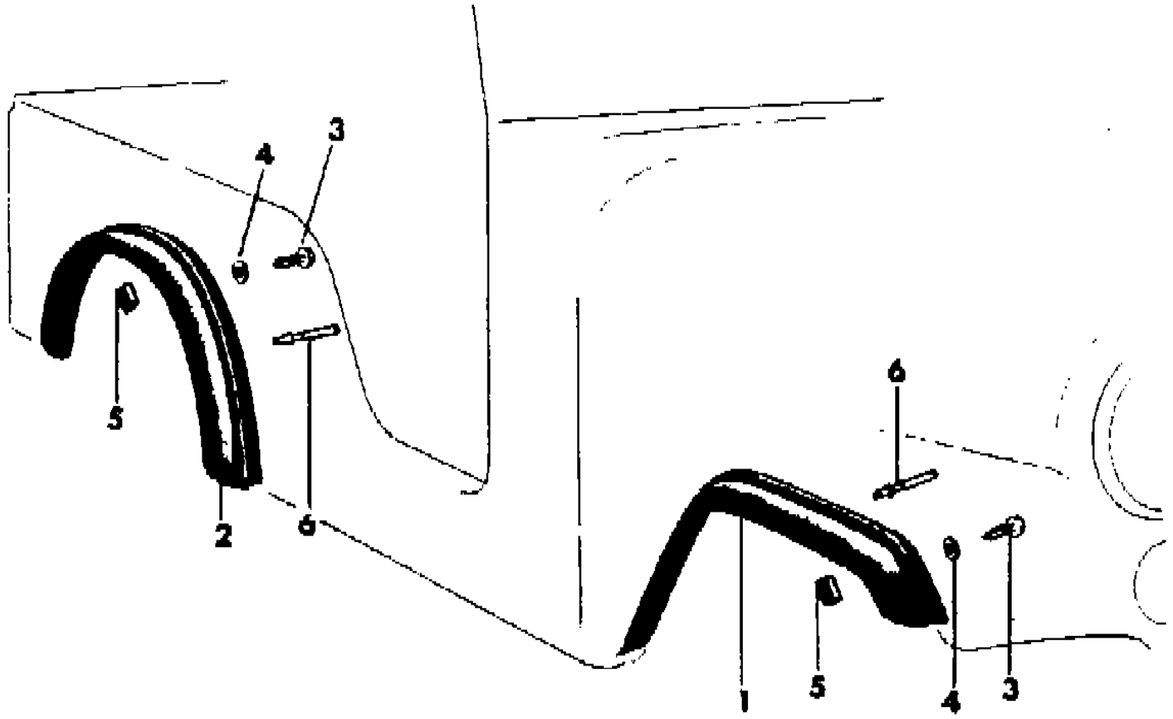

ITEM	PART NUMBER	QTY	BODY	MODEL	DESCRIPTION
1					EXTENSION, Fender
					Right
	J545 5072	1			3" Width, P.A.R.
	J576 2592	1			5" Width P.A.R.
	J576 2592	1		87	Japan
					Left
	J545 5071	1			3" Width P.A.R.
	J576 2593	1			5" Width P.A.R.
	J576 2593	1		87	Japan
2					EXTENSION, Rear Quarter
					Right
	J545 5074	1		85,87	3" Width P.A.R.
	J576 4772	1		85,87	5" Width P.A.R.
	J575 7020	1		88	
	J576 4772	1		87	Japan
					Left
	J545 5073	1		85,87	3" Width P.A.R.
	J576 4771	1		85,87	5" Width P.A.R.
	J575 7021	1		88	
	J576 4771	1		87	Japan
	J576 2594	2		87	Japan: 1982-83
3	J400 2337	AR			SCREW
4	J044 6152	AR		87	WASHER, Japan
5	J400 4868	AR			NUT
6	J400 7081	AR		87	RIVET

MODEL CODES
16=Cherokee 2 Dr.(1981-83)
17=Cherokee 2 Dr.(1981-83)
73=Cherokee 2WD-2 Dr.(1984-86)
74=Cherokee 2WD-4 Dr.(1984-86)
18=Cherokee 4 Dr.(1981-83)
77=Cherokee 4WD-2 Dr.(1984-86)
78=Cherokee 4WD-4 Dr.(1984-86)
85=CJ-5 (1981-83)
86=CJ-6(1981)
87=CJ-7(1981-86)
88=CJ-8, Scrambler(1981-86)
64=Comanche 2WD-6 Ft. Box(1986)
66=Comanche 2WD-7 Ft. Box(1986)
63=Comanche 4WD-6 Ft. Box(1986)
65=Comanche 4WD-7 Ft. Box(1986)
15=Grand Wagoneer 4 Dr.(1984-86)
25=J-10 Truck 7 Ft. Box(1981-84)
26=J10 Truck 8 Ft. Box(1981-86)
27=J-20 Truck 8 Ft. Box(1981-86)
15=Wagoneer 4 Dr.(1981-83)
75=Wagoneer 4WD-4 Dr.(1984-86)

BODY
CJ=CJ-5, CJ-6, CJ-7, CJ-8, Scrambler(1981-86)
MJ=Comanche Pickup(1986)

STYLES
SJ=Wagoneer(1981-83), Grand Wagoneer(1984-86), Cherokee(1981-83), J-10, J-20(1981-86)
XJ=Wagoneer(1984-86), Cherokee(1984-86)

AR = Use as Required - = Non Illustrated Part P.A.R. = Paint as Required

« RETURN TO GROUP INDEX

DECALS, EXTERIOR FRENCH COMMERCIAL PKG., EXPORT, WITHOUT WORLD CAB CJ
Figure 23-400

81J68 400

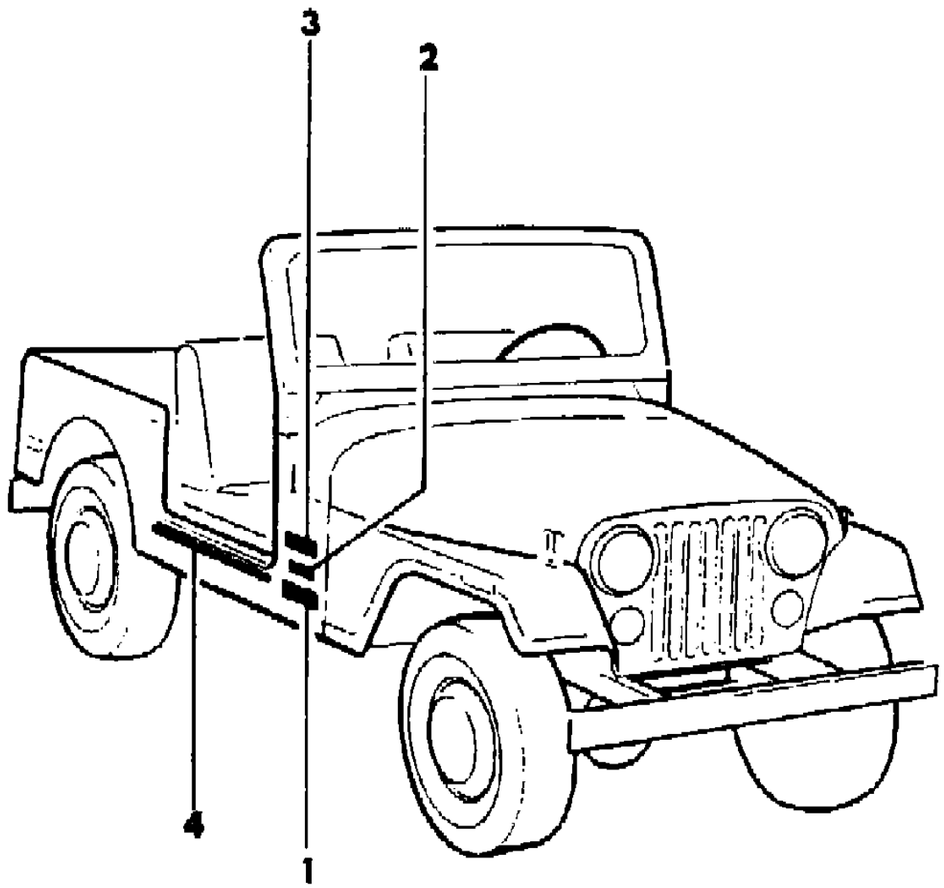

ITEM	PART NUMBER	QTY	BODY	MODEL	DESCRIPTION
1					DECAL, Jeep
	J546 1682	2			Black
	J546 1681	2			White: 1982-84
	J576 6787	2			White: 1985
2					DECAL, Cowl, Diesel
	J575 0284	2			Black
	J575 7491	2			Silver
3	J576 3527	1			DECAL, Cowl, GVW-4150, PTC1,88t
4	J576 5270	2			PROTECTOR, Scuff, Clear

MODEL CODES

16=Cherokee 2 Dr.(1981-83)
17=Cherokee 2 Dr.(1981-83)
73=Cherokee 2WD-2 Dr.(1984-86)
74=Cherokee 2WD-4 Dr.(1984-86)
18=Cherokee 4 Dr.(1981-83)
77=Cherokee 4WD-2 Dr.(1984-86)
78=Cherokee 4WD-4 Dr.(1984-86)
85=CJ-5 (1981-83)
86=CJ-6(1981)
87=CJ-7(1981-86)
88=CJ-8, Scrambler(1981-86)
64=Comanche 2WD-6 Ft. Box(1986)
66=Comanche 2WD-7 Ft. Box(1986)
63=Comanche 4WD-6 Ft. Box(1986)
65=Comanche 4WD-7 Ft. Box(1986)
15=Grand Wagoneer 4 Dr.(1984-86)
25=J-10 Truck 7 Ft. Box(1981-84)
26=J10 Truck 8 Ft. Box(1981-86)
27=J-20 Truck 8 Ft. Box(1981-86)
15=Wagoneer 4 Dr.(1981-83)
75=Wagoneer 4WD-4 Dr.(1984-86)

BODY
CJ=CJ-5, CJ-6, CJ-7, CJ-8, Scrambler(1981-86)
MJ=Comanche Pickup(1986)

STYLES
SJ=Wagoneer(1981-83), Grand Wagoneer(1984-86), Cherokee(1981-83), J-10, J-20(1981-86)
XJ=Wagoneer(1984-86), Cherokee(1984-86)

AR = Use as Required - = Non Illustrated Part P.A.R. = Paint as Required

« RETURN TO GROUP INDEX

DECALS, EXTERIOR RENEGADE, 1981-82 CJ-5,7
Figure 23-500

81J68 500

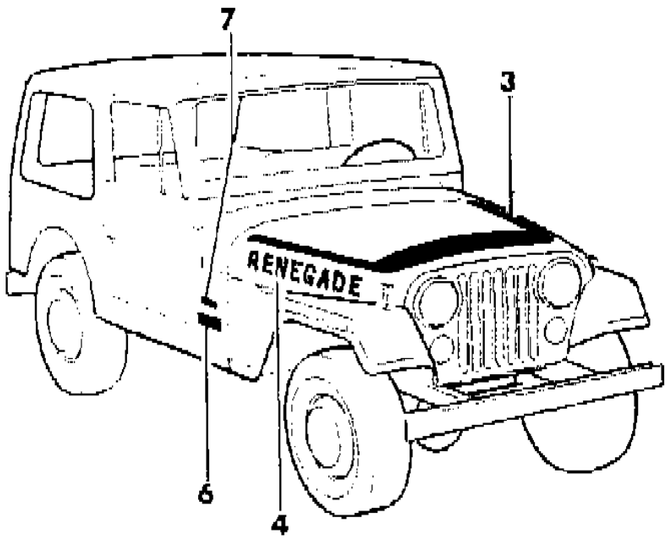

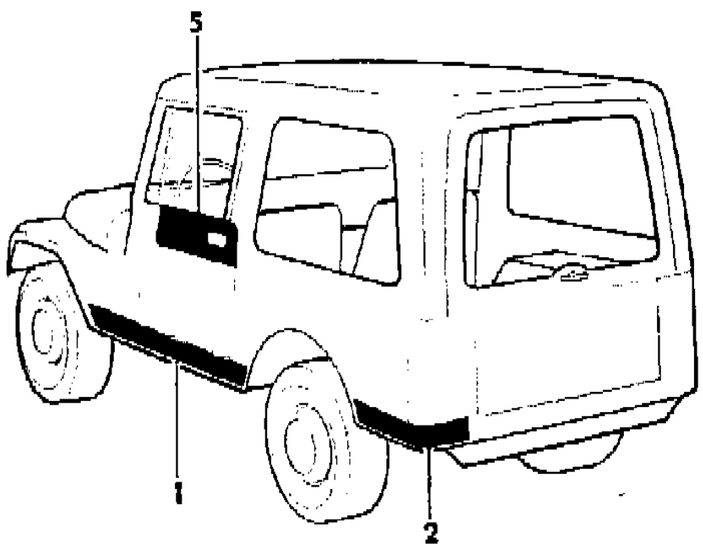

ITEM	PART NUMBER	QTY	BODY	MODEL	DESCRIPTION
1					DECAL, Body Side
	J575 5330-1	1		85	Blues
	J575 2714-5	1		85	Coppers
	J575 5328-9	1		85	Reds
	J575 5334-5	1		87	Blues
	J575 2716-7	1		87	Coppers
	J575 5332-3	1		87	Reds
2					DECAL, Rear Quarter
	J575 5338-9	1			Blues
	J575 2718-9	1			Coppers
	J575 5336-7	1			Reds
3					DECAL, Hood
	J575 5324	1			Blues
	J575 2712	1			Coppers
	J575 5323	1			Reds
4					DECAL, Hood, Renegade
	J575 5326	1			Blues
	J575 2713	1			Coppers
	J575 5325	1			Reds
5					APPLIQUE, Door
	J575 7648-9	1		87	Black
	J576 0250-1	1		87	Nutmeg
	J576 0756-7	1		87	White
6					DECAL, Jeep
	J546 1682	2			Black
	J546 1681	2			White
7					DECAL, Cowl
	J575 0284	1			Black, Diesel, EXPORT
	J575 7491	1			Silver, Diesel, EXPORT

MODEL CODES

16=Cherokee 2 Dr.(1981-83)	78=Cherokee 4WD-4 Dr.(1984-86)	64=Comanche 2WD-6 Ft. Box(1986)	25=J-10 Truck 7 Ft. Box(1981-84)
17=Cherokee 2 Dr.(1981-83)	85=CJ-5 (1981-83)	66=Comanche 2WD-7 Ft. Box(1986)	26=J10 Truck 8 Ft. Box(1981-86)
73=Cherokee 2WD-2 Dr.(1984-86)	86=CJ-6(1981)	63=Comanche 4WD-6 Ft. Box(1986)	27=J-20 Truck 8 Ft. Box(1981-86)
74=Cherokee 2WD-4 Dr.(1984-86)	87=CJ-7(1981-86)	65=Comanche 4WD-7 Ft. Box(1986)	15=Wagoneer 4 Dr.(1981-83)
18=Cherokee 4 Dr.(1981-83)	88=CJ-8, Scrambler(1981-86)	15=Grand Wagoneer 4 Dr.(1984-86)	75=Wagoneer 4WD-4 Dr.(1984-86)
77=Cherokee 4WD-2 Dr.(1984-86)			

BODY
CJ=CJ-5, CJ-6, CJ-7, CJ-8, Scrambler(1981-86)
MJ=Comanche Pickup(1986)

STYLES
SJ=Wagoneer(1981-83), Grand Wagoneer(1984-86), Cherokee(1981-83), J-10, J-20(1981-86)
XJ=Wagoneer(1984-86), Cherokee(1984-86)

AR = Use as Required - = Non Illustrated Part P.A.R. = Paint as Required

« RETURN TO GROUP INDEX

DECALS, EXTERIOR RENEGADE, 1983-84 CJ-5,7
Figure 23-600

81J68 600

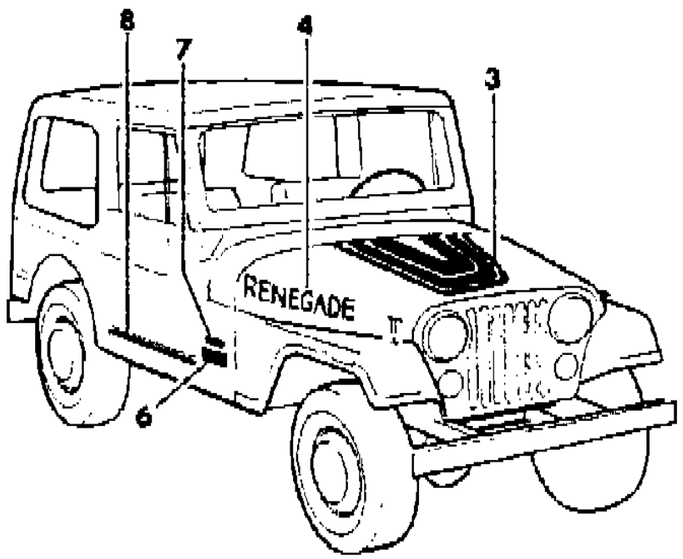

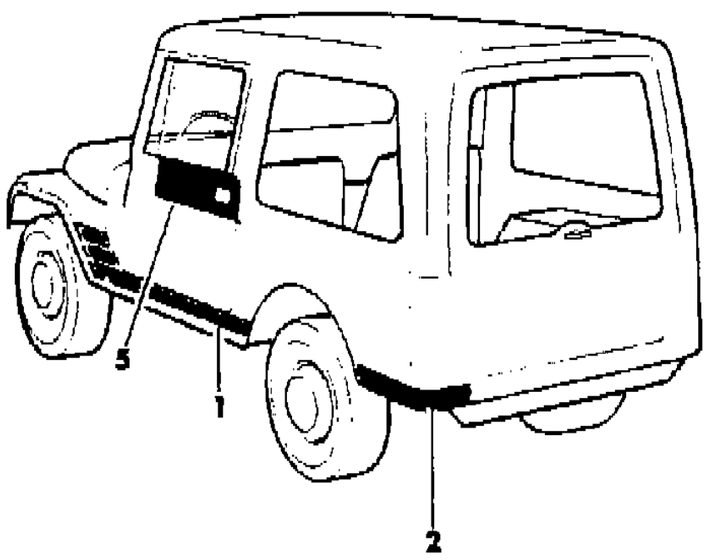

ITEM	PART NUMBER	QTY	BODY	MODEL	DESCRIPTION
1					DECAL, Body Side
	J576 3022-3	1		85	Yellows
	J576 3030-1	1		87	Yellows
					Up to 5-1-83
	J576 3018-9	1		85	Blues
	J576 3014-5	1		85	Reds
	J576 3028-9	1		87	Blues
	J576 3026-7	1		87	Reds
					After 5-1-83
	J576 4352-3	1		85	Blues
	J576 4348-9	1		85	Oranges
	J576 4358-9	1		87	Blues
	J576 4356-7	1		87	Oranges
2					DECAL, Rear Quarter
	J576 3024-5	1			Yellows
					Up to 5-1-83
	J576 3020-1	1			Blues
	J576 3016-7	1			Reds
					After 5-1-83
	J576 4350-1	1			Oranges
	J576 4354-5	1			Blues
3					DECAL, Hood
	J576 3007	1			Yellows
					Up to 5-1-83
	J576 3006	1			Blues
	J576 3005	1			Reds
					After 5-1-83
	J576 4339	1			Blues
	J576 4338	1			Oranges
4					DECAL, Hood, Renegade
	J576 3012-3	1			Yellows
					Up to 5-1-83
	J576 3010-1	1			Blues
	J576 3008-9	1			Reds
					After 5-1-83
	J576 4342-3	1			Blues
	J576 4340-1	1			Oranges
5					APPLIQUE, Door
					1983

MODEL CODES

16=Cherokee 2 Dr.(1981-83)
17=Cherokee 2 Dr.(1981-83)
73=Cherokee 2WD-2 Dr.(1984-86)
74=Cherokee 2WD-4 Dr.(1984-86)
18=Cherokee 4 Dr.(1981-83)
77=Cherokee 4WD-2 Dr.(1984-86)
78=Cherokee 4WD-4 Dr.(1984-86)
85=CJ-5 (1981-83)
86=CJ-6(1981)
87=CJ-7(1981-86)
88=CJ-8, Scrambler(1981-86)
64=Comanche 2WD-6 Ft. Box(1986)
66=Comanche 2WD-7 Ft. Box(1986)
63=Comanche 4WD-6 Ft. Box(1986)
65=Comanche 4WD-7 Ft. Box(1986)
15=Grand Wagoneer 4 Dr.(1984-86)
25=J-10 Truck 7 Ft. Box(1981-84)
26=J10 Truck 8 Ft. Box(1981-86)
27=J-20 Truck 8 Ft. Box(1981-86)
15=Wagoneer 4 Dr.(1981-83)
75=Wagoneer 4WD-4 Dr.(1984-86)

BODY

CJ=CJ-5, CJ-6, CJ-7, CJ-8, Scrambler(1981-86)
MJ=Comanche Pickup(1986)

STYLES

SJ=Wagoneer(1981-83), Grand Wagoneer(1984-86), Cherokee(1981-83), J-10, J-20(1981-86)
XJ=Wagoneer(1984-86), Cherokee(1984-86)

AR = Use as Required - = Non Illustrated Part P.A.R. = Paint as Required

DECALS, EXTERIOR RENEGADE, 1983-84 CJ-5,7
Figure 23-600

81J68 600

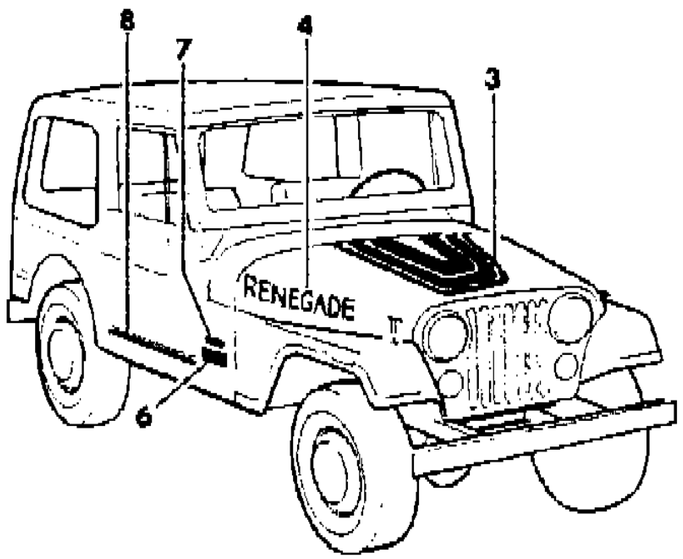

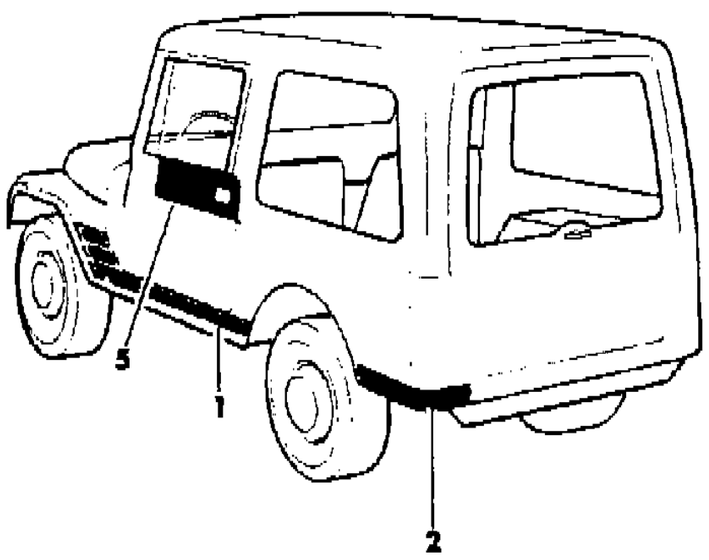

ITEM	PART NUMBER	QTY	BODY	MODEL	DESCRIPTION
	J576 0250-1	1		87	Nutmeg
	J576 0756-7	1		87	White
					1983-84
	J575 7648-9	1		87	Black
					1984
	J576 4570-1	1		87	Black
	J576 4572-3	1		87	Nutmeg
	J576 4568-9	1		87	White
6					DECAL, Jeep
	J546 1682	2			Black
	J546 1681	2			White
7					DECAL, Cowl, Diesel
					EXPORT
	J575 0284	1			Black
	J575 7491	1			Silver
8	J576 5270	2			PROTECTOR, Scuff, Clear

MODEL CODES

16=Cherokee 2 Dr.(1981-83)
17=Cherokee 2 Dr.(1981-83)
73=Cherokee 2WD-2 Dr.(1984-86)
74=Cherokee 2WD-4 Dr.(1984-86)
18=Cherokee 4 Dr.(1981-83)
77=Cherokee 4WD-2 Dr.(1984-86)
78=Cherokee 4WD-4 Dr.(1984-86)
85=CJ-5 (1981-83)
86=CJ-6(1981)
87=CJ-7(1981-86)
88=CJ-8, Scrambler(1981-86)
64=Comanche 2WD-6 Ft. Box(1986)
66=Comanche 2WD-7 Ft. Box(1986)
63=Comanche 4WD-6 Ft. Box(1986)
65=Comanche 4WD-7 Ft. Box(1986)
15=Grand Wagoneer 4 Dr.(1984-86)
25=J-10 Truck 7 Ft. Box(1981-84)
26=J10 Truck 8 Ft. Box(1981-86)
27=J-20 Truck 8 Ft. Box(1981-86)
15=Wagoneer 4 Dr.(1981-83)
75=Wagoneer 4WD-4 Dr.(1984-86)

BODY

CJ=CJ-5, CJ-6, CJ-7, CJ-8, Scrambler(1981-86)
MJ=Comanche Pickup(1986)

STYLES

SJ=Wagoneer(1981-83), Grand Wagoneer(1984-86), Cherokee(1981-83), J-10, J-20(1981-86)
XJ=Wagoneer(1984-86), Cherokee(1984-86)

AR = Use as Required - = Non Illustrated Part P.A.R. = Paint as Required

DECALS, EXTERIOR RENEGADE, 1985-86 CJ-7
Figure 23-700

81J68 700

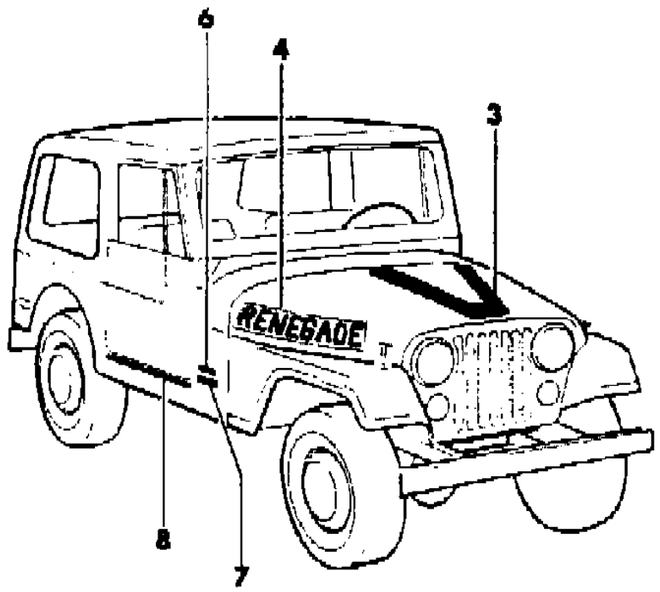

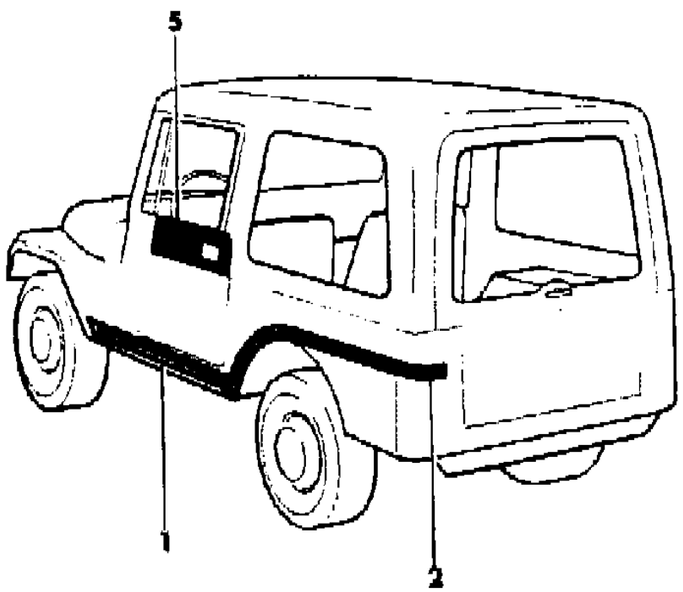

ITEM	PART NUMBER	QTY	BODY	MODEL	DESCRIPTION
1					DECAL, Body Side
	J576 5424-5	1			Blues
	J576 5422-3	1			Oranges
	J576 5420-1	1			Yellows
2					DECAL, Rear Quarter
	J576 5436-7	1			Blues
	J576 5434-5	1			Oranges
	J576 5432-3	1			Yellows
3					DECAL, Hood
	J576 5407	1			Blues
	J576 5406	1			Oranges
	J576 5405	1			Yellows
4					DECAL, Hood, Renegade
	J576 5412-3	1			Blues
	J576 5410-1	1			Oranges
	J576 5408-9	1			Yellows
5					APPLIQUE, Door
	J576 4570-1	1			Black
	J576 5504-5	1			Honey
	J576 4568-9	1			White
6					DECAL, Diesel, EXPORT
	J575 0284	2			Black
	J575 7491	2			Silver
7					DECAL, Jeep
	J546 1682	2			Black
	J576 6777	2			Copper
	J576 6779	2			Dark Blue
	J576 6778	2			Dark Orange
	J576 6780	2			White
8	J576 5270	2			PROTECTOR, Scuff, Clear

MODEL CODES

16=Cherokee 2 Dr.(1981-83)
17=Cherokee 2 Dr.(1981-83)
73=Cherokee 2WD-2 Dr.(1984-86)
74=Cherokee 2WD-4 Dr.(1984-86)
18=Cherokee 4 Dr.(1981-83)
77=Cherokee 4WD-2 Dr.(1984-86)
78=Cherokee 4WD-4 Dr.(1984-86)
85=CJ-5 (1981-83)
86=CJ-6(1981)
87=CJ-7(1981-86)
88=CJ-8, Scrambler(1981-86)
64=Comanche 2WD-6 Ft. Box(1986)
66=Comanche 2WD-7 Ft. Box(1986)
63=Comanche 4WD-6 Ft. Box(1986)
65=Comanche 4WD-7 Ft. Box(1986)
15=Grand Wagoneer 4 Dr.(1984-86)
25=J-10 Truck 7 Ft. Box(1981-84)
26=J10 Truck 8 Ft. Box(1981-86)
27=J-20 Truck 8 Ft. Box(1981-86)
15=Wagoneer 4 Dr.(1981-83)
75=Wagoneer 4WD-4 Dr.(1984-86)

BODY
CJ=CJ-5, CJ-6, CJ-7, CJ-8, Scrambler(1981-86)
MJ=Comanche Pickup(1986)

STYLES
SJ=Wagoneer(1981-83), Grand Wagoneer(1984-86), Cherokee(1981-83), J-10, J-20(1981-86)
XJ=Wagoneer(1984-86), Cherokee(1984-86)

AR = Use as Required - = Non Illustrated Part P.A.R. = Paint as Required

« RETURN TO GROUP INDEX

DECALS, EXTERIOR RENEGADE, EXPORT WITH WORLD CAB CJ-7
Figure 23-800

81J68 800

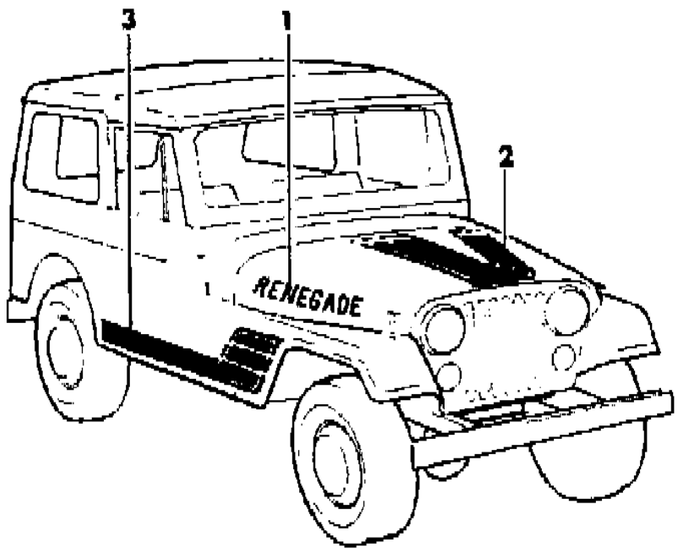

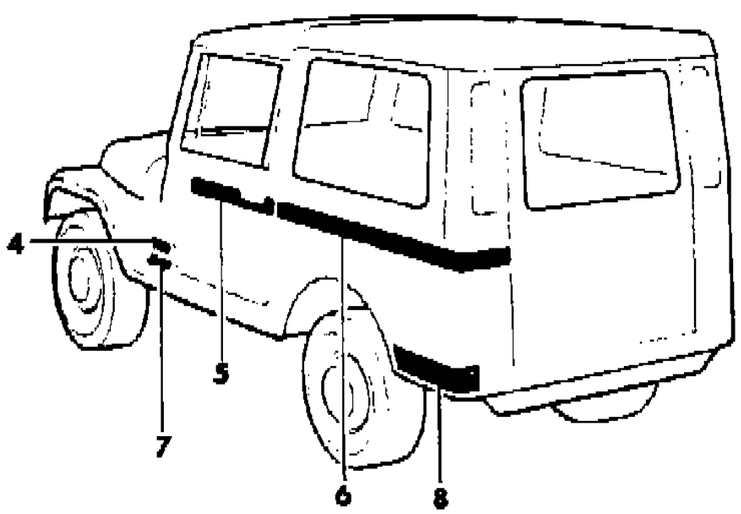

ITEM	PART NUMBER	QTY	BODY	MODEL	DESCRIPTION
1					DECAL, Hood, Renegade
	J576 3012-3	1			Yellows
					Up to 5-1-83
	J576 3008-9	1			Reds
	J576 3010-1	1			Blues
					After 5-1-83
	J576 4342-3	1			Blues
	J576 4340-1	1			Oranges
2					DECAL, Hood
	J576 3007	1			Yellows
					Up to 5-1-83
	J576 3006	1			Blues
	J576 3005	1			Reds
					After 5-1-83
	J576 4339	1			Blues
	J576 4338	1			Oranges
3					DECAL, Body Side
	J576 3030-1	1			Yellows
					Up to 5-1-83
	J576 3028-9	1			Blues
	J576 3026-7	1			Reds
					After 5-1-83
	J576 4358-9	1			Blues
	J576 4356-7	1			Oranges
4					DECAL, Diesel
	J575 0284	1			Black
	J575 7491	1			Silver
5					DECAL, Door
					Right
	J805 3102	1			Copper
	J805 3104	1			Dark Blue
	J805 3106	1			Dark Red
	J805 3278	1			Dark Blue (a)
	J805 3280	1			Dark Orange (a)
					Left
	J805 3101	1			Copper
	J805 3103	1			Dark Blue
	J805 3105	1			Dark Red
	J805 3277	1			Dark Blue (a)

MODEL CODES

16=Cherokee 2 Dr.(1981-83)
17=Cherokee 2 Dr.(1981-83)
73=Cherokee 2WD-2 Dr.(1984-86)
74=Cherokee 2WD-4 Dr.(1984-86)
18=Cherokee 4 Dr.(1981-83)
77=Cherokee 4WD-2 Dr.(1984-86)
78=Cherokee 4WD-4 Dr.(1984-86)
85=CJ-5 (1981-83)
86=CJ-6(1981)
87=CJ-7(1981-86)
88=CJ-8, Scrambler(1981-86)
64=Comanche 2WD-6 Ft. Box(1986)
66=Comanche 2WD-7 Ft. Box(1986)
63=Comanche 4WD-6 Ft. Box(1986)
65=Comanche 4WD-7 Ft. Box(1986)
15=Grand Wagoneer 4 Dr.(1984-86)
25=J-10 Truck 7 Ft. Box(1981-84)
26=J10 Truck 8 Ft. Box(1981-86)
27=J-20 Truck 8 Ft. Box(1981-86)
15=Wagoneer 4 Dr.(1981-83)
75=Wagoneer 4WD-4 Dr.(1984-86)

BODY

CJ=CJ-5, CJ-6, CJ-7, CJ-8, Scrambler(1981-86)
MJ=Comanche Pickup(1986)

STYLES

SJ=Wagoneer(1981-83), Grand Wagoneer(1984-86), Cherokee(1981-83), J-10, J-20(1981-86)
XJ=Wagoneer(1984-86), Cherokee(1984-86)

AR = Use as Required - = Non Illustrated Part P.A.R. = Paint as Required

DECALS, EXTERIOR RENEGADE, EXPORT WITH WORLD CAB CJ-7
Figure 23-800

81J68 800

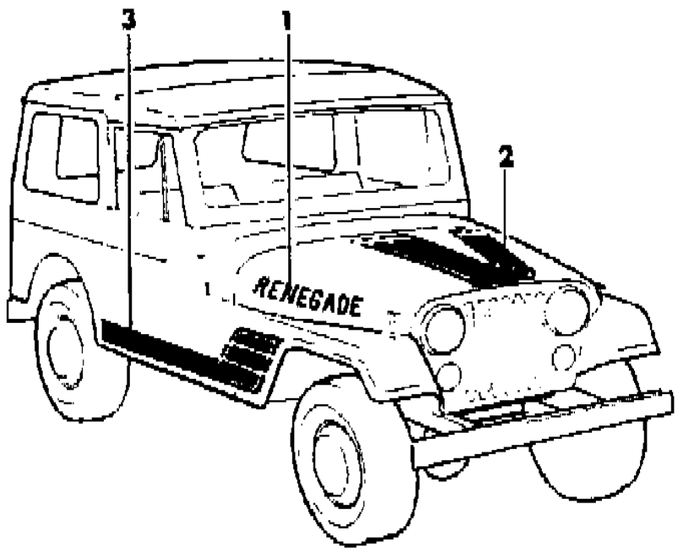

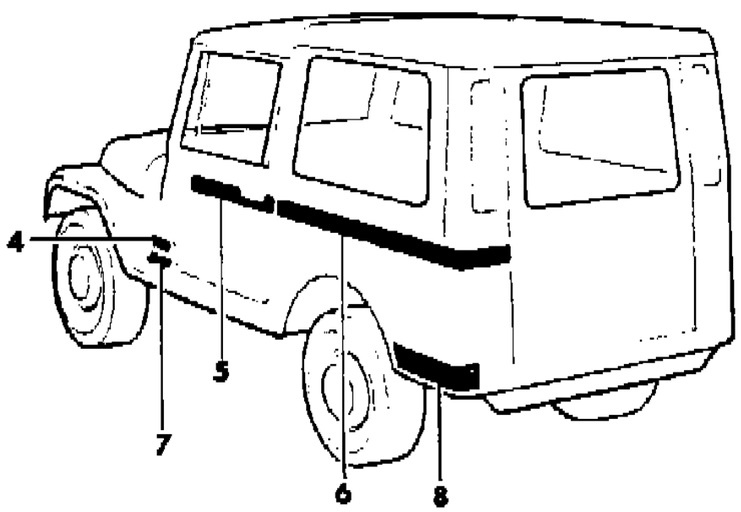

ITEM	PART NUMBER	QTY	BODY	MODEL	DESCRIPTION
	J805 3279	1			Dark Orange (a)
6					DECAL, Rear Quarter
					Right
	J805 3108	1			Copper
	J805 3110	1			Dark Blue
	J805 3112	1			Dark Red
	J805 3282	1			Dark Blue (a)
	J805 3284	1			Dark Orange (a)
					Left
	J805 3107	1			Copper
	J805 3109	1			Dark Blue
	J805 3111	1			Dark Red
	J805 3281	1			Dark Blue (a)
	J805 3283	1			Dark Orange (a)
7					DECAL, Jeep
	J546 1682	2			Black
	J546 1681	2			White
8					DECAL, Rear Quarter Lower
	J576 3024-5	1			Yellows
					Up to 5-1-83
	J576 3020-1	1			Blues
	J576 3016-7	1			Reds
					After 5-1-83
	J576 4354-5	1			Blues
	J576 4350-1	1			Oranges

(a) Color Tones in these Decals match Color Tones of the lower Renegade Body Decals if so equipped. (B) Trans Pt# 8983001671-After #50100909; 8953001670-After #50100901; 8353002265-After #50100423: 8953002264-After #50100934;8953001190-After#

If not equipped with Renegade Decals, Color Tones in Decals were changed approx. near the end of 1983 model which could require a visual match. (B) Trans Pt# 8983001671-After #50100909; 8953001670-After #50100901; 8353002265-After #50100423

MODEL CODES

16=Cherokee 2 Dr.(1981-83)
17=Cherokee 2 Dr.(1981-83)
73=Cherokee 2WD-2 Dr.(1984-86)
74=Cherokee 2WD-4 Dr.(1984-86)
18=Cherokee 4 Dr.(1981-83)
77=Cherokee 4WD-2 Dr.(1984-86)
78=Cherokee 4WD-4 Dr.(1984-86)
85=CJ-5 (1981-83)
86=CJ-6(1981)
87=CJ-7(1981-86)
88=CJ-8, Scrambler(1981-86)
64=Comanche 2WD-6 Ft. Box(1986)
66=Comanche 2WD-7 Ft. Box(1986)
63=Comanche 4WD-6 Ft. Box(1986)
65=Comanche 4WD-7 Ft. Box(1986)
15=Grand Wagoneer 4 Dr.(1984-86)
25=J-10 Truck 7 Ft. Box(1981-84)
26=J10 Truck 8 Ft. Box(1981-86)
27=J-20 Truck 8 Ft. Box(1981-86)
15=Wagoneer 4 Dr.(1981-83)
75=Wagoneer 4WD-4 Dr.(1984-86)

BODY
CJ=CJ-5, CJ-6, CJ-7, CJ-8, Scrambler(1981-86)
MJ=Comanche Pickup(1986)

STYLES
SJ=Wagoneer(1981-83), Grand Wagoneer(1984-86), Cherokee(1981-83), J-10, J-20(1981-86)
XJ=Wagoneer(1984-86), Cherokee(1984-86)

AR = Use as Required - = Non Illustrated Part P.A.R. = Paint as Required

« RETURN TO GROUP INDEX

«

DECALS, EXTERIOR LLANERO, VENEZUELA WITH WORLD CAB CJ-7
Figure 23-900

81J68 900

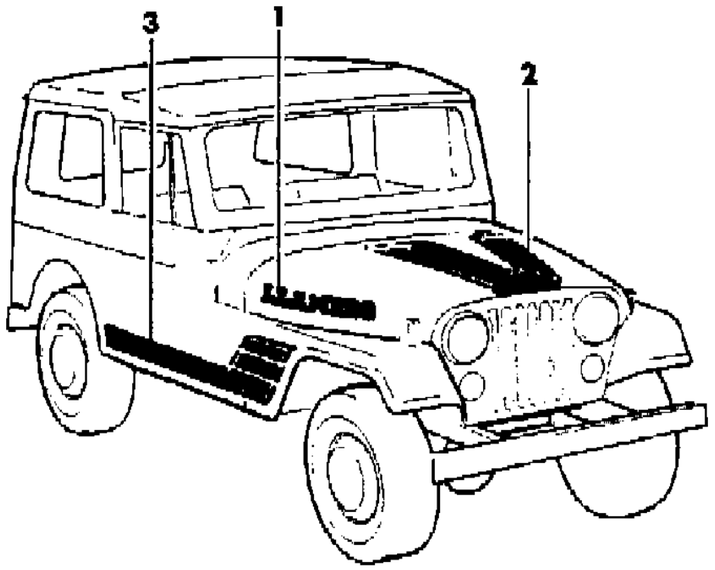

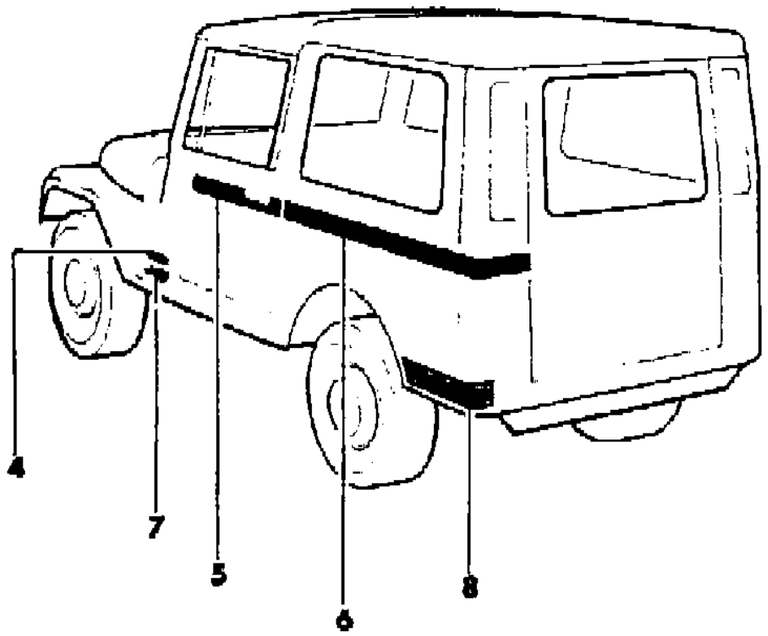

ITEM	PART NUMBER	QTY	BODY	MODEL	DESCRIPTION
1					DECAL, Hood, Llanero
					Right
	J805 3373	1			Blues (a)
	J805 3371	1			Oranges (a)
	J805 3369	1			Yellows (a)
					Left
	J805 3374	1			Blues (a)
	J805 3372	1			Oranges (a)
	J805 3370	1			Yellows (a)
	J805 1325	2			Copper
	J805 1309	2			Dark Blue
	J805 1317	2			Dark Red
2					DECAL, Hood
					Up to 5-1-83
	J576 3006	1			Blues
	J576 3005	1			Reds
					After 5-1-83
	J576 4339	1			Blues
	J576 4338	1			Oranges
3					DECAL, Body Side
	J576 3030-1	1			Yellows
					Up to 5-1-83
	J576 3028-9	1			Blues
	J576 3026-7	1			Reds
					After 5-1-83
	J576 4358-9	1			Blues
	J576 4356-7	1			Oranges
4					DECAL, Diesel
	J575 0284	1			Black
	J575 7491	1			Silver
5					DECAL, Door
					Right
	J805 3102	1			Copper
	J805 3104	1			Dark Blue
	J805 3106	1			Dark Red
	J805 3278	1			Dark Blue (a)
	J805 3280	1			Dark Orange (a)
					Left
	J805 3101	1			Copper

MODEL CODES

16=Cherokee 2 Dr.(1981-83)
17=Cherokee 2 Dr.(1981-83)
73=Cherokee 2WD-2 Dr.(1984-86)
74=Cherokee 2WD-4 Dr.(1984-86)
18=Cherokee 4 Dr.(1981-83)
77=Cherokee 4WD-2 Dr.(1984-86)
78=Cherokee 4WD-4 Dr.(1984-86)
85=CJ-5 (1981-83)
86=CJ-6(1981)
87=CJ-7(1981-86)
88=CJ-8, Scrambler(1981-86)
64=Comanche 2WD-6 Ft. Box(1986)
66=Comanche 2WD-7 Ft. Box(1986)
63=Comanche 4WD-6 Ft. Box(1986)
65=Comanche 4WD-7 Ft. Box(1986)
15=Grand Wagoneer 4 Dr.(1984-86)
25=J-10 Truck 7 Ft. Box(1981-84)
26=J10 Truck 8 Ft. Box(1981-86)
27=J-20 Truck 8 Ft. Box(1981-86)
15=Wagoneer 4 Dr.(1981-83)
75=Wagoneer 4WD-4 Dr.(1984-86)

BODY
CJ=CJ-5, CJ-6, CJ-7, CJ-8, Scrambler(1981-86)
MJ=Comanche Pickup(1986)

STYLES
SJ=Wagoneer(1981-83), Grand Wagoneer(1984-86), Cherokee(1981-83), J-10, J-20(1981-86)
XJ=Wagoneer(1984-86), Cherokee(1984-86)

AR = Use as Required - = Non Illustrated Part P.A.R. = Paint as Required

DECALS, EXTERIOR LLANERO, VENEZUELA WITH WORLD CAB CJ-7
Figure 23-900

81J68 900

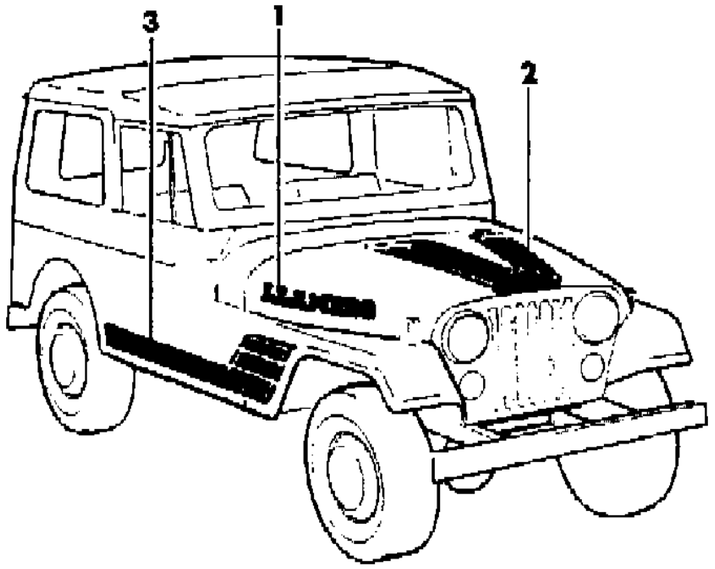

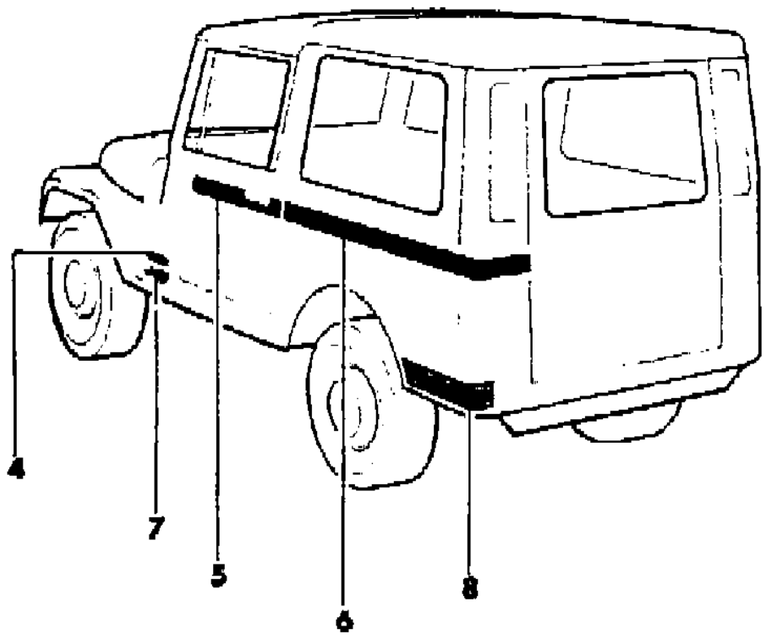

ITEM	PART NUMBER	QTY	BODY	MODEL	DESCRIPTION
	J805 3103	1			Dark Blue
	J805 3105	1			Dark Red
	J805 3277	1			Dark Blue (a)
	J805 3279	1			Dark Orange (a)
6					DECAL, Rear Quarter
					Right
	J805 3108	1			Copper
	J805 3110	1			Dark Blue
	J805 3112	1			Dark Red
	J805 3282	1			Dark Blue (a)
	J805 3284	1			Dark Orange (a)
					Left
	J805 3107	1			Copper
	J805 3109	1			Dark Blue
	J805 3111	1			Dark Red
	J805 3281	1			Dark Blue (a)
	J805 3283	1			Dark Orange (a)
7					DECAL, Jeep
	J546 1682	1			Black
	J546 1681	1			White
8					DECAL, Rear Quarter Lower
	J576 3024-5	1			Yellows
					Up to 5-1-83
	J576 3020-1	1			Blues
	J576 3016-7	1			Reds
					After 5-1-83
	J576 4354-5	1			Blues
	J576 4350-1	1			Oranges

(a) Color Tones in these Decals match the Color Tones of the lower Llanero Body Decals. (B) Trans Pt# 8983001671-After #50100909; 8953001670-After #50100901; 8353002265-After #50100423: 8953002264-After #50100934;8953001190-After#5010

MODEL CODES

16=Cherokee 2 Dr.(1981-83)	78=Cherokee 4WD-4 Dr.(1984-86)	64=Comanche 2WD-6 Ft. Box(1986)	25=J-10 Truck 7 Ft. Box(1981-84)
17=Cherokee 2 Dr.(1981-83)	85=CJ-5 (1981-83)	66=Comanche 2WD-7 Ft. Box(1986)	26=J10 Truck 8 Ft. Box(1981-86)
73=Cherokee 2WD-2 Dr.(1984-86)	86=CJ-6(1981)	63=Comanche 4WD-6 Ft. Box(1986)	27=J-20 Truck 8 Ft. Box(1981-86)
74=Cherokee 2WD-4 Dr.(1984-86)	87=CJ-7(1981-86)	65=Comanche 4WD-7 Ft. Box(1986)	15=Wagoneer 4 Dr.(1981-83)
18=Cherokee 4 Dr.(1981-83)	88=CJ-8, Scrambler(1981-86)	15=Grand Wagoneer 4 Dr.(1984-86)	75=Wagoneer 4WD-4 Dr.(1984-86)
77=Cherokee 4WD-2 Dr.(1984-86)			

BODY
CJ=CJ-5, CJ-6, CJ-7, CJ-8, Scrambler(1981-86)
MJ=Comanche Pickup(1986)

STYLES
SJ=Wagoneer(1981-83), Grand Wagoneer(1984-86), Cherokee(1981-83), J-10, J-20(1981-86)
XJ=Wagoneer(1984-86), Cherokee(1984-86)

AR = Use as Required - = Non Illustrated Part P.A.R. = Paint as Required

DECALS, EXTERIOR LAREDO, 1981-84 CJ-5,7
Figure 23-1000

81J68 1000

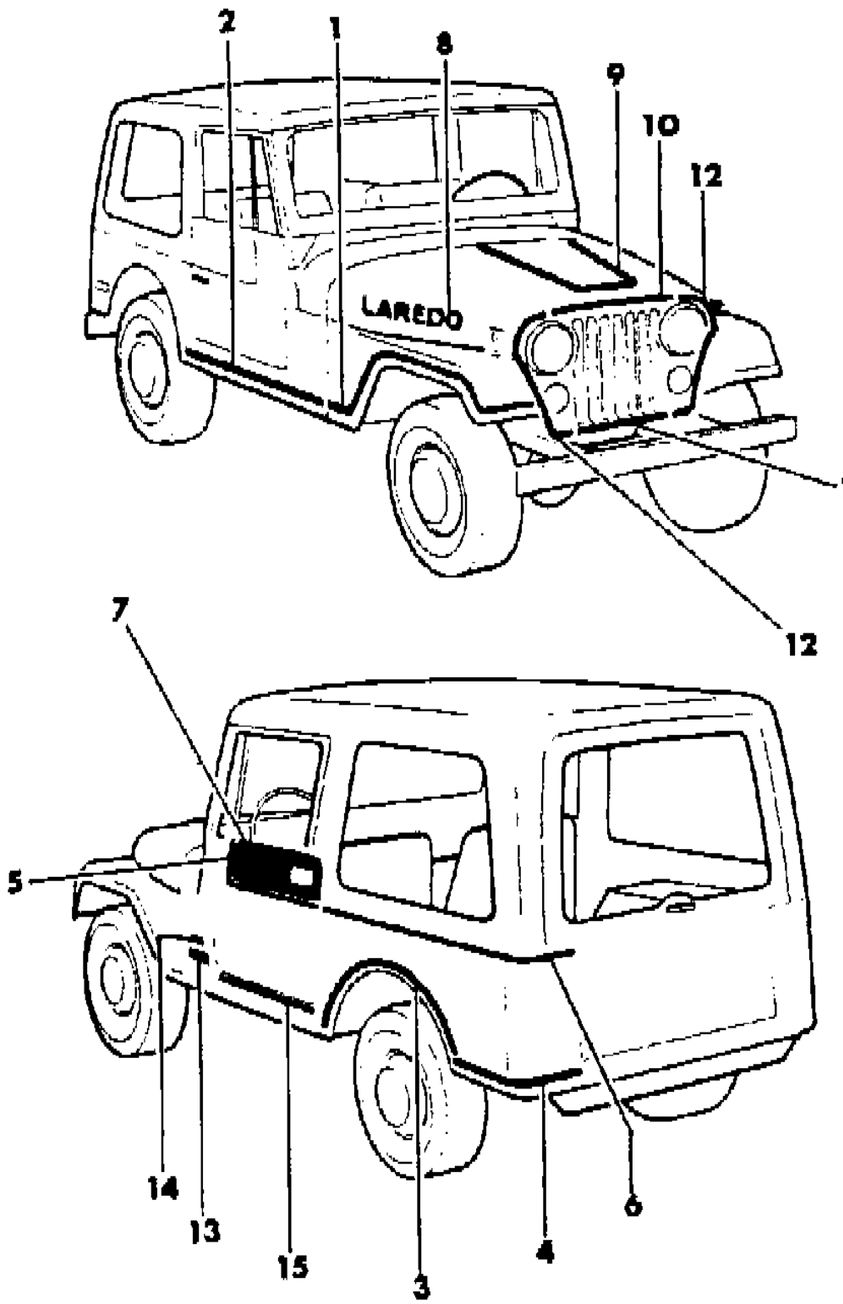

ITEM	PART NUMBER	QTY	BODY	MODEL	DESCRIPTION
1					DECAL, Fender
					Right
	J575 5802	1			Bronze/Dark Nutmeg
	J576 0432	1			Burnt Orange/Nutmeg
	J575 0690	1			Silver
					Left
	J575 5803	1			Bronze/Dark Nutmeg
	J576 0433	1			Burnt Orange/Nutmeg
	J575 0689	1			Silver
2					DECAL, Body Side
					Right
	J575 5812	1		85	Bronze/Dark Nutmeg
	J576 1014	1		85	Burnt Orange/Nutmeg
	J575 0724	1		85	Silver
	J575 5804	1		87	Bronze/Dark Nutmeg
	J576 1004	1		87	Burnt Orange/Nutmeg
	J575 0694	1		87	Silver
					Left
	J575 5813	1		85	Bronze/Dark Nutmeg
	J576 1015	1		85	Burnt Orange/Nutmeg
	J575 0723	1		85	Silver
	J575 5805	1		87	Bronze/Dark Nutmeg
	J576 1005	1		87	Burnt Orange/Nutmeg
	J575 0693	1		87	Silver
3					DECAL, Wheel Opening
					Right
	J575 5808	1			Bronze/Dark Nutmeg
	J576 1008	1			Burnt Orange/Nutmeg
	J575 0702	1			Silver
					Left
	J575 5809	1			Bronze/Dark Nutmeg
	J576 1009	1			Burnt Orange/Nutmeg
	J575 0701	1			Silver
4					DECAL, Rear Quarter Lower
					Right
	J575 5814	1		85	Bronze/Dark Nutmeg
	J576 1016	1		85	Burnt Orange/Nutmeg
	J575 0728	1		85	Silver
	J575 5806	1		87	Bronze/Dark Nutmeg

MODEL CODES

16=Cherokee 2 Dr.(1981-83)
17=Cherokee 2 Dr.(1981-83)
73=Cherokee 2WD-2 Dr.(1984-86)
74=Cherokee 2WD-4 Dr.(1984-86)
18=Cherokee 4 Dr.(1981-83)
77=Cherokee 4WD-2 Dr.(1984-86)
78=Cherokee 4WD-4 Dr.(1984-86)
85=CJ-5 (1981-83)
86=CJ-6(1981)
87=CJ-7(1981-86)
88=CJ-8, Scrambler(1981-86)
64=Comanche 2WD-6 Ft. Box(1986)
66=Comanche 2WD-7 Ft. Box(1986)
63=Comanche 4WD-6 Ft. Box(1986)
65=Comanche 4WD-7 Ft. Box(1986)
15=Grand Wagoneer 4 Dr.(1984-86)
25=J-10 Truck 7 Ft. Box(1981-84)
26=J10 Truck 8 Ft. Box(1981-86)
27=J-20 Truck 8 Ft. Box(1981-86)
15=Wagoneer 4 Dr.(1981-83)
75=Wagoneer 4WD-4 Dr.(1984-86)

BODY
CJ=CJ-5, CJ-6, CJ-7, CJ-8, Scrambler(1981-86)
MJ=Comanche Pickup(1986)

STYLES
SJ=Wagoneer(1981-83), Grand Wagoneer(1984-86), Cherokee(1981-83), J-10, J-20(1981-86)
XJ=Wagoneer(1984-86), Cherokee(1984-86)

AR = Use as Required - = Non Illustrated Part P.A.R. = Paint as Required

DECALS, EXTERIOR LAREDO, 1981-84 CJ-5,7
Figure 23-1000

81J68 1000

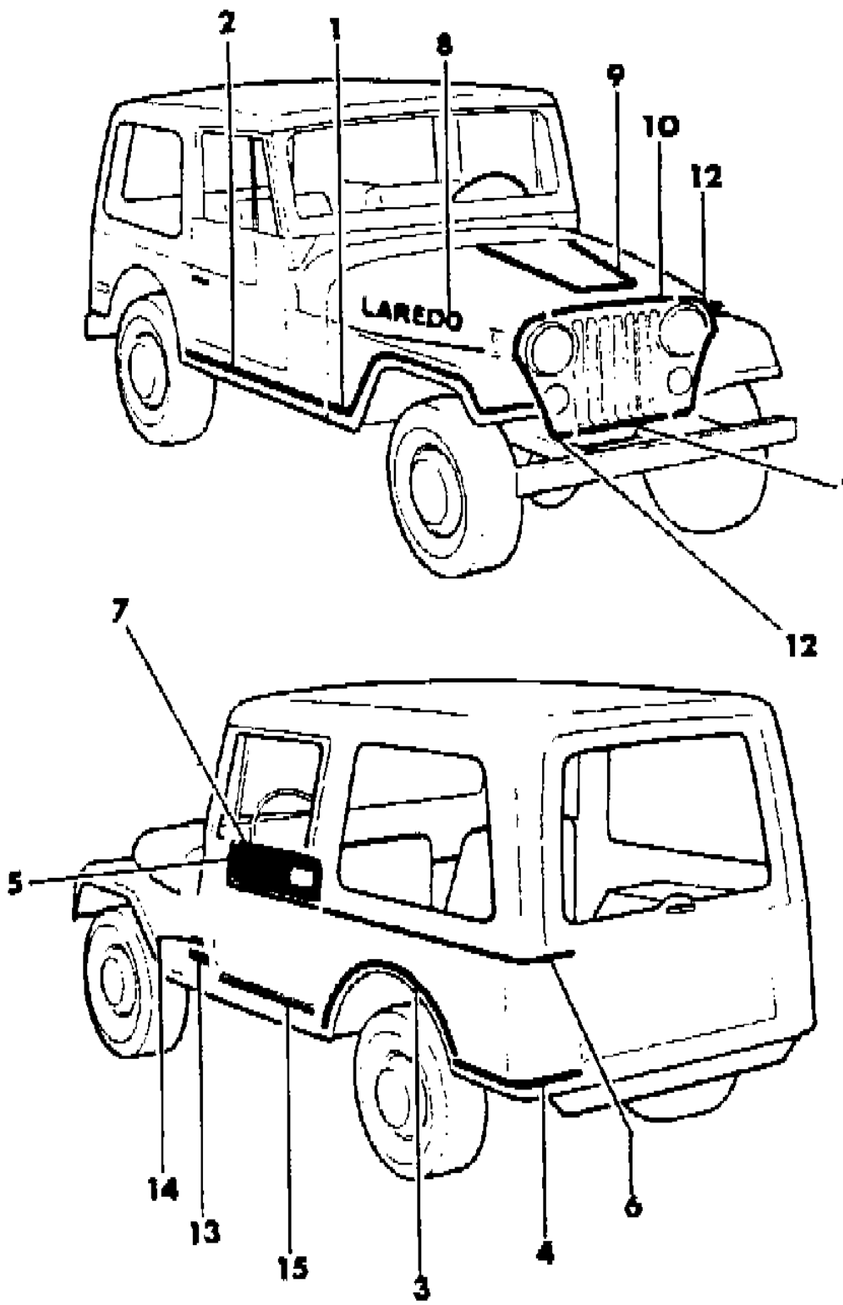

ITEM	PART NUMBER	QTY	BODY	MODEL	DESCRIPTION
	J576 1006	1		87	Burnt Orange/Nutmeg
	J575 0698	1		87	Silver
					Left
	J575 5815	1		85	Bronze/Dark Nutmeg
	J576 1017	1		85	Burnt Orange/Nutmeg
	J575 0727	1		85	Silver
	J575 5807	1		87	Bronze/Dark Nutmeg
	J576 1007	1		87	Burnt Orange/Nutmeg
	J575 0697	1		87	Silver
5					DECAL, Door
					Right
	J575 5816	1			Bronze/Dark Nutmeg
	J576 0448	1			Burnt Orange/Nutmeg
	J575 0708	1			Silver
					Left
	J575 5817	1			Bronze/Dark Nutmeg
	J576 0449	1			Burnt Orange/Nutmeg
	J575 0707	1			Silver
6					DECAL, Rear Quarter
					Right
	J575 5818	1			Bronze/Dark Nutmeg
	J576 1022	1			Burnt Orange/Nutmeg
	J575 1712	1			Silver
					Left
	J575 5819	1			Bronze/Dark Nutmeg
	J576 1023	1			Burnt Orange/Nutmeg
	J575 0711	1			Silver
7					APPLIQUE, Door
					Right
	J575 0716	1			Black, 1981, (a)(c)
	J575 4796	1			Black, 1981, (b)(c)
	J575 5820	1			Nutmeg, 1981, (c)
	J576 0250	1			Nutmeg, 1981-83, (d)
	J575 7648	1			Black, 1981-84, (d)(e)
	J576 4570	1			Black, 1984, (f)
	J576 4572	1			Nutmeg, 1984
					Left
	J575 0715	1			Black, 1981, (a)(c)
	J575 4795	1			Black, 1981, (b)(c)

MODEL CODES

16=Cherokee 2 Dr.(1981-83)
17=Cherokee 2 Dr.(1981-83)
73=Cherokee 2WD-2 Dr.(1984-86)
74=Cherokee 2WD-4 Dr.(1984-86)
18=Cherokee 4 Dr.(1981-83)
77=Cherokee 4WD-2 Dr.(1984-86)
78=Cherokee 4WD-4 Dr.(1984-86)
85=CJ-5 (1981-83)
86=CJ-6(1981)
87=CJ-7(1981-86)
88=CJ-8, Scrambler(1981-86)
64=Comanche 2WD-6 Ft. Box(1986)
66=Comanche 2WD-7 Ft. Box(1986)
63=Comanche 4WD-6 Ft. Box(1986)
65=Comanche 4WD-7 Ft. Box(1986)
15=Grand Wagoneer 4 Dr.(1984-86)
25=J-10 Truck 7 Ft. Box(1981-84)
26=J10 Truck 8 Ft. Box(1981-86)
27=J-20 Truck 8 Ft. Box(1981-86)
15=Wagoneer 4 Dr.(1981-83)
75=Wagoneer 4WD-4 Dr.(1984-86)

BODY
CJ=CJ-5, CJ-6, CJ-7, CJ-8, Scrambler(1981-86)
MJ=Comanche Pickup(1986)

STYLES
SJ=Wagoneer(1981-83), Grand Wagoneer(1984-86), Cherokee(1981-83), J-10, J-20(1981-86)
XJ=Wagoneer(1984-86), Cherokee(1984-86)

AR = Use as Required - = Non Illustrated Part P.A.R. = Paint as Required

DECALS, EXTERIOR LAREDO, 1981-84 CJ-5,7
Figure 23-1000

81J68 1000

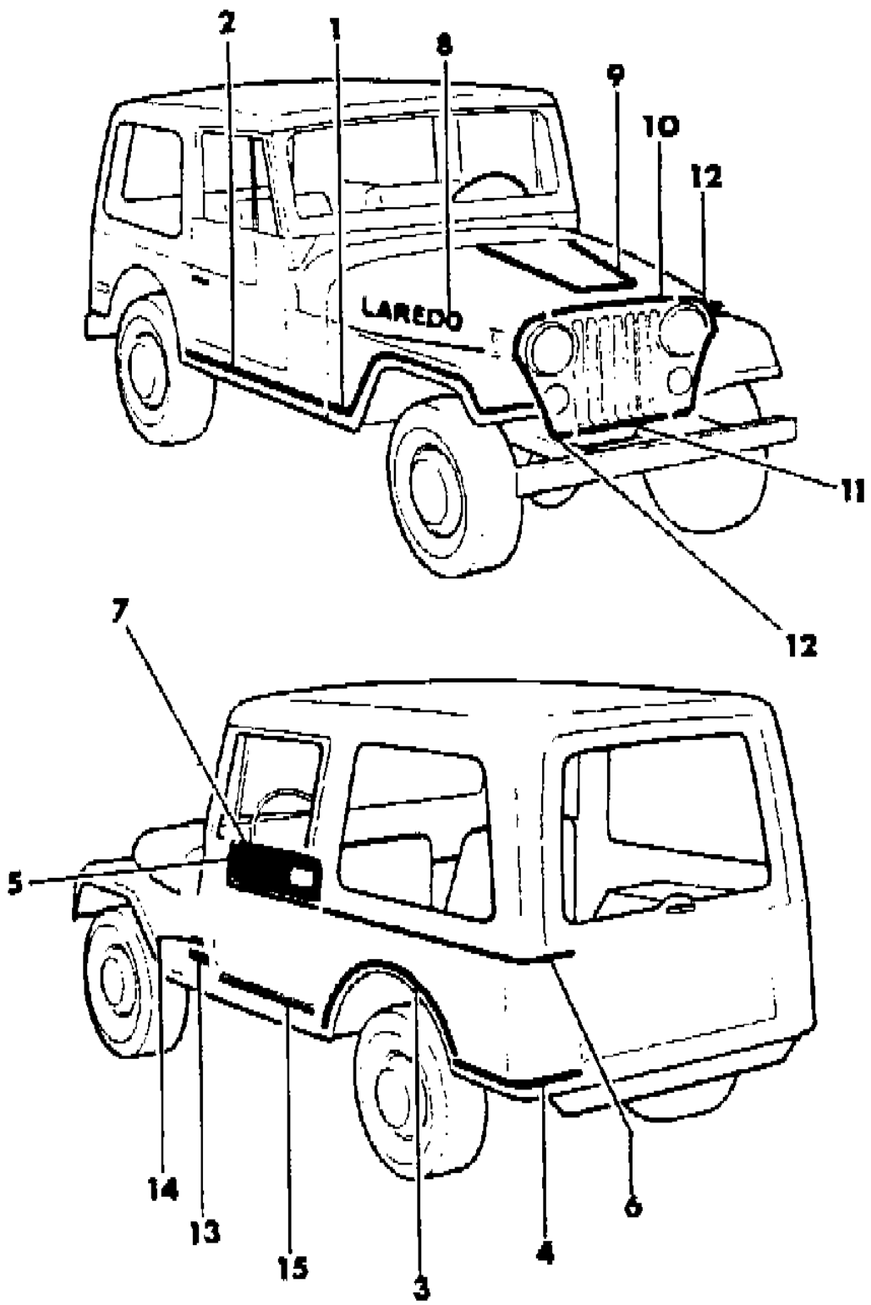

ITEM	PART NUMBER	QTY	BODY	MODEL	DESCRIPTION
	J575 5821	1			Nutmeg, 1981, (c)
	J576 0251	1			Nutmeg, 1981-83, (d)
	J575 7649	1			Black, 1981-84, (d)(e)
	J576 4571	1			Black, 1984, (f)
	J576 4573	1			Nutmeg, 1984
8					DECAL, Hood, Laredo
	J575 5810	2			Bronze/Dark Nutmeg
	J576 1001	2			Burnt Orange/Nutmeg
	J575 4529	2			Silver
9					DECAL, Hood
	J575 5801	1			Bronze/Dark Nutmeg
	J576 0440	1			Burnt Orange/Nutmeg
	J575 0705	1			Silver
10	J575 0719	1			DECAL, Grille, Upper, Black
11	J575 0722	1			DECAL, Grille, Lower, Black
12	J575 0720-1	1			DECAL, Grille, Side, Black
13					DECAL, Jeep
	J575 6319	2			Bronze
	J576 1024	2			Burnt Orange
	J575 0564	2			Silver
14					DECAL, Cowl
					EXPORT, Diesel
	J575 0284	1			Black
	J575 7491	1			Silver
15	J576 5270	2			PROTECTOR, Scuff, Clear

(a) Insert has a Low Gloss Finish (B) Trans Pt# 8983001671-After #50100909; 8953001670-After #50100901; 8353002265-After #50100423: 8953002264-After #50100934;8953001190-After#50102878

(b) Insert has a High Gloss Finish (B) Trans Pt# 8983001671-After #50100909; 8953001670-After #50100901; 8353002265-After #50100423: 8953002264-After #50100934;8953001190-After#50102878

(c) Inside door handle located at rear of door (B) Trans Pt# 8983001671-After #50100909; 8953001670-After #50100901; 8353002265-After #50100423: 8953002264-After #50100934;8953001190-After#50102878

(d) Inside door handle located at foward part of door (B) Trans Pt# 8983001671-After #50100909; 8953001670-After #50100901; 8353002265-After #50100423: 8953002264-After #50100934;8953001190-After#50102878

(e) Used on 1984 vehicles until 11-11-83 (B) Trans Pt# 8983001671-After #50100909; 8953001670-After #50100901; 8353002265-After #50100423: 8953002264-After #50100934;8953001190-After#50102878

(f) Used on 1984 vehicles starting 11-11-83 with VIN #039651 (B) Trans Pt# 8983001671-After #50100909; 8953001670-After #50100901; 8353002265-After #50100423: 8953002264-After #50100934;8953001190-After#50102878

MODEL CODES

16=Cherokee 2 Dr.(1981-83)
17=Cherokee 2 Dr.(1981-83)
73=Cherokee 2WD-2 Dr.(1984-86)
74=Cherokee 2WD-4 Dr.(1984-86)
18=Cherokee 4 Dr.(1981-83)
77=Cherokee 4WD-2 Dr.(1984-86)
78=Cherokee 4WD-4 Dr.(1984-86)
85=CJ-5 (1981-83)
86=CJ-6(1981)
87=CJ-7(1981-86)
88=CJ-8, Scrambler(1981-86)
64=Comanche 2WD-6 Ft. Box(1986)
66=Comanche 2WD-7 Ft. Box(1986)
63=Comanche 4WD-6 Ft. Box(1986)
65=Comanche 4WD-7 Ft. Box(1986)
15=Grand Wagoneer 4 Dr.(1984-86)
25=J-10 Truck 7 Ft. Box(1981-84)
26=J10 Truck 8 Ft. Box(1981-86)
27=J-20 Truck 8 Ft. Box(1981-86)
15=Wagoneer 4 Dr.(1981-83)
75=Wagoneer 4WD-4 Dr.(1984-86)

BODY
CJ=CJ-5, CJ-6, CJ-7, CJ-8, Scrambler(1981-86)
MJ=Comanche Pickup(1986)

STYLES
SJ=Wagoneer(1981-83), Grand Wagoneer(1984-86), Cherokee(1981-83), J-10, J-20(1981-86)
XJ=Wagoneer(1984-86), Cherokee(1984-86)

AR = Use as Required - = Non Illustrated Part P.A.R. = Paint as Required

DECALS, EXTERIOR LAREDO, 1985-86 CJ-7
Figure 23-1100

81J68 1100

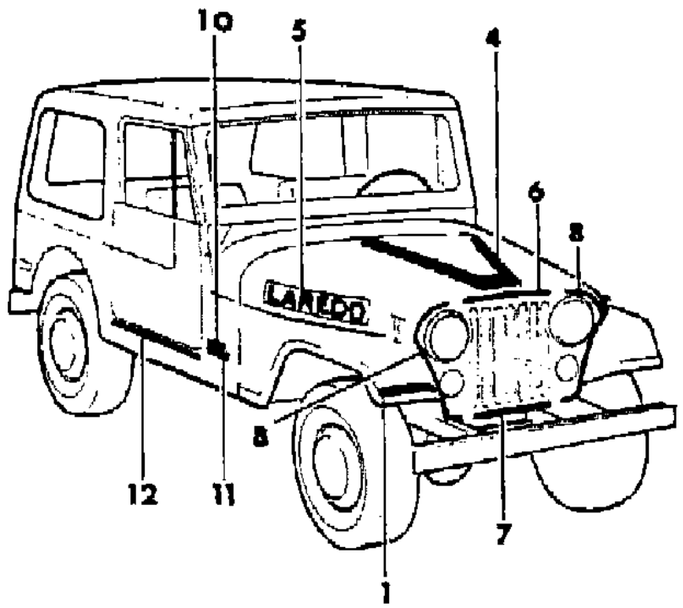

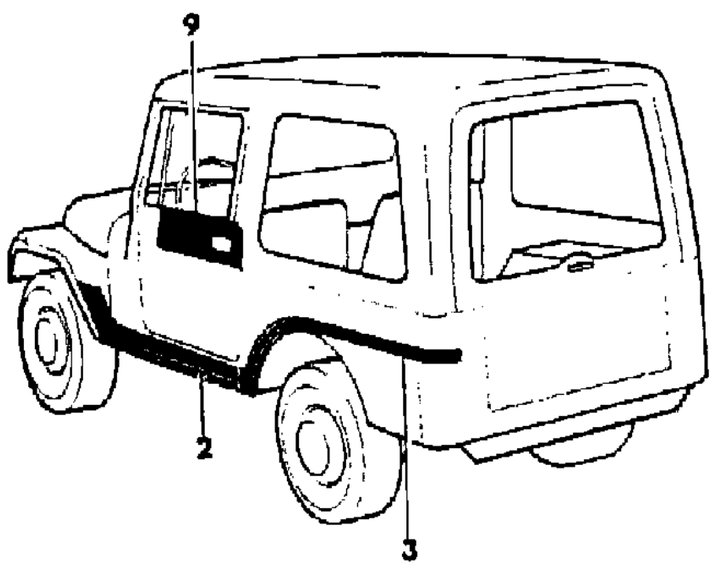

ITEM	PART NUMBER	QTY	BODY	MODEL	DESCRIPTION
1					DECAL, Fender
	J576 5452-3	1			Medium Brown/Light Brown
	J576 5450-1	1			Silver
2					DECAL, Body Side
	J576 5456-7	1			Medium Brown/Light Brown
	J576 5454-5	1			Silver
3					DECAL, Rear Quarter
	J576 5468-9	1			Medium Brown/Light Brown
	J576 5466-7	1			Silver
4					DECAL, Hood
	J576 5479	1			Medium Brown/Light Brown
	J576 5478	1			Silver
5					DECAL, Hood, Laredo
	J576 5448-9	1			Medium Brown/Light Brown
	J576 5446-7	1			Silver
6	J575 0719	1			DECAL, Grille, Upper, Black
7	J575 0722	1			DECAL, Grille, Lower, Black
8	J575 0720-1	1			DECAL, Grille, Side, Black
9					APPLIQUE, Door
	J576 4570-1	1			Black
	J576 5504-5	1			Honey
	J576 4568-9	1			White
10					DECAL, Diesel, EXPORT
	J575 0284	2			Black
	J575 7491	2			Silver
11					DECAL, Jeep
	J576 5389	2			Light Brown
	J576 5388	2			Silver
12	J576 5270	2			PROTECTOR, Scuff, Clear

MODEL CODES

16=Cherokee 2 Dr.(1981-83)
17=Cherokee 2 Dr.(1981-83)
73=Cherokee 2WD-2 Dr.(1984-86)
74=Cherokee 2WD-4 Dr.(1984-86)
18=Cherokee 4 Dr.(1981-83)
77=Cherokee 4WD-2 Dr.(1984-86)
78=Cherokee 4WD-4 Dr.(1984-86)
85=CJ-5 (1981-83)
86=CJ-6(1981)
87=CJ-7(1981-86)
88=CJ-8, Scrambler(1981-86)
64=Comanche 2WD-6 Ft. Box(1986)
66=Comanche 2WD-7 Ft. Box(1986)
63=Comanche 4WD-6 Ft. Box(1986)
65=Comanche 4WD-7 Ft. Box(1986)
15=Grand Wagoneer 4 Dr.(1984-86)
25=J-10 Truck 7 Ft. Box(1981-84)
26=J10 Truck 8 Ft. Box(1981-86)
27=J-20 Truck 8 Ft. Box(1981-86)
15=Wagoneer 4 Dr.(1981-83)
75=Wagoneer 4WD-4 Dr.(1984-86)

BODY
CJ=CJ-5, CJ-6, CJ-7, CJ-8, Scrambler(1981-86)
MJ=Comanche Pickup(1986)

STYLES
SJ=Wagoneer(1981-83), Grand Wagoneer(1984-86), Cherokee(1981-83), J-10, J-20(1981-86)
XJ=Wagoneer(1984-86), Cherokee(1984-86)

AR = Use as Required - = Non Illustrated Part P.A.R. = Paint as Required

« RETURN TO GROUP INDEX

DECALS, EXTERIOR LAREDO, EXPORT WITH WORLD CAB CJ-7
Figure 23-1200

81J68 1200

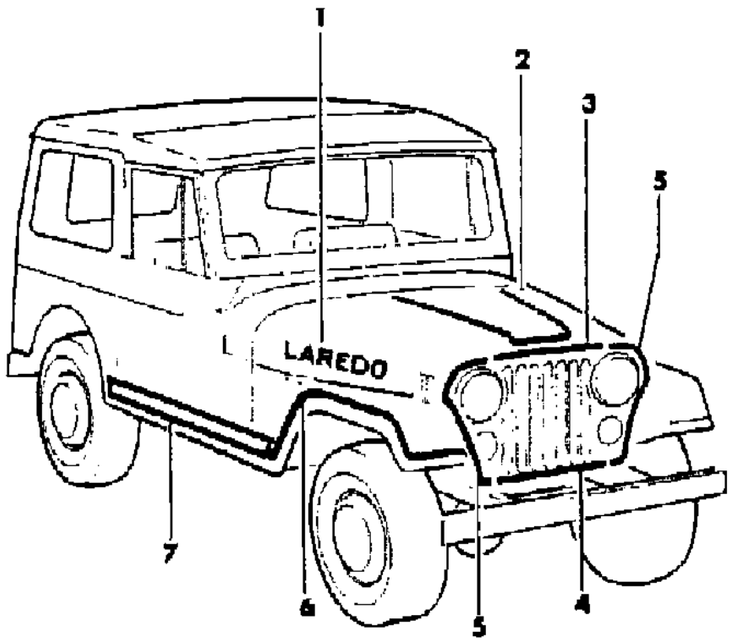

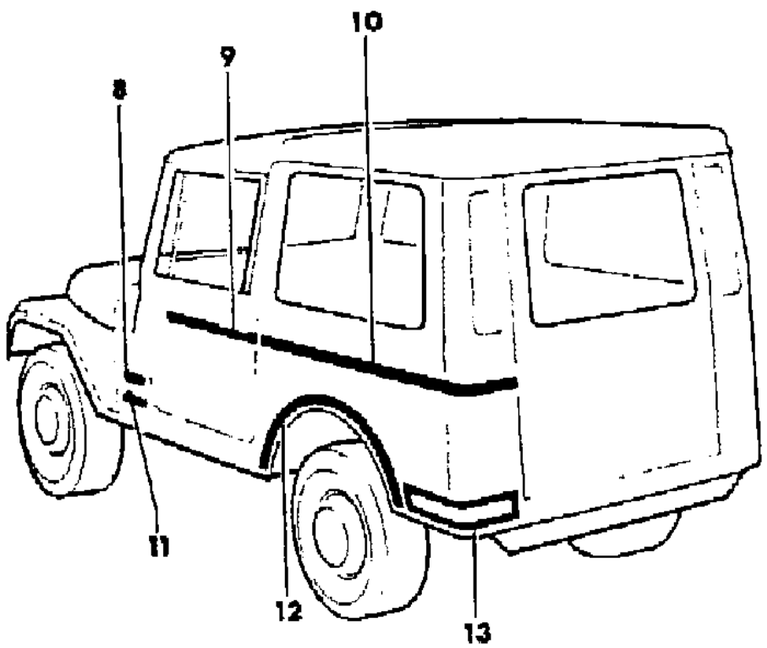

ITEM	PART NUMBER	QTY	BODY	MODEL	DESCRIPTION
1					DECAL, Hood, Laredo
	J576 1001	1			Burnt Orange/Nutmeg
	J575 4529	1			Silver
2					DECAL, Hood
	J576 0440	1			Burnt Orange/Nutmeg
	J575 0705	1			Silver
3	J575 0719	1			DECAL, Grille, Upper, Black
4	J575 0722	1			DECAL, Grille, Lower, Black
5	J575 0720-1	1			DECAL, Grille, Side, Black
6					DECAL, Fender
					Right
	J576 0432	1			Burnt Orange/Nutmeg
	J575 0690	1			Silver
					Left
	J576 0433	1			Burnt Orange/Nutmeg
	J575 0689	1			Silver
7					DECAL, Body Side
					Right
	J576 1004	1			Burnt Orange/Nutmeg
	J575 0694	1			Silver
					Left
	J576 1005	1			Burnt Orange/Nutmeg
	J575 0693	1			Silver
8					DECAL, Diesel
	J575 0284	1			Black
	J575 7491	1			Silver
9					DECAL, Door
					Right
	J805 3098	1			Burnt Orange/Nutmeg
	J805 3100	1			Silver
					Left
	J805 3097	1			Burnt Orange/Nutmeg
	J805 3099	1			Silver
10					DECAL, Rear Quarter
					Right
	J805 3114	1			Burnt Orange/Nutmeg
	J805 3116	1			Silver
					Left
	J805 3113	1			Burnt Orange/Nutmeg

MODEL CODES

16=Cherokee 2 Dr.(1981-83)
17=Cherokee 2 Dr.(1981-83)
73=Cherokee 2WD-2 Dr.(1984-86)
74=Cherokee 2WD-4 Dr.(1984-86)
18=Cherokee 4 Dr.(1981-83)
77=Cherokee 4WD-2 Dr.(1984-86)
78=Cherokee 4WD-4 Dr.(1984-86)
85=CJ-5 (1981-83)
86=CJ-6(1981)
87=CJ-7(1981-86)
88=CJ-8, Scrambler(1981-86)
64=Comanche 2WD-6 Ft. Box(1986)
66=Comanche 2WD-7 Ft. Box(1986)
63=Comanche 4WD-6 Ft. Box(1986)
65=Comanche 4WD-7 Ft. Box(1986)
15=Grand Wagoneer 4 Dr.(1984-86)
25=J-10 Truck 7 Ft. Box(1981-84)
26=J10 Truck 8 Ft. Box(1981-86)
27=J-20 Truck 8 Ft. Box(1981-86)
15=Wagoneer 4 Dr.(1981-83)
75=Wagoneer 4WD-4 Dr.(1984-86)

BODY
CJ=CJ-5, CJ-6, CJ-7, CJ-8, Scrambler(1981-86)
MJ=Comanche Pickup(1986)

STYLES
SJ=Wagoneer(1981-83), Grand Wagoneer(1984-86), Cherokee(1981-83), J-10, J-20(1981-86)
XJ=Wagoneer(1984-86), Cherokee(1984-86)

AR = Use as Required - = Non Illustrated Part P.A.R. = Paint as Required

DECALS, EXTERIOR LAREDO, EXPORT WITH WORLD CAB CJ-7
Figure 23-1200

81J68 1200

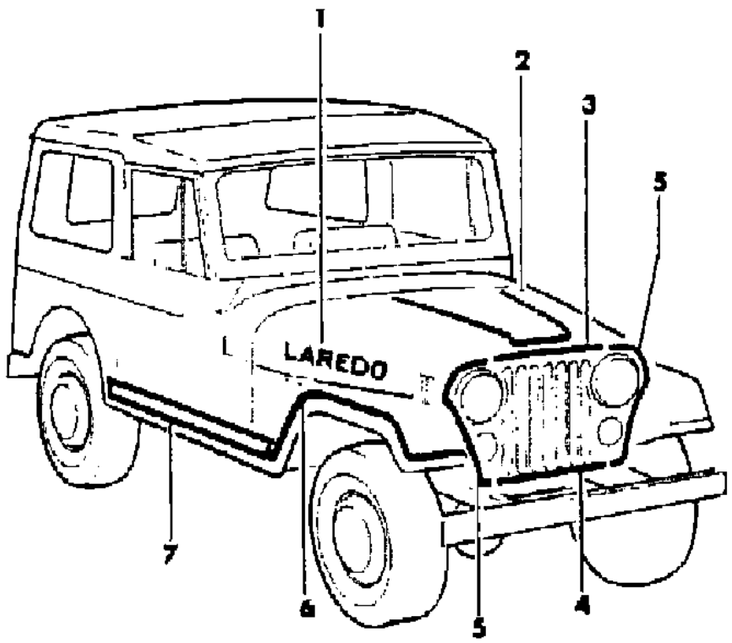

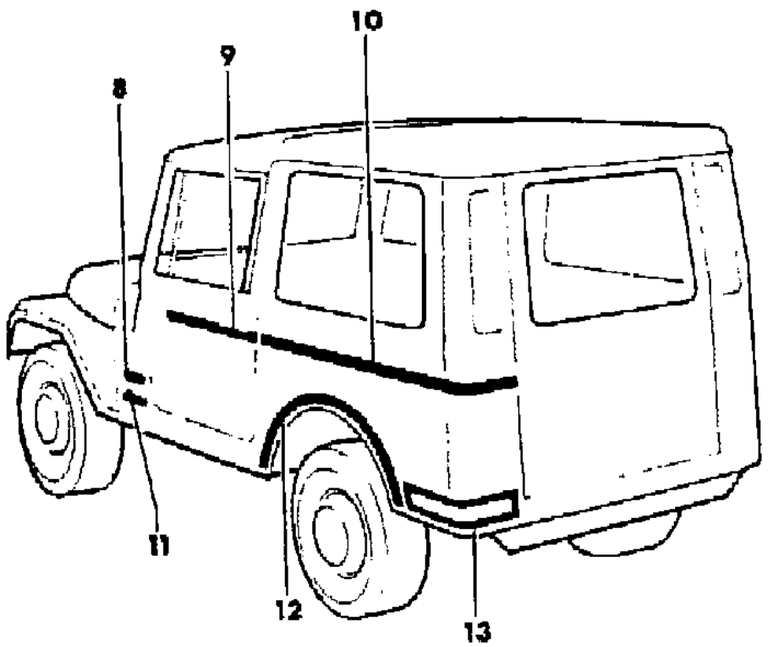

ITEM	PART NUMBER	QTY	BODY	MODEL	DESCRIPTION
	J805 3115	1			Silver
11					DECAL, Jeep
	J576 1024	1			Burnt Orange/Nutmeg
	J575 0564	1			Silver
12					DECAL, Wheel Opening
					Right
	J576 1008	1			Burnt Orange/Nutmeg
	J575 0702	1			Silver
					Left
	J576 1009	1			Burnt Orange/Nutmeg
	J575 0701	1			Silver
13					DECAL, Rear Quarter
					Right
	J576 1006	1			Burnt Orange/Nutmeg
	J575 0698	1			Silver
					Left
	J576 1007	1			Burnt Orange/Nutmeg
	J575 0697	1			Silver

MODEL CODES

16=Cherokee 2 Dr.(1981-83)
17=Cherokee 2 Dr.(1981-83)
73=Cherokee 2WD-2 Dr.(1984-86)
74=Cherokee 2WD-4 Dr.(1984-86)
18=Cherokee 4 Dr.(1981-83)
77=Cherokee 4WD-2 Dr.(1984-86)
78=Cherokee 4WD-4 Dr.(1984-86)
85=CJ-5 (1981-83)
86=CJ-6(1981)
87=CJ-7(1981-86)
88=CJ-8, Scrambler(1981-86)
64=Comanche 2WD-6 Ft. Box(1986)
66=Comanche 2WD-7 Ft. Box(1986)
63=Comanche 4WD-6 Ft. Box(1986)
65=Comanche 4WD-7 Ft. Box(1986)
15=Grand Wagoneer 4 Dr.(1984-86)
25=J-10 Truck 7 Ft. Box(1981-84)
26=J10 Truck 8 Ft. Box(1981-86)
27=J-20 Truck 8 Ft. Box(1981-86)
15=Wagoneer 4 Dr.(1981-83)
75=Wagoneer 4WD-4 Dr.(1984-86)

BODY
CJ=CJ-5, CJ-6, CJ-7, CJ-8, Scrambler(1981-86)
MJ=Comanche Pickup(1986)

STYLES
SJ=Wagoneer(1981-83), Grand Wagoneer(1984-86), Cherokee(1981-83), J-10, J-20(1981-86)
XJ=Wagoneer(1984-86), Cherokee(1984-86)

AR = Use as Required - = Non Illustrated Part P.A.R. = Paint as Required

DECALS, EXTERIOR LIMITED, 1982-83 CJ-7
Figure 23-1300

81J68 1300

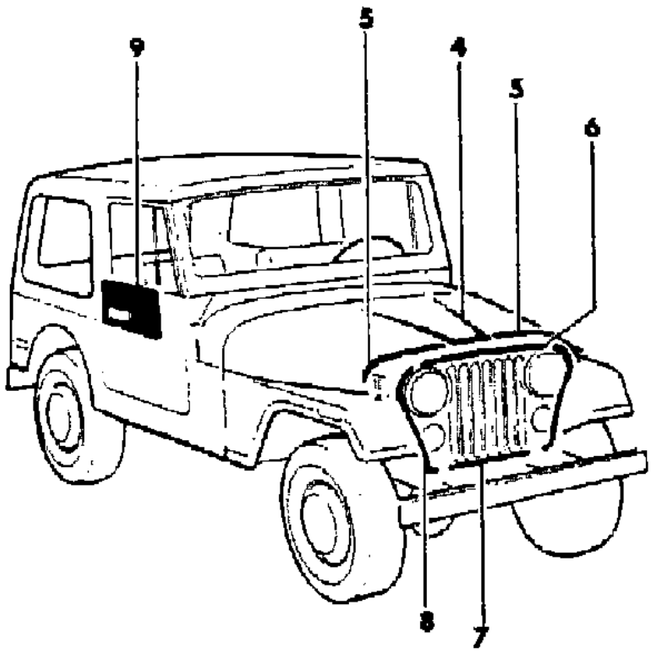

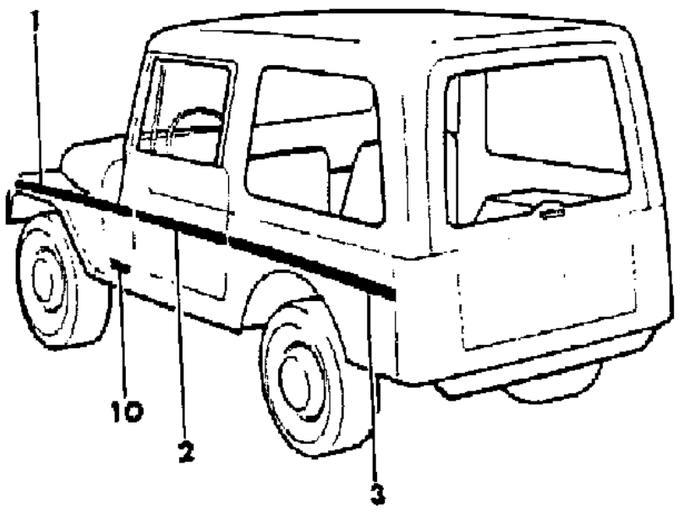

ITEM	PART NUMBER	QTY	BODY	MODEL	DESCRIPTION
1					DECAL, Fender
	J576 1814-5	1			Beige/Orange
	J576 1816-7	1			Light Blue/Navy Blue
2					DECAL, Door
	J576 1818-9	1			Beige/Orange
	J576 1820-1	1			Light Blue/Navy Blue
3					DECAL, Rear Quarter
	J576 1822-3	1			Beige/Orange
	J576 1824-5	1			Light Blue/Navy Blue
4					DECAL, Hood
	J576 1808	1			Beige/Orange
	J576 1809	1			Light Blue/Navy Blue
5					DECAL, Hood
	J576 1810-1	1			Beige/Orange
	J576 1812-3	1			Light Blue/Navy Blue
6					DECAL, Grille, Upper
	J576 1806	1			Orange
	J576 1807	1			Navy Blue
7					DECAL, Grille, Lower
	J576 1800	1			Orange
	J576 1801	1			Navy Blue
8					DECAL, Grille, Side
	J576 1802-3	1			Orange
	J576 1804-5	1			Navy Blue
9					APPLIQUE, Door
	J576 0250-1	1			Nutmeg
	J576 0718-9	1			Slate Blue
	J576 0716-7	1			Silver
	J576 0756-7	1			White
10					DECAL, Jeep
	J576 1024	2			Burnt Orange
	J576 0845	2			Navy, Blue

MODEL CODES

16=Cherokee 2 Dr.(1981-83)
17=Cherokee 2 Dr.(1981-83)
73=Cherokee 2WD-2 Dr.(1984-86)
74=Cherokee 2WD-4 Dr.(1984-86)
18=Cherokee 4 Dr.(1981-83)
77=Cherokee 4WD-2 Dr.(1984-86)
78=Cherokee 4WD-4 Dr.(1984-86)
85=CJ-5 (1981-83)
86=CJ-6(1981)
87=CJ-7(1981-86)
88=CJ-8, Scrambler(1981-86)
64=Comanche 2WD-6 Ft. Box(1986)
66=Comanche 2WD-7 Ft. Box(1986)
63=Comanche 4WD-6 Ft. Box(1986)
65=Comanche 4WD-7 Ft. Box(1986)
15=Grand Wagoneer 4 Dr.(1984-86)
25=J-10 Truck 7 Ft. Box(1981-84)
26=J10 Truck 8 Ft. Box(1981-86)
27=J-20 Truck 8 Ft. Box(1981-86)
15=Wagoneer 4 Dr.(1981-83)
75=Wagoneer 4WD-4 Dr.(1984-86)

BODY
CJ=CJ-5, CJ-6, CJ-7, CJ-8, Scrambler(1981-86)
MJ=Comanche Pickup(1986)

STYLES
SJ=Wagoneer(1981-83), Grand Wagoneer(1984-86), Cherokee(1981-83), J-10, J-20(1981-86)
XJ=Wagoneer(1984-86), Cherokee(1984-86)

AR = Use as Required - = Non Illustrated Part P.A.R. = Paint as Required

« RETURN TO GROUP INDEX

DECALS, EXTERIOR 1981 SUPERSTAR, 1982 SUNBURST CJ-7
Figure 23-1400

81J68 1400

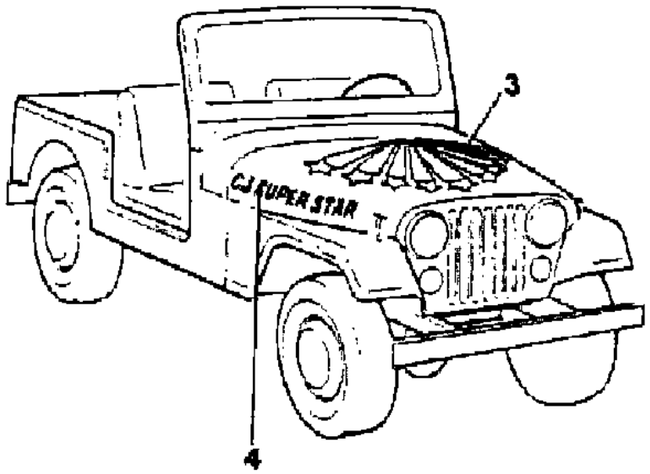

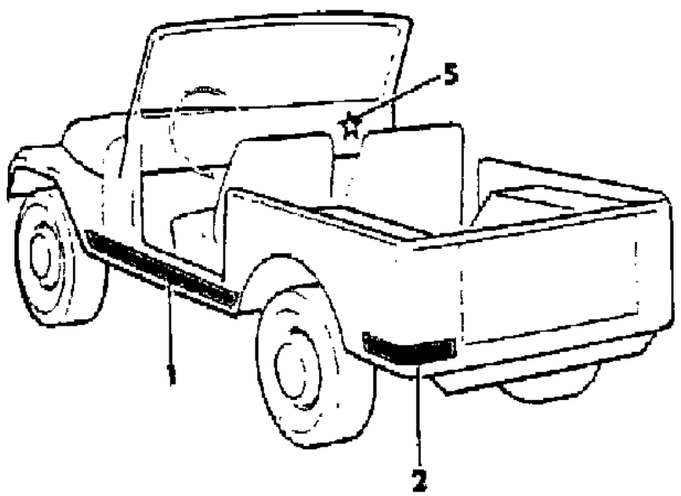

ITEM	PART NUMBER	QTY	BODY	MODEL	DESCRIPTION
1	J576 3578-9	1			DECAL, Body Side
2	J576 3580-1	1			DECAL, Cargo Box Side
3	J576 3577	1			DECAL, Hood
4	J813 4250-1	1			DECAL, Hood, Superstar
5	J576 3582	1			DECAL, Instrument Panel

MODEL CODES

16=Cherokee 2 Dr.(1981-83)
17=Cherokee 2 Dr.(1981-83)
73=Cherokee 2WD-2 Dr.(1984-86)
74=Cherokee 2WD-4 Dr.(1984-86)
18=Cherokee 4 Dr.(1981-83)
77=Cherokee 4WD-2 Dr.(1984-86)
78=Cherokee 4WD-4 Dr.(1984-86)
85=CJ-5 (1981-83)
86=CJ-6(1981)
87=CJ-7(1981-86)
88=CJ-8, Scrambler(1981-86)
64=Comanche 2WD-6 Ft. Box(1986)
66=Comanche 2WD-7 Ft. Box(1986)
63=Comanche 4WD-6 Ft. Box(1986)
65=Comanche 4WD-7 Ft. Box(1986)
15=Grand Wagoneer 4 Dr.(1984-86)
25=J-10 Truck 7 Ft. Box(1981-84)
26=J10 Truck 8 Ft. Box(1981-86)
27=J-20 Truck 8 Ft. Box(1981-86)
15=Wagoneer 4 Dr.(1981-83)
75=Wagoneer 4WD-4 Dr.(1984-86)

BODY
CJ=CJ-5, CJ-6, CJ-7, CJ-8, Scrambler(1981-86)
MJ=Comanche Pickup(1986)

STYLES
SJ=Wagoneer(1981-83), Grand Wagoneer(1984-86), Cherokee(1981-83), J-10, J-20(1981-86)
XJ=Wagoneer(1984-86), Cherokee(1984-86)

AR = Use as Required - = Non Illustrated Part P.A.R. = Paint as Required

« RETURN TO GROUP INDEX

DECALS, EXTERIOR JAMBOREE, 1982 CJ-7
Figure 23-1500

81J68 1500

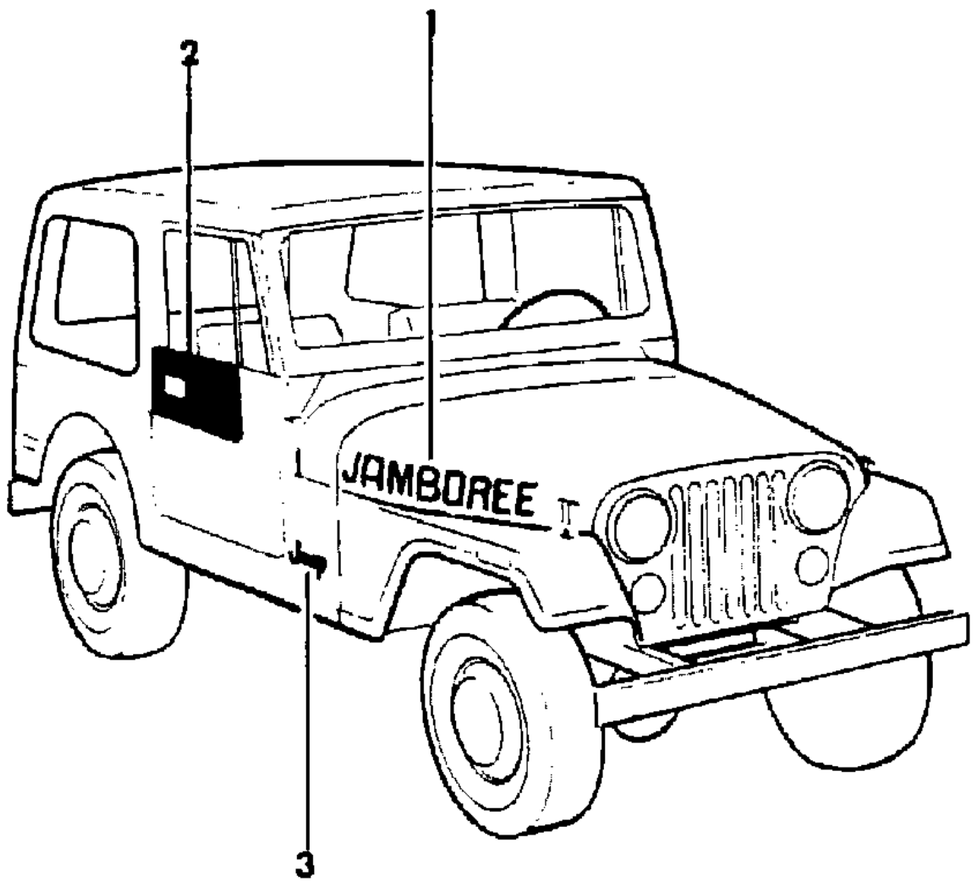

ITEM	PART NUMBER	QTY	BODY	MODEL	DESCRIPTION
1	J576 3052-3	1			DECAL, Hood
2	J575 7648-9	1			APPLIQUE, Door
3	J576 1024	2			DECAL, Jeep, Burnt Orange

MODEL CODES

16=Cherokee 2 Dr.(1981-83)
17=Cherokee 2 Dr.(1981-83)
73=Cherokee 2WD-2 Dr.(1984-86)
74=Cherokee 2WD-4 Dr.(1984-86)
18=Cherokee 4 Dr.(1981-83)
77=Cherokee 4WD-2 Dr.(1984-86)
78=Cherokee 4WD-4 Dr.(1984-86)
85=CJ-5 (1981-83)
86=CJ-6(1981)
87=CJ-7(1981-86)
88=CJ-8, Scrambler(1981-86)
64=Comanche 2WD-6 Ft. Box(1986)
66=Comanche 2WD-7 Ft. Box(1986)
63=Comanche 4WD-6 Ft. Box(1986)
65=Comanche 4WD-7 Ft. Box(1986)
15=Grand Wagoneer 4 Dr.(1984-86)
25=J-10 Truck 7 Ft. Box(1981-84)
26=J10 Truck 8 Ft. Box(1981-86)
27=J-20 Truck 8 Ft. Box(1981-86)
15=Wagoneer 4 Dr.(1981-83)
75=Wagoneer 4WD-4 Dr.(1984-86)

BODY
CJ=CJ-5, CJ-6, CJ-7, CJ-8, Scrambler(1981-86)
MJ=Comanche Pickup(1986)

STYLES
SJ=Wagoneer(1981-83), Grand Wagoneer(1984-86), Cherokee(1981-83), J-10, J-20(1981-86)
XJ=Wagoneer(1984-86), Cherokee(1984-86)

AR = Use as Required - = Non Illustrated Part P.A.R. = Paint as Required

« RETURN TO GROUP INDEX

DECALS, EXTERIOR SPRING PROMOTION, 1985 CJ-7
Figure 23-1600

81J68 1600

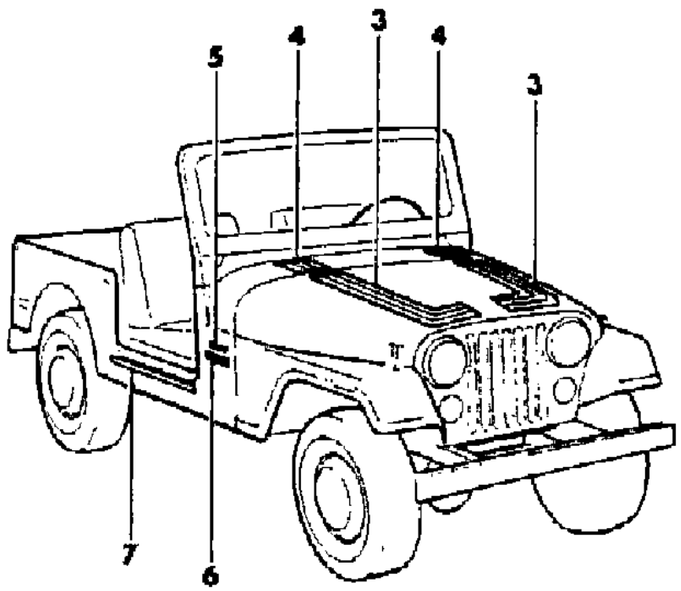

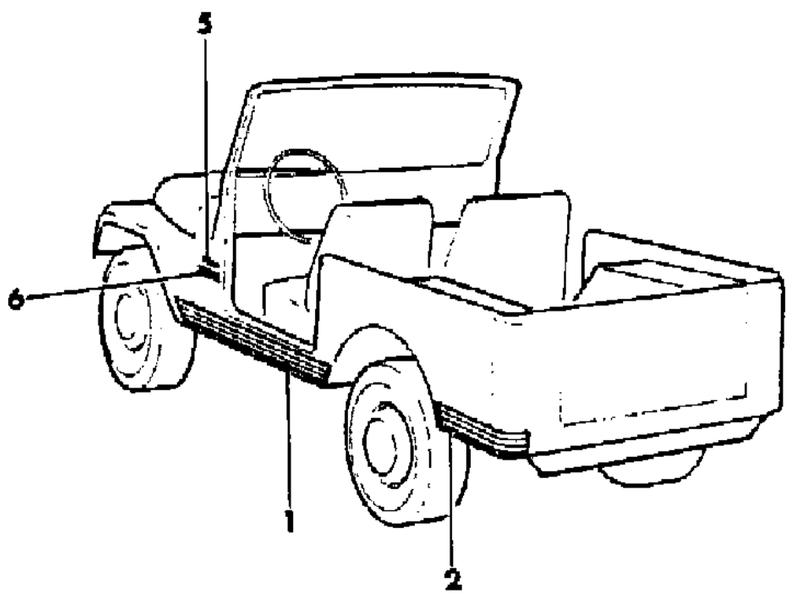

ITEM	PART NUMBER	QTY	BODY	MODEL	DESCRIPTION
1	5500 9636-7	1			DECAL, Body Side
2	5500 9642-3	1			DECAL, Cargo Box Side
3	5500 9638-9	1			DECAL, Hood
4	5500 9640-1	1			DECAL, Cowl
5					DECAL, Cowl, Diesel
	J575 0284	2			Black, EXPORT
	J575 7491	2			Silver, EXPORT
6	5500 9645	2			DECAL, Jeep
7	J576 5270	2			PROTECTOR, Scuff, Clear

MODEL CODES

16=Cherokee 2 Dr.(1981-83)
17=Cherokee 2 Dr.(1981-83)
73=Cherokee 2WD-2 Dr.(1984-86)
74=Cherokee 2WD-4 Dr.(1984-86)
18=Cherokee 4 Dr.(1981-83)
77=Cherokee 4WD-2 Dr.(1984-86)
78=Cherokee 4WD-4 Dr.(1984-86)
85=CJ-5 (1981-83)
86=CJ-6(1981)
87=CJ-7(1981-86)
88=CJ-8, Scrambler(1981-86)
64=Comanche 2WD-6 Ft. Box(1986)
66=Comanche 2WD-7 Ft. Box(1986)
63=Comanche 4WD-6 Ft. Box(1986)
65=Comanche 4WD-7 Ft. Box(1986)
15=Grand Wagoneer 4 Dr.(1984-86)
25=J-10 Truck 7 Ft. Box(1981-84)
26=J10 Truck 8 Ft. Box(1981-86)
27=J-20 Truck 8 Ft. Box(1981-86)
15=Wagoneer 4 Dr.(1981-83)
75=Wagoneer 4WD-4 Dr.(1984-86)

BODY
CJ=CJ-5, CJ-6, CJ-7, CJ-8, Scrambler(1981-86)
MJ=Comanche Pickup(1986)

STYLES
SJ=Wagoneer(1981-83), Grand Wagoneer(1984-86), Cherokee(1981-83), J-10, J-20(1981-86)
XJ=Wagoneer(1984-86), Cherokee(1984-86)

AR = Use as Required - = Non Illustrated Part P.A.R. = Paint as Required

« RETURN TO GROUP INDEX

DECALS, EXTERIOR BASE SCRAMBLER
Figure 23-1700

81J68 1700

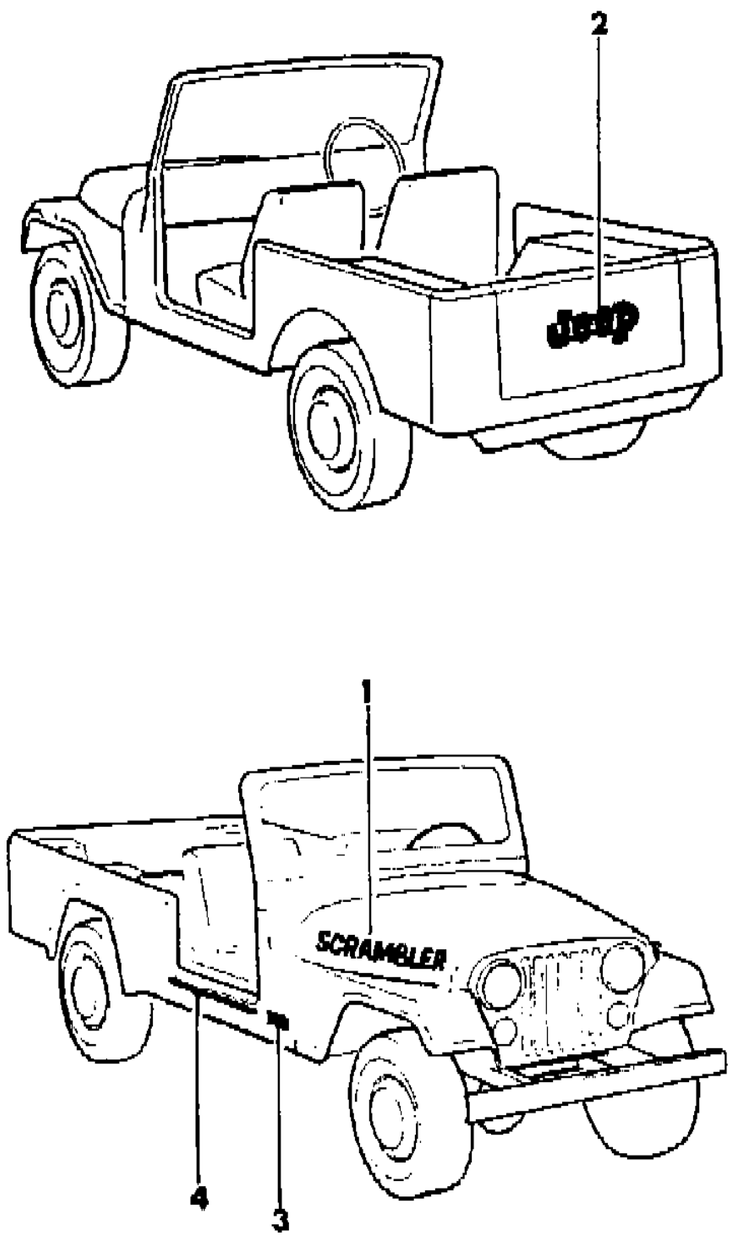

ITEM	PART NUMBER	QTY	BODY	MODEL	DESCRIPTION
1					DECAL, Hood
	J576 0418-9	1			Black
	J576 0420-1	1			White
2					DECAL, Jeep, Rear
	J576 1895	1			Black
	J576 1896	1			White
3					DECAL, Jeep
	J546 1682	2			Black
	J546 1681	2			White
4	J576 5270	2			PROTECTOR, Scuff, Clear

MODEL CODES

16=Cherokee 2 Dr.(1981-83)
17=Cherokee 2 Dr.(1981-83)
73=Cherokee 2WD-2 Dr.(1984-86)
74=Cherokee 2WD-4 Dr.(1984-86)
18=Cherokee 4 Dr.(1981-83)
77=Cherokee 4WD-2 Dr.(1984-86)
78=Cherokee 4WD-4 Dr.(1984-86)
85=CJ-5 (1981-83)
86=CJ-6(1981)
87=CJ-7(1981-86)
88=CJ-8, Scrambler(1981-86)
64=Comanche 2WD-6 Ft. Box(1986)
66=Comanche 2WD-7 Ft. Box(1986)
63=Comanche 4WD-6 Ft. Box(1986)
65=Comanche 4WD-7 Ft. Box(1986)
15=Grand Wagoneer 4 Dr.(1984-86)
25=J-10 Truck 7 Ft. Box(1981-84)
26=J10 Truck 8 Ft. Box(1981-86)
27=J-20 Truck 8 Ft. Box(1981-86)
15=Wagoneer 4 Dr.(1981-83)
75=Wagoneer 4WD-4 Dr.(1984-86)

BODY
CJ=CJ-5, CJ-6, CJ-7, CJ-8, Scrambler(1981-86)
MJ=Comanche Pickup(1986)

STYLES
SJ=Wagoneer(1981-83), Grand Wagoneer(1984-86), Cherokee(1981-83), J-10, J-20(1981-86)
XJ=Wagoneer(1984-86), Cherokee(1984-86)

AR = Use as Required - = Non Illustrated Part P.A.R. = Paint as Required

« RETURN TO GROUP INDEX

DECALS, EXTERIOR SR SPORT, 1981-82 SCRAMBLER
Figure 23-1800

81J68 1800

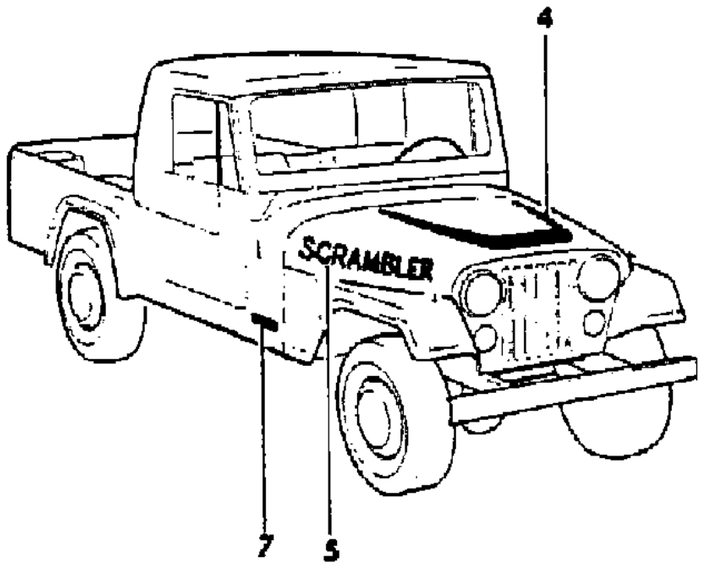

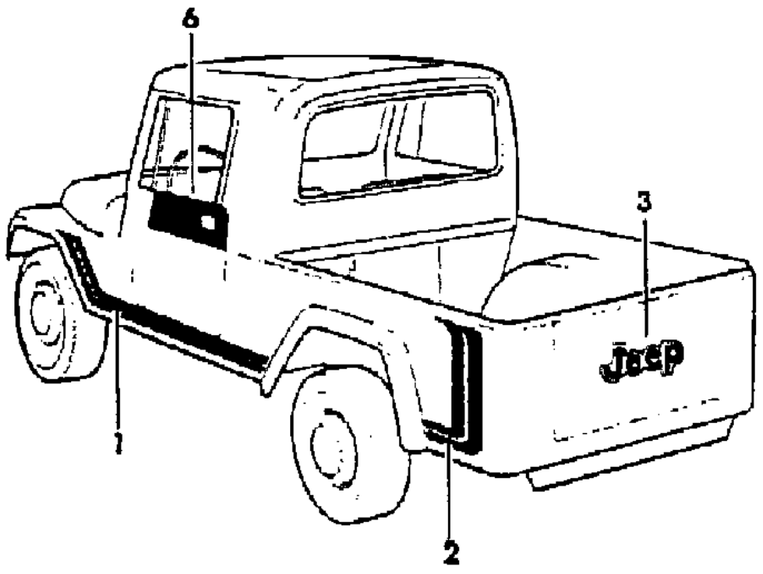

ITEM	PART NUMBER	QTY	BODY	MODEL	DESCRIPTION
1					DECAL, Body Side
	J575 7774-5	1			Blues
	J575 7772-3	1			Oranges
	J575 7776-7	1			Yellows
2					DECAL, Cargo Box Side
	J575 7780-1	1			Blues
	J575 7778-9	1			Oranges
	J575 7782-3	1			Yellows
3					DECAL, Jeep, Rear
	J576 1893	1			Blues
	J576 1892	1			Oranges
	J576 1894	1			Yelloes
4					DECAL, Hood
	J575 7791	1			Blues
	J575 7790	1			Oranges
	J575 7792	1			Yellows
5					DECAL, Hood, Scrambler
	J576 0464-5	1			Blues
	J576 0462-3	1			Oranges
	J576 0506-7	1			Yellows
6					APPLIQUE, Door
	J575 7648-9	1			Black
	J576 0250-1	1			Nutmeg
	J576 0756-7	1			White
7					DECAL, Jeep
	J546 1682	2			Black
	J546 1681	2			White

MODEL CODES

16=Cherokee 2 Dr.(1981-83)	78=Cherokee 4WD-4 Dr.(1984-86)	64=Comanche 2WD-6 Ft. Box(1986)	25=J-10 Truck 7 Ft. Box(1981-84)
17=Cherokee 2 Dr.(1981-83)	85=CJ-5 (1981-83)	66=Comanche 2WD-7 Ft. Box(1986)	26=J10 Truck 8 Ft. Box(1981-86)
73=Cherokee 2WD-2 Dr.(1984-86)	86=CJ-6(1981)	63=Comanche 4WD-6 Ft. Box(1986)	27=J-20 Truck 8 Ft. Box(1981-86)
74=Cherokee 2WD-4 Dr.(1984-86)	87=CJ-7(1981-86)	65=Comanche 4WD-7 Ft. Box(1986)	15=Wagoneer 4 Dr.(1981-83)
18=Cherokee 4 Dr.(1981-83)	88=CJ-8, Scrambler(1981-86)	15=Grand Wagoneer 4 Dr.(1984-86)	75=Wagoneer 4WD-4 Dr.(1984-86)
77=Cherokee 4WD-2 Dr.(1984-86)			

BODY
CJ=CJ-5, CJ-6, CJ-7, CJ-8, Scrambler(1981-86)
MJ=Comanche Pickup(1986)

STYLES
SJ=Wagoneer(1981-83), Grand Wagoneer(1984-86), Cherokee(1981-83), J-10, J-20(1981-86)
XJ=Wagoneer(1984-86), Cherokee(1984-86)

AR = Use as Required - = Non Illustrated Part P.A.R. = Paint as Required

« RETURN TO GROUP INDEX

DECALS, EXTERIOR SR SPORT, 1983-84 SCRAMBLER
Figure 23-1900

81J68 1900

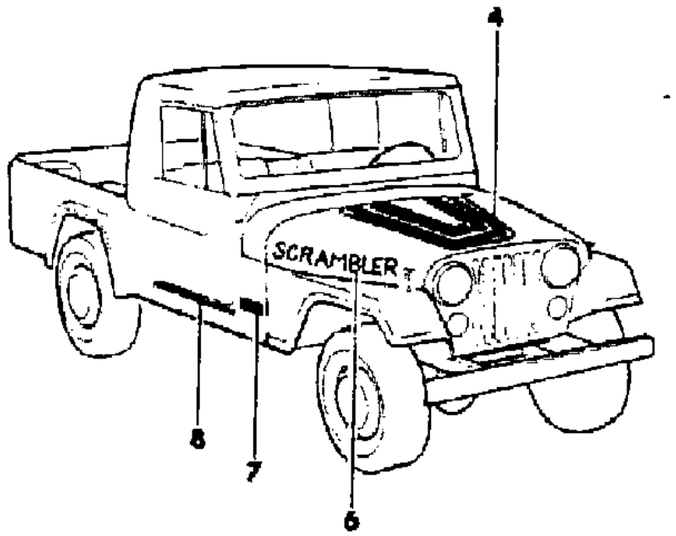

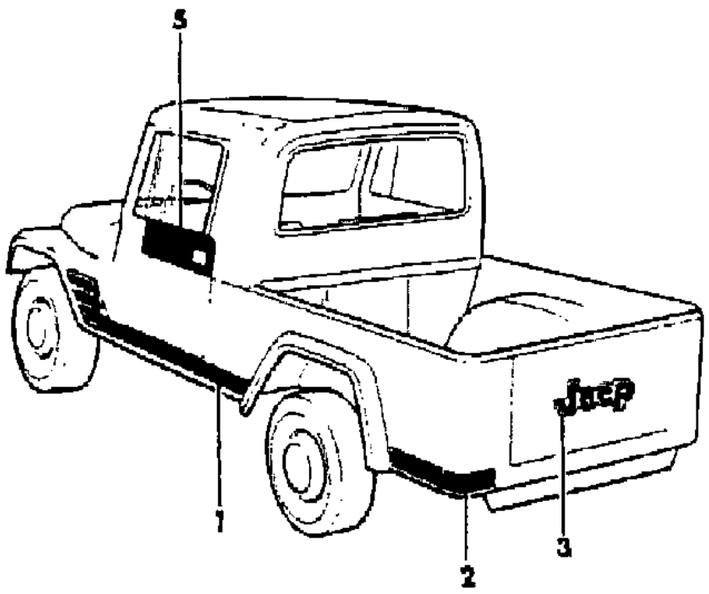

ITEM	PART NUMBER	QTY	BODY	MODEL	DESCRIPTION
1					DECAL, Body Side
	J576 3036-7	1			Blues (a)
	J576 3032-3	1			Reds (a)
	J576 4364-5	1			Blues (b)
	J576 4360-1	1			Oranges (b)
	J576 3040-1	1			Yellows
2					DECAL,Cargo Box Side
	J576 3038-9	1			Blues (a)
	J576 3034-5	1			Reds (a)
	J576 4366-7	1			Blues (b)
	J576 4362-3	1			Oranges (b)
	J576 3042-3	1			Yellows
3					DECAL, Jeep, Rear
	J576 1893	1			Blues (a)
	J576 1892	1			Reds (a)
	J576 4369	1			Blues (b)
	J576 4368	1			Oranges (b)
	J576 1894	1			Yellows
4					DECAL, Hood
	J576 3006	1			Blues (a)
	J576 3005	1			Reds (a)
	J576 4339	1			Blues (b)
	J576 4338	1			Oranges (b)
	J576 3007	1			Yellows
5					APPLIQUE, Door
					1983
	J576 0250-1	1			Nutmeg
	J576 0756-7	1			White
					1983-84
	J575 7648-9	1			Black (c)
					1984
	J576 4570-1	1			Black (d)
	J576 4572-3	1			Nutmeg
	J576 4568-9	1			White
6					DECAL, Hood, Scrambler
	J576 3218-9	1			Blues (a)
	J576 3216-7	1			Reds (a)
	J576 4346-7	1			Blues (b)
	J576 4344-5	1			Oranges (b)

MODEL CODES

16=Cherokee 2 Dr.(1981-83)
17=Cherokee 2 Dr.(1981-83)
73=Cherokee 2WD-2 Dr.(1984-86)
74=Cherokee 2WD-4 Dr.(1984-86)
18=Cherokee 4 Dr.(1981-83)
77=Cherokee 4WD-2 Dr.(1984-86)
78=Cherokee 4WD-4 Dr.(1984-86)
85=CJ-5 (1981-83)
86=CJ-6(1981)
87=CJ-7(1981-86)
88=CJ-8, Scrambler(1981-86)
64=Comanche 2WD-6 Ft. Box(1986)
66=Comanche 2WD-7 Ft. Box(1986)
63=Comanche 4WD-6 Ft. Box(1986)
65=Comanche 4WD-7 Ft. Box(1986)
15=Grand Wagoneer 4 Dr.(1984-86)
25=J-10 Truck 7 Ft. Box(1981-84)
26=J10 Truck 8 Ft. Box(1981-86)
27=J-20 Truck 8 Ft. Box(1981-86)
15=Wagoneer 4 Dr.(1981-83)
75=Wagoneer 4WD-4 Dr.(1984-86)

BODY
CJ=CJ-5, CJ-6, CJ-7, CJ-8, Scrambler(1981-86)
MJ=Comanche Pickup(1986)

STYLES
SJ=Wagoneer(1981-83), Grand Wagoneer(1984-86), Cherokee(1981-83), J-10, J-20(1981-86)
XJ=Wagoneer(1984-86), Cherokee(1984-86)

AR = Use as Required - = Non Illustrated Part P.A.R. = Paint as Required

DECALS, EXTERIOR SR SPORT, 1983-84 SCRAMBLER
Figure 23-1900

81J68 1900

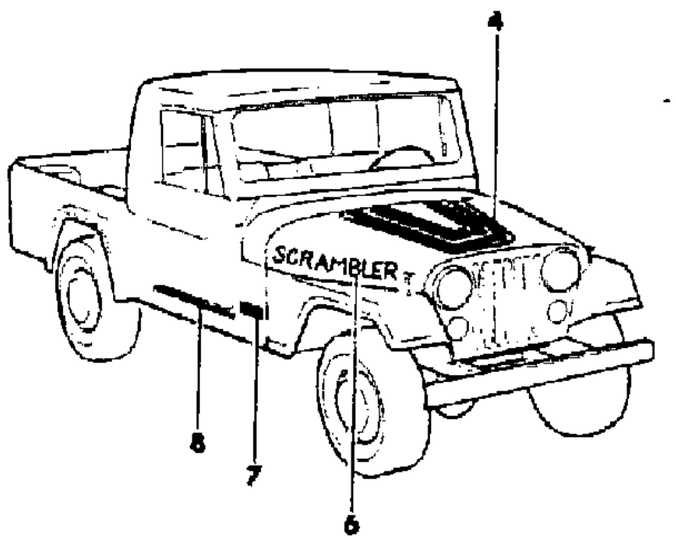

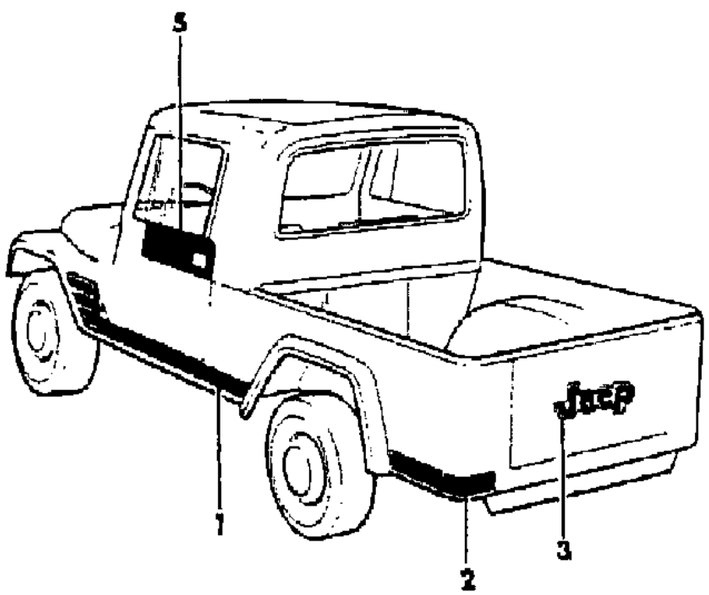

ITEM	PART NUMBER	QTY	BODY	MODEL	DESCRIPTION
	J576 3220-1	1			Yellows
7					DECAL, Jeep
	J576 1024	2			Burnt Orange
	J546 1682	2			Black
	J546 1681	2			White
8	J576 5270	2			PROTECTOR, Scuff, Clear

(a) Used on 1983 Vehicles until 5/1/83 (B) Trans Pt# 8983001671-After #50100909; 8953001670-After #50100901; 8353002265-After #50100423: 8953002264-After #50100934;8953001190-After#50102878

(b) Used on 1983 vehicles, beginning 5-1-83 (B) Trans Pt# 8983001671-After #50100909; 8953001670-After #50100901; 8353002265-After #50100423: 8953002264-After #50100934;8953001190-After#50102878

(c) Used on 1984 vehicles until 11-11-83, VIN No. 039650 (B) Trans Pt# 8983001671-After #50100909; 8953001670-After #50100901; 8353002265-After #50100423: 8953002264-After #50100934;8953001190-After#50102878

(d) Used on 1984 vehicles, beginning on 11-11-83, VIN No. 039651 (B) Trans Pt# 8983001671-After #50100909; 8953001670-After #50100901; 8353002265-After #50100423: 8953002264-After #50100934;8953001190-After#50102878

MODEL CODES

16=Cherokee 2 Dr.(1981-83)
17=Cherokee 2 Dr.(1981-83)
73=Cherokee 2WD-2 Dr.(1984-86)
74=Cherokee 2WD-4 Dr.(1984-86)
18=Cherokee 4 Dr.(1981-83)
77=Cherokee 4WD-2 Dr.(1984-86)
78=Cherokee 4WD-4 Dr.(1984-86)
85=CJ-5 (1981-83)
86=CJ-6(1981)
87=CJ-7(1981-86)
88=CJ-8, Scrambler(1981-86)
64=Comanche 2WD-6 Ft. Box(1986)
66=Comanche 2WD-7 Ft. Box(1986)
63=Comanche 4WD-6 Ft. Box(1986)
65=Comanche 4WD-7 Ft. Box(1986)
15=Grand Wagoneer 4 Dr.(1984-86)
25=J-10 Truck 7 Ft. Box(1981-84)
26=J10 Truck 8 Ft. Box(1981-86)
27=J-20 Truck 8 Ft. Box(1981-86)
15=Wagoneer 4 Dr.(1981-83)
75=Wagoneer 4WD-4 Dr.(1984-86)

BODY
CJ=CJ-5, CJ-6, CJ-7, CJ-8, Scrambler(1981-86)
MJ=Comanche Pickup(1986)

STYLES
SJ=Wagoneer(1981-83), Grand Wagoneer(1984-86), Cherokee(1981-83), J-10, J-20(1981-86)
XJ=Wagoneer(1984-86), Cherokee(1984-86)

AR = Use as Required - = Non Illustrated Part P.A.R. = Paint as Required

« RETURN TO GROUP INDEX

DECALS, EXTERIOR RENEGADE, 1985-86 SCRAMBLER
Figure 23-2000

81J68 2000

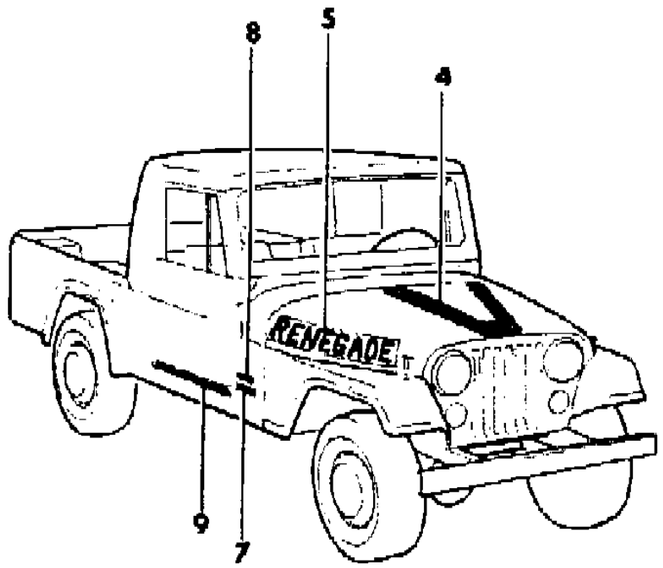

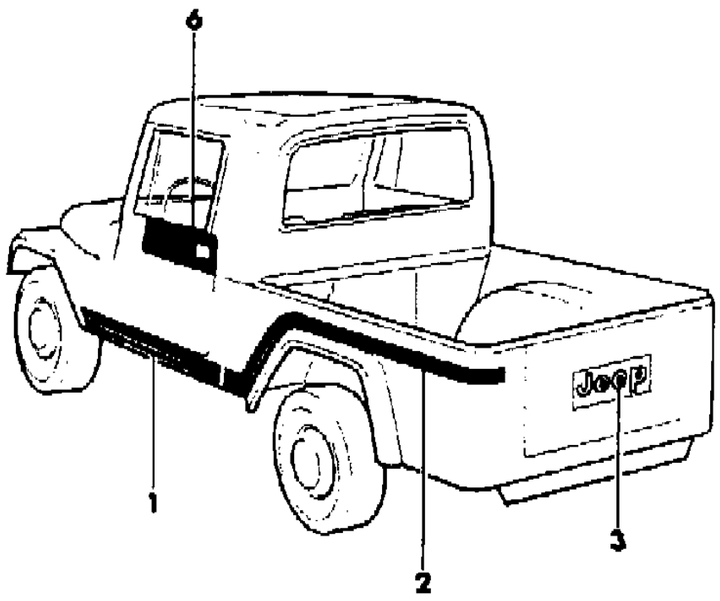

ITEM	PART NUMBER	QTY	BODY	MODEL	DESCRIPTION
1					DECAL, Body Side
	J576 5424-5	1			Blues
	J576 5422-3	1			Oranges
	J576 5420-1	1			Yellows
2					DECAL, Cargo Box Side
	J576 5442-3	1			Blues
	J576 5440-1	1			Oranges
	J576 5438-9	1			Yellows
3					DECAL, Jeep, Rear
	J576 6786	1			Blues
	J576 6785	1			Oranges
	J576 6784	1			Yellows
4					DECAL, Hood
	J576 5407	1			Blues
	J576 5406	1			Oranges
	J576 5405	1			Yellows
5					DECAL, Hood, Renegade
	J576 5412-3	1			Blues
	J576 5410-1	1			Oranges
	J576 5408-9	1			Yellows
6					APPLIQUE, Door
	J576 4570-1	1			Black
	J576 5504-5	1			Honey
	J576 4568-9	1			White
7					DECAL, Jeep
	J546 1682	1			Black
	J576 6777	1			Copper
	J576 6779	1			Dark Blue
	J576 6778	1			Dark Orange
	J576 6780	1			White
8					DECAL, Cowl, Diesel
	J576 0284	2			Black
	J575 7491	2			Silver
9	J576 5270	2			PROTECTOR, Scuff, Clear

MODEL CODES

16=Cherokee 2 Dr.(1981-83)	78=Cherokee 4WD-4 Dr.(1984-86)	64=Comanche 2WD-6 Ft. Box(1986)	25=J-10 Truck 7 Ft. Box(1981-84)
17=Cherokee 2 Dr.(1981-83)	85=CJ-5 (1981-83)	66=Comanche 2WD-7 Ft. Box(1986)	26=J10 Truck 8 Ft. Box(1981-86)
73=Cherokee 2WD-2 Dr.(1984-86)	86=CJ-6(1981)	63=Comanche 4WD-6 Ft. Box(1986)	27=J-20 Truck 8 Ft. Box(1981-86)
74=Cherokee 2WD-4 Dr.(1984-86)	87=CJ-7(1981-86)	65=Comanche 4WD-7 Ft. Box(1986)	15=Wagoneer 4 Dr.(1981-83)
18=Cherokee 4 Dr.(1981-83)	88=CJ-8, Scrambler(1981-86)	15=Grand Wagoneer 4 Dr.(1984-86)	75=Wagoneer 4WD-4 Dr.(1984-86)
77=Cherokee 4WD-2 Dr.(1984-86)			

BODY
CJ=CJ-5, CJ-6, CJ-7, CJ-8, Scrambler(1981-86)
MJ=Comanche Pickup(1986)

STYLES
SJ=Wagoneer(1981-83), Grand Wagoneer(1984-86), Cherokee(1981-83), J-10, J-20(1981-86)
XJ=Wagoneer(1984-86), Cherokee(1984-86)

AR = Use as Required - = Non Illustrated Part P.A.R. = Paint as Required

« RETURN TO GROUP INDEX

DECALS, EXTERIOR RENEGADE, EXPORT, WITHOUT WORLD CAB, 1981-82 CJ-8
Figure 23-2100

81J68 2100

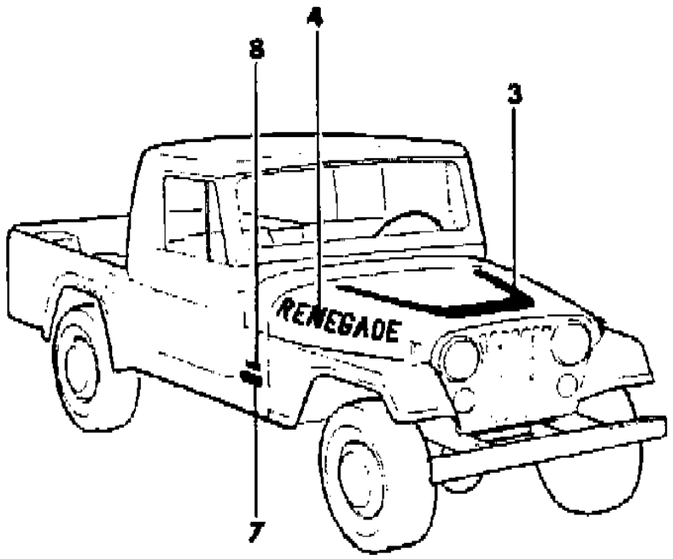

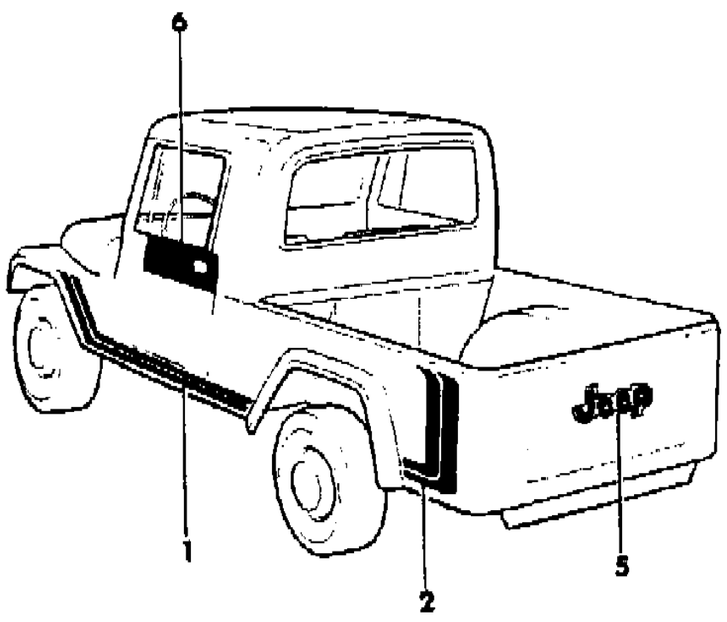

ITEM	PART NUMBER	QTY	BODY	MODEL	DESCRIPTION
1					DECAL, Body Side
	J575 7774-5	1			Blues
	J575 7772-3	1			Oranges
	J575 7776-7	1			Yellows
2					DECAL, Cargo Box Side
	J575 7780-1	1			Blues
	J575 7778-9	1			Oranges
	J575 7782-3	1			Yellows
3					DECAL, Hood
	J575 7791	1			Blues
	J575 7790	1			Oranges
	J575 7792	1			Yellows
4					DECAL, Hood, Renegade
	J575 7786-7	1			Blues
	J575 7784-5	1			Oranges
	J575 7788-9	1			Yellows
5					DECAL, Jeep, Rear
	J576 1893	1			Blues
	J576 1892	1			Oranges
	J576 1894	1			Yellows
6					APPLIQUE, Door
	J575 7648-9	1			Black
	J576 0250-1	1			Nutmeg
	J576 0756-7	1			White
7					DECAL, Jeep
	J546 1682	2			Black
	J546 1681	2			White
8					DECAL, Cowl, Diesel
	J575 0284	2			Black
	J575 7491	2			Silver

MODEL CODES

16=Cherokee 2 Dr.(1981-83)	78=Cherokee 4WD-4 Dr.(1984-86)	64=Comanche 2WD-6 Ft. Box(1986)	25=J-10 Truck 7 Ft. Box(1981-84)
17=Cherokee 2 Dr.(1981-83)	85=CJ-5 (1981-83)	66=Comanche 2WD-7 Ft. Box(1986)	26=J10 Truck 8 Ft. Box(1981-86)
73=Cherokee 2WD-2 Dr.(1984-86)	86=CJ-6(1981)	63=Comanche 4WD-6 Ft. Box(1986)	27=J-20 Truck 8 Ft. Box(1981-86)
74=Cherokee 2WD-4 Dr.(1984-86)	87=CJ-7(1981-86)	65=Comanche 4WD-7 Ft. Box(1986)	15=Wagoneer 4 Dr.(1981-83)
18=Cherokee 4 Dr.(1981-83)	88=CJ-8, Scrambler(1981-86)	15=Grand Wagoneer 4 Dr.(1984-86)	75=Wagoneer 4WD-4 Dr.(1984-86)
77=Cherokee 4WD-2 Dr.(1984-86)			

BODY
CJ=CJ-5, CJ-6, CJ-7, CJ-8, Scrambler(1981-86)
MJ=Comanche Pickup(1986)

STYLES
SJ=Wagoneer(1981-83), Grand Wagoneer(1984-86), Cherokee(1981-83), J-10, J-20(1981-86)
XJ=Wagoneer(1984-86), Cherokee(1984-86)

AR = Use as Required - = Non Illustrated Part P.A.R. = Paint as Required

« RETURN TO GROUP INDEX

DECALS, EXTERIOR RENEGADE, EXPORT, WITHOUT WORLD CAB, 1983-84 CJ-8
Figure 23-2200

81J68 2200

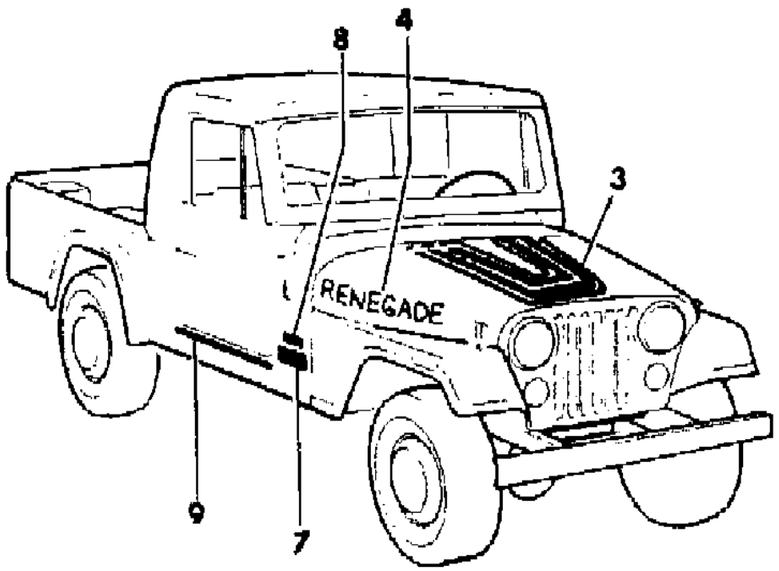

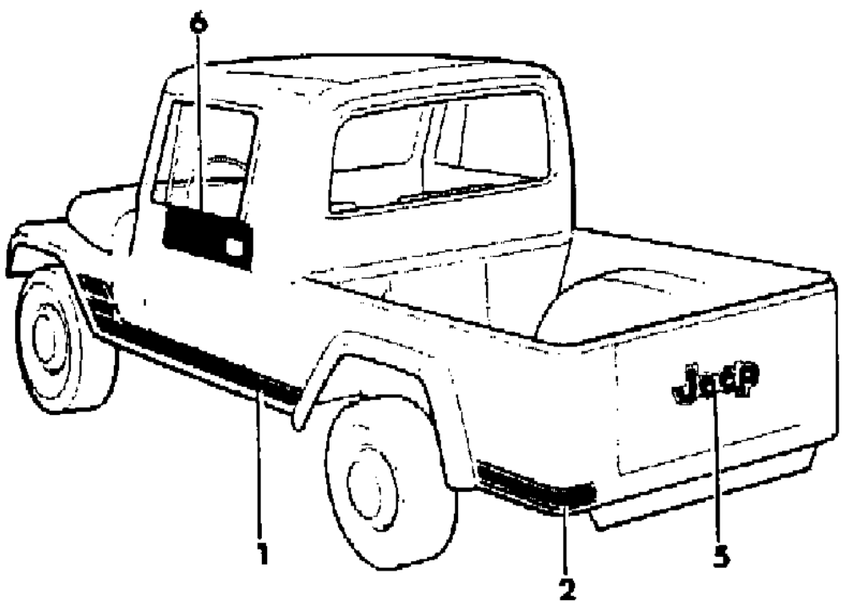

ITEM	PART NUMBER	QTY	BODY	MODEL	DESCRIPTION
1					DECAL, Body Side
	J576 3036-7	1			Blues (a)
	J576 3032-3	1			Reds (a)
	J576 4364-5	1			Blues (b)
	J576 4360-1	1			Oranges (b)
	J576 3040-1	1			Yellows
2					DECAL, Cargo Box Side
	J576 3038-9	1			Blues (a)
	J576 3034-5	1			Reds (a)
	J576 4366-7	1			Blues (b)
	J576 4362-3	1			Oranges (b)
	J576 3042-3	1			Yellows
3					DECAL, Hood
	J576 3006	1			Blues (a)
	J576 3005	1			Reds (a)
	J576 4339	1			Blues (b)
	J576 4338	1			Oranges (b)
	J576 3007	1			Yellows
4					DECAL, Hood, Renegade
	J576 3010-1	1			Blues (a)
	J576 3008-9	1			Reds (a)
	J576 4342-3	1			Blues (b)
	J576 4340-1	1			Oranges (b)
	J576 3012-3	1			Yellows
5					DECAL, Jeep, Rear
	J576 1893	1			Blues (a)
	J576 1892	1			Reds (a)
	J576 4369	1			Blues (b)
	J576 4368	1			Oranges (b)
	J576 1894	1			Yellows
6					APPLIQUE, Door
					1983
	J576 0250-1	1			Nutmeg
	J576 0756-7	1			White
					1983-84
	J575 7648-9	1			Black (c)
					1984
	J576 4570-1	1			Black (d)
	J576 4572-3	1			Nutmeg

MODEL CODES

16=Cherokee 2 Dr.(1981-83)
17=Cherokee 2 Dr.(1981-83)
73=Cherokee 2WD-2 Dr.(1984-86)
74=Cherokee 2WD-4 Dr.(1984-86)
18=Cherokee 4 Dr.(1981-83)
77=Cherokee 4WD-2 Dr.(1984-86)
78=Cherokee 4WD-4 Dr.(1984-86)
85=CJ-5 (1981-83)
86=CJ-6(1981)
87=CJ-7(1981-86)
88=CJ-8, Scrambler(1981-86)
64=Comanche 2WD-6 Ft. Box(1986)
66=Comanche 2WD-7 Ft. Box(1986)
63=Comanche 4WD-6 Ft. Box(1986)
65=Comanche 4WD-7 Ft. Box(1986)
15=Grand Wagoneer 4 Dr.(1984-86)
25=J-10 Truck 7 Ft. Box(1981-84)
26=J10 Truck 8 Ft. Box(1981-86)
27=J-20 Truck 8 Ft. Box(1981-86)
15=Wagoneer 4 Dr.(1981-83)
75=Wagoneer 4WD-4 Dr.(1984-86)

BODY
CJ=CJ-5, CJ-6, CJ-7, CJ-8, Scrambler(1981-86)
MJ=Comanche Pickup(1986)

STYLES
SJ=Wagoneer(1981-83), Grand Wagoneer(1984-86), Cherokee(1981-83), J-10, J-20(1981-86)
XJ=Wagoneer(1984-86), Cherokee(1984-86)

AR = Use as Required - = Non Illustrated Part P.A.R. = Paint as Required

DECALS, EXTERIOR RENEGADE, EXPORT, WITHOUT WORLD CAB, 1983-84 CJ-8
Figure 23-2200

81J68 2200

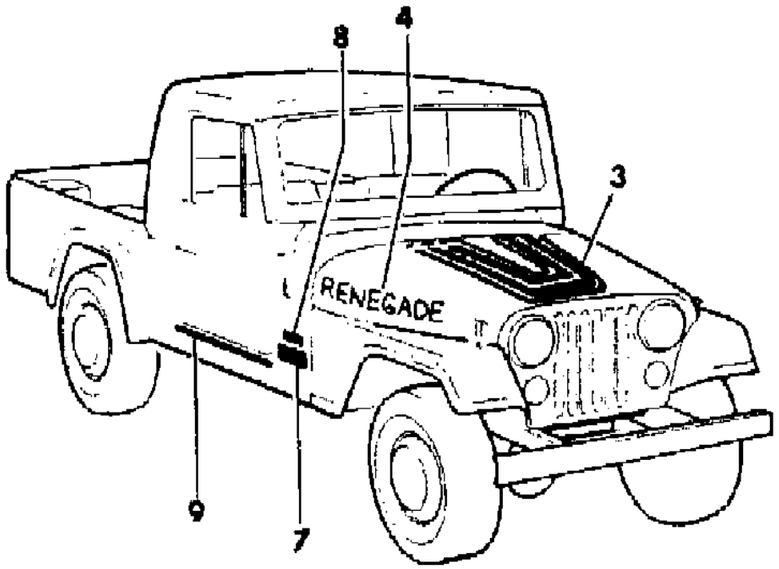

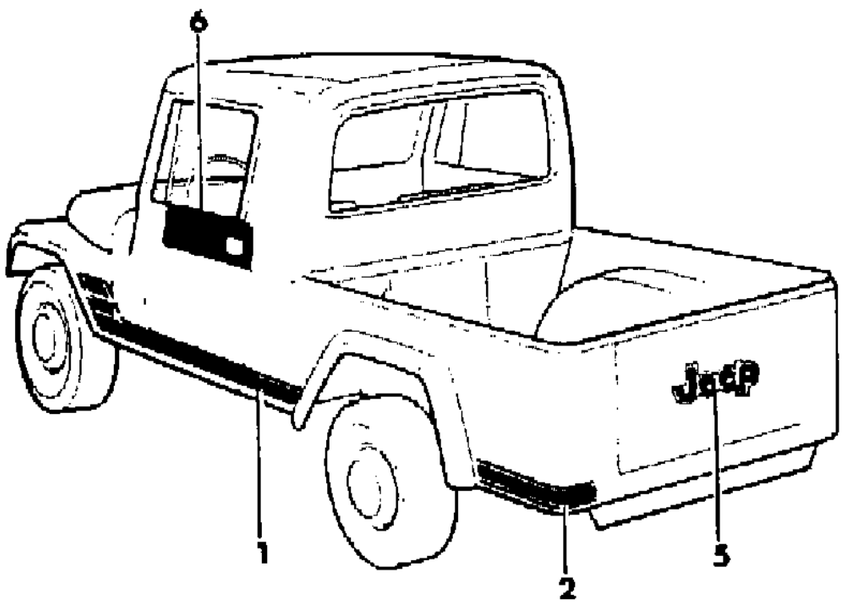

ITEM	PART NUMBER	QTY	BODY	MODEL	DESCRIPTION
	J576 4568-9	1			White
7					DECAL, Jeep
	J546 1682	2			Black
	J546 1681	2			White
8					DECAL, Cowl, Diesel
	J575 0284	2			Black
	J575 7491	2			Silver
9	J576 5270	2			PROTECTOR, Scuff, Clear

(a) Used on 1983 Vehicles until 5-1-83 (B) Trans Pt# 8983001671-After #50100909; 8953001670-After #50100901; 8353002265-After #50100423: 8953002264-After #50100934;8953001190-After#50102878

(b) Used on 1983 vehicles after 5-1-83 (B) Trans Pt# 8983001671-After #50100909; 8953001670-After #50100901; 8353002265-After #50100423: 8953002264-After #50100934;8953001190-After#50102878

(c) Used on 1984 vehicles until 11-11-83 (B) Trans Pt# 8983001671-After #50100909; 8953001670-After #50100901; 8353002265-After #50100423: 8953002264-After #50100934;8953001190-After#50102878

(d) Used on 1984 Vehicles starting on 11-11-83, VIN NO. 039651 (B) Trans Pt# 8983001671-After #50100909; 8953001670-After #50100901; 8353002265-After #50100423: 8953002264-After #50100934;8953001190-After#50102878

MODEL CODES

16=Cherokee 2 Dr.(1981-83)
17=Cherokee 2 Dr.(1981-83)
73=Cherokee 2WD-2 Dr.(1984-86)
74=Cherokee 2WD-4 Dr.(1984-86)
18=Cherokee 4 Dr.(1981-83)
77=Cherokee 4WD-2 Dr.(1984-86)
78=Cherokee 4WD-4 Dr.(1984-86)
85=CJ-5 (1981-83)
86=CJ-6(1981)
87=CJ-7(1981-86)
88=CJ-8, Scrambler(1981-86)
64=Comanche 2WD-6 Ft. Box(1986)
66=Comanche 2WD-7 Ft. Box(1986)
63=Comanche 4WD-6 Ft. Box(1986)
65=Comanche 4WD-7 Ft. Box(1986)
15=Grand Wagoneer 4 Dr.(1984-86)
25=J-10 Truck 7 Ft. Box(1981-84)
26=J10 Truck 8 Ft. Box(1981-86)
27=J-20 Truck 8 Ft. Box(1981-86)
15=Wagoneer 4 Dr.(1981-83)
75=Wagoneer 4WD-4 Dr.(1984-86)

BODY
CJ=CJ-5, CJ-6, CJ-7, CJ-8, Scrambler(1981-86)
MJ=Comanche Pickup(1986)

STYLES
SJ=Wagoneer(1981-83), Grand Wagoneer(1984-86), Cherokee(1981-83), J-10, J-20(1981-86)
XJ=Wagoneer(1984-86), Cherokee(1984-86)

AR = Use as Required - = Non Illustrated Part P.A.R. = Paint as Required

DECALS, EXTERIOR RENEGADE, EXPORT WITH WORLD CAB CJ-8
Figure 23-2300

81J68 2300

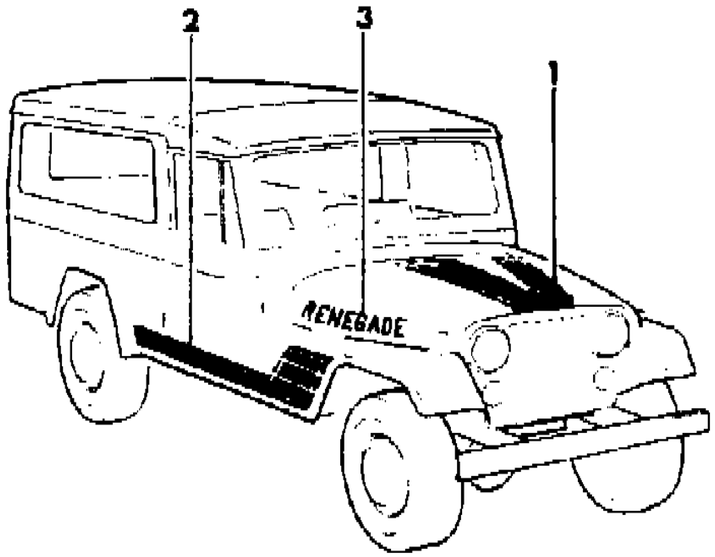

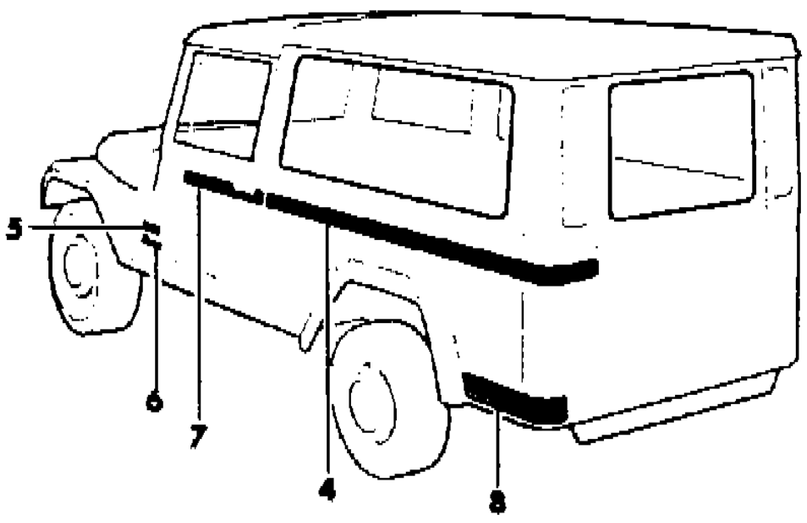

ITEM	PART NUMBER	QTY	BODY	MODEL	DESCRIPTION
1					DECAL, Hood
	J576 3006	1			Blues (b)
	J576 3005	1			Reds (b)
	J576 4339	1			Blues (c)
	J576 4338	1			Oranges (c)
	J576 3007	1			Yellows
2					DECAL, Body Side
	J576 3036-7	1			Blues (b)
	J576 3032-3	1			Reds (b)
	J576 4364-5	1			Blues (c)
	J576 4360-1	1			Oranges (c)
	J576 3040-1	1			Yellows
3					DECAL, Hood, Renegade
	J576 3010-1	1			Blues (b)
	J576 3008-9	1			Reds (b)
	J576 4342-3	1			Blues (c)
	J576 4340-1	1			Oranges (c)
	J576 3012-3	1			Yellows
4					DECAL, Rear Quarter
					Right
	J805 3282	1			Dark Blue (a)
	J805 3284	1			Dark Orange (a)
	J805 3108	1			Copper
	J805 3110	1			Dark Blue
	J805 3112	1			Dark Red
					Left
	J805 3281	1			Dark Blue (a)
	J805 3283	1			Dark Orange (a)
	J805 3107	1			Copper
	J805 3109	1			Dark Blue
	J805 3111	1			Dark Red
5					DECAL, Diesel
	J575 0284	1			Black
	J575 7491	1			Silver
6					DECAL, Jeep
	J546 1682	2			Black
	J546 1681	2			White
7					DECAL, Door
					Right

MODEL CODES

16=Cherokee 2 Dr.(1981-83)	78=Cherokee 4WD-4 Dr.(1984-86)	64=Comanche 2WD-6 Ft. Box(1986)	25=J-10 Truck 7 Ft. Box(1981-84)
17=Cherokee 2 Dr.(1981-83)	85=CJ-5 (1981-83)	66=Comanche 2WD-7 Ft. Box(1986)	26=J10 Truck 8 Ft. Box(1981-86)
73=Cherokee 2WD-2 Dr.(1984-86)	86=CJ-6(1981)	63=Comanche 4WD-6 Ft. Box(1986)	27=J-20 Truck 8 Ft. Box(1981-86)
74=Cherokee 2WD-4 Dr.(1984-86)	87=CJ-7(1981-86)	65=Comanche 4WD-7 Ft. Box(1986)	15=Wagoneer 4 Dr.(1981-83)
18=Cherokee 4 Dr.(1981-83)	88=CJ-8, Scrambler(1981-86)	15=Grand Wagoneer 4 Dr.(1984-86)	75=Wagoneer 4WD-4 Dr.(1984-86)
77=Cherokee 4WD-2 Dr.(1984-86)			

BODY
CJ=CJ-5, CJ-6, CJ-7, CJ-8, Scrambler(1981-86)
MJ=Comanche Pickup(1986)

STYLES
SJ=Wagoneer(1981-83), Grand Wagoneer(1984-86), Cherokee(1981-83), J-10, J-20(1981-86)
XJ=Wagoneer(1984-86), Cherokee(1984-86)

AR = Use as Required - = Non Illustrated Part P.A.R. = Paint as Required

DECALS, EXTERIOR RENEGADE, EXPORT WITH WORLD CAB CJ-8
Figure 23-2300

81J68 2300

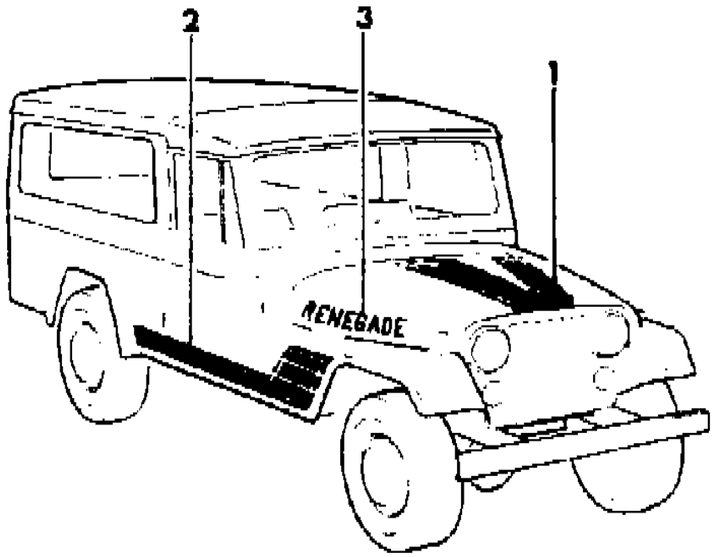

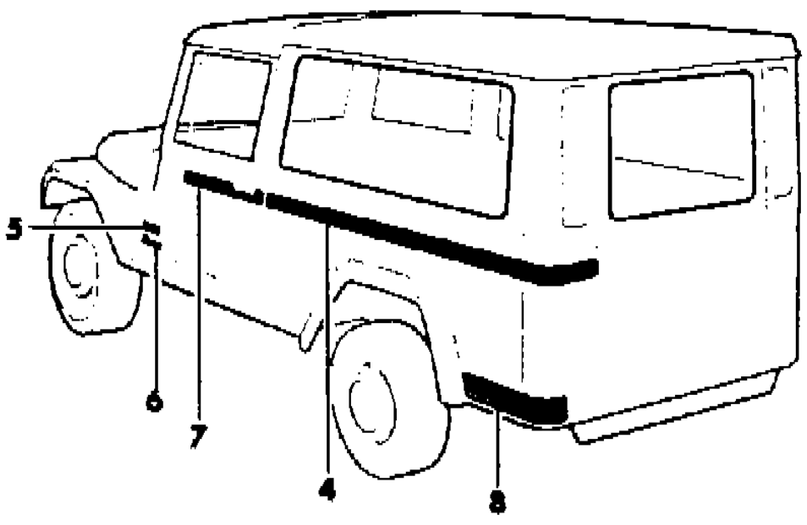

ITEM	PART NUMBER	QTY	BODY	MODEL	DESCRIPTION
	J805 3102	1			Copper
	J805 3278	1			Dark Blue (a)
	J805 3104	1			Dark Blue
	J805 3280	1			Dark Orange (a)
	J805 3106	1			Dark Red
					Left
	J805 3101	1			Copper
	J805 3277	1			Dark Blue (a)
	J805 3103	1			Dark Blue
	J805 3279	1			Dark Orange (a)
	J805 3105	1			Dark Red
8					DECAL, Rear Quarter
	J576 3038-9	1			Blues (b)
	J576 4366-7	1			Blues (c)
	J576 4362-3	1			Oranges (c)
	J576 3034-5	1			Reds (b)
	J576 3042-3	1			Yellows

(a) Color tones in these decals match Color Tones of the lower Renegade body decals if so equipped. If not equipped with Renegade decals, color tones (B) Trans Pt# 8983001671-After #50100909; 8953001670-After #50100901; 8353002265-After in decals were changed approximately near the end of 1893 model which could require a visual match (B) Trans Pt# 8983001671-After #50100909; 8953001670-After #50100901; 8353002265-After #50100423: 8953002264-After #50100934;8953001190-After#

(b) These decals are used on 1983 vehicles until approximately 5-1-83 (c) These Decals are used on 1983 vehicles after approximately 5-1-83

MODEL CODES

16=Cherokee 2 Dr.(1981-83)
17=Cherokee 2 Dr.(1981-83)
73=Cherokee 2WD-2 Dr.(1984-86)
74=Cherokee 2WD-4 Dr.(1984-86)
18=Cherokee 4 Dr.(1981-83)
77=Cherokee 4WD-2 Dr.(1984-86)
78=Cherokee 4WD-4 Dr.(1984-86)
85=CJ-5 (1981-83)
86=CJ-6(1981)
87=CJ-7(1981-86)
88=CJ-8, Scrambler(1981-86)
64=Comanche 2WD-6 Ft. Box(1986)
66=Comanche 2WD-7 Ft. Box(1986)
63=Comanche 4WD-6 Ft. Box(1986)
65=Comanche 4WD-7 Ft. Box(1986)
15=Grand Wagoneer 4 Dr.(1984-86)
25=J-10 Truck 7 Ft. Box(1981-84)
26=J10 Truck 8 Ft. Box(1981-86)
27=J-20 Truck 8 Ft. Box(1981-86)
15=Wagoneer 4 Dr.(1981-83)
75=Wagoneer 4WD-4 Dr.(1984-86)

BODY
CJ=CJ-5, CJ-6, CJ-7, CJ-8, Scrambler(1981-86)
MJ=Comanche Pickup(1986)

STYLES
SJ=Wagoneer(1981-83), Grand Wagoneer(1984-86), Cherokee(1981-83), J-10, J-20(1981-86)
XJ=Wagoneer(1984-86), Cherokee(1984-86)

AR = Use as Required - = Non Illustrated Part P.A.R. = Paint as Required

DECALS, EXTERIOR LLANERO, VENEZUELA WITH WORLD CAB CJ-8
Figure 23-2400

81J68 2400

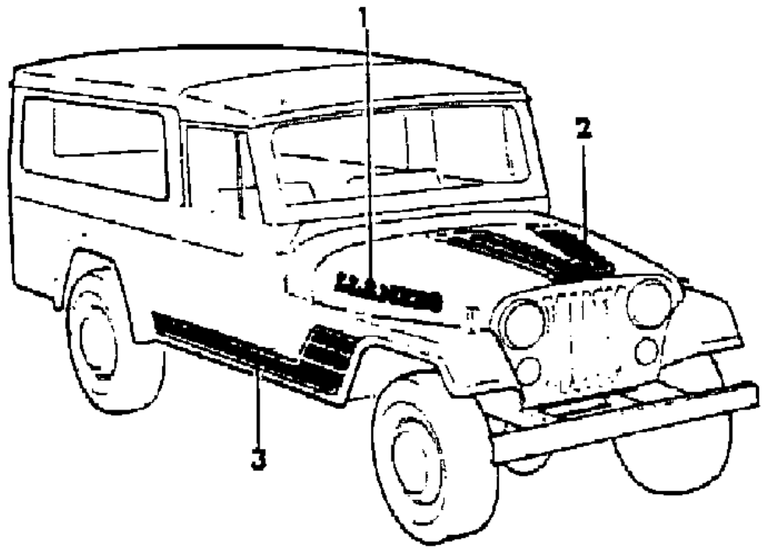

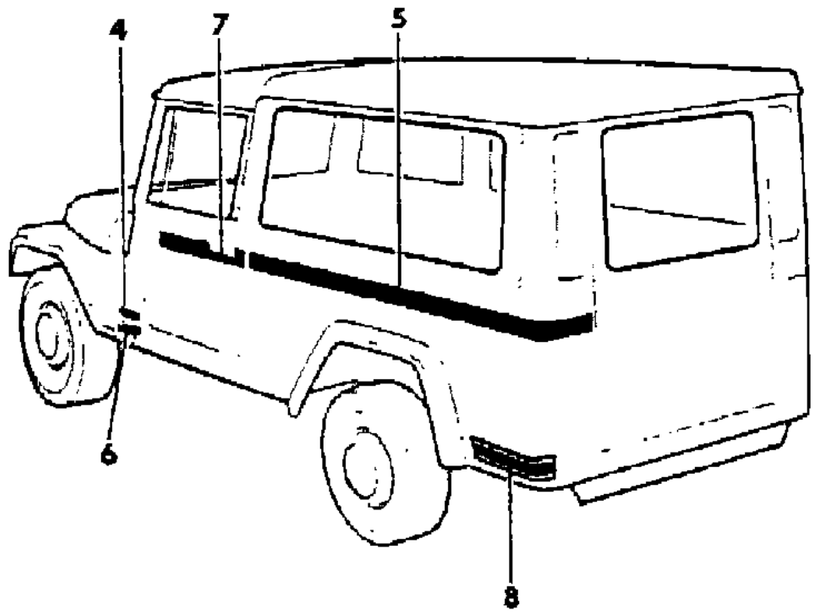

ITEM	PART NUMBER	QTY	BODY	MODEL	DESCRIPTION
1					DECAL, Hood, Llanero
					Right
	J805 3373	1			Blues
	J805 3371	1			Oranges
	J805 3369	1			Yellows
					Left
	J805 3374	1			Blues
	J805 3372	1			Oranges
	J805 3370	1			Yellows
2					DECAL, Hood
	J576 4339	1			Blues
	J576 4338	1			Oranges
	J576 3007	1			Yellows
3					DECAL, Body, Side
	J576 4364-5	1			Blues
	J576 4360-1	1			Oranges
	J576 3040-1	1			Yellows
4					DECAL, Diesel
	J575 0284	1			Black
	J575 7491	1			Silver
5					DECAL, Rear Quarter
					Right
	J805 3108	1			Copper
	J805 3282	1			Dark Blue
	J805 3284	1			Dark Orange
					Left
	J805 3107	1			Copper
	J805 3281	1			Dark Blue
	J805 3283	1			Dark Orange
6					DECAL, Jeep
	J546 1682	2			Black
	J546 1681	2			White
7					DECAL, Door
					Right
	J805 3102	1			Copper
	J805 3278	1			Dark Blue
	J805 3280	1			Dark Orange
					Left
	J805 3101	1			Copper

MODEL CODES

16=Cherokee 2 Dr.(1981-83)	78=Cherokee 4WD-4 Dr.(1984-86)	64=Comanche 2WD-6 Ft. Box(1986)	25=J-10 Truck 7 Ft. Box(1981-84)
17=Cherokee 2 Dr.(1981-83)	85=CJ-5 (1981-83)	66=Comanche 2WD-7 Ft. Box(1986)	26=J10 Truck 8 Ft. Box(1981-86)
73=Cherokee 2WD-2 Dr.(1984-86)	86=CJ-6(1981)	63=Comanche 4WD-6 Ft. Box(1986)	27=J-20 Truck 8 Ft. Box(1981-86)
74=Cherokee 2WD-4 Dr.(1984-86)	87=CJ-7(1981-86)	65=Comanche 4WD-7 Ft. Box(1986)	15=Wagoneer 4 Dr.(1981-83)
18=Cherokee 4 Dr.(1981-83)	88=CJ-8, Scrambler(1981-86)	15=Grand Wagoneer 4 Dr.(1984-86)	75=Wagoneer 4WD-4 Dr.(1984-86)
77=Cherokee 4WD-2 Dr.(1984-86)			

BODY
CJ=CJ-5, CJ-6, CJ-7, CJ-8, Scrambler(1981-86)
MJ=Comanche Pickup(1986)

STYLES
SJ=Wagoneer(1981-83), Grand Wagoneer(1984-86), Cherokee(1981-83), J-10, J-20(1981-86)
XJ=Wagoneer(1984-86), Cherokee(1984-86)

AR = Use as Required - = Non Illustrated Part P.A.R. = Paint as Required

DECALS, EXTERIOR LLANERO, VENEZUELA WITH WORLD CAB CJ-8
Figure 23-2400

81J68 2400

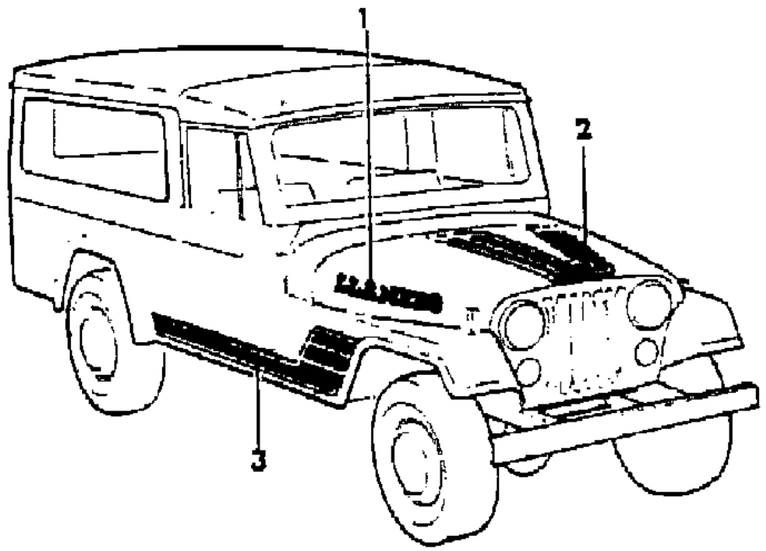

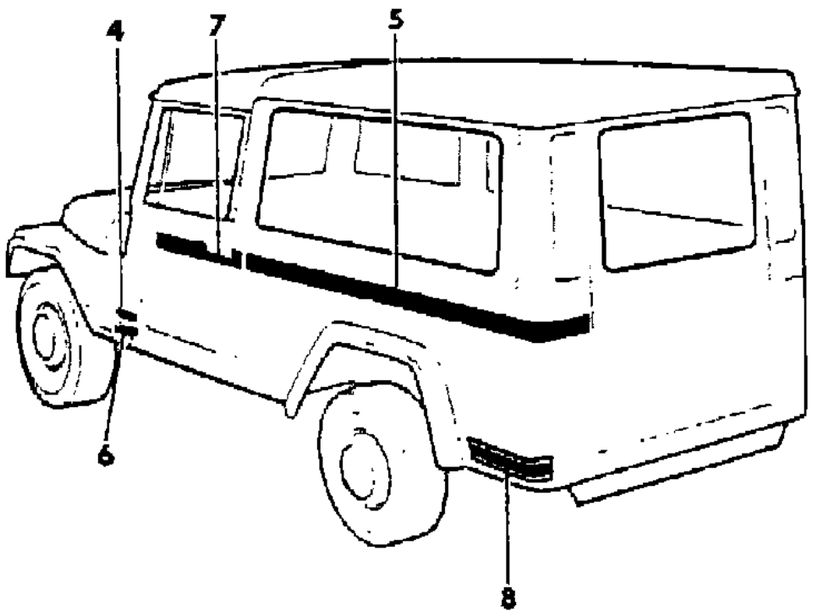

ITEM	PART NUMBER	QTY	BODY	MODEL	DESCRIPTION
	J805 3277	1			Dark Blue
	J805 3279	1			Dark Orange
8					DECAL, Rear Quarter, Lower
	J576 4366-7	1			Blues
	J576 4362-3	1			Oranges
	J576 3042-3	1			Yellows

MODEL CODES

16=Cherokee 2 Dr.(1981-83)
17=Cherokee 2 Dr.(1981-83)
73=Cherokee 2WD-2 Dr.(1984-86)
74=Cherokee 2WD-4 Dr.(1984-86)
18=Cherokee 4 Dr.(1981-83)
77=Cherokee 4WD-2 Dr.(1984-86)
78=Cherokee 4WD-4 Dr.(1984-86)
85=CJ-5 (1981-83)
86=CJ-6(1981)
87=CJ-7(1981-86)
88=CJ-8, Scrambler(1981-86)
64=Comanche 2WD-6 Ft. Box(1986)
66=Comanche 2WD-7 Ft. Box(1986)
63=Comanche 4WD-6 Ft. Box(1986)
65=Comanche 4WD-7 Ft. Box(1986)
15=Grand Wagoneer 4 Dr.(1984-86)
25=J-10 Truck 7 Ft. Box(1981-84)
26=J10 Truck 8 Ft. Box(1981-86)
27=J-20 Truck 8 Ft. Box(1981-86)
15=Wagoneer 4 Dr.(1981-83)
75=Wagoneer 4WD-4 Dr.(1984-86)

BODY
CJ=CJ-5, CJ-6, CJ-7, CJ-8, Scrambler(1981-86)
MJ=Comanche Pickup(1986)

STYLES
SJ=Wagoneer(1981-83), Grand Wagoneer(1984-86), Cherokee(1981-83), J-10, J-20(1981-86)
XJ=Wagoneer(1984-86), Cherokee(1984-86)

AR = Use as Required - = Non Illustrated Part P.A.R. = Paint as Required

« RETURN TO GROUP INDEX

DECALS, EXTERIOR SL SPORT, 1981-84 SCRAMBLER
Figure 23-2500

81J68 2500

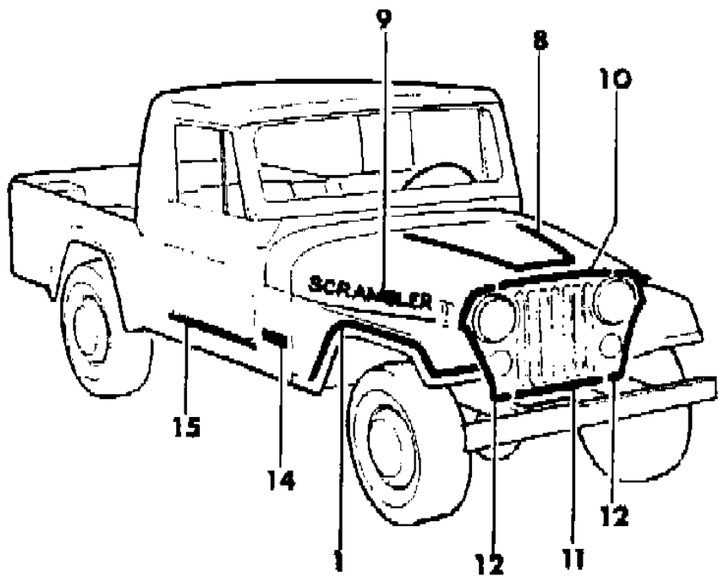

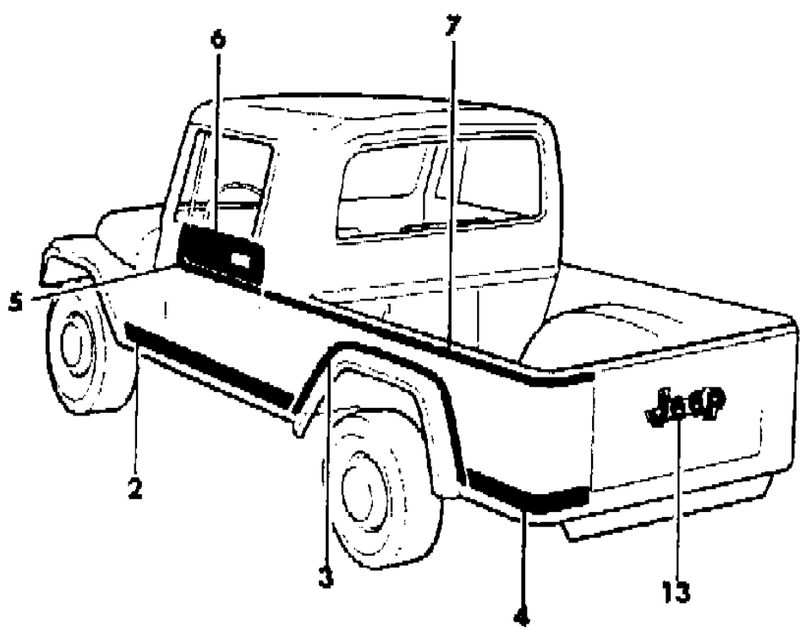

ITEM	PART NUMBER	QTY	BODY	MODEL	DESCRIPTION
1					DECAL, Fender
					Right
	J576 0432	1			Nutmeg
	J575 0690	1			Silver
					Left
	J576 0433	1			Nutmeg
	J575 0689	1			Silver
2					DECAL, Body Side
	J576 0434-5	1			Nutmeg
	J575 7892-3	1			Silver
3					DECAL, Wheel Opening
	J576 0438-9	1			Nutmeg
	J575 7896-7	1			Silver
4					DECAL, Cargo Box Side
	J576 0436-7	1			Nutmeg
	J575 7900-1	1			Silver
5					DECAL, Door
					Right
	J576 0448	1			Nutmeg
	J575 0708	1			Silver
					Left
	J576 0449	1			Nutmeg
	J575 0707	1			Silver
6					APPLIQUE, Door
					1981-83
	J576 0250-1	1			Nutmeg
	J576 0756-7	1			White
					1981-84
	J575 7648-9	1			Black (a)
					1984
	J576 4570-1	1			Black (b)
	J576 4572-3	1			Nutmeg
	J576 4568-9	1			White
7					DECAL, Cargo Box Side
	J576 0450-1	1			Nutmeg
	J575 7904-5	1			Silver
8					DECAL, Hood
	J576 0440	1			Nutmeg
	J575 0705	1			Silver

MODEL CODES

16=Cherokee 2 Dr.(1981-83)	78=Cherokee 4WD-4 Dr.(1984-86)	64=Comanche 2WD-6 Ft. Box(1986)	25=J-10 Truck 7 Ft. Box(1981-84)
17=Cherokee 2 Dr.(1981-83)	85=CJ-5 (1981-83)	66=Comanche 2WD-7 Ft. Box(1986)	26=J10 Truck 8 Ft. Box(1981-86)
73=Cherokee 2WD-2 Dr.(1984-86)	86=CJ-6(1981)	63=Comanche 4WD-6 Ft. Box(1986)	27=J-20 Truck 8 Ft. Box(1981-86)
74=Cherokee 2WD-4 Dr.(1984-86)	87=CJ-7(1981-86)	65=Comanche 4WD-7 Ft. Box(1986)	15=Wagoneer 4 Dr.(1981-83)
18=Cherokee 4 Dr.(1981-83)	88=CJ-8, Scrambler(1981-86)	15=Grand Wagoneer 4 Dr.(1984-86)	75=Wagoneer 4WD-4 Dr.(1984-86)
77=Cherokee 4WD-2 Dr.(1984-86)			

BODY
CJ=CJ-5, CJ-6, CJ-7, CJ-8, Scrambler(1981-86)
MJ=Comanche Pickup(1986)

STYLES
SJ=Wagoneer(1981-83), Grand Wagoneer(1984-86), Cherokee(1981-83), J-10, J-20(1981-86)
XJ=Wagoneer(1984-86), Cherokee(1984-86)

AR = Use as Required - = Non Illustrated Part P.A.R. = Paint as Required

DECALS, EXTERIOR SL SPORT, 1981-84 SCRAMBLER
Figure 23-2500

81J68 2500

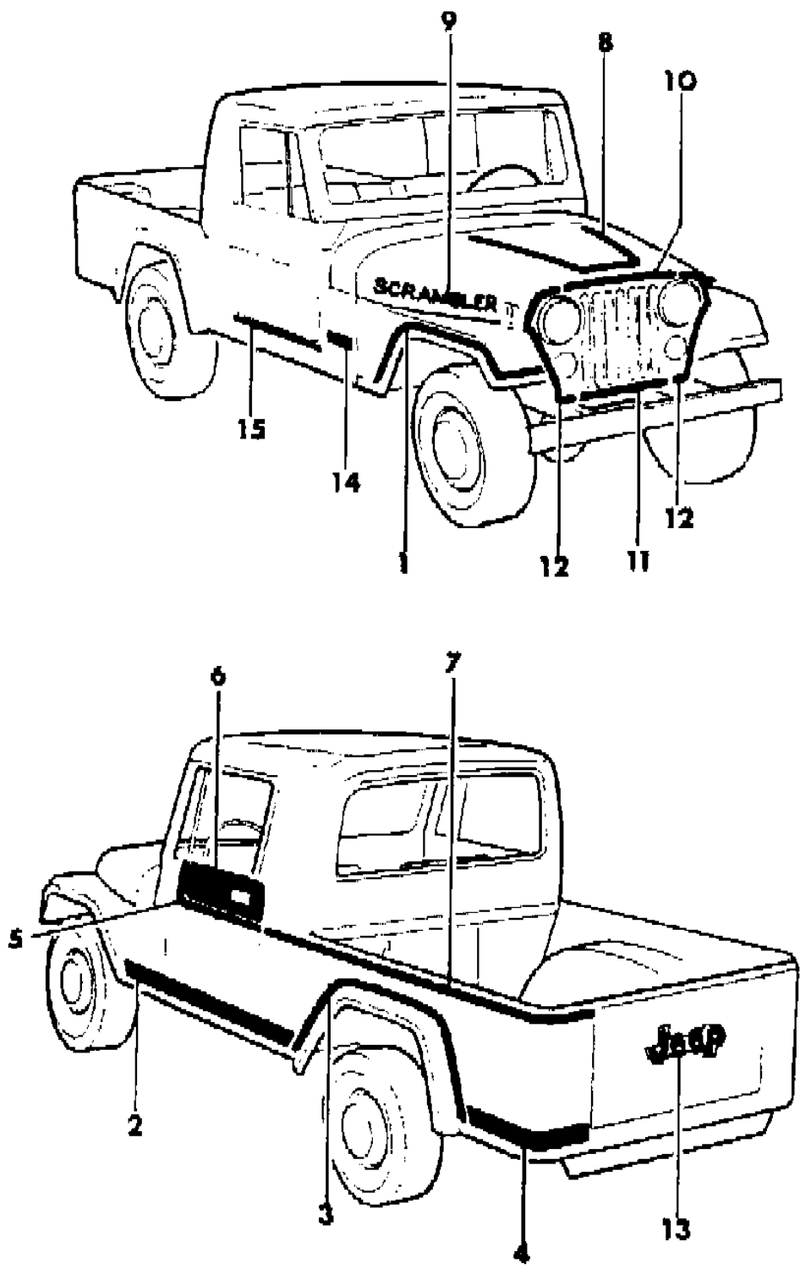

ITEM	PART NUMBER	QTY	BODY	MODEL	DESCRIPTION
9					DECAL, Hood, Scrambler
	J576 0510-1	1			Nutmeg
	J576 0508-9	1			Silver
10	J575 0719	1			DECAL, Grille, Upper, Black
11	J575 0722	1			DECAL, Grille, Lower, Black
12	J575 0720-1	1			DECAL, Grille, Side, Black
13					DECAL, Jeep, Rear
	J576 1891	1			Burnt Orange/Nutmeg
	J576 1890	1			Silver
14					DECAL, Jeep
	J576 1024	2			Burnt Orange
	J575 0564	2			Silver
15	J576 5270	2			PROTECTOR, Scuff, Clear

(a) Used on 1984 Vehicles until 11/11/83, VIN No. 039650 (c) These Decals are used on 1983 vehicles after approximately 5-1-83
(b) Used on 1984 vehicles beginning 11-11-83, VIN No. 039651 (c) These Decals are used on 1983 vehicles after approximately 5-1-83

MODEL CODES

16=Cherokee 2 Dr.(1981-83)	78=Cherokee 4WD-4 Dr.(1984-86)	64=Comanche 2WD-6 Ft. Box(1986)	25=J-10 Truck 7 Ft. Box(1981-84)
17=Cherokee 2 Dr.(1981-83)	85=CJ-5 (1981-83)	66=Comanche 2WD-7 Ft. Box(1986)	26=J10 Truck 8 Ft. Box(1981-86)
73=Cherokee 2WD-2 Dr.(1984-86)	86=CJ-6(1981)	63=Comanche 4WD-6 Ft. Box(1986)	27=J-20 Truck 8 Ft. Box(1981-86)
74=Cherokee 2WD-4 Dr.(1984-86)	87=CJ-7(1981-86)	65=Comanche 4WD-7 Ft. Box(1986)	15=Wagoneer 4 Dr.(1981-83)
18=Cherokee 4 Dr.(1981-83)	88=CJ-8, Scrambler(1981-86)	15=Grand Wagoneer 4 Dr.(1984-86)	75=Wagoneer 4WD-4 Dr.(1984-86)
77=Cherokee 4WD-2 Dr.(1984-86)			

BODY
CJ=CJ-5, CJ-6, CJ-7, CJ-8, Scrambler(1981-86)
MJ=Comanche Pickup(1986)

STYLES
SJ=Wagoneer(1981-83), Grand Wagoneer(1984-86), Cherokee(1981-83), J-10, J-20(1981-86)
XJ=Wagoneer(1984-86), Cherokee(1984-86)

AR = Use as Required - = Non Illustrated Part P.A.R. = Paint as Required

DECALS, EXTERIOR LAREDO, 1985-86 SCRAMBLER
Figure 23-2600

81J68 2600

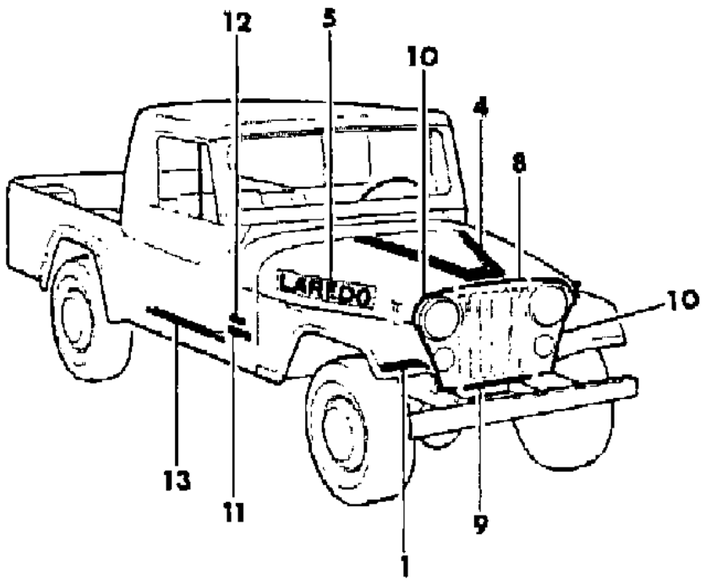

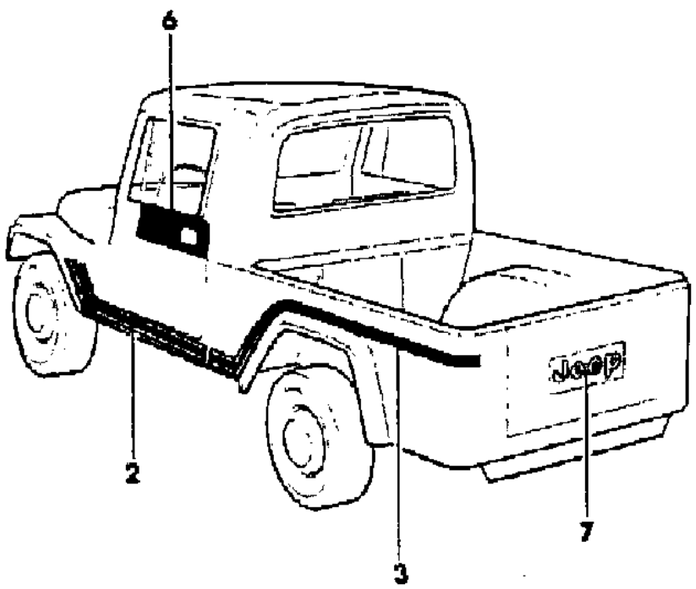

ITEM	PART NUMBER	QTY	BODY	MODEL	DESCRIPTION
1					DECAL, Fender
	J576 5452-3	1			Medium Brown/Light Brown
	J576 5450-1	1			Silver
2					DECAL, Body Side
	J576 5456-7	1			Medium Brown/Light Brown
	J576 5454-5	1			Silver
3					DECAL, Cargo Box Side
	J576 5464-5	1			Medium Brown/Light Brown
	J576 5462-3	1			Silver
4					DECAL, Hood
	J576 5479	1			Medium Brown/Light Brown
	J576 5478	1			Silver
5					DECAL, Hood, Laredo
	J576 5448-9	1			Medium Brown/Light Brown
	J576 5446-7	1			Silver
6					APPLIQUE, Door
	J576 4570-1	1			Black
	J576 5504-5	1			Honey
	J576 4568-9	1			White
7					DECAL, Jeep, Rear
	J576 6783	1			Medium Brown/Light Brown
	J576 6782	1			Silver
8	J575 0719	1			DECAL, Grille, Upper, Black
9	J575 0722	1			DECAL, Grille, Lower, Black
10	J575 0720-1	1			DECAL, Grille, Side, Black
11					DECAL, Jeep
	J576 5389	2			Medium Brown/Light Brown
	J576 5388	2			Silver
12					DECAL, Cowl, Diesel
	J575 0284	2			Black
	J575 7491	2			Silver
13	J576 5270	2			PROTECTOR, Scuff, Clear

MODEL CODES

16=Cherokee 2 Dr.(1981-83)
17=Cherokee 2 Dr.(1981-83)
73=Cherokee 2WD-2 Dr.(1984-86)
74=Cherokee 2WD-4 Dr.(1984-86)
18=Cherokee 4 Dr.(1981-83)
77=Cherokee 4WD-2 Dr.(1984-86)
78=Cherokee 4WD-4 Dr.(1984-86)
85=CJ-5 (1981-83)
86=CJ-6(1981)
87=CJ-7(1981-86)
88=CJ-8, Scrambler(1981-86)
64=Comanche 2WD-6 Ft. Box(1986)
66=Comanche 2WD-7 Ft. Box(1986)
63=Comanche 4WD-6 Ft. Box(1986)
65=Comanche 4WD-7 Ft. Box(1986)
15=Grand Wagoneer 4 Dr.(1984-86)
25=J-10 Truck 7 Ft. Box(1981-84)
26=J10 Truck 8 Ft. Box(1981-86)
27=J-20 Truck 8 Ft. Box(1981-86)
15=Wagoneer 4 Dr.(1981-83)
75=Wagoneer 4WD-4 Dr.(1984-86)

BODY
CJ=CJ-5, CJ-6, CJ-7, CJ-8, Scrambler(1981-86)
MJ=Comanche Pickup(1986)

STYLES
SJ=Wagoneer(1981-83), Grand Wagoneer(1984-86), Cherokee(1981-83), J-10, J-20(1981-86)
XJ=Wagoneer(1984-86), Cherokee(1984-86)

AR = Use as Required - = Non Illustrated Part P.A.R. = Paint as Required

« RETURN TO GROUP INDEX

DECALS, EXTERIOR LAREDO, EXPORT, WITHOUT WORLD CAB CJ-8
Figure 23-2700

81J68 2700

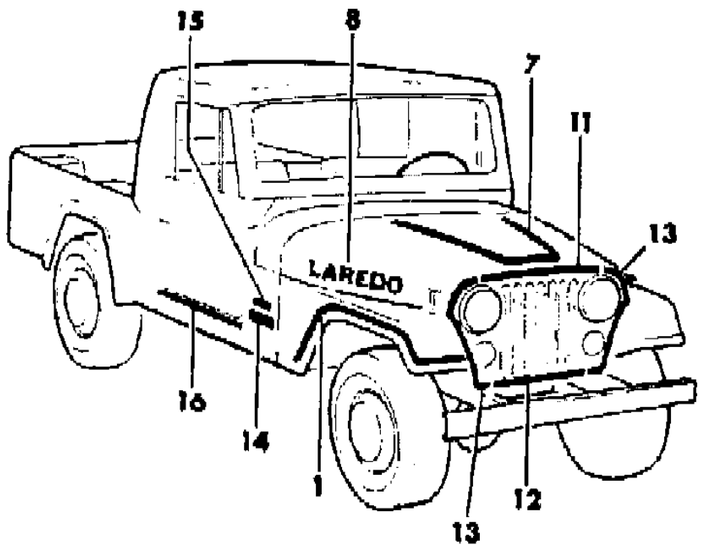

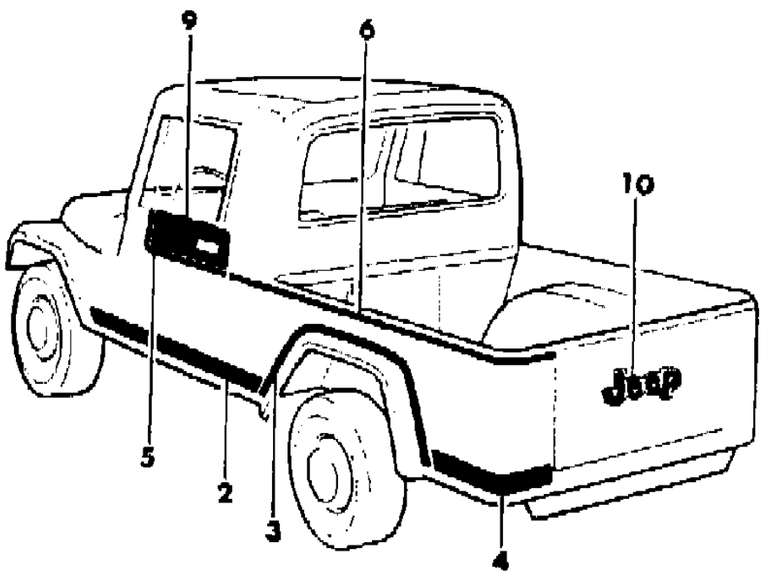

ITEM	PART NUMBER	QTY	BODY	MODEL	DESCRIPTION
1					DECAL, Fender
					Right
	J576 0432	1			Burnt Orange/Nutmeg
	J575 0690	1			Silver
					Left
	J576 0433	1			Burnt Orange/Nutmeg
	J575 0689	1			Silver
2					DECAL, Body Side
	J576 0434-5	1			Burnt Orange/Nutmeg
	J575 7892-3	1			Silver
3					DECAL, Wheel Opening
	J576 0438-9	1			Burnt Orange/Nutmeg
	J575 7896-7	1			Silver
4					DECAL, Cargo Box Side
	J576 0436-7	1			Burnt Orange/Nutmeg
	J575 7900-1	1			Silver
5					DECAL, Door
					Right
	J576 0448	1			Burnt Orange/Nutmeg
	J575 0708	1			Silver
					Left
	J576 0449	1			Burnt Orange/Nutmeg
	J575 0707	1			Silver
6					DECAL, Cargo Box Side
	J576 0450-1	1			Burnt Orange/Nutmeg
	J575 7904-5	1			Silver
7					DECAL, Hood
	J576 0440	1			Burnt Orange/Nutmeg
	J575 0705	1			Silver
8					DECAL, Hood, Laredo
	J576 1001	1			Burnt Orange/Nutmeg
	J575 4529	1			Silver
9					APPLIQUE, Door
					1981-83
	J576 0250-1	1			Nutmeg
					1981-84
	J575 7648-9	1			Black (a)
					1984
	J576 4570-1	1			Black (b)

MODEL CODES

16=Cherokee 2 Dr.(1981-83)	78=Cherokee 4WD-4 Dr.(1984-86)	64=Comanche 2WD-6 Ft. Box(1986)	25=J-10 Truck 7 Ft. Box(1981-84)
17=Cherokee 2 Dr.(1981-83)	85=CJ-5 (1981-83)	66=Comanche 2WD-7 Ft. Box(1986)	26=J10 Truck 8 Ft. Box(1981-86)
73=Cherokee 2WD-2 Dr.(1984-86)	86=CJ-6(1981)	63=Comanche 4WD-6 Ft. Box(1986)	27=J-20 Truck 8 Ft. Box(1981-86)
74=Cherokee 2WD-4 Dr.(1984-86)	87=CJ-7(1981-86)	65=Comanche 4WD-7 Ft. Box(1986)	15=Wagoneer 4 Dr.(1981-83)
18=Cherokee 4 Dr.(1981-83)	88=CJ-8, Scrambler(1981-86)	15=Grand Wagoneer 4 Dr.(1984-86)	75=Wagoneer 4WD-4 Dr.(1984-86)
77=Cherokee 4WD-2 Dr.(1984-86)			

BODY
CJ=CJ-5, CJ-6, CJ-7, CJ-8, Scrambler(1981-86)
MJ=Comanche Pickup(1986)

STYLES
SJ=Wagoneer(1981-83), Grand Wagoneer(1984-86), Cherokee(1981-83), J-10, J-20(1981-86)
XJ=Wagoneer(1984-86), Cherokee(1984-86)

AR = Use as Required - = Non Illustrated Part P.A.R. = Paint as Required

DECALS, EXTERIOR LAREDO, EXPORT, WITHOUT WORLD CAB CJ-8
Figure 23-2700

81J68 2700

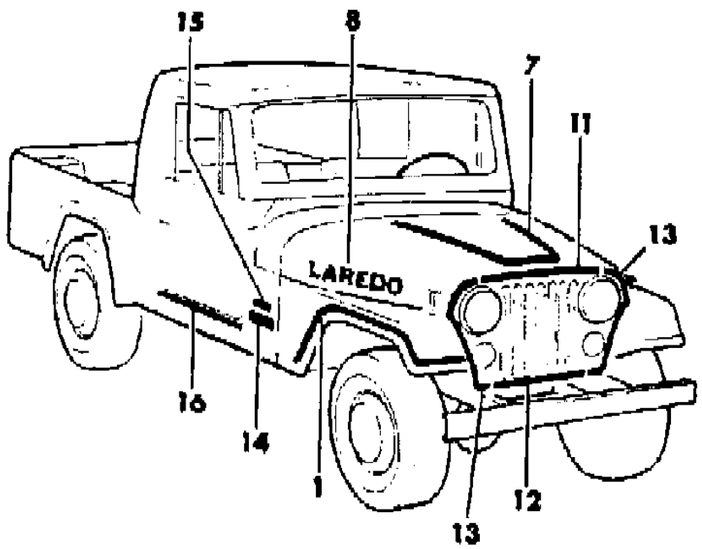

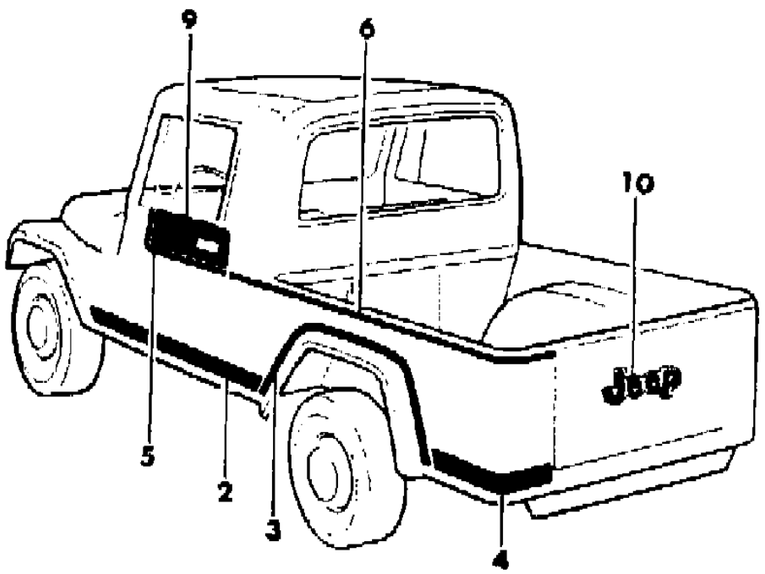

ITEM	PART NUMBER	QTY	BODY	MODEL	DESCRIPTION
	J576 4572-3	1			Nutmeg
10					DECAL, Jeep, Rear
	J576 1891	1			Burnt Orange/Nutmeg
	J576 1890	1			Silver
11	J575 0719	1			DECAL, Grille, Upper, Black
12	J575 0722	1			DECAL, Grille, Lower, Black
13	J575 0720-1	1			DECAL, Grille, Side, Black
14					DECAL, Jeep
	J576 1024	2			Burnt Orange
	J575 0564	2			Silver
15					DECAL, Cowl, Diesel
	J575 0284	2			Black
	J575 7491	2			Silver
16	J576 5270	2			PROTECTOR, Scuff, Clear

(a) Used on 1984 vehicles until 11-11-83, VIN NO. 039650 (c) These Decals are used on 1983 vehicles after approximately 5-1-83
(b) Used on 1984 vehicles beginning 11-11-83, VIN No. 039651 (c) These Decals are used on 1983 vehicles after approximately 5-1-83

MODEL CODES
16=Cherokee 2 Dr.(1981-83)
17=Cherokee 2 Dr.(1981-83)
73=Cherokee 2WD-2 Dr.(1984-86)
74=Cherokee 2WD-4 Dr.(1984-86)
18=Cherokee 4 Dr.(1981-83)
77=Cherokee 4WD-2 Dr.(1984-86)
78=Cherokee 4WD-4 Dr.(1984-86)
85=CJ-5 (1981-83)
86=CJ-6(1981)
87=CJ-7(1981-86)
88=CJ-8, Scrambler(1981-86)
64=Comanche 2WD-6 Ft. Box(1986)
66=Comanche 2WD-7 Ft. Box(1986)
63=Comanche 4WD-6 Ft. Box(1986)
65=Comanche 4WD-7 Ft. Box(1986)
15=Grand Wagoneer 4 Dr.(1984-86)
25=J-10 Truck 7 Ft. Box(1981-84)
26=J10 Truck 8 Ft. Box(1981-86)
27=J-20 Truck 8 Ft. Box(1981-86)
15=Wagoneer 4 Dr.(1981-83)
75=Wagoneer 4WD-4 Dr.(1984-86)

BODY
CJ=CJ-5, CJ-6, CJ-7, CJ-8, Scrambler(1981-86)
MJ=Comanche Pickup(1986)

STYLES
SJ=Wagoneer(1981-83), Grand Wagoneer(1984-86), Cherokee(1981-83), J-10, J-20(1981-86)
XJ=Wagoneer(1984-86), Cherokee(1984-86)

AR = Use as Required - = Non Illustrated Part P.A.R. = Paint as Required

DECALS, EXTERIOR LAREDO, EXPORT WITH WORLD CAB CJ-8
Figure 23-2800

81J68 2800

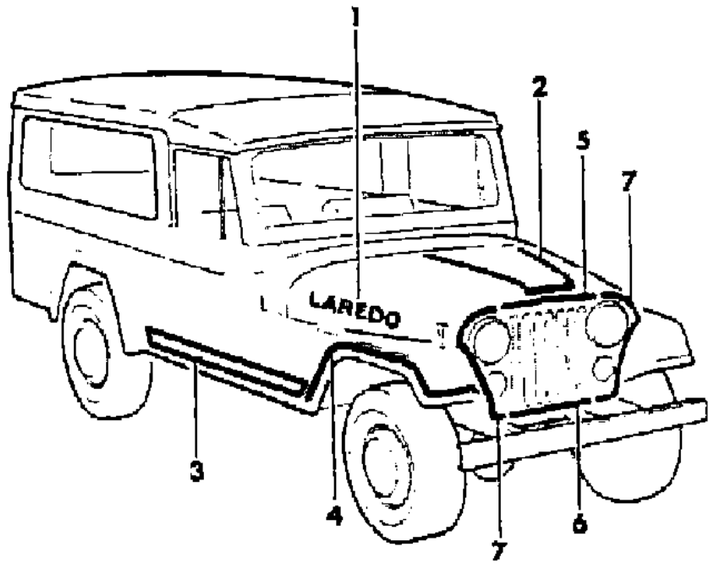

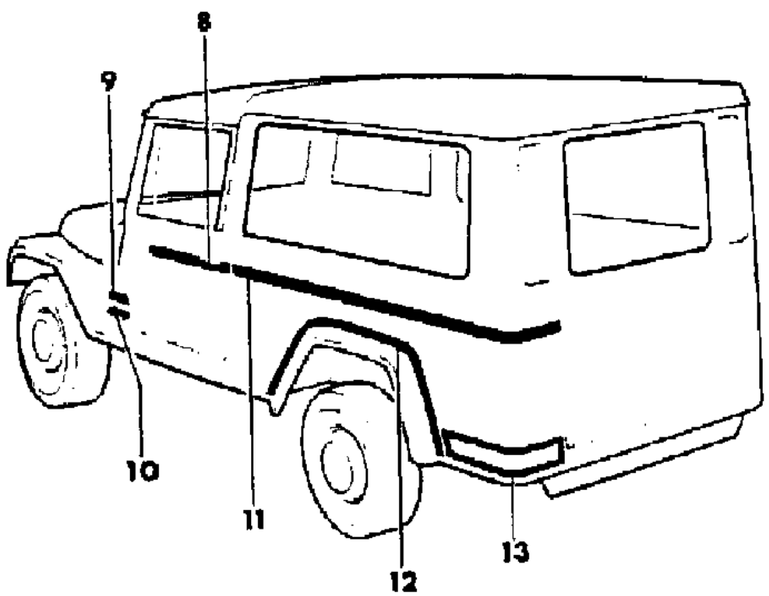

ITEM	PART NUMBER	QTY	BODY	MODEL	DESCRIPTION
1					DECAL, Hood, Laredo
	J576 1001	1			Burnt Orange/Nutmeg
	J575 4529	1			Silver
2					DECAL, Hood
	J576 0440	1			Burnt Orange/ Nutmeg
	J575 0705	1			Silver
3					DECAL, Body Side
	J576 0434-5	1			Burnt Orange/Nutmeg
	J575 7892-3	1			Silver
4					DECAL, Fender
					Right
	J576 0432	1			Burnt Orange/Nutmeg
	J575 0690	1			Silver
					Left
	J576 0433	1			Burnt Orange/Nutmeg
	J575 0689	1			Silver
5	J575 0719	1			DECAL, Grille, Upper, Black
6	J575 0722	1			DECAL, Grille, Lower, Black
7	J575 0720-1	1			DECAL, Grille, Side, Black
8					DECAL, Door
					Right
	J805 3098	1			Burnt Orange/Nutmeg
	J805 3100	1			Silver
					Left
	J805 3097	1			Burnt Orange/Nutmeg
	J805 3099	1			Silver
9					DECAL, Diesel
	J575 0284	1			Black
	J575 7491	1			Silver
10					DECAL, Jeep
	J576 1024	1			Burnt Orange
	J575 0564	1			Silver
11					DECAL, Rear Quarter
					Right
	J805 3114	1			Burnt Orange/Nutmeg
	J805 3116	1			Silver
					Left
	J805 3113	1			Burnt Orange/Nutmeg
	J805 3115	1			Silver

MODEL CODES

16=Cherokee 2 Dr.(1981-83)
17=Cherokee 2 Dr.(1981-83)
73=Cherokee 2WD-2 Dr.(1984-86)
74=Cherokee 2WD-4 Dr.(1984-86)
18=Cherokee 4 Dr.(1981-83)
77=Cherokee 4WD-2 Dr.(1984-86)
78=Cherokee 4WD-4 Dr.(1984-86)
85=CJ-5 (1981-83)
86=CJ-6(1981)
87=CJ-7(1981-86)
88=CJ-8, Scrambler(1981-86)
64=Comanche 2WD-6 Ft. Box(1986)
66=Comanche 2WD-7 Ft. Box(1986)
63=Comanche 4WD-6 Ft. Box(1986)
65=Comanche 4WD-7 Ft. Box(1986)
15=Grand Wagoneer 4 Dr.(1984-86)
25=J-10 Truck 7 Ft. Box(1981-84)
26=J10 Truck 8 Ft. Box(1981-86)
27=J-20 Truck 8 Ft. Box(1981-86)
15=Wagoneer 4 Dr.(1981-83)
75=Wagoneer 4WD-4 Dr.(1984-86)

BODY
CJ=CJ-5, CJ-6, CJ-7, CJ-8, Scrambler(1981-86)
MJ=Comanche Pickup(1986)

STYLES
SJ=Wagoneer(1981-83), Grand Wagoneer(1984-86), Cherokee(1981-83), J-10, J-20(1981-86)
XJ=Wagoneer(1984-86), Cherokee(1984-86)

AR = Use as Required - = Non Illustrated Part P.A.R. = Paint as Required

DECALS, EXTERIOR LAREDO, EXPORT WITH WORLD CAB CJ-8
Figure 23-2800

81J68 2800

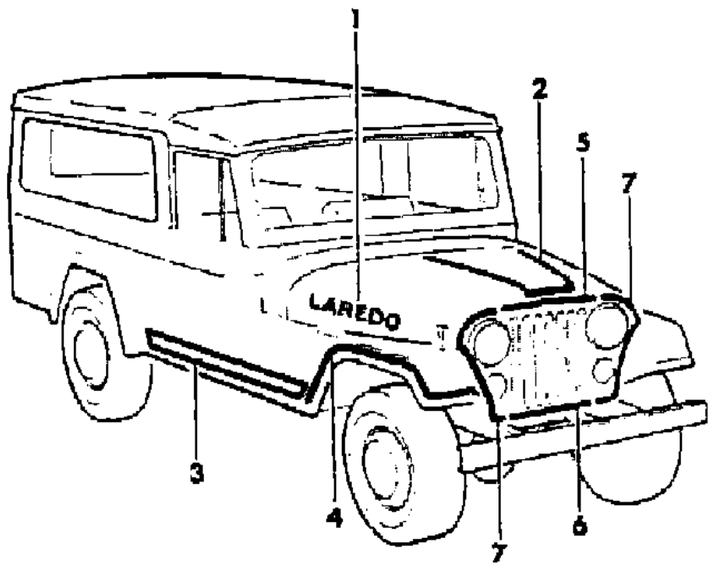

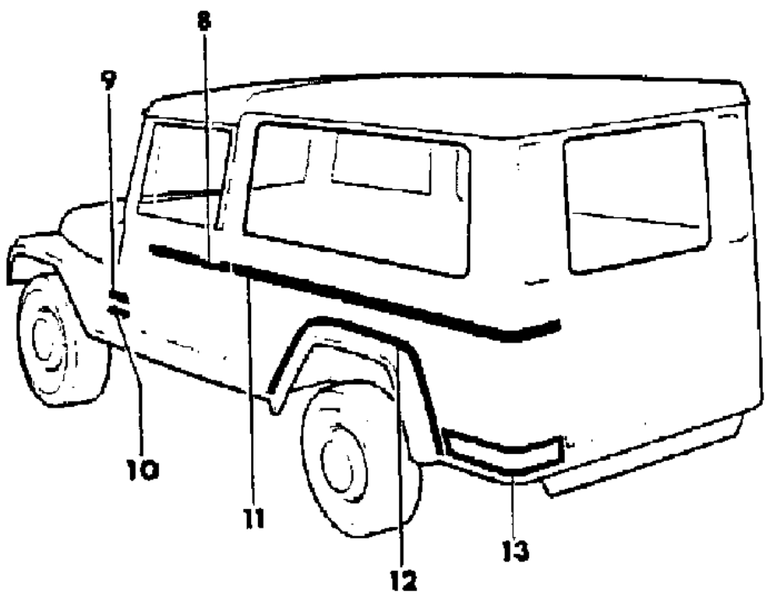

ITEM	PART NUMBER	QTY	BODY	MODEL	DESCRIPTION
12					DECAL, Wheel Opening
	J576 0438-9	1			Burnt Orange/Nutmeg
	J575 7896-7	1			Silver
13					DECAL, Rear Quarter
	J576 0436-7	1			Burnt Orange/Nutmeg
	J575 7900-1	1			Silver

MODEL CODES

16=Cherokee 2 Dr.(1981-83)
17=Cherokee 2 Dr.(1981-83)
73=Cherokee 2WD-2 Dr.(1984-86)
74=Cherokee 2WD-4 Dr.(1984-86)
18=Cherokee 4 Dr.(1981-83)
77=Cherokee 4WD-2 Dr.(1984-86)
78=Cherokee 4WD-4 Dr.(1984-86)
85=CJ-5 (1981-83)
86=CJ-6(1981)
87=CJ-7(1981-86)
88=CJ-8, Scrambler(1981-86)
64=Comanche 2WD-6 Ft. Box(1986)
66=Comanche 2WD-7 Ft. Box(1986)
63=Comanche 4WD-6 Ft. Box(1986)
65=Comanche 4WD-7 Ft. Box(1986)
15=Grand Wagoneer 4 Dr.(1984-86)
25=J-10 Truck 7 Ft. Box(1981-84)
26=J10 Truck 8 Ft. Box(1981-86)
27=J-20 Truck 8 Ft. Box(1981-86)
15=Wagoneer 4 Dr.(1981-83)
75=Wagoneer 4WD-4 Dr.(1984-86)

BODY
CJ=CJ-5, CJ-6, CJ-7, CJ-8, Scrambler(1981-86)
MJ=Comanche Pickup(1986)

STYLES
SJ=Wagoneer(1981-83), Grand Wagoneer(1984-86), Cherokee(1981-83), J-10, J-20(1981-86)
XJ=Wagoneer(1984-86), Cherokee(1984-86)

AR = Use as Required - = Non Illustrated Part P.A.R. = Paint as Required

DECALS, EXTERIOR LIMITED, VENEZUELA WITH WORLD CAB CJ-8
Figure 23-2900

81J68 2900

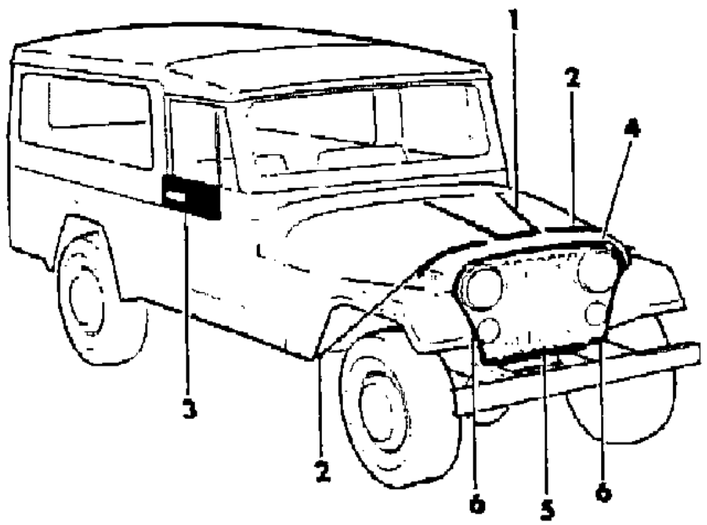

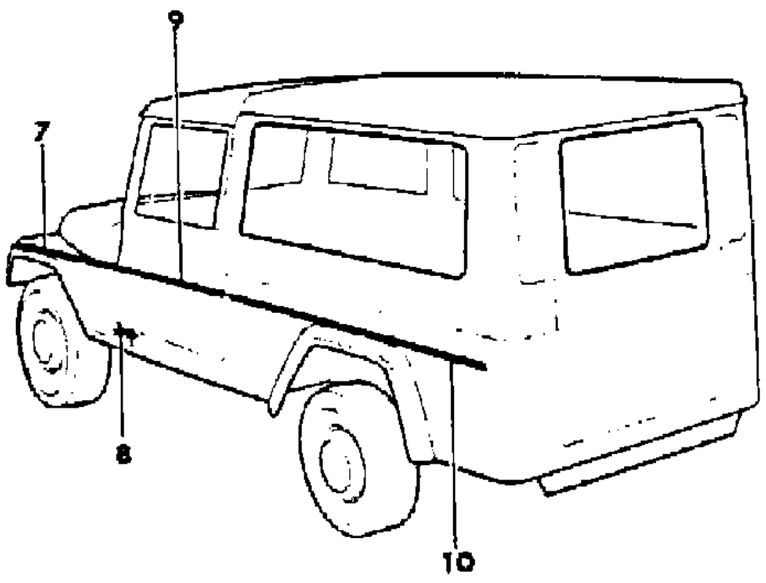

ITEM	PART NUMBER	QTY	BODY	MODEL	DESCRIPTION
1					DECAL, Hood
	J576 1808	1			Beige/Orange
	J576 1809	1			Light Blue/Navy Blue
2					DECAL, Hood, Front
	J576 1810-1	1			Beige/Orange
	J576 1812-3	1			Light Blue/Navy Blue
3					APPLIQUE, Door
	J576 0250-1	1			Nutmeg
	J576 0718-9	1			Slate Blue
	J576 0716-7	1			Silver
	J576 0756-7	1			White
4					DECAL, Grille, Upper
	J576 1806	1			Orange
	J576 1807	1			Navy Blue
5					DECAL, Grille, Lower
	J576 1800	1			Orange
	J576 1801	1			Navy Blue
6					DECAL, Grille, Side
	J576 1802-3	1			Orange
	J576 1804-5	1			Navy Blue
7					DECAL, Fender
	J576 1814-5	1			Beige/Orange
	J576 1816-7	1			Light Blue/Navy Blue
8					DECAL, Jeep
	J576 1024	1			Burnt Orange
	J576 0845	1			Navy Blue
9					DECAL, Door
	J576 1818-9	1			Beige/Orange
	J576 1820-1	1			Light Blue/Navy Blue
10					DECAL, Rear Quarter
					Right
	9500 0023	1			Beige/Orange
	9500 0025	1			Light Blue/Navy Blue
					Left
	9500 0024	1			Beige/Orange
	9500 0026	1			Light Blue/Navy Blue

MODEL CODES

16=Cherokee 2 Dr.(1981-83)
17=Cherokee 2 Dr.(1981-83)
73=Cherokee 2WD-2 Dr.(1984-86)
74=Cherokee 2WD-4 Dr.(1984-86)
18=Cherokee 4 Dr.(1981-83)
77=Cherokee 4WD-2 Dr.(1984-86)
78=Cherokee 4WD-4 Dr.(1984-86)
85=CJ-5 (1981-83)
86=CJ-6(1981)
87=CJ-7(1981-86)
88=CJ-8, Scrambler(1981-86)
64=Comanche 2WD-6 Ft. Box(1986)
66=Comanche 2WD-7 Ft. Box(1986)
63=Comanche 4WD-6 Ft. Box(1986)
65=Comanche 4WD-7 Ft. Box(1986)
15=Grand Wagoneer 4 Dr.(1984-86)
25=J-10 Truck 7 Ft. Box(1981-84)
26=J10 Truck 8 Ft. Box(1981-86)
27=J-20 Truck 8 Ft. Box(1981-86)
15=Wagoneer 4 Dr.(1981-83)
75=Wagoneer 4WD-4 Dr.(1984-86)

BODY
CJ=CJ-5, CJ-6, CJ-7, CJ-8, Scrambler(1981-86)
MJ=Comanche Pickup(1986)

STYLES
SJ=Wagoneer(1981-83), Grand Wagoneer(1984-86), Cherokee(1981-83), J-10, J-20(1981-86)
XJ=Wagoneer(1984-86), Cherokee(1984-86)

AR = Use as Required - = Non Illustrated Part P.A.R. = Paint as Required

« RETURN TO GROUP INDEX

NAMEPLATES XJ CHEROKEE 4 DOOR
Figure 23-3000

81J68 3000

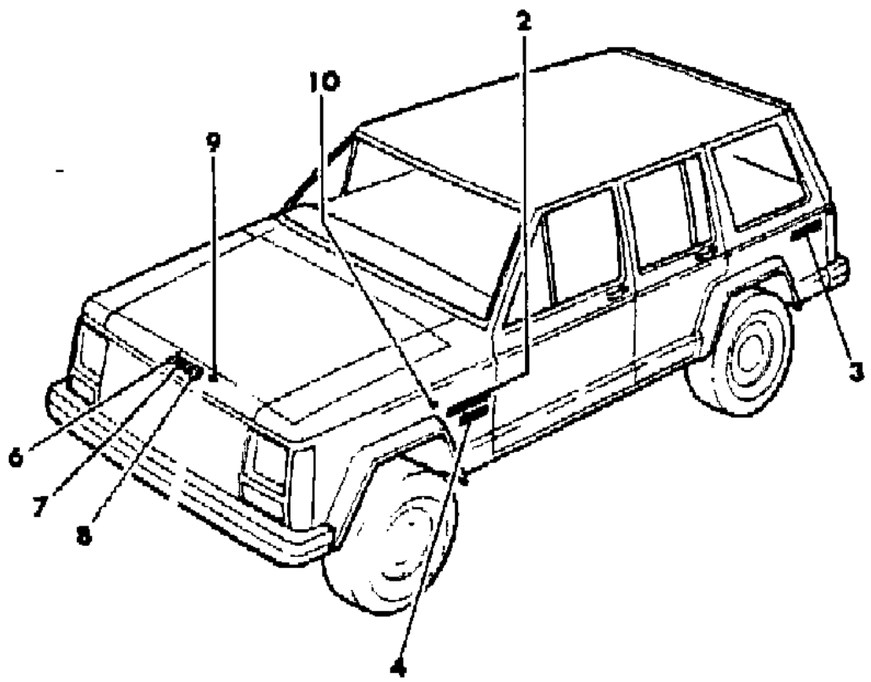

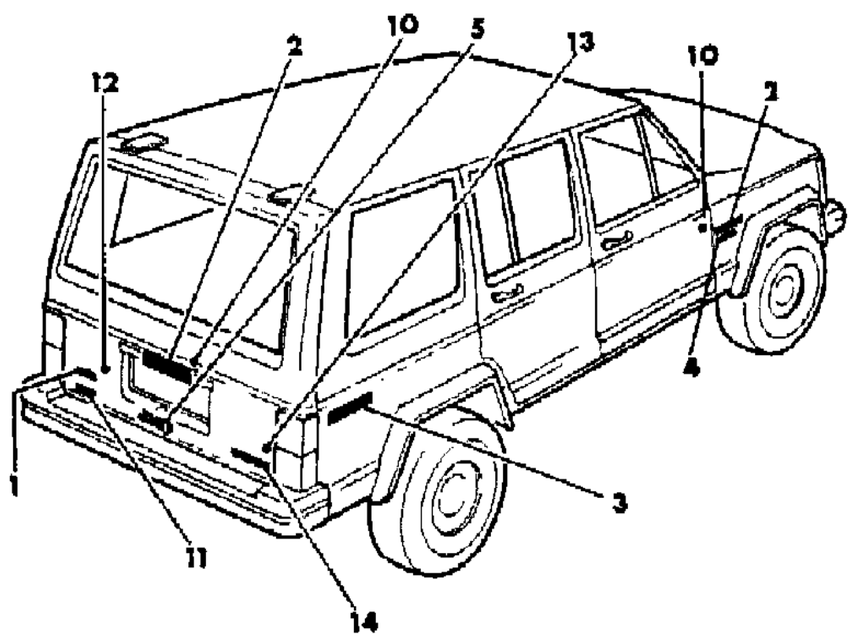

ITEM	PART NUMBER	QTY	BODY	MODEL	DESCRIPTION
1					NAMEPLATE
	5501 0893	1			2.5 Litre
	5500 5222	1			V6 2.8 Litre: 1984-85
	5501 0894	1			V6 2.8 Litre: 1986
	5500 6610	1			Turbo Diesel: 1985
	5501 0895	1			Turbo Diesel: 1986
2	5505 2503	AR			NAMEPLATE, Cherokee
3					NAMEPLATE
	5500 5712	2			Selec Trac: 1984-85
	5501 0896	2			Selec Trac: 1986
	5500 7817	2			4X4
	5500 5713	2			4 Wheel Drive
4					NAMEPLATE
	5500 3322	2			Limited: 1984-85
	5501 0904	2			Limited: 1986
	5505 2504	2			Pioneer: 1984-85
	5501 0898	2			Pioneer: 1986
	5500 3321	2			Laredo: 1985
	5501 0899	2			Laredo: 1986
5	5500 8340	1			NAMEPLATE, Jeep
6					NAMEPLATE
	5500 3324	1			J: 1984-85
	5501 0901	1			J: 1986
7					NAMEPLATE
	5500 3325	2			e: 1984-85
	5501 0902	2			e: 1986
8					NAMEPLATE
	5500 3326	1			p: 1984-85
	5501 0903	1			p: 1986
9	1150 2557	4			NUT
10	J400 1335	AR			CLIP
11	5500 8338	1			NAMEPLATE, Fuel Injection
12	J400 3657	2			CLIP
13	J400 3656	AR			CLIP
14	5500 8339	1			NAMEPLATE, Command Trac

MODEL CODES

16=Cherokee 2 Dr.(1981-83)
17=Cherokee 2 Dr.(1981-83)
73=Cherokee 2WD-2 Dr.(1984-86)
74=Cherokee 2WD-4 Dr.(1984-86)
18=Cherokee 4 Dr.(1981-83)
77=Cherokee 4WD-2 Dr.(1984-86)
78=Cherokee 4WD-4 Dr.(1984-86)
85=CJ-5 (1981-83)
86=CJ-6(1981)
87=CJ-7(1981-86)
88=CJ-8, Scrambler(1981-86)
64=Comanche 2WD-6 Ft. Box(1986)
66=Comanche 2WD-7 Ft. Box(1986)
63=Comanche 4WD-6 Ft. Box(1986)
65=Comanche 4WD-7 Ft. Box(1986)
15=Grand Wagoneer 4 Dr.(1984-86)
25=J-10 Truck 7 Ft. Box(1981-84)
26=J10 Truck 8 Ft. Box(1981-86)
27=J-20 Truck 8 Ft. Box(1981-86)
15=Wagoneer 4 Dr.(1981-83)
75=Wagoneer 4WD-4 Dr.(1984-86)

BODY
CJ=CJ-5, CJ-6, CJ-7, CJ-8, Scrambler(1981-86)
MJ=Comanche Pickup(1986)

STYLES
SJ=Wagoneer(1981-83), Grand Wagoneer(1984-86), Cherokee(1981-83), J-10, J-20(1981-86)
XJ=Wagoneer(1984-86), Cherokee(1984-86)

AR = Use as Required - = Non Illustrated Part P.A.R. = Paint as Required

« RETURN TO GROUP INDEX

MOULDINGS, EXTERIOR, UPPER XJ CHEROKEE 4 DOOR
Figure 23-3100

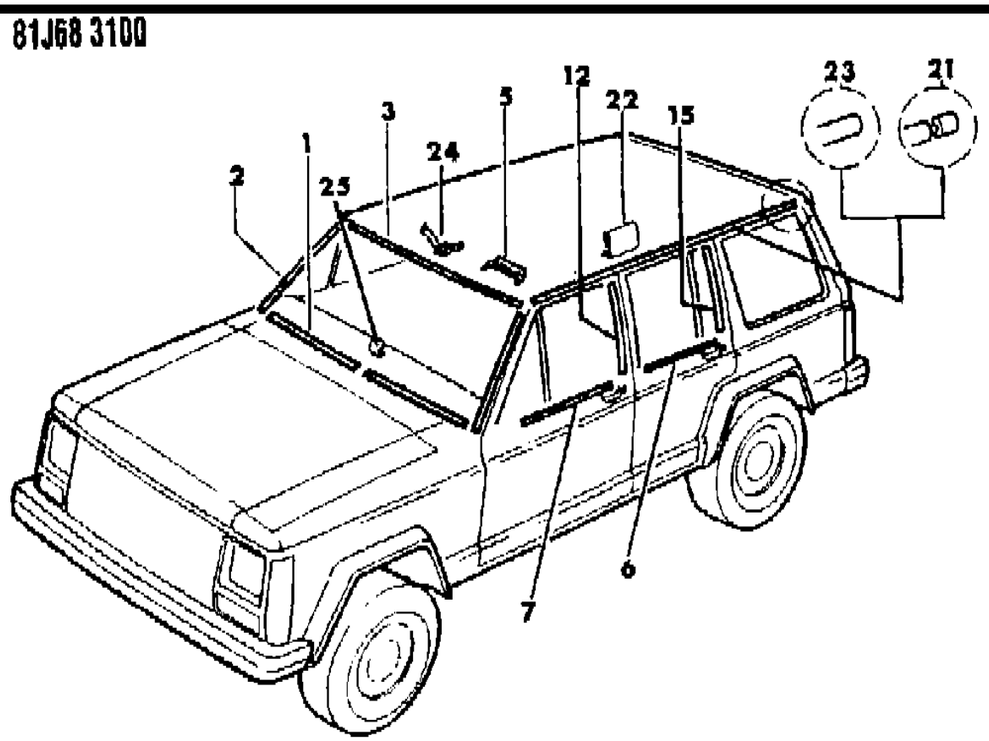

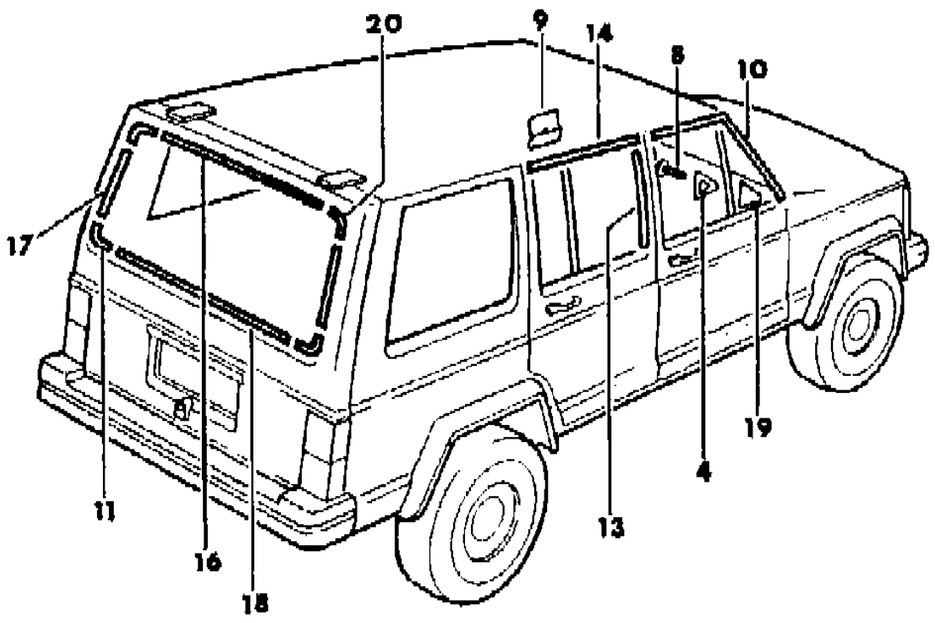

ITEM	PART NUMBER	QTY	BODY	MODEL	DESCRIPTION
1					MOULDING, Windshield, P.A.R.
	5500 6380	1			Right
	5500 2509	1			Left
2	5500 0546-7	1			MOULDING, Windshield, P.A.R.
3	5500 0544	1			MOULDING, P.A.R.
4	5500 5430-1	1			GASKET
5	J400 6211	26			CLIP
6	5500 5294	2			MOULDING, Door
7	5500 5284-5	1			MOULDING, Door
8	3420 1957	4			SCREW
9	5500 5384	4			CLIP
10	5500 5278-9	1			MOULDING, Door
11	5500 5334	2			CAP, Moulding
12	5500 5282-3	1			MOULDING, Door
13	5500 5290-1	1			MOULDING, Door
14	5500 5292-3	1			MOULDING, Door
15	5500 5288-9	1			MOULDING, Door
16	5500 5331	1			MOULDING, Lift Door
17	5500 5308	2			MOULDING, Lift Door
18	5500 5332	1			MOULDING, Lift Door
19	5500 5312-3	1			COVER, used in place of mirror
20	5500 5333	2			CAP, Moulding
21	5501 3656-7	1			MOULDING, Drip, 1986, P.A.R.
22	3500 2115	AR			CLIP
23	5500 0548-9	1			MOULDING, Drip, P.A.R.
24	5500 2605	26			CLIP
25	5500 6386	1			CLIP, Cover, P.A.R.

MODEL CODES

16=Cherokee 2 Dr.(1981-83)
17=Cherokee 2 Dr.(1981-83)
73=Cherokee 2WD-2 Dr.(1984-86)
74=Cherokee 2WD-4 Dr.(1984-86)
18=Cherokee 4 Dr.(1981-83)
77=Cherokee 4WD-2 Dr.(1984-86)
78=Cherokee 4WD-4 Dr.(1984-86)
85=CJ-5 (1981-83)
86=CJ-6(1981)
87=CJ-7(1981-86)
88=CJ-8, Scrambler(1981-86)
64=Comanche 2WD-6 Ft. Box(1986)
66=Comanche 2WD-7 Ft. Box(1986)
63=Comanche 4WD-6 Ft. Box(1986)
65=Comanche 4WD-7 Ft. Box(1986)
15=Grand Wagoneer 4 Dr.(1984-86)
25=J-10 Truck 7 Ft. Box(1981-84)
26=J10 Truck 8 Ft. Box(1981-86)
27=J-20 Truck 8 Ft. Box(1981-86)
15=Wagoneer 4 Dr.(1981-83)
75=Wagoneer 4WD-4 Dr.(1984-86)

BODY
CJ=CJ-5, CJ-6, CJ-7, CJ-8, Scrambler(1981-86)
MJ=Comanche Pickup(1986)

STYLES
SJ=Wagoneer(1981-83), Grand Wagoneer(1984-86), Cherokee(1981-83), J-10, J-20(1981-86)
XJ=Wagoneer(1984-86), Cherokee(1984-86)

AR = Use as Required - = Non Illustrated Part P.A.R. = Paint as Required

« RETURN TO GROUP INDEX

MOULDINGS, EXTERIOR , LOWER XJ CHEROKEE 4 DOOR
Figure 23-3200

81J68 3200

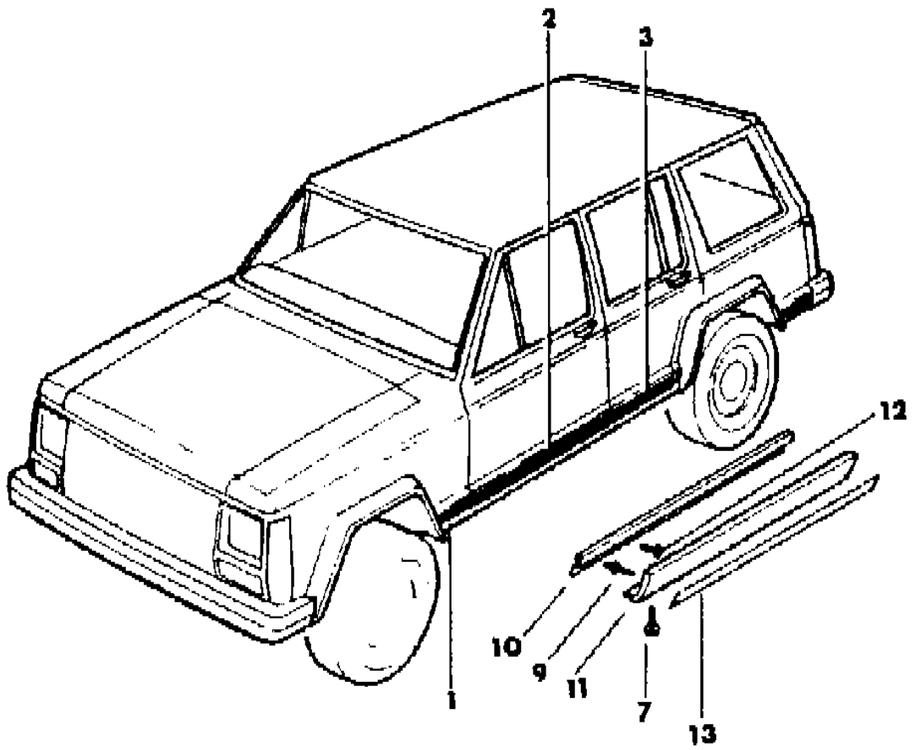

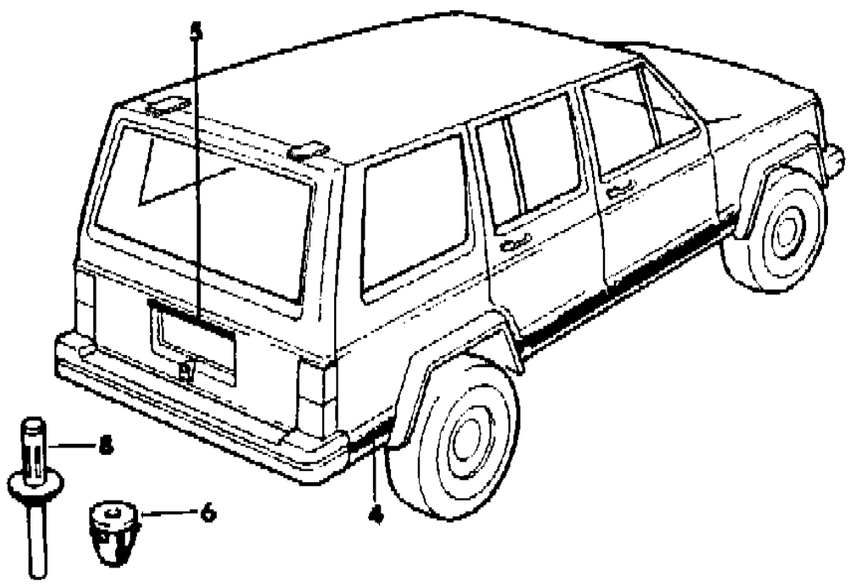

ITEM	PART NUMBER	QTY	BODY	MODEL	DESCRIPTION
1					MOULDING, Door
	5500 3166-7	1			Black/Chrome
	5500 3048-9	1			Black
2					MOULDING, Door
	5500 3168-9	1			Black/Chrome
	5500 3050-1	1			Black
3					MOULDING, Door
	5500 3170-1	1			Black/Chrome
	5500 3052-3	1			Black
4					MOULDING, Rear Quarter
	5500 3172-3	1			Black/Chrome
	5500 3042-3	1			Black
5	5501 3411	1			OVERLAY, License Plate
6	J400 1335	1			CLIP
7	3420 1984	14			SCREW
8	3420 2204	2			RIVET
9	J400 2185	12			RIVET
10	5500 5409	2			RETAINER
11	5500 5518	2			APPLIQUE
12	3420 1292	2			SCREW
13	5505 2524	2			FILM, Abrasion Resistant ***

MODEL CODES

16=Cherokee 2 Dr.(1981-83)
17=Cherokee 2 Dr.(1981-83)
73=Cherokee 2WD-2 Dr.(1984-86)
74=Cherokee 2WD-4 Dr.(1984-86)
18=Cherokee 4 Dr.(1981-83)
77=Cherokee 4WD-2 Dr.(1984-86)
78=Cherokee 4WD-4 Dr.(1984-86)
85=CJ-5 (1981-83)
86=CJ-6(1981)
87=CJ-7(1981-86)
88=CJ-8, Scrambler(1981-86)
64=Comanche 2WD-6 Ft. Box(1986)
66=Comanche 2WD-7 Ft. Box(1986)
63=Comanche 4WD-6 Ft. Box(1986)
65=Comanche 4WD-7 Ft. Box(1986)
15=Grand Wagoneer 4 Dr.(1984-86)
25=J-10 Truck 7 Ft. Box(1981-84)
26=J10 Truck 8 Ft. Box(1981-86)
27=J-20 Truck 8 Ft. Box(1981-86)
15=Wagoneer 4 Dr.(1981-83)
75=Wagoneer 4WD-4 Dr.(1984-86)

BODY
CJ=CJ-5, CJ-6, CJ-7, CJ-8, Scrambler(1981-86)
MJ=Comanche Pickup(1986)

STYLES
SJ=Wagoneer(1981-83), Grand Wagoneer(1984-86), Cherokee(1981-83), J-10, J-20(1981-86)
XJ=Wagoneer(1984-86), Cherokee(1984-86)

AR = Use as Required - = Non Illustrated Part P.A.R. = Paint as Required

« RETURN TO GROUP INDEX

DECALS, EXTERIOR PIONEER, 1984-85 XJ CHEROKEE 4 DOOR
Figure 23-3300

81J68 3300

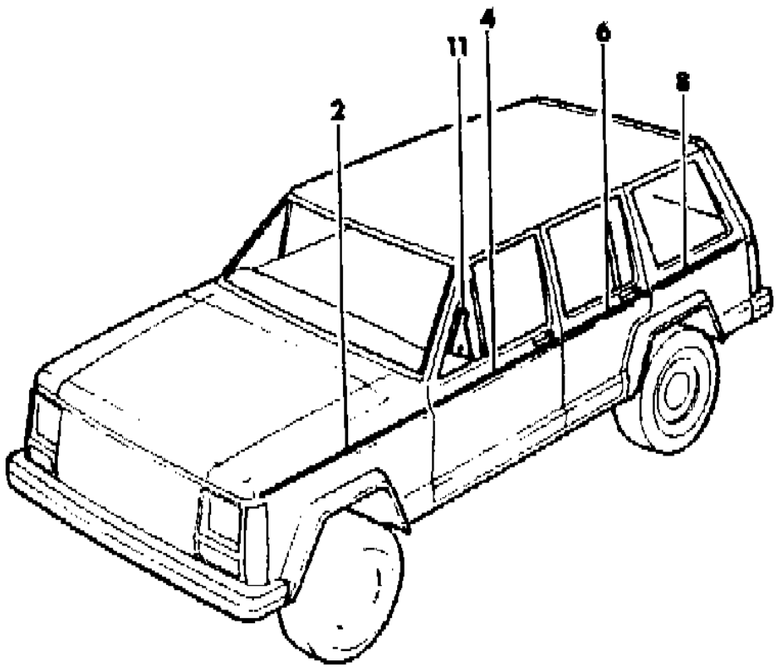

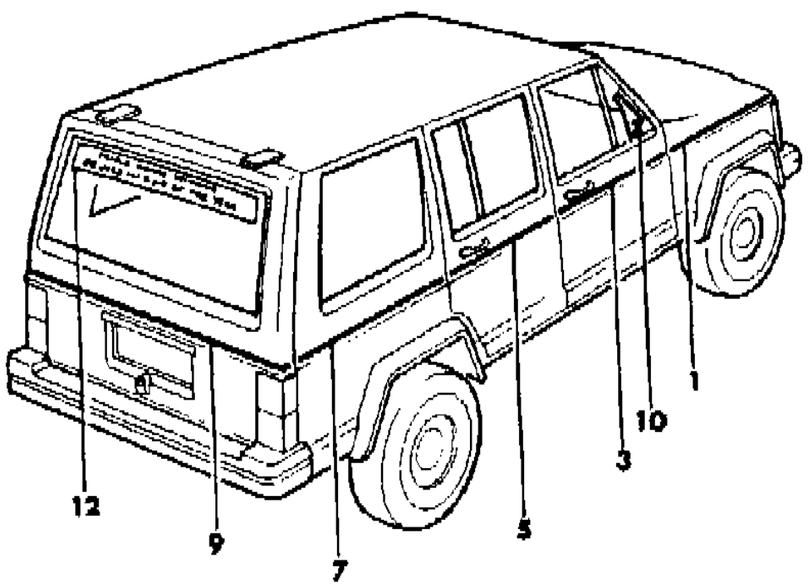

ITEM	PART NUMBER	QTY	BODY	MODEL	DESCRIPTION
1	5500 5424	1			DECAL, Fender, Red, Modification Required
2	5500 5424	1			DECAL, Fender, Red, Modification Required
3	5500 5424	1			DECAL, Door, Red, Modification Required
4	5500 5424	1			DECAL, Door, Red, Modification Required
5	5500 5424	1			DECAL, Door, Red, Modification Required
6	5500 5424	1			DECAL, Door, Red, Modification Required
7	5500 5424	1			DECAL, Rear Quarter, Red, Modification Required
8	5500 5424	1			DECAL, Rear Quarter, Red, Modification Required
9	5500 5424	1			DECAL, Lift Door, Red
10	5500 6220	1			DECAL, Door, Black
11	5500 6221	1			DECAL, Door, Black
12	5500 7400	1			DECAL, "4X4 of The Year"

MODEL CODES

16=Cherokee 2 Dr.(1981-83)
17=Cherokee 2 Dr.(1981-83)
73=Cherokee 2WD-2 Dr.(1984-86)
74=Cherokee 2WD-4 Dr.(1984-86)
18=Cherokee 4 Dr.(1981-83)
77=Cherokee 4WD-2 Dr.(1984-86)
78=Cherokee 4WD-4 Dr.(1984-86)
85=CJ-5 (1981-83)
86=CJ-6(1981)
87=CJ-7(1981-86)
88=CJ-8, Scrambler(1981-86)
64=Comanche 2WD-6 Ft. Box(1986)
66=Comanche 2WD-7 Ft. Box(1986)
63=Comanche 4WD-6 Ft. Box(1986)
65=Comanche 4WD-7 Ft. Box(1986)
15=Grand Wagoneer 4 Dr.(1984-86)
25=J-10 Truck 7 Ft. Box(1981-84)
26=J10 Truck 8 Ft. Box(1981-86)
27=J-20 Truck 8 Ft. Box(1981-86)
15=Wagoneer 4 Dr.(1981-83)
75=Wagoneer 4WD-4 Dr.(1984-86)

BODY
CJ=CJ-5, CJ-6, CJ-7, CJ-8, Scrambler(1981-86)
MJ=Comanche Pickup(1986)

STYLES
SJ=Wagoneer(1981-83), Grand Wagoneer(1984-86), Cherokee(1981-83), J-10, J-20(1981-86)
XJ=Wagoneer(1984-86), Cherokee(1984-86)

AR = Use as Required - = Non Illustrated Part P.A.R. = Paint as Required

« RETURN TO GROUP INDEX

DECALS, EXTERIOR PIONEER, 1986 XJ CHEROKEE 4 DOOR
Figure 23-3400

81J68 3400

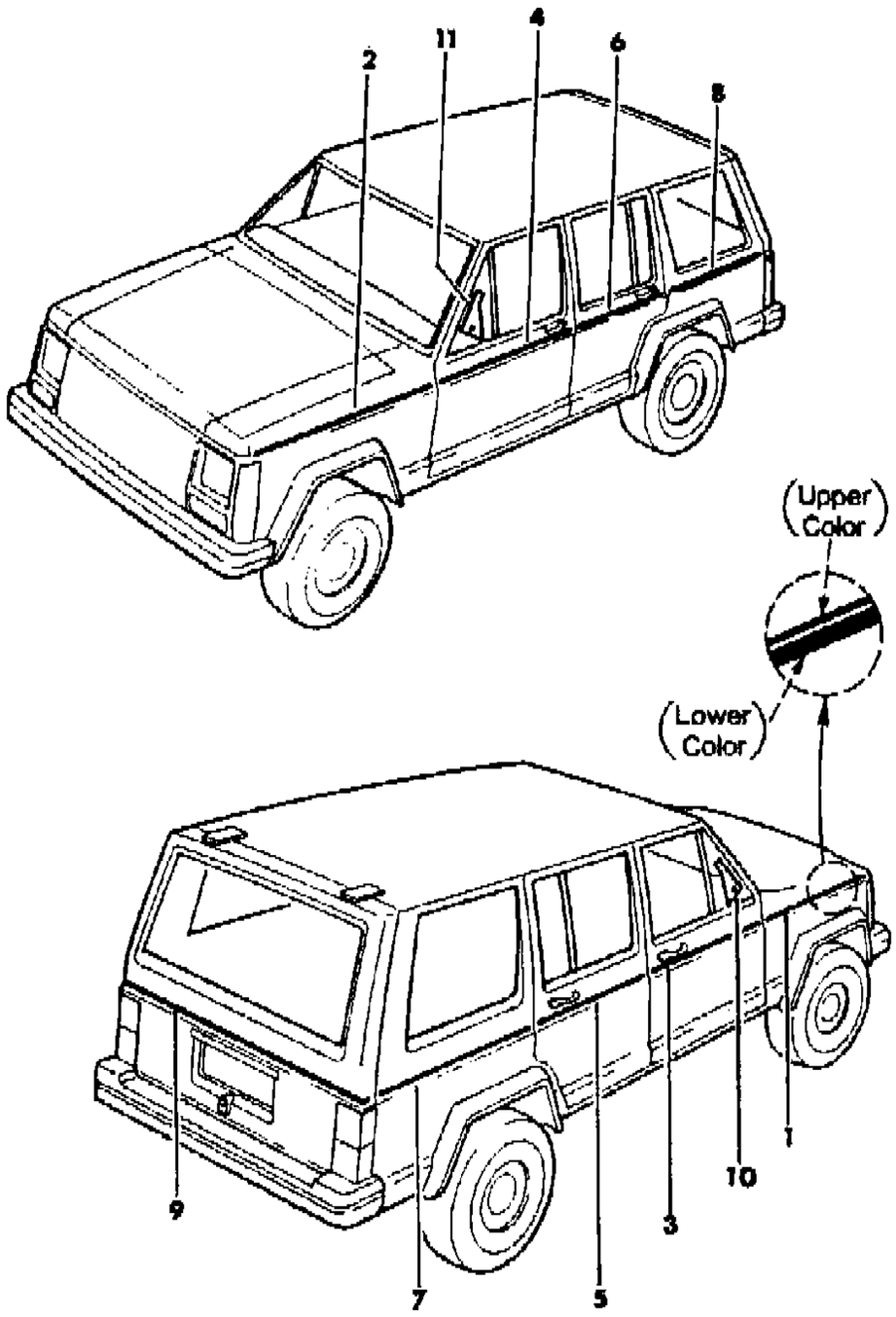

ITEM	PART NUMBER	QTY	BODY	MODEL	DESCRIPTION
1-2					DECAL, Fender
	5501 0088-9	1			Light Blue/Medium Blue
	5501 0094-5	1			Orange, Red
3-4					DECAL, Door
	5501 0106-7	1			Light Blue/Medium Blue
	5501 0096-7	1			Orange, Red
5-6					DECAL, Door
	5501 0108-9	1			Light Blue/Medium Blue
	5501 0098-9	1			Orange, Red
7-8					DECAL, Rear Quarter
	5501 0110-1	1			Light Blue/Medium Blue
	5501 0100-1	1			Orange, Red
9					DECAL, Lift Door
	5501 0087	1			Light Blue/Medium Blue
	5501 0112	1			Orange, Red
10-11	5500 6220-1	1			DECAL, Door, Black

MODEL CODES

16=Cherokee 2 Dr.(1981-83)
17=Cherokee 2 Dr.(1981-83)
73=Cherokee 2WD-2 Dr.(1984-86)
74=Cherokee 2WD-4 Dr.(1984-86)
18=Cherokee 4 Dr.(1981-83)
77=Cherokee 4WD-2 Dr.(1984-86)
78=Cherokee 4WD-4 Dr.(1984-86)
85=CJ-5 (1981-83)
86=CJ-6(1981)
87=CJ-7(1981-86)
88=CJ-8, Scrambler(1981-86)
64=Comanche 2WD-6 Ft. Box(1986)
66=Comanche 2WD-7 Ft. Box(1986)
63=Comanche 4WD-6 Ft. Box(1986)
65=Comanche 4WD-7 Ft. Box(1986)
15=Grand Wagoneer 4 Dr.(1984-86)
25=J-10 Truck 7 Ft. Box(1981-84)
26=J10 Truck 8 Ft. Box(1981-86)
27=J-20 Truck 8 Ft. Box(1981-86)
15=Wagoneer 4 Dr.(1981-83)
75=Wagoneer 4WD-4 Dr.(1984-86)

BODY
CJ=CJ-5, CJ-6, CJ-7, CJ-8, Scrambler(1981-86)
MJ=Comanche Pickup(1986)

STYLES
SJ=Wagoneer(1981-83), Grand Wagoneer(1984-86), Cherokee(1981-83), J-10, J-20(1981-86)
XJ=Wagoneer(1984-86), Cherokee(1984-86)

AR = Use as Required - = Non Illustrated Part P.A.R. = Paint as Required

« RETURN TO GROUP INDEX

DECALS, EXTERIOR 2 TONE, 1986 XJ CHEROKEE 4 DOOR
Figure 23-3500

81J68 3500

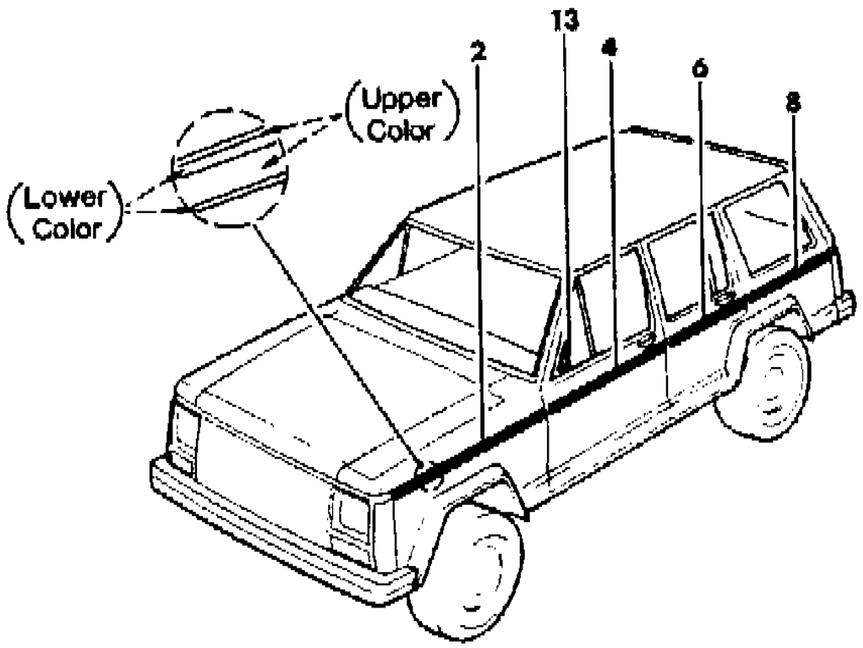

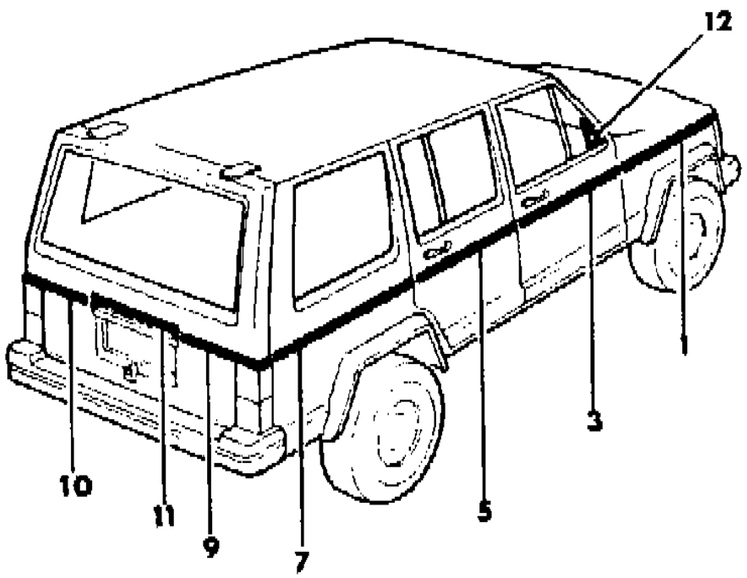

ITEM	PART NUMBER	QTY	BODY	MODEL	DESCRIPTION
1-2					DECAL, Fender
	5501 2638-9	1			Beige/Dark Honey/Beige/Dark Honey
	5501 4174-5	1			Beige/Dark Blue/Beige/Dark Blue
	5501 2644-5	1			Black/Garnet/Black/Garnet
	5501 2642-3	1			Sterling/Charcoal/Sterling/Charcoal
3-4					DECAL, Door
	5501 2630-1	1			Beige/Dark Honey/Beige/Dark Honey
	5501 4172-3	1			Beige/Dark Blue/Beige/Dark Blue
	5501 2636-7	1			Black/Garnet/Black/Garnet
	5501 2634-5	1			Sterling/Charcoal/Sterling/Charcoal
5-6					DECAL, Door
	5501 2758-9	1			Beige/Dark Honey/Beige/Dark Honey
	5501 4214-5	1			Beige/Dark Blue/Beige/Dark Blue
	5501 2764-5	1			Black/Garnet/Black/Garnet
	5501 2762-3	1			Sterling/Charcoal/Sterling/Charcoal
7-8					DECAL, Rear Quarter
	5501 2750-1	1			Beige/Dark Honey/Beige/Dark Honey
	5501 4212-3	1			Beige/Dark Blue/Beige/Dark Blue
	5501 2756-7	1			Black/Garnet/Black/Garnet
	5501 2754-5	1			Sterling/Charcoal/Sterling/Charcoal
9-10					DECAL, Lift Door
	5501 2700-1	1			Beige/Dark Honey/Beige/Dark Honey
	5501 4210-1	1			Beige/Dark Blue/Beige/Dark Blue
	5501 2706-7	1			Black/Garnet/Black/Garnet
	5501 2704-5	1			Sterling/Charcoal/Sterling/Charcoal
11					DECAL, Lift Door
	5501 2746	1			Dark Honey
	5501 4205	1			Dark Blue
	5501 2749	1			Garnet
	5501 2748	1			Charcoal
12-13	5500 6220-1	1			DECAL, Door, Black

MODEL CODES

16=Cherokee 2 Dr.(1981-83)	78=Cherokee 4WD-4 Dr.(1984-86)	64=Comanche 2WD-6 Ft. Box(1986)	25=J-10 Truck 7 Ft. Box(1981-84)
17=Cherokee 2 Dr.(1981-83)	85=CJ-5 (1981-83)	66=Comanche 2WD-7 Ft. Box(1986)	26=J10 Truck 8 Ft. Box(1981-86)
73=Cherokee 2WD-2 Dr.(1984-86)	86=CJ-6(1981)	63=Comanche 4WD-6 Ft. Box(1986)	27=J-20 Truck 8 Ft. Box(1981-86)
74=Cherokee 2WD-4 Dr.(1984-86)	87=CJ-7(1981-86)	65=Comanche 4WD-7 Ft. Box(1986)	15=Wagoneer 4 Dr.(1981-83)
18=Cherokee 4 Dr.(1981-83)	88=CJ-8, Scrambler(1981-86)	15=Grand Wagoneer 4 Dr.(1984-86)	75=Wagoneer 4WD-4 Dr.(1984-86)
77=Cherokee 4WD-2 Dr.(1984-86)			

BODY
CJ=CJ-5, CJ-6, CJ-7, CJ-8, Scrambler(1981-86)
MJ=Comanche Pickup(1986)

STYLES
SJ=Wagoneer(1981-83), Grand Wagoneer(1984-86), Cherokee(1981-83), J-10, J-20(1981-86)
XJ=Wagoneer(1984-86), Cherokee(1984-86)

AR = Use as Required - = Non Illustrated Part P.A.R. = Paint as Required

« RETURN TO GROUP INDEX

DECALS, EXTERIOR CHIEF TYPE 1 1984 XJ CHEROKEE 4 DOOR
Figure 23-3600

81J68 3600

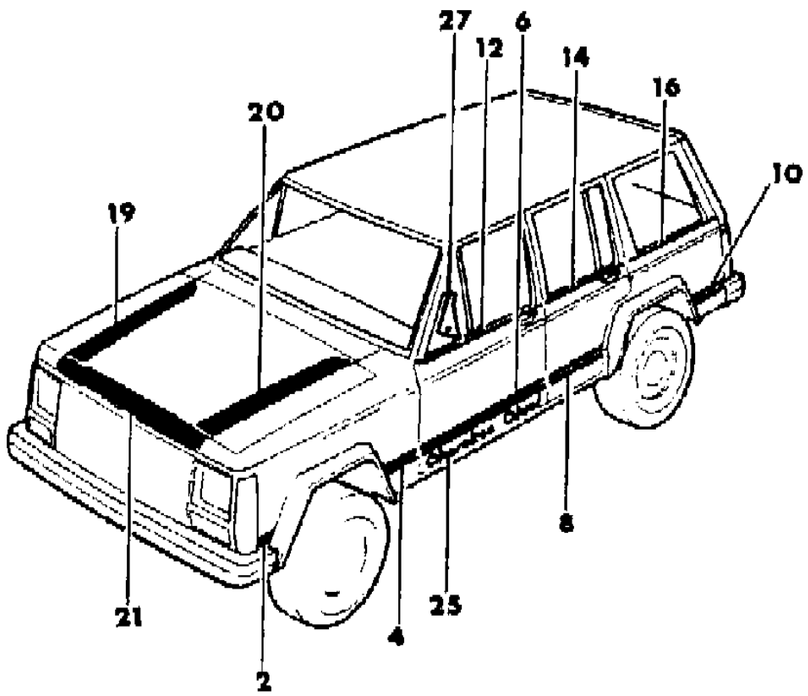

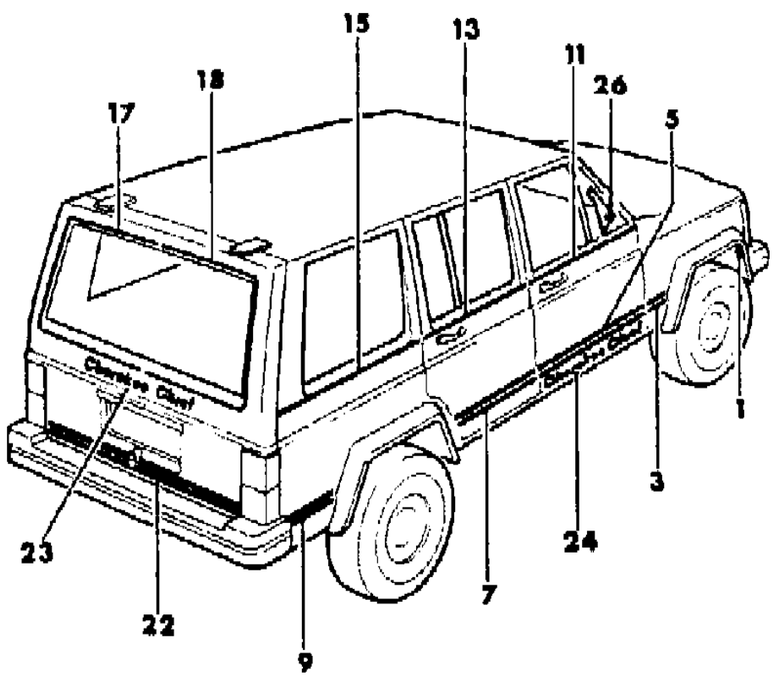

ITEM	PART NUMBER	QTY	BODY	MODEL	DESCRIPTION
1-2	5500 5180-1	1			DECAL, Fender
3-4	5500 5182-3	1			DECAL, Fender
5-6	5500 5184-5	1			DECAL, Door
7-8	5500 5188-9	1			DECAL, Door
9-10	5500 5192-3	1			DECAL, Rear Quarter
11-12	5500 5194-5	1			DECAL, Door
13-14	5500 5198-9	1			DECAL, Door
15-16	5500 5202-3	1			DECAL, Rear Quarter
17-18	5500 5206-7	1			DECAL, Lift Door
19-20	5500 5208-9	1			DECAL, Hood
21	5500 5179	1			DECAL, Grille Panel
22-23	5500 5210-1	1			DECAL, Lift Door
24-25	5500 5214-5	1			DECAL, Door
26-27	5500 6220-1	1			DECAL, Door

MODEL CODES
16=Cherokee 2 Dr.(1981-83)
17=Cherokee 2 Dr.(1981-83)
73=Cherokee 2WD-2 Dr.(1984-86)
74=Cherokee 2WD-4 Dr.(1984-86)
18=Cherokee 4 Dr.(1981-83)
77=Cherokee 4WD-2 Dr.(1984-86)
78=Cherokee 4WD-4 Dr.(1984-86)
85=CJ-5 (1981-83)
86=CJ-6(1981)
87=CJ-7(1981-86)
88=CJ-8, Scrambler(1981-86)
64=Comanche 2WD-6 Ft. Box(1986)
66=Comanche 2WD-7 Ft. Box(1986)
63=Comanche 4WD-6 Ft. Box(1986)
65=Comanche 4WD-7 Ft. Box(1986)
15=Grand Wagoneer 4 Dr.(1984-86)
25=J-10 Truck 7 Ft. Box(1981-84)
26=J10 Truck 8 Ft. Box(1981-86)
27=J-20 Truck 8 Ft. Box(1981-86)
15=Wagoneer 4 Dr.(1981-83)
75=Wagoneer 4WD-4 Dr.(1984-86)

BODY
CJ=CJ-5, CJ-6, CJ-7, CJ-8, Scrambler(1981-86)
MJ=Comanche Pickup(1986)

STYLES
SJ=Wagoneer(1981-83), Grand Wagoneer(1984-86), Cherokee(1981-83), J-10, J-20(1981-86)
XJ=Wagoneer(1984-86), Cherokee(1984-86)

AR = Use as Required - = Non Illustrated Part P.A.R. = Paint as Required

« RETURN TO GROUP INDEX

DECALS, EXTERIOR CHIEF, TYPE 2 1984, 1985-86 XJ CHEROKEE 4 DOOR
Figure 23-3700

81J68 3700

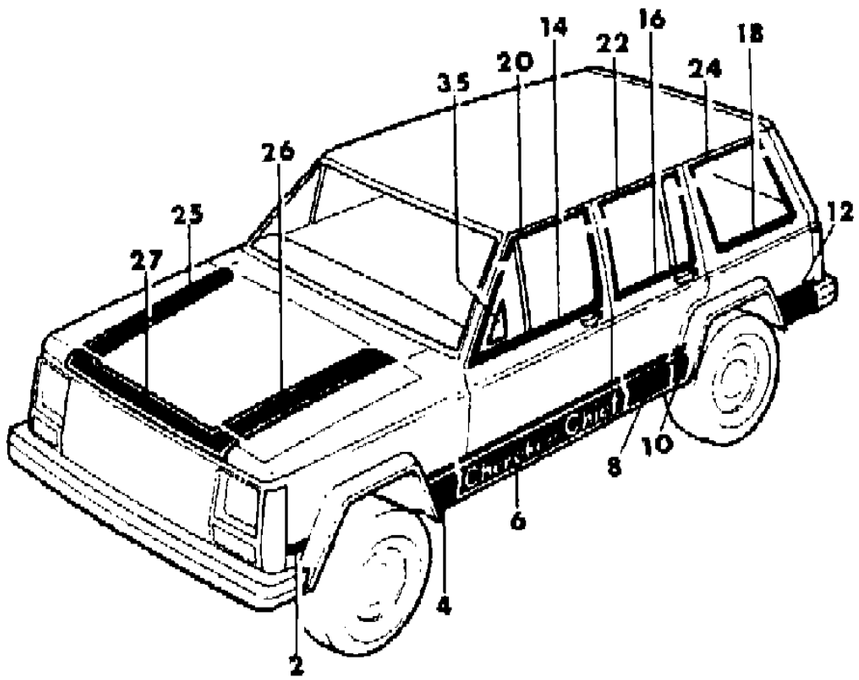

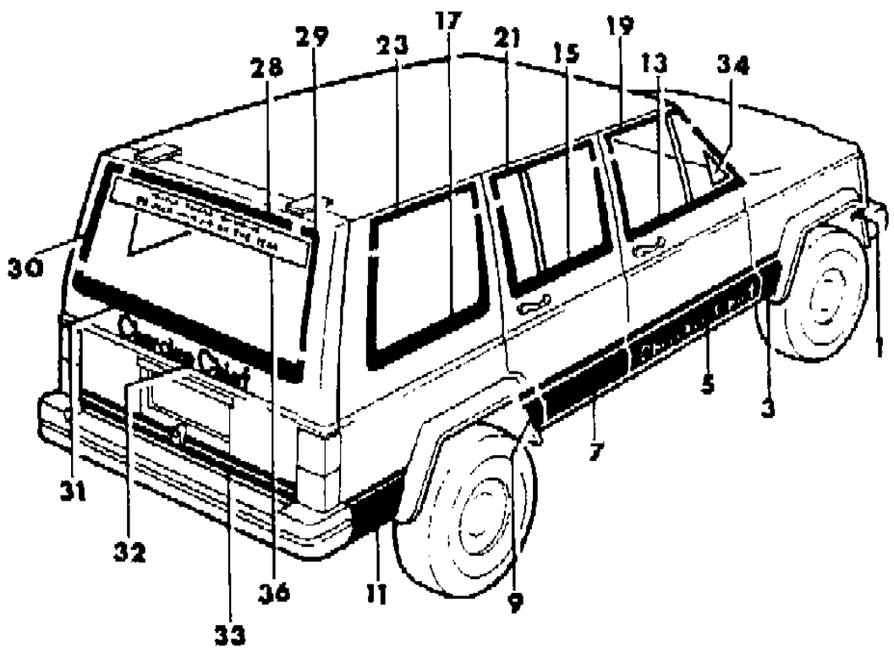

ITEM	PART NUMBER	QTY	BODY	MODEL	DESCRIPTION
1-2	5500 6772-3	1			DECAL, Fender: 1984-85
3-4	5500 6774-5	1			DECAL, Fender
5-6					DECAL, Door
	5500 6790-1	1			1984-85: small letters
	5500 9780-1	1			1986: capital letters
7-8	5500 6792-3	1			DECAL, Door
9-10	5500 6794-5	1			DECAL, Rear Quarter
11-12	5500 5192-3	1			DECAL, Rear Quarter, P.A.R.
13-14	5500 6798-9	1			DECAL, Door Frame
15-16	5500 6802-3	1			DECAL, Door Frame
17-18	5500 6806-7	1			DECAL, Rear Quarter
19-20	5500 6800-1	1			DECAL, Door Frame
21-22	5500 6804-5	1			DECAL, Door Frame
23-24	5500 6808-9	1			DECAL, Rear Quarter
25-26	5500 5208-9	1			DECAL, Hood
27	5500 5179	1			DECAL, Grille Panel
28	5500 6814	1			DECAL, Lift Door
29-30	5500 6810-1	1			DECAL, Lift Door
31	5500 6812	1			DECAL, Lift Door
32					DECAL, Lift Door
	5500 5210	1			1984-85: small letters
	5500 9782	1			1986: capital letters
33	5500 5211	1			DECAL, Lift Door
34-35	5500 6220-1	1			DECAL, Door
36	5500 7400	1			DECAL, "4x4 of The Year"

MODEL CODES

16=Cherokee 2 Dr.(1981-83)
17=Cherokee 2 Dr.(1981-83)
73=Cherokee 2WD-2 Dr.(1984-86)
74=Cherokee 2WD-4 Dr.(1984-86)
18=Cherokee 4 Dr.(1981-83)
77=Cherokee 4WD-2 Dr.(1984-86)
78=Cherokee 4WD-4 Dr.(1984-86)
85=CJ-5 (1981-83)
86=CJ-6(1981)
87=CJ-7(1981-86)
88=CJ-8, Scrambler(1981-86)
64=Comanche 2WD-6 Ft. Box(1986)
66=Comanche 2WD-7 Ft. Box(1986)
63=Comanche 4WD-6 Ft. Box(1986)
65=Comanche 4WD-7 Ft. Box(1986)
15=Grand Wagoneer 4 Dr.(1984-86)
25=J-10 Truck 7 Ft. Box(1981-84)
26=J10 Truck 8 Ft. Box(1981-86)
27=J-20 Truck 8 Ft. Box(1981-86)
15=Wagoneer 4 Dr.(1981-83)
75=Wagoneer 4WD-4 Dr.(1984-86)

BODY
CJ=CJ-5, CJ-6, CJ-7, CJ-8, Scrambler(1981-86)
MJ=Comanche Pickup(1986)

STYLES
SJ=Wagoneer(1981-83), Grand Wagoneer(1984-86), Cherokee(1981-83), J-10, J-20(1981-86)
XJ=Wagoneer(1984-86), Cherokee(1984-86)

AR = Use as Required - = Non Illustrated Part P.A.R. = Paint as Required

« RETURN TO GROUP INDEX

DECALS, EXTERIOR CHIEF, E.C.E., 1986 XJ CHEROKEE 4 DOOR
Figure 23-3800

81J68 3800

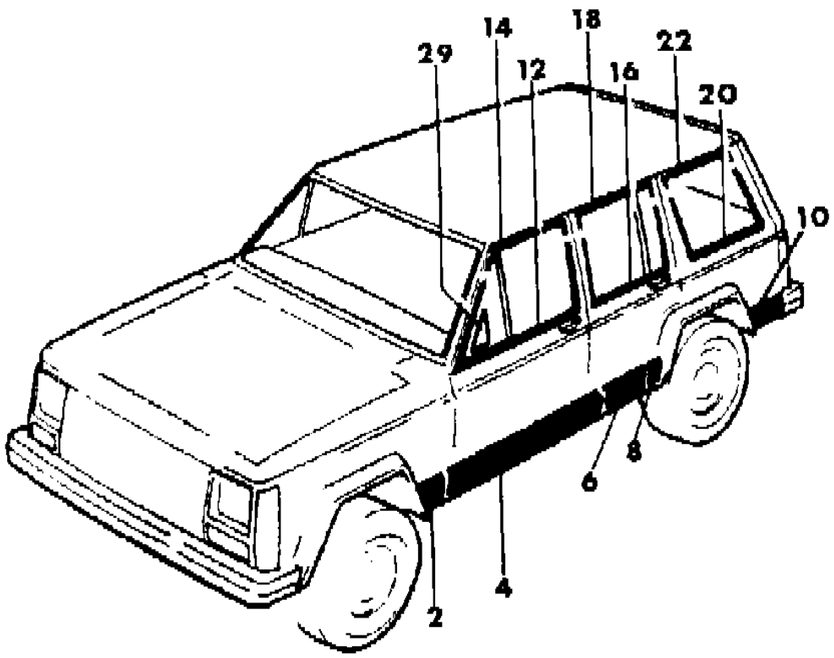

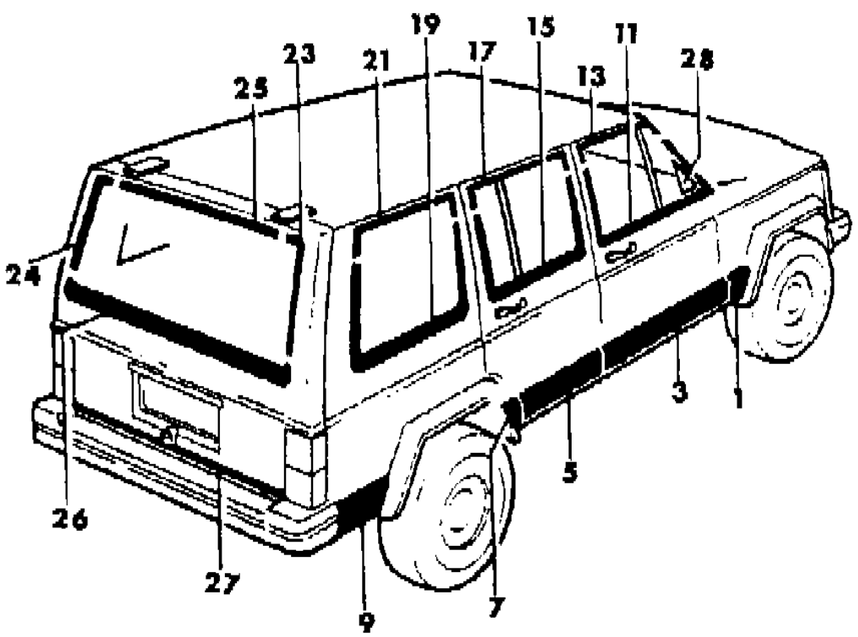

ITEM	PART NUMBER	QTY	BODY	MODEL	DESCRIPTION
1-2	5500 8192-3	1			DECAL, Fender, Black
3-4	5501 0696-7	1			DECAL, Door, Black
5-6	5501 0934-5	1			DECAL, Door, Black
7-8	5500 6794-5	1			DECAL, Rear Quarter, Black
9-10	5500 8198-9	1			DECAL, Rear Quarter, Black
11-12	5500 6798-9	1			DECAL, Door Frame, Black
13-14	5500 6800-1	1			DECAL, Door Frame, Black
15-16	5500 6802-3	1			DECAL, Door Frame, Black
17-18	5500 6804-5	1			DECAL, Door Frame, Black
19-20	5500 6806-7	1			DECAL, Rear Quarter, Black
21-22	5500 6808-9	1			DECAL, Rear Quarter, Black
23-24	5500 6810-1	1			DECAL, Lift Door, Black
25	5500 6814	1			DECAL, Lift Door, Black
26	5500 6812	1			DECAL, Lift Door, Black
27	5500 8200	1			DECAL, Lift Door, Black
28-29	5500 6220-1	1			DECAL, Door, Black

MODEL CODES
16=Cherokee 2 Dr.(1981-83)
17=Cherokee 2 Dr.(1981-83)
73=Cherokee 2WD-2 Dr.(1984-86)
74=Cherokee 2WD-4 Dr.(1984-86)
18=Cherokee 4 Dr.(1981-83)
77=Cherokee 4WD-2 Dr.(1984-86)
78=Cherokee 4WD-4 Dr.(1984-86)
85=CJ-5 (1981-83)
86=CJ-6(1981)
87=CJ-7(1981-86)
88=CJ-8, Scrambler(1981-86)
64=Comanche 2WD-6 Ft. Box(1986)
66=Comanche 2WD-7 Ft. Box(1986)
63=Comanche 4WD-6 Ft. Box(1986)
65=Comanche 4WD-7 Ft. Box(1986)
15=Grand Wagoneer 4 Dr.(1984-86)
25=J-10 Truck 7 Ft. Box(1981-84)
26=J10 Truck 8 Ft. Box(1981-86)
27=J-20 Truck 8 Ft. Box(1981-86)
15=Wagoneer 4 Dr.(1981-83)
75=Wagoneer 4WD-4 Dr.(1984-86)

BODY
CJ=CJ-5, CJ-6, CJ-7, CJ-8, Scrambler(1981-86)
MJ=Comanche Pickup(1986)

STYLES
SJ=Wagoneer(1981-83), Grand Wagoneer(1984-86), Cherokee(1981-83), J-10, J-20(1981-86)
XJ=Wagoneer(1984-86), Cherokee(1984-86)

AR = Use as Required - = Non Illustrated Part P.A.R. = Paint as Required

« RETURN TO GROUP INDEX

DECALS, EXTERIOR LAREDO, 1984-86 XJ CHEROKEE LAREDO
Figure 23-3900

81J68 3900

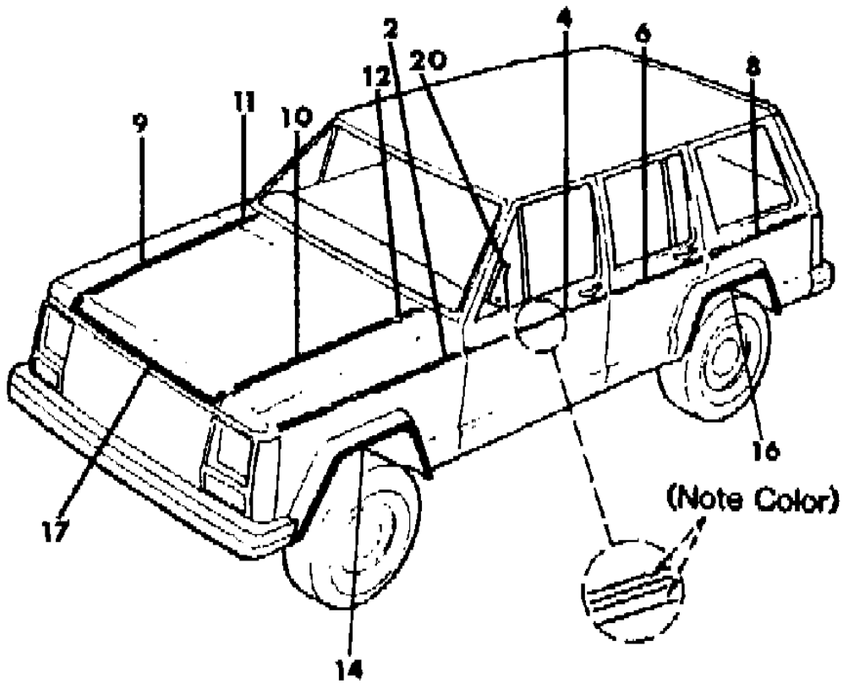

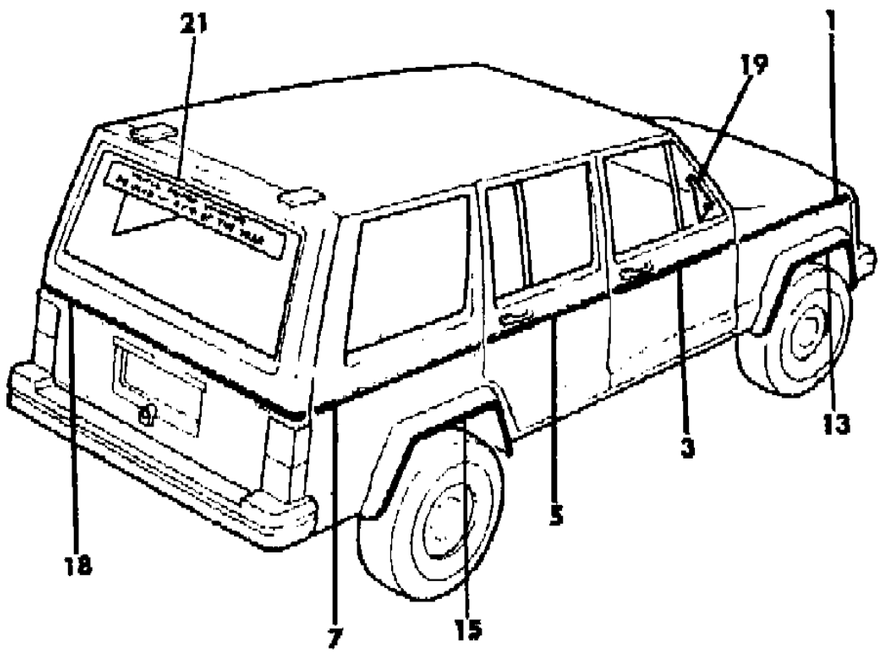

ITEM	PART NUMBER	QTY	BODY	MODEL	DESCRIPTION
1-2					DECAL, Fender
	5500 5972-3	1			Dark Red
	5500 5952-3	1			Gold
3-4					DECAL, Door
	5500 5974-5	1			Dark Red
	5500 5954-5	1			Gold
5-6					DECAL, Door
	5500 5976-7	1			Dark Red
	5500 5956-7	1			Gold
7-8					DECAL, Rear Quarter
	5500 5978-9	1			Dark Red
	5500 5958-9	1			Gold
9-10					DECAL, Hood
	5500 5968-9	1			Dark Red
	5500 5948-9	1			Gold
11-12					DECAL, Cowl
	5500 5970-1	1			Dark Red
	5500 5950-1	1			Gold
13-14					DECAL, Wheel Opening: 1985
	5500 7446-7	1			Dark Red
	5500 7458-9	1			Gold
15-16					DECAL, Wheel Opening: 1985
	5500 7448-9	1			Dark Red
	5500 7460-1	1			Gold
17					DECAL, Grille Panel
	5500 5966	1			Dark Red
	5500 5946	1			Gold
18					Decal, Lift Door ***
	5500 5967	1			Dark Red
	5500 5947	1			Gold
19-20	5500 6220-1	1			DECAL, Door, Black
21	5500 7400	1			DECAL, "4X4 of The Year"

MODEL CODES

16=Cherokee 2 Dr.(1981-83)	78=Cherokee 4WD-4 Dr.(1984-86)	64=Comanche 2WD-6 Ft. Box(1986)	25=J-10 Truck 7 Ft. Box(1981-84)
17=Cherokee 2 Dr.(1981-83)	85=CJ-5 (1981-83)	66=Comanche 2WD-7 Ft. Box(1986)	26=J10 Truck 8 Ft. Box(1981-86)
73=Cherokee 2WD-2 Dr.(1984-86)	86=CJ-6(1981)	63=Comanche 4WD-6 Ft. Box(1986)	27=J-20 Truck 8 Ft. Box(1981-86)
74=Cherokee 2WD-4 Dr.(1984-86)	87=CJ-7(1981-86)	65=Comanche 4WD-7 Ft. Box(1986)	15=Wagoneer 4 Dr.(1981-83)
18=Cherokee 4 Dr.(1981-83)	88=CJ-8, Scrambler(1981-86)	15=Grand Wagoneer 4 Dr.(1984-86)	75=Wagoneer 4WD-4 Dr.(1984-86)
77=Cherokee 4WD-2 Dr.(1984-86)			

BODY
CJ=CJ-5, CJ-6, CJ-7, CJ-8, Scrambler(1981-86)
MJ=Comanche Pickup(1986)

STYLES
SJ=Wagoneer(1981-83), Grand Wagoneer(1984-86), Cherokee(1981-83), J-10, J-20(1981-86)
XJ=Wagoneer(1984-86), Cherokee(1984-86)

AR = Use as Required - = Non Illustrated Part P.A.R. = Paint as Required

« RETURN TO GROUP INDEX

DECALS, EXTERIOR SPRING PROMOTION, 1984 CHEROKEE 4 DOOR
Figure 23-4000

81J68 4000

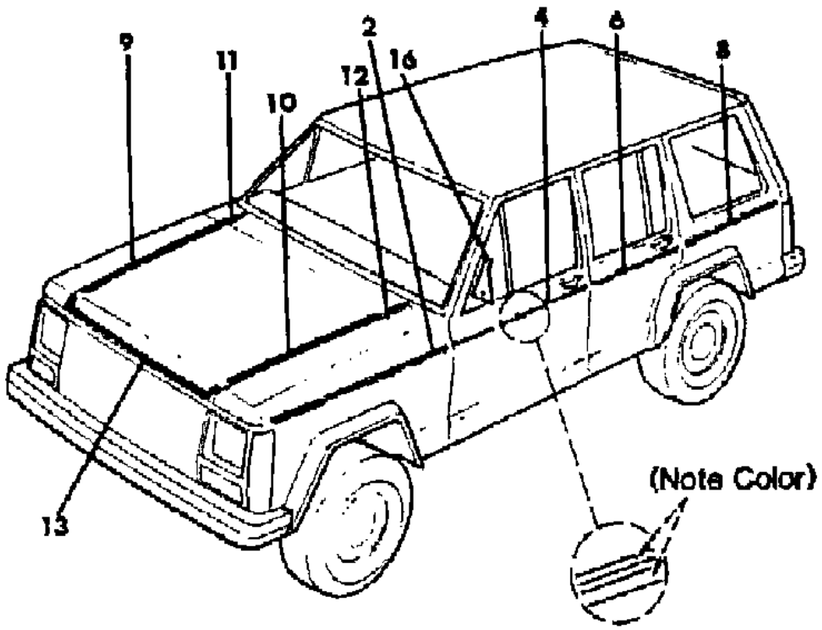

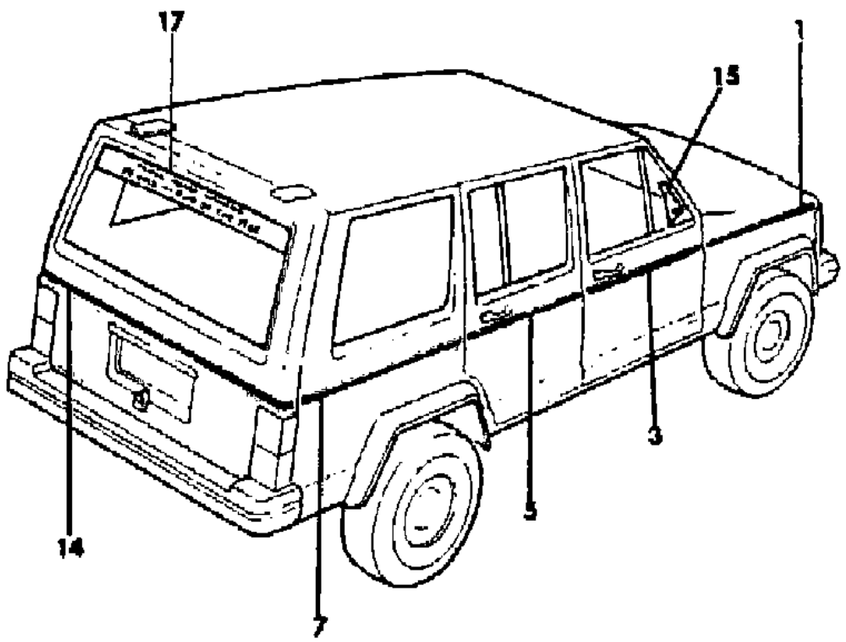

ITEM	PART NUMBER	QTY	BODY	MODEL	DESCRIPTION
1-2	5500 7426-7	1			DECAL, Fender, Red
3-4	5500 7430-1	1			DECAL, Door, Red
5-6	5500 7432-3	1			DECAL, Door, Red
7-8	5500 7434-5	1			DECAL, Rear Quarter, Red
9-10	5500 7422-3	1			DECAL, Hood, Red
11-12	5500 7424-5	1			DECAL, Cowl, Red
13	5500 7439	1			DECAL, Grille Panel, Red
14	5500 7438	1			DECAL, Lift Door, Red
15-16	5500 6220-1	1			DECAL, Door, Black
17	5500 7400	1			DECAL, "4X4 of The Year"

MODEL CODES

16=Cherokee 2 Dr.(1981-83)
17=Cherokee 2 Dr.(1981-83)
73=Cherokee 2WD-2 Dr.(1984-86)
74=Cherokee 2WD-4 Dr.(1984-86)
18=Cherokee 4 Dr.(1981-83)
77=Cherokee 4WD-2 Dr.(1984-86)
78=Cherokee 4WD-4 Dr.(1984-86)
85=CJ-5 (1981-83)
86=CJ-6(1981)
87=CJ-7(1981-86)
88=CJ-8, Scrambler(1981-86)
64=Comanche 2WD-6 Ft. Box(1986)
66=Comanche 2WD-7 Ft. Box(1986)
63=Comanche 4WD-6 Ft. Box(1986)
65=Comanche 4WD-7 Ft. Box(1986)
15=Grand Wagoneer 4 Dr.(1984-86)
25=J-10 Truck 7 Ft. Box(1981-84)
26=J10 Truck 8 Ft. Box(1981-86)
27=J-20 Truck 8 Ft. Box(1981-86)
15=Wagoneer 4 Dr.(1981-83)
75=Wagoneer 4WD-4 Dr.(1984-86)

BODY
CJ=CJ-5, CJ-6, CJ-7, CJ-8, Scrambler(1981-86)
MJ=Comanche Pickup(1986)

STYLES
SJ=Wagoneer(1981-83), Grand Wagoneer(1984-86), Cherokee(1981-83), J-10, J-20(1981-86)
XJ=Wagoneer(1984-86), Cherokee(1984-86)

AR = Use as Required - = Non Illustrated Part P.A.R. = Paint as Required

« RETURN TO GROUP INDEX

NAMEPLATES XJ CHEROKEE 2 DOOR
Figure 23-4100

81J68 4100

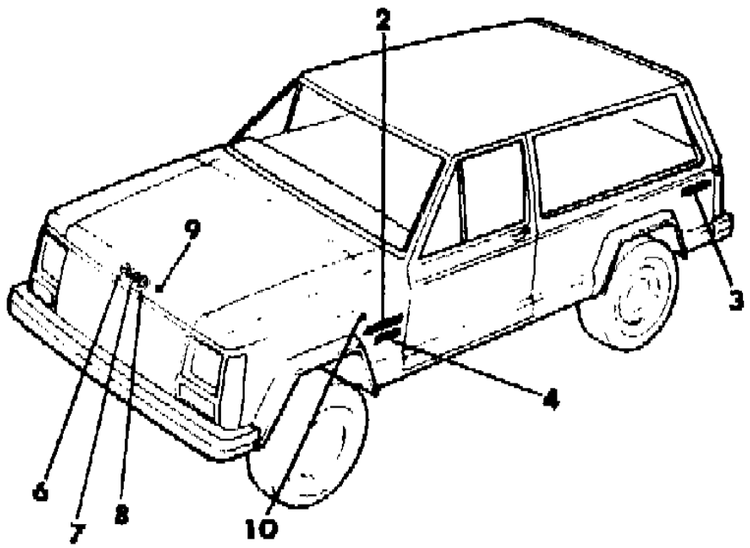

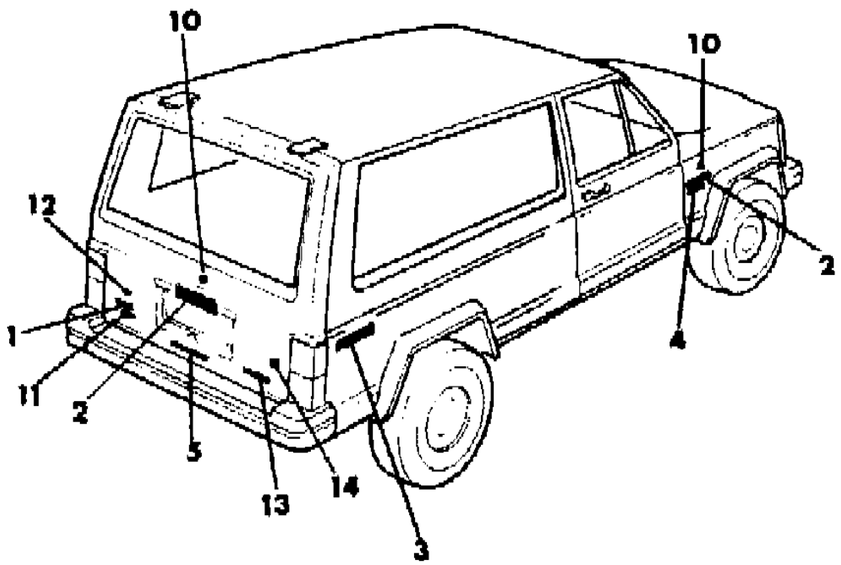

ITEM	PART NUMBER	QTY	BODY	MODEL	DESCRIPTION
1					NAMEPLATE
	5501 0893	1			2.5 Litre
	5500 5222	1			V6 2.8 L: 1984-85
	5501 0894	1			V6 2.8 L: 1986
	5500 6610	1			Turbo Diesel: 1985
	5501 0895	1			Turbo Diesel: 1986
2	5505 2503	AR			NAMEPLATE, Cherokee
3					NAMEPLATE
	5500 5712	2			Selec-Trac: 1984-85
	5501 0896	2			Selec-Trac: 1986
	5500 7817	2			4X4
	5500 5713	2			4 Wheel Drive
4					NAMEPLATE
	5505 2504	2			Pioneer: 1984-85
	5501 0898	2			Pioneer: 1986
	5500 3321	2			Laredo: 1985
	5501 0899	2			Laredo: 1986
5	5500 8340	1			NAMEPLATE, Jeep
6					NAMEPLATE
	5500 3324	1			J: 1984-85
	5501 0901	1			J: 1986
7					NAMEPLATE
	5500 3325	2			e: 1984-85
	5501 0902	2			e: 1986
8					NAMEPLATE
	5500 3326	1			p: 1984-85
	5501 0903	1			p: 1986
9	1150 2557	4			NUT
10	J400 1335	AR			CLIP
11	5500 8338	1			NAMEPLATE, Fuel Injection
12	J400 3657	2			CLIP
13	5500 8339	1			NAMEPLATE, Command Trac
14	J400 3656	AR			CLIP

MODEL CODES

16=Cherokee 2 Dr.(1981-83)	78=Cherokee 4WD-4 Dr.(1984-86)	64=Comanche 2WD-6 Ft. Box(1986)	25=J-10 Truck 7 Ft. Box(1981-84)
17=Cherokee 2 Dr.(1981-83)	85=CJ-5 (1981-83)	66=Comanche 2WD-7 Ft. Box(1986)	26=J10 Truck 8 Ft. Box(1981-86)
73=Cherokee 2WD-2 Dr.(1984-86)	86=CJ-6(1981)	63=Comanche 4WD-6 Ft. Box(1986)	27=J-20 Truck 8 Ft. Box(1981-86)
74=Cherokee 2WD-4 Dr.(1984-86)	87=CJ-7(1981-86)	65=Comanche 4WD-7 Ft. Box(1986)	15=Wagoneer 4 Dr.(1981-83)
18=Cherokee 4 Dr.(1981-83)	88=CJ-8, Scrambler(1981-86)	15=Grand Wagoneer 4 Dr.(1984-86)	75=Wagoneer 4WD-4 Dr.(1984-86)
77=Cherokee 4WD-2 Dr.(1984-86)			

BODY
CJ=CJ-5, CJ-6, CJ-7, CJ-8, Scrambler(1981-86)
MJ=Comanche Pickup(1986)

STYLES
SJ=Wagoneer(1981-83), Grand Wagoneer(1984-86), Cherokee(1981-83), J-10, J-20(1981-86)
XJ=Wagoneer(1984-86), Cherokee(1984-86)

AR = Use as Required - = Non Illustrated Part P.A.R. = Paint as Required

« RETURN TO GROUP INDEX

MOULDINGS, EXTERIOR, UPPER XJ CHEROKEE 2 DOOR
Figure 23-4200

81J68 4200

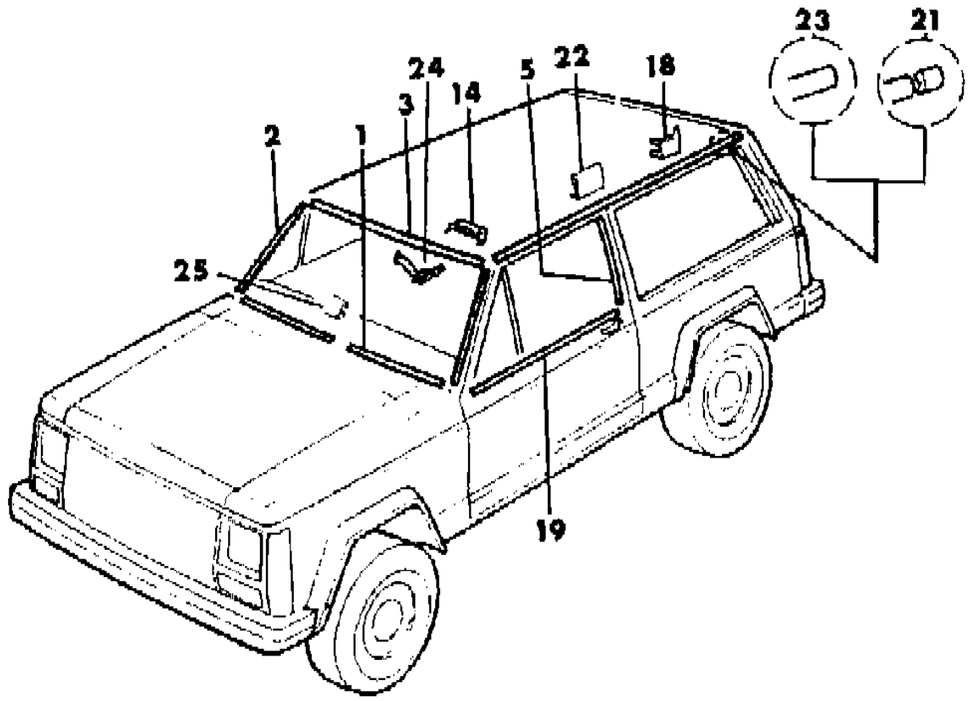

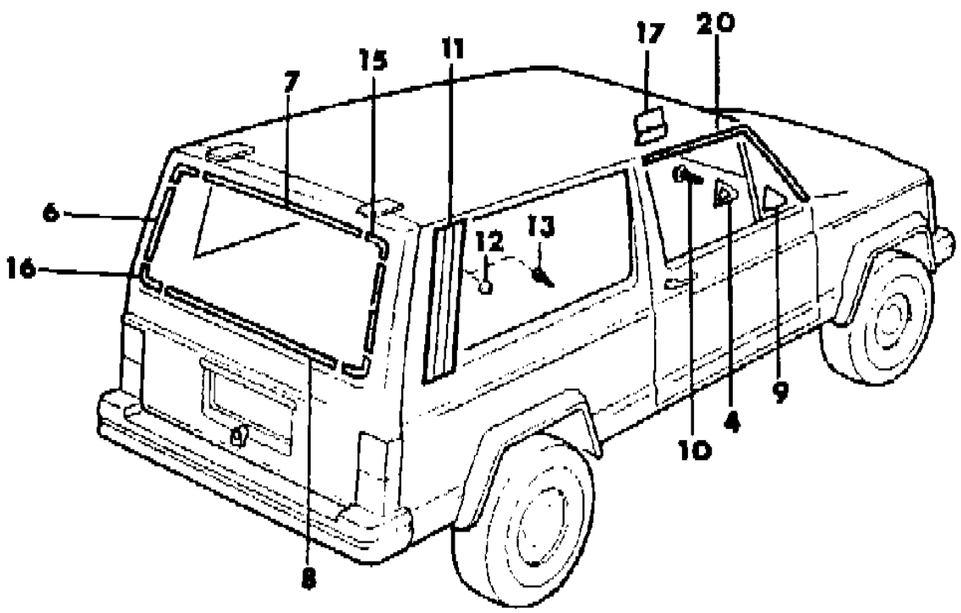

ITEM	PART NUMBER	QTY	BODY	MODEL	DESCRIPTION
1					MOULDING, Windshield, P.A.R.
	5500 6380	1			Right
	5500 2509	1			Left
2	5500 0546-7	1			MOULDING, Windshield, P.A.R.
3	5500 0544	1			MOULDING, Windshield
4	5500 5430-1	1			GASKET
5	5500 5282-3	1			MOULDING, Door
6	5500 5308	2			MOULDING, Lift Door
7	5500 5331	1			MOULDING, Lift Door
8	5500 5332	1			MOULDING, Lift Door
9	5500 5312-3	1			COVER, used in place of mirror
10	3420 1957	4			SCREW
11	5500 4460-1	1			APPLIQUE, Rear Quarter, P.A.R.
12	1150 1854	AR			NUT
13	3420 2426	6			SCREW
14	J400 6211	26			CLIP
15	5500 5333	2			CAP, Moulding, Upper
16	5500 5334	2			CAP, Moulding, Lower
17	5500 5384	2			CLIP
18	J400 6530	6			RETAINER
19	5500 5286-7	1			MOULDING, Door
20	5500 5280-1	1			MOULDING, Door
21	5501 3656-7	1			MOULDING, Drip, 1986: P.A.R.
22	3500 2115	AR			CLIP
23	5500 0548-9	1			MOULDING, Drip, P.A.R
24	5500 2605	26			CLIP
25	5500 6386	1			COVER, Clip, P.A.R.

MODEL CODES

16=Cherokee 2 Dr.(1981-83)
17=Cherokee 2 Dr.(1981-83)
73=Cherokee 2WD-2 Dr.(1984-86)
74=Cherokee 2WD-4 Dr.(1984-86)
18=Cherokee 4 Dr.(1981-83)
77=Cherokee 4WD-2 Dr.(1984-86)
78=Cherokee 4WD-4 Dr.(1984-86)
85=CJ-5 (1981-83)
86=CJ-6(1981)
87=CJ-7(1981-86)
88=CJ-8, Scrambler(1981-86)
64=Comanche 2WD-6 Ft. Box(1986)
66=Comanche 2WD-7 Ft. Box(1986)
63=Comanche 4WD-6 Ft. Box(1986)
65=Comanche 4WD-7 Ft. Box(1986)
15=Grand Wagoneer 4 Dr.(1984-86)
25=J-10 Truck 7 Ft. Box(1981-84)
26=J10 Truck 8 Ft. Box(1981-86)
27=J-20 Truck 8 Ft. Box(1981-86)
15=Wagoneer 4 Dr.(1981-83)
75=Wagoneer 4WD-4 Dr.(1984-86)

BODY
CJ=CJ-5, CJ-6, CJ-7, CJ-8, Scrambler(1981-86)
MJ=Comanche Pickup(1986)

STYLES
SJ=Wagoneer(1981-83), Grand Wagoneer(1984-86), Cherokee(1981-83), J-10, J-20(1981-86)
XJ=Wagoneer(1984-86), Cherokee(1984-86)

AR = Use as Required - = Non Illustrated Part P.A.R. = Paint as Required

« RETURN TO GROUP INDEX

MOULDINGS, EXTERIOR, LOWER XJ, CHEROKEE 2 DOOR
Figure 23-4300

81J68 4300

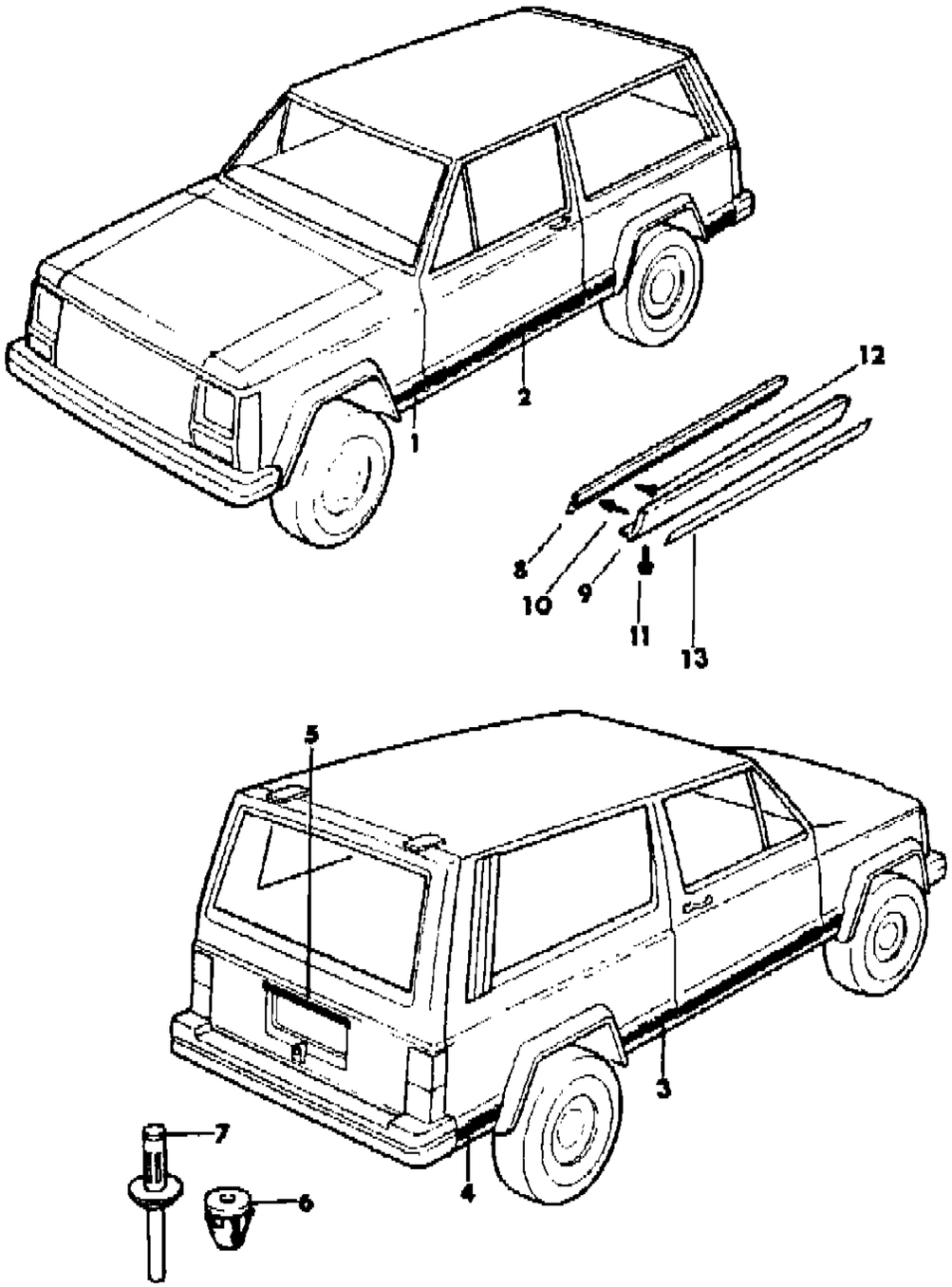

ITEM	PART NUMBER	QTY	BODY	MODEL	DESCRIPTION
1					MOULDING, Fender
	5500 3166-7	1			Black/Chrome
	5500 3048-9	1			Black
2					MOULDING, Door
	5500 7396-7	1			Black/Chrome
	5500 3044-5	1			Black
3					MOULDING, Rear Quarter
	5500 7398-9	1			Black/Chrome
	5500 3046-7	1			Black
4					MOULDING, Rear Quarter
	5500 3172-3	1			Black/Chrome
	5500 3042-3	1			Black
5	5501 3411	1			OVERLAY, License Plate
6	J400 1335	AR			CLIP
7	3420 2204	2			RIVET
8	5500 5409	2			RETAINER
9	5500 5518	2			APPLIQUE, Rocker Panel
10	J400 2185	12			RIVET
11	3420 1984	14			SCREW
12	3420 1292	2			SCREW
13	5505 2524	2			FILM, Abrasion Resistant ***

MODEL CODES

16=Cherokee 2 Dr.(1981-83)
17=Cherokee 2 Dr.(1981-83)
73=Cherokee 2WD-2 Dr.(1984-86)
74=Cherokee 2WD-4 Dr.(1984-86)
18=Cherokee 4 Dr.(1981-83)
77=Cherokee 4WD-2 Dr.(1984-86)
78=Cherokee 4WD-4 Dr.(1984-86)
85=CJ-5 (1981-83)
86=CJ-6(1981)
87=CJ-7(1981-86)
88=CJ-8, Scrambler(1981-86)
64=Comanche 2WD-6 Ft. Box(1986)
66=Comanche 2WD-7 Ft. Box(1986)
63=Comanche 4WD-6 Ft. Box(1986)
65=Comanche 4WD-7 Ft. Box(1986)
15=Grand Wagoneer 4 Dr.(1984-86)
25=J-10 Truck 7 Ft. Box(1981-84)
26=J10 Truck 8 Ft. Box(1981-86)
27=J-20 Truck 8 Ft. Box(1981-86)
15=Wagoneer 4 Dr.(1981-83)
75=Wagoneer 4WD-4 Dr.(1984-86)

BODY
CJ=CJ-5, CJ-6, CJ-7, CJ-8, Scrambler(1981-86)
MJ=Comanche Pickup(1986)

STYLES
SJ=Wagoneer(1981-83), Grand Wagoneer(1984-86), Cherokee(1981-83), J-10, J-20(1981-86)
XJ=Wagoneer(1984-86), Cherokee(1984-86)

AR = Use as Required - = Non Illustrated Part P.A.R. = Paint as Required

« RETURN TO GROUP INDEX

DECALS, EXTERIOR PIONEER, 1984-85 XJ CHEROKEE 2 DOOR
Figure 23-4400

81J68 4400

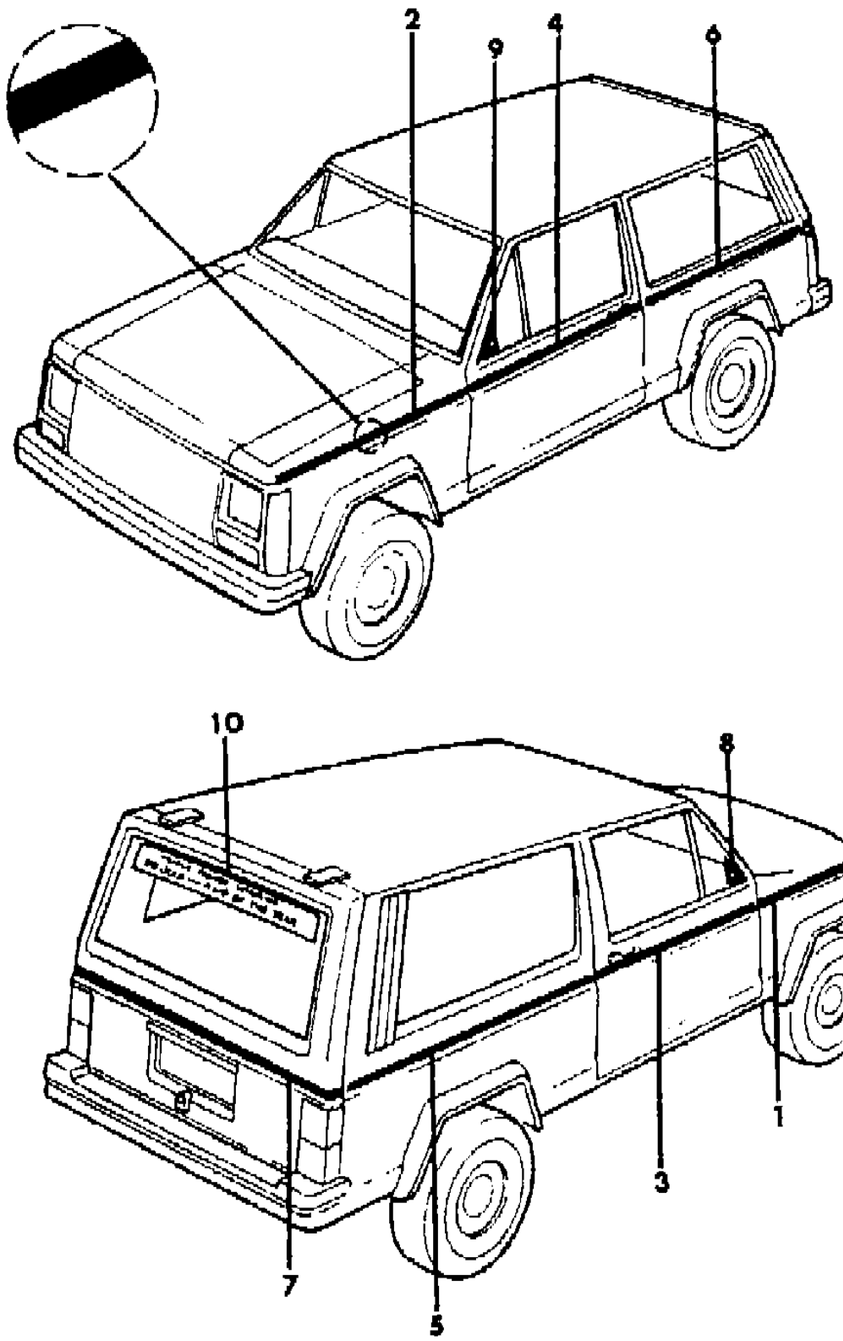

ITEM	PART NUMBER	QTY	BODY	MODEL	DESCRIPTION
1-2	5500 5424	2			DECAL, Fender, Red, Modification Required
3-4	5500 5424	2			DECAL, Door, Red, Modification Required
5-6	5500 5424	2			DECAL, Rear Quarter, Red, Modification Required
7	5500 5424	1			DECAL, Lift Door
8-9	5500 6220-1	1			DECAL, Door, Black
10	5500 7400	1			DECAL, "4X4 of The Year"

MODEL CODES

16=Cherokee 2 Dr.(1981-83)
17=Cherokee 2 Dr.(1981-83)
73=Cherokee 2WD-2 Dr.(1984-86)
74=Cherokee 2WD-4 Dr.(1984-86)
18=Cherokee 4 Dr.(1981-83)
77=Cherokee 4WD-2 Dr.(1984-86)
78=Cherokee 4WD-4 Dr.(1984-86)
85=CJ-5 (1981-83)
86=CJ-6(1981)
87=CJ-7(1981-86)
88=CJ-8, Scrambler(1981-86)
64=Comanche 2WD-6 Ft. Box(1986)
66=Comanche 2WD-7 Ft. Box(1986)
63=Comanche 4WD-6 Ft. Box(1986)
65=Comanche 4WD-7 Ft. Box(1986)
15=Grand Wagoneer 4 Dr.(1984-86)
25=J-10 Truck 7 Ft. Box(1981-84)
26=J10 Truck 8 Ft. Box(1981-86)
27=J-20 Truck 8 Ft. Box(1981-86)
15=Wagoneer 4 Dr.(1981-83)
75=Wagoneer 4WD-4 Dr.(1984-86)

BODY
CJ=CJ-5, CJ-6, CJ-7, CJ-8, Scrambler(1981-86)
MJ=Comanche Pickup(1986)

STYLES
SJ=Wagoneer(1981-83), Grand Wagoneer(1984-86), Cherokee(1981-83), J-10, J-20(1981-86)
XJ=Wagoneer(1984-86), Cherokee(1984-86)

AR = Use as Required - = Non Illustrated Part P.A.R. = Paint as Required

« RETURN TO GROUP INDEX

DECALS, EXTERIOR PIONEER, 1986 XJ CHEROKEE 2 DOOR
Figure 23-4500

81J68 4500

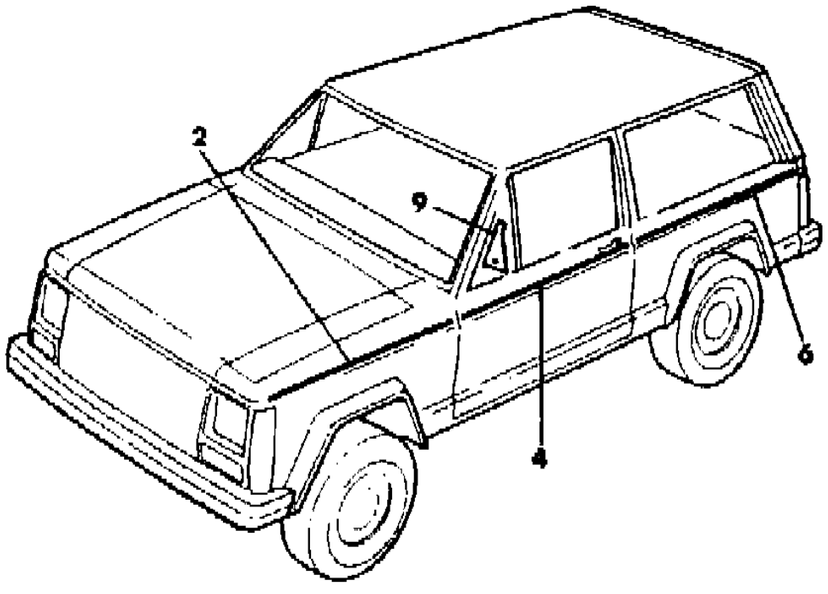

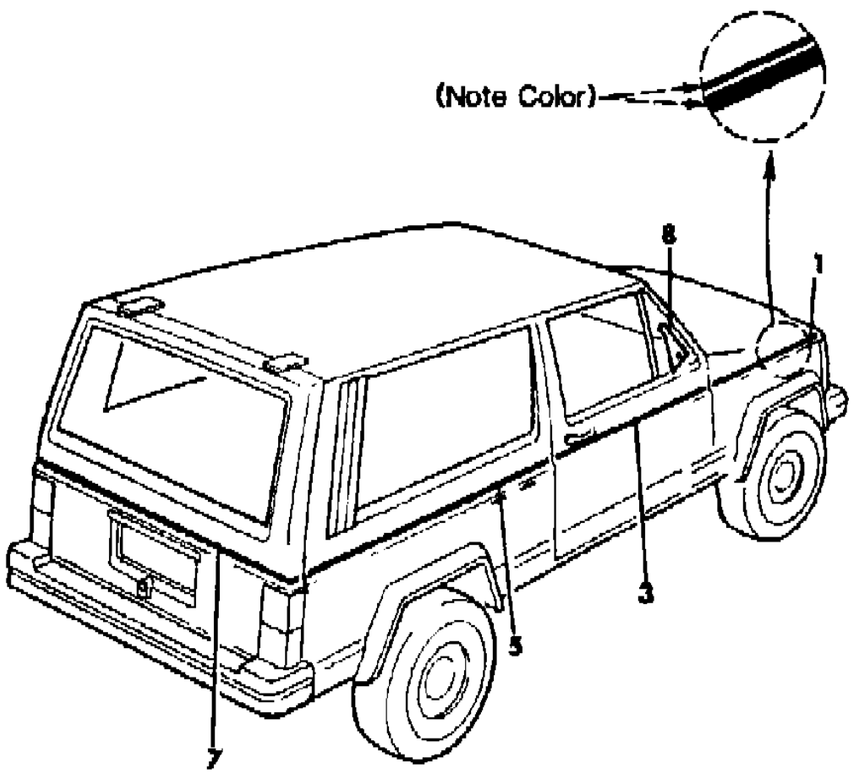

ITEM	PART NUMBER	QTY	BODY	MODEL	DESCRIPTION
1-2					DECAL, Fender
	5501 0088-9	1			Light Blue/Medium Blue
	5501 0094-5	1			Orange/Red
3-4					DECAL, Door
	5501 0090-1	1			Light Blue/Medium Blue
	5501 0102-3	1			Orange/Red
5-6					DECAL, Rear Quarter
	5501 0092-3	1			Light Blue/Medium Blue
	5501 0104-5	1			Orange/Red
7					DECAL, Lift Door
	5501 0087	1			Light Blue
	5501 0112	1			Orange, Red
8-9	5500 6220-1	1			DECAL, Door, Black

MODEL CODES

16=Cherokee 2 Dr.(1981-83)
17=Cherokee 2 Dr.(1981-83)
73=Cherokee 2WD-2 Dr.(1984-86)
74=Cherokee 2WD-4 Dr.(1984-86)
18=Cherokee 4 Dr.(1981-83)
77=Cherokee 4WD-2 Dr.(1984-86)
78=Cherokee 4WD-4 Dr.(1984-86)
85=CJ-5 (1981-83)
86=CJ-6(1981)
87=CJ-7(1981-86)
88=CJ-8, Scrambler(1981-86)
64=Comanche 2WD-6 Ft. Box(1986)
66=Comanche 2WD-7 Ft. Box(1986)
63=Comanche 4WD-6 Ft. Box(1986)
65=Comanche 4WD-7 Ft. Box(1986)
15=Grand Wagoneer 4 Dr.(1984-86)
25=J-10 Truck 7 Ft. Box(1981-84)
26=J10 Truck 8 Ft. Box(1981-86)
27=J-20 Truck 8 Ft. Box(1981-86)
15=Wagoneer 4 Dr.(1981-83)
75=Wagoneer 4WD-4 Dr.(1984-86)

BODY
CJ=CJ-5, CJ-6, CJ-7, CJ-8, Scrambler(1981-86)
MJ=Comanche Pickup(1986)

STYLES
SJ=Wagoneer(1981-83), Grand Wagoneer(1984-86), Cherokee(1981-83), J-10, J-20(1981-86)
XJ=Wagoneer(1984-86), Cherokee(1984-86)

AR = Use as Required - = Non Illustrated Part P.A.R. = Paint as Required

« RETURN TO GROUP INDEX

DECALS, EXTERIOR 2 TONE, 1985 XJ CHEROKEE 2 DOOR
Figure 23-4600

81J68 4600

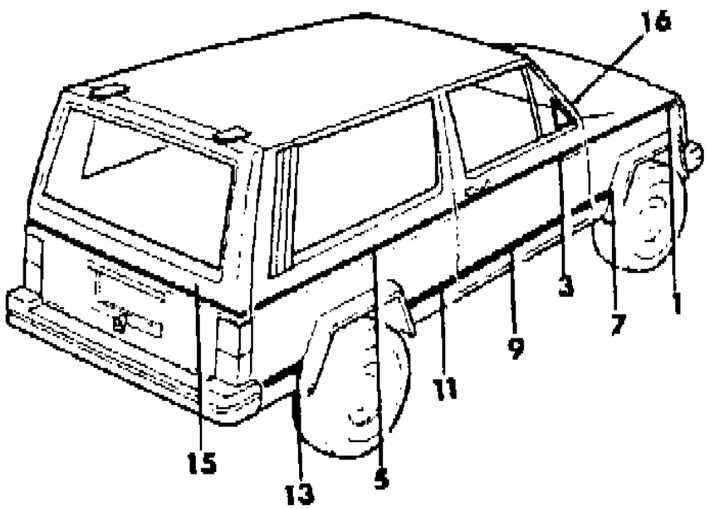

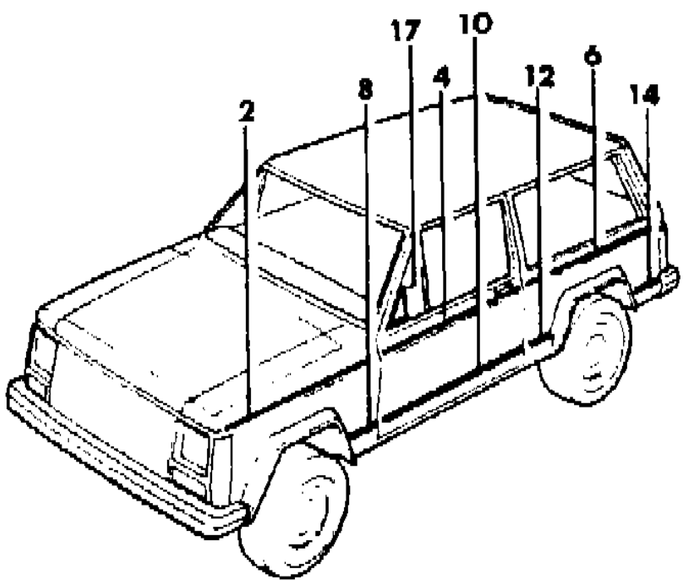

ITEM	PART NUMBER	QTY	BODY	MODEL	DESCRIPTION
1-2					DECAL, Fender
	5501 0812-3	1			Almond
	5501 0784-5	1			Ice Blue
	5501 0798-9	1			Dark Silver
3-4					DECAL, Door
	5501 0814-5	1			Almond
	5501 0786-7	1			Ice Blue
	5501 0800-1	1			Dark Silver
5-6					DECAL, Rear Quarter
	5501 0816-7	1			Almond
	5501 0788-9	1			Ice Blue
	5501 0802-3	1			Dark Silver
7-8					DECAL, Fender
	5501 0806-7	1			Almond
	5501 0778-9	1			Ice Blue
	5501 0792-3	1			Dark Silver
9-10					DECAL, Door
	5501 0820	2			Almond
	5501 0790	2			Ice Blue
	5501 0804	2			Dark Silver
11-12					Decal, Rear Quarter ***
	5501 0808-9	1			Almond
	5501 0780-1	1			Ice Blue
	5501 0794-5	1			Dark Silver
13-14					DECAL, Rear Quarter
	5501 0810-1	1			Almond
	5501 0782-3	1			Ice Blue
	5501 0796-7	1			Dark Silver
15					DECAL, Lift Door
	5501 0818	1			Almond
	5501 0777	1			Ice Blue
	5501 0805	1			Dark Silver
16-17	5500 6220-1	1			DECAL, Door, Black

MODEL CODES
16=Cherokee 2 Dr.(1981-83)
17=Cherokee 2 Dr.(1981-83)
73=Cherokee 2WD-2 Dr.(1984-86)
74=Cherokee 2WD-4 Dr.(1984-86)
18=Cherokee 4 Dr.(1981-83)
77=Cherokee 4WD-2 Dr.(1984-86)
78=Cherokee 4WD-4 Dr.(1984-86)
85=CJ-5 (1981-83)
86=CJ-6(1981)
87=CJ-7(1981-86)
88=CJ-8, Scrambler(1981-86)
64=Comanche 2WD-6 Ft. Box(1986)
66=Comanche 2WD-7 Ft. Box(1986)
63=Comanche 4WD-6 Ft. Box(1986)
65=Comanche 4WD-7 Ft. Box(1986)
15=Grand Wagoneer 4 Dr.(1984-86)
25=J-10 Truck 7 Ft. Box(1981-84)
26=J10 Truck 8 Ft. Box(1981-86)
27=J-20 Truck 8 Ft. Box(1981-86)
15=Wagoneer 4 Dr.(1981-83)
75=Wagoneer 4WD-4 Dr.(1984-86)

BODY
CJ=CJ-5, CJ-6, CJ-7, CJ-8, Scrambler(1981-86)
MJ=Comanche Pickup(1986)

STYLES
SJ=Wagoneer(1981-83), Grand Wagoneer(1984-86), Cherokee(1981-83), J-10, J-20(1981-86)
XJ=Wagoneer(1984-86), Cherokee(1984-86)

AR = Use as Required - = Non Illustrated Part P.A.R. = Paint as Required

« RETURN TO GROUP INDEX

DECALS, EXTERIOR 2 TONE, 1986 XJ CHEROKEE 2 DOOR
Figure 23-4700

81J68 4700

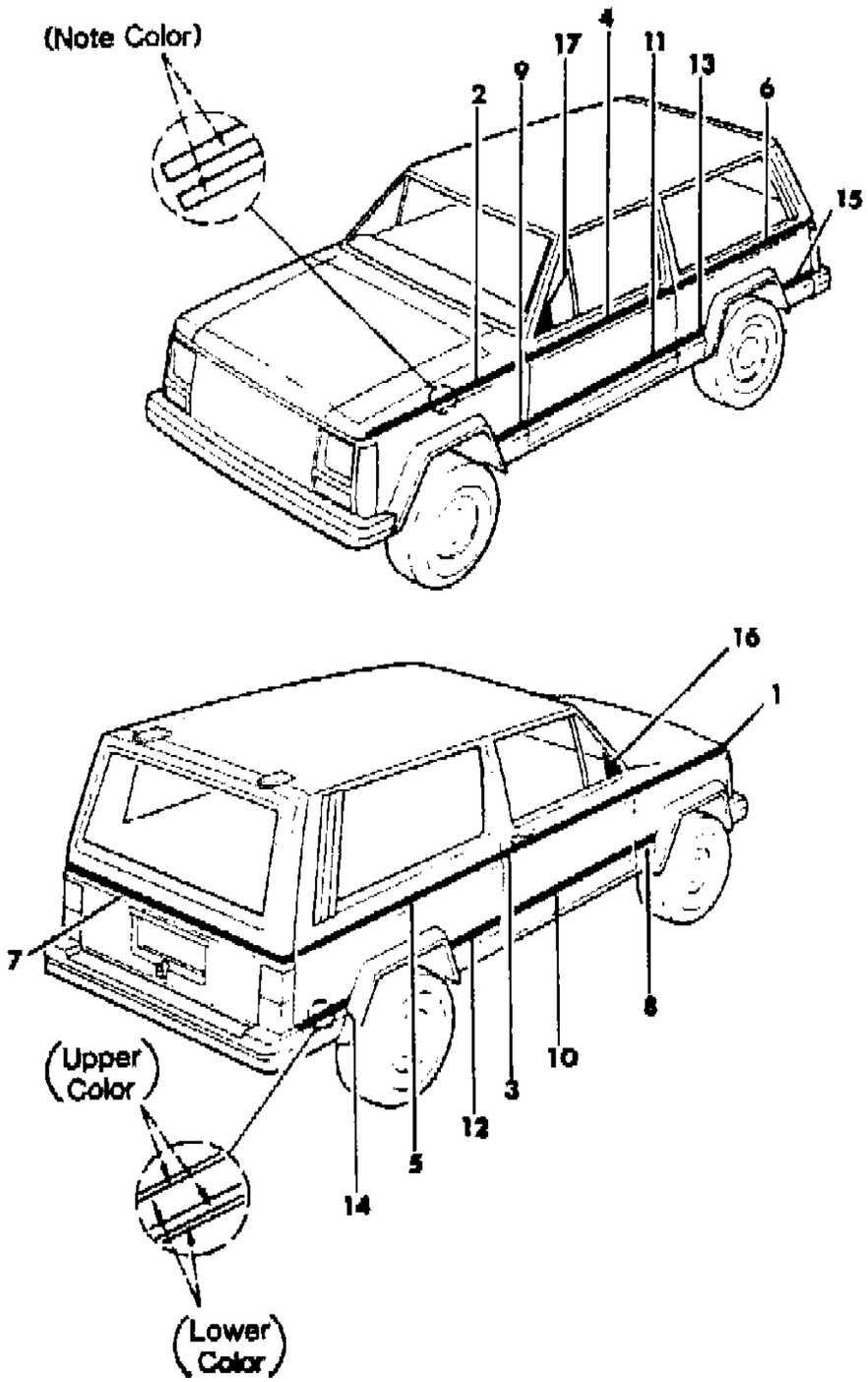

ITEM	PART NUMBER	QTY	BODY	MODEL	DESCRIPTION
1-2					DECAL, Fender
	5501 2854-5	1			Dark Honey
	5501 4252-3	1			Garnet
	5501 4134-5	1			Beige
	5501 2858-9	1			Charcoal
3-4					DECAL, Door
	5501 2860-1	1			Dark Honey
	5501 4254-5	1			Garnet
	5501 4136-7	1			Beige
	5501 2864-5	1			Charcoal
5-6					DECAL, Rear Quarter
	5501 2892-3	1			Dark Honey
	5501 4256-7	1			Garnet
	5501 4240-1	1			Beige
	5501 2896-7	1			Charcoal
7					DECAL, Lift Door
	5501 2889	1			Dark Honey
	5501 4258	1			Garnet
	5501 4242	1			Beige
	5501 2891	1			Charcoal
8-9					DECAL, Fender
	5501 2614-5	1			Beige/Dark Honey/Beige/Dark Honey
	5501 4246-7	1			Black/Garnet/Black/Garnet
	5501 4200-1	1			Dark Blue/Beige/Dark Blue/Beige
	5501 2618-9	1			Sterling/Charcoal/Sterling/Charcoal
10-11					DECAL, Door
	5501 2606-7	1			Beige/Dark Honey/Beige/Dark Honey
	5501 4244-5	1			Black/Garnet/Black/Garnet
	5501 4228-9	1			Dark Blue/Beige/Dark Blue/Beige
	5501 2610-1	1			Sterling/Charcoal/Sterling/Charcoal
12-13					DECAL, Rear Quarter
	5501 2800-1	1			Beige/Dark Honey/Beige/Dark Honey
	5501 4250-1	1			Black/Garnet/Black/Garnet
	5501 4234-5	1			Dark Blue/Beige/Dark Blue/Beige
	5501 2804-5	1			Sterling/Charcoal/Sterling/Charcoal
14-15					DECAL, Rear Quarter
	5501 2792-3	1			Beige/Dark Honey/Beige/Dark Honey
	5501 4248-9	1			Black/Garnet/Black/Garnet
	5501 4232-3	1			Dark Blue/Beige/Dark Blue/Beige

MODEL CODES

16=Cherokee 2 Dr.(1981-83)
17=Cherokee 2 Dr.(1981-83)
73=Cherokee 2WD-2 Dr.(1984-86)
74=Cherokee 2WD-4 Dr.(1984-86)
18=Cherokee 4 Dr.(1981-83)
77=Cherokee 4WD-2 Dr.(1984-86)
78=Cherokee 4WD-4 Dr.(1984-86)
85=CJ-5 (1981-83)
86=CJ-6(1981)
87=CJ-7(1981-86)
88=CJ-8, Scrambler(1981-86)
64=Comanche 2WD-6 Ft. Box(1986)
66=Comanche 2WD-7 Ft. Box(1986)
63=Comanche 4WD-6 Ft. Box(1986)
65=Comanche 4WD-7 Ft. Box(1986)
15=Grand Wagoneer 4 Dr.(1984-86)
25=J-10 Truck 7 Ft. Box(1981-84)
26=J10 Truck 8 Ft. Box(1981-86)
27=J-20 Truck 8 Ft. Box(1981-86)
15=Wagoneer 4 Dr.(1981-83)
75=Wagoneer 4WD-4 Dr.(1984-86)

BODY
CJ=CJ-5, CJ-6, CJ-7, CJ-8, Scrambler(1981-86)
MJ=Comanche Pickup(1986)

STYLES
SJ=Wagoneer(1981-83), Grand Wagoneer(1984-86), Cherokee(1981-83), J-10, J-20(1981-86)
XJ=Wagoneer(1984-86), Cherokee(1984-86)

AR = Use as Required - = Non Illustrated Part P.A.R. = Paint as Required

DECALS, EXTERIOR 2 TONE, 1986 XJ CHEROKEE 2 DOOR
Figure 23-4700

81J68 4700

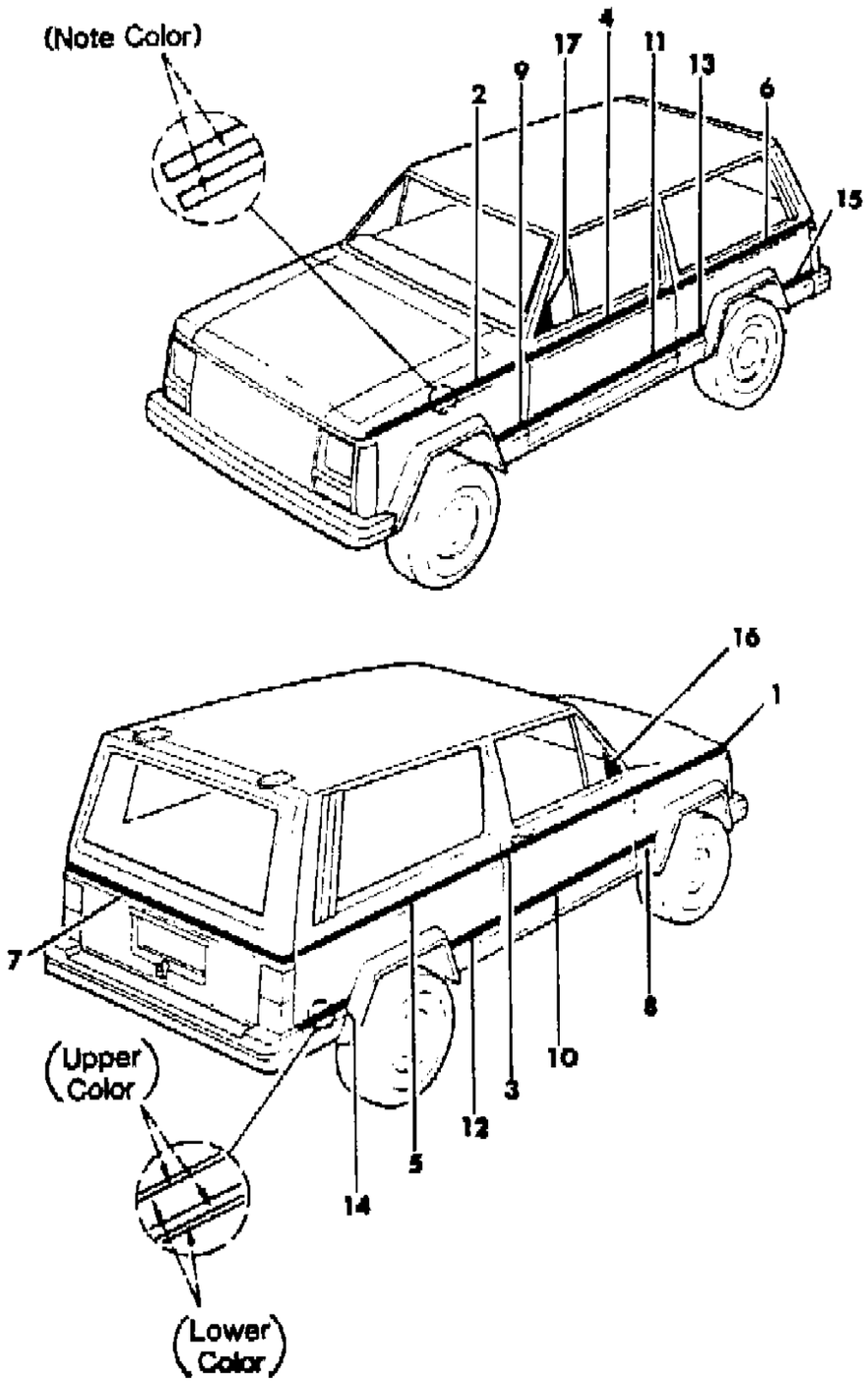

ITEM	PART NUMBER	QTY	BODY	MODEL	DESCRIPTION
	5501 2796-7	1			Sterling/Charcoal/Sterling/Charcoal
16-17	5500 6220-1	1			DECAL, Door, Black

MODEL CODES

16=Cherokee 2 Dr.(1981-83)
17=Cherokee 2 Dr.(1981-83)
73=Cherokee 2WD-2 Dr.(1984-86)
74=Cherokee 2WD-4 Dr.(1984-86)
18=Cherokee 4 Dr.(1981-83)
77=Cherokee 4WD-2 Dr.(1984-86)
78=Cherokee 4WD-4 Dr.(1984-86)
85=CJ-5 (1981-83)
86=CJ-6(1981)
87=CJ-7(1981-86)
88=CJ-8, Scrambler(1981-86)
64=Comanche 2WD-6 Ft. Box(1986)
66=Comanche 2WD-7 Ft. Box(1986)
63=Comanche 4WD-6 Ft. Box(1986)
65=Comanche 4WD-7 Ft. Box(1986)
15=Grand Wagoneer 4 Dr.(1984-86)
25=J-10 Truck 7 Ft. Box(1981-84)
26=J10 Truck 8 Ft. Box(1981-86)
27=J-20 Truck 8 Ft. Box(1981-86)
15=Wagoneer 4 Dr.(1981-83)
75=Wagoneer 4WD-4 Dr.(1984-86)

BODY
CJ=CJ-5, CJ-6, CJ-7, CJ-8, Scrambler(1981-86)
MJ=Comanche Pickup(1986)

STYLES
SJ=Wagoneer(1981-83), Grand Wagoneer(1984-86), Cherokee(1981-83), J-10, J-20(1981-86)
XJ=Wagoneer(1984-86), Cherokee(1984-86)

AR = Use as Required - = Non Illustrated Part P.A.R. = Paint as Required

« RETURN TO GROUP INDEX

DECALS, EXTERIOR CHIEF, TYPE 1, 1984 XJ CHEROKEE 2 DOOR
Figure 23-4800

81J68 4800

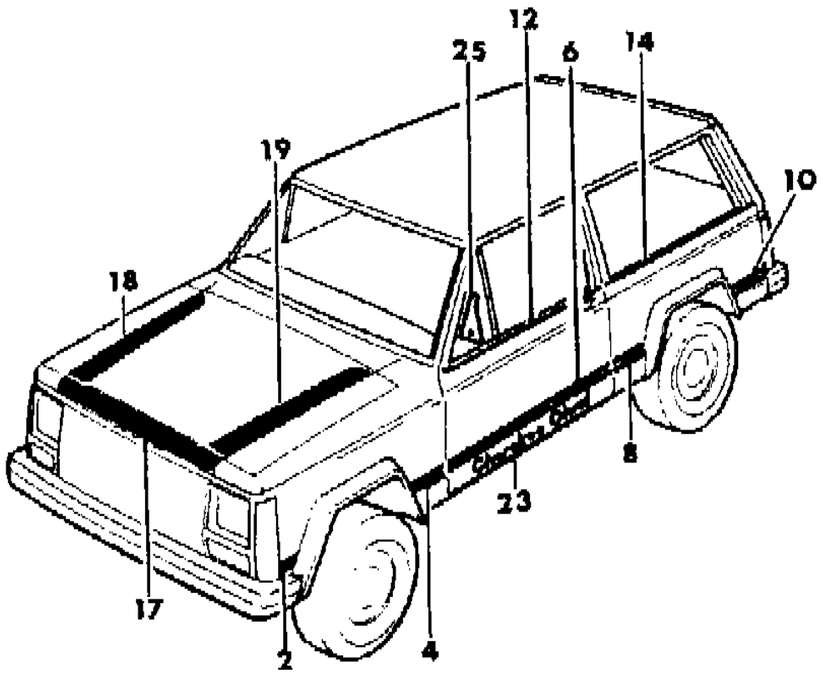

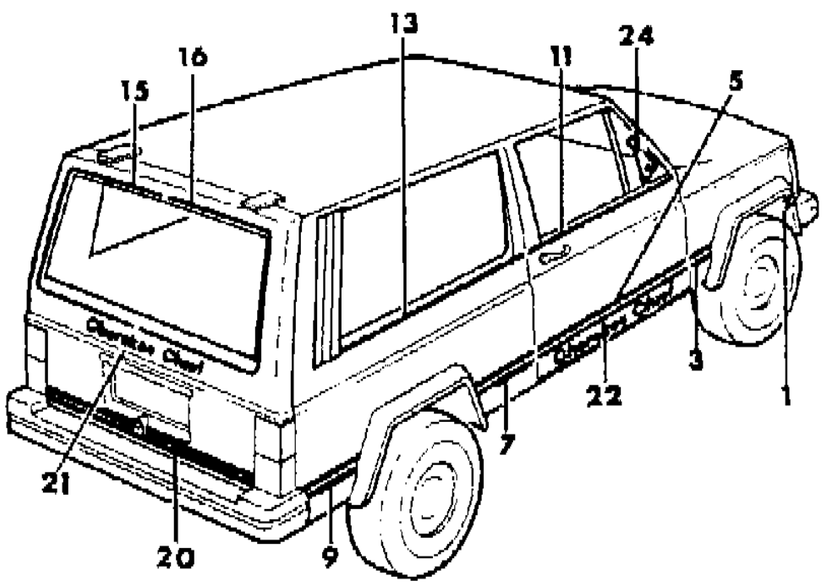

ITEM	PART NUMBER	QTY	BODY	MODEL	DESCRIPTION
1-2	5500 5180-1	1			DECAL, Fender
3-4	5500 5182-3	1			DECAL, Fender
5-6	5500 5186-7	1			DECAL, Door
7-8	5500 5190-1	1			Decal, Rear Quarter ***
9-10	5500 5192-3	1			DECAL, Rear Quarter
11-12	5500 5196-7	1			DECAL, Door
13-14	5500 5200-1	1			DECAL, Rear Quarter
15-16	5500 5206-7	1			DECAL, Lift Door
17	5500 5179	1			DECAL, Grille Panel
18-19	5500 5208-9	1			DECAL, Hood
20	5500 5211	1			DECAL, Lift Door
21	5500 5210	1			DECAL, Lift Door
22-23	5500 5212-3	1			DECAL, Door
24-25	5500 6220-1	1			DECAL, Door

MODEL CODES
16=Cherokee 2 Dr.(1981-83)
17=Cherokee 2 Dr.(1981-83)
73=Cherokee 2WD-2 Dr.(1984-86)
74=Cherokee 2WD-4 Dr.(1984-86)
18=Cherokee 4 Dr.(1981-83)
77=Cherokee 4WD-2 Dr.(1984-86)
78=Cherokee 4WD-4 Dr.(1984-86)
85=CJ-5 (1981-83)
86=CJ-6(1981)
87=CJ-7(1981-86)
88=CJ-8, Scrambler(1981-86)
64=Comanche 2WD-6 Ft. Box(1986)
66=Comanche 2WD-7 Ft. Box(1986)
63=Comanche 4WD-6 Ft. Box(1986)
65=Comanche 4WD-7 Ft. Box(1986)
15=Grand Wagoneer 4 Dr.(1984-86)
25=J-10 Truck 7 Ft. Box(1981-84)
26=J10 Truck 8 Ft. Box(1981-86)
27=J-20 Truck 8 Ft. Box(1981-86)
15=Wagoneer 4 Dr.(1981-83)
75=Wagoneer 4WD-4 Dr.(1984-86)

BODY
CJ=CJ-5, CJ-6, CJ-7, CJ-8, Scrambler(1981-86)
MJ=Comanche Pickup(1986)

STYLES
SJ=Wagoneer(1981-83), Grand Wagoneer(1984-86), Cherokee(1981-83), J-10, J-20(1981-86)
XJ=Wagoneer(1984-86), Cherokee(1984-86)

AR = Use as Required - = Non Illustrated Part P.A.R. = Paint as Required

« RETURN TO GROUP INDEX

DECALS, EXTERIOR CHIEF, TYPE 2 1984, 1985-86 XJ CHEROKEE 2 DOOR
Figure 23-4900

81J68 4900

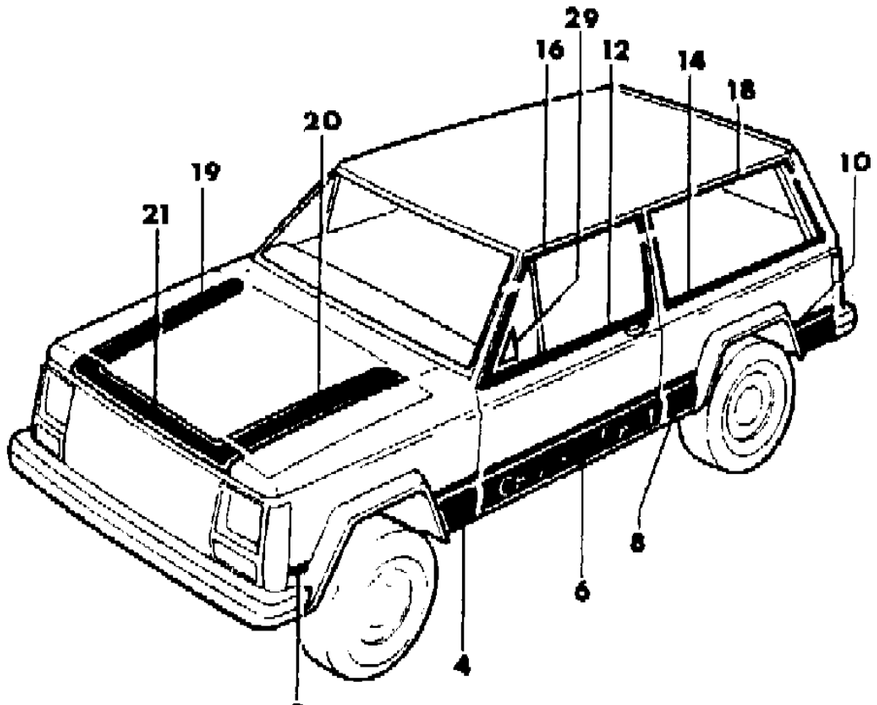

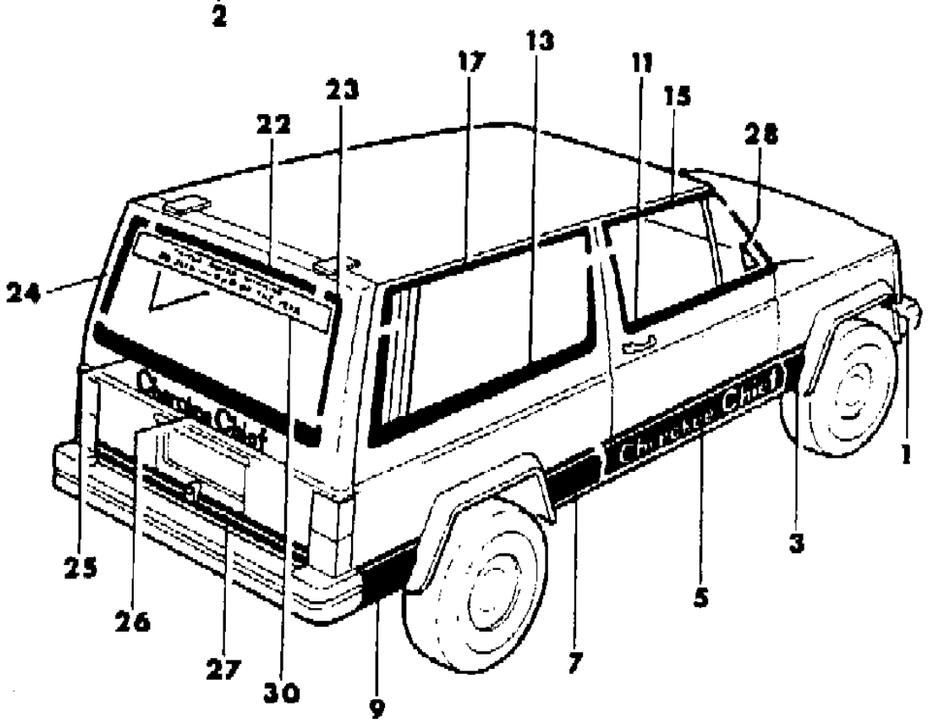

ITEM	PART NUMBER	QTY	BODY	MODEL	DESCRIPTION
1-2	5500 6772-3	1			DECAL, Fender: 1984-85
3-4	5500 6774-5	1			DECAL, Fender
5-6					DECAL, Door
	5500 6776-7	1			1984-85: small letters
	5500 9778-9	1			1986: capital letters
7-8	5500 6778-9	1			DECAL, Rear Quarter
9-10	5500 6780-1	1			DECAL, Rear Quarter
11-12	5500 6782-3	1			DECAL, Door Frame
13-14	5500 6786-7	1			DECAL, Rear Quarter
15-16	5500 6784-5	1			DECAL, Door Frame
17-18	5500 6788-9	1			DECAL, Rear Quarter
19-20	5500 5208-9	1			DECAL, Hood
21	5500 5179	1			DECAL, Grille Panel
22	5500 6814	1			DECAL, Lift Door
23-24	5500 6810-1	1			DECAL, Lift Door
25	5500 6812	1			DECAL, Lift Door
26					DECAL, Lift Door
	5500 5210	1			1984-85: small letters
	5500 9782	1			1986: capital letters
27	5500 5211	1			DECAL, Lift Door
28-29	5500 6220-1	1			DECAL, Door
30	5500 7400	1			DECAL, "4X4 of The Year"

MODEL CODES

16=Cherokee 2 Dr.(1981-83)
17=Cherokee 2 Dr.(1981-83)
73=Cherokee 2WD-2 Dr.(1984-86)
74=Cherokee 2WD-4 Dr.(1984-86)
18=Cherokee 4 Dr.(1981-83)
77=Cherokee 4WD-2 Dr.(1984-86)
78=Cherokee 4WD-4 Dr.(1984-86)
85=CJ-5 (1981-83)
86=CJ-6(1981)
87=CJ-7(1981-86)
88=CJ-8, Scrambler(1981-86)
64=Comanche 2WD-6 Ft. Box(1986)
66=Comanche 2WD-7 Ft. Box(1986)
63=Comanche 4WD-6 Ft. Box(1986)
65=Comanche 4WD-7 Ft. Box(1986)
15=Grand Wagoneer 4 Dr.(1984-86)
25=J-10 Truck 7 Ft. Box(1981-84)
26=J10 Truck 8 Ft. Box(1981-86)
27=J-20 Truck 8 Ft. Box(1981-86)
15=Wagoneer 4 Dr.(1981-83)
75=Wagoneer 4WD-4 Dr.(1984-86)

BODY
CJ=CJ-5, CJ-6, CJ-7, CJ-8, Scrambler(1981-86)
MJ=Comanche Pickup(1986)

STYLES
SJ=Wagoneer(1981-83), Grand Wagoneer(1984-86), Cherokee(1981-83), J-10, J-20(1981-86)
XJ=Wagoneer(1984-86), Cherokee(1984-86)

AR = Use as Required - = Non Illustrated Part P.A.R. = Paint as Required

« RETURN TO GROUP INDEX

DECALS, EXTERIOR CHIEF, E.C.E., 1986 XJ CHEROKEE 2 DOOR
Figure 23-5000

81J68 5000

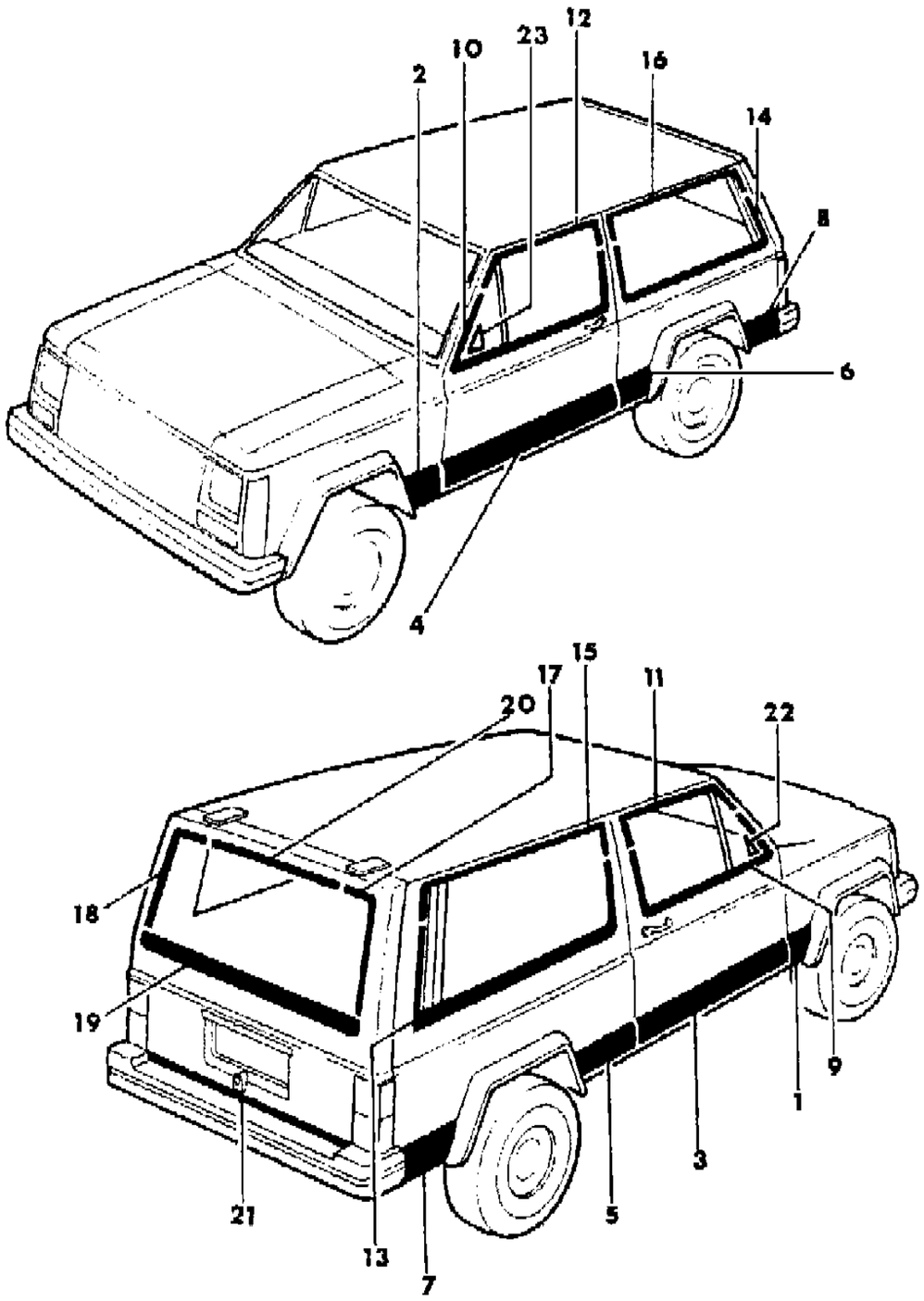

ITEM	PART NUMBER	QTY	BODY	MODEL	DESCRIPTION
1-2	5500 8192-3	1			DECAL, Fender, Black
3-4	5500 8194-5	1			DECAL, Door, Black
5-6	5500 8196-7	1			DECAL, Rear Quarter, Black
7-8	5500 8198-9	1			DECAL, Rear Quarter, Black
9-10	5500 6782-3	1			DECAL, Door Frame, Black
11-12	5500 6784-5	1			DECAL, Door Frame, Black
13-14	5500 6786-7	1			DECAL, Rear Quarter, Black
15-16	5500 6788-9	1			DECAL, Rear Quarter, Black
17-18	5500 6810-1	1			DECAL, Lift Door, Black
19	5500 6812	1			DECAL, Lift Door, Black
20	5500 6814	1			DECAL, Lift Door, Black
21	5500 8200	1			DECAL, Lift Door, Black
22-23	5500 6220-1	1			DECAL, Door, Black

MODEL CODES

16=Cherokee 2 Dr.(1981-83)
17=Cherokee 2 Dr.(1981-83)
73=Cherokee 2WD-2 Dr.(1984-86)
74=Cherokee 2WD-4 Dr.(1984-86)
18=Cherokee 4 Dr.(1981-83)
77=Cherokee 4WD-2 Dr.(1984-86)
78=Cherokee 4WD-4 Dr.(1984-86)
85=CJ-5 (1981-83)
86=CJ-6(1981)
87=CJ-7(1981-86)
88=CJ-8, Scrambler(1981-86)
64=Comanche 2WD-6 Ft. Box(1986)
66=Comanche 2WD-7 Ft. Box(1986)
63=Comanche 4WD-6 Ft. Box(1986)
65=Comanche 4WD-7 Ft. Box(1986)
15=Grand Wagoneer 4 Dr.(1984-86)
25=J-10 Truck 7 Ft. Box(1981-84)
26=J10 Truck 8 Ft. Box(1981-86)
27=J-20 Truck 8 Ft. Box(1981-86)
15=Wagoneer 4 Dr.(1981-83)
75=Wagoneer 4WD-4 Dr.(1984-86)

BODY
CJ=CJ-5, CJ-6, CJ-7, CJ-8, Scrambler(1981-86)
MJ=Comanche Pickup(1986)

STYLES
SJ=Wagoneer(1981-83), Grand Wagoneer(1984-86), Cherokee(1981-83), J-10, J-20(1981-86)
XJ=Wagoneer(1984-86), Cherokee(1984-86)

AR = Use as Required - = Non Illustrated Part P.A.R. = Paint as Required

« RETURN TO GROUP INDEX

DECALS, EXTERIOR LAREDO, 1984-86 XJ CHEROKEE 2 DOOR
Figure 23-5100

81J68 5100

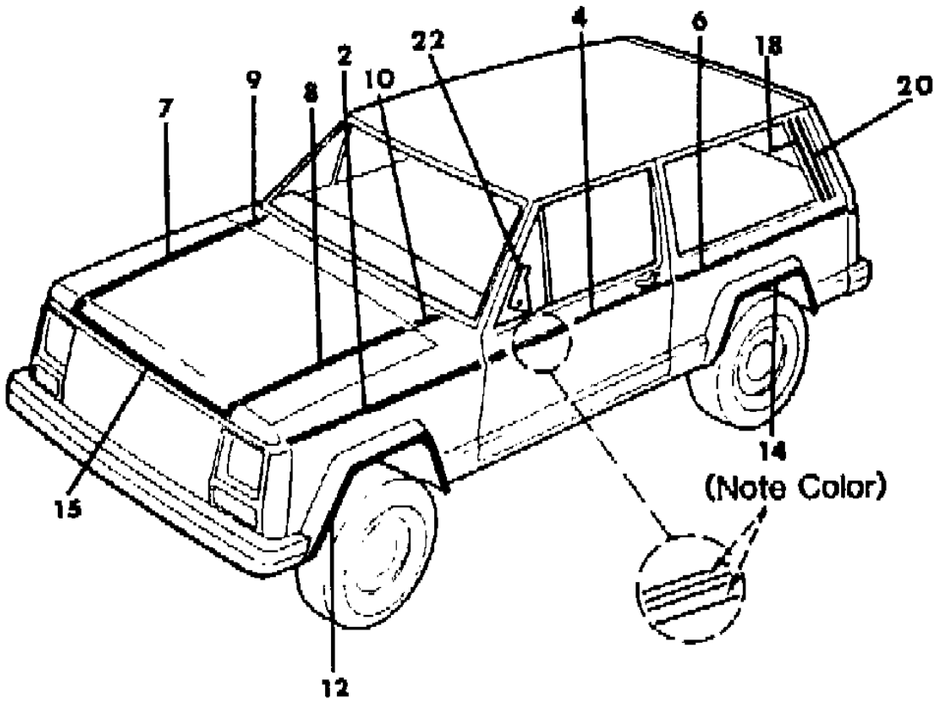

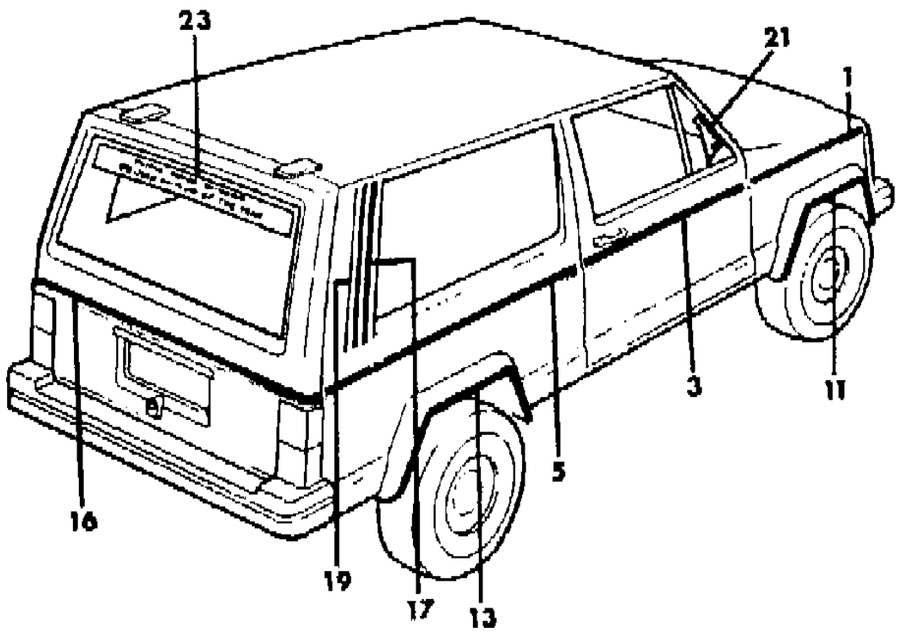

ITEM	PART NUMBER	QTY	BODY	MODEL	DESCRIPTION
1-2					DECAL, Fender
	5500 5972-3	1			Dark Red
	5500 5952-3	1			Gold
3-4					DECAL, Door
	5500 7442-3	1			Dark Red
	5500 7454-5	1			Gold
5-6					DECAL, Rear Quarter
	5500 7444-5	1			Dark Red
	5500 7456-7	1			Gold
7-8					DECAL, Hood
	5500 5968-9	1			Dark Red
	5500 5948-9	1			Gold
9-10					DECAL, Cowl
	5500 5970-1	1			Dark Red
	5500 5950-1	1			Gold
11-12					DECAL, Wheel Opening: 1985
	5500 7446-7	1			Dark Red
	5500 7458-9	1			Gold
13-14					DECAL, Wheel Opening: 1985
	5500 7448-9	1			Dark Red
	5500 7460-1	1			Gold
15					DECAL, Grille Panel
	5500 5966	1			Dark Red
	5500 5946	1			Gold
16					DECAL, Lift Door
	5500 5967	1			Dark Red
	5500 5947	1			Gold
17-18	5500 3644-5	1			DECAL, Rear Quarter, Black
19-20	5500 3646-7	1			DECAL, Rear Quarter, Black
21-22	5500 6220-1	1			DECAL, Door
23	5500 7400	1			DECAL, "4X4 of The Year"

MODEL CODES

16=Cherokee 2 Dr.(1981-83)
17=Cherokee 2 Dr.(1981-83)
73=Cherokee 2WD-2 Dr.(1984-86)
74=Cherokee 2WD-4 Dr.(1984-86)
18=Cherokee 4 Dr.(1981-83)
77=Cherokee 4WD-2 Dr.(1984-86)
78=Cherokee 4WD-4 Dr.(1984-86)
85=CJ-5 (1981-83)
86=CJ-6(1981)
87=CJ-7(1981-86)
88=CJ-8, Scrambler(1981-86)
64=Comanche 2WD-6 Ft. Box(1986)
66=Comanche 2WD-7 Ft. Box(1986)
63=Comanche 4WD-6 Ft. Box(1986)
65=Comanche 4WD-7 Ft. Box(1986)
15=Grand Wagoneer 4 Dr.(1984-86)
25=J-10 Truck 7 Ft. Box(1981-84)
26=J10 Truck 8 Ft. Box(1981-86)
27=J-20 Truck 8 Ft. Box(1981-86)
15=Wagoneer 4 Dr.(1981-83)
75=Wagoneer 4WD-4 Dr.(1984-86)

BODY
CJ=CJ-5, CJ-6, CJ-7, CJ-8, Scrambler(1981-86)
MJ=Comanche Pickup(1986)

STYLES
SJ=Wagoneer(1981-83), Grand Wagoneer(1984-86), Cherokee(1981-83), J-10, J-20(1981-86)
XJ=Wagoneer(1984-86), Cherokee(1984-86)

AR = Use as Required - = Non Illustrated Part P.A.R. = Paint as Required

« RETURN TO GROUP INDEX

DECALS, EXTERIOR SPRING PROMOTION, 1984 XJ CHEROKEE 2 DOOR
Figure 23-5200

81J68 5200

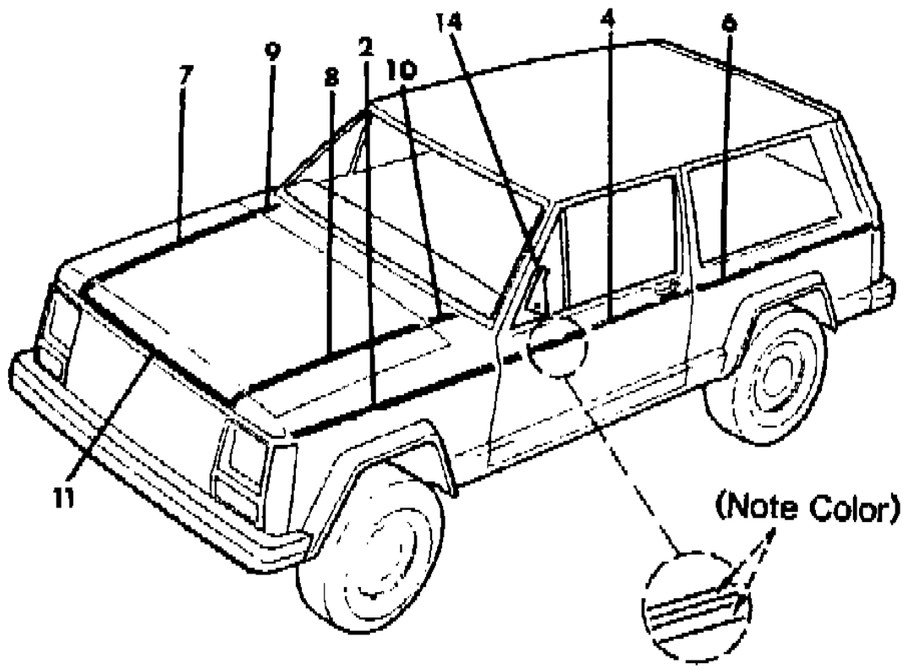

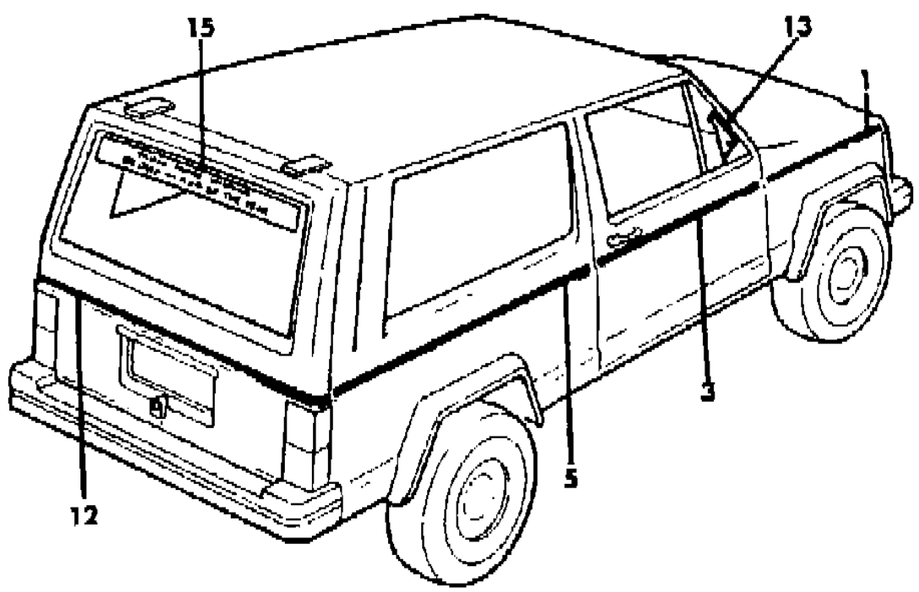

ITEM	PART NUMBER	QTY	BODY	MODEL	DESCRIPTION
1-2	5500 7426-7	1			DECAL, Fender, Red
3-4	5500 7428-9	1			DECAL, Door, Red
5-6	5500 7436-7	1			DECAL, Rear Quarter, Red
7-8	5500 7422-3	1			DECAL, Hood, Red
9-10	5500 7424-5	1			DECAL, Cowl, Red
11	5500 7439	1			DECAL, Grille Panel, Red
12	5500 7438	1			DECAL, Lift Door, Red
13-14	5500 6220-1	1			DECAL, Door, Black
15	5500 7400	1			DECAL, "4X4 of The Year"

MODEL CODES

16=Cherokee 2 Dr.(1981-83)
17=Cherokee 2 Dr.(1981-83)
73=Cherokee 2WD-2 Dr.(1984-86)
74=Cherokee 2WD-4 Dr.(1984-86)
18=Cherokee 4 Dr.(1981-83)
77=Cherokee 4WD-2 Dr.(1984-86)
78=Cherokee 4WD-4 Dr.(1984-86)
85=CJ-5 (1981-83)
86=CJ-6(1981)
87=CJ-7(1981-86)
88=CJ-8, Scrambler(1981-86)
64=Comanche 2WD-6 Ft. Box(1986)
66=Comanche 2WD-7 Ft. Box(1986)
63=Comanche 4WD-6 Ft. Box(1986)
65=Comanche 4WD-7 Ft. Box(1986)
15=Grand Wagoneer 4 Dr.(1984-86)
25=J-10 Truck 7 Ft. Box(1981-84)
26=J10 Truck 8 Ft. Box(1981-86)
27=J-20 Truck 8 Ft. Box(1981-86)
15=Wagoneer 4 Dr.(1981-83)
75=Wagoneer 4WD-4 Dr.(1984-86)

BODY
CJ=CJ-5, CJ-6, CJ-7, CJ-8, Scrambler(1981-86)
MJ=Comanche Pickup(1986)

STYLES
SJ=Wagoneer(1981-83), Grand Wagoneer(1984-86), Cherokee(1981-83), J-10, J-20(1981-86)
XJ=Wagoneer(1984-86), Cherokee(1984-86)

AR = Use as Required - = Non Illustrated Part P.A.R. = Paint as Required

« RETURN TO GROUP INDEX

DECALS, EXTERIOR SPRING PROMOTION, 1985 XJ CHEROKEE 2 DOOR
Figure 23-5300

81J68 5300

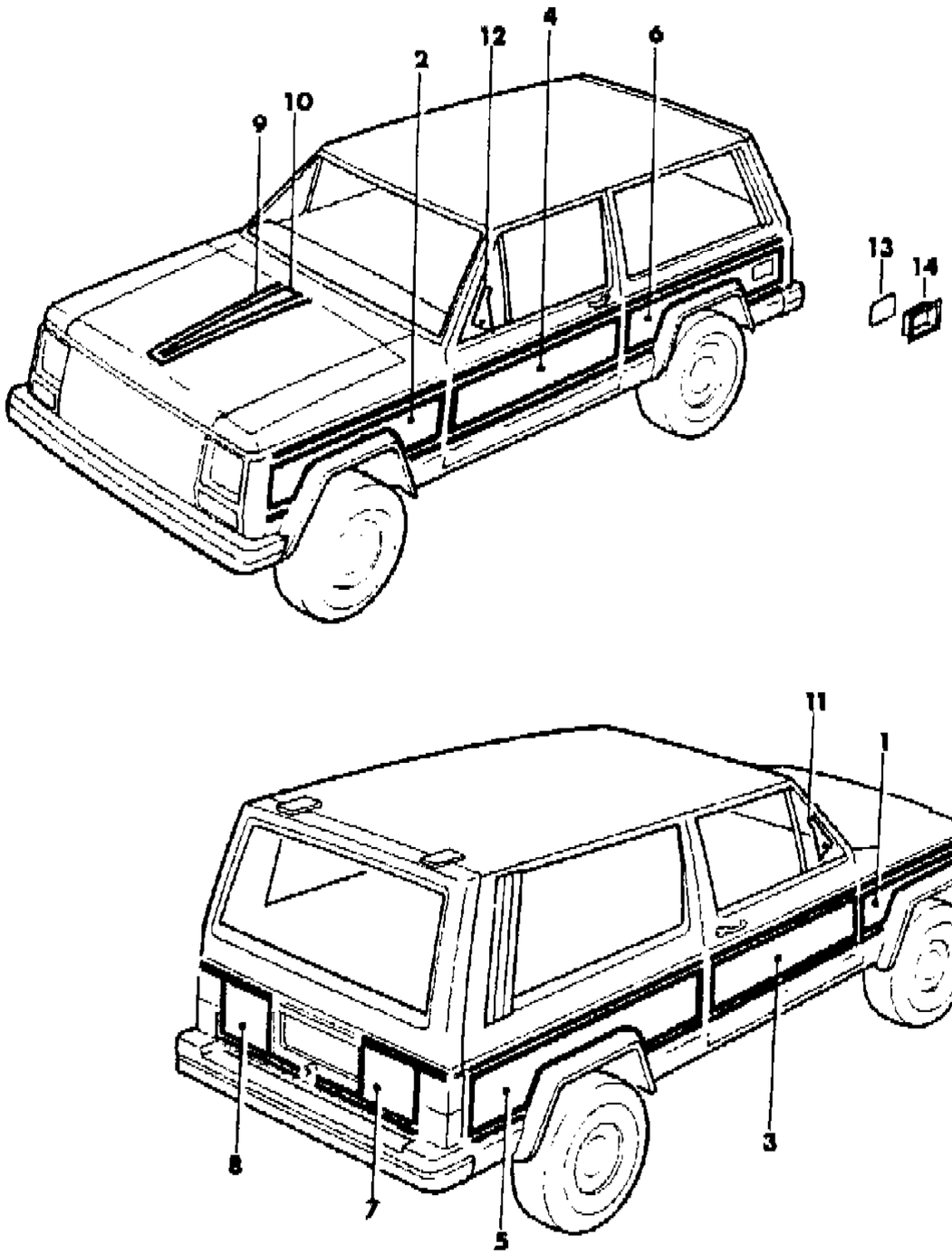

ITEM	PART NUMBER	QTY	BODY	MODEL	DESCRIPTION
1-2	5500 9616-7	1			DECAL, Fender, Dark Blue
3-4	5500 9614-5	1			DECAL, Door, Dark Blue
5-6	5500 9612-3	1			DECAL, Rear Quarter, Dark Blue
7-8	5500 9610-1	1			DECAL, Lift Door, Dark Blue
9	5500 9618	1			DECAL, Hood, Dark Blue
10	5500 9609	1			DECAL, Hood, Dark Blue
11-12	5500 6220-1	1			DECAL, Door, Black
13	5501 0200	1			DECAL, Fuel Filler Door, Dark Blue
14	5501 0766	1			RETAINER

MODEL CODES
16=Cherokee 2 Dr.(1981-83)
17=Cherokee 2 Dr.(1981-83)
73=Cherokee 2WD-2 Dr.(1984-86)
74=Cherokee 2WD-4 Dr.(1984-86)
18=Cherokee 4 Dr.(1981-83)
77=Cherokee 4WD-2 Dr.(1984-86)
78=Cherokee 4WD-4 Dr.(1984-86)
85=CJ-5 (1981-83)
86=CJ-6(1981)
87=CJ-7(1981-86)
88=CJ-8, Scrambler(1981-86)
64=Comanche 2WD-6 Ft. Box(1986)
66=Comanche 2WD-7 Ft. Box(1986)
63=Comanche 4WD-6 Ft. Box(1986)
65=Comanche 4WD-7 Ft. Box(1986)
15=Grand Wagoneer 4 Dr.(1984-86)
25=J-10 Truck 7 Ft. Box(1981-84)
26=J10 Truck 8 Ft. Box(1981-86)
27=J-20 Truck 8 Ft. Box(1981-86)
15=Wagoneer 4 Dr.(1981-83)
75=Wagoneer 4WD-4 Dr.(1984-86)

BODY
CJ=CJ-5, CJ-6, CJ-7, CJ-8, Scrambler(1981-86)
MJ=Comanche Pickup(1986)

STYLES
SJ=Wagoneer(1981-83), Grand Wagoneer(1984-86), Cherokee(1981-83), J-10, J-20(1981-86)
XJ=Wagoneer(1984-86), Cherokee(1984-86)

AR = Use as Required - = Non Illustrated Part P.A.R. = Paint as Required

« RETURN TO GROUP INDEX

NAMEPLATES XJ WAGONEER
Figure 23-5400

81J68 5400

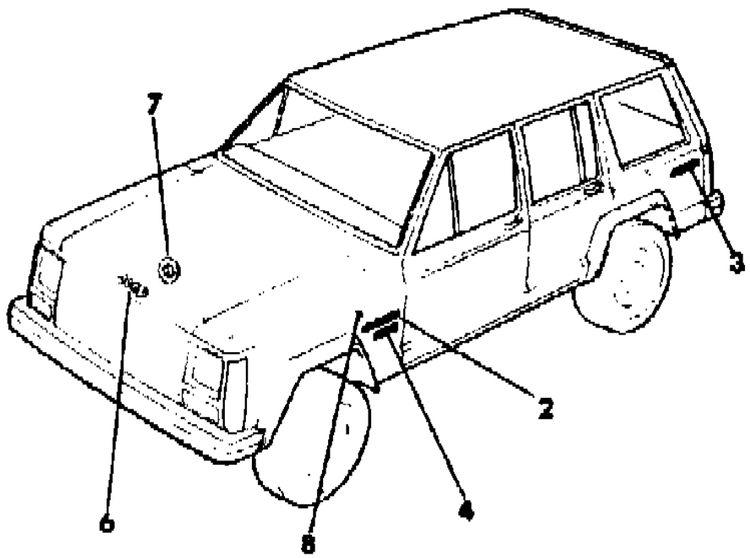

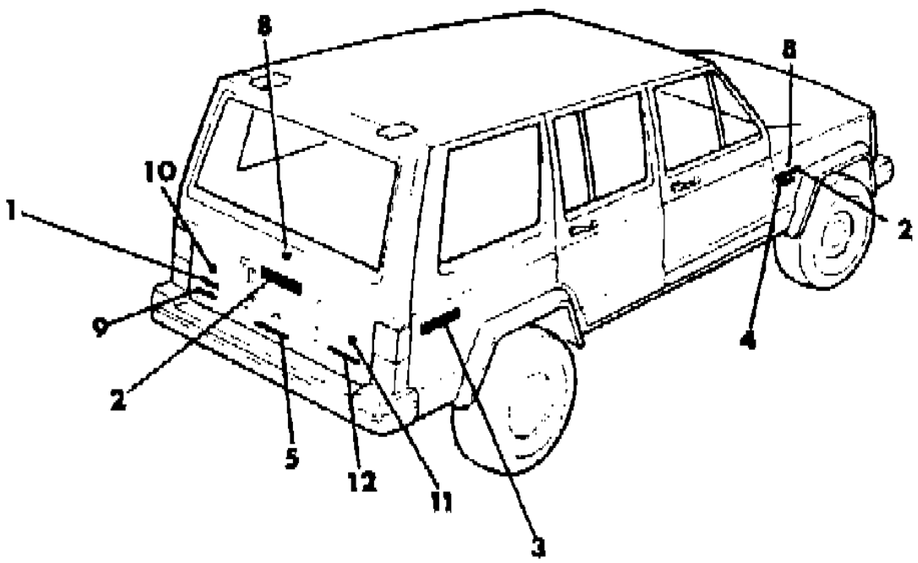

ITEM	PART NUMBER	QTY	BODY	MODEL	DESCRIPTION
1					NAMEPLATE
	5505 2505	1			"2.5 Litre", 1984-85
	5501 0893	1			"2.5 Litre", 1986
	5500 5222	1			"V6 2.8 Litre", 1984-85
	5501 0894	1			"V6 2.8 Litre", 1986
	5500 6610	1			"Turbo Diesel", 1985
	5501 0895	1			"Turbo Diesel", 1986
2					NAMEPLATE
	5505 2507	AR			"Wagoneer", 1984-85
	5501 0892	AR			"Wagoneer", 1986
3					NAMEPLATE
	5500 5712	2			"Selec Trac", 1984-85
	5501 0896	2			"Selec Trac", 1986
	5500 7817	2			"4X4"
	5500 5713	2			"4 Wheel Drive"
4					NAMEPLATE
	5500 3322	1			"Limited", 1984-85
	5501 0904	2			"Limited", 1986
5	5500 8340	1			NAMEPLATE, "Jeep", 1985-86
6					NAMEPLATE
	5505 2502	1			"Jeep", 1984-85
	5501 2986	1			"Jeep", 1986
7	1150 2557	4			NUT
8	J400 1335	AR			CLIP
9	5500 8338	1			NAMEPLATE, "Fuel Injection"
10	J400 3657	2			CLIP
11	J400 3656	AR			CLIP
12	5500 8339	1			NAMEPLATE, "Command Trac"

MODEL CODES

16=Cherokee 2 Dr.(1981-83)
17=Cherokee 2 Dr.(1981-83)
73=Cherokee 2WD-2 Dr.(1984-86)
74=Cherokee 2WD-4 Dr.(1984-86)
18=Cherokee 4 Dr.(1981-83)
77=Cherokee 4WD-2 Dr.(1984-86)
78=Cherokee 4WD-4 Dr.(1984-86)
85=CJ-5 (1981-83)
86=CJ-6(1981)
87=CJ-7(1981-86)
88=CJ-8, Scrambler(1981-86)
64=Comanche 2WD-6 Ft. Box(1986)
66=Comanche 2WD-7 Ft. Box(1986)
63=Comanche 4WD-6 Ft. Box(1986)
65=Comanche 4WD-7 Ft. Box(1986)
15=Grand Wagoneer 4 Dr.(1984-86)
25=J-10 Truck 7 Ft. Box(1981-84)
26=J10 Truck 8 Ft. Box(1981-86)
27=J-20 Truck 8 Ft. Box(1981-86)
15=Wagoneer 4 Dr.(1981-83)
75=Wagoneer 4WD-4 Dr.(1984-86)

BODY
CJ=CJ-5, CJ-6, CJ-7, CJ-8, Scrambler(1981-86)
MJ=Comanche Pickup(1986)

STYLES
SJ=Wagoneer(1981-83), Grand Wagoneer(1984-86), Cherokee(1981-83), J-10, J-20(1981-86)
XJ=Wagoneer(1984-86), Cherokee(1984-86)

AR = Use as Required - = Non Illustrated Part P.A.R. = Paint as Required

« RETURN TO GROUP INDEX

MOULDINGS, EXTERIOR, UPPER XJ WAGONEER
Figure 23-5500

81J68 5500

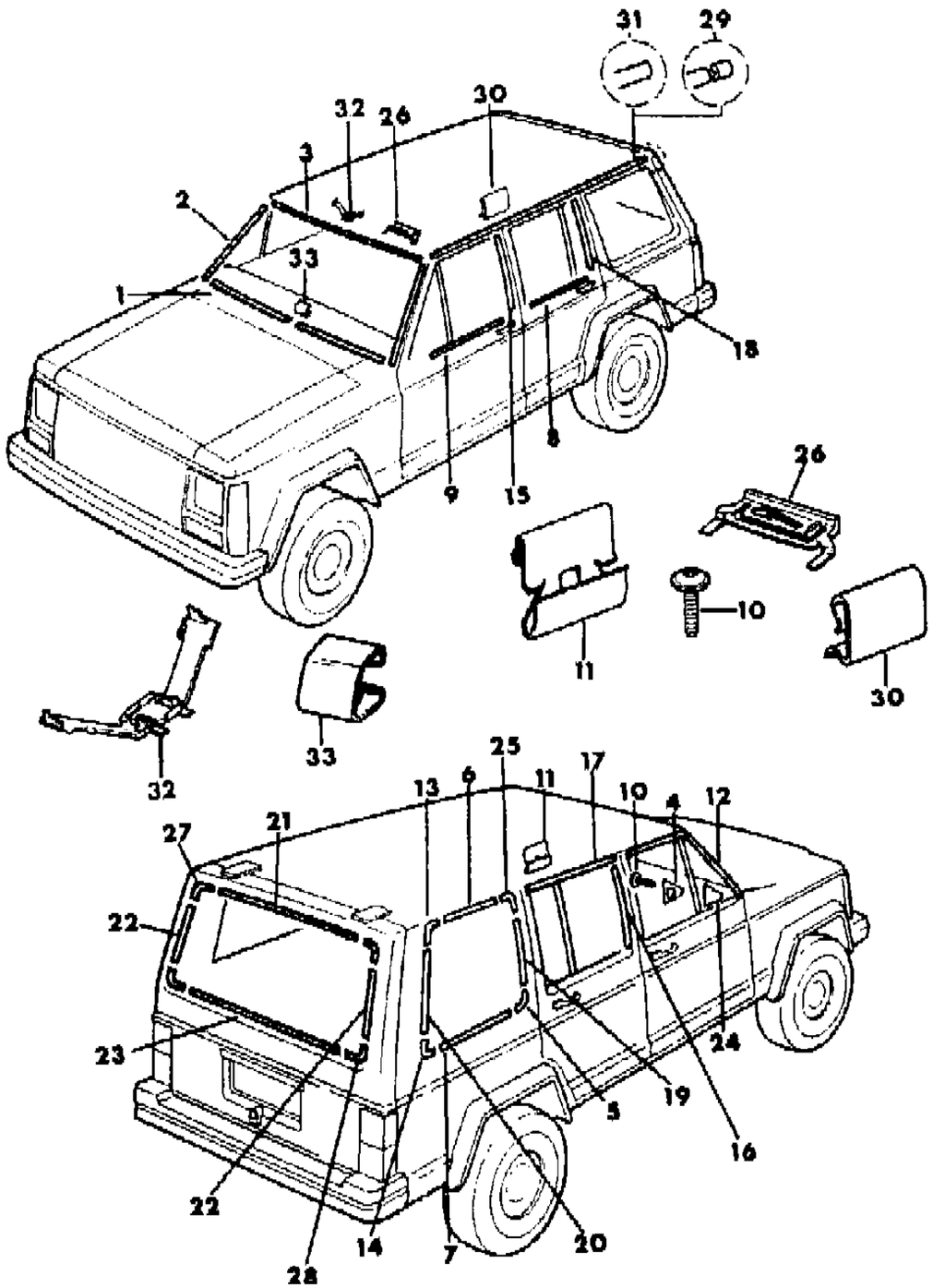

ITEM	PART NUMBER	QTY	BODY	MODEL	DESCRIPTION
1					MOULDING, Windshield
	5500 6380	1			Right
	5500 2509	1			Left
2	5500 0546-7	1			MOULDING, Windshield
3	5500 0544	1			MOULDING, Windshield
4	5500 5430-1	1			GASKET
5	5500 5374	2			CAP, Moulding
6	5500 5371	2			MOULDING, Rear Quarter
7	5500 5300	2			MOULDING, Rear Quarter
8	5500 5382	2			MOULDING, Door
9	5500 5270-1	1			MOULDING, Door
10	3420 1957	4			SCREW
11	5500 5384	4			CLIP
12	5500 5320-1	1			MOULDING, Door
13	5500 5375	2			CAP, Moulding
14	5500 5376	2			CAP, Moulding
15	5500 5324-5	1			MOULDING, Door
16	5500 5274-5	1			MOULDING, Door
17	5500 5276-7	1			MOULDING, Door
18	5500 5272-3	1			MOULDING, Door
19	5500 5296	2			MOULDING, Rear Quarter
20	5500 5298	2			MOULDING, Rear Quarter
21	5500 5331	1			MOULDING, Lift Door
22	5500 5308	2			MOULDING, Lift Door
23	5500 5332	1			MOULDING, Lift Door
24	5500 5312-3	1			COVER, used in place of mirror
25	5500 5373	2			CAP, Moulding
26	J400 6211	26			CLIP
27	5500 5333	2			CAP, Moulding
28	5500 5334	2			CAP, Moulding
29	5501 3656-7	1			MOULDING, Drip
30	3500 2115	AR			CLIP
31	5500 0548-9	1			MOULDING, Drip
32	5500 2605	26			CLIP
33	5500 6386	1			CLIP, Cover

MODEL CODES
16=Cherokee 2 Dr.(1981-83)
17=Cherokee 2 Dr.(1981-83)
73=Cherokee 2WD-2 Dr.(1984-86)
74=Cherokee 2WD-4 Dr.(1984-86)
18=Cherokee 4 Dr.(1981-83)
77=Cherokee 4WD-2 Dr.(1984-86)
78=Cherokee 4WD-4 Dr.(1984-86)
85=CJ-5 (1981-83)
86=CJ-6(1981)
87=CJ-7(1981-86)
88=CJ-8, Scrambler(1981-86)
64=Comanche 2WD-6 Ft. Box(1986)
66=Comanche 2WD-7 Ft. Box(1986)
63=Comanche 4WD-6 Ft. Box(1986)
65=Comanche 4WD-7 Ft. Box(1986)
15=Grand Wagoneer 4 Dr.(1984-86)
25=J-10 Truck 7 Ft. Box(1981-84)
26=J10 Truck 8 Ft. Box(1981-86)
27=J-20 Truck 8 Ft. Box(1981-86)
15=Wagoneer 4 Dr.(1981-83)
75=Wagoneer 4WD-4 Dr.(1984-86)

BODY
CJ=CJ-5, CJ-6, CJ-7, CJ-8, Scrambler(1981-86)
MJ=Comanche Pickup(1986)

STYLES
SJ=Wagoneer(1981-83), Grand Wagoneer(1984-86), Cherokee(1981-83), J-10, J-20(1981-86)
XJ=Wagoneer(1984-86), Cherokee(1984-86)

AR = Use as Required - = Non Illustrated Part P.A.R. = Paint as Required

« RETURN TO GROUP INDEX

MOULDINGS, EXTERIOR, LOWER XJ WAGONEER LIMITED
Figure 23-5600

81J68 5600

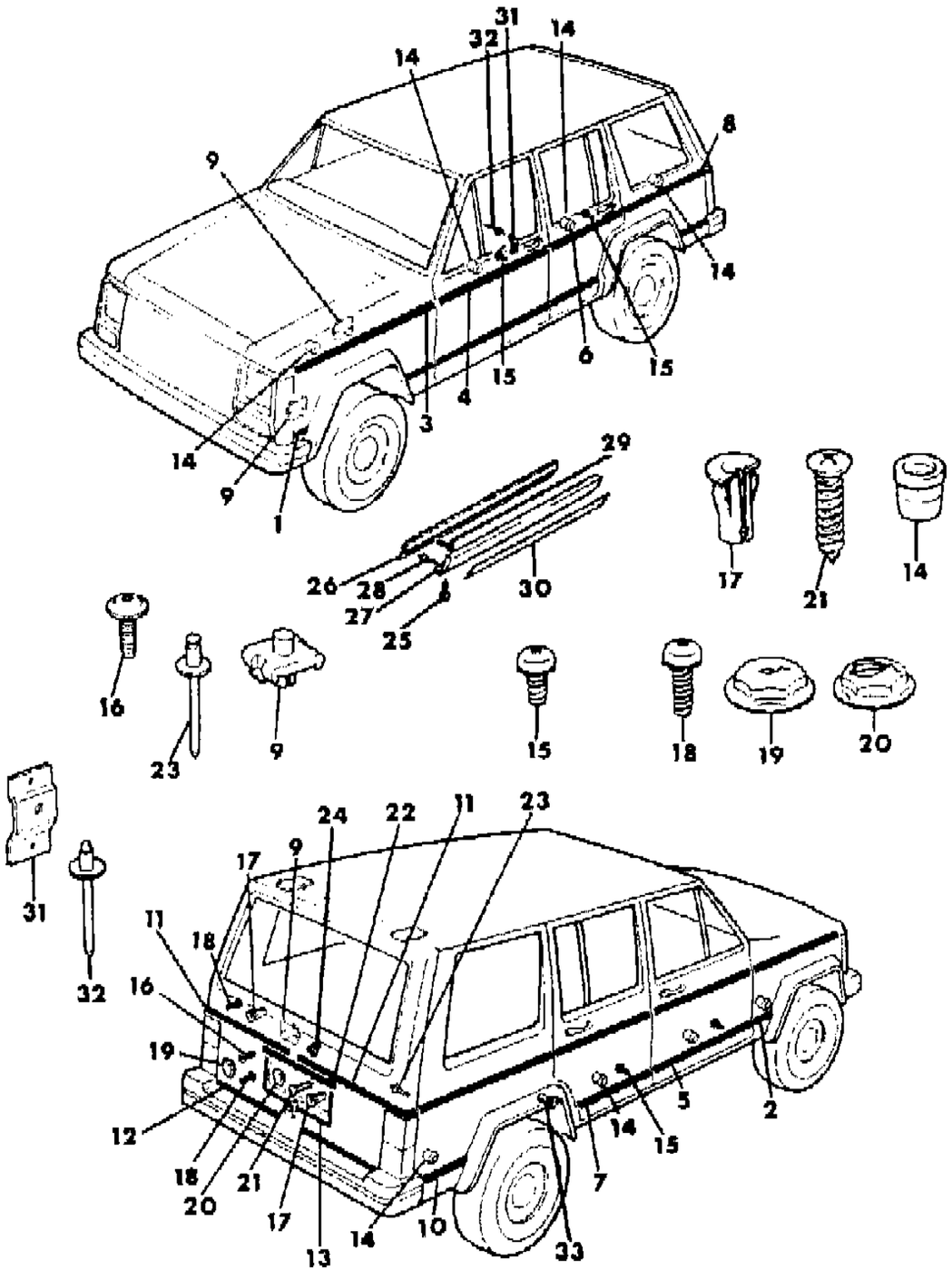

ITEM	PART NUMBER	QTY	BODY	MODEL	DESCRIPTION
1	5500 3802-3	1			MOULDING, Fender
2	5500 3806-7	1			MOULDING, Fender
3	5500 3840-1	1			MOULDING, Fender
4	5500 3852-3	1			MOULDING, Door
5	5500 3854-5	1			MOULDING, Door
6	5500 3860-1	1			MOULDING, Door
7	5500 3844-5	1			MOULDING, Door
8	5500 3848	2			MOULDING, Rear Quarter
9	J097 2422	AR			RETAINER
10	5500 3810-1	1			MOULDING, Rear Quarter
11	5500 3820-1	1			MOULDING, Lift Door
12	5500 3815	2			MOULDING, Lift Door
13	5500 3828-9	1			MOULDING, License
14	3420 1767	52			CLIP
15	3420 1797	12			SCREW
16	3420 2005	1			SCREW
17	3420 1782	1			CLIP
18	3420 1798	6			SCREW
19	1150 1855	2			NUT
20	1150 1047	2			NUT
21	1150 2796	2			SCREW
22	5500 7242	1			OVERLAY, License Plate
23	3420 1684	2			RIVET
24	J400 1335	2			CLIP
25	3420 1984	14			SCREW
26	5500 5409	2			RETAINER
27	5500 5518	2			APPLIQUE, Rocker Panel
28	J400 2185	12			RIVET
29	3420 1292	2			SCREW
30	5505 2524	2			FILM, Abrasion Resistant ***
31	5500 4428-9	1			BRACKET, Mounting
32	3420 1778	4			RIVET
33	3420 1799	2			CLIP

MODEL CODES

16=Cherokee 2 Dr.(1981-83)
17=Cherokee 2 Dr.(1981-83)
73=Cherokee 2WD-2 Dr.(1984-86)
74=Cherokee 2WD-4 Dr.(1984-86)
18=Cherokee 4 Dr.(1981-83)
77=Cherokee 4WD-2 Dr.(1984-86)
78=Cherokee 4WD-4 Dr.(1984-86)
85=CJ-5 (1981-83)
86=CJ-6(1981)
87=CJ-7(1981-86)
88=CJ-8, Scrambler(1981-86)
64=Comanche 2WD-6 Ft. Box(1986)
66=Comanche 2WD-7 Ft. Box(1986)
63=Comanche 4WD-6 Ft. Box(1986)
65=Comanche 4WD-7 Ft. Box(1986)
15=Grand Wagoneer 4 Dr.(1984-86)
25=J-10 Truck 7 Ft. Box(1981-84)
26=J10 Truck 8 Ft. Box(1981-86)
27=J-20 Truck 8 Ft. Box(1981-86)
15=Wagoneer 4 Dr.(1981-83)
75=Wagoneer 4WD-4 Dr.(1984-86)

BODY

CJ=CJ-5, CJ-6, CJ-7, CJ-8, Scrambler(1981-86)
MJ=Comanche Pickup(1986)

STYLES

SJ=Wagoneer(1981-83), Grand Wagoneer(1984-86), Cherokee(1981-83), J-10, J-20(1981-86)
XJ=Wagoneer(1984-86), Cherokee(1984-86)

AR = Use as Required - = Non Illustrated Part P.A.R. = Paint as Required

« RETURN TO GROUP INDEX

DECALS, EXTERIOR WOODGRAIN XJ WAGONEER LIMITED
Figure 23-5700

81J68 5700

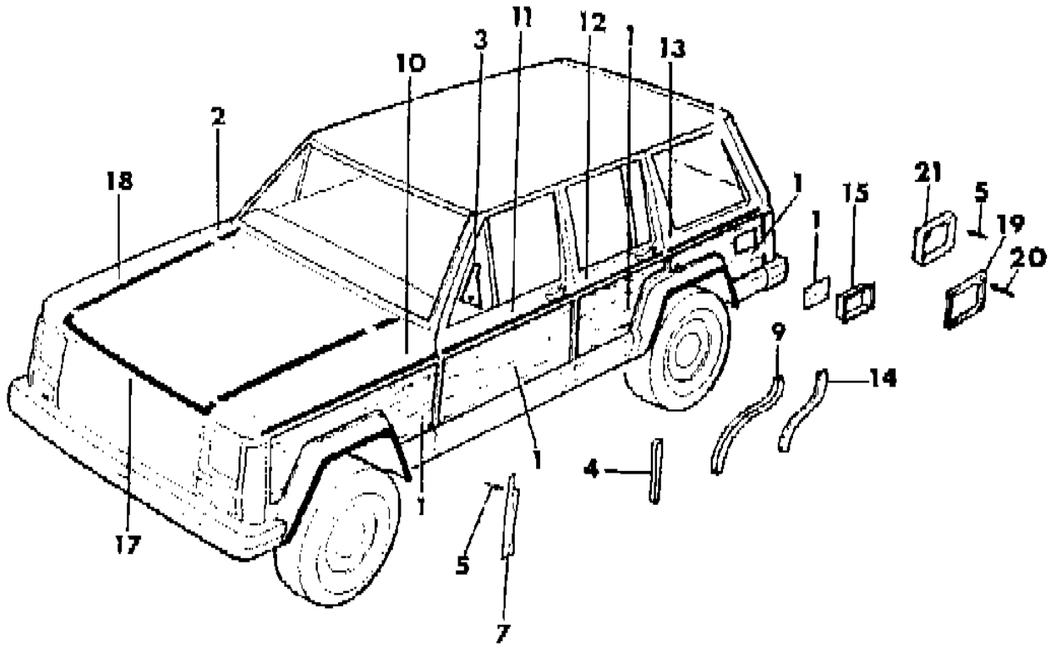

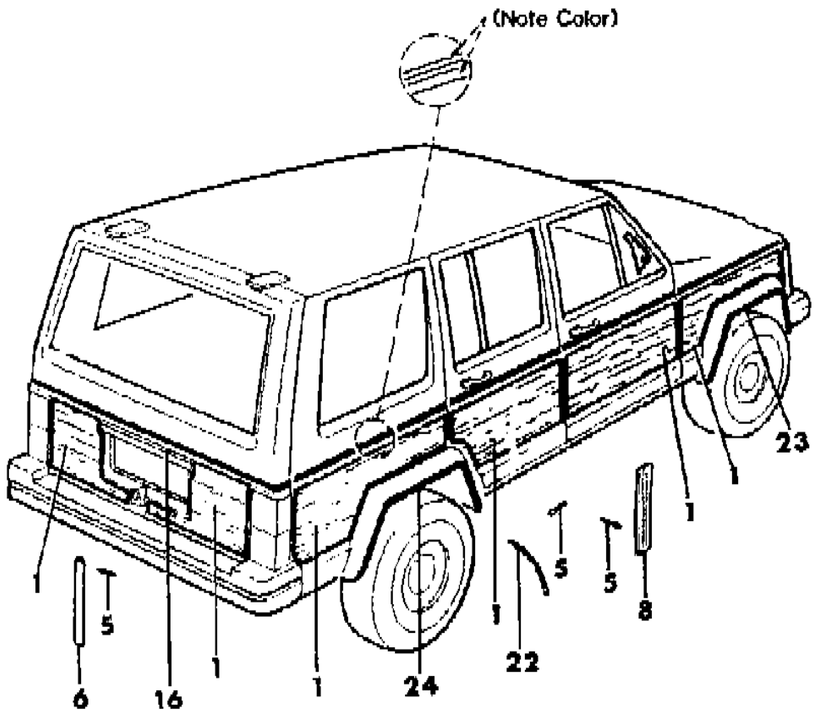

ITEM	PART NUMBER	QTY	BODY	MODEL	DESCRIPTION
1	J813 3349	11			DECAL, Woodgrain, Modification Required
2	5500 5950-1	1			DECAL, Cowl, Gold
3	5500 6220-1	1			DECAL, Door, Black
4	5500 3831	2			MOULDING, Door
5					RIVET
	3420 2204	AR			8.5mm collar diameter
	3420 2200	12			6.6mm collar diameter
6	5500 4808	2			RETAINER
7	5500 4804-5	1			RETAINER
8	5500 4806-7	1			RETAINER
9	5500 4796-7	1			MOULDING, Door
10	5500 5952-3	1			DECAL, Fender, Gold
11	5500 5954-5	1			DECAL, Door, Gold
12	5500 5956-7	1			DECAL, Door, Gold
13	5500 5958-9	1			DECAL, Rear Quarter, Gold
14	5505 2530-1	1			RETAINER
15	5505 2532	1			RETAINER
16	5500 5947	1			DECAL, Lift Door, Gold
17	5500 5946	1			DECAL, Grille Panel, Gold
18	5500 5948-9	1			DECAL, Hood, Gold
19	5500 3835	1			RETAINER, 1984-85
20	3420 1792	4			RIVET, 1984-85
21	5500 3833	1			RETAINER, 1984-85
22					RETAINER/APPLIQUE ***
	5500 4802-3	1			Nutmeg, Metal: 1984
	5505 2512-3	1			Woodgrain, Plastic: 1984-85
23	5500 6568-9	1			DECAL, Wheel Opening, Gold: 1984
24	5500 6570-1	1			DECAL, Wheel Opening, Gold: 1984

MODEL CODES

16=Cherokee 2 Dr.(1981-83)	78=Cherokee 4WD-4 Dr.(1984-86)	64=Comanche 2WD-6 Ft. Box(1986)	25=J-10 Truck 7 Ft. Box(1981-84)
17=Cherokee 2 Dr.(1981-83)	85=CJ-5 (1981-83)	66=Comanche 2WD-7 Ft. Box(1986)	26=J10 Truck 8 Ft. Box(1981-86)
73=Cherokee 2WD-2 Dr.(1984-86)	86=CJ-6(1981)	63=Comanche 4WD-6 Ft. Box(1986)	27=J-20 Truck 8 Ft. Box(1981-86)
74=Cherokee 2WD-4 Dr.(1984-86)	87=CJ-7(1981-86)	65=Comanche 4WD-7 Ft. Box(1986)	15=Wagoneer 4 Dr.(1981-83)
18=Cherokee 4 Dr.(1981-83)	88=CJ-8, Scrambler(1981-86)	15=Grand Wagoneer 4 Dr.(1984-86)	75=Wagoneer 4WD-4 Dr.(1984-86)
77=Cherokee 4WD-2 Dr.(1984-86)			

BODY
CJ=CJ-5, CJ-6, CJ-7, CJ-8, Scrambler(1981-86)
MJ=Comanche Pickup(1986)

STYLES
SJ=Wagoneer(1981-83), Grand Wagoneer(1984-86), Cherokee(1981-83), J-10, J-20(1981-86)
XJ=Wagoneer(1984-86), Cherokee(1984-86)

AR = Use as Required - = Non Illustrated Part P.A.R. = Paint as Required

« RETURN TO GROUP INDEX

DECALS, EXTERIOR PINSTRIPE XJ WAGONEER
Figure 23-5800

81J68 5800

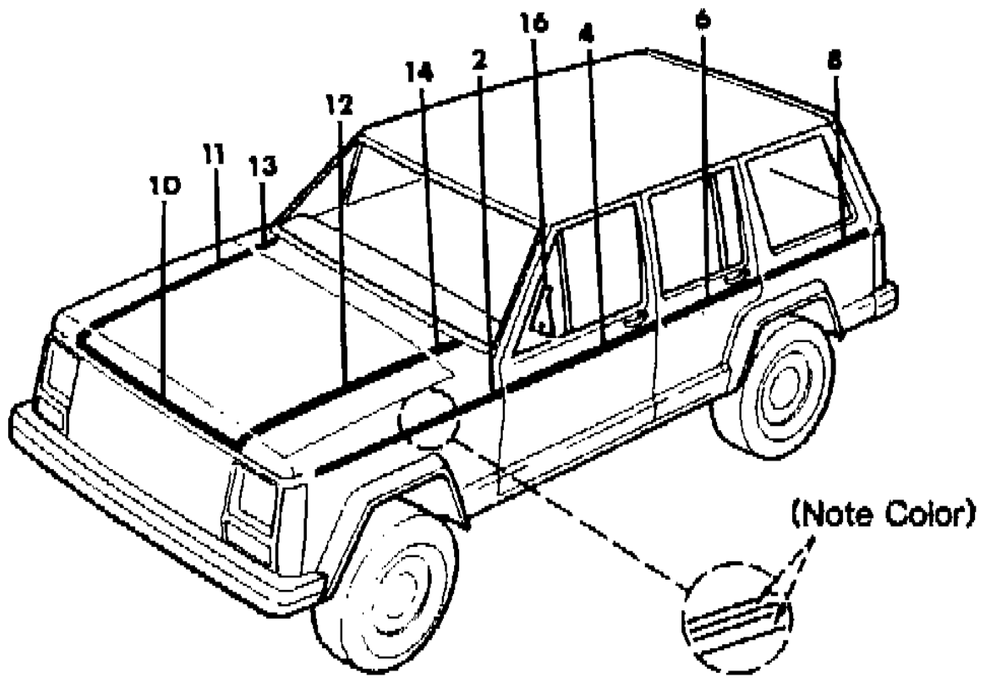

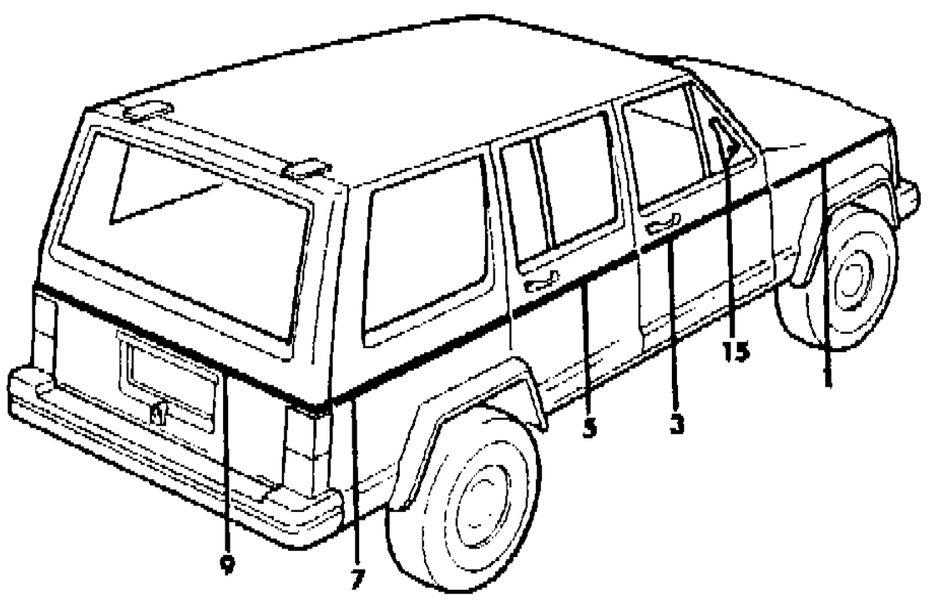

ITEM	PART NUMBER	QTY	BODY	MODEL	DESCRIPTION
1-2					DECAL, Fender
	5500 5990-1	1			Dark Blue
	5500 5972-3	1			Dark Red
	5500 5952-3	1			Gold
3-4					DECAL, Door
	5500 5992-3	1			Dark Blue
	5500 5974-5	1			Dark Red
	5500 5954-5	1			Gold
5-6					DECAL, Door
	5500 5994-5	1			Dark Blue
	5500 5976-7	1			Dark Red
	5500 5956-7	1			Gold
7-8					DECAL, Rear Quarter
	5500 5996-7	1			Dark Blue
	5500 5978-9	1			Dark Red
	5500 5958-9	1			Gold
9					DECAL, Lift Door
	5500 5985	1			Dark Blue
	5500 5967	1			Dark Red
	5500 5947	1			Gold
10					DECAL, Grille Panel
	5500 5984	1			Dark Blue
	5500 5966	1			Dark Red
	5500 5946	1			Gold
11-12					DECAL, Hood
	5500 5986-7	1			Dark Blue
	5500 5968-9	1			Dark Red
	5500 5948-9	1			Gold
13-14					DECAL, Cowl
	5500 5988-9	1			Dark Blue
	5500 5970-1	1			Dark Red
	5500 5950-1	1			Gold
15-16	5500 6220-1	1			DECAL, Door, Black

MODEL CODES

16=Cherokee 2 Dr.(1981-83)
17=Cherokee 2 Dr.(1981-83)
73=Cherokee 2WD-2 Dr.(1984-86)
74=Cherokee 2WD-4 Dr.(1984-86)
18=Cherokee 4 Dr.(1981-83)
77=Cherokee 4WD-2 Dr.(1984-86)
78=Cherokee 4WD-4 Dr.(1984-86)
85=CJ-5 (1981-83)
86=CJ-6(1981)
87=CJ-7(1981-86)
88=CJ-8, Scrambler(1981-86)
64=Comanche 2WD-6 Ft. Box(1986)
66=Comanche 2WD-7 Ft. Box(1986)
63=Comanche 4WD-6 Ft. Box(1986)
65=Comanche 4WD-7 Ft. Box(1986)
15=Grand Wagoneer 4 Dr.(1984-86)
25=J-10 Truck 7 Ft. Box(1981-84)
26=J10 Truck 8 Ft. Box(1981-86)
27=J-20 Truck 8 Ft. Box(1981-86)
15=Wagoneer 4 Dr.(1981-83)
75=Wagoneer 4WD-4 Dr.(1984-86)

BODY
CJ=CJ-5, CJ-6, CJ-7, CJ-8, Scrambler(1981-86)
MJ=Comanche Pickup(1986)

STYLES
SJ=Wagoneer(1981-83), Grand Wagoneer(1984-86), Cherokee(1981-83), J-10, J-20(1981-86)
XJ=Wagoneer(1984-86), Cherokee(1984-86)

AR = Use as Required - = Non Illustrated Part P.A.R. = Paint as Required

« RETURN TO GROUP INDEX

DECALS, EXTERIOR 2 TONE, 1986 XJ WAGONEER
Figure 23-5900

81J68 5900

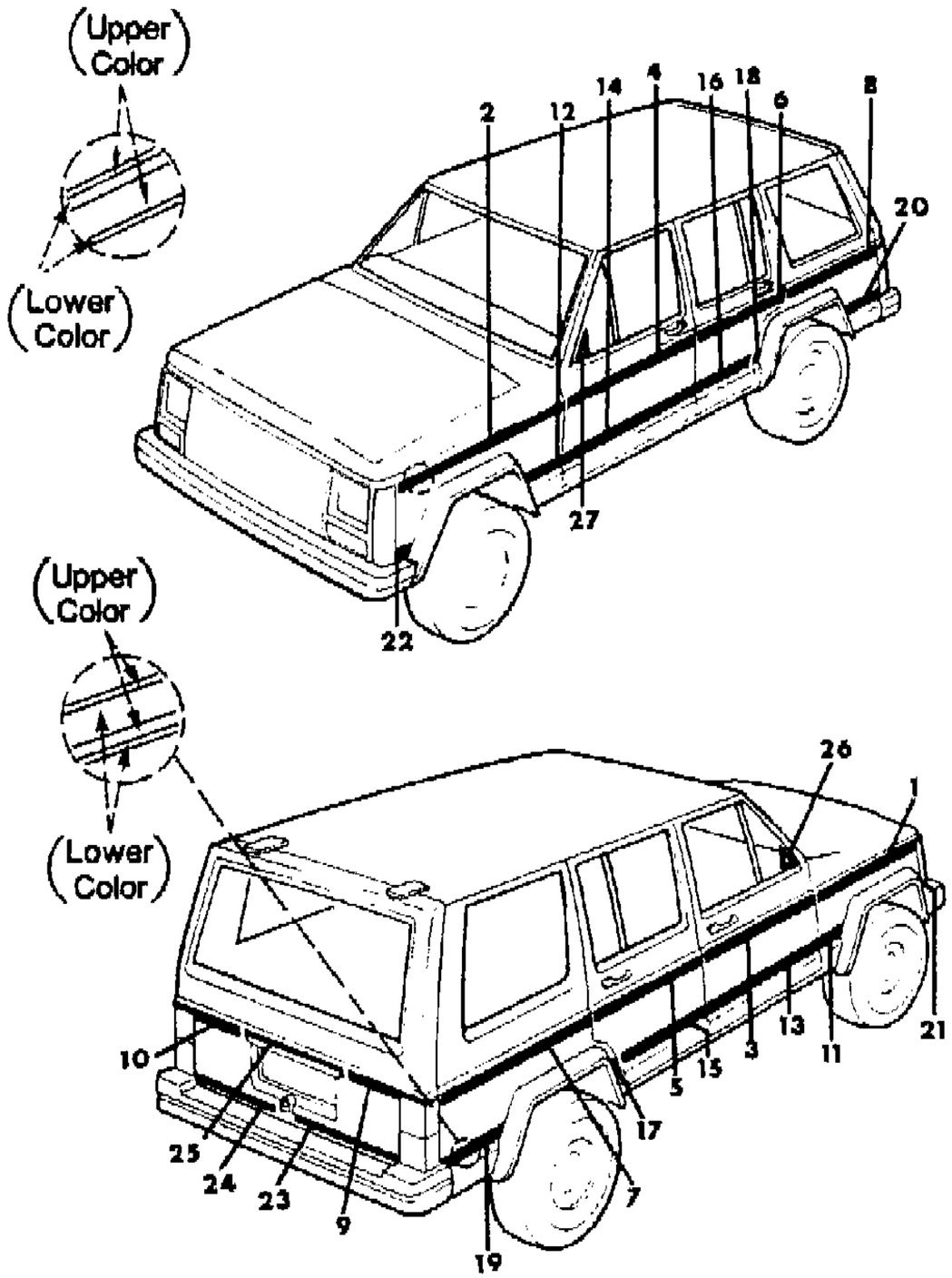

ITEM	PART NUMBER	QTY	BODY	MODEL	DESCRIPTION
1-2					DECAL, Fender
	5501 2638-9	1			Beige/Dark Honey/Beige/Dark Honey
	5501 4174-5	1			Beige/Dark Blue/Beige/Dark Blue
	5501 2644-5	1			Black/Garnet/Black/Garnet
	5501 3642-3	1			Sterling/Charcoal/Sterling/Charcoal
3-4					DECAL, Door
	5501 2630-1	1			Beige/Dark Honey/Beige/Dark Honey
	5501 4172-3	1			Beige/Dark Blue/Beige/Dark Blue
	5501 2636-7	1			Black/Garnet/Black/Garnet
	5501 2634-5	1			Sterling/Charcoal/Sterling/Charcoal
5-6					DECAL, Door
	5501 2758-9	1			Beige/Dark Honey/Beige/Dark Honey
	5501 4214-5	1			Beige/Dark Blue/Beige/Dark Blue
	5501 2764-5	1			Black/Garnet/Black/Garnet
	5501 2762-3	1			Sterling/Charcoal/Sterling/Charcoal
7-8					DECAL, Rear Quarter
	5501 2750-1	1			Beige/Dark Honey/Beige/Dark Honey
	5501 4212-3	1			Beige/Dark Blue/Beige/Dark Blue
	5501 2756-7	1			Black/Garnet/Black/Garnet
	5501 2754-5	1			Sterling/Charcoal/Sterling/Charcoal
9-10					DECAL, Lift Door
	5501 2700-1	1			Beige/Dark Honey/Beige/Dark Honey
	5501 4210-1	1			Beige/Dark Blue/Beige/Dark Blue
	5501 2706-7	1			Black/Garnet/Black/Garnet
	5501 2704-5	1			Sterling/Charcoal/Sterling/Charcoal
11-12					DECAL, Fender
	5501 3356-7	1			Dark Honey/Beige/Dark Honey/Beige
	5501 4200-1	1			Dark Blue/ Beige/Dark Blue/Beige
	5501 3360-1	1			Garnet/Black/Garnet/Black
	5501 3362-3	1			Charcoal/Sterling/Charcoal/Sterling
13-14					DECAL, Door
	5501 2786-7	1			Dark Honey/Beige/Dark Honey/Beige
	5501 4198-9	1			Dark Blue/Beige/Dark Blue/Beige
	5501 2790-1	1			Garnet/Black/Garnet/Black
	5501 3316-7	1			Charcoal/Sterling/Charcoal/Sterling
15-16					DECAL, Door
	5501 2774-5	1			Dark Honey/Beige/Dark Honey/Beige
	5501 4268-9	1			Dark Blue/Beige/Dark Blue/Beige
	5501 2778-9	1			Garnet/Black/Garnet/Black

MODEL CODES

16=Cherokee 2 Dr.(1981-83)
17=Cherokee 2 Dr.(1981-83)
73=Cherokee 2WD-2 Dr.(1984-86)
74=Cherokee 2WD-4 Dr.(1984-86)
18=Cherokee 4 Dr.(1981-83)
77=Cherokee 4WD-2 Dr.(1984-86)
78=Cherokee 4WD-4 Dr.(1984-86)
85=CJ-5 (1981-83)
86=CJ-6(1981)
87=CJ-7(1981-86)
88=CJ-8, Scrambler(1981-86)
64=Comanche 2WD-6 Ft. Box(1986)
66=Comanche 2WD-7 Ft. Box(1986)
63=Comanche 4WD-6 Ft. Box(1986)
65=Comanche 4WD-7 Ft. Box(1986)
15=Grand Wagoneer 4 Dr.(1984-86)
25=J-10 Truck 7 Ft. Box(1981-84)
26=J10 Truck 8 Ft. Box(1981-86)
27=J-20 Truck 8 Ft. Box(1981-86)
15=Wagoneer 4 Dr.(1981-83)
75=Wagoneer 4WD-4 Dr.(1984-86)

BODY
CJ=CJ-5, CJ-6, CJ-7, CJ-8, Scrambler(1981-86)
MJ=Comanche Pickup(1986)

STYLES
SJ=Wagoneer(1981-83), Grand Wagoneer(1984-86), Cherokee(1981-83), J-10, J-20(1981-86)
XJ=Wagoneer(1984-86), Cherokee(1984-86)

AR = Use as Required - = Non Illustrated Part P.A.R. = Paint as Required

DECALS, EXTERIOR 2 TONE, 1986 XJ WAGONEER
Figure 23-5900

81J68 5900

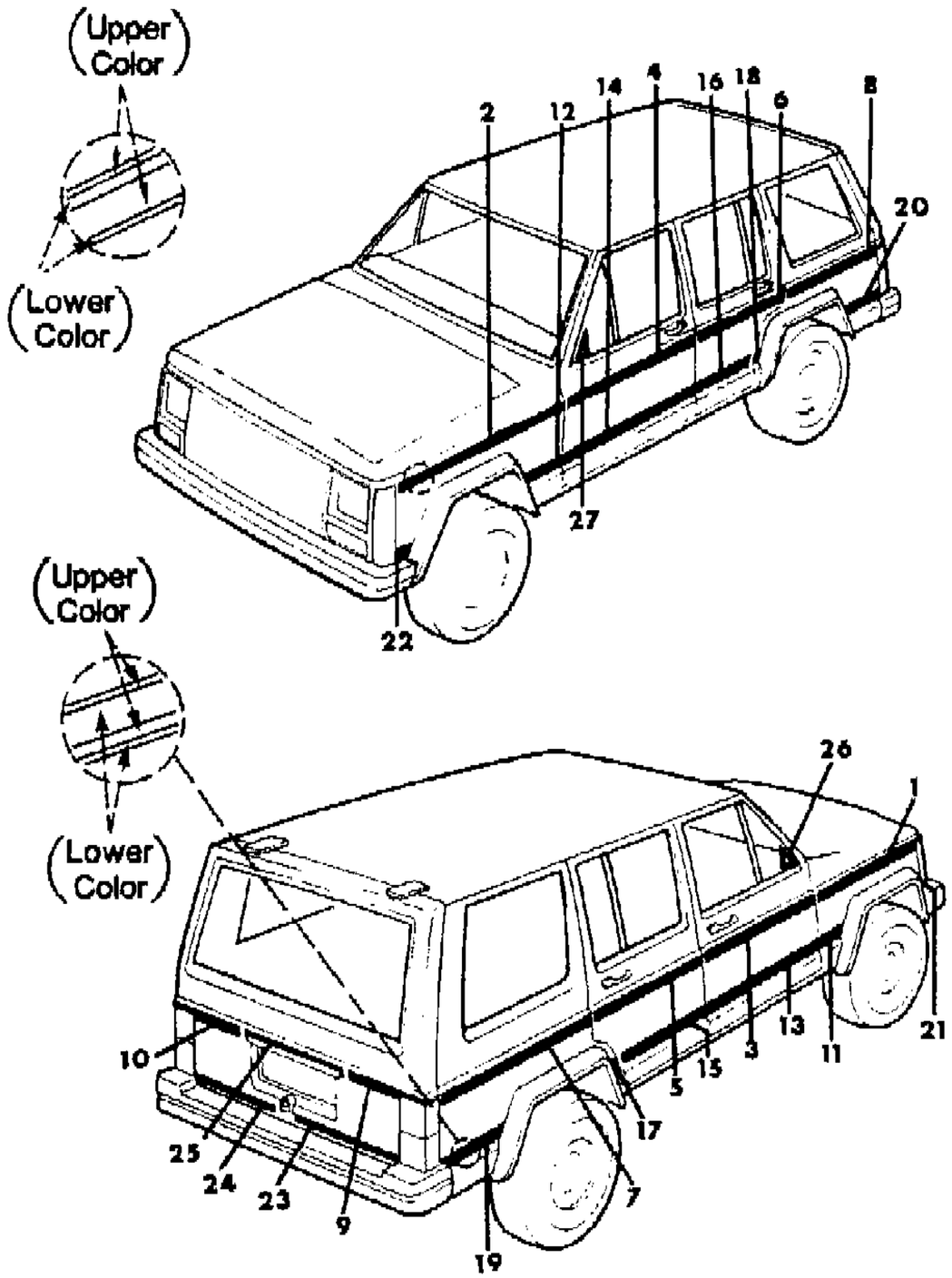

ITEM	PART NUMBER	QTY	BODY	MODEL	DESCRIPTION
	5501 3314-5	1			Charcoal/Sterling/Charcoal/Sterling
17-18					DECAL, Rear Quarter
	5501 2766-7	1			Dark Honey/Beige/Dark Honey/Beige
	5501 4266-7	1			Dark Blue/Beige/Dark Blue/Beige
	5501 2772-3	1			Garnet/Black/Garnet/Black
	5501 2770-1	1			Charcoal/Sterling/Charcoal/Sterling
19-20					DECAL, Rear Quarter
	5501 3364-5	1			Dark Honey/Beige/Dark Honey/Beige
	5501 4270-1	1			Dark Blue/Beige/Dark Blue/Beige
	5501 3368-9	1			Garnet/Black/Garnet/Black
	5501 3370-1	1			Charcoal/Sterling, Charcoal, Sterling
21-22					DECAL, Fender
	5501 2622-3	1			Dark Honey/Beige/Dark Honey/Beige
	5501 4202-3	1			Dark Blue/Beige/Dark Blue/Beige
	5501 2628-9	1			Garnet/Black/Garnet/Black
	5501 2626-7	1			Charcoal/Sterling/Charcoal/Sterling
23-24					DECAL, Lift Door
	5501 2780-1	1			Dark Honey/Biege/Dark Honey/Beige
	5501 4264-5	1			Dark Blue/Beige/Dark Blue/Beige
	5501 2784-5	1			Garnet/Black/Garnet/Black
	5501 3312-3	1			Charcoal/Sterling/Charcoal/Sterling
25					DECAL, Lift Door
	5501 2746	1			Dark Honey
	5501 4205	1			Dark Blue
	5501 2749	1			Garnet
	5501 2748	1			Charcoal
26-27	5500 6220-1	1			DECAL, Door, Black

MODEL CODES

16=Cherokee 2 Dr.(1981-83)
17=Cherokee 2 Dr.(1981-83)
73=Cherokee 2WD-2 Dr.(1984-86)
74=Cherokee 2WD-4 Dr.(1984-86)
18=Cherokee 4 Dr.(1981-83)
77=Cherokee 4WD-2 Dr.(1984-86)
78=Cherokee 4WD-4 Dr.(1984-86)
85=CJ-5 (1981-83)
86=CJ-6(1981)
87=CJ-7(1981-86)
88=CJ-8, Scrambler(1981-86)
64=Comanche 2WD-6 Ft. Box(1986)
66=Comanche 2WD-7 Ft. Box(1986)
63=Comanche 4WD-6 Ft. Box(1986)
65=Comanche 4WD-7 Ft. Box(1986)
15=Grand Wagoneer 4 Dr.(1984-86)
25=J-10 Truck 7 Ft. Box(1981-84)
26=J10 Truck 8 Ft. Box(1981-86)
27=J-20 Truck 8 Ft. Box(1981-86)
15=Wagoneer 4 Dr.(1981-83)
75=Wagoneer 4WD-4 Dr.(1984-86)

BODY
CJ=CJ-5, CJ-6, CJ-7, CJ-8, Scrambler(1981-86)
MJ=Comanche Pickup(1986)

STYLES
SJ=Wagoneer(1981-83), Grand Wagoneer(1984-86), Cherokee(1981-83), J-10, J-20(1981-86)
XJ=Wagoneer(1984-86), Cherokee(1984-86)

AR = Use as Required - = Non Illustrated Part P.A.R. = Paint as Required

« RETURN TO GROUP INDEX

NAMEPLATES, COMANCHE
Figure 23-6000

81J68 6000

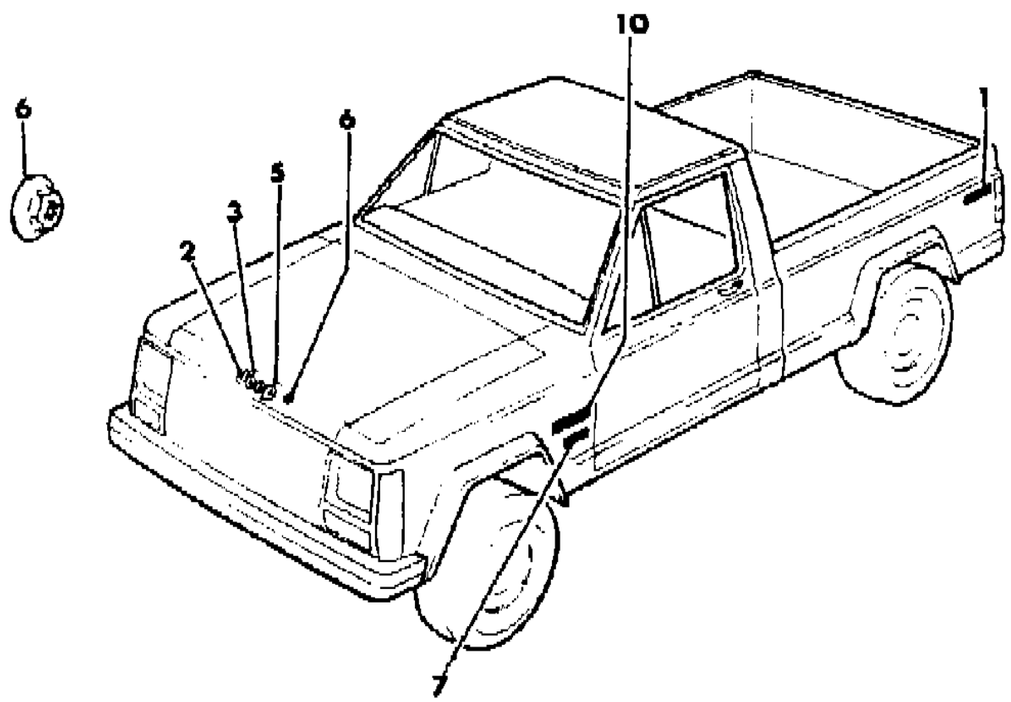

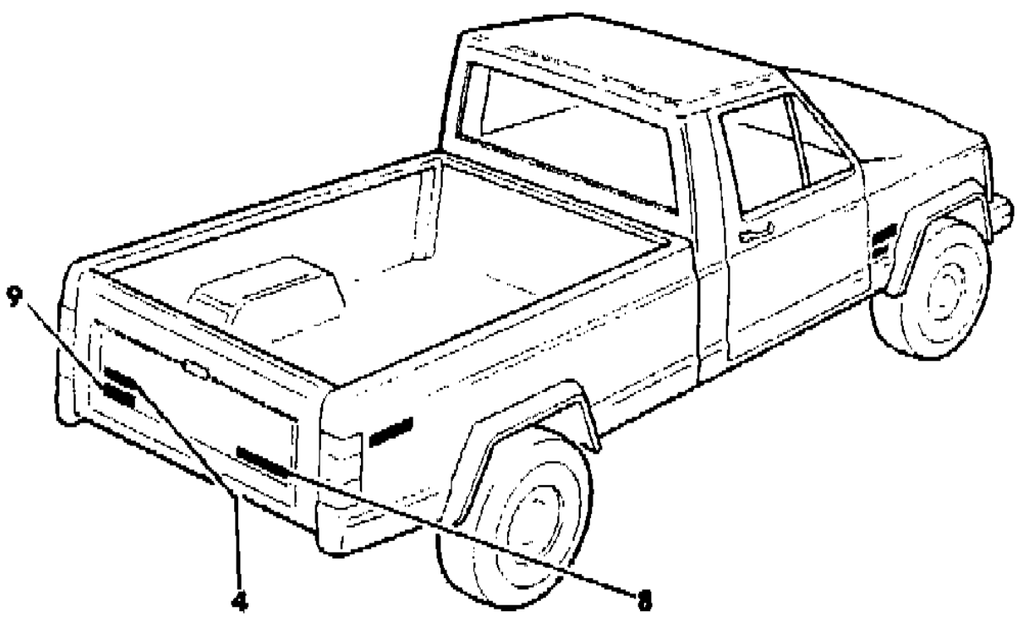

ITEM	PART NUMBER	QTY	BODY	MODEL	DESCRIPTION
1	5500 7817	2			NAMEPLATE, "4X4"
2	5501 0901	1			NAMEPLATE, "J"
3	5501 0902	2			NAMEPLATE, "e"
4					NAMEPLATE
	5501 0893	1			"2.5 Litre"
	5501 0894	1			"V6 2.8L"
	5501 0895	1			"Turbo Diesel"
	5501 0037	1			NAMEPLATE, "4.0 Litre"
5	5501 0903	1			NAMEPLATE, "p"
6	1150 2557	4			NUT
7					NAMEPLATE
	5501 0898	2			"Pioneer"
	5501 0899	2			"Laredo"
	5500 6184	2			"X"
	5500 6183	2			"XLS"
	5500 6183	2			"Custom"
8					NAMEPLATE
	5501 3576	1			"Metric Ton"
	5500 8339	1			"Command Trac"
	5501 0896	1			"Selec Trac"
9	5500 8338	1			NAMEPLATE, "Fuel Injection"
10	5500 6182	2			NAMEPLATE, "Comanche"

MODEL CODES

16=Cherokee 2 Dr.(1981-83)
17=Cherokee 2 Dr.(1981-83)
73=Cherokee 2WD-2 Dr.(1984-86)
74=Cherokee 2WD-4 Dr.(1984-86)
18=Cherokee 4 Dr.(1981-83)
77=Cherokee 4WD-2 Dr.(1984-86)
78=Cherokee 4WD-4 Dr.(1984-86)
85=CJ-5 (1981-83)
86=CJ-6(1981)
87=CJ-7(1981-86)
88=CJ-8, Scrambler(1981-86)
64=Comanche 2WD-6 Ft. Box(1986)
66=Comanche 2WD-7 Ft. Box(1986)
63=Comanche 4WD-6 Ft. Box(1986)
65=Comanche 4WD-7 Ft. Box(1986)
15=Grand Wagoneer 4 Dr.(1984-86)
25=J-10 Truck 7 Ft. Box(1981-84)
26=J10 Truck 8 Ft. Box(1981-86)
27=J-20 Truck 8 Ft. Box(1981-86)
15=Wagoneer 4 Dr.(1981-83)
75=Wagoneer 4WD-4 Dr.(1984-86)

BODY
CJ=CJ-5, CJ-6, CJ-7, CJ-8, Scrambler(1981-86)
MJ=Comanche Pickup(1986)

STYLES
SJ=Wagoneer(1981-83), Grand Wagoneer(1984-86), Cherokee(1981-83), J-10, J-20(1981-86)
XJ=Wagoneer(1984-86), Cherokee(1984-86)

AR = Use as Required - = Non Illustrated Part P.A.R. = Paint as Required

« RETURN TO GROUP INDEX

MOULDINGS, EXTERIOR, UPPER COMANCHE
Figure 23-6100

81J68 6100

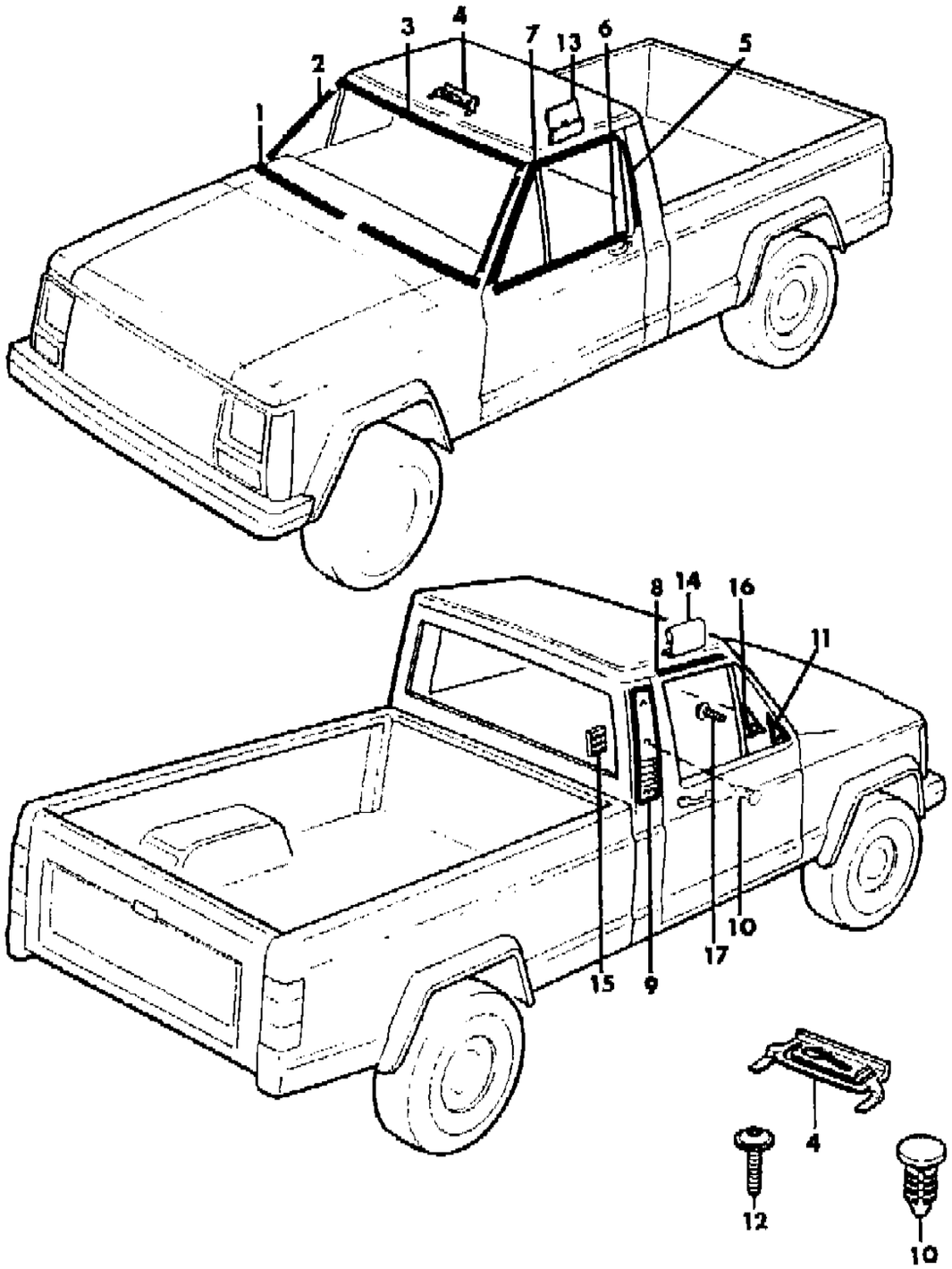

ITEM	PART NUMBER	QTY	BODY	MODEL	DESCRIPTION
1					MOULDING, Windshield, P.A.R.
	5500 6380	1			Right
	5500 2509	1			Left
2	5500 0546-7	1			MOULDING, Windshield, P.A.R.
3	5500 0544	1			MOULDING, Windshield, P.A.R.
4	J400 6211	26			CLIP
5					MOULDING, Door
	5500 5324-5	1			Chrome
	5500 5282-3	1			Black
6					Moulding, Door ***
	5500 5270-1	1			Chrome
	5500 5284-5	1			Black
7					MOULDING, Door
	5500 5320-1	1			Chrome
	5500 5278-9	1			Black
8					MOULDING, Drip
	5501 3670-1	1			Chrome-metal
	5500 7598-9	1			Chrome-plastic
	5500 7600-1	1			Black-plastic
9	5500 9294-5	1			APPLIQUE, Cab, Rear Quarter
10	3420 2335	8			FASTENER
11	5500 5312-3	1			COVER, used in place of mirror
12	3420 1957	4			SCREW
13	5500 5384	AR			CLIP
14	3500 2115	AR			CLIP
15	5500 7673	2			EXHAUSTER, Pillar, Air ***
16	5500 5430-1	1			GASKET
17	3420 1957	2			SCREW

MODEL CODES

16=Cherokee 2 Dr.(1981-83)
17=Cherokee 2 Dr.(1981-83)
73=Cherokee 2WD-2 Dr.(1984-86)
74=Cherokee 2WD-4 Dr.(1984-86)
18=Cherokee 4 Dr.(1981-83)
77=Cherokee 4WD-2 Dr.(1984-86)
78=Cherokee 4WD-4 Dr.(1984-86)
85=CJ-5 (1981-83)
86=CJ-6(1981)
87=CJ-7(1981-86)
88=CJ-8, Scrambler(1981-86)
64=Comanche 2WD-6 Ft. Box(1986)
66=Comanche 2WD-7 Ft. Box(1986)
63=Comanche 4WD-6 Ft. Box(1986)
65=Comanche 4WD-7 Ft. Box(1986)
15=Grand Wagoneer 4 Dr.(1984-86)
25=J-10 Truck 7 Ft. Box(1981-84)
26=J10 Truck 8 Ft. Box(1981-86)
27=J-20 Truck 8 Ft. Box(1981-86)
15=Wagoneer 4 Dr.(1981-83)
75=Wagoneer 4WD-4 Dr.(1984-86)

BODY
CJ=CJ-5, CJ-6, CJ-7, CJ-8, Scrambler(1981-86)
MJ=Comanche Pickup(1986)

STYLES
SJ=Wagoneer(1981-83), Grand Wagoneer(1984-86), Cherokee(1981-83), J-10, J-20(1981-86)
XJ=Wagoneer(1984-86), Cherokee(1984-86)

AR = Use as Required - = Non Illustrated Part P.A.R. = Paint as Required

« RETURN TO GROUP INDEX

MOULDINGS, EXTERIOR, LOWER COMANCHE
Figure 23-6200

81J68 6200

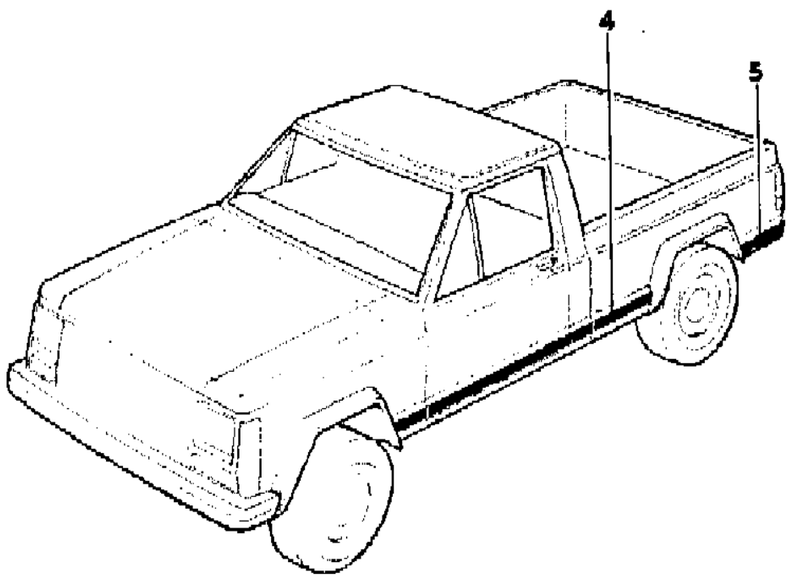

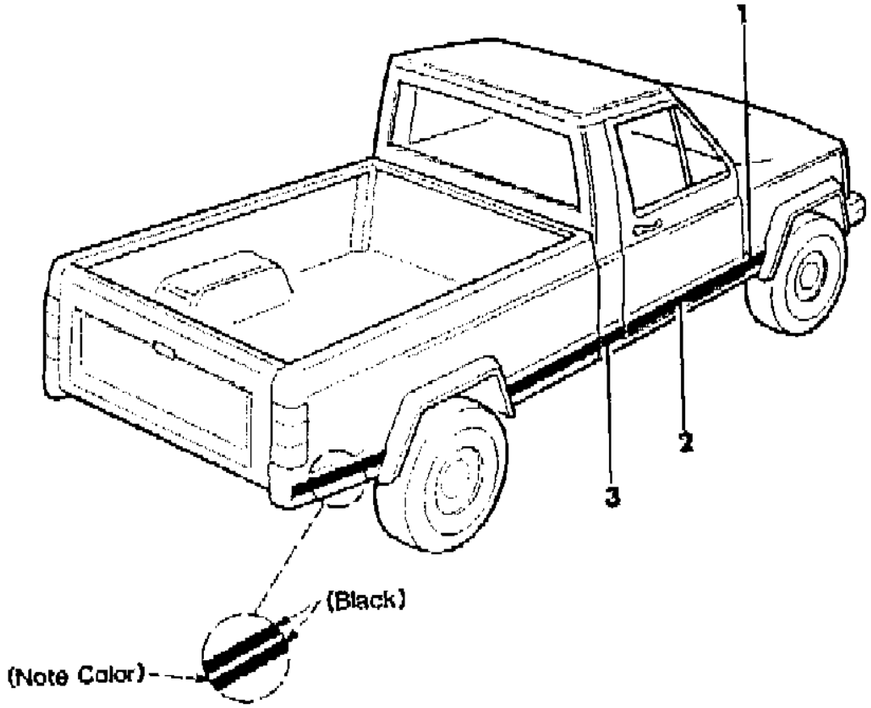

ITEM	PART NUMBER	QTY	BODY	MODEL	DESCRIPTION
1					MOULDING, Fender
	5500 3166-7	1			Chrome
	5500 3048-9	1			Black
2					MOULDING, Door
	5500 3168-9	1			Chrome
	5500 3050-1	1			Black
3					MOULDING, Cab Rear Quarter
	5500 6166-7	1			Chrome
	5500 6164-5	1			Black
4					MOULDING, Cargo Box
	5500 6170-1	1			Chrome, w/7' pickup box
	5500 9152-3	1			Chrome, w/6' pickup box
	5500 6168-9	1			Black
5					MOULDING, Cargo Box
	5500 6174-5	1			Chrome, w/7' pickup box
	5500 9154-5	1			Chrome, w/6' pickup box
	5500 6172-3	1			Black

MODEL CODES

16=Cherokee 2 Dr.(1981-83)
17=Cherokee 2 Dr.(1981-83)
73=Cherokee 2WD-2 Dr.(1984-86)
74=Cherokee 2WD-4 Dr.(1984-86)
18=Cherokee 4 Dr.(1981-83)
77=Cherokee 4WD-2 Dr.(1984-86)
78=Cherokee 4WD-4 Dr.(1984-86)
85=CJ-5 (1981-83)
86=CJ-6(1981)
87=CJ-7(1981-86)
88=CJ-8, Scrambler(1981-86)
64=Comanche 2WD-6 Ft. Box(1986)
66=Comanche 2WD-7 Ft. Box(1986)
63=Comanche 4WD-6 Ft. Box(1986)
65=Comanche 4WD-7 Ft. Box(1986)
15=Grand Wagoneer 4 Dr.(1984-86)
25=J-10 Truck 7 Ft. Box(1981-84)
26=J10 Truck 8 Ft. Box(1981-86)
27=J-20 Truck 8 Ft. Box(1981-86)
15=Wagoneer 4 Dr.(1981-83)
75=Wagoneer 4WD-4 Dr.(1984-86)

BODY
CJ=CJ-5, CJ-6, CJ-7, CJ-8, Scrambler(1981-86)
MJ=Comanche Pickup(1986)

STYLES
SJ=Wagoneer(1981-83), Grand Wagoneer(1984-86), Cherokee(1981-83), J-10, J-20(1981-86)
XJ=Wagoneer(1984-86), Cherokee(1984-86)

AR = Use as Required - = Non Illustrated Part P.A.R. = Paint as Required

« RETURN TO GROUP INDEX

DECALS, EXTERIOR BASE, COMANCHE
Figure 23-6300

81J68 6300

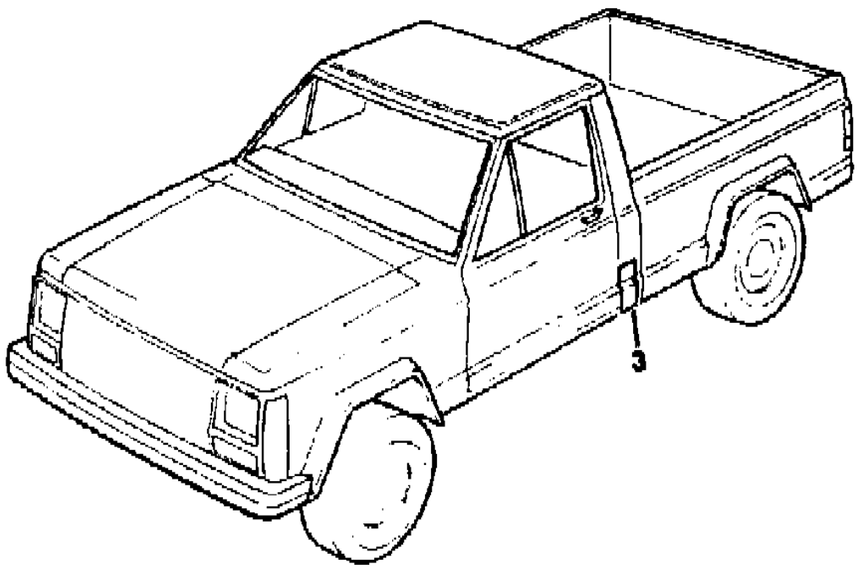

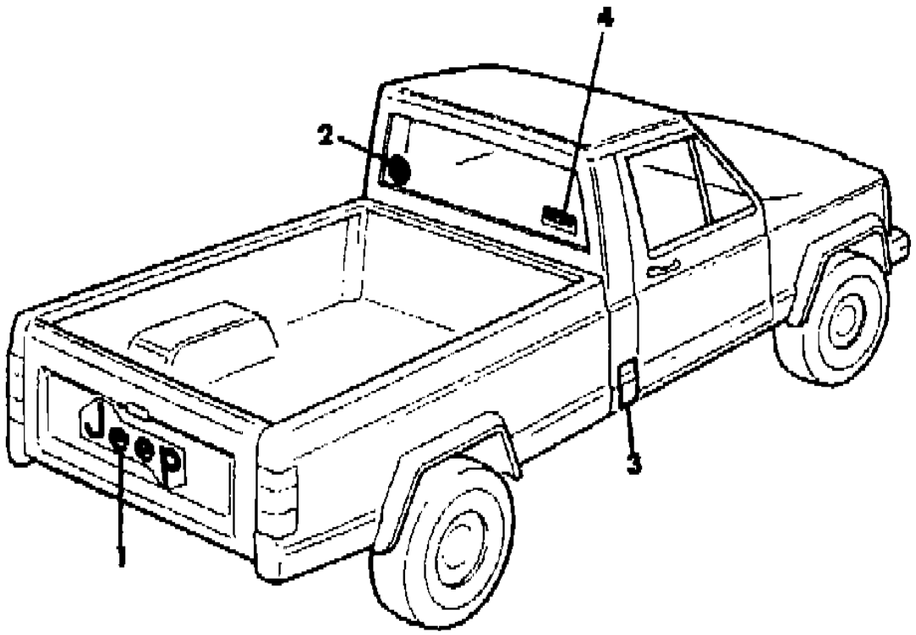

ITEM	PART NUMBER	QTY	BODY	MODEL	DESCRIPTION
1					DECAL, Tailgate
	5500 6262	1			Black
	5500 6263	1			White
2	5501 6564	1			DECAL, Off Road Package
3	3501 9114-5	1			APPLIQUE, Cab Rear Quarter
4	5501 5368	1			DECAL, Four Wheeler of The Year

MODEL CODES

16=Cherokee 2 Dr.(1981-83)
17=Cherokee 2 Dr.(1981-83)
73=Cherokee 2WD-2 Dr.(1984-86)
74=Cherokee 2WD-4 Dr.(1984-86)
18=Cherokee 4 Dr.(1981-83)
77=Cherokee 4WD-2 Dr.(1984-86)
78=Cherokee 4WD-4 Dr.(1984-86)
85=CJ-5 (1981-83)
86=CJ-6(1981)
87=CJ-7(1981-86)
88=CJ-8, Scrambler(1981-86)
64=Comanche 2WD-6 Ft. Box(1986)
66=Comanche 2WD-7 Ft. Box(1986)
63=Comanche 4WD-6 Ft. Box(1986)
65=Comanche 4WD-7 Ft. Box(1986)
15=Grand Wagoneer 4 Dr.(1984-86)
25=J-10 Truck 7 Ft. Box(1981-84)
26=J10 Truck 8 Ft. Box(1981-86)
27=J-20 Truck 8 Ft. Box(1981-86)
15=Wagoneer 4 Dr.(1981-83)
75=Wagoneer 4WD-4 Dr.(1984-86)

BODY
CJ=CJ-5, CJ-6, CJ-7, CJ-8, Scrambler(1981-86)
MJ=Comanche Pickup(1986)

STYLES
SJ=Wagoneer(1981-83), Grand Wagoneer(1984-86), Cherokee(1981-83), J-10, J-20(1981-86)
XJ=Wagoneer(1984-86), Cherokee(1984-86)

AR = Use as Required - = Non Illustrated Part P.A.R. = Paint as Required

« RETURN TO GROUP INDEX

DECALS, EXTERIOR 2 TONE CUSTOM COMANCHE
Figure 23-6400

81J68 6400

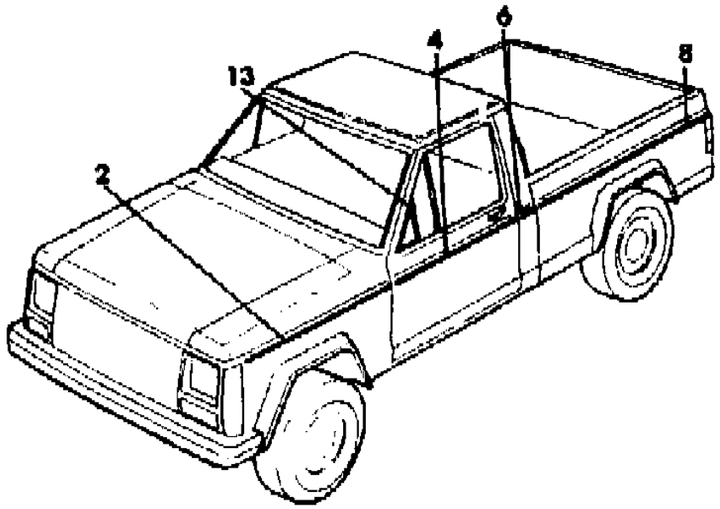

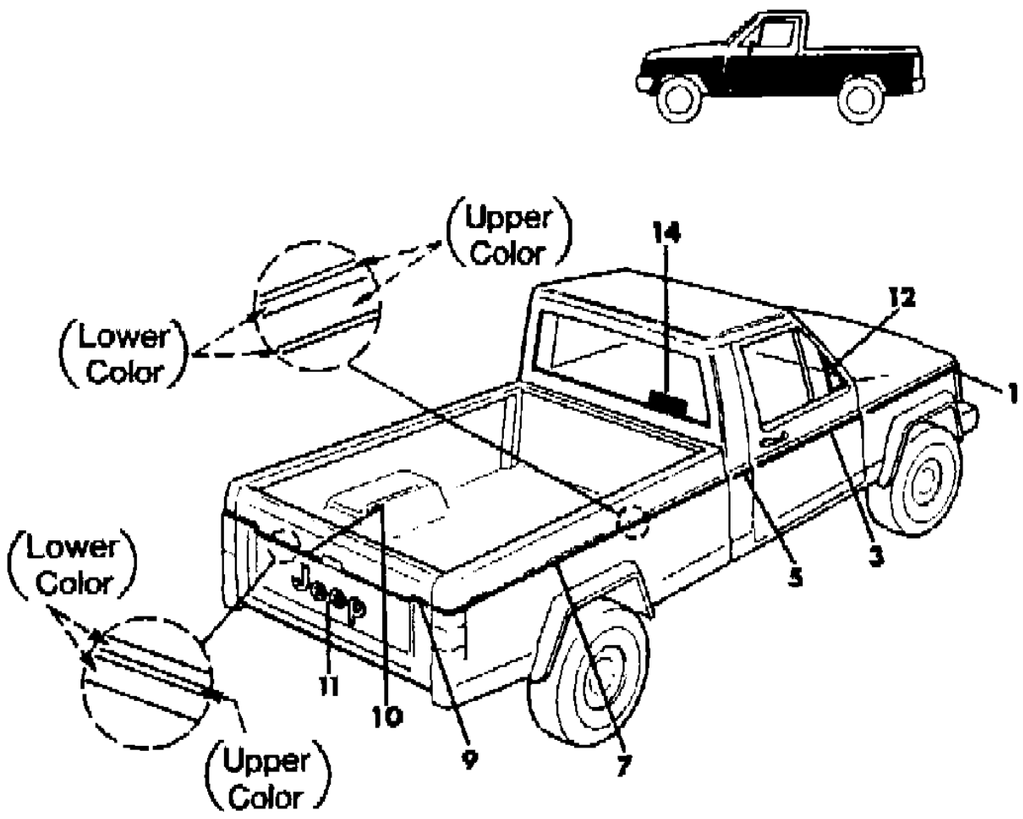

ITEM	PART NUMBER	QTY	BODY	MODEL	DESCRIPTION
1-2					DECAL, Fender
	5501 2638-9	1			Beige/Dark Honey/Beige/Dark Honey
	5501 4174-5	1			Beige/Dark Blue/Beige/Dark Blue
	5501 2644-5	1			Black/Garnet/Black/Garnet
	5501 2642-3	1			Sterling/Charcoal/Sterling/Charcoal
3-4					DECAL, Door
	5501 2630-1	1			Beige/Dark Honey/Beige/Dark Honey
	5501 4172-3	1			Beige/Dark Blue/Beige/Dark Blue
	5501 2636-7	1			Black/Garnet/Black/Garnet
	5501 2634-5	1			Sterling/Charcoal/Sterling/Charcoal
5-6					DECAL, Cab Rear Quarter
	5501 2656-7	1			Beige/Dark Honey/Beige/Dark Honey
	5501 4168-9	1			Beige/Dark Blue/Beige/Dark Blue
	5501 2662-3	1			Black/Garnet/Black/Garnet
	5501 2660-1	1			Sterling/Charcoal/Sterling/Charcoal
7-8					DECAL, Cargo Box Side
	5501 2648-9	1			Beige/Dark Honey/Beige/Dark Honey
	5501 4166-7	1			Beige/Dark Blue/Beige/Dark Blue
	5501 2654-5	1			Black/Garnet/Black/Garnet
	5501 2652-3	1			Sterling/Charcoal/Sterling/Charcoal
9-10					DECAL, Tailgate
	5501 3524-5	1			Beige/Dark Honey/Beige/Dark Honey
	5501 4170-1	1			Beige/Dark Blue/Beige/Dark Blue
	5501 3530-1	1			Black/Garnet/Black/Garnet
	5501 3528-9	1			Sterling/Charcoal/Sterling/Charcoal
11					DECAL, Jeep
	5501 3100	1			Beige
	5500 6262	1			Black
	5501 3102	1			Sterling
12-13	5500 6220-1	1			DECAL, Door, Black
14	5501 5368	1			DECAL, Four Wheeler of The Year

MODEL CODES

16=Cherokee 2 Dr.(1981-83)	78=Cherokee 4WD-4 Dr.(1984-86)	64=Comanche 2WD-6 Ft. Box(1986)	25=J-10 Truck 7 Ft. Box(1981-84)
17=Cherokee 2 Dr.(1981-83)	85=CJ-5 (1981-83)	66=Comanche 2WD-7 Ft. Box(1986)	26=J10 Truck 8 Ft. Box(1981-86)
73=Cherokee 2WD-2 Dr.(1984-86)	86=CJ-6(1981)	63=Comanche 4WD-6 Ft. Box(1986)	27=J-20 Truck 8 Ft. Box(1981-86)
74=Cherokee 2WD-4 Dr.(1984-86)	87=CJ-7(1981-86)	65=Comanche 4WD-7 Ft. Box(1986)	15=Wagoneer 4 Dr.(1981-83)
18=Cherokee 4 Dr.(1981-83)	88=CJ-8, Scrambler(1981-86)	15=Grand Wagoneer 4 Dr.(1984-86)	75=Wagoneer 4WD-4 Dr.(1984-86)
77=Cherokee 4WD-2 Dr.(1984-86)			

BODY
CJ=CJ-5, CJ-6, CJ-7, CJ-8, Scrambler(1981-86)
MJ=Comanche Pickup(1986)

STYLES
SJ=Wagoneer(1981-83), Grand Wagoneer(1984-86), Cherokee(1981-83), J-10, J-20(1981-86)
XJ=Wagoneer(1984-86), Cherokee(1984-86)

AR = Use as Required - = Non Illustrated Part P.A.R. = Paint as Required

« RETURN TO GROUP INDEX

DECALS, EXTERIOR 2 TONE SPORT TRUCK COMANCHE
Figure 23-6500

81J68 6500

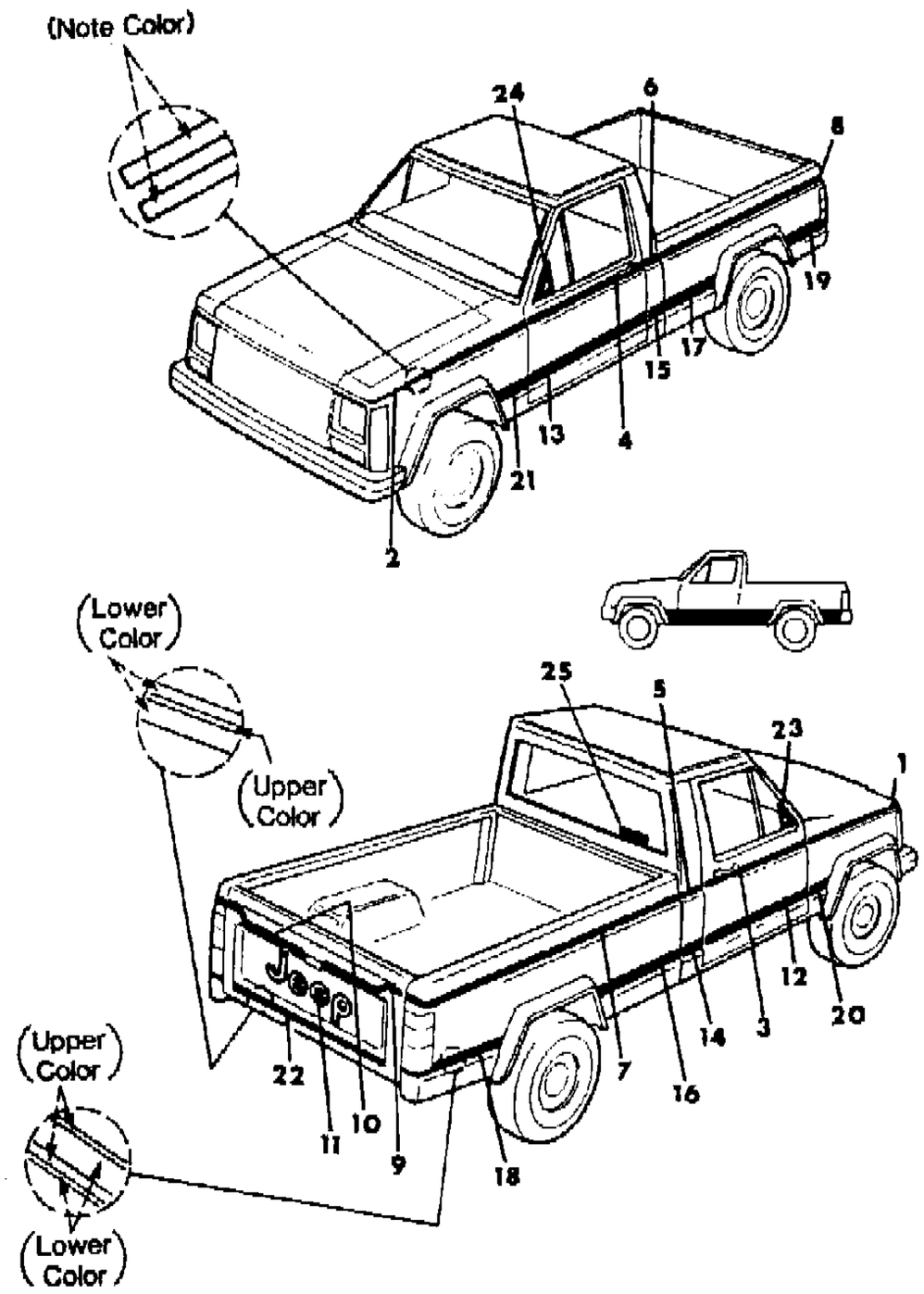

ITEM	PART NUMBER	QTY	BODY	MODEL	DESCRIPTION
1-2					DECAL, Fender
	5501 2854-5	1			Dark Honey
	5501 4156-7	1			Garnet
	5501 4134-5	1			Beige
	5501 2858-9	1			Charcoal
3-4					DECAL, Door
	5501 2860-1	1			Dark Honey
	5501 4158-9	1			Garnet
	5501 4136-7	1			Beige
	5501 2864-5	1			Charcoal
5-6					DECAL, Cab Rear Quarter
	5501 2866-7	1			Dark Honey
	5501 4160-1	1			Garnet
	5501 4138-9	1			Beige
	5501 2870-1	1			Charcoal
7-8					DECAL, Cargo Box Side
	5501 2872-3	1			Dark Honey
	5501 4162-3	1			Garnet
	5501 4140-1	1			Beige
	5501 2876-7	1			Charcoal
9-10					DECAL, Tailgate
	5501 3644-5	1			Dark Honey
	5501 3868-9	1			Garnet
	5501 3866-7	1			Beige
	5501 3648-9	1			Charcoal
11					DECAL, Jeep
	5501 3104	1			Dark Honey
	5501 4164	1			Garnet
	5501 3100	1			Beige
	5501 3106	1			Charcoal
12-13					DECAL, Door
	5501 3630-1	1			Beige/Dark Honey/Beige/Dark Honey
	5501 4152-3	1			Black/Garnet/Black/Garnet
	5501 4130-1	1			Dark Blue/Beige/Dark Blue/Beige
	5501 3632-3	1			Sterling/Charcoal/Sterling/Charcoal
14-15					DECAL, Cab, Rear Quarter
	5501 2672-3	1			Beige/Dark Honey/Beige/Dark Honey
	5501 4144-5	1			Black/Garnet/Black/Garnet
	5501 4122-3	1			Dark Blue/Beige/Dark Blue/Beige

MODEL CODES

16=Cherokee 2 Dr.(1981-83)
17=Cherokee 2 Dr.(1981-83)
73=Cherokee 2WD-2 Dr.(1984-86)
74=Cherokee 2WD-4 Dr.(1984-86)
18=Cherokee 4 Dr.(1981-83)
77=Cherokee 4WD-2 Dr.(1984-86)
78=Cherokee 4WD-4 Dr.(1984-86)
85=CJ-5 (1981-83)
86=CJ-6(1981)
87=CJ-7(1981-86)
88=CJ-8, Scrambler(1981-86)
64=Comanche 2WD-6 Ft. Box(1986)
66=Comanche 2WD-7 Ft. Box(1986)
63=Comanche 4WD-6 Ft. Box(1986)
65=Comanche 4WD-7 Ft. Box(1986)
15=Grand Wagoneer 4 Dr.(1984-86)
25=J-10 Truck 7 Ft. Box(1981-84)
26=J10 Truck 8 Ft. Box(1981-86)
27=J-20 Truck 8 Ft. Box(1981-86)
15=Wagoneer 4 Dr.(1981-83)
75=Wagoneer 4WD-4 Dr.(1984-86)

BODY
CJ=CJ-5, CJ-6, CJ-7, CJ-8, Scrambler(1981-86)
MJ=Comanche Pickup(1986)

STYLES
SJ=Wagoneer(1981-83), Grand Wagoneer(1984-86), Cherokee(1981-83), J-10, J-20(1981-86)
XJ=Wagoneer(1984-86), Cherokee(1984-86)

AR = Use as Required - = Non Illustrated Part P.A.R. = Paint as Required

DECALS, EXTERIOR 2 TONE SPORT TRUCK COMANCHE
Figure 23-6500

81J68 6500

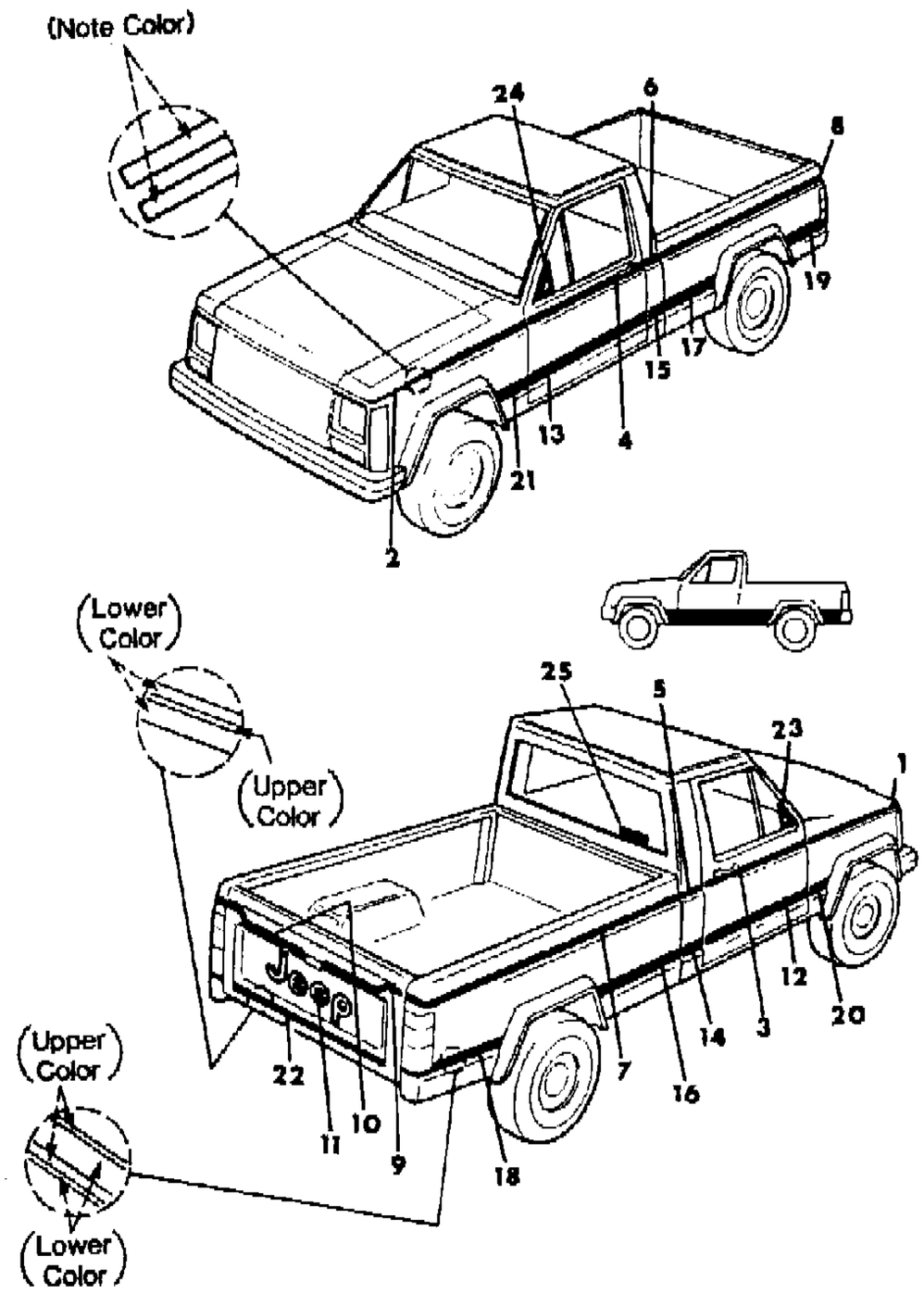

ITEM	PART NUMBER	QTY	BODY	MODEL	DESCRIPTION
	5501 2676-7	1			Sterling/Charcoal/Sterling/Charcoal
16-17					DECAL, Cargo Box Side
	5501 2680-1	1			Beige/Dark Honey/Beige/Dark Honey
	5501 4146-7	1			Black/Garnet/Black/Garnet
	5501 4124-5	1			Dark Blue/Beige/Dark Blue/Beige
	5501 2684-5	1			Sterling/Charcoal/Sterling/Charcoal
18-19					DECAL, Cargo Box Side
	5501 2688-9	1			Beige/Dark Honey/Beige/Dark Honey
	5501 4148-9	1			Black/Garnet/Black/Garnet
	5501 4126-7	1			Dark Blue/Beige/Dark Blue/Beige
	5501 2692-3	1			Sterling/Charcoal/Sterling/Charcoal
20-21					DECAL, Fender
	5501 2614-5	1			Beige/Dark Honey/Beige/Dark Honey
	5501 4154-5	1			Black/Garnet/Black/Garnet
	5501 4132-3	1			Dark Blue/Beige/Dark Blue/Beige
	5501 2618-9	1			Sterling/Charcoal/Sterling/Charcoal
22					DECAL, Tailgate
	5501 2696	1			Beige/Dark Honey/Beige/Dark Honey
	5501 4150	1			Black/Garnet/Black/Garnet
	5501 4128	1			Dark Blue/Beige/Dark Blue/Beige
	5501 2698	1			Sterling/Charcoal/Sterling/Charcoal
23-24	5500 6220-1	1			DECAL, Door, Black
25	5501 5368	1			DECAL, Four Wheeler of The Year

MODEL CODES

16=Cherokee 2 Dr.(1981-83)
17=Cherokee 2 Dr.(1981-83)
73=Cherokee 2WD-2 Dr.(1984-86)
74=Cherokee 2WD-4 Dr.(1984-86)
18=Cherokee 4 Dr.(1981-83)
77=Cherokee 4WD-2 Dr.(1984-86)
78=Cherokee 4WD-4 Dr.(1984-86)
85=CJ-5 (1981-83)
86=CJ-6(1981)
87=CJ-7(1981-86)
88=CJ-8, Scrambler(1981-86)
64=Comanche 2WD-6 Ft. Box(1986)
66=Comanche 2WD-7 Ft. Box(1986)
63=Comanche 4WD-6 Ft. Box(1986)
65=Comanche 4WD-7 Ft. Box(1986)
15=Grand Wagoneer 4 Dr.(1984-86)
25=J-10 Truck 7 Ft. Box(1981-84)
26=J10 Truck 8 Ft. Box(1981-86)
27=J-20 Truck 8 Ft. Box(1981-86)
15=Wagoneer 4 Dr.(1981-83)
75=Wagoneer 4WD-4 Dr.(1984-86)

BODY
CJ=CJ-5, CJ-6, CJ-7, CJ-8, Scrambler(1981-86)
MJ=Comanche Pickup(1986)

STYLES
SJ=Wagoneer(1981-83), Grand Wagoneer(1984-86), Cherokee(1981-83), J-10, J-20(1981-86)
XJ=Wagoneer(1984-86), Cherokee(1984-86)

AR = Use as Required - = Non Illustrated Part P.A.R. = Paint as Required

DECALS, EXTERIOR 2 TONE, PREMIUM COMANCHE
Figure 23-6600

81J68 6600

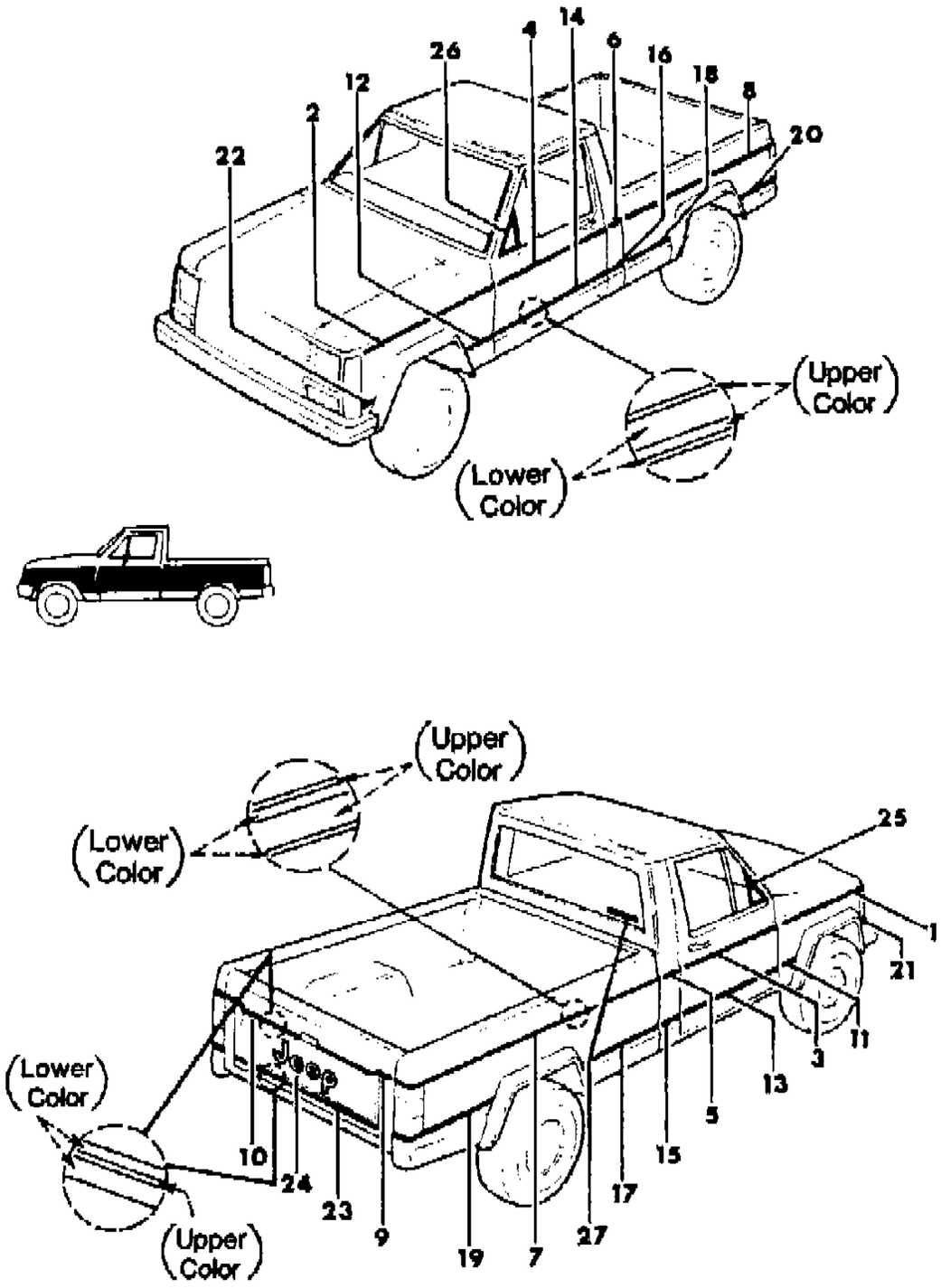

ITEM	PART NUMBER	QTY	BODY	MODEL	DESCRIPTION
1-2					DECAL, Fender
	5501 2638-9	1			Beige/Dark Honey/Beige/Dark Honey
	5501 4174-5	1			Beige/Dark Blue/Beige/Dark Blue
	5501 2644-5	1			Black/Garnet/Black/Garnet
	5501 2642-3	1			Sterling/Charcoal/Sterling/Charcoal
3-4					DECAL, Door
	5501 2630-1	1			Beige/Dark Honey/Beige/Dark Honey
	5501 4172-3	1			Beige/Dark Blue/Beige/Dark Blue
	5501 2636-7	1			Black/Garnet/Black/Garnet
	5501 2634-5	1			Sterling/Charcoal/Sterling/Charcoal
5-6					DECAL, Cab, Rear Quarter
	5501 2656-7	1			Beige/Dark Honey/Beige/Dark Honey
	5501 4168-9	1			Beige/Dark Blue/Beige/Dark Blue
	5501 2662-3	1			Black/Garnet/Black/Garnet
	5501 2660-1	1			Charcoal/Sterling/Charcoal/Sterling
7-8					DECAL, Cargo Box Side
	5501 2648-9	1			Beige/Dark Honey/Beige/Dark Honey
	5501 4166-7	1			Beige/Dark Blue/Beige/Dark Blue
	5501 2654-5	1			Black/Garnet/Black/Garnet
	5501 2652-3	1			Sterling/Charcoal/Sterling/Charcoal
9-10					DECAL, Tailgate
	5501 3524-5	1			Beige/Dark Honey/Beige/Dark Honey
	5501 4170-1	1			Beige/Dark Blue/Beige/Dark Blue
	5501 3530-1	1			Black/Garnet/Black/Garnet
	5501 3528-9	1			Sterling/Charcoal/Sterling/Charcoal
11-12					DECAL, Fender
	5501 3356-7	1			Dark Honey/Beige/Dark Honey/Beige
	5501 4132-3	1			Dark Blue/Beige/Dark Blue/Beige
	5501 3360-1	1			Garnet/Black/Garnet/Black
	5501 3362-3	1			Charcoal/Sterling/Charcoal/Sterling
13-14					DECAL, Door
	5501 2786-7	1			Dark Honey/Beige/Dark Honey/Beige
	5501 4130-1	1			Dark Blue/Beige/Dark Blue/Beige
	5501 2790-1	1			Garnet/Black/Garnet/Black
	5501 3316-7	1			Charcoal/Sterling/Charcoal/Sterling
15-16					DECAL, Cab Rear Quarter
	5501 3372-3	1			Dark Honey/Beige/Dark Honey/Beige
	5501 4122-3	1			Dark Blue/Beige/Dark Blue/Beige
	5501 3378-9	1			Garnet/Black/Garnet/Black

MODEL CODES
16=Cherokee 2 Dr.(1981-83)
17=Cherokee 2 Dr.(1981-83)
73=Cherokee 2WD-2 Dr.(1984-86)
74=Cherokee 2WD-4 Dr.(1984-86)
18=Cherokee 4 Dr.(1981-83)
77=Cherokee 4WD-2 Dr.(1984-86)
78=Cherokee 4WD-4 Dr.(1984-86)
85=CJ-5 (1981-83)
86=CJ-6(1981)
87=CJ-7(1981-86)
88=CJ-8, Scrambler(1981-86)
64=Comanche 2WD-6 Ft. Box(1986)
66=Comanche 2WD-7 Ft. Box(1986)
63=Comanche 4WD-6 Ft. Box(1986)
65=Comanche 4WD-7 Ft. Box(1986)
15=Grand Wagoneer 4 Dr.(1984-86)
25=J-10 Truck 7 Ft. Box(1981-84)
26=J10 Truck 8 Ft. Box(1981-86)
27=J-20 Truck 8 Ft. Box(1981-86)
15=Wagoneer 4 Dr.(1981-83)
75=Wagoneer 4WD-4 Dr.(1984-86)

BODY
CJ=CJ-5, CJ-6, CJ-7, CJ-8, Scrambler(1981-86)
MJ=Comanche Pickup(1986)

STYLES
SJ=Wagoneer(1981-83), Grand Wagoneer(1984-86), Cherokee(1981-83), J-10, J-20(1981-86)
XJ=Wagoneer(1984-86), Cherokee(1984-86)

AR = Use as Required - = Non Illustrated Part P.A.R. = Paint as Required

DECALS, EXTERIOR 2 TONE, PREMIUM COMANCHE
Figure 23-6600

81J68 6600

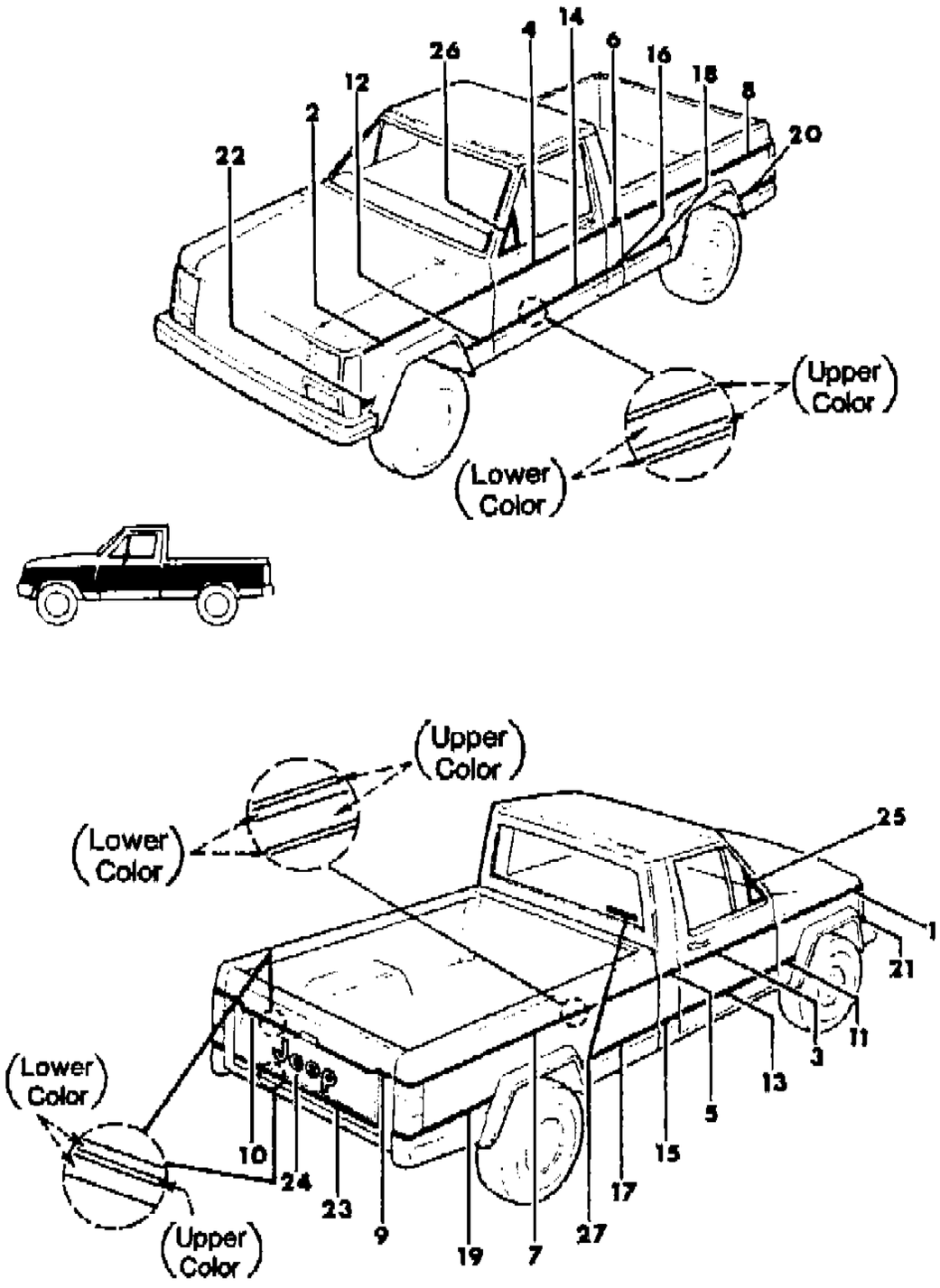

ITEM	PART NUMBER	QTY	BODY	MODEL	DESCRIPTION
	5501 3376-7	1			Charcoal/Sterling/Charcoal/Sterling
17-18					DECAL, Cargo Box Side
	5501 3880-1	1			Dark Honey/Beige/Dark Honey/Beige
	5501 4124-5	1			Dark Blue/Beige/Dark Blue/Beige
	5501 3386-7	1			Garnet/Black/Garnet/Black
	5501 3384-5	1			Charcoal/Sterling/Charcoal/Sterling
19-20					DECAL, Cargo Box Side
	5501 3388-9	1			Dark Honey/Beige/Dark Honey/Beige
	5501 4126-7	1			Dark Blue/Beige/Dark Blue/Beige
	5501 3394-5	1			Garnet/Black/Garnet/Black
	5501 3392-3	1			Charcoal/Sterling/Charcoal/Sterling
21-22					DECAL, Fender
	5501 2622-3	1			Dark Honey/Beige/Dark Honey/Beige
	5501 4202-3	1			Dark Blue/Beige/Dark Blue/Beige
	5501 2628-9	1			Garnet/Black/Garnet/Black
	5501 2626-7	1			Charcoal/Sterling/Charcoal/Sterling
23					DECAL, Tailgate
	5501 3396	1			Dark Honey/Beige/Dark Honey/Beige
	5501 4128	1			Dark Blue/Beige/Dark Blue/Beige
	5501 3399	1			Garnet/Black/Garnet/Black
	5501 3398	1			Charcoal/Sterling/Charcoal/Sterling
24					DECAL, Jeep
	5501 3100	1			Beige
	5500 6262	1			Black
	5501 3102	1			Sterling
25-26	5500 6220-1	1			DECAL, Door, Black
27	5501 5368	1			DECAL, Four Wheeler of The Year

MODEL CODES

16=Cherokee 2 Dr.(1981-83)	78=Cherokee 4WD-4 Dr.(1984-86)	64=Comanche 2WD-6 Ft. Box(1986)	25=J-10 Truck 7 Ft. Box(1981-84)
17=Cherokee 2 Dr.(1981-83)	85=CJ-5 (1981-83)	66=Comanche 2WD-7 Ft. Box(1986)	26=J10 Truck 8 Ft. Box(1981-86)
73=Cherokee 2WD-2 Dr.(1984-86)	86=CJ-6(1981)	63=Comanche 4WD-6 Ft. Box(1986)	27=J-20 Truck 8 Ft. Box(1981-86)
74=Cherokee 2WD-4 Dr.(1984-86)	87=CJ-7(1981-86)	65=Comanche 4WD-7 Ft. Box(1986)	15=Wagoneer 4 Dr.(1981-83)
18=Cherokee 4 Dr.(1981-83)	88=CJ-8, Scrambler(1981-86)	15=Grand Wagoneer 4 Dr.(1984-86)	75=Wagoneer 4WD-4 Dr.(1984-86)
77=Cherokee 4WD-2 Dr.(1984-86)			

BODY
CJ=CJ-5, CJ-6, CJ-7, CJ-8, Scrambler(1981-86)
MJ=Comanche Pickup(1986)

STYLES
SJ=Wagoneer(1981-83), Grand Wagoneer(1984-86), Cherokee(1981-83), J-10, J-20(1981-86)
XJ=Wagoneer(1984-86), Cherokee(1984-86)

AR = Use as Required - = Non Illustrated Part P.A.R. = Paint as Required

DECALS, EXTERIOR 2 TONE COMMEMORATIVE COMANCHE
Figure 23-6700

81J68 6700

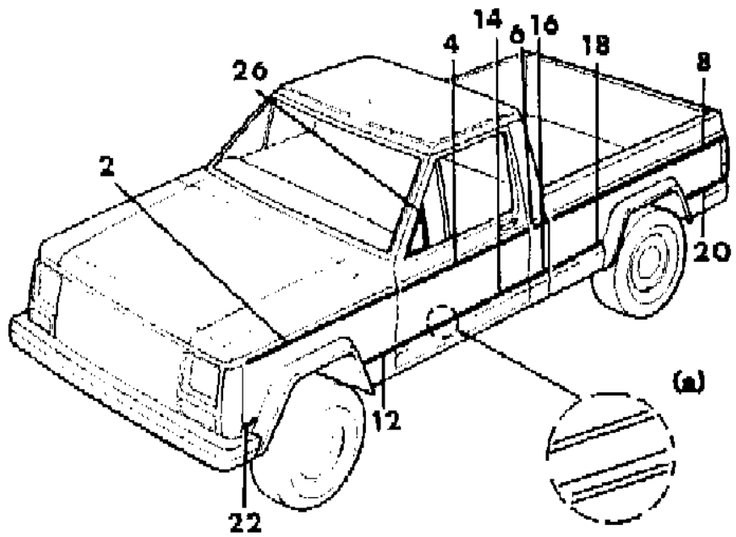

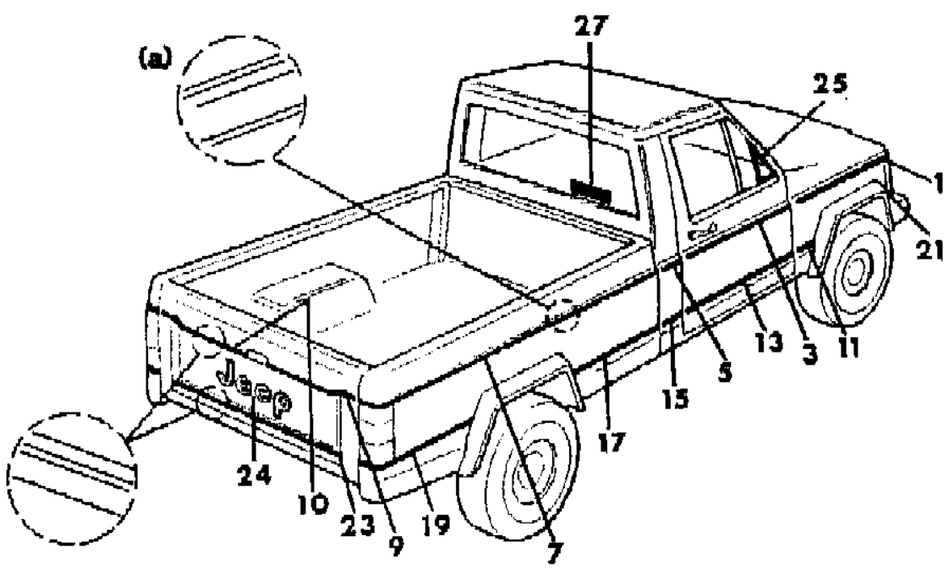

ITEM	PART NUMBER	QTY	BODY	MODEL	DESCRIPTION
1-2					DECAL, Fender, Modification Required (a)
	5501 4862-3	1			Black/Silver/Garnet/Silver
	5501 5224-5	1			Silver/Garnet/Silver/Black
3-4					DECAL, Door, Modification Required (a)
	5501 4862-3	1			Black/Silver/Garnet/Silver
	5501 5224-5	1			Silver/Garnet/Silver/Black
5-6					DECAL, Cab, Rear Quarter, (a)
	5501 4864-5	1			Black/Silver/Garnet/Silver
	5501 5226-7	1			Silver/Garnet/Silver/Black
7-8					DECAL, Cargo Box Side, (a)
	5501 4862-3	1			Black/Silver/Garnet/Silver
	5501 5224-5	1			Silver/Garnet/Silver/Black
9-10					DECAL, Tailgate, (a)
	5501 4866-7	1			Black/Silver/Garnet/Silver
	5501 5228-9	1			Silver/Garnet/Silver/Black
11-12					DECAL, Fender, Modiication Required (a)
	5501 4538-9	1			Silver/Garnet/Silver/Black
	5501 5238-9	1			Black/Silver/Garnet/Silver
13-14					DECAL, Door, (a)
	5501 4538-9	1			Silver/Garnet/Silver/Black
	5501 5238-9	1			Black/Silver/Garnet/Silver
15-16					DECAL, Cab, Rear Quarter, Modification Required (a)
	5501 4538-9	1			Silver/Garnet/Silver/Black
	5501 5238-9	1			Black/Silver/Garnet/Silver
17-18					DECAL, Cargo Box, (a)
	5501 4538-9	1			Silver/Garnet/Silver/Black
	5501 5238-9	1			Black/Silver/Garnet/Silver
19-20					DECAL, Cargo Box Side, (a)
	5501 4872-3	1			Silver/Garnet/Silver/Black
	5501 5234-5	1			Black/Silver/Garnet/Silver
21-22					DECAL, Fender, Modification Required (a)
	5501 4538-9	1			Silver/Garnet/Silver/Black
	5501 5238-9	1			Black/Silver/Garnet/Silver
23					DECAL, Tailgate, (a)
	5501 4874	1			Silver/Garnet/Silver/Black
	5501 5236	1			Black/Silver/Garnet/Silver
24					DECAL, Jeep
	5500 6262	1			Black
	5501 3102	1			Silver

MODEL CODES

16=Cherokee 2 Dr.(1981-83)	78=Cherokee 4WD-4 Dr.(1984-86)	64=Comanche 2WD-6 Ft. Box(1986)	25=J-10 Truck 7 Ft. Box(1981-84)
17=Cherokee 2 Dr.(1981-83)	85=CJ-5 (1981-83)	66=Comanche 2WD-7 Ft. Box(1986)	26=J10 Truck 8 Ft. Box(1981-86)
73=Cherokee 2WD-2 Dr.(1984-86)	86=CJ-6(1981)	63=Comanche 4WD-6 Ft. Box(1986)	27=J-20 Truck 8 Ft. Box(1981-86)
74=Cherokee 2WD-4 Dr.(1984-86)	87=CJ-7(1981-86)	65=Comanche 4WD-7 Ft. Box(1986)	15=Wagoneer 4 Dr.(1981-83)
18=Cherokee 4 Dr.(1981-83)	88=CJ-8, Scrambler(1981-86)	15=Grand Wagoneer 4 Dr.(1984-86)	75=Wagoneer 4WD-4 Dr.(1984-86)
77=Cherokee 4WD-2 Dr.(1984-86)			

BODY
CJ=CJ-5, CJ-6, CJ-7, CJ-8, Scrambler(1981-86)
MJ=Comanche Pickup(1986)

STYLES
SJ=Wagoneer(1981-83), Grand Wagoneer(1984-86), Cherokee(1981-83), J-10, J-20(1981-86)
XJ=Wagoneer(1984-86), Cherokee(1984-86)

AR = Use as Required - = Non Illustrated Part P.A.R. = Paint as Required

DECALS, EXTERIOR 2 TONE COMMEMORATIVE COMANCHE
Figure 23-6700

81J68 6700

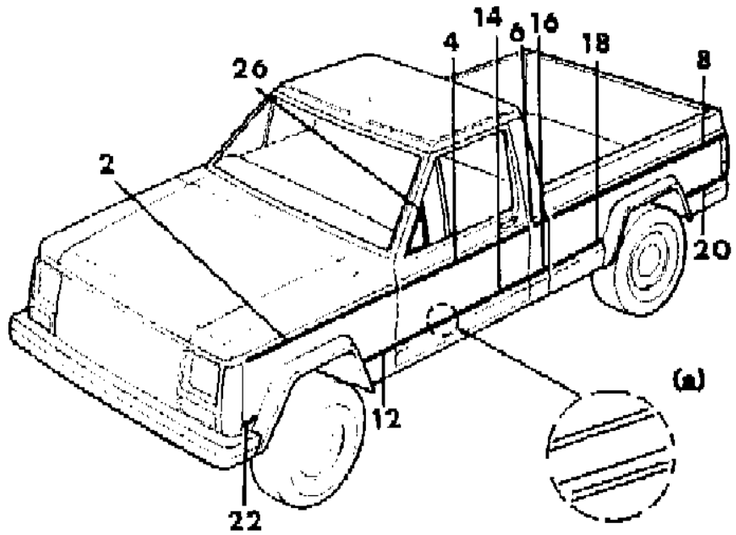

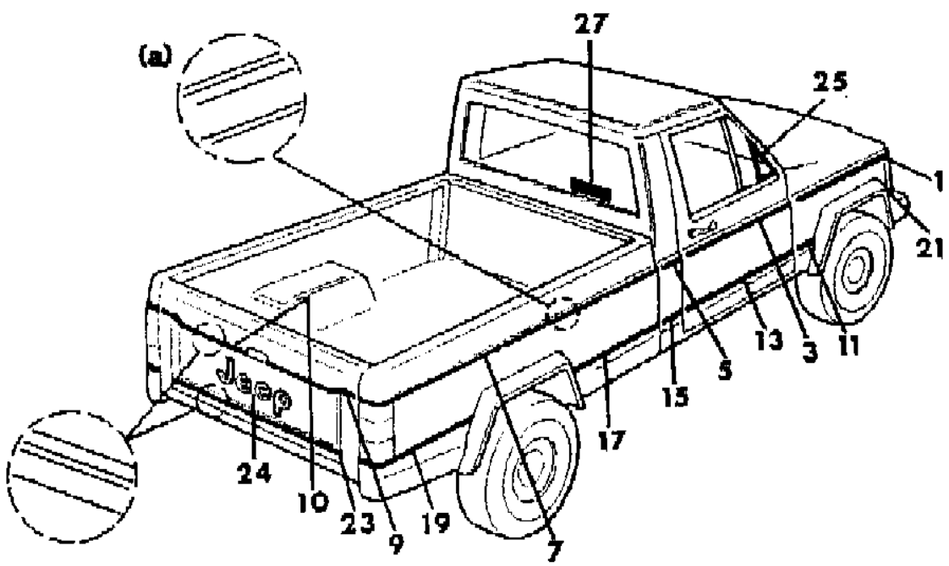

ITEM	PART NUMBER	QTY	BODY	MODEL	DESCRIPTION
25-26	5500 6220-1	1			DECAL, Door, Black
27	5501 5368	1			DECAL, Four Wheeler of The Year

(a) Match color sequence of the four stripes on the new decal to existing decal on vehicle. (c) These Decals are used on 1983 vehicles after approximately 5-1-83

MODEL CODES

16=Cherokee 2 Dr.(1981-83)	78=Cherokee 4WD-4 Dr.(1984-86)	64=Comanche 2WD-6 Ft. Box(1986)	25=J-10 Truck 7 Ft. Box(1981-84)
17=Cherokee 2 Dr.(1981-83)	85=CJ-5 (1981-83)	66=Comanche 2WD-7 Ft. Box(1986)	26=J10 Truck 8 Ft. Box(1981-86)
73=Cherokee 2WD-2 Dr.(1984-86)	86=CJ-6(1981)	63=Comanche 4WD-6 Ft. Box(1986)	27=J-20 Truck 8 Ft. Box(1981-86)
74=Cherokee 2WD-4 Dr.(1984-86)	87=CJ-7(1981-86)	65=Comanche 4WD-7 Ft. Box(1986)	15=Wagoneer 4 Dr.(1981-83)
18=Cherokee 4 Dr.(1981-83)	88=CJ-8, Scrambler(1981-86)	15=Grand Wagoneer 4 Dr.(1984-86)	75=Wagoneer 4WD-4 Dr.(1984-86)
77=Cherokee 4WD-2 Dr.(1984-86)			

BODY
CJ=CJ-5, CJ-6, CJ-7, CJ-8, Scrambler(1981-86)
MJ=Comanche Pickup(1986)

STYLES
SJ=Wagoneer(1981-83), Grand Wagoneer(1984-86), Cherokee(1981-83), J-10, J-20(1981-86)
XJ=Wagoneer(1984-86), Cherokee(1984-86)

AR = Use as Required - = Non Illustrated Part P.A.R. = Paint as Required

« RETURN TO GROUP INDEX

DECALS, EXTERIOR X COMANCHE
Figure 23-6800

81J68 6800

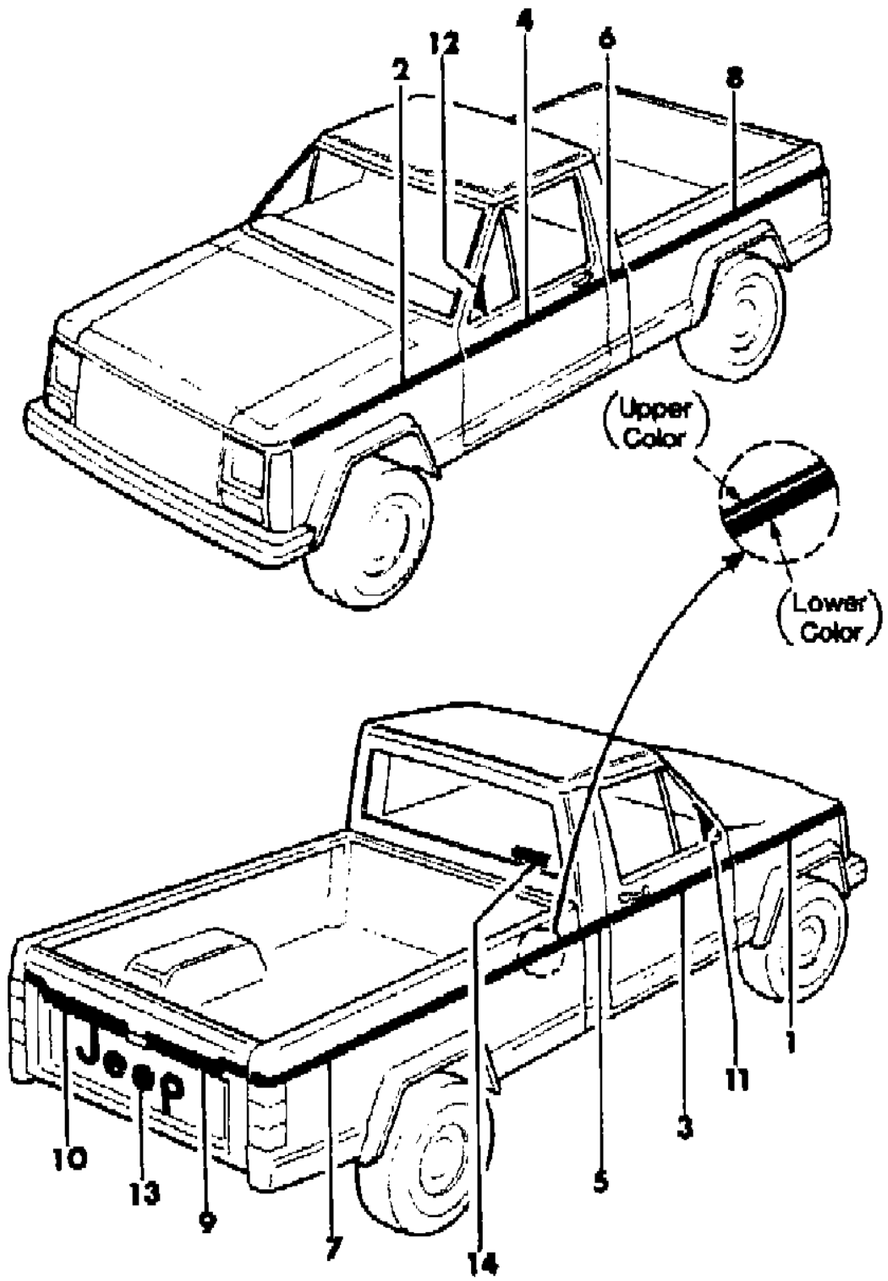

ITEM	PART NUMBER	QTY	BODY	MODEL	DESCRIPTION
1-2					DECAL, Fender
	8350 4854-5	1			Medium Blue/Light Blue
	5501 0094-5	1			Orange/Red
3-4					DECAL, Door
	8350 4856-7	1			Medium Blue/Light Blue
	5501 0096-7	1			Orange/Red
5-6					DECAL, Cab, Rear Quarter
	5501 0432-3	1			Medium Blue/Light Blue
	5501 0426-7	1			Orange/Red
7-8					DECAL, Cargo Box Side
	5501 0434-5	1			Medium Blue/Light Blue
	5501 0428-9	1			Orange/Red
9-10					DECAL, Tailgate
	5501 3640-1	1			Medium Blue/Light Blue
	5501 3642-3	1			Orange/Red
11-12	5500 6220-1	1			DECAL, Door, Black
13					DECAL, Jeep
	5501 0437	1			Medium Blue
	5501 0431	1			Red
14	5501 5368	1			DECAL, Four Wheeler of The Year

MODEL CODES

16=Cherokee 2 Dr.(1981-83)
17=Cherokee 2 Dr.(1981-83)
73=Cherokee 2WD-2 Dr.(1984-86)
74=Cherokee 2WD-4 Dr.(1984-86)
18=Cherokee 4 Dr.(1981-83)
77=Cherokee 4WD-2 Dr.(1984-86)
78=Cherokee 4WD-4 Dr.(1984-86)
85=CJ-5 (1981-83)
86=CJ-6(1981)
87=CJ-7(1981-86)
88=CJ-8, Scrambler(1981-86)
64=Comanche 2WD-6 Ft. Box(1986)
66=Comanche 2WD-7 Ft. Box(1986)
63=Comanche 4WD-6 Ft. Box(1986)
65=Comanche 4WD-7 Ft. Box(1986)
15=Grand Wagoneer 4 Dr.(1984-86)
25=J-10 Truck 7 Ft. Box(1981-84)
26=J10 Truck 8 Ft. Box(1981-86)
27=J-20 Truck 8 Ft. Box(1981-86)
15=Wagoneer 4 Dr.(1981-83)
75=Wagoneer 4WD-4 Dr.(1984-86)

BODY
CJ=CJ-5, CJ-6, CJ-7, CJ-8, Scrambler(1981-86)
MJ=Comanche Pickup(1986)

STYLES
SJ=Wagoneer(1981-83), Grand Wagoneer(1984-86), Cherokee(1981-83), J-10, J-20(1981-86)
XJ=Wagoneer(1984-86), Cherokee(1984-86)

AR = Use as Required - = Non Illustrated Part P.A.R. = Paint as Required

« RETURN TO GROUP INDEX

DECALS, EXTERIOR XLS COMANCHE
Figure 23-6900

81J68 6900

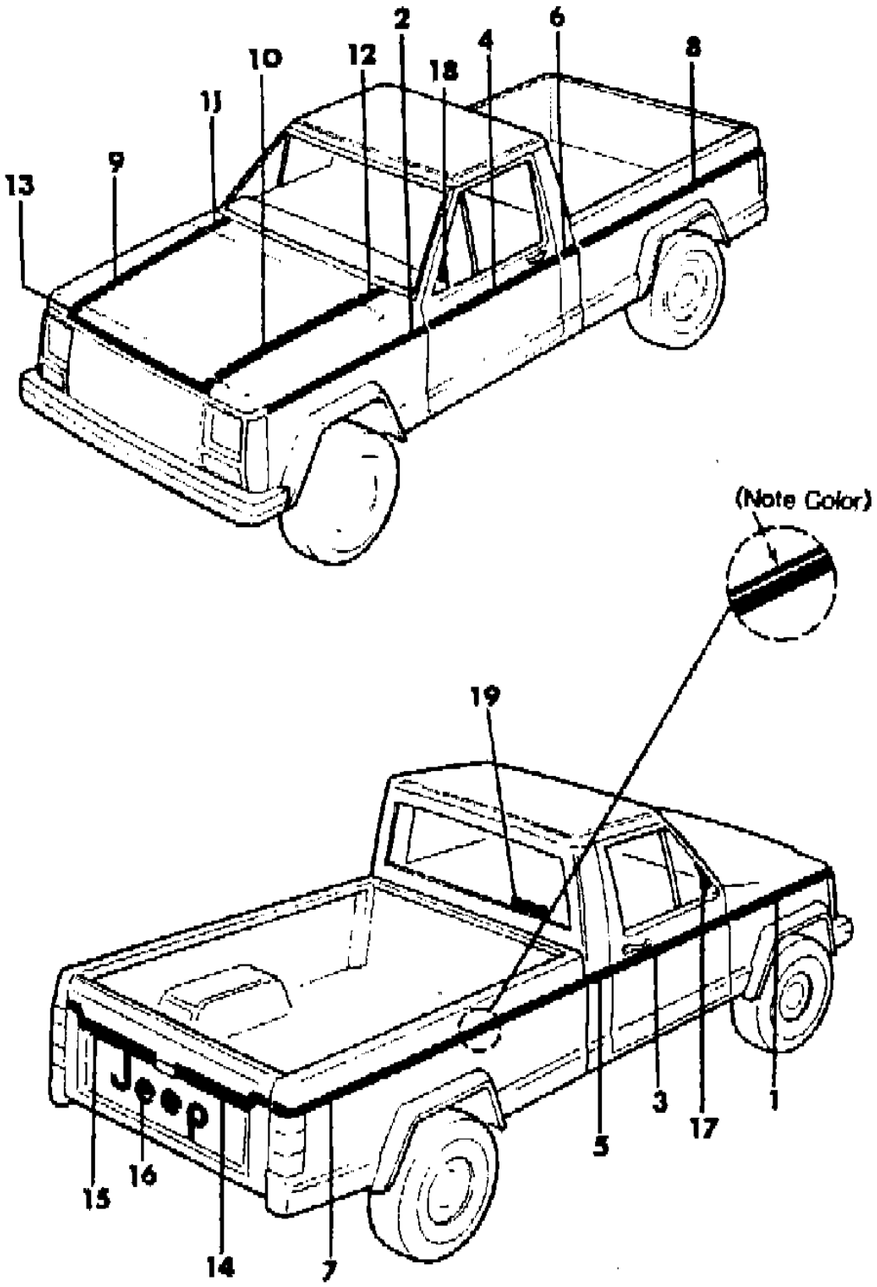

ITEM	PART NUMBER	QTY	BODY	MODEL	DESCRIPTION
1-2					DECAL, Fender
	5500 5990-1	1			Dark Blue
	5500 5952-3	1			Gold
	5500 5972-3	1			Dark Red
3-4					DECAL, Door
	5500 5992-3	1			Dark Blue
	5500 5954-5	1			Gold
	5500 5974-5	1			Dark Red
5-6					DECAL, Cab, Rear Quarter
	5501 0444-5	1			Dark Blue
	5501 0442-3	1			Gold
	5501 0440-1	1			Dark Red
7-8					DECAL, Cargo Box Side
	5501 0450-1	1			Dark Blue
	5501 0448-9	1			Gold
	5501 0446-7	1			Dark Red
9-10					DECAL, Hood
	5500 5986-7	1			Dark Blue
	5500 5948-9	1			Gold
	5500 5968-9	1			Dark Red
11-12					DECAL, Cowl
	5500 5988-9	1			Dark Blue
	5500 5950-1	1			Gold
	5500 5970-1	1			Dark Red
13					DECAL, Grille Panel
	5500 5984	1			Dark Blue
	5500 5946	1			Gold
	5500 5966	1			Dark Red
14-15					DECAL, Tailgate
	5501 3634-5	1			Dark Blue
	5501 3636-7	1			Gold
	5501 3638-9	1			Dark Red
16					DECAL, Jeep
	5501 0457	1			Dark Blue
	5501 0456	1			Gold
	5501 0455	1			Dark Red
17-18	5500 6220-1	1			DECAL, Door, Black
19	5501 5368	1			DECAL, Four Wheeler of The Year

MODEL CODES
16=Cherokee 2 Dr.(1981-83)
17=Cherokee 2 Dr.(1981-83)
73=Cherokee 2WD-2 Dr.(1984-86)
74=Cherokee 2WD-4 Dr.(1984-86)
18=Cherokee 4 Dr.(1981-83)
77=Cherokee 4WD-2 Dr.(1984-86)
78=Cherokee 4WD-4 Dr.(1984-86)
85=CJ-5 (1981-83)
86=CJ-6(1981)
87=CJ-7(1981-86)
88=CJ-8, Scrambler(1981-86)
64=Comanche 2WD-6 Ft. Box(1986)
66=Comanche 2WD-7 Ft. Box(1986)
63=Comanche 4WD-6 Ft. Box(1986)
65=Comanche 4WD-7 Ft. Box(1986)
15=Grand Wagoneer 4 Dr.(1984-86)
25=J-10 Truck 7 Ft. Box(1981-84)
26=J10 Truck 8 Ft. Box(1981-86)
27=J-20 Truck 8 Ft. Box(1981-86)
15=Wagoneer 4 Dr.(1981-83)
75=Wagoneer 4WD-4 Dr.(1984-86)

BODY
CJ=CJ-5, CJ-6, CJ-7, CJ-8, Scrambler(1981-86)
MJ=Comanche Pickup(1986)

STYLES
SJ=Wagoneer(1981-83), Grand Wagoneer(1984-86), Cherokee(1981-83), J-10, J-20(1981-86)
XJ=Wagoneer(1984-86), Cherokee(1984-86)

AR = Use as Required - = Non Illustrated Part P.A.R. = Paint as Required

« RETURN TO GROUP INDEX

DECALS, EXTERIOR SPORT COMANCHE
Figure 23-7000

81J68 7000

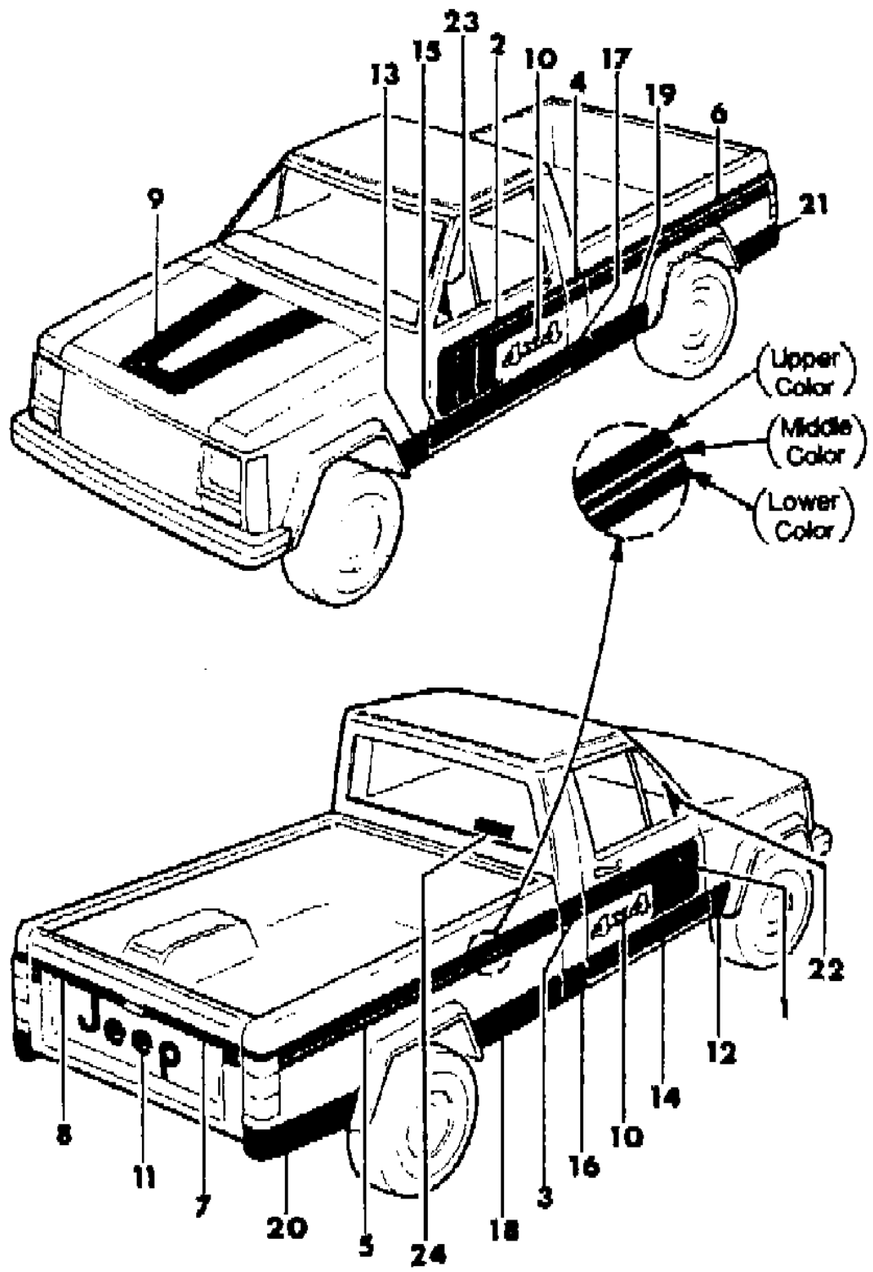

ITEM	PART NUMBER	QTY	BODY	MODEL	DESCRIPTION
1-2					DECAL, Door
	5501 0470-1	1			Dark Bronze/Medium Bronze/Light Bronze
	5501 0472-3	1			Dark Orange/Medium Orange/Light Orange
	5501 0468-9	1			Dark Silver/Medium Silver/Light Silver
3-4					DECAL, Cab Rear Quarter
	5501 0476-7	1			Dark Bronze/Medium Bronze/Light Bronze
	5501 0478-9	1			Dark Orange/Medium Orange/Light Orange
	5501 0474-5	1			Dark Silver/Medium Silver/Light Silver
5-6					DECAL, Cargo Box Side
	5501 0486-7	1			Dark Bronze/Medium Bronze/Light Bronze
	5501 0488-9	1			Dark Orange/Medium Orange/Light Orange
	5501 0484-5	1			Dark Silver/Medium Silver/Light Silver
7-8					DECAL, Tailgate
	5501 3534-5	1			Dark Bronze/Medium Bronze/Light Bronze
	5501 3532-3	1			Dark Orange/Medium Orange/Light Orange
	5501 3536-7	1			Dark Silver/Medium Silver/Light Silver
9					DECAL, Hood
	5501 0466	1			Dark Bronze/Medium Bronze/Light Bronze
	5501 0467	1			Dark Oronge/Medium Orange/Light Orange
	5501 0465	1			Dark Silver/Medium Silver/Light Silver
10					DECAL, 4X4
	5501 0491	2			Light Bronze
	5501 0492	2			Light Orange
	5501 0490	2			Light Silver
11					DECAL, Jeep
	5501 0497	1			Dark Bronze
	5501 0498	1			Dark Orange
	5501 0496	1			Dark Silver
12-13	5501 0836-7	1			DECAL, Fender, Black
14-15	5501 0500-1	1			DECAL, Door, Black
16-17	5501 0502-3	1			DECAL, Cab, Rear Quarter, Black
18-19	5501 0504-5	1			DECAL, Cargo Box Side, Black
20-21	5501 0506-7	1			DECAL, Cargo Box Side, Black
22-23	5500 6220-1	1			DECAL, Door, Black
24	5501 5368	1			DECAL, Four Wheeler of The Year

MODEL CODES

16=Cherokee 2 Dr.(1981-83)
17=Cherokee 2 Dr.(1981-83)
73=Cherokee 2WD-2 Dr.(1984-86)
74=Cherokee 2WD-4 Dr.(1984-86)
18=Cherokee 4 Dr.(1981-83)
77=Cherokee 4WD-2 Dr.(1984-86)
78=Cherokee 4WD-4 Dr.(1984-86)
85=CJ-5 (1981-83)
86=CJ-6(1981)
87=CJ-7(1981-86)
88=CJ-8, Scrambler(1981-86)
64=Comanche 2WD-6 Ft. Box(1986)
66=Comanche 2WD-7 Ft. Box(1986)
63=Comanche 4WD-6 Ft. Box(1986)
65=Comanche 4WD-7 Ft. Box(1986)
15=Grand Wagoneer 4 Dr.(1984-86)
25=J-10 Truck 7 Ft. Box(1981-84)
26=J10 Truck 8 Ft. Box(1981-86)
27=J-20 Truck 8 Ft. Box(1981-86)
15=Wagoneer 4 Dr.(1981-83)
75=Wagoneer 4WD-4 Dr.(1984-86)

BODY
CJ=CJ-5, CJ-6, CJ-7, CJ-8, Scrambler(1981-86)
MJ=Comanche Pickup(1986)

STYLES
SJ=Wagoneer(1981-83), Grand Wagoneer(1984-86), Cherokee(1981-83), J-10, J-20(1981-86)
XJ=Wagoneer(1984-86), Cherokee(1984-86)

AR = Use as Required - = Non Illustrated Part P.A.R. = Paint as Required

« RETURN TO GROUP INDEX

DECALS, EXTERIOR PARTS AND SERVICE COMANCHE
Figure 23-7100

81J68 7100

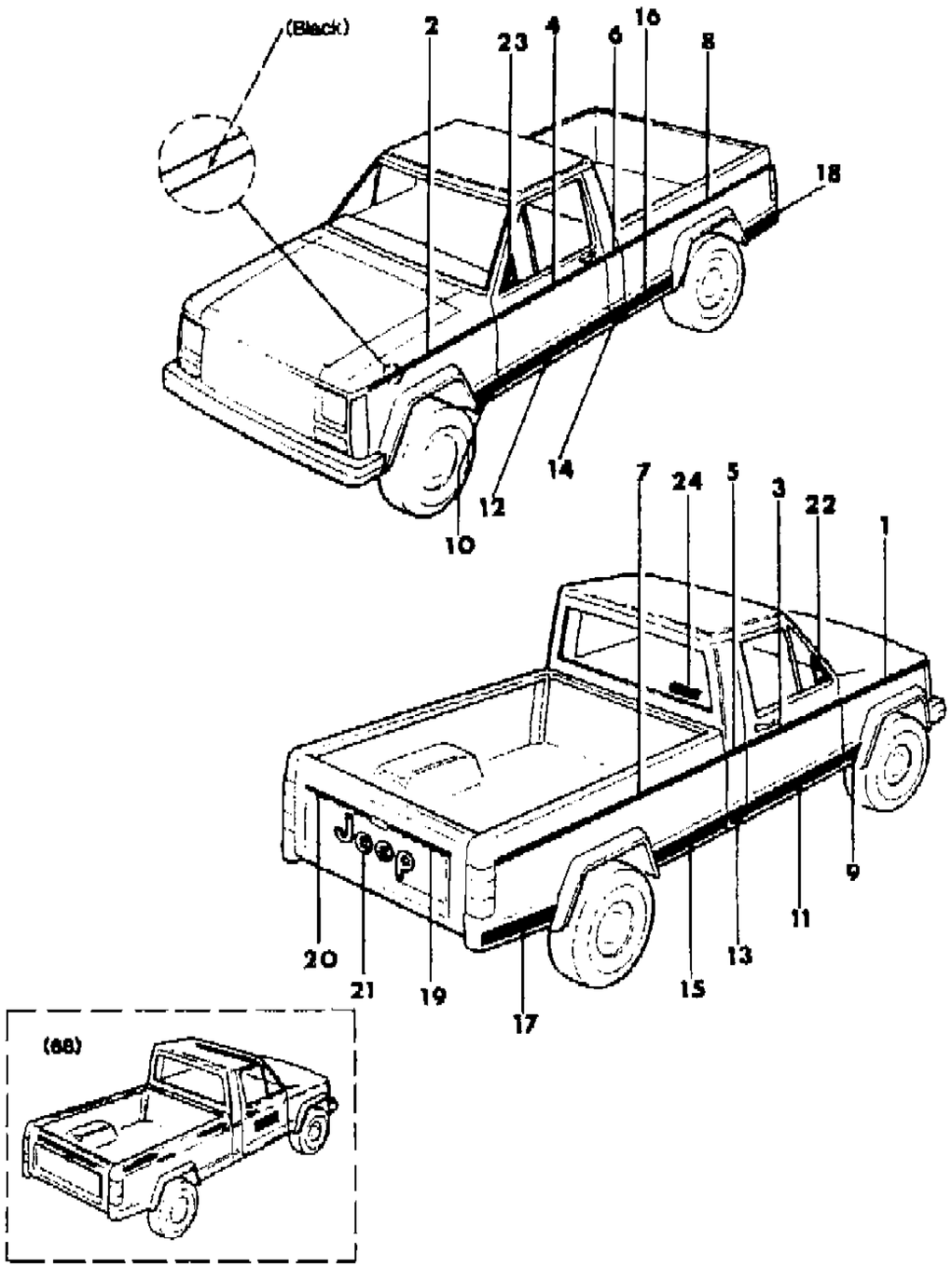

ITEM	PART NUMBER	QTY	BODY	MODEL	DESCRIPTION
1-2	5501 3196-7	1			DECAL, Fender
3-4	5501 3198-9	1			DECAL, Door
5-6	5501 3200-1	1			DECAL, Cab Rear Quarter
7-8	5501 3202-3	1			DECAL, Cargo Box Side
9-10	5501 0836-7	1			DECAL, Fender
11-12	5501 0500-1	1			DECAL, Door
13-14	5501 0502-3	1			DECAL, Cab, Rear Quarter
15-16	5501 0504-5	1			DECAL, Cargo Box Side
17-18	5501 0506-7	1			DECAL, Cargo Box Side
19-20	5501 3204-5	1			DECAL, Tailgate
21	5501 3206	1			DECAL, Jeep
22-23	5500 6220-1	1			DECAL, Door
24	5501 5368	1			DECAL, Four Wheeler of The Year

MODEL CODES
16=Cherokee 2 Dr.(1981-83)
17=Cherokee 2 Dr.(1981-83)
73=Cherokee 2WD-2 Dr.(1984-86)
74=Cherokee 2WD-4 Dr.(1984-86)
18=Cherokee 4 Dr.(1981-83)
77=Cherokee 4WD-2 Dr.(1984-86)
78=Cherokee 4WD-4 Dr.(1984-86)
85=CJ-5 (1981-83)
86=CJ-6(1981)
87=CJ-7(1981-86)
88=CJ-8, Scrambler(1981-86)
64=Comanche 2WD-6 Ft. Box(1986)
66=Comanche 2WD-7 Ft. Box(1986)
63=Comanche 4WD-6 Ft. Box(1986)
65=Comanche 4WD-7 Ft. Box(1986)
15=Grand Wagoneer 4 Dr.(1984-86)
25=J-10 Truck 7 Ft. Box(1981-84)
26=J10 Truck 8 Ft. Box(1981-86)
27=J-20 Truck 8 Ft. Box(1981-86)
15=Wagoneer 4 Dr.(1981-83)
75=Wagoneer 4WD-4 Dr.(1984-86)

BODY
CJ=CJ-5, CJ-6, CJ-7, CJ-8, Scrambler(1981-86)
MJ=Comanche Pickup(1986)

STYLES
SJ=Wagoneer(1981-83), Grand Wagoneer(1984-86), Cherokee(1981-83), J-10, J-20(1981-86)
XJ=Wagoneer(1984-86), Cherokee(1984-86)

AR = Use as Required - = Non Illustrated Part P.A.R. = Paint as Required

« RETURN TO GROUP INDEX

NAMEPLATES SJ CHEROKEE 4 DOOR
Figure 23-7200

81J68 7200

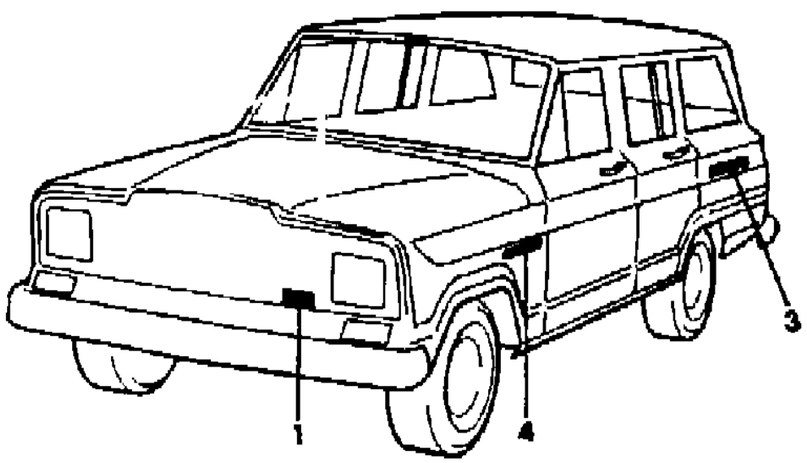

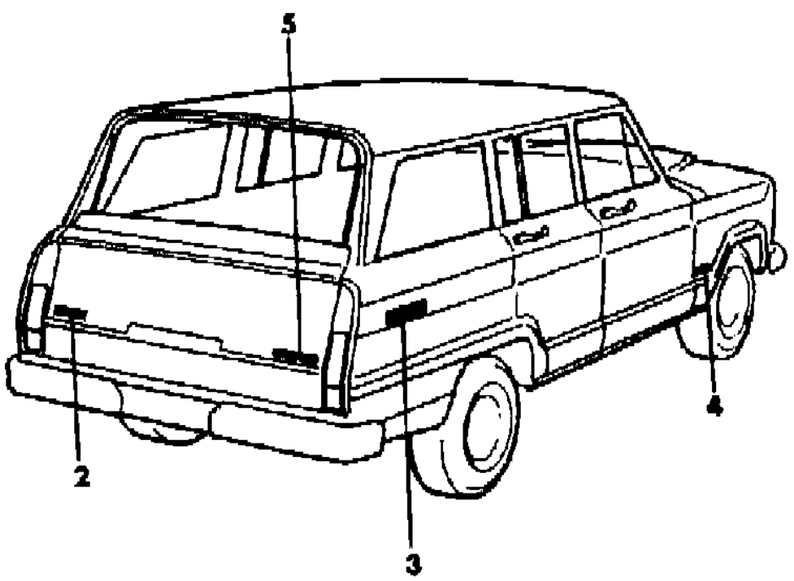

ITEM	PART NUMBER	QTY	BODY	MODEL	DESCRIPTION
1					NAMEPLATE
	J545 1627	1			Jeep
2					NAMEPLATE
	J545 1627	1			Jeep
	5501 3578	1			V-8
3					NAMEPLATE
	5500 7817	2			4x4
	J545 1635	2			4-Wheel Drive
	J576 3574	AR			Selec-Trac
4					NAMEPLATE
	J545 1635	2			4-Wheel Drive
	J546 0834	2			Indian Head
	J545 2506	2			Cherokee
	J575 0834	2			Laredo
5					NAMEPLATE
	J545 1627	1			Jeep
	J545 1635	2			4-Wheel Drive
	J576 3574	AR			Selec -Trac
	J545 1628	1			Quadra-Trac

MODEL CODES

16=Cherokee 2 Dr.(1981-83)
17=Cherokee 2 Dr.(1981-83)
73=Cherokee 2WD-2 Dr.(1984-86)
74=Cherokee 2WD-4 Dr.(1984-86)
18=Cherokee 4 Dr.(1981-83)
77=Cherokee 4WD-2 Dr.(1984-86)
78=Cherokee 4WD-4 Dr.(1984-86)
85=CJ-5 (1981-83)
86=CJ-6(1981)
87=CJ-7(1981-86)
88=CJ-8, Scrambler(1981-86)
64=Comanche 2WD-6 Ft. Box(1986)
66=Comanche 2WD-7 Ft. Box(1986)
63=Comanche 4WD-6 Ft. Box(1986)
65=Comanche 4WD-7 Ft. Box(1986)
15=Grand Wagoneer 4 Dr.(1984-86)
25=J-10 Truck 7 Ft. Box(1981-84)
26=J10 Truck 8 Ft. Box(1981-86)
27=J-20 Truck 8 Ft. Box(1981-86)
15=Wagoneer 4 Dr.(1981-83)
75=Wagoneer 4WD-4 Dr.(1984-86)

BODY

CJ=CJ-5, CJ-6, CJ-7, CJ-8, Scrambler(1981-86)
MJ=Comanche Pickup(1986)

STYLES

SJ=Wagoneer(1981-83), Grand Wagoneer(1984-86), Cherokee(1981-83), J-10, J-20(1981-86)
XJ=Wagoneer(1984-86), Cherokee(1984-86)

AR = Use as Required - = Non Illustrated Part P.A.R. = Paint as Required

« RETURN TO GROUP INDEX

MOULDINGS, EXTERIOR, UPPER SJ CHEROKEE 4 DOOR
Figure 23-7300

81J68 7300

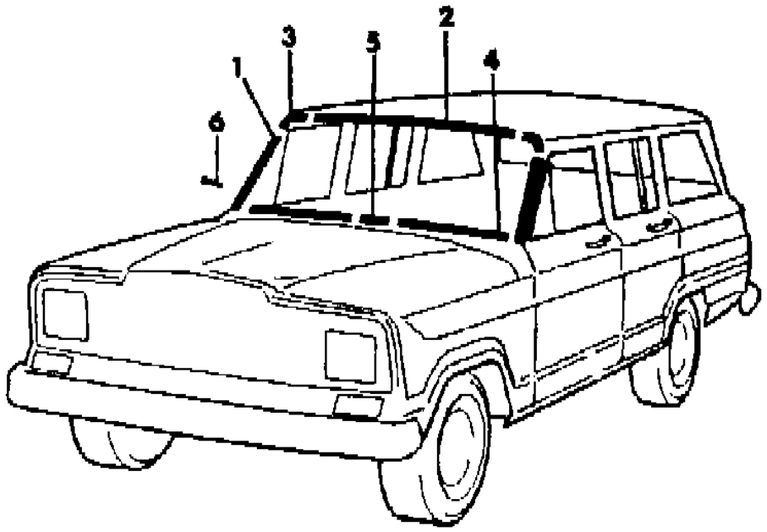

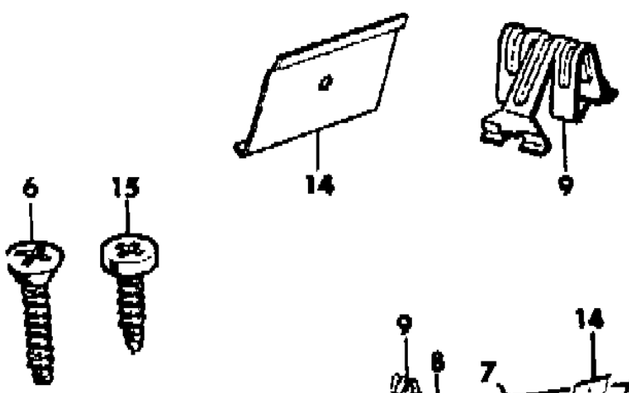

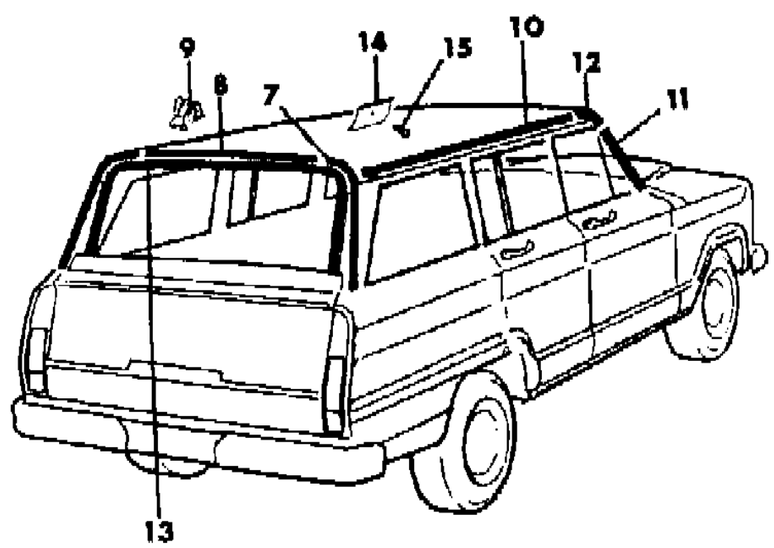

ITEM	PART NUMBER	QTY	BODY	MODEL	DESCRIPTION
1					MOULDING, Windshield
	J096 8348	1			Right
	J096 8347	1			Left
2	J096 0057	1			MOULDING, Windshield
3					CAP, Moulding
	J096 8350	1			Right
	J096 8349	1			Left
4					MOULDING, Windshield
	J096 1178	1			Right
	J096 1177	1			Left
5	J096 1240	1			CAP, Moulding
6	J400 6409	AR			SCREW
7					MOULDING, Rear Quarter
	J096 5620	1			Right
	J096 5619	1			Left
8	J096 5623	1			MOULDING, Roof
9	J400 4902	AR			CLIP
10		2			MOULDING, Clip
	J545 6898	2			Metal
	J576 0634	2			Plastic
11					MOULDING, Drip
	J097 1634	2			Metal
	J576 0635	2			Plastic
12					CAP, Moulding
	J097 1637	2			Metal
	J575 0560	2			Plastic
13	J575 4191	1			MOULDING, Rear Window
14	J096 0882	AR			TRACK, Moulding
15	J096 2022	10			SCREW

MODEL CODES
16=Cherokee 2 Dr.(1981-83)
17=Cherokee 2 Dr.(1981-83)
73=Cherokee 2WD-2 Dr.(1984-86)
74=Cherokee 2WD-4 Dr.(1984-86)
18=Cherokee 4 Dr.(1981-83)
77=Cherokee 4WD-2 Dr.(1984-86)
78=Cherokee 4WD-4 Dr.(1984-86)
85=CJ-5 (1981-83)
86=CJ-6(1981)
87=CJ-7(1981-86)
88=CJ-8, Scrambler(1981-86)
64=Comanche 2WD-6 Ft. Box(1986)
66=Comanche 2WD-7 Ft. Box(1986)
63=Comanche 4WD-6 Ft. Box(1986)
65=Comanche 4WD-7 Ft. Box(1986)
15=Grand Wagoneer 4 Dr.(1984-86)
25=J-10 Truck 7 Ft. Box(1981-84)
26=J10 Truck 8 Ft. Box(1981-86)
27=J-20 Truck 8 Ft. Box(1981-86)
15=Wagoneer 4 Dr.(1981-83)
75=Wagoneer 4WD-4 Dr.(1984-86)

BODY
CJ=CJ-5, CJ-6, CJ-7, CJ-8, Scrambler(1981-86)
MJ=Comanche Pickup(1986)

STYLES
SJ=Wagoneer(1981-83), Grand Wagoneer(1984-86), Cherokee(1981-83), J-10, J-20(1981-86)
XJ=Wagoneer(1984-86), Cherokee(1984-86)

AR = Use as Required - = Non Illustrated Part P.A.R. = Paint as Required

« RETURN TO GROUP INDEX

MOULDINGS, EXTERIOR, LOWER SJ CHEROKEE 4 DOOR, MODEL 18
Figure 23-7400

81J68 7400

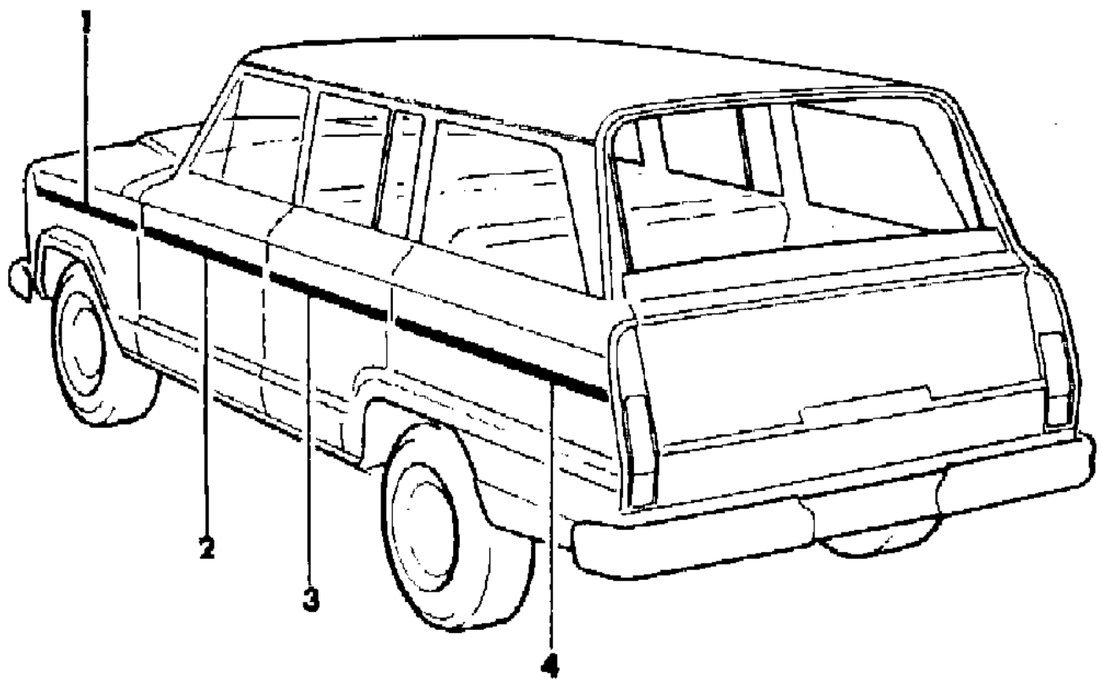

ITEM	PART NUMBER	QTY	BODY	MODEL	DESCRIPTION
1					MOULDING, Fender
	J575 7684-5	1			Black
	J575 7692-3	1			White
2					MOULDING, Door, Front
	J575 7684	2			Black, Modification Required
	J575 7692	2			White, Modification Required
3					MOULDING,Door
	J575 7685	2			Black, Modification Required
	J575 7693	2			White, Modification Required
4					MOULDING, Rear Quarter
	J575 7690-1	1			Black, Modification Required
	J575 7698-9	1			White, Modification Required

MODEL CODES

16=Cherokee 2 Dr.(1981-83)
17=Cherokee 2 Dr.(1981-83)
73=Cherokee 2WD-2 Dr.(1984-86)
74=Cherokee 2WD-4 Dr.(1984-86)
18=Cherokee 4 Dr.(1981-83)
77=Cherokee 4WD-2 Dr.(1984-86)
78=Cherokee 4WD-4 Dr.(1984-86)
85=CJ-5 (1981-83)
86=CJ-6(1981)
87=CJ-7(1981-86)
88=CJ-8, Scrambler(1981-86)
64=Comanche 2WD-6 Ft. Box(1986)
66=Comanche 2WD-7 Ft. Box(1986)
63=Comanche 4WD-6 Ft. Box(1986)
65=Comanche 4WD-7 Ft. Box(1986)
15=Grand Wagoneer 4 Dr.(1984-86)
25=J-10 Truck 7 Ft. Box(1981-84)
26=J10 Truck 8 Ft. Box(1981-86)
27=J-20 Truck 8 Ft. Box(1981-86)
15=Wagoneer 4 Dr.(1981-83)
75=Wagoneer 4WD-4 Dr.(1984-86)

BODY
CJ=CJ-5, CJ-6, CJ-7, CJ-8, Scrambler(1981-86)
MJ=Comanche Pickup(1986)

STYLES
SJ=Wagoneer(1981-83), Grand Wagoneer(1984-86), Cherokee(1981-83), J-10, J-20(1981-86)
XJ=Wagoneer(1984-86), Cherokee(1984-86)

AR = Use as Required - = Non Illustrated Part P.A.R. = Paint as Required

« RETURN TO GROUP INDEX

DECALS, EXTERIOR PIONEER, 1983 SJ CHEROKEE 4 DOOR, MODEL 18
Figure 23-7500

81J68 7500

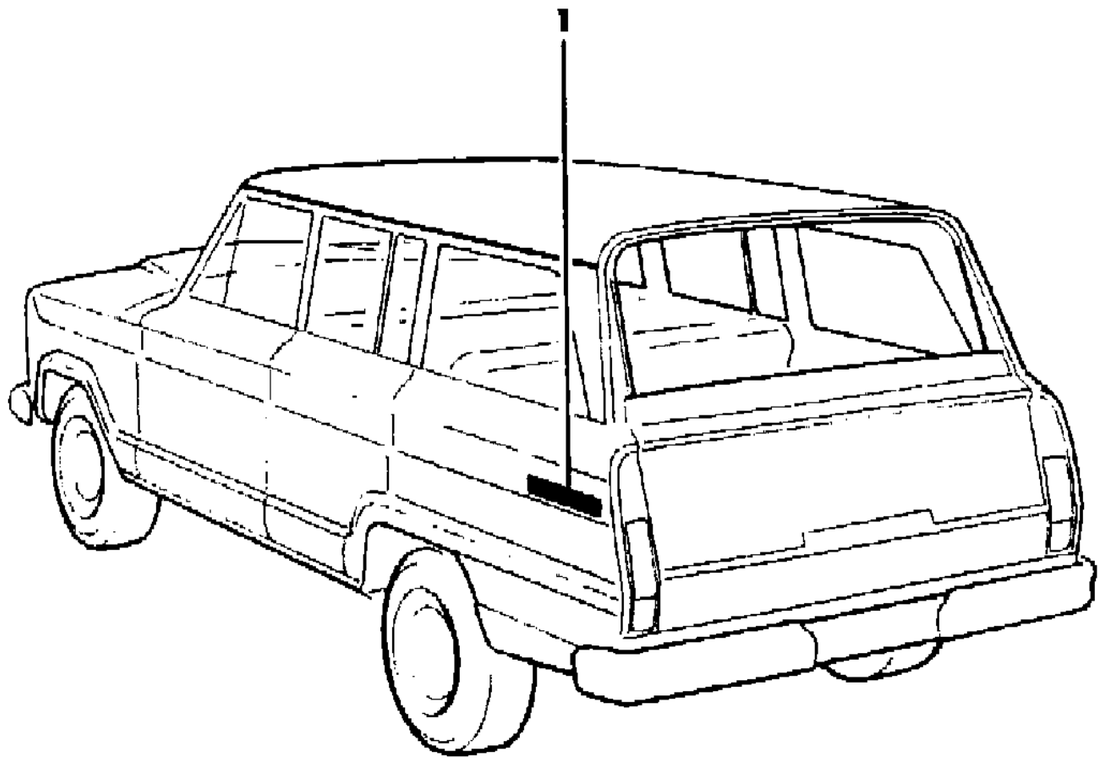

ITEM	PART NUMBER	QTY	BODY	MODEL	DESCRIPTION
1	J576 3505	2			DECAL, Rear Quarter

MODEL CODES

16=Cherokee 2 Dr.(1981-83)	78=Cherokee 4WD-4 Dr.(1984-86)	64=Comanche 2WD-6 Ft. Box(1986)	25=J-10 Truck 7 Ft. Box(1981-84)
17=Cherokee 2 Dr.(1981-83)	85=CJ-5 (1981-83)	66=Comanche 2WD-7 Ft. Box(1986)	26=J10 Truck 8 Ft. Box(1981-86)
73=Cherokee 2WD-2 Dr.(1984-86)	86=CJ-6(1981)	63=Comanche 4WD-6 Ft. Box(1986)	27=J-20 Truck 8 Ft. Box(1981-86)
74=Cherokee 2WD-4 Dr.(1984-86)	87=CJ-7(1981-86)	65=Comanche 4WD-7 Ft. Box(1986)	15=Wagoneer 4 Dr.(1981-83)
18=Cherokee 4 Dr.(1981-83)	88=CJ-8, Scrambler(1981-86)	15=Grand Wagoneer 4 Dr.(1984-86)	75=Wagoneer 4WD-4 Dr.(1984-86)
77=Cherokee 4WD-2 Dr.(1984-86)			

BODY
CJ=CJ-5, CJ-6, CJ-7, CJ-8, Scrambler(1981-86)
MJ=Comanche Pickup(1986)

STYLES
SJ=Wagoneer(1981-83), Grand Wagoneer(1984-86), Cherokee(1981-83), J-10, J-20(1981-86)
XJ=Wagoneer(1984-86), Cherokee(1984-86)

AR = Use as Required - = Non Illustrated Part P.A.R. = Paint as Required

« RETURN TO GROUP INDEX

DECALS, EXTERIOR CHIEF, 1981-82 SJ CHEROKEE 4 DOOR
Figure 23-7600

81J68 7600

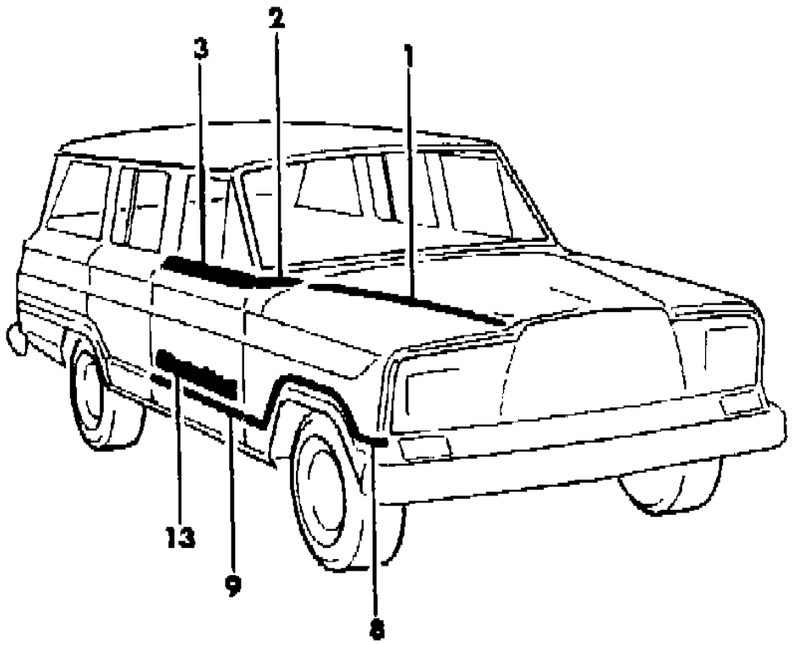

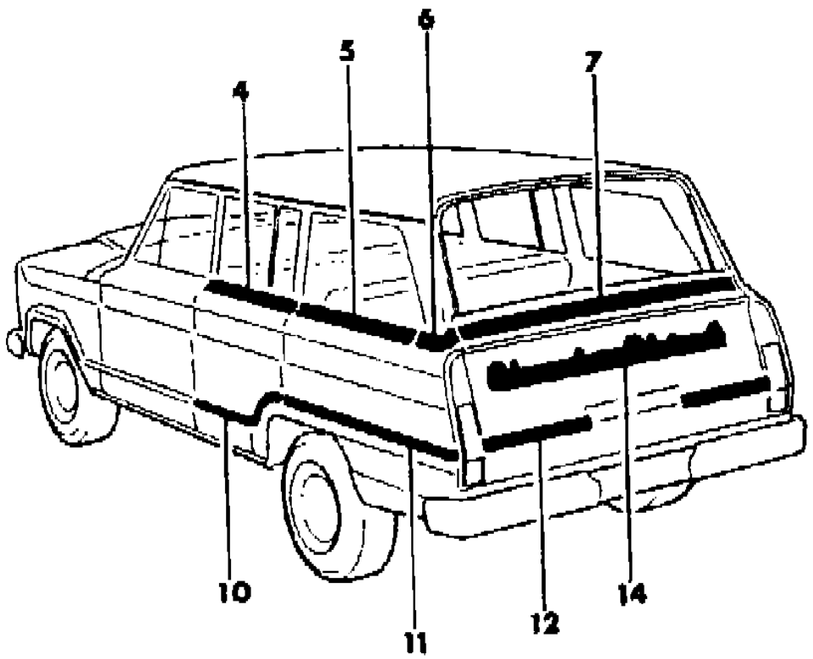

ITEM	PART NUMBER	QTY	BODY	MODEL	DESCRIPTION
1	J575 7944-5	1			DECAL, Hood
2	J575 7946-7	1			DECAL, Cowl
3	J575 7948-9	1			DECAL, Door Front
4	J575 7950-1	1			DECAL, Door
5	J575 7952-3	1			DECAL, Rear Quarter Upper
6	J575 7954-5	1			DECAL, Rear Quarter
7	J575 7956	1			DECAL, Tailgate
8	J575 7958-9	1			DECAL, Fender
9	J575 7960-1	1			DECAL, Door Front
10	J575 7962-3	1			DECAL, Door
11	J575 7964-5	1			DECAL, Rear Quarter
12	J575 7966-7	1			DECAL, Tailgate
13	J575 7968	2			DECAL, Door
14	J575 7957	1			DECAL, Tailgate Upper

MODEL CODES

16=Cherokee 2 Dr.(1981-83)
17=Cherokee 2 Dr.(1981-83)
73=Cherokee 2WD-2 Dr.(1984-86)
74=Cherokee 2WD-4 Dr.(1984-86)
18=Cherokee 4 Dr.(1981-83)
77=Cherokee 4WD-2 Dr.(1984-86)
78=Cherokee 4WD-4 Dr.(1984-86)
85=CJ-5 (1981-83)
86=CJ-6(1981)
87=CJ-7(1981-86)
88=CJ-8, Scrambler(1981-86)
64=Comanche 2WD-6 Ft. Box(1986)
66=Comanche 2WD-7 Ft. Box(1986)
63=Comanche 4WD-6 Ft. Box(1986)
65=Comanche 4WD-7 Ft. Box(1986)
15=Grand Wagoneer 4 Dr.(1984-86)
25=J-10 Truck 7 Ft. Box(1981-84)
26=J10 Truck 8 Ft. Box(1981-86)
27=J-20 Truck 8 Ft. Box(1981-86)
15=Wagoneer 4 Dr.(1981-83)
75=Wagoneer 4WD-4 Dr.(1984-86)

BODY
CJ=CJ-5, CJ-6, CJ-7, CJ-8, Scrambler(1981-86)
MJ=Comanche Pickup(1986)

STYLES
SJ=Wagoneer(1981-83), Grand Wagoneer(1984-86), Cherokee(1981-83), J-10, J-20(1981-86)
XJ=Wagoneer(1984-86), Cherokee(1984-86)

AR = Use as Required - = Non Illustrated Part P.A.R. = Paint as Required

« RETURN TO GROUP INDEX

DECALS, EXTERIOR LAREDO, 1981-82, TYPE 1 OR 2 SJ CHEROKEE 4 DOOR, MODEL 18
Figure 23-7700

81J68 7700

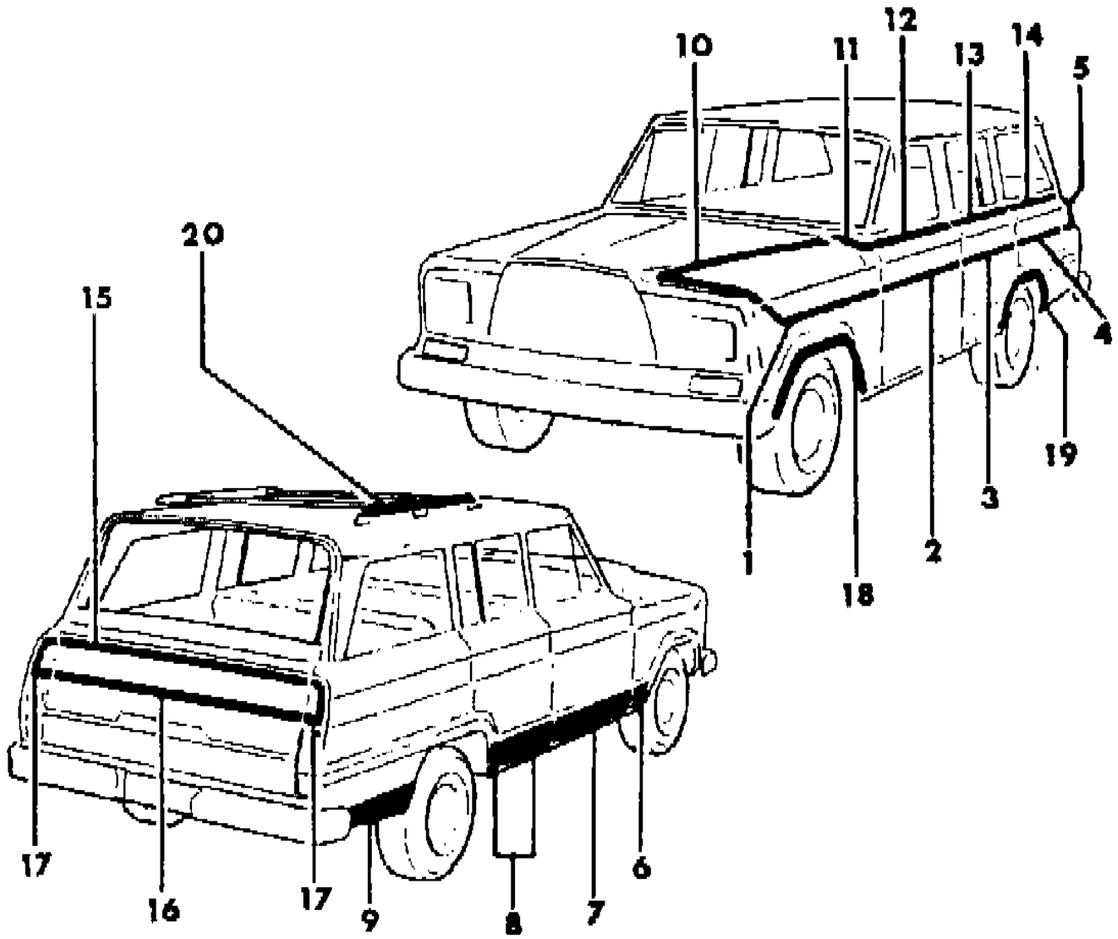

ITEM	PART NUMBER	QTY	BODY	MODEL	DESCRIPTION
1					DECAL, Fender
					Right
	J575 6072	1			Bronze/Nutmeg
	J576 1036	1			Burnt Orange/Nutmeg
	J575 0640	1			Silver (b)
	J575 5600	1			Silver (c)
					Left
	J575 6073	1			Bronze/Nutmeg
	J576 1037	1			Brunt Orange/Nutmeg
	J575 0639	1			Silver (b)
	J575 5601	1			Silver (c)
2					DECAL, Door
					Right
	J575 6076	1			Bronze/Nutmeg
	J576 1040	1			Burnt Orange/Nutmeg
	J575 0648	1			Silver (b)
	J575 5596	1			Silver (c)
					Left
	J575 6077	1			Bronze/Nutmeg
	J576 1041	1			Burnt Orange/Nutmeg
	J575 0647	1			Silver (b)
	J575 5597	1			Silver (c)
3					DECAL, Door
	J576 0054-5	1			Bronze/Nutmeg
	J576 1088-9	1			Burnt Orange/Nutmeg
	J576 0052-3	1			Silver
4					DECAL, Rear Quarter
	J576 0062-3	1			Bronze/Nutmeg
	J576 1092-3	1			Burnt Orange/Nutmeg
	J576 0060-1	1			Silver
5					DECAL, Rear Quarter
					Right
	J575 6090	1			Bronze/Nutmeg
	J576 1054	1			Burnt Orange/Nutmeg
	J575 0682	1			Silver (b)
	J575 5434	1			Silver (c)
					Left
	J575 6091	1			Bronze/Nutmeg
	J576 1055	1			Burnt Orange/Nutmeg

MODEL CODES
16=Cherokee 2 Dr.(1981-83)
17=Cherokee 2 Dr.(1981-83)
73=Cherokee 2WD-2 Dr.(1984-86)
74=Cherokee 2WD-4 Dr.(1984-86)
18=Cherokee 4 Dr.(1981-83)
77=Cherokee 4WD-2 Dr.(1984-86)
78=Cherokee 4WD-4 Dr.(1984-86)
85=CJ-5 (1981-83)
86=CJ-6(1981)
87=CJ-7(1981-86)
88=CJ-8, Scrambler(1981-86)
64=Comanche 2WD-6 Ft. Box(1986)
66=Comanche 2WD-7 Ft. Box(1986)
63=Comanche 4WD-6 Ft. Box(1986)
65=Comanche 4WD-7 Ft. Box(1986)
15=Grand Wagoneer 4 Dr.(1984-86)
25=J-10 Truck 7 Ft. Box(1981-84)
26=J10 Truck 8 Ft. Box(1981-86)
27=J-20 Truck 8 Ft. Box(1981-86)
15=Wagoneer 4 Dr.(1981-83)
75=Wagoneer 4WD-4 Dr.(1984-86)

BODY
CJ=CJ-5, CJ-6, CJ-7, CJ-8, Scrambler(1981-86)
MJ=Comanche Pickup(1986)

STYLES
SJ=Wagoneer(1981-83), Grand Wagoneer(1984-86), Cherokee(1981-83), J-10, J-20(1981-86)
XJ=Wagoneer(1984-86), Cherokee(1984-86)

AR = Use as Required - = Non Illustrated Part P.A.R. = Paint as Required

« RETURN TO GROUP INDEX »

DECALS, EXTERIOR LAREDO, 1981-82, TYPE 1 OR 2 SJ CHEROKEE 4 DOOR, MODEL 18
Figure 23-7700

81J68 7700

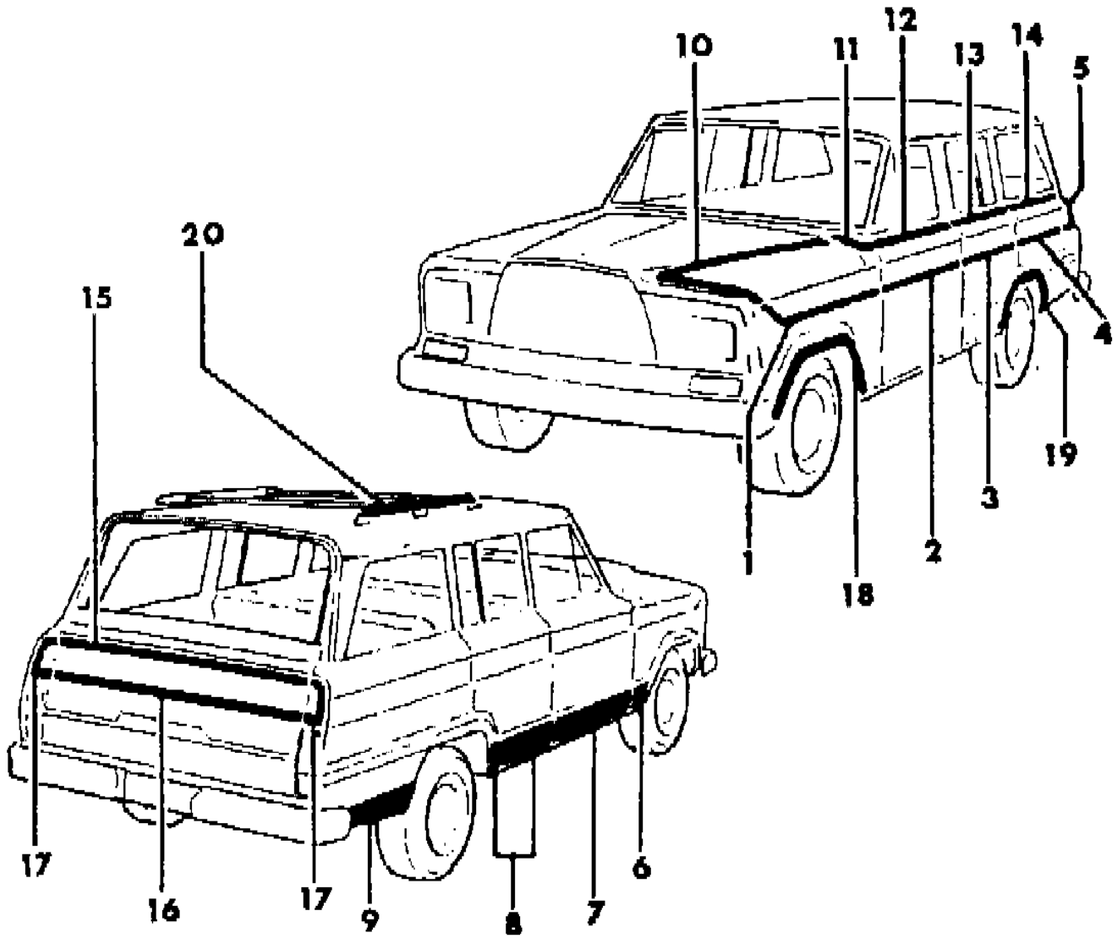

ITEM	PART NUMBER	QTY	BODY	MODEL	DESCRIPTION
	J575 0681	1			Silver (b)
	J575 5435	1			Silver (c)
6					DECAL, Fender
	J576 0034-5	1			Bronze/Nutmeg
	J576 1078-9	1			Burnt Orange/Nutmeg
	J576 0032-3	1			Silver (b)(e)
7					DECAL, Door
					Right
	J575 6070	1			Bronze/Nutmeg
	J576 1034	1			Burnt Orange/Nutmeg
	J575 0624	1			Silver (b)(d)
	J575 5826	1			Silver (c)
					Left
	J575 6071	1			Bronze/Nutmeg
	J576 1035	1			Burnt Orange/Nutmeg
	J575 0623	1			Silver (b)(d)
	J575 5827	1			Silver (c)
8					DECAL, Door and Quarter
	J576 0038-9	1			Bronze/Nutmeg
	J576 1080-1	1			Burnt Orange/Nutmeg
	J576 0036-7	1			Silver (c)(e)
9					DECAL, Rear Quarter
	J576 0046-7	1			Bronze/Nutmeg
	J576 1084-5	1			Burnt Orange/Nutmeg
	J576 0044-5	1			Silver (c)(e)
10					DECAL, Hood
					Right
	J575 6074	1			Bronze/Nutmeg
	J576 1038	1			Burnt Orange/Nutmeg
	J575 0644	1			Silver (b)
	J575 5578	1			Silver (c)
					Left
	J575 6075	1			Bronze/Nutmeg
	J576 1039	1			Burnt Orange/Nutmeg
	J575 0643	1			Silver (b)
	J575 5579	1			Silver (c)
11					DECAL, Cowl
					Right
	J575 6078	1			Bronze/Nutmeg

MODEL CODES
16=Cherokee 2 Dr.(1981-83)
17=Cherokee 2 Dr.(1981-83)
73=Cherokee 2WD-2 Dr.(1984-86)
74=Cherokee 2WD-4 Dr.(1984-86)
18=Cherokee 4 Dr.(1981-83)
77=Cherokee 4WD-2 Dr.(1984-86)
78=Cherokee 4WD-4 Dr.(1984-86)
85=CJ-5 (1981-83)
86=CJ-6(1981)
87=CJ-7(1981-86)
88=CJ-8, Scrambler(1981-86)
64=Comanche 2WD-6 Ft. Box(1986)
66=Comanche 2WD-7 Ft. Box(1986)
63=Comanche 4WD-6 Ft. Box(1986)
65=Comanche 4WD-7 Ft. Box(1986)
15=Grand Wagoneer 4 Dr.(1984-86)
25=J-10 Truck 7 Ft. Box(1981-84)
26=J10 Truck 8 Ft. Box(1981-86)
27=J-20 Truck 8 Ft. Box(1981-86)
15=Wagoneer 4 Dr.(1981-83)
75=Wagoneer 4WD-4 Dr.(1984-86)

BODY
CJ=CJ-5, CJ-6, CJ-7, CJ-8, Scrambler(1981-86)
MJ=Comanche Pickup(1986)

STYLES
SJ=Wagoneer(1981-83), Grand Wagoneer(1984-86), Cherokee(1981-83), J-10, J-20(1981-86)
XJ=Wagoneer(1984-86), Cherokee(1984-86)

AR = Use as Required - = Non Illustrated Part P.A.R. = Paint as Required

81J68 7700

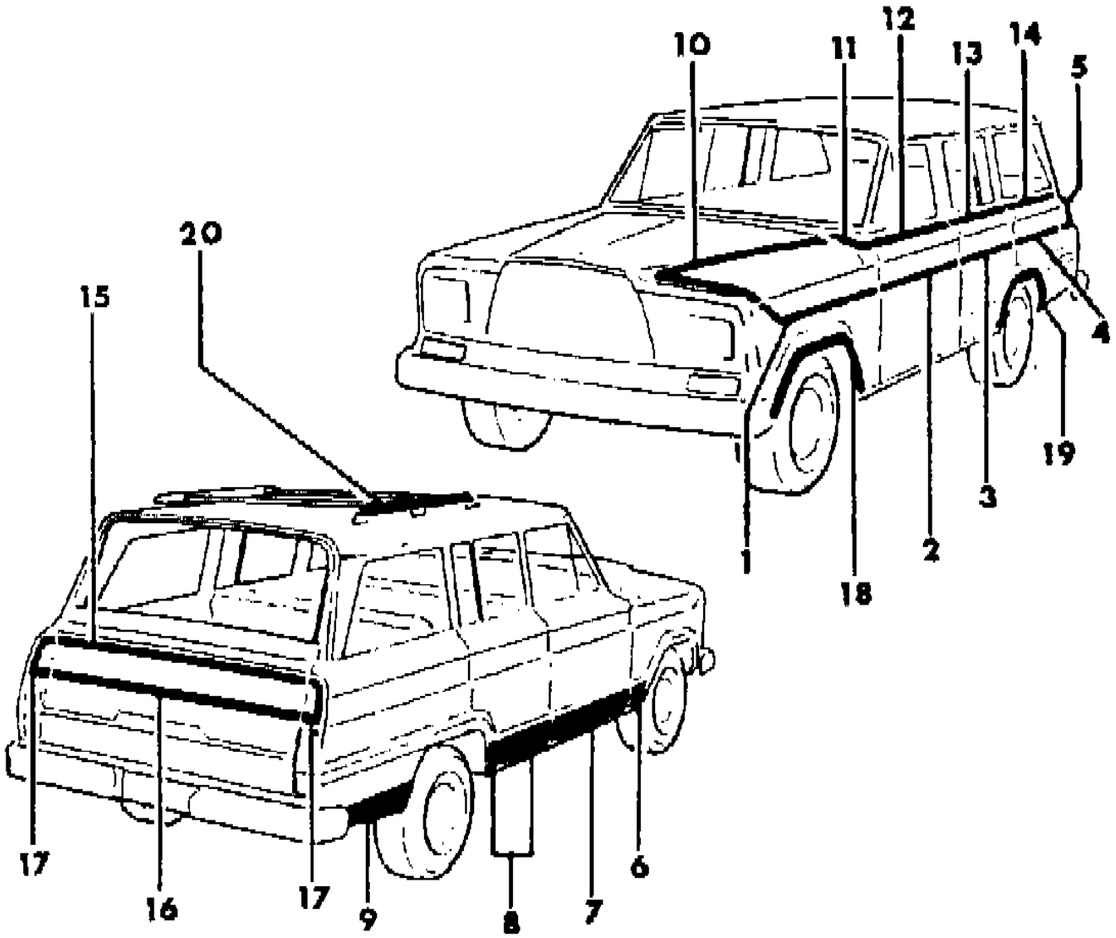

ITEM	PART NUMBER	QTY	BODY	MODEL	DESCRIPTION
	J576 1042	1			Burnt Orange/Nutmeg
	J575 0656	1			Silver (b)
	J575 5584	1			Silver (c)
					Left
	J575 6079	1			Bronze/Nutmeg
	J576 1043	1			Burnt Orange/Nutmeg
	J575 0655	1			Silver (b)
	J575 5585	1			Silver (c)
12					DECAL, Door
					Right
	J575 6080	1			Bronze/Nutmeg
	J576 1044	1			Burnt Orange/Nutmeg
	J575 0660	1			Silver (b)
	J575 5588	1			Silver (c)
					Left
	J575 6081	1			Bronze/Nutmeg
	J576 1045	1			Burnt Orange/Nutmeg
	J575 0659	1			Silver (b)
	J575 5589	1			Silver (c)
13					DECAL, Door
					Right
	J576 0050	1			Bronze/Nutmeg
	J576 1086	1			Burnt Orange/Nutmeg
	J576 0048	1			Silver
					Left
	J576 0051	1			Bronze/Nutmeg
	J576 1087	1			Burnt Orange
	J576 0049	1			Silver
14					DECAL, Rear Quarter
	J576 0058-9	1			Bronze/Nutmeg
	J576 1090-1	1			Burnt Orange/Nutmeg
	J576 0056-7	1			Silver
15					DECAL, Tailgate
	J575 6067	1			Bronze/Nutmeg
	J576 1050	1			Burnt Orange/Nutmeg
	J575 0671	1			Silver (b)
	J575 5574	1			Silver (c)
16					DECAL, Tailgate
	J575 6057	1			Bronze/Nutmeg

MODEL CODES
16=Cherokee 2 Dr.(1981-83)
17=Cherokee 2 Dr.(1981-83)
73=Cherokee 2WD-2 Dr.(1984-86)
74=Cherokee 2WD-4 Dr.(1984-86)
18=Cherokee 4 Dr.(1981-83)
77=Cherokee 4WD-2 Dr.(1984-86)
78=Cherokee 4WD-4 Dr.(1984-86)
85=CJ-5 (1981-83)
86=CJ-6(1981)
87=CJ-7(1981-86)
88=CJ-8, Scrambler(1981-86)
64=Comanche 2WD-6 Ft. Box(1986)
66=Comanche 2WD-7 Ft. Box(1986)
63=Comanche 4WD-6 Ft. Box(1986)
65=Comanche 4WD-7 Ft. Box(1986)
15=Grand Wagoneer 4 Dr.(1984-86)
25=J-10 Truck 7 Ft. Box(1981-84)
26=J10 Truck 8 Ft. Box(1981-86)
27=J-20 Truck 8 Ft. Box(1981-86)
15=Wagoneer 4 Dr.(1981-83)
75=Wagoneer 4WD-4 Dr.(1984-86)

BODY
CJ=CJ-5, CJ-6, CJ-7, CJ-8, Scrambler(1981-86)
MJ=Comanche Pickup(1986)

STYLES
SJ=Wagoneer(1981-83), Grand Wagoneer(1984-86), Cherokee(1981-83), J-10, J-20(1981-86)
XJ=Wagoneer(1984-86), Cherokee(1984-86)

AR = Use as Required - = Non Illustrated Part P.A.R. = Paint as Required

DECALS, EXTERIOR LAREDO, 1981-82, TYPE 1 OR 2 SJ CHEROKEE 4 DOOR, MODEL 18
Figure 23-7700

81J68 7700

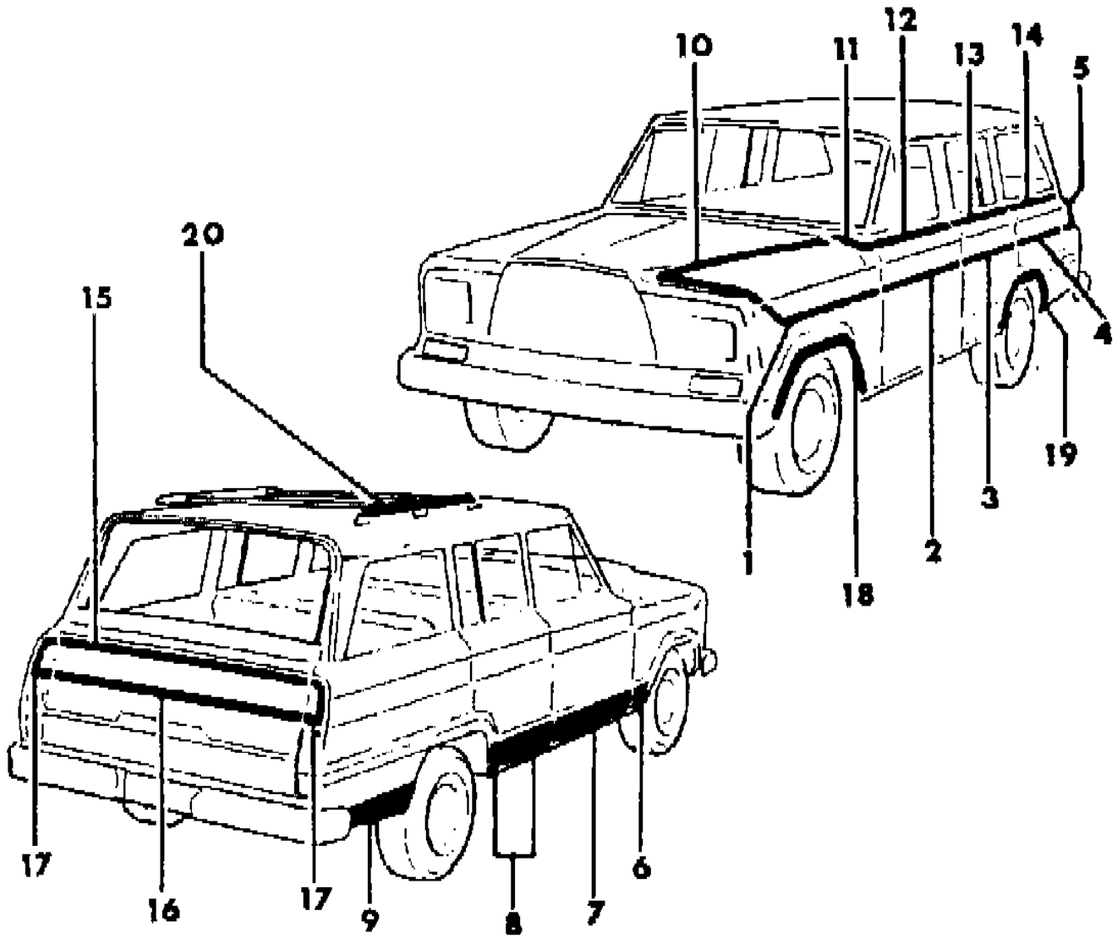

ITEM	PART NUMBER	QTY	BODY	MODEL	DESCRIPTION
	J576 1051	1			Burnt Orange/Nutmeg
	J575 0673	1			Silver (b)
	J575 5576	1			Silver (c)
17					DECAL, Rear Quarter
					Right
	J575 6086	1			Bronze/Nutmeg
	J576 1052	1			Burnt Orange/Nutmeg
	J575 0676	1			Silver (b)
	J575 5570	1			Silver (c)
					Left
	J575 6087	1			Bronze/Nutmeg
	J576 1053	1			Burnt Orange/Nutmeg
	J575 0675	1			Silver (b)
	J575 5571	1			Silver (c)
18					DECAL, Wheel Opening
	J576 0030-1	1			Bronze/Nutmeg
	J576 1076-7	1			Burnt Orange/Nutmeg
	J576 0028-9	1			Silver
19					DECAL, Wheel Opening
	J576 0042-3	1			Bronze/Nutmeg
	J576 1082-3	1			Burnt Orange/Nutmeg
	J576 0040-1	1			Silver
20					Overlay ***
	J813 0669	2			Black (a)

(a) J8130669 is a black overlay 2"x60" (c) These Decals are used on 1983 vehicles after approximately 5-1-83

(b) Area between accent stripe is recessed, body paint is exposed (c) These Decals are used on 1983 vehicles after approximately 5-1-83

(c) Area between accent stripe is clear film, flush with entire decal (c) These Decals are used on 1983 vehicles after approximately 5-1-83

(d) End of decal is open (c) These Decals are used on 1983 vehicles after approximately 5-1-83

(e) End of decal is closed (c) These Decals are used on 1983 vehicles after approximately 5-1-83

MODEL CODES

16=Cherokee 2 Dr.(1981-83)	78=Cherokee 4WD-4 Dr.(1984-86)	64=Comanche 2WD-6 Ft. Box(1986)	25=J-10 Truck 7 Ft. Box(1981-84)
17=Cherokee 2 Dr.(1981-83)	85=CJ-5 (1981-83)	66=Comanche 2WD-7 Ft. Box(1986)	26=J10 Truck 8 Ft. Box(1981-86)
73=Cherokee 2WD-2 Dr.(1984-86)	86=CJ-6(1981)	63=Comanche 4WD-6 Ft. Box(1986)	27=J-20 Truck 8 Ft. Box(1981-86)
74=Cherokee 2WD-4 Dr.(1984-86)	87=CJ-7(1981-86)	65=Comanche 4WD-7 Ft. Box(1986)	15=Wagoneer 4 Dr.(1981-83)
18=Cherokee 4 Dr.(1981-83)	88=CJ-8, Scrambler(1981-86)	15=Grand Wagoneer 4 Dr.(1984-86)	75=Wagoneer 4WD-4 Dr.(1984-86)
77=Cherokee 4WD-2 Dr.(1984-86)			

BODY
CJ=CJ-5, CJ-6, CJ-7, CJ-8, Scrambler(1981-86)
MJ=Comanche Pickup(1986)

STYLES
SJ=Wagoneer(1981-83), Grand Wagoneer(1984-86), Cherokee(1981-83), J-10, J-20(1981-86)
XJ=Wagoneer(1984-86), Cherokee(1984-86)

AR = Use as Required - = Non Illustrated Part P.A.R. = Paint as Required

DECALS, EXTERIOR LAREDO, 1982 TYPE 3 SJ CHEROKEE 4 DOOR, MODEL 18
Figure 23-7800

81J68 7800

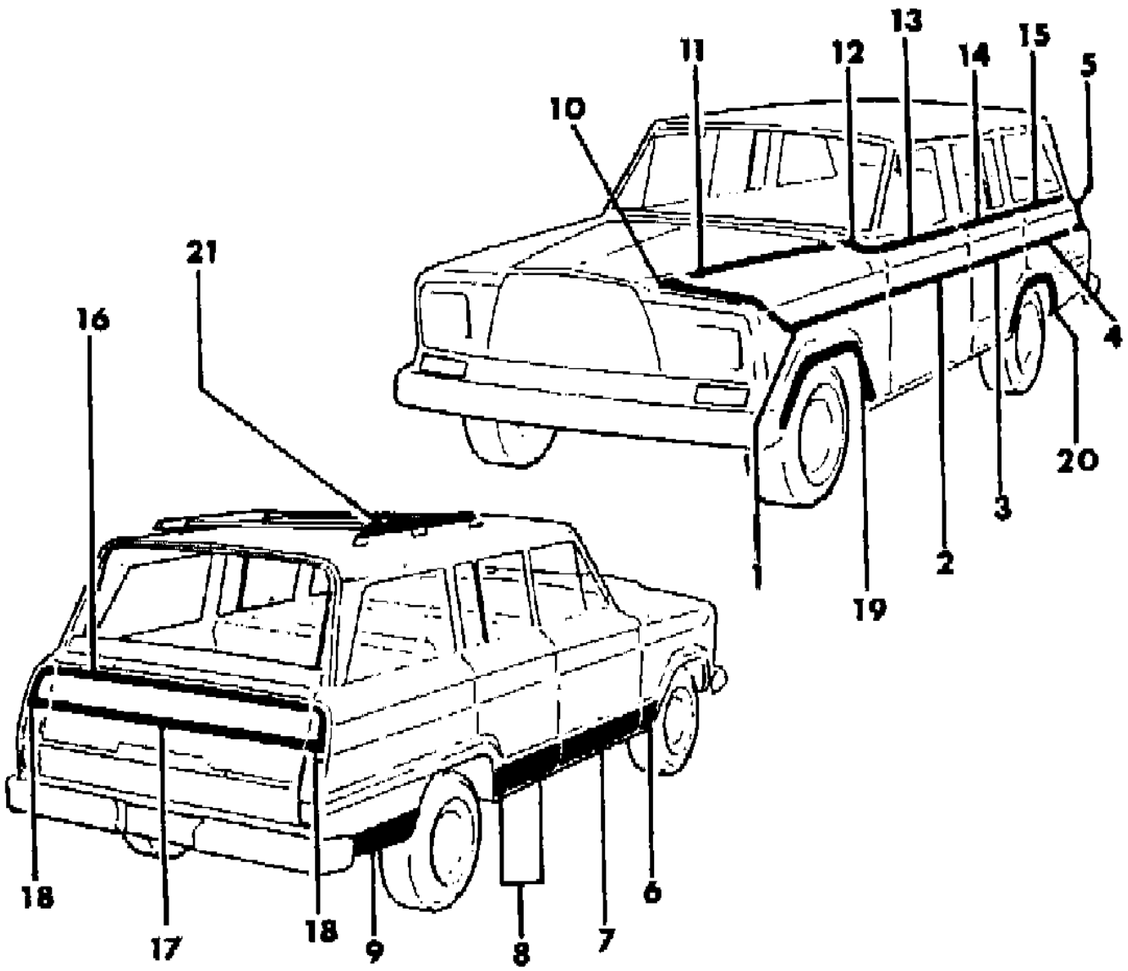

ITEM	PART NUMBER	QTY	BODY	MODEL	DESCRIPTION
1					DECAL, Fender
	J576 3092-3	1			Light Silver/Dark Silver
	J576 3154-5	1			Orange/Nutmeg
2					DECAL, Door
	J576 3098-9	1			Light Silver/Dark Silver
	J576 3160-1	1			Orange/Nutmeg
3					DECAL, Door
	J576 3128-9	1			Light Silver/Dark Silver
	J576 3192-3	1			Orange/Nutmeg
4					DECAL, Rear Quarter
	J576 3132-3	1			Light Silver/Dark Silver
	J576 3196-7	1			Orange/Nutmeg
5					DECAL, Rear Quarter
	J576 3110-1	1			Light Silver/Dark Silver
	J576 3174-5	1			Orange/Nutmeg
6					DECAL, Fender
	J576 3118-9	1			Light Silver/Dark Silver
	J576 3182-3	1			Orange/Nutmeg
7					DECAL, Door
	J576 3090-1	1			Light Silver/Dark Silver
	J576 3152-3	1			Orange/Nutmeg
8					DECAL, Door and Quarter
	J576 3120-1	1			Light Silver/Dark Silver
	J576 3184-5	1			Orange/Nutmeg
9					DECAL, Rear Quarter
	J576 3124-5	1			Light Silver/Dark Silver
	J576 3188-9	1			Orange/Nutmeg
10					DECAL, Hood
	J576 3096-7	1			Light Silver/Dark Silver
	J576 3158-9	1			Orange/Nutmeg
11					DECAL, Hood
	J576 3094-5	1			Light Silver/Dark Silver
	J576 3156-7	1			Orange/ Nutmeg
12					DECAL, Cowl
	J576 3100-1	1			Light Silver/Dark Silver
	J576 3162-3	1			Orange/Nutmeg
13					DECAL, Door
	J576 3102-3	1			Light Silver/Dark Silver
	J576 3164-5	1			Orange/Nutmeg

MODEL CODES

16=Cherokee 2 Dr.(1981-83)
17=Cherokee 2 Dr.(1981-83)
73=Cherokee 2WD-2 Dr.(1984-86)
74=Cherokee 2WD-4 Dr.(1984-86)
18=Cherokee 4 Dr.(1981-83)
77=Cherokee 4WD-2 Dr.(1984-86)
78=Cherokee 4WD-4 Dr.(1984-86)
85=CJ-5 (1981-83)
86=CJ-6(1981)
87=CJ-7(1981-86)
88=CJ-8, Scrambler(1981-86)
64=Comanche 2WD-6 Ft. Box(1986)
66=Comanche 2WD-7 Ft. Box(1986)
63=Comanche 4WD-6 Ft. Box(1986)
65=Comanche 4WD-7 Ft. Box(1986)
15=Grand Wagoneer 4 Dr.(1984-86)
25=J-10 Truck 7 Ft. Box(1981-84)
26=J10 Truck 8 Ft. Box(1981-86)
27=J-20 Truck 8 Ft. Box(1981-86)
15=Wagoneer 4 Dr.(1981-83)
75=Wagoneer 4WD-4 Dr.(1984-86)

BODY
CJ=CJ-5, CJ-6, CJ-7, CJ-8, Scrambler(1981-86)
MJ=Comanche Pickup(1986)

STYLES
SJ=Wagoneer(1981-83), Grand Wagoneer(1984-86), Cherokee(1981-83), J-10, J-20(1981-86)
XJ=Wagoneer(1984-86), Cherokee(1984-86)

AR = Use as Required - = Non Illustrated Part P.A.R. = Paint as Required

DECALS, EXTERIOR LAREDO, 1982 TYPE 3 SJ CHEROKEE 4 DOOR, MODEL 18
Figure 23-7800

81J68 7800

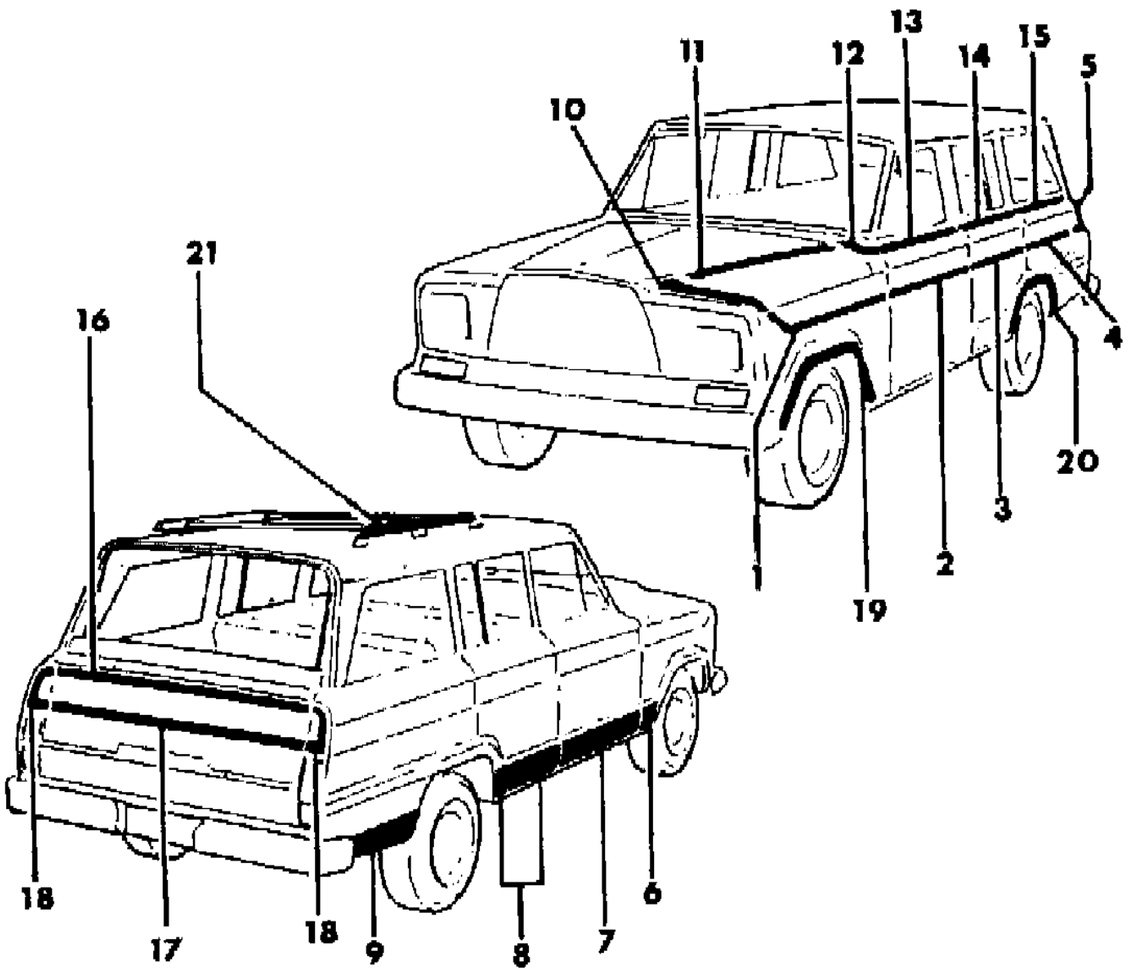

ITEM	PART NUMBER	QTY	BODY	MODEL	DESCRIPTION
14					DECAL, Door
	J576 3126-7	1			Light Silver/Dark Silver
	J576 3190-1	1			Orange/Nutmeg
15					DECAL Rear Quarter ***
	J576 3130-1	1			Light Silver/Dark Silver
	J576 3194-5	1			Orange/Nutmeg
16					DECAL, Tailgate
	J576 3083	1			Light Silver/Dark Silver
	J576 3149	1			Orange/Nutmeg
17					DECAL, Tailgate
	J576 3087	1			Light Silver/Dark Silver
	J576 3170	1			Orange/Nutmeg
18					DECAL, Rear Quarter
	J576 3108-9	1			Light Silver/Dark Silver
	J576 3172-3	1			Orange/Nutmeg
19					DECAL, Wheel Opening
	J576 3116-7	1			Light Silver/Dark Silver
	J576 3180-1	1			Orange/Nutmeg
20					DECAL, Wheel Opening
	J576 3122-3	1			Light Silver/Dark Silver
	J576 3186-7	1			Orange/Nutmeg
21	J813 0669	2			OVERLAY, Black, 2" X 60"

MODEL CODES

16=Cherokee 2 Dr.(1981-83)
17=Cherokee 2 Dr.(1981-83)
73=Cherokee 2WD-2 Dr.(1984-86)
74=Cherokee 2WD-4 Dr.(1984-86)
18=Cherokee 4 Dr.(1981-83)
77=Cherokee 4WD-2 Dr.(1984-86)
78=Cherokee 4WD-4 Dr.(1984-86)
85=CJ-5 (1981-83)
86=CJ-6(1981)
87=CJ-7(1981-86)
88=CJ-8, Scrambler(1981-86)
64=Comanche 2WD-6 Ft. Box(1986)
66=Comanche 2WD-7 Ft. Box(1986)
63=Comanche 4WD-6 Ft. Box(1986)
65=Comanche 4WD-7 Ft. Box(1986)
15=Grand Wagoneer 4 Dr.(1984-86)
25=J-10 Truck 7 Ft. Box(1981-84)
26=J10 Truck 8 Ft. Box(1981-86)
27=J-20 Truck 8 Ft. Box(1981-86)
15=Wagoneer 4 Dr.(1981-83)
75=Wagoneer 4WD-4 Dr.(1984-86)

BODY
CJ=CJ-5, CJ-6, CJ-7, CJ-8, Scrambler(1981-86)
MJ=Comanche Pickup(1986)

STYLES
SJ=Wagoneer(1981-83), Grand Wagoneer(1984-86), Cherokee(1981-83), J-10, J-20(1981-86)
XJ=Wagoneer(1984-86), Cherokee(1984-86)

AR = Use as Required - = Non Illustrated Part P.A.R. = Paint as Required

« RETURN TO GROUP INDEX

NAMEPLATES SJ CHEROKEE 2 DOOR
Figure 23-7900

81J68 7900

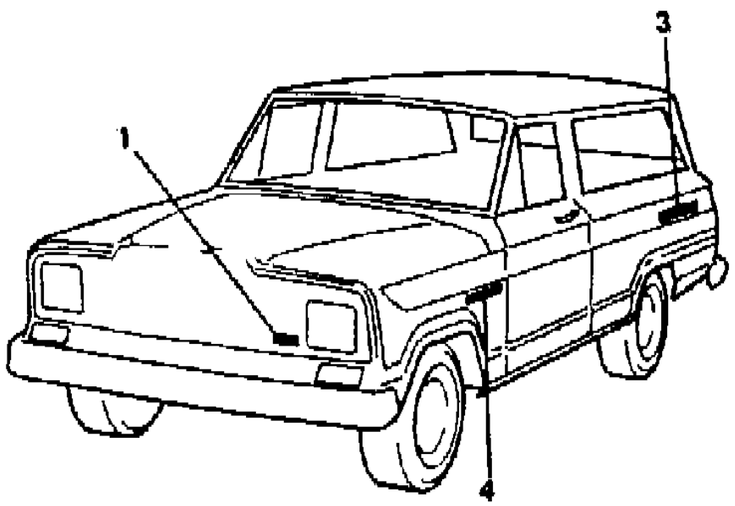

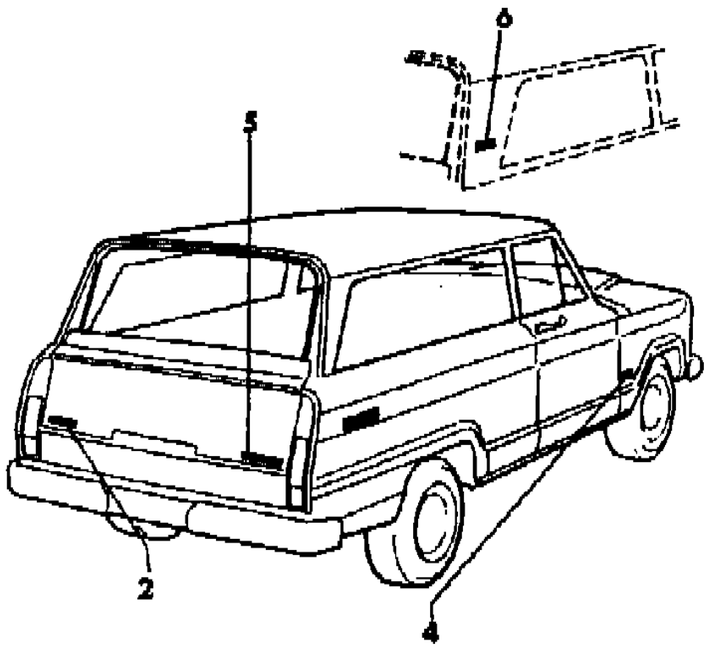

ITEM	PART NUMBER	QTY	BODY	MODEL	DESCRIPTION
1					NAMEPLATE
	J545 1627	1			Jeep
2					NAMEPLATE
	5501 3578	1			V-8
	J545 1627	1			Jeep
3					NAMEPLATE
	5500 7817	2			4x4
	J545 1635	2			4-Wheel Drive
	J576 3574	AR			Selec-Trac
4					NAMEPLATE
	J545 1635	2			4-Wheel Drive
	J546 0834	2			Indian Head
	J545 2506	2			Cherokee
	J575 0834	2			Laredo
5					NAMEPLATE
	J545 1627	1			Jeep
	J545 1635	2			4-Wheel Drive
	J576 3574	AR			Selec-Trac
	J545 1628	1			Quadra-Trac
6					NAMEPLATE
	J545 1635	2			4-Wheel Drive
	J575 0834	2			Laredo

MODEL CODES

16=Cherokee 2 Dr.(1981-83)
17=Cherokee 2 Dr.(1981-83)
73=Cherokee 2WD-2 Dr.(1984-86)
74=Cherokee 2WD-4 Dr.(1984-86)
18=Cherokee 4 Dr.(1981-83)
77=Cherokee 4WD-2 Dr.(1984-86)
78=Cherokee 4WD-4 Dr.(1984-86)
85=CJ-5 (1981-83)
86=CJ-6(1981)
87=CJ-7(1981-86)
88=CJ-8, Scrambler(1981-86)
64=Comanche 2WD-6 Ft. Box(1986)
66=Comanche 2WD-7 Ft. Box(1986)
63=Comanche 4WD-6 Ft. Box(1986)
65=Comanche 4WD-7 Ft. Box(1986)
15=Grand Wagoneer 4 Dr.(1984-86)
25=J-10 Truck 7 Ft. Box(1981-84)
26=J10 Truck 8 Ft. Box(1981-86)
27=J-20 Truck 8 Ft. Box(1981-86)
15=Wagoneer 4 Dr.(1981-83)
75=Wagoneer 4WD-4 Dr.(1984-86)

BODY
CJ=CJ-5, CJ-6, CJ-7, CJ-8, Scrambler(1981-86)
MJ=Comanche Pickup(1986)

STYLES
SJ=Wagoneer(1981-83), Grand Wagoneer(1984-86), Cherokee(1981-83), J-10, J-20(1981-86)
XJ=Wagoneer(1984-86), Cherokee(1984-86)

AR = Use as Required - = Non Illustrated Part P.A.R. = Paint as Required

« RETURN TO GROUP INDEX

MOULDING, EXTERIOR, UPPER SJ CHEROKEE 2 DOOR
Figure 23-8000

81J68 8000

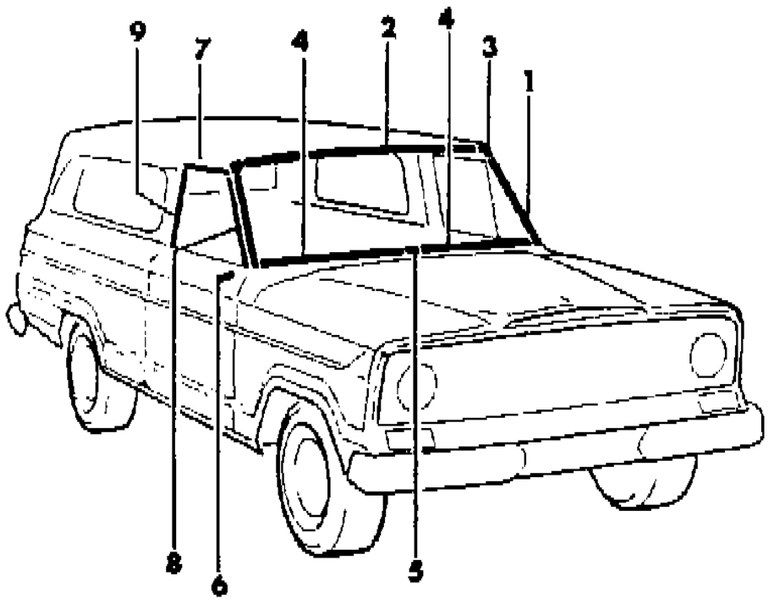

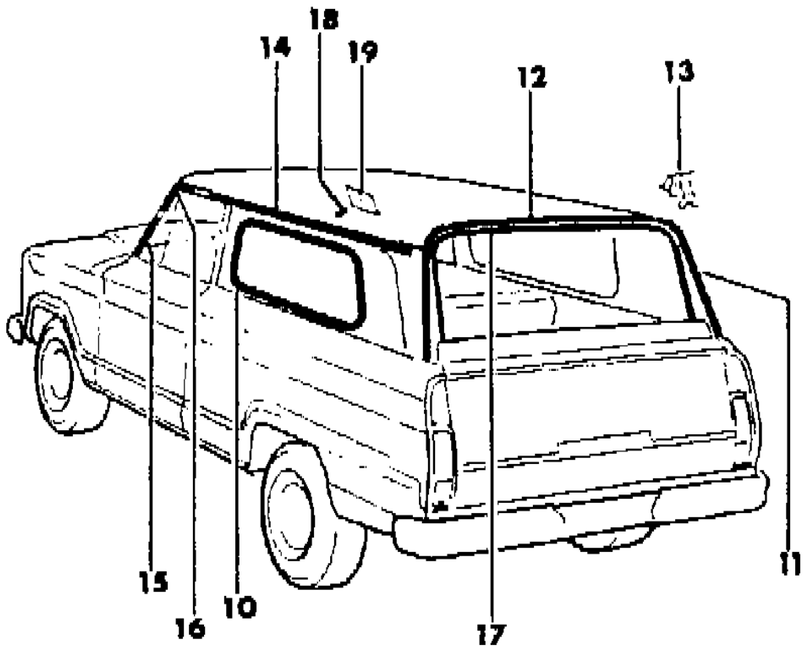

ITEM	PART NUMBER	QTY	BODY	MODEL	DESCRIPTION
1					MOULDING, Windshield, P.A.R.
	J096 8348	1			Right
	J096 8347	1			Left
2	J096 0057	1			MOULDING, Windshield, P.A.R.
3					CAP, Moulding, P.A.R.
	J096 8350	1			Right
	J096 8349	1			Left
4					MOULDING, Windshield, P.A.R.
	J096 1178	1			Right
	J096 1177	1			Left
5	J096 1240	1			CAP, Moulding, P.A.R.
6	J400 6409	AR			SCREW, P.A.R.
7	J575 8506-7	1			MOULDING, Door
8					MOULDING, Door
	J096 0658	1			Right
	J096 0657	1			Left
9					MOULDING, Door
	J096 0834	1			Right
	J096 0833	1			Left
10	J545 2440	2			STRIP, Chrome ***
11					MOULDING, Rear Quarter
	J096 5620	1			Right
	J096 5619	1			Left
12	J096 5623	1			MOULDING, Roof
13	J400 4902	AR			CLIP
14					MOULDING, Drip
	J545 6898	2			Metal
	J576 0634	2			Plastic
15					MOULDING, Drip
	J097 1634	2			Metal
	J576 0635	2			Plastic
16					CAP, Moulding
	J097 1637	2			Metal
	J575 0560	2			Plastic
17	J575 4191	1			MOULDING, Rear Window
18	J096 2022	10			SCREW
19	J096 0882	AR			TRACK, Moulding

MODEL CODES
16=Cherokee 2 Dr.(1981-83)
17=Cherokee 2 Dr.(1981-83)
73=Cherokee 2WD-2 Dr.(1984-86)
74=Cherokee 2WD-4 Dr.(1984-86)
18=Cherokee 4 Dr.(1981-83)
77=Cherokee 4WD-2 Dr.(1984-86)
78=Cherokee 4WD-4 Dr.(1984-86)
85=CJ-5 (1981-83)
86=CJ-6(1981)
87=CJ-7(1981-86)
88=CJ-8, Scrambler(1981-86)
64=Comanche 2WD-6 Ft. Box(1986)
66=Comanche 2WD-7 Ft. Box(1986)
63=Comanche 4WD-6 Ft. Box(1986)
65=Comanche 4WD-7 Ft. Box(1986)
15=Grand Wagoneer 4 Dr.(1984-86)
25=J-10 Truck 7 Ft. Box(1981-84)
26=J10 Truck 8 Ft. Box(1981-86)
27=J-20 Truck 8 Ft. Box(1981-86)
15=Wagoneer 4 Dr.(1981-83)
75=Wagoneer 4WD-4 Dr.(1984-86)

BODY
CJ=CJ-5, CJ-6, CJ-7, CJ-8, Scrambler(1981-86)
MJ=Comanche Pickup(1986)

STYLES
SJ=Wagoneer(1981-83), Grand Wagoneer(1984-86), Cherokee(1981-83), J-10, J-20(1981-86)
XJ=Wagoneer(1984-86), Cherokee(1984-86)

AR = Use as Required - = Non Illustrated Part P.A.R. = Paint as Required

« RETURN TO GROUP INDEX

MOULDINGS, EXTERIOR, LOWER SJ CHEROKEE 2 DOOR, MODEL 16-17
Figure 23-8100

81J68 8100

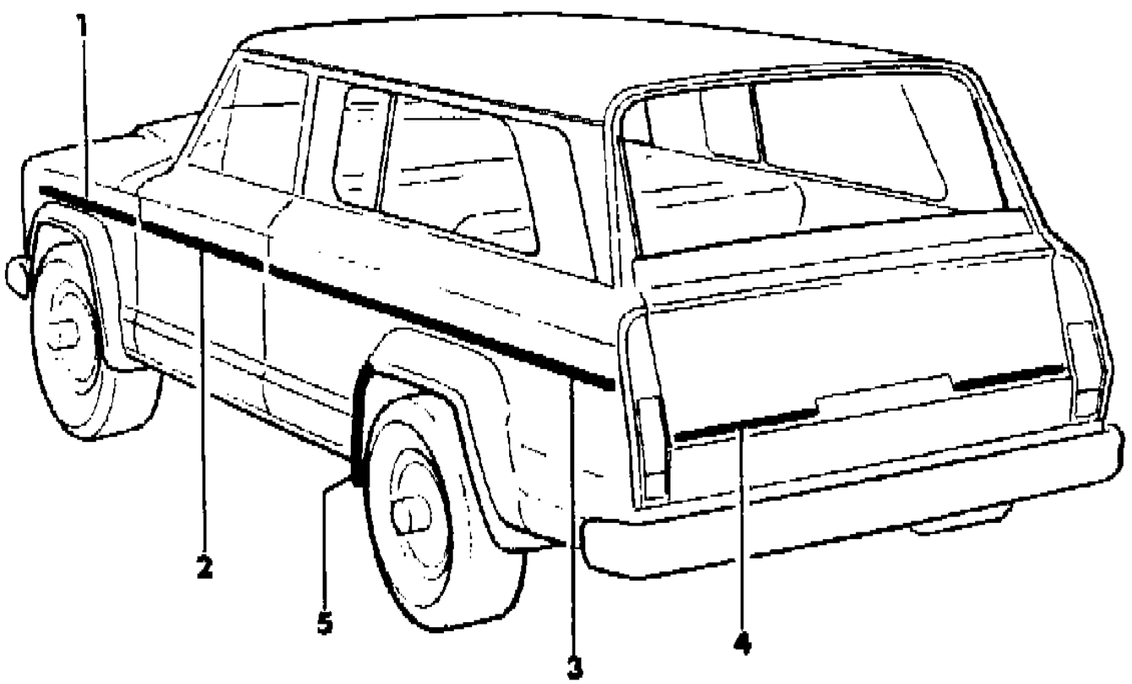

ITEM	PART NUMBER	QTY	BODY	MODEL	DESCRIPTION
1					MOULDING, Fender
	J575 7684-5	1			Black
	J575 7692-3	1			White
2					MOULDING, Door
	J575 7684	1			Black, Modificiation Required
	J575 7692	1			White, Modification Required
3					MOULDING, Rear Quarter
	J575 7690-1	1			Black
	J575 7698-9	1			White
4					MOULDING, Tailgate
	J575 4532	1		17	Right
	J575 4531	1		17	Left
5	J575 3814-5	1		17	PROTECTOR, Clear

MODEL CODES

16=Cherokee 2 Dr.(1981-83)
17=Cherokee 2 Dr.(1981-83)
73=Cherokee 2WD-2 Dr.(1984-86)
74=Cherokee 2WD-4 Dr.(1984-86)
18=Cherokee 4 Dr.(1981-83)
77=Cherokee 4WD-2 Dr.(1984-86)
78=Cherokee 4WD-4 Dr.(1984-86)
85=CJ-5 (1981-83)
86=CJ-6(1981)
87=CJ-7(1981-86)
88=CJ-8, Scrambler(1981-86)
64=Comanche 2WD-6 Ft. Box(1986)
66=Comanche 2WD-7 Ft. Box(1986)
63=Comanche 4WD-6 Ft. Box(1986)
65=Comanche 4WD-7 Ft. Box(1986)
15=Grand Wagoneer 4 Dr.(1984-86)
25=J-10 Truck 7 Ft. Box(1981-84)
26=J10 Truck 8 Ft. Box(1981-86)
27=J-20 Truck 8 Ft. Box(1981-86)
15=Wagoneer 4 Dr.(1981-83)
75=Wagoneer 4WD-4 Dr.(1984-86)

BODY
CJ=CJ-5, CJ-6, CJ-7, CJ-8, Scrambler(1981-86)
MJ=Comanche Pickup(1986)

STYLES
SJ=Wagoneer(1981-83), Grand Wagoneer(1984-86), Cherokee(1981-83), J-10, J-20(1981-86)
XJ=Wagoneer(1984-86), Cherokee(1984-86)

AR = Use as Required - = Non Illustrated Part P.A.R. = Paint as Required

« RETURN TO GROUP INDEX

DECALS, EXTERIOR PIONEER SJ CHEROKEE 2 DOOR, MODEL 16
Figure 23-8200

81J68 8200

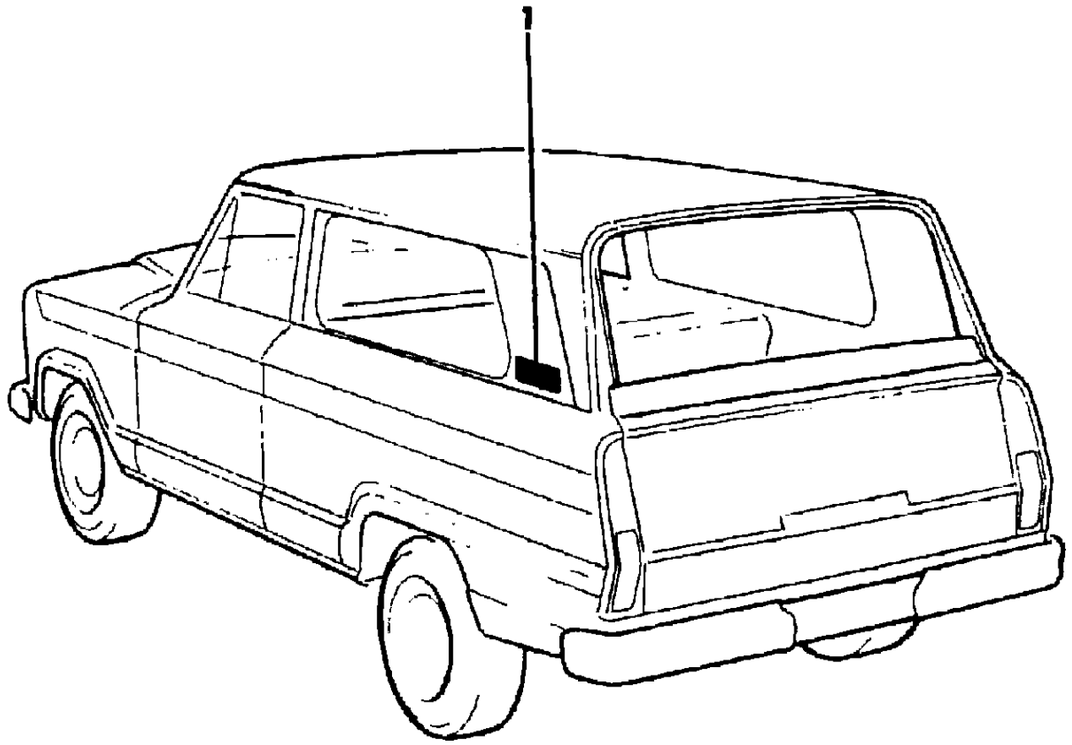

ITEM	PART NUMBER	QTY	BODY	MODEL	DESCRIPTION
1	J576 3505	2			DECAL, Rear Quarter

MODEL CODES
16=Cherokee 2 Dr.(1981-83)
17=Cherokee 2 Dr.(1981-83)
73=Cherokee 2WD-2 Dr.(1984-86)
74=Cherokee 2WD-4 Dr.(1984-86)
18=Cherokee 4 Dr.(1981-83)
77=Cherokee 4WD-2 Dr.(1984-86)
78=Cherokee 4WD-4 Dr.(1984-86)
85=CJ-5 (1981-83)
86=CJ-6(1981)
87=CJ-7(1981-86)
88=CJ-8, Scrambler(1981-86)
64=Comanche 2WD-6 Ft. Box(1986)
66=Comanche 2WD-7 Ft. Box(1986)
63=Comanche 4WD-6 Ft. Box(1986)
65=Comanche 4WD-7 Ft. Box(1986)
15=Grand Wagoneer 4 Dr.(1984-86)
25=J-10 Truck 7 Ft. Box(1981-84)
26=J10 Truck 8 Ft. Box(1981-86)
27=J-20 Truck 8 Ft. Box(1981-86)
15=Wagoneer 4 Dr.(1981-83)
75=Wagoneer 4WD-4 Dr.(1984-86)

BODY
CJ=CJ-5, CJ-6, CJ-7, CJ-8, Scrambler(1981-86)
MJ=Comanche Pickup(1986)

STYLES
SJ=Wagoneer(1981-83), Grand Wagoneer(1984-86), Cherokee(1981-83), J-10, J-20(1981-86)
XJ=Wagoneer(1984-86), Cherokee(1984-86)

AR = Use as Required - = Non Illustrated Part P.A.R. = Paint as Required

« RETURN TO GROUP INDEX

DECALS, EXTERIOR CHIEF SJ CHEROKEE 2 DOOR, MODEL 17
Figure 23-8300

81J68 8300

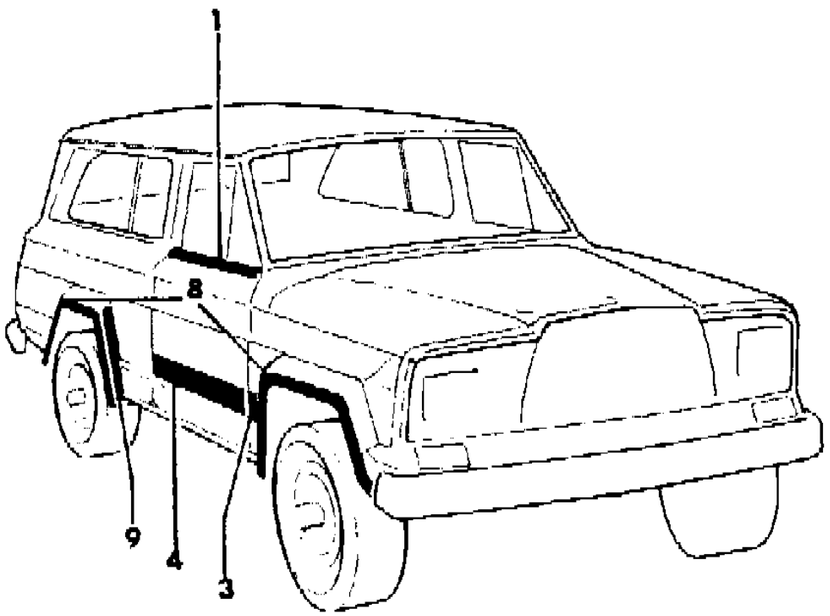

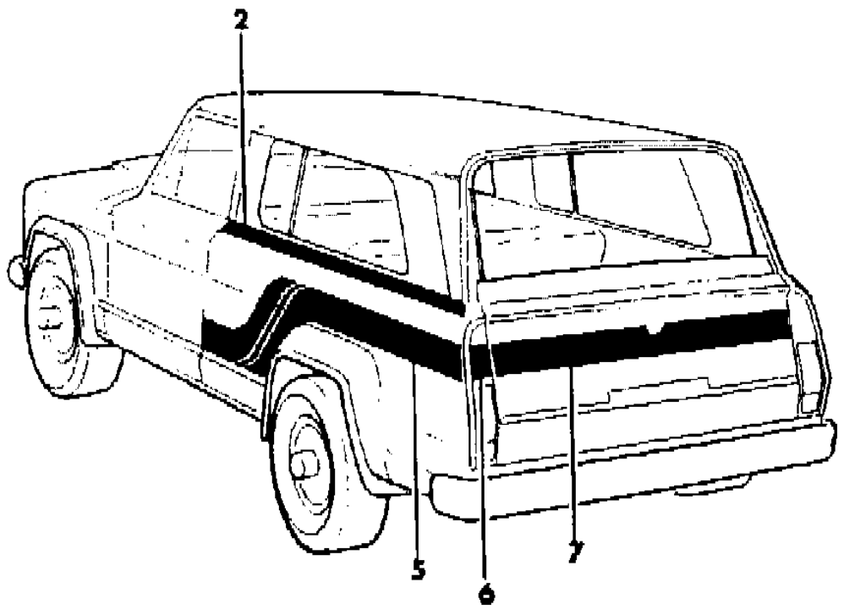

ITEM	PART NUMBER	QTY	BODY	MODEL	DESCRIPTION
1	J575 5372-3	1			DECAL, Door
2	J575 5374-5	1			DECAL, Rear Quarter
3	J575 5376-7	1			DECAL, Fender
4	J575 5378-9	1			DECAL, Door
5	J575 5380-1	1			DECAL, Rear Quarter
6	J575 5382-3	1			DECAL, Rear Quarter
7	J575 5385	1			DECAL, Tailgate
8	J813 0322-3	1			DECAL, Wheel Opening
9	J575 3814-5	1			PROTECTOR, Clear

MODEL CODES

16=Cherokee 2 Dr.(1981-83)
17=Cherokee 2 Dr.(1981-83)
73=Cherokee 2WD-2 Dr.(1984-86)
74=Cherokee 2WD-4 Dr.(1984-86)
18=Cherokee 4 Dr.(1981-83)
77=Cherokee 4WD-2 Dr.(1984-86)
78=Cherokee 4WD-4 Dr.(1984-86)
85=CJ-5 (1981-83)
86=CJ-6(1981)
87=CJ-7(1981-86)
88=CJ-8, Scrambler(1981-86)
64=Comanche 2WD-6 Ft. Box(1986)
66=Comanche 2WD-7 Ft. Box(1986)
63=Comanche 4WD-6 Ft. Box(1986)
65=Comanche 4WD-7 Ft. Box(1986)
15=Grand Wagoneer 4 Dr.(1984-86)
25=J-10 Truck 7 Ft. Box(1981-84)
26=J10 Truck 8 Ft. Box(1981-86)
27=J-20 Truck 8 Ft. Box(1981-86)
15=Wagoneer 4 Dr.(1981-83)
75=Wagoneer 4WD-4 Dr.(1984-86)

BODY
CJ=CJ-5, CJ-6, CJ-7, CJ-8, Scrambler(1981-86)
MJ=Comanche Pickup(1986)

STYLES
SJ=Wagoneer(1981-83), Grand Wagoneer(1984-86), Cherokee(1981-83), J-10, J-20(1981-86)
XJ=Wagoneer(1984-86), Cherokee(1984-86)

AR = Use as Required - = Non Illustrated Part P.A.R. = Paint as Required

« RETURN TO GROUP INDEX

DECALS, EXTERIOR LAREDO, 1982-1982 TYPE 1 OR 2 SJ CHEROKEE 2 DOOR, MODEL 17
Figure 23-8400

81J68 8400

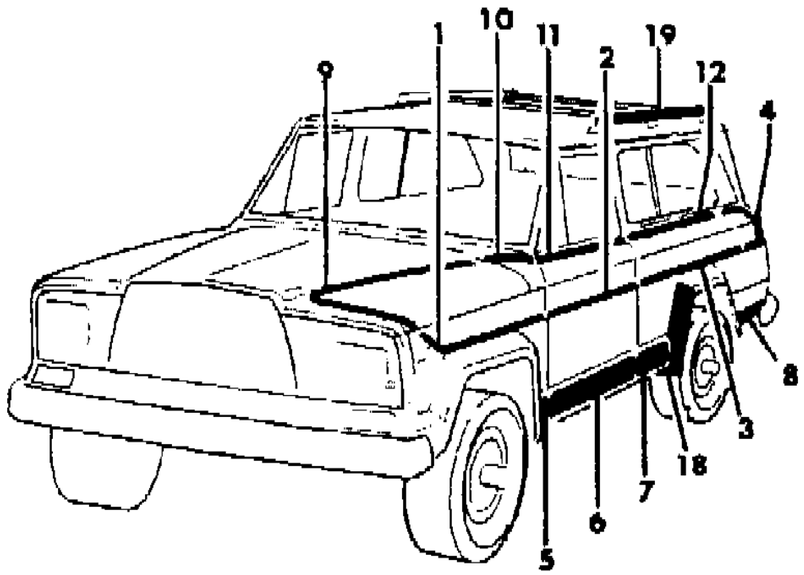

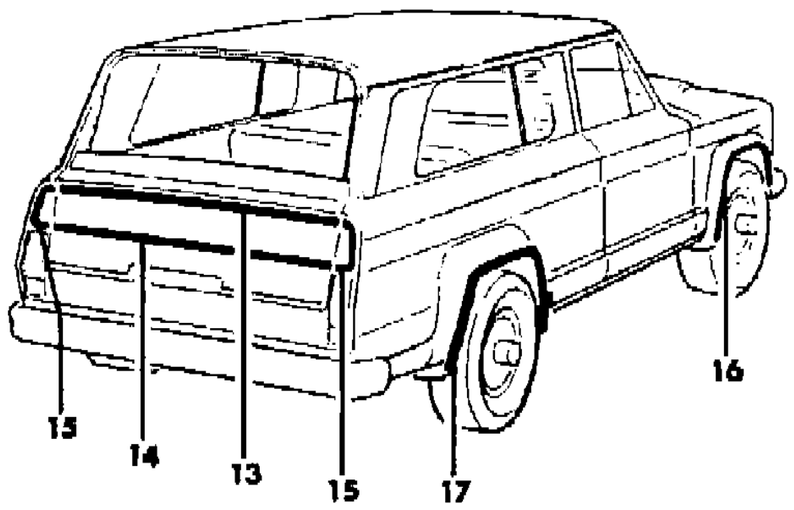

ITEM	PART NUMBER	QTY	BODY	MODEL	DESCRIPTION
1					DECAL, Fender
					Right
	J575 6072	1			Bronze/Nutmeg
	J576 1036	1			Burnt Orange/Nutmeg
	J575 0640	1			Silver (b)
	J575 5600	1			Silver (c)
					Left
	J575 6073	1			Bronze/Nutmeg
	J576 1037	1			Burnt Orange/Nutmeg
	J575 0639	1			Silver (b)
	J575 5601	1			Silver (c)
2					DECAL, Door
					Right
	J575 6076	1			Bronze/Nutmeg
	J576 1040	1			Burnt Orange/Nutmeg
	J575 0648	1			Silver (b)
	J575 5596	1			Silver (c)
					Left
	J575 6077	1			Bronze/Nutmeg
	J576 1041	1			Burnt Orange/Nutmeg
	J575 0647	1			Silver (b)
	J575 5597	1			Silver (c)
3					DECAL, Rear Quarter
					Right
	J575 7606	1			Bronze/Nutmeg
	J576 1058	1			Burnt Orange/Nutmeg
	J575 0679	1			Silver (b)
	J575 5430	1			Silver (c)
					Left
	J575 7607	1			Bronze/Nutmeg
	J576 1059	1			Burnt Orange/Nutmeg
	J575 0679	1			Silver (b)
	J575 5431	1			Silver (c)
4					DECAL, Rear Quarter
					Right
	J575 6090	1			Bronze/Nutmeg
	J576 1054	1			Burnt Orange/Nutmeg
	J575 0682	1			Silver (b)
	J575 5434	1			Silver (c)

MODEL CODES

16=Cherokee 2 Dr.(1981-83)	78=Cherokee 4WD-4 Dr.(1984-86)	64=Comanche 2WD-6 Ft. Box(1986)	25=J-10 Truck 7 Ft. Box(1981-84)
17=Cherokee 2 Dr.(1981-83)	85=CJ-5 (1981-83)	66=Comanche 2WD-7 Ft. Box(1986)	26=J10 Truck 8 Ft. Box(1981-86)
73=Cherokee 2WD-2 Dr.(1984-86)	86=CJ-6(1981)	63=Comanche 4WD-6 Ft. Box(1986)	27=J-20 Truck 8 Ft. Box(1981-86)
74=Cherokee 2WD-4 Dr.(1984-86)	87=CJ-7(1981-86)	65=Comanche 4WD-7 Ft. Box(1986)	15=Wagoneer 4 Dr.(1981-83)
18=Cherokee 4 Dr.(1981-83)	88=CJ-8, Scrambler(1981-86)	15=Grand Wagoneer 4 Dr.(1984-86)	75=Wagoneer 4WD-4 Dr.(1984-86)
77=Cherokee 4WD-2 Dr.(1984-86)			

BODY
CJ=CJ-5, CJ-6, CJ-7, CJ-8, Scrambler(1981-86)
MJ=Comanche Pickup(1986)

STYLES
SJ=Wagoneer(1981-83), Grand Wagoneer(1984-86), Cherokee(1981-83), J-10, J-20(1981-86)
XJ=Wagoneer(1984-86), Cherokee(1984-86)

AR = Use as Required - = Non Illustrated Part P.A.R. = Paint as Required

DECALS, EXTERIOR LAREDO, 1982-1982 TYPE 1 OR 2 SJ CHEROKEE 2 DOOR, MODEL 17
Figure 23-8400

81J68 8400

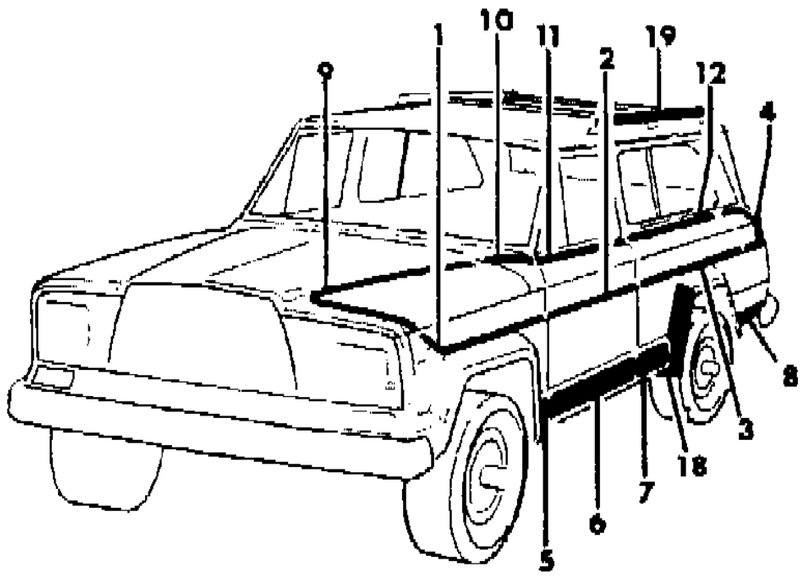

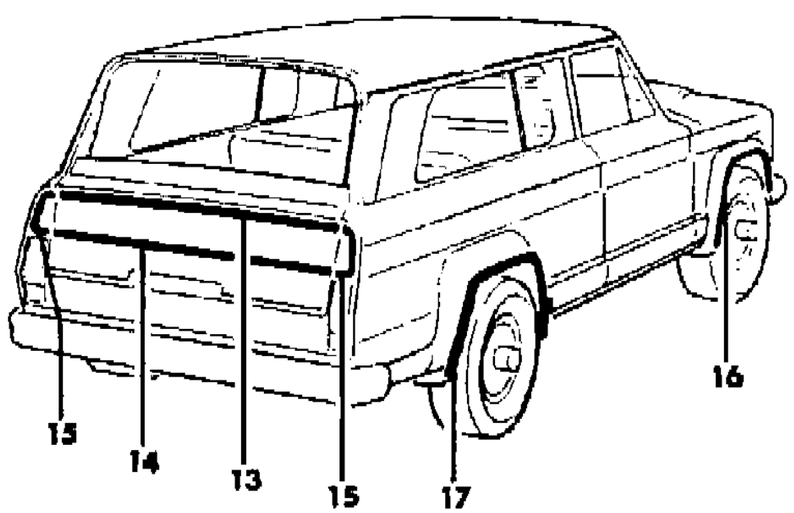

ITEM	PART NUMBER	QTY	BODY	MODEL	DESCRIPTION
					Left
	J575 6091	1			Bronze/Nutmeg
	J576 1055	1			Burnt Orange/Nutmeg
	J575 0681	1			Silver (b)
	J575 5435	1			Silver (c)
5					DECAL, Fender
					Right
	J575 6068	1			Bronze/Nutmeg
	J576 1032	1			Burnt Orange/Nutmeg
	J575 0620	1			Silver (b)(d)
	J575 4914	1			Silver (c)(e)
					Left
	J575 6069	1			Bronze/Nutmeg
	J576 1033	1			Burnt Orange/Nutmeg
	J575 0619	1			Silver (b)(d)
	J575 4913	1			Silver (c)(e)
6					DECAL, Door
					Right
	J575 6070	1			Bronze/Nutmeg
	J576 1034	1			Burnt Orange/Nutmeg
	J575 0624	1			Silver (b)
	J575 5826	1			Silver (c)
					Left
	J575 6071	1			Bronze/Nutmeg
	J576 1035	1			Burnt Orange/Nutmeg
	J575 0623	1			Silver (b)
	J575 5827	1			Silver (c)
7					DECAL, Rear Quarter
					Right
	J575 6082	1			Bronze/Nutmeg
	J576 1046	1			Burnt Orange/Nutmeg
	J575 0664	1			Silver (b)(d)
	J575 4898	1			Silver (c)(e)
					Left
	J575 6083	1			Bronze/Nutmeg
	J576 1047	1			Burnt Orange/Nutmeg
	J575 0663	1			Silver (b)
	J575 4897	1			Silver (c)
8					DECAL, Rear Quarter

MODEL CODES
16=Cherokee 2 Dr.(1981-83)
17=Cherokee 2 Dr.(1981-83)
73=Cherokee 2WD-2 Dr.(1984-86)
74=Cherokee 2WD-4 Dr.(1984-86)
18=Cherokee 4 Dr.(1981-83)
77=Cherokee 4WD-2 Dr.(1984-86)
78=Cherokee 4WD-4 Dr.(1984-86)
85=CJ-5 (1981-83)
86=CJ-6(1981)
87=CJ-7(1981-86)
88=CJ-8, Scrambler(1981-86)
64=Comanche 2WD-6 Ft. Box(1986)
66=Comanche 2WD-7 Ft. Box(1986)
63=Comanche 4WD-6 Ft. Box(1986)
65=Comanche 4WD-7 Ft. Box(1986)
15=Grand Wagoneer 4 Dr.(1984-86)
25=J-10 Truck 7 Ft. Box(1981-84)
26=J10 Truck 8 Ft. Box(1981-86)
27=J-20 Truck 8 Ft. Box(1981-86)
15=Wagoneer 4 Dr.(1981-83)
75=Wagoneer 4WD-4 Dr.(1984-86)

BODY
CJ=CJ-5, CJ-6, CJ-7, CJ-8, Scrambler(1981-86)
MJ=Comanche Pickup(1986)

STYLES
SJ=Wagoneer(1981-83), Grand Wagoneer(1984-86), Cherokee(1981-83), J-10, J-20(1981-86)
XJ=Wagoneer(1984-86), Cherokee(1984-86)

AR = Use as Required - = Non Illustrated Part P.A.R. = Paint as Required

DECALS, EXTERIOR LAREDO, 1982-1982 TYPE 1 OR 2 SJ CHEROKEE 2 DOOR, MODEL 17
Figure 23-8400

81J68 8400

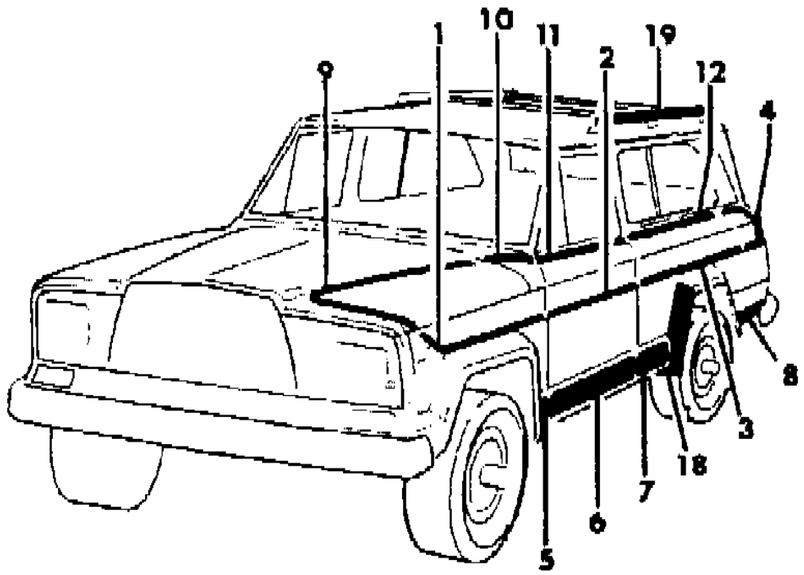

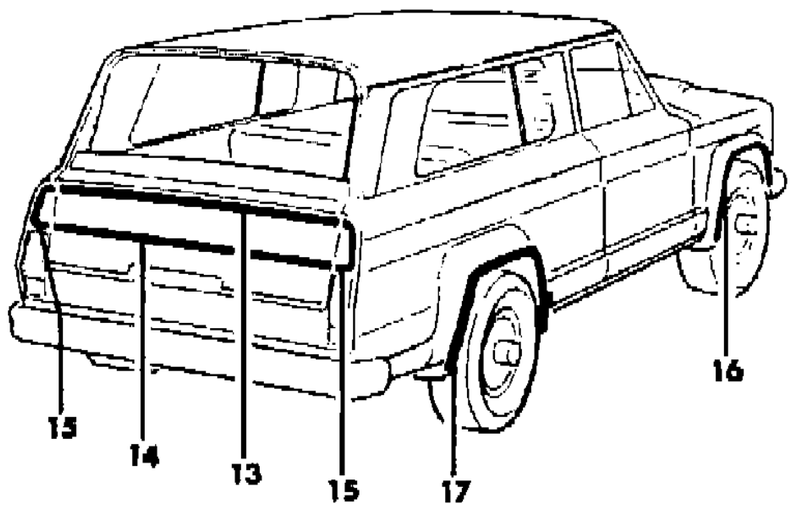

ITEM	PART NUMBER	QTY	BODY	MODEL	DESCRIPTION
					Right
	J575 6084	1			Bronze/Nutmeg
	J576 1048	1			Burnt Orange/Nutmeg
	J575 0668	1			Silver (b)(d)
	J575 4894	1			Silver (c)(e)
					Left
	J575 6085	1			Bronze/Nutmeg
	J576 1049	1			Burnt Orange/Nutmeg
	J575 0667	1			Silver (b)(d)
	J575 4893	1			Silver (c)(e)
9					DECAL, Hood
					Right
	J575 6074	1			Bronze/Nutmeg
	J576 1038	1			Burnt Orange/Nutmeg
	J575 0644	1			Silver (b)
	J575 5578	1			Silver (c)
					Left
	J575 6075	1			Bronze/Nutmeg
	J576 1039	1			Burnt Orange/Nutmeg
	J575 0643	1			Silver (b)
	J575 5579	1			Silver (c)
10					DECAL, Cowl
					Right
	J575 6078	1			Bronze/Nutmeg
	J576 1042	1			Burnt Orange/Nutmeg
	J575 0656	1			Silver (b)
	J575 5584	1			Silver (c)
					Left
	J575 6079	1			Bronze/Nutmeg
	J576 1043	1			Burnt Orange/Nutmeg
	J575 0655	1			Silver (b)
	J575 5585	1			Silver (c)
11					DECAL, Door
					Right
	J575 6080	1			Bronze/Nutmeg
	J576 1044	1			Burnt Orange/Nutmeg
	J575 0660	1			Silver (b)
	J575 5588	1			Silver (c)
					Left

MODEL CODES

16=Cherokee 2 Dr.(1981-83)	78=Cherokee 4WD-4 Dr.(1984-86)	64=Comanche 2WD-6 Ft. Box(1986)	25=J-10 Truck 7 Ft. Box(1981-84)
17=Cherokee 2 Dr.(1981-83)	85=CJ-5 (1981-83)	66=Comanche 2WD-7 Ft. Box(1986)	26=J10 Truck 8 Ft. Box(1981-86)
73=Cherokee 2WD-2 Dr.(1984-86)	86=CJ-6(1981)	63=Comanche 4WD-6 Ft. Box(1986)	27=J-20 Truck 8 Ft. Box(1981-86)
74=Cherokee 2WD-4 Dr.(1984-86)	87=CJ-7(1981-86)	65=Comanche 4WD-7 Ft. Box(1986)	15=Wagoneer 4 Dr.(1981-83)
18=Cherokee 4 Dr.(1981-83)	88=CJ-8, Scrambler(1981-86)	15=Grand Wagoneer 4 Dr.(1984-86)	75=Wagoneer 4WD-4 Dr.(1984-86)
77=Cherokee 4WD-2 Dr.(1984-86)			

BODY
CJ=CJ-5, CJ-6, CJ-7, CJ-8, Scrambler(1981-86)
MJ=Comanche Pickup(1986)

STYLES
SJ=Wagoneer(1981-83), Grand Wagoneer(1984-86), Cherokee(1981-83), J-10, J-20(1981-86)
XJ=Wagoneer(1984-86), Cherokee(1984-86)

AR = Use as Required - = Non Illustrated Part P.A.R. = Paint as Required

81J68 8400

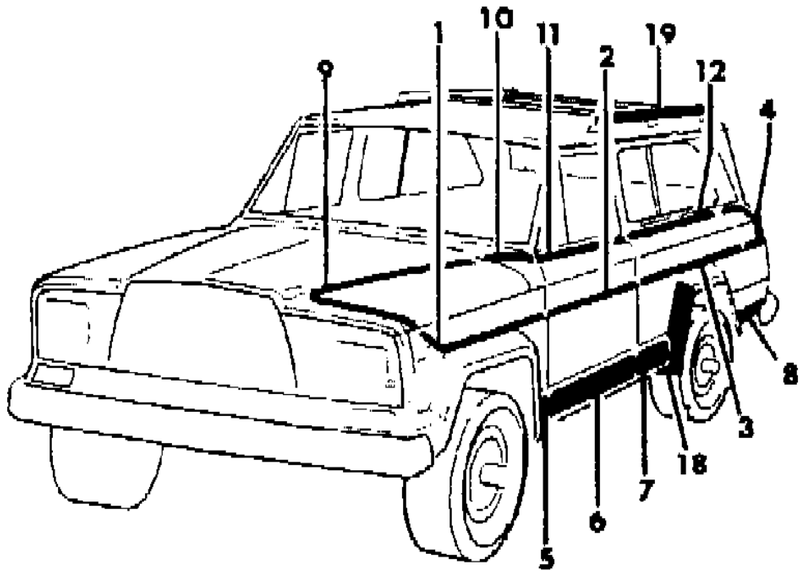

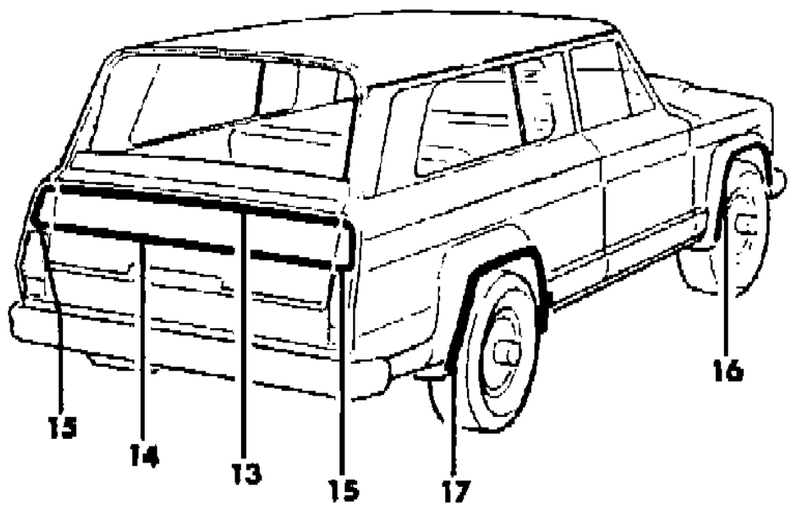

ITEM	PART NUMBER	QTY	BODY	MODEL	DESCRIPTION
	J575 6081	1			Bronze/Nutmeg
	J576 1045	1			Burnt Orange/Nutmeg
	J575 0659	1			Silver (b)
	J575 5589	1			Silver (c)
12					DECAL, Rear Quarter
					Right
	J575 6088	1			Bronze/Nutmeg
	J576 1056	1			Burnt Orange/Nutmeg
	J575 0679	1			Silver (b)
	J575 5426	1			Silver (c)
					Left
	J575 7605	1			Bronze/Nutmeg
	J576 1057	1			Burnt Orange/Nutmeg
	J575 0679	1			Silver (b)
	J575 5427	1			Silver (c)
13					DECAL, Tailgate
	J575 6067	1			Bronze/Nutmeg
	J576 1050	1			Burnt Orange/Nutmeg
	J575 0671	1			Silver (b)
	J575 5574	1			Silver (c)
14					DECAL, Tailgate
	J575 6057	1			Bronze/Nutmeg
	J576 1051	1			Burnt Orange/Nutmeg
	J575 0673	1			Silver (b)
	J575 5576	1			Silver (c)
15					DECAL, Rear Quarter
					Right
	J575 6086	1			Bronze/Nutmeg
	J576 1052	1			Burnt Orange/Nutmeg
	J575 0676	1			Silver (b)
	J575 5570	1			Silver (c)
					Left
	J575 6087	1			Bronze/Nutmeg
	J576 1053	1			Burnt Orange/Nutmeg
	J575 0675	1			Silver (b)
	J575 5571	1			Silver (c)
16					DECAL, Wheel Opening
					Right
	J575 6044	1			Bronze/Nutmeg

MODEL CODES

16=Cherokee 2 Dr.(1981-83)	78=Cherokee 4WD-4 Dr.(1984-86)	64=Comanche 2WD-6 Ft. Box(1986)	25=J-10 Truck 7 Ft. Box(1981-84)
17=Cherokee 2 Dr.(1981-83)	85=CJ-5 (1981-83)	66=Comanche 2WD-7 Ft. Box(1986)	26=J10 Truck 8 Ft. Box(1981-86)
73=Cherokee 2WD-2 Dr.(1984-86)	86=CJ-6(1981)	63=Comanche 4WD-6 Ft. Box(1986)	27=J-20 Truck 8 Ft. Box(1981-86)
74=Cherokee 2WD-4 Dr.(1984-86)	87=CJ-7(1981-86)	65=Comanche 4WD-7 Ft. Box(1986)	15=Wagoneer 4 Dr.(1981-83)
18=Cherokee 4 Dr.(1981-83)	88=CJ-8, Scrambler(1981-86)	15=Grand Wagoneer 4 Dr.(1984-86)	75=Wagoneer 4WD-4 Dr.(1984-86)
77=Cherokee 4WD-2 Dr.(1984-86)			

BODY
CJ=CJ-5, CJ-6, CJ-7, CJ-8, Scrambler(1981-86)
MJ=Comanche Pickup(1986)

STYLES
SJ=Wagoneer(1981-83), Grand Wagoneer(1984-86), Cherokee(1981-83), J-10, J-20(1981-86)
XJ=Wagoneer(1984-86), Cherokee(1984-86)

AR = Use as Required - = Non Illustrated Part P.A.R. = Paint as Required

DECALS, EXTERIOR LAREDO, 1982-1982 TYPE 1 OR 2 SJ CHEROKEE 2 DOOR, MODEL 17
Figure 23-8400

81J68 8400

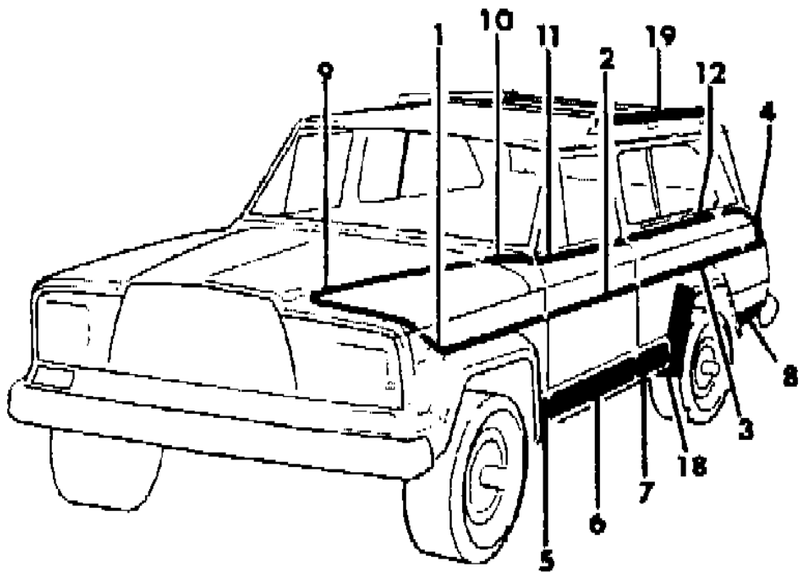

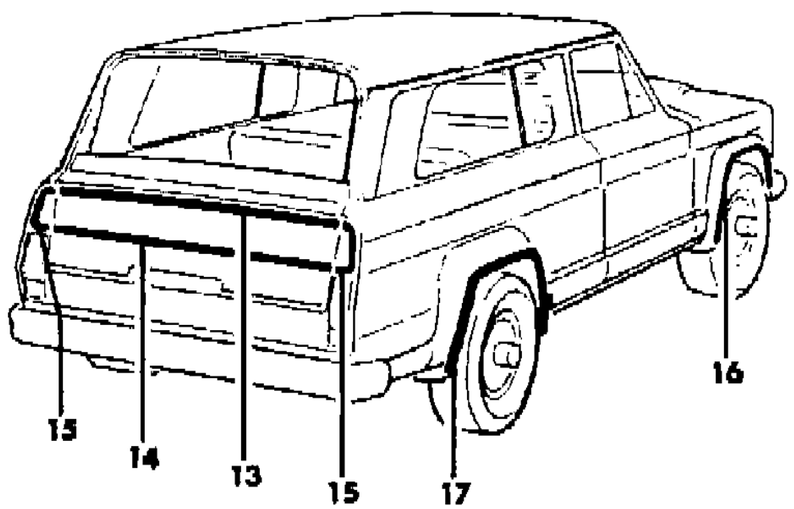

ITEM	PART NUMBER	QTY	BODY	MODEL	DESCRIPTION
	J576 1028	1			Burnt Orange/Nutmeg
	J575 0600	1			Silver (b)
	J575 5560	1			Silver (c)
					Left
	J575 6045	1			Bronze/Nutmeg
	J576 1029	1			Burnt Orange/Nutmeg
	J575 0599	1			Silver (b)
	J575 5561	1			Silver (c)
17					DECAL, Wheel Opening
	J575 6056	2			Bronze/Nutmeg
	J576 1030	2			Burnt Orange/Nutmeg
	J575 0603	2			Silver (b)
	J575 5564	2			Silver (c)
18		1			PROTECTOR, Clear
	J575 3814	1			Right
	J575 3815	1			Left
19					OVERLAY
	J813 0669	2			Black

(a) J8130669 is a black overlay 2"x60" (c) These Decals are used on 1983 vehicles after approximately 5-1-83

(b) Area between accent stripes is recessed, body paint is exposed (c) These Decals are used on 1983 vehicles after approximately 5-1-83

(c) Area between accent stripes is clear film, flush with entire decal (c) These Decals are used on 1983 vehicles after approximately 5-1-83

(d) End of decal is open (c) These Decals are used on 1983 vehicles after approximately 5-1-83

(e) End of decal is closed (c) These Decals are used on 1983 vehicles after approximately 5-1-83

MODEL CODES

16=Cherokee 2 Dr.(1981-83)
17=Cherokee 2 Dr.(1981-83)
73=Cherokee 2WD-2 Dr.(1984-86)
74=Cherokee 2WD-4 Dr.(1984-86)
18=Cherokee 4 Dr.(1981-83)
77=Cherokee 4WD-2 Dr.(1984-86)
78=Cherokee 4WD-4 Dr.(1984-86)
85=CJ-5 (1981-83)
86=CJ-6(1981)
87=CJ-7(1981-86)
88=CJ-8, Scrambler(1981-86)
64=Comanche 2WD-6 Ft. Box(1986)
66=Comanche 2WD-7 Ft. Box(1986)
63=Comanche 4WD-6 Ft. Box(1986)
65=Comanche 4WD-7 Ft. Box(1986)
15=Grand Wagoneer 4 Dr.(1984-86)
25=J-10 Truck 7 Ft. Box(1981-84)
26=J10 Truck 8 Ft. Box(1981-86)
27=J-20 Truck 8 Ft. Box(1981-86)
15=Wagoneer 4 Dr.(1981-83)
75=Wagoneer 4WD-4 Dr.(1984-86)

BODY
CJ=CJ-5, CJ-6, CJ-7, CJ-8, Scrambler(1981-86)
MJ=Comanche Pickup(1986)

STYLES
SJ=Wagoneer(1981-83), Grand Wagoneer(1984-86), Cherokee(1981-83), J-10, J-20(1981-86)
XJ=Wagoneer(1984-86), Cherokee(1984-86)

AR = Use as Required - = Non Illustrated Part P.A.R. = Paint as Required

DECALS, EXTERIOR LAREDO, TYPE 3, 1983 SJ CHEROKEE 2 DOOR, MODEL 17
Figure 23-8500

81J68 8500

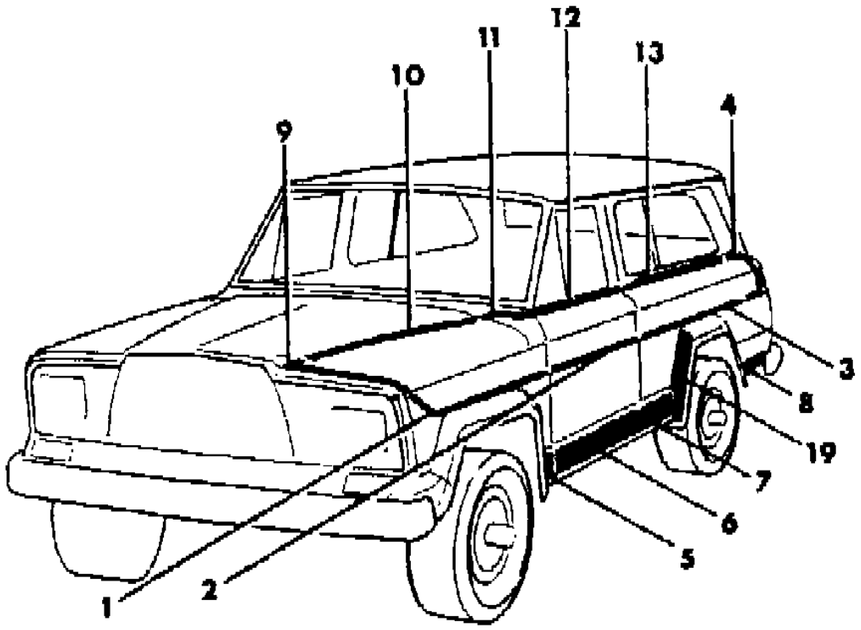

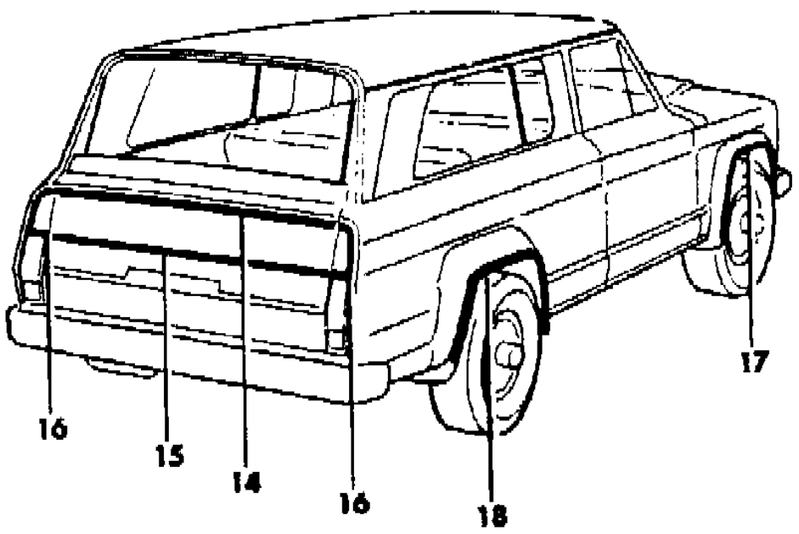

ITEM	PART NUMBER	QTY	BODY	MODEL	DESCRIPTION
1					DECAL, Fender
	J576 3092-3	1			Light Silver/Dark Silver
	J576 3154-5	1			Orange/Nutmeg
2					DECAL, Door
	J576 3098-9	1			Light Dilver/Dark Silver
	J576 3160-1	1			Orange/Nutmeg
3					DECAL, Rear Quarter
	J576 3114-5	1			Light Silver/Dark Silver
	J576 3178-9	1			Orange/Nutmeg
4					DECAL, Rear Quarter
	J576 3110-1	1			Light Silver/Dark Silver
	J576 3174-5	1			Orange/Nutmeg
5					DECAL, Fender
	J576 3088-9	1			Light Silver/Dark Silver
	J576 3150-1	1			Orange/Nutmeg
6					DECAL, Door
	J576 3090-1	1			Light Silver/Dark Silver
	J576 3152-3	1			Orange/Nutmeg
7					DECAL, Rear Quarter
	J576 3104-5	1			Light Silver/Dark Silver
	J576 3166-7	1			Orange/Nutmeg
8					DECAL, Rear Quarter
	J576 3106-7	1			Light Silver/Dark Silver
	J576 3168-9	1			Orange/Nutmeg
9					DECAL, Hood
	J576 3096-7	1			Light Silver/Dark Silver
	J576 3158-9	1			Orange/Nutmeg
10					DECAL, Hood
	J576 3094-5	1			Light Silver/Dark Silver
	J576 3156-7	1			Orange/Nutmeg
11					DECAL, Cowl
	J576 3100-1	1			Light Silver/Dark Silver
	J576 3162-3	1			Orange/Nutmeg
12					DECAL, Door
	J576 3102-3	1			Light Silver/Dark Silver
	J576 3164-5	1			Orange/Nutmeg
13					DECAL, Rear Quarter
	J576 3112-3	1			Light Silver/Dark Silver
	J576 3176-7	1			Orange/Nutmeg

MODEL CODES

16=Cherokee 2 Dr.(1981-83)
17=Cherokee 2 Dr.(1981-83)
73=Cherokee 2WD-2 Dr.(1984-86)
74=Cherokee 2WD-4 Dr.(1984-86)
18=Cherokee 4 Dr.(1981-83)
77=Cherokee 4WD-2 Dr.(1984-86)
78=Cherokee 4WD-4 Dr.(1984-86)
85=CJ-5 (1981-83)
86=CJ-6(1981)
87=CJ-7(1981-86)
88=CJ-8, Scrambler(1981-86)
64=Comanche 2WD-6 Ft. Box(1986)
66=Comanche 2WD-7 Ft. Box(1986)
63=Comanche 4WD-6 Ft. Box(1986)
65=Comanche 4WD-7 Ft. Box(1986)
15=Grand Wagoneer 4 Dr.(1984-86)
25=J-10 Truck 7 Ft. Box(1981-84)
26=J10 Truck 8 Ft. Box(1981-86)
27=J-20 Truck 8 Ft. Box(1981-86)
15=Wagoneer 4 Dr.(1981-83)
75=Wagoneer 4WD-4 Dr.(1984-86)

BODY
CJ=CJ-5, CJ-6, CJ-7, CJ-8, Scrambler(1981-86)
MJ=Comanche Pickup(1986)

STYLES
SJ=Wagoneer(1981-83), Grand Wagoneer(1984-86), Cherokee(1981-83), J-10, J-20(1981-86)
XJ=Wagoneer(1984-86), Cherokee(1984-86)

AR = Use as Required - = Non Illustrated Part P.A.R. = Paint as Required

« RETURN TO GROUP INDEX »

DECALS, EXTERIOR LAREDO, TYPE 3, 1983 SJ CHEROKEE 2 DOOR, MODEL 17
Figure 23-8500

81J68 8500

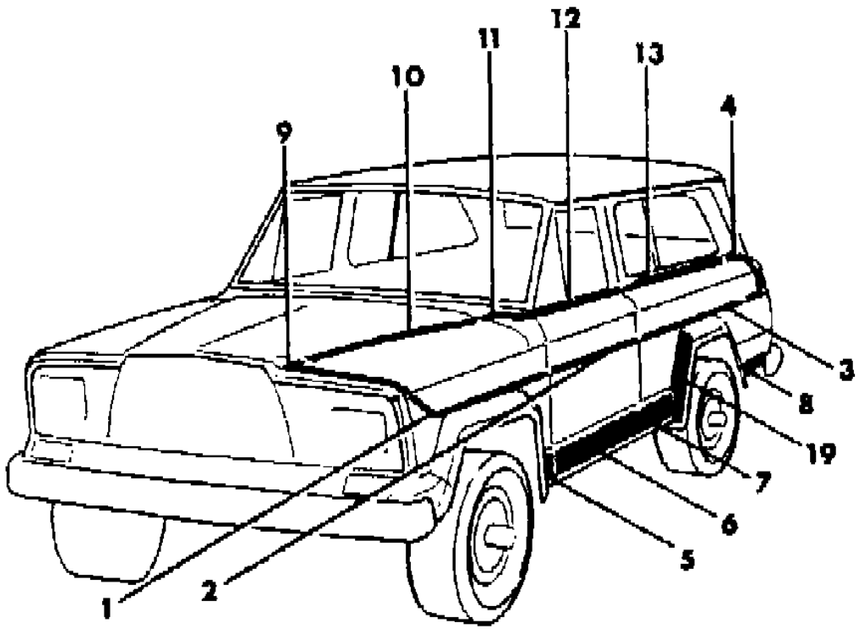

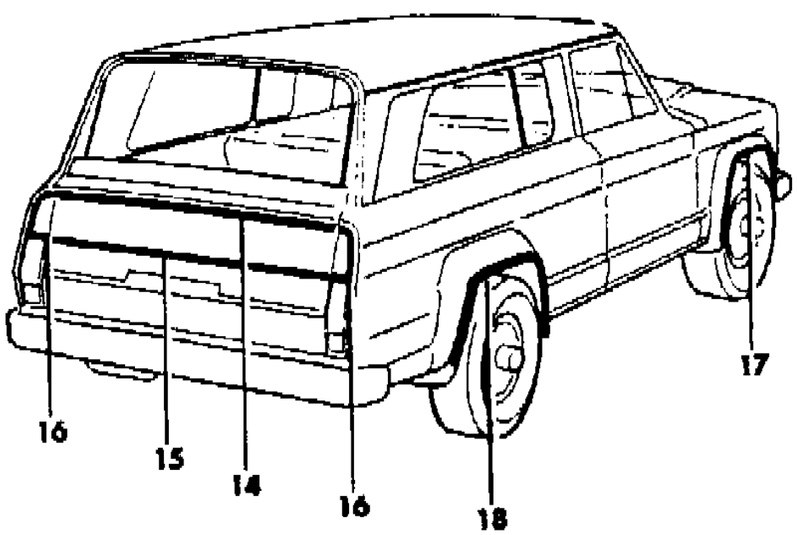

ITEM	PART NUMBER	QTY	BODY	MODEL	DESCRIPTION
14					DECAL, Tailgate
	J576 3083	1			Light Silver/Dark Silver
	J576 3149	1			Orange/Nutmeg
15					DECAL, Tailgate
	J576 3087	1			Light Silver/Dark Silver
	J576 3170	1			Orange/Nutmeg
16					DECAL, Rear Quarter
	J576 3108-9	1			Light Silver/Dark Silver
	J576 3172-3	1			Orange/Nutmeg
17					DECAL, Wheel Opening
	J576 3084-5	1			Light Silver/Dark Silver
	J576 3146-7	1			Orange/Nutmeg
18					DECAL, Wheel Opening
	J576 3086	2			Light Silver/Dark Silver
	J576 3148	2			Orange/Nutmeg
19	J575 3814-5	1			PROTECTOR, Clear

MODEL CODES

16=Cherokee 2 Dr.(1981-83)
17=Cherokee 2 Dr.(1981-83)
73=Cherokee 2WD-2 Dr.(1984-86)
74=Cherokee 2WD-4 Dr.(1984-86)
18=Cherokee 4 Dr.(1981-83)
77=Cherokee 4WD-2 Dr.(1984-86)
78=Cherokee 4WD-4 Dr.(1984-86)
85=CJ-5 (1981-83)
86=CJ-6(1981)
87=CJ-7(1981-86)
88=CJ-8, Scrambler(1981-86)
64=Comanche 2WD-6 Ft. Box(1986)
66=Comanche 2WD-7 Ft. Box(1986)
63=Comanche 4WD-6 Ft. Box(1986)
65=Comanche 4WD-7 Ft. Box(1986)
15=Grand Wagoneer 4 Dr.(1984-86)
25=J-10 Truck 7 Ft. Box(1981-84)
26=J10 Truck 8 Ft. Box(1981-86)
27=J-20 Truck 8 Ft. Box(1981-86)
15=Wagoneer 4 Dr.(1981-83)
75=Wagoneer 4WD-4 Dr.(1984-86)

BODY
CJ=CJ-5, CJ-6, CJ-7, CJ-8, Scrambler(1981-86)
MJ=Comanche Pickup(1986)

STYLES
SJ=Wagoneer(1981-83), Grand Wagoneer(1984-86), Cherokee(1981-83), J-10, J-20(1981-86)
XJ=Wagoneer(1984-86), Cherokee(1984-86)

AR = Use as Required - = Non Illustrated Part P.A.R. = Paint as Required

« RETURN TO GROUP INDEX

NAMPLATES SJ WAGONEER
Figure 23-8600

81J68 8600

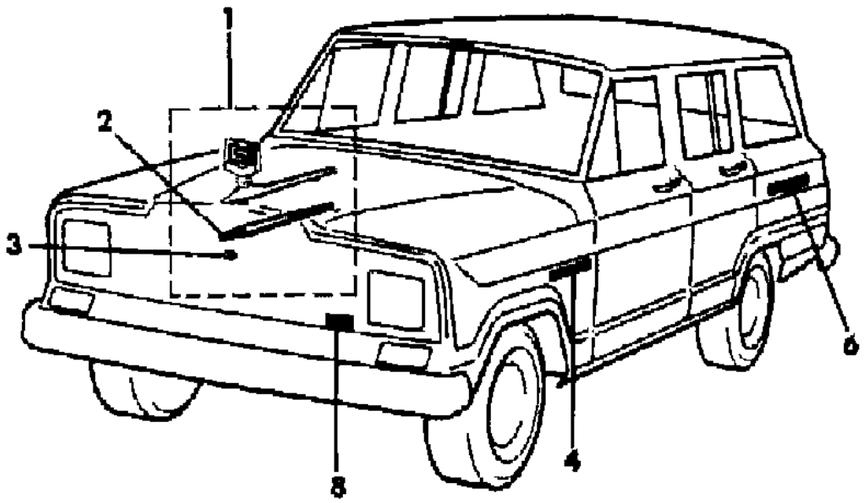

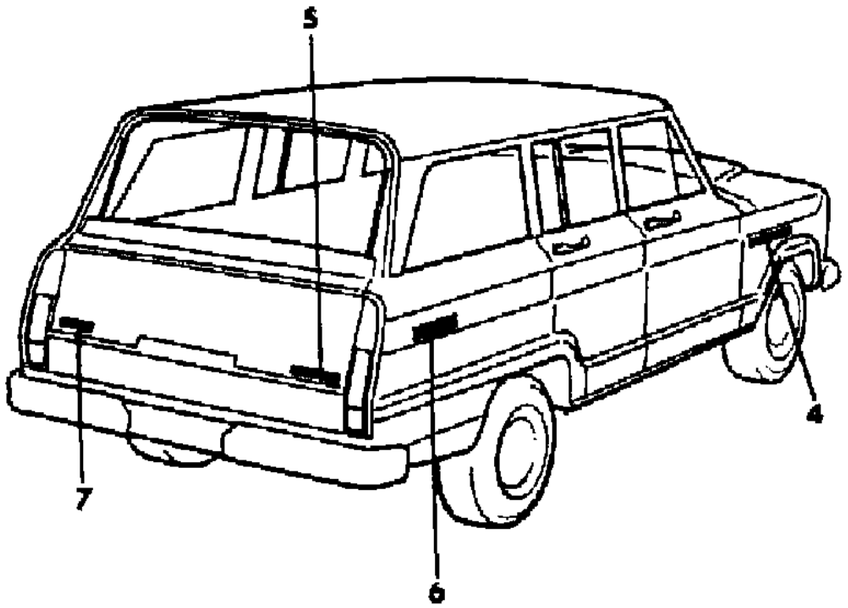

ITEM	PART NUMBER	QTY	BODY	MODEL	DESCRIPTION
1	8350 2503	1			ORNAMENT KIT, Hood ***
2	5501 0384	1			GASKET
3	J942 0287	2			NUT
4					NAMEPLATE
	J545 1637	2			Wagoneer
	5501 3577	3			Grand Wagoneer
	J545 1635	2			4-Wheel Drive
	J576 5039	2			Grand
	J546 6357	2			Limited
	J576 1172	2			Brougham
	J813 0050	2			DL, Australian Design Rules
5					NAMEPLATE
	5501 3577	3			Grand Wagoneer
	J545 1627	1			Jeep
	J545 1635	2			4-Wheel Drive
	J576 3574	AR			Selec-Trac
	J545 1628	1			Quadra-Trac
6					NAMEPLATE
	J545 1637	2			Wagoneer
	J545 1627	1			Jeep
	5500 7817	2			4x4
	J545 1635	2			4-Wheel Drive
	J576 3574	AR			Selec-Trac
7					NAMEPLATE
	J545 1627	1			Jeep
	5501 3578	1			V-8
	J546 6357	2			Limited
8					NAMEPLATE
	J545 1627	1			Jeep

MODEL CODES

16=Cherokee 2 Dr.(1981-83)
17=Cherokee 2 Dr.(1981-83)
73=Cherokee 2WD-2 Dr.(1984-86)
74=Cherokee 2WD-4 Dr.(1984-86)
18=Cherokee 4 Dr.(1981-83)
77=Cherokee 4WD-2 Dr.(1984-86)
78=Cherokee 4WD-4 Dr.(1984-86)
85=CJ-5 (1981-83)
86=CJ-6(1981)
87=CJ-7(1981-86)
88=CJ-8, Scrambler(1981-86)
64=Comanche 2WD-6 Ft. Box(1986)
66=Comanche 2WD-7 Ft. Box(1986)
63=Comanche 4WD-6 Ft. Box(1986)
65=Comanche 4WD-7 Ft. Box(1986)
15=Grand Wagoneer 4 Dr.(1984-86)
25=J-10 Truck 7 Ft. Box(1981-84)
26=J10 Truck 8 Ft. Box(1981-86)
27=J-20 Truck 8 Ft. Box(1981-86)
15=Wagoneer 4 Dr.(1981-83)
75=Wagoneer 4WD-4 Dr.(1984-86)

BODY
CJ=CJ-5, CJ-6, CJ-7, CJ-8, Scrambler(1981-86)
MJ=Comanche Pickup(1986)

STYLES
SJ=Wagoneer(1981-83), Grand Wagoneer(1984-86), Cherokee(1981-83), J-10, J-20(1981-86)
XJ=Wagoneer(1984-86), Cherokee(1984-86)

AR = Use as Required - = Non Illustrated Part P.A.R. = Paint as Required

« RETURN TO GROUP INDEX

MOULDINGS, EXTERIOR, UPPER SJ WAGONEER
Figure 23-8700

81J68 8700

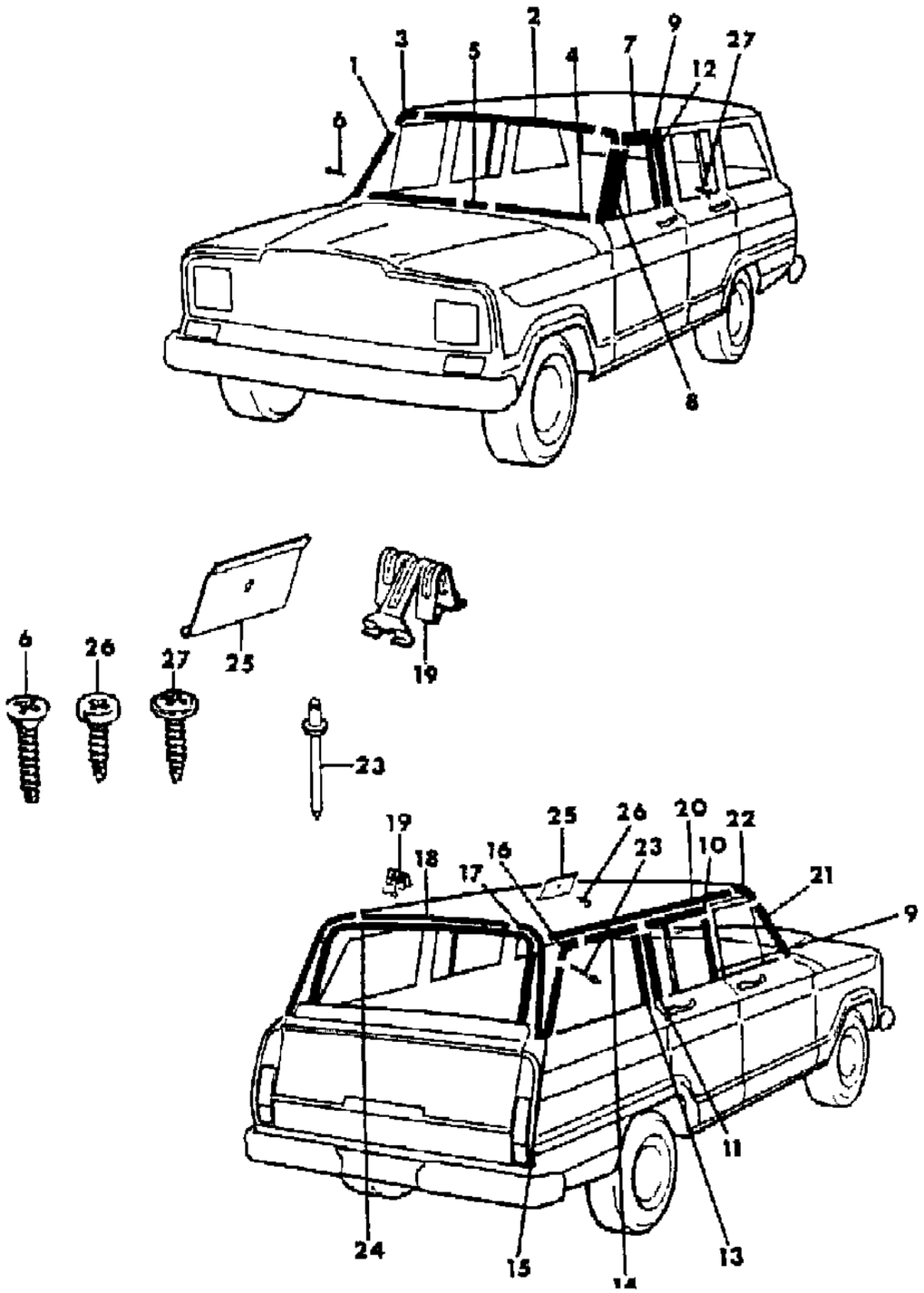

ITEM	PART NUMBER	QTY	BODY	MODEL	DESCRIPTION
1					MOULDING, Windshield
	J096 8348	1			Right
	J096 8347	1			Left
2	J096 0057	1			MOULDING, Windshield
3					CAP, Moulding
	J096 8350	1			Right
	J096 8349	1			Left
4					MOULDING, Windshield
	J096 1177	1			Right
	J096 1177	1			Left
5	J096 1240	1			CAP, Moulding
6	J400 6409	AR			SCREW
7					MOULDING, Door
	J575 3506	1			Right
	J575 8507	1			Left
8					MOULDING, Door
	J096 0658	1			Right
	J096 0657	1			Left
9					MOULDING, Door
	J096 0834	2			Right
	J096 0833	2			Left
10	J575 8508	2			MOULDING, Door
11					MOULDING, Door
	J096 0954	1			Right
	J096 0953	1			Left
12	J546 0017	2			MOULDING, "B" Pillar
13	J096 1025	2			MOULDING, Rear Quarter
14					MOULDING, Rear Quarter
	J096 0952	1			Right
	J096 0951	1			Left
15	J096 0873	2			MOULDING, Rear Quarter
16	J096 1032	2			CAP, Moulding
17					MOULDING, Rear Quarter
	J096 5620	1			Right
	J096 5619	1			Left
18	J096 5623	1			MOULDING, Roof
19	J400 4902	AR			CLIP
20					MOULDING, Drip
	J545 6898	2			Metal

MODEL CODES

16=Cherokee 2 Dr.(1981-83)
17=Cherokee 2 Dr.(1981-83)
73=Cherokee 2WD-2 Dr.(1984-86)
74=Cherokee 2WD-4 Dr.(1984-86)
18=Cherokee 4 Dr.(1981-83)
77=Cherokee 4WD-2 Dr.(1984-86)
78=Cherokee 4WD-4 Dr.(1984-86)
85=CJ-5 (1981-83)
86=CJ-6(1981)
87=CJ-7(1981-86)
88=CJ-8, Scrambler(1981-86)
64=Comanche 2WD-6 Ft. Box(1986)
66=Comanche 2WD-7 Ft. Box(1986)
63=Comanche 4WD-6 Ft. Box(1986)
65=Comanche 4WD-7 Ft. Box(1986)
15=Grand Wagoneer 4 Dr.(1984-86)
25=J-10 Truck 7 Ft. Box(1981-84)
26=J10 Truck 8 Ft. Box(1981-86)
27=J-20 Truck 8 Ft. Box(1981-86)
15=Wagoneer 4 Dr.(1981-83)
75=Wagoneer 4WD-4 Dr.(1984-86)

BODY
CJ=CJ-5, CJ-6, CJ-7, CJ-8, Scrambler(1981-86)
MJ=Comanche Pickup(1986)

STYLES
SJ=Wagoneer(1981-83), Grand Wagoneer(1984-86), Cherokee(1981-83), J-10, J-20(1981-86)
XJ=Wagoneer(1984-86), Cherokee(1984-86)

AR = Use as Required - = Non Illustrated Part P.A.R. = Paint as Required

« RETURN TO GROUP INDEX »

MOULDINGS, EXTERIOR, UPPER SJ WAGONEER
Figure 23-8700

81J68 8700

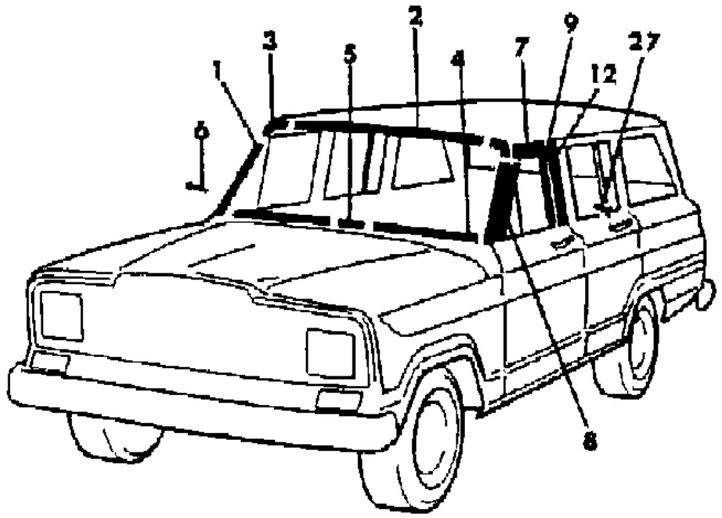

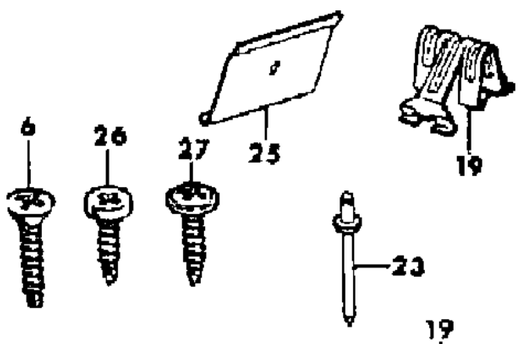

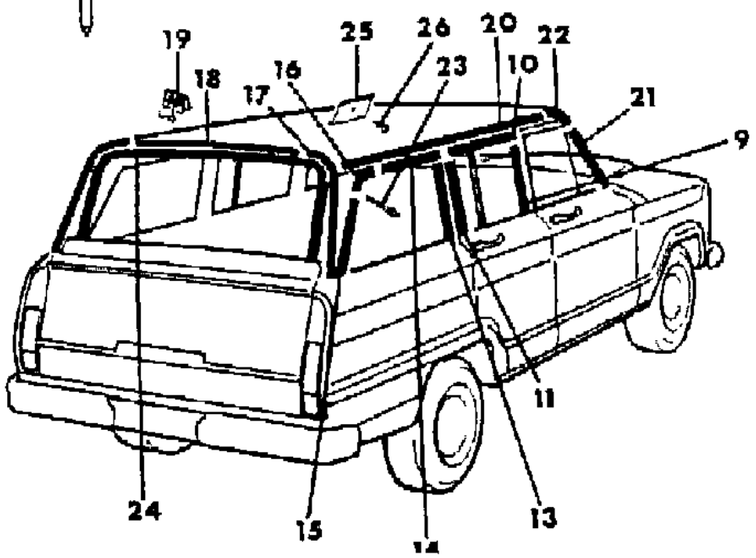

ITEM	PART NUMBER	QTY	BODY	MODEL	DESCRIPTION
	J576 0634	2			Plastic
21					MOULDING, Drip
	J097 1634	2			Metal
	J576 0635	2			Plastic
22					CAP, Moulding
	J097 1637	2			Metal
	J575 0560	2			Plastic
23	J400 4962	AR			RIVET
24	J575 4191	1			MOULDING, Rear Window
25	J096 0882	AR			TRACK, Moulding
26	J096 2022	10			SCREW
27	J400 5407	AR			SCREW

MODEL CODES
16=Cherokee 2 Dr.(1981-83)
17=Cherokee 2 Dr.(1981-83)
73=Cherokee 2WD-2 Dr.(1984-86)
74=Cherokee 2WD-4 Dr.(1984-86)
18=Cherokee 4 Dr.(1981-83)
77=Cherokee 4WD-2 Dr.(1984-86)
78=Cherokee 4WD-4 Dr.(1984-86)
85=CJ-5 (1981-83)
86=CJ-6(1981)
87=CJ-7(1981-86)
88=CJ-8, Scrambler(1981-86)
64=Comanche 2WD-6 Ft. Box(1986)
66=Comanche 2WD-7 Ft. Box(1986)
63=Comanche 4WD-6 Ft. Box(1986)
65=Comanche 4WD-7 Ft. Box(1986)
15=Grand Wagoneer 4 Dr.(1984-86)
25=J-10 Truck 7 Ft. Box(1981-84)
26=J10 Truck 8 Ft. Box(1981-86)
27=J-20 Truck 8 Ft. Box(1981-86)
15=Wagoneer 4 Dr.(1981-83)
75=Wagoneer 4WD-4 Dr.(1984-86)

BODY
CJ=CJ-5, CJ-6, CJ-7, CJ-8, Scrambler(1981-86)
MJ=Comanche Pickup(1986)

STYLES
SJ=Wagoneer(1981-83), Grand Wagoneer(1984-86), Cherokee(1981-83), J-10, J-20(1981-86)
XJ=Wagoneer(1984-86), Cherokee(1984-86)

AR = Use as Required - = Non Illustrated Part P.A.R. = Paint as Required

« RETURN TO GROUP INDEX

MOULDING, EXTERIOR, LOWER W/WOODGRAIN DECALS 1981-82, 1983 TYPE 1, 1983 TYPE 2, 1984-85, 1986 SJ WAGONEER
Figure 23-8800

81J68 8800

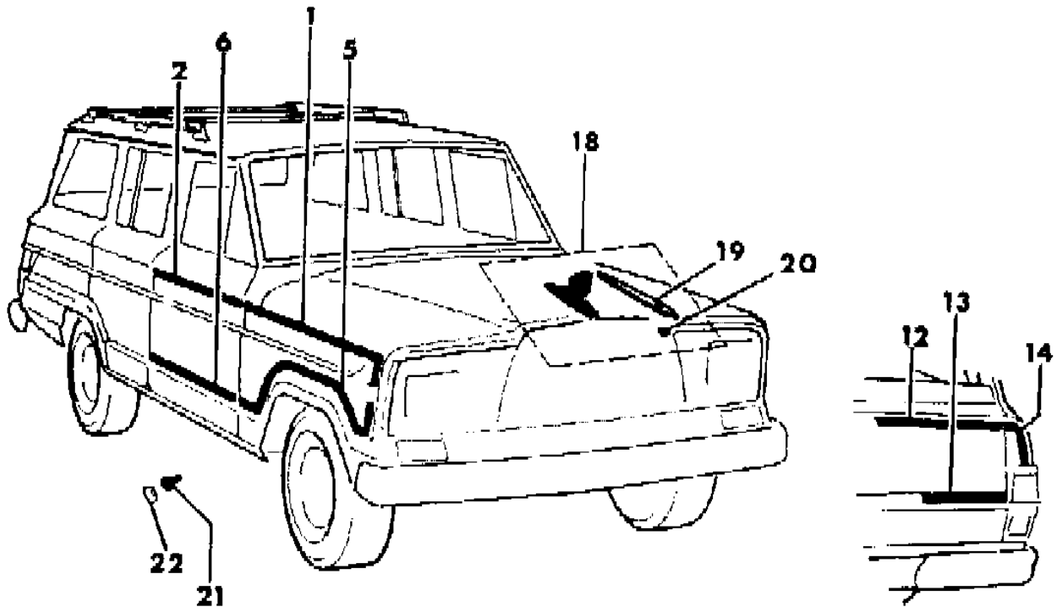

1981/1982, 1983 TYPE 1

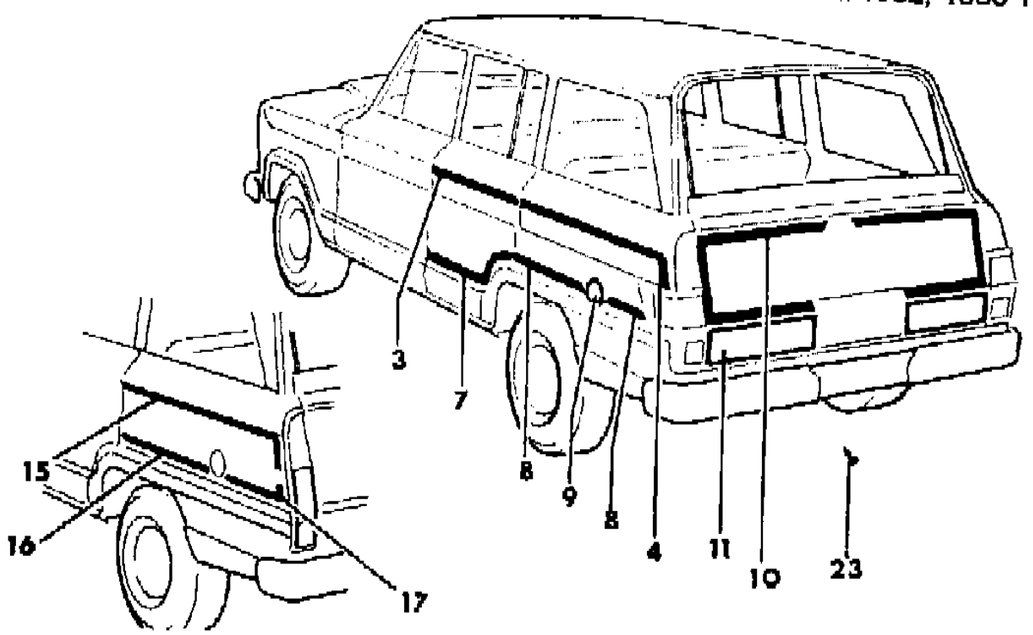

1983 TYPE 2,

1984/1985, 1986 TYPE 1

ITEM	PART NUMBER	QTY	BODY	MODEL	DESCRIPTION
1					MOULDING, Fender
	J575 5504-5	1			(a)
	J576 6458-9	1			(b)
2	J576 6458-9				MOULDING, Door, Modification Required
3	J576 6458	2			MOULDING, Door, Modification Required
4	J575 5514-5	1			MOULDING, Rear Quarter
5					MOULDING, Fender
	J575 5506-7	1			(a)
	J576 6460-1	1			(b)
6	J576 6459	2			MOULDING, Door, Modification Required
7	J575 5512-3	1			MOULDING, Door
8	J576 6458-9	1			MOULDING, Rear Quarter, Modificiation Required
9	J575 6634	1			MOULDING, Rear Quarter
10					MOULDING, Tailgate
	J576 0190-1	1			(a)
	J576 6634-5	1			(b)
11					MOULDING, Tailgate
	J575 4800	1			Right
	J575 4799	1			Left
12	J576 6458-9	1			MOULDING, Tailgate, Modificiation Required
13	J576 6458-9	1			MOULDING, Tailgate, Modification Required
14	J575 5520-1	1			MOULDING, Rear Quarter
15					MOULDING, Rear Quarter
	J576 3372-3	1			(a)
	J576 6462-3	1			(b)
16	J576 6459	1			MOULDING, Rear Quarter, Modification Required
17					MOULDING, Rear Quarter
	J576 3374-5	1			(a)
	J576 6464-5	1			(b)
18	8350 2503	1			ORNAMENT KIT, Hood ***
19	5501 0384	1			GASKET
20	J942 0287	2			NUT
21	J400 4962	AR			RIVET
22	J575 5503	AR			PLUG
23	J400 4812	AR			SCREW

(a) Moulding is used on 1984 vehicles until 1-30-84 VIN No. 1075058 (c) These Decals are used on 1983 vehicles after approximately 5-1-83

(b) Moulding is used on 1984 vehicles after 1-30-84 VIN No. 1075059 (c) These Decals are used on 1983 vehicles after approximately 5-1-83

MODEL CODES

16=Cherokee 2 Dr.(1981-83)
17=Cherokee 2 Dr.(1981-83)
73=Cherokee 2WD-2 Dr.(1984-86)
74=Cherokee 2WD-4 Dr.(1984-86)
18=Cherokee 4 Dr.(1981-83)
77=Cherokee 4WD-2 Dr.(1984-86)
78=Cherokee 4WD-4 Dr.(1984-86)
85=CJ-5 (1981-83)
86=CJ-6(1981)
87=CJ-7(1981-86)
88=CJ-8, Scrambler(1981-86)
64=Comanche 2WD-6 Ft. Box(1986)
66=Comanche 2WD-7 Ft. Box(1986)
63=Comanche 4WD-6 Ft. Box(1986)
65=Comanche 4WD-7 Ft. Box(1986)
15=Grand Wagoneer 4 Dr.(1984-86)
25=J-10 Truck 7 Ft. Box(1981-84)
26=J10 Truck 8 Ft. Box(1981-86)
27=J-20 Truck 8 Ft. Box(1981-86)
15=Wagoneer 4 Dr.(1981-83)
75=Wagoneer 4WD-4 Dr.(1984-86)

BODY
CJ=CJ-5, CJ-6, CJ-7, CJ-8, Scrambler(1981-86)
MJ=Comanche Pickup(1986)

STYLES
SJ=Wagoneer(1981-83), Grand Wagoneer(1984-86), Cherokee(1981-83), J-10, J-20(1981-86)
XJ=Wagoneer(1984-86), Cherokee(1984-86)

AR = Use as Required - = Non Illustrated Part P.A.R. = Paint as Required

« RETURN TO GROUP INDEX

MOULDINGS, EXTERIOR, LOWER WITH WOODGRAIN DECALS, 1986 TYPE 2 GRAND WAGONEER
Figure 23-8900

81J68 8900

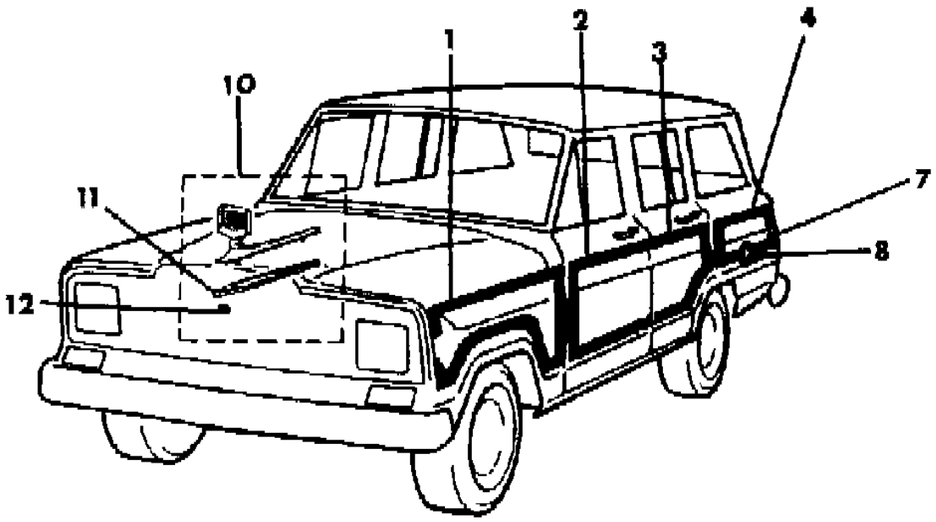

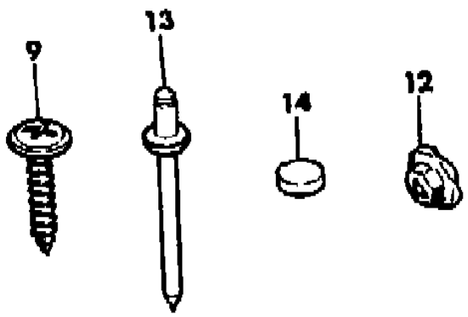

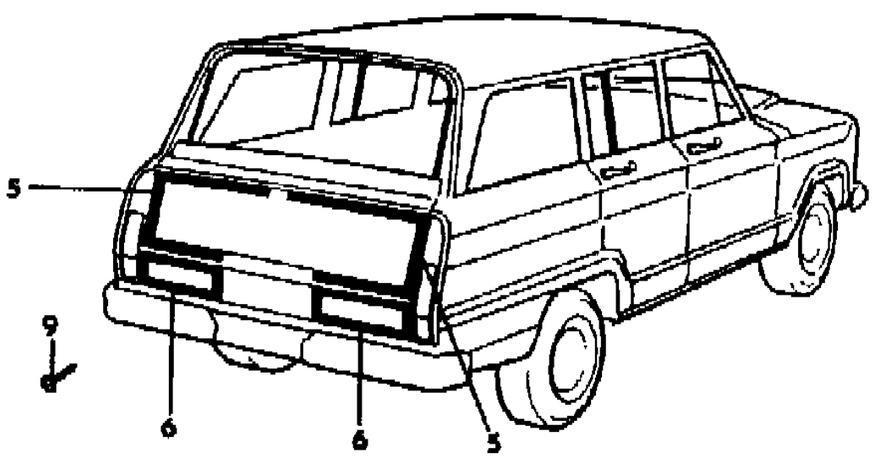

ITEM	PART NUMBER	QTY	BODY	MODEL	DESCRIPTION
1					MOULDING, Fender
	5505 2654	1			Right
	5505 2653	1			Left
2					MOULDING, Door
	5505 2656	1			Right
	5505 2655	1			Left
3					MOULDING, Door
	5505 2658	1			Right
	5505 2657	1			Left
4					MOULDING, Rear Quarter
	5505 2660	1			Right
	5505 2659	1			Left
5					MOULDING, Tailgate
	5505 2662	1			Right
	5505 2661	1			Left
6					OVERLAY
	J575 4800	1			Right
	J575 4799	1			Left
7	J576 6465	1			MOULDING, Rear Quarter, Left
8	J545 6634	1			RING, Trim
9	J400 4812	AR			SCREW
10	8350 2503	1			ORNAMENT KIT, Hood ***
11	5501 0384	1			GASKET
12	J942 0287	2			NUT
13	J400 4962	AR			RIVET
14	J575 5503	AR			PLUG

MODEL CODES

16=Cherokee 2 Dr.(1981-83)	78=Cherokee 4WD-4 Dr.(1984-86)	64=Comanche 2WD-6 Ft. Box(1986)	25=J-10 Truck 7 Ft. Box(1981-84)
17=Cherokee 2 Dr.(1981-83)	85=CJ-5 (1981-83)	66=Comanche 2WD-7 Ft. Box(1986)	26=J10 Truck 8 Ft. Box(1981-86)
73=Cherokee 2WD-2 Dr.(1984-86)	86=CJ-6(1981)	63=Comanche 4WD-6 Ft. Box(1986)	27=J-20 Truck 8 Ft. Box(1981-86)
74=Cherokee 2WD-4 Dr.(1984-86)	87=CJ-7(1981-86)	65=Comanche 4WD-7 Ft. Box(1986)	15=Wagoneer 4 Dr.(1981-83)
18=Cherokee 4 Dr.(1981-83)	88=CJ-8, Scrambler(1981-86)	15=Grand Wagoneer 4 Dr.(1984-86)	75=Wagoneer 4WD-4 Dr.(1984-86)
77=Cherokee 4WD-2 Dr.(1984-86)			

BODY
CJ=CJ-5, CJ-6, CJ-7, CJ-8, Scrambler(1981-86)
MJ=Comanche Pickup(1986)

STYLES
SJ=Wagoneer(1981-83), Grand Wagoneer(1984-86), Cherokee(1981-83), J-10, J-20(1981-86)
XJ=Wagoneer(1984-86), Cherokee(1984-86)

AR = Use as Required - = Non Illustrated Part P.A.R. = Paint as Required

« RETURN TO GROUP INDEX

MOULDINGS, EXTERIOR, LOWER WITH WOODGRAIN DECALS, 1981-82 WITHOUT LIMITED SJ WAGONEER
Figure 23-9000

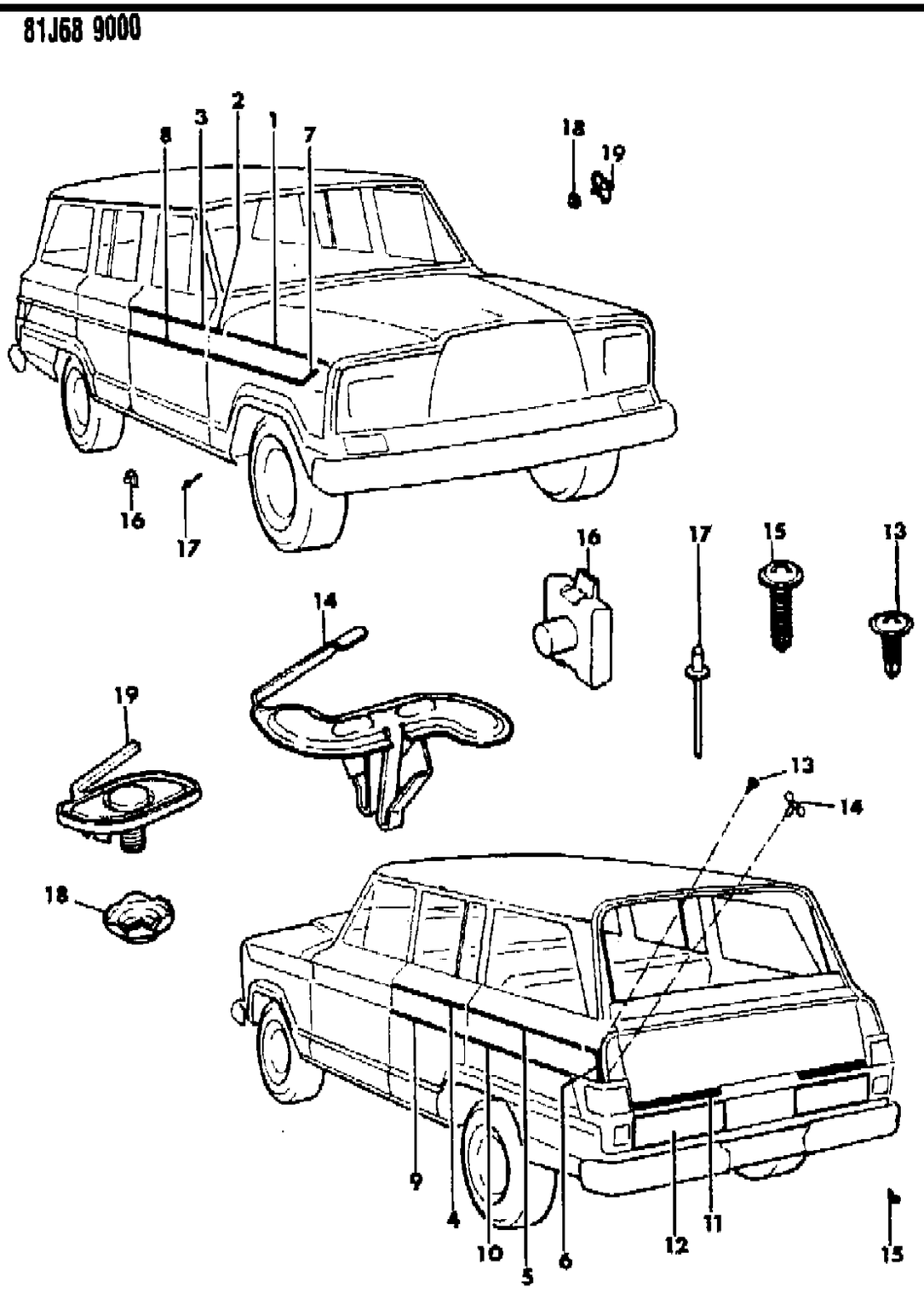

ITEM	PART NUMBER	QTY	BODY	MODEL	DESCRIPTION
1					MOULDING, Fender
	J097 1812	1			Right
	J097 1811	1			Left
2					MOULDING, Fender
	J545 9840	1			Right
	J545 9841	1			Left
3	J545 9817	2			MOULDING, Door
4					MOULDING, Door
	J546 2312	1			Right
	J546 2313	1			Left
5					MOULDING, Rear Quarter
	J545 9776	1			Right
	J545 9775	1			Left
6					MOULDING, Rear Quarter
	J545 9862	1			Right
	J545 9863	1			Left
7					MOULDING, Fender
	J546 2322	1			Right
	J546 2321	1			Left
8	J546 2314	2			MOULDING, Door
9					MOULDING, Door
	J546 2312	1			Right
	J546 2313	1			Left
10					MOULDING, Rear Quarter
	J546 2320	1			Right
	J546 2319	1			Left
11					MOULDING, Tailgate
	J575 4532	1			Right
	J575 4531	1			Left
12					OVERLAY
	J575 4800	1			Right
	J575 4799	1			Left
13	J400 1468	4			SCREW
14	J546 8986	4			CLIP
15	J400 4812	14			SCREW
16	J546 2734	AR			RETAINER
17	J400 4800	2			RIVET
18	S942 0866	4			NUT
19	J097 2768	4			FASTENER

MODEL CODES

16=Cherokee 2 Dr.(1981-83)
17=Cherokee 2 Dr.(1981-83)
73=Cherokee 2WD-2 Dr.(1984-86)
74=Cherokee 2WD-4 Dr.(1984-86)
18=Cherokee 4 Dr.(1981-83)
77=Cherokee 4WD-2 Dr.(1984-86)
78=Cherokee 4WD-4 Dr.(1984-86)
85=CJ-5 (1981-83)
86=CJ-6(1981)
87=CJ-7(1981-86)
88=CJ-8, Scrambler(1981-86)
64=Comanche 2WD-6 Ft. Box(1986)
66=Comanche 2WD-7 Ft. Box(1986)
63=Comanche 4WD-6 Ft. Box(1986)
65=Comanche 4WD-7 Ft. Box(1986)
15=Grand Wagoneer 4 Dr.(1984-86)
25=J-10 Truck 7 Ft. Box(1981-84)
26=J10 Truck 8 Ft. Box(1981-86)
27=J-20 Truck 8 Ft. Box(1981-86)
15=Wagoneer 4 Dr.(1981-83)
75=Wagoneer 4WD-4 Dr.(1984-86)

BODY
CJ=CJ-5, CJ-6, CJ-7, CJ-8, Scrambler(1981-86)
MJ=Comanche Pickup(1986)

STYLES
SJ=Wagoneer(1981-83), Grand Wagoneer(1984-86), Cherokee(1981-83), J-10, J-20(1981-86)
XJ=Wagoneer(1984-86), Cherokee(1984-86)

AR = Use as Required - = Non Illustrated Part P.A.R. = Paint as Required

« RETURN TO GROUP INDEX

MOULDINGS, EXTERIOR, LOWER LESS WOODGRAIN DECALS, LIMITED SJ WAGONEER
Figure 23-9100

81J68 9100

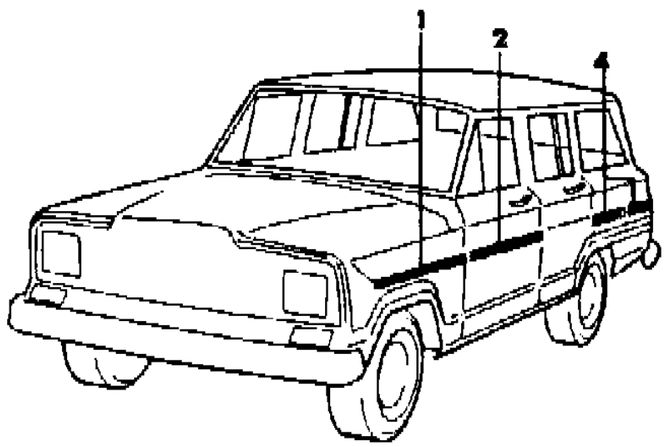

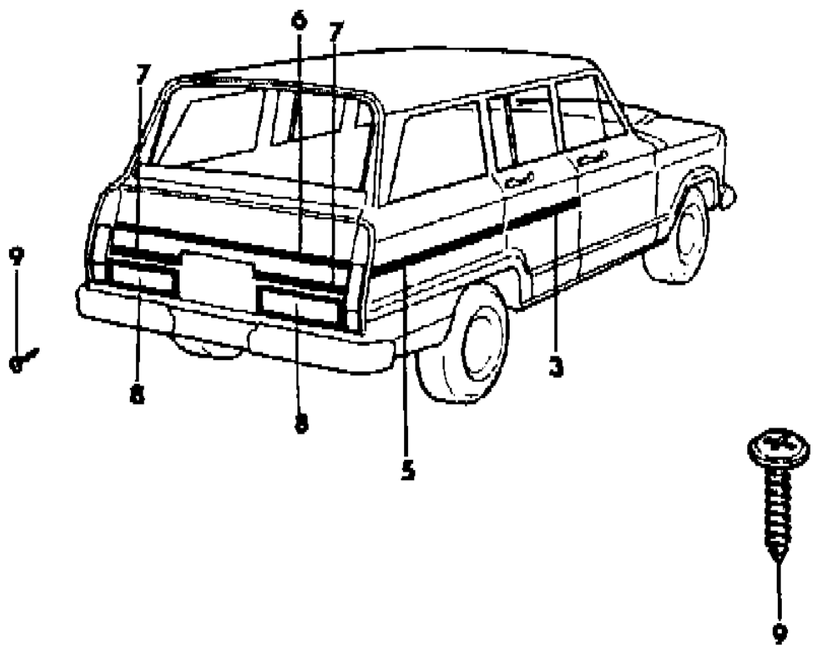

ITEM	PART NUMBER	QTY	BODY	MODEL	DESCRIPTION
1	J575 5397	2			MOULDING, Fender, Woodgrain, Modification Required
2	J575 5397	2			MOULDING, Door, Woodgrain, Modification Required
3	J575 5397	2			MOULDING, Door, Woodgrain, Modification Required
4-5	J575 5392-3	1			MOULDING, Rear Quarter, Woodgrain, Modification Required
6	J575 4531	1			MOULDING, Tailgate, Woodgrain, with Two Tone Paint
7					MOULDING, Tailgate
	J575 4532	1			Right
	J575 4531	1			Left
8					OVERLAY
	J575 4800	1			Right
	J575 4799	1			Left
9	J400 4812	AR			SCREW

MODEL CODES

16=Cherokee 2 Dr.(1981-83)	78=Cherokee 4WD-4 Dr.(1984-86)	64=Comanche 2WD-6 Ft. Box(1986)	25=J-10 Truck 7 Ft. Box(1981-84)
17=Cherokee 2 Dr.(1981-83)	85=CJ-5 (1981-83)	66=Comanche 2WD-7 Ft. Box(1986)	26=J10 Truck 8 Ft. Box(1981-86)
73=Cherokee 2WD-2 Dr.(1984-86)	86=CJ-6(1981)	63=Comanche 4WD-6 Ft. Box(1986)	27=J-20 Truck 8 Ft. Box(1981-86)
74=Cherokee 2WD-4 Dr.(1984-86)	87=CJ-7(1981-86)	65=Comanche 4WD-7 Ft. Box(1986)	15=Wagoneer 4 Dr.(1981-83)
18=Cherokee 4 Dr.(1981-83)	88=CJ-8, Scrambler(1981-86)	15=Grand Wagoneer 4 Dr.(1984-86)	75=Wagoneer 4WD-4 Dr.(1984-86)
77=Cherokee 4WD-2 Dr.(1984-86)			

BODY
CJ=CJ-5, CJ-6, CJ-7, CJ-8, Scrambler(1981-86)
MJ=Comanche Pickup(1986)

STYLES
SJ=Wagoneer(1981-83), Grand Wagoneer(1984-86), Cherokee(1981-83), J-10, J-20(1981-86)
XJ=Wagoneer(1984-86), Cherokee(1984-86)

AR = Use as Required - = Non Illustrated Part P.A.R. = Paint as Required

« RETURN TO GROUP INDEX

MOULDINGS, EXTERIOR, LOWER WITHOUT WOODGRAIN DECALS, WITHOUT LIMITED SJ WAGONEER
Figure 23-9200

81J68 9200

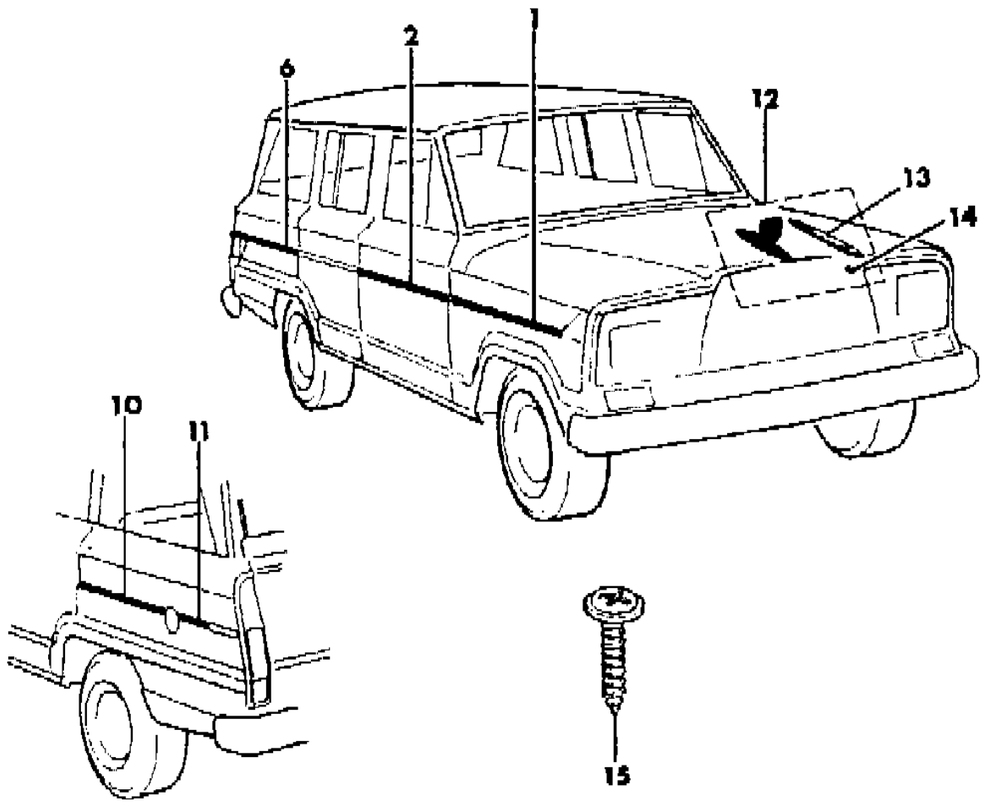

1984/ GRAND WAGONEER

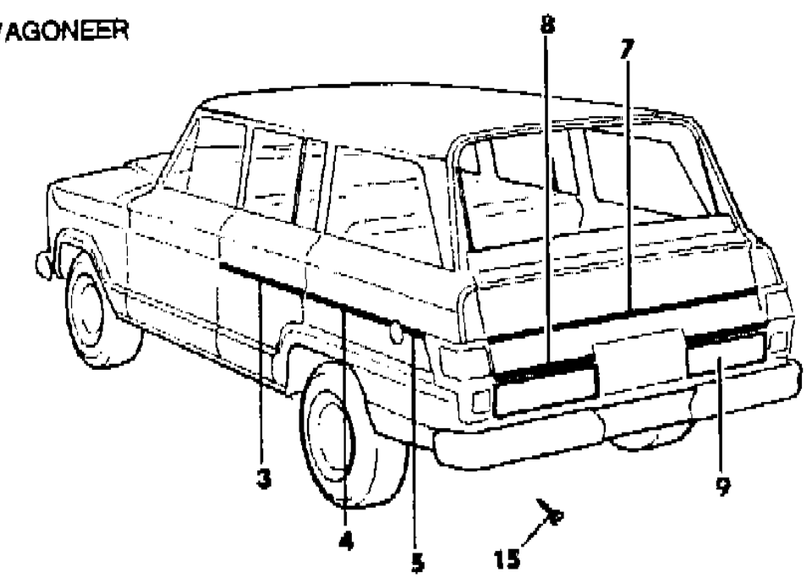

ITEM	PART NUMBER	QTY	BODY	MODEL	DESCRIPTION
1					MOULDING, Fender
	J576 4530	2			Silver, Modificiation Required
	J576 5208	1			Silver, Right, EXPORT, Economic Commission of Europe
	J576 5207	1			Silver, Left, EXPORT, Economic Commission of Europe
	J575 5397	2			Woodgrain, Modification Required
2					MOULDING, Door
	J576 4530	2			Silver, Modification of Europe
	J575 5397	2			Woodgrain, Modification Required
3					MOULDING, Door
	J576 4530	2			Silver, Modification Required
	J575 5397	2			Woodgrain, Modification Required ***
4					MOULDING, Rear Quarter
	J576 4530	1			Silver, Left, Modification Required
	J575 5393	1			Woodgrain, Left, Modification Required
5					MOULDING, Rear Quarter
	J576 4528	1			Silver, Left
6					MOULDING, Rear Quarter
	J576 3376	1			Silver, Right
	J575 5392	1			Woodgrain, Right
7					MOULDING, Tailgate
	J575 5397	1			Woodgrain, with Two Tone Paint
8					MOULDING, Tailgate
	J575 4532	1			Right
	J575 4531	1			Left
9					OVERLAY
	J575 4800	1			Right
	J575 4799	1			Left
10					MOULDING, Rear Quarter
	J576 4530	1			Silver, Left, Modification Required ***
11					MOULDING, Rear Quarter
	J576 3377	1			Silver, Left
12	8350 2503	1			ORNAMENT KIT, Hood ***
13	5501 0384	1			GASKET
14	J942 0287	2			NUT
15	J400 4812	AR			SCREW

MODEL CODES

16=Cherokee 2 Dr.(1981-83)	78=Cherokee 4WD-4 Dr.(1984-86)	64=Comanche 2WD-6 Ft. Box(1986)	25=J-10 Truck 7 Ft. Box(1981-84)
17=Cherokee 2 Dr.(1981-83)	85=CJ-5 (1981-83)	66=Comanche 2WD-7 Ft. Box(1986)	26=J10 Truck 8 Ft. Box(1981-86)
73=Cherokee 2WD-2 Dr.(1984-86)	86=CJ-6(1981)	63=Comanche 4WD-6 Ft. Box(1986)	27=J-20 Truck 8 Ft. Box(1981-86)
74=Cherokee 2WD-4 Dr.(1984-86)	87=CJ-7(1981-86)	65=Comanche 4WD-7 Ft. Box(1986)	15=Wagoneer 4 Dr.(1981-83)
18=Cherokee 4 Dr.(1981-83)	88=CJ-8, Scrambler(1981-86)	15=Grand Wagoneer 4 Dr.(1984-86)	75=Wagoneer 4WD-4 Dr.(1984-86)
77=Cherokee 4WD-2 Dr.(1984-86)			

BODY
CJ=CJ-5, CJ-6, CJ-7, CJ-8, Scrambler(1981-86)
MJ=Comanche Pickup(1986)

STYLES
SJ=Wagoneer(1981-83), Grand Wagoneer(1984-86), Cherokee(1981-83), J-10, J-20(1981-86)
XJ=Wagoneer(1984-86), Cherokee(1984-86)

AR = Use as Required - = Non Illustrated Part P.A.R. = Paint as Required

« RETURN TO GROUP INDEX

DECALS, EXTERIOR WOODGRAIN SJ WAGONEER
Figure 23-9300

81J68 9300

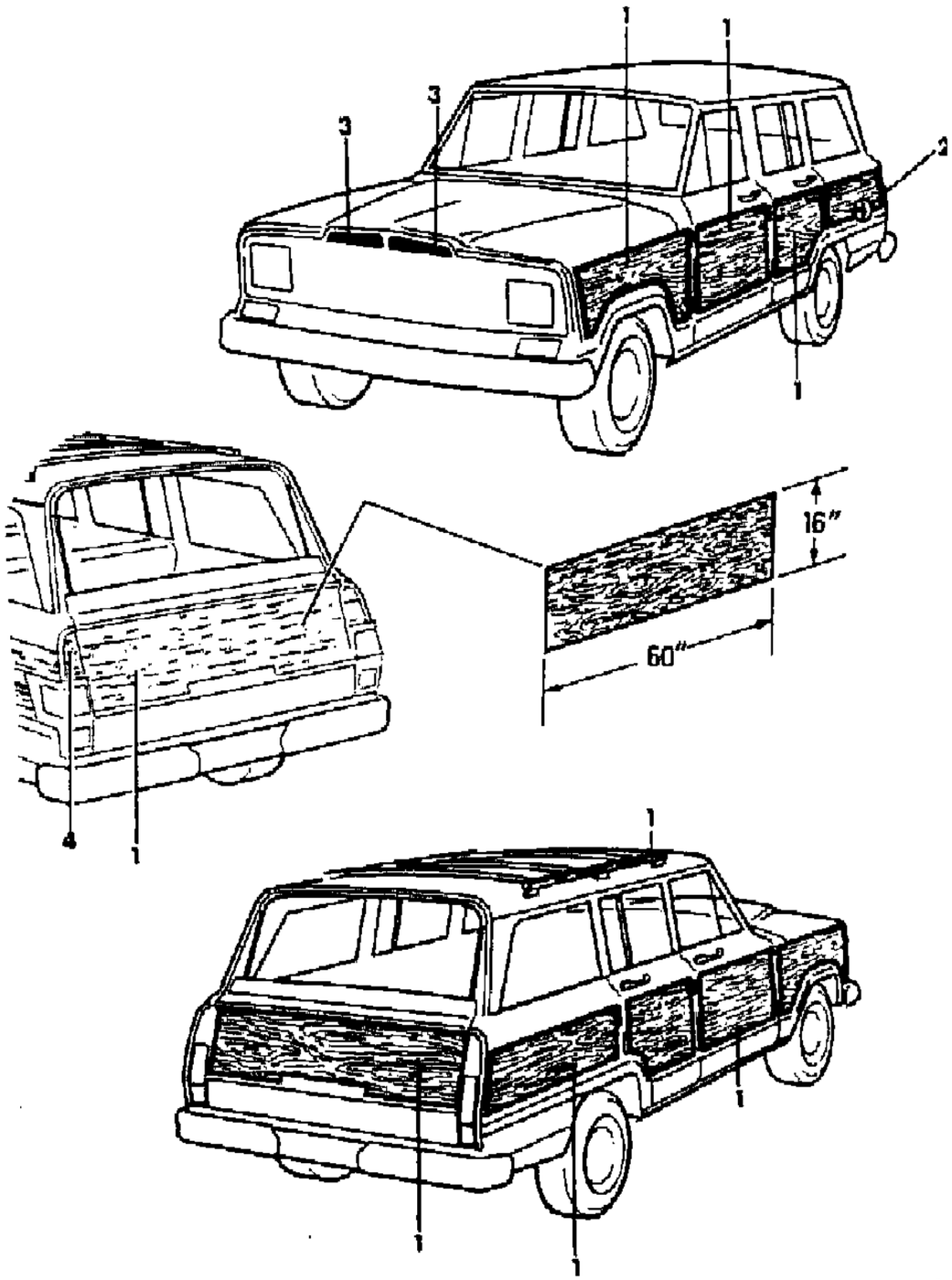

ITEM	PART NUMBER	QTY	BODY	MODEL	DESCRIPTION
1	J813 3349	1			DECAL, Woodgrain, Modification Required
2		1			RING, Retaining
	J536 3394	1			Unleaded Fuel
	J536 3395	1			Leaded Fuel
3	5501 2578-9	1			DECAL, Grille
4	J575 5534-5	1			DECAL, Woodgrain

MODEL CODES

16=Cherokee 2 Dr.(1981-83)
17=Cherokee 2 Dr.(1981-83)
73=Cherokee 2WD-2 Dr.(1984-86)
74=Cherokee 2WD-4 Dr.(1984-86)
18=Cherokee 4 Dr.(1981-83)
77=Cherokee 4WD-2 Dr.(1984-86)
78=Cherokee 4WD-4 Dr.(1984-86)
85=CJ-5 (1981-83)
86=CJ-6(1981)
87=CJ-7(1981-86)
88=CJ-8, Scrambler(1981-86)
64=Comanche 2WD-6 Ft. Box(1986)
66=Comanche 2WD-7 Ft. Box(1986)
63=Comanche 4WD-6 Ft. Box(1986)
65=Comanche 4WD-7 Ft. Box(1986)
15=Grand Wagoneer 4 Dr.(1984-86)
25=J-10 Truck 7 Ft. Box(1981-84)
26=J10 Truck 8 Ft. Box(1981-86)
27=J-20 Truck 8 Ft. Box(1981-86)
15=Wagoneer 4 Dr.(1981-83)
75=Wagoneer 4WD-4 Dr.(1984-86)

BODY
CJ=CJ-5, CJ-6, CJ-7, CJ-8, Scrambler(1981-86)
MJ=Comanche Pickup(1986)

STYLES
SJ=Wagoneer(1981-83), Grand Wagoneer(1984-86), Cherokee(1981-83), J-10, J-20(1981-86)
XJ=Wagoneer(1984-86), Cherokee(1984-86)

AR = Use as Required - = Non Illustrated Part P.A.R. = Paint as Required

« RETURN TO GROUP INDEX

DECALS, EXTERIOR WOODGRAIN, 1981-82 WITHOUT LIMITED SJ WAGONEER
Figure 23-9400

81J68 9400

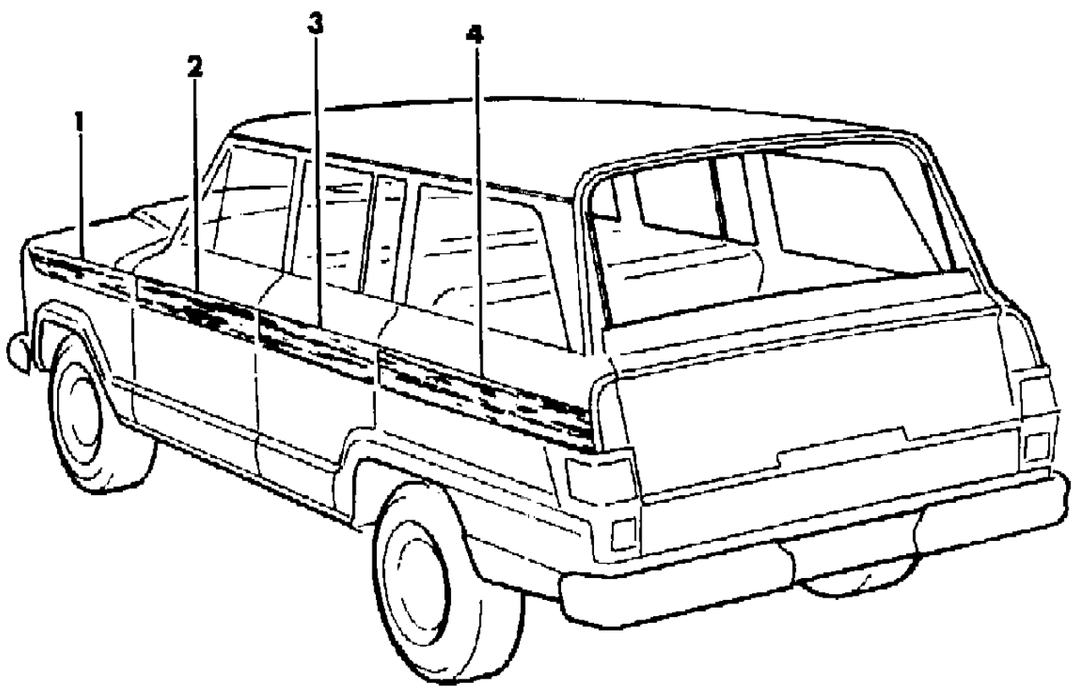

ITEM	PART NUMBER	QTY	BODY	MODEL	DESCRIPTION
1	J575 5538-9	1			DECAL, Woodgrain
2	J575 5540-1	1			DECAL, Woodgrain
3	J575 5542-3	1			DECAL, Woodgrain
4	J575 5544-5	1			DECAL, Woodgrain

MODEL CODES
16=Cherokee 2 Dr.(1981-83)
17=Cherokee 2 Dr.(1981-83)
73=Cherokee 2WD-2 Dr.(1984-86)
74=Cherokee 2WD-4 Dr.(1984-86)
18=Cherokee 4 Dr.(1981-83)
77=Cherokee 4WD-2 Dr.(1984-86)
78=Cherokee 4WD-4 Dr.(1984-86)
85=CJ-5 (1981-83)
86=CJ-6(1981)
87=CJ-7(1981-86)
88=CJ-8, Scrambler(1981-86)
64=Comanche 2WD-6 Ft. Box(1986)
66=Comanche 2WD-7 Ft. Box(1986)
63=Comanche 4WD-6 Ft. Box(1986)
65=Comanche 4WD-7 Ft. Box(1986)
15=Grand Wagoneer 4 Dr.(1984-86)
25=J-10 Truck 7 Ft. Box(1981-84)
26=J10 Truck 8 Ft. Box(1981-86)
27=J-20 Truck 8 Ft. Box(1981-86)
15=Wagoneer 4 Dr.(1981-83)
75=Wagoneer 4WD-4 Dr.(1984-86)

BODY
CJ=CJ-5, CJ-6, CJ-7, CJ-8, Scrambler(1981-86)
MJ=Comanche Pickup(1986)

STYLES
SJ=Wagoneer(1981-83), Grand Wagoneer(1984-86), Cherokee(1981-83), J-10, J-20(1981-86)
XJ=Wagoneer(1984-86), Cherokee(1984-86)

AR = Use as Required - = Non Illustrated Part P.A.R. = Paint as Required

« RETURN TO GROUP INDEX

NAMEPLATES TOWNSIDE J10, J20
Figure 23-9500

81J68 9500

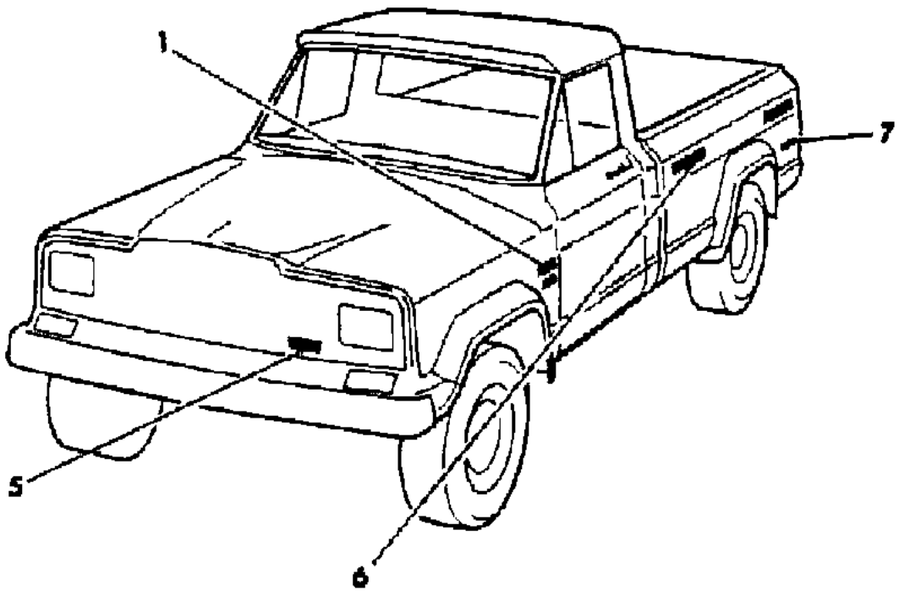

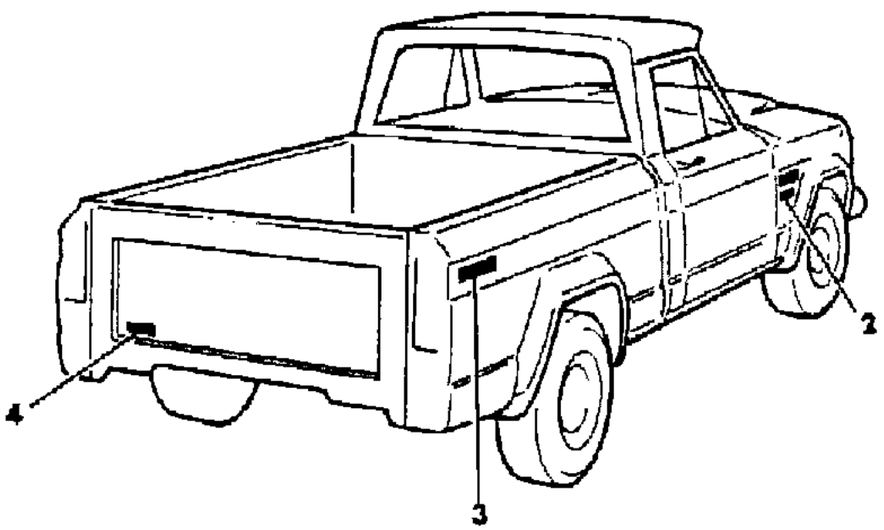

ITEM	PART NUMBER	QTY	BODY	MODEL	DESCRIPTION
1					NAMEPLATE
	J545 2020	2			J10
	J545 2021	2			J20
	J545 1635	2			4 Wheel Drive
2					NAMEPLATE
	5501 0898	2			Pioneer
3					NAMEPLATE
	5500 7817	2			4x4
4					NAMEPLATE
	5501 3578	1			V-8
	J545 1985	2			Jeep
	J545 0348	1			AMC
5					NAMEPLATE
	J545 1627	1			Jeep
6					NAMEPLATE
	J575 0834	2			Laredo
7					NAMEPLATE
	J545 1628	2			Quadra-Trac
	J576 3574	2			Selec-Trac

MODEL CODES

16=Cherokee 2 Dr.(1981-83)
17=Cherokee 2 Dr.(1981-83)
73=Cherokee 2WD-2 Dr.(1984-86)
74=Cherokee 2WD-4 Dr.(1984-86)
18=Cherokee 4 Dr.(1981-83)
77=Cherokee 4WD-2 Dr.(1984-86)
78=Cherokee 4WD-4 Dr.(1984-86)
85=CJ-5 (1981-83)
86=CJ-6(1981)
87=CJ-7(1981-86)
88=CJ-8, Scrambler(1981-86)
64=Comanche 2WD-6 Ft. Box(1986)
66=Comanche 2WD-7 Ft. Box(1986)
63=Comanche 4WD-6 Ft. Box(1986)
65=Comanche 4WD-7 Ft. Box(1986)
15=Grand Wagoneer 4 Dr.(1984-86)
25=J-10 Truck 7 Ft. Box(1981-84)
26=J10 Truck 8 Ft. Box(1981-86)
27=J-20 Truck 8 Ft. Box(1981-86)
15=Wagoneer 4 Dr.(1981-83)
75=Wagoneer 4WD-4 Dr.(1984-86)

BODY
CJ=CJ-5, CJ-6, CJ-7, CJ-8, Scrambler(1981-86)
MJ=Comanche Pickup(1986)

STYLES
SJ=Wagoneer(1981-83), Grand Wagoneer(1984-86), Cherokee(1981-83), J-10, J-20(1981-86)
XJ=Wagoneer(1984-86), Cherokee(1984-86)

AR = Use as Required - = Non Illustrated Part P.A.R. = Paint as Required

« RETURN TO GROUP INDEX

MOULDINGS, EXTERIOR, UPPER J10, J20
Figure 23-9600

81J68 9600

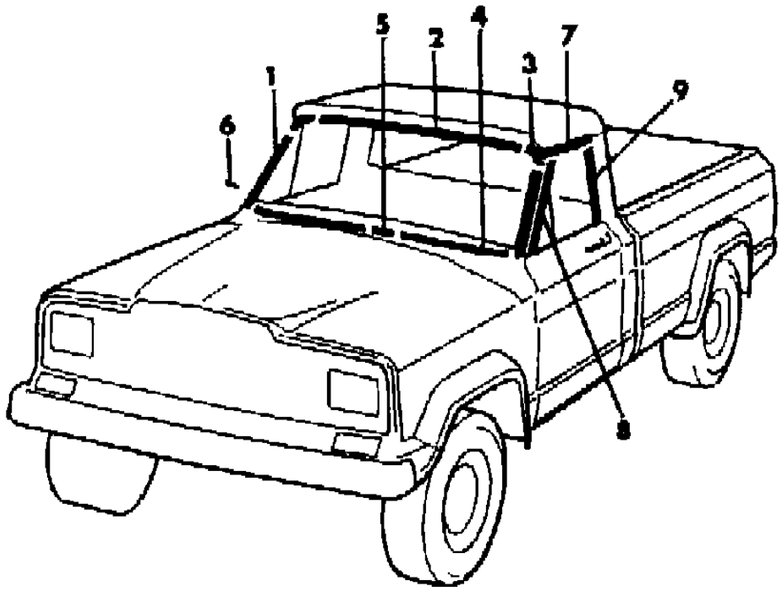

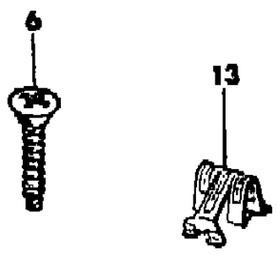

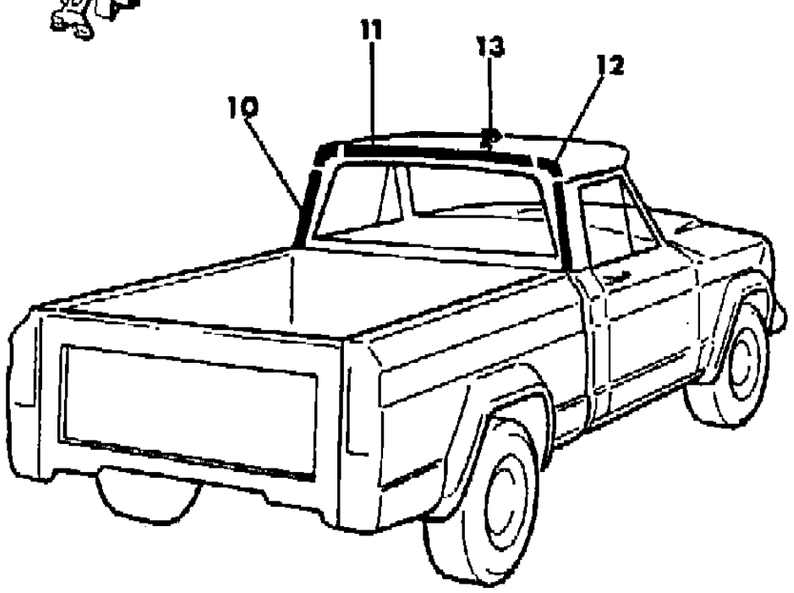

ITEM	PART NUMBER	QTY	BODY	MODEL	DESCRIPTION
1					MOULDING, Windshield
	J096 8348	1			Right
	J096 8347	1			Left
2	J096 0057	1			MOULDING, Windshield
3					MOULDING, Cap
	J096 8350	1			Right
	J096 8349	1			Left
4					MOULDING, Windshield
	J096 1178	1			Right
	J096 1177	1			Left
5	J096 1240	1			CAP, Moulding
6	J400 6409	AR			SCREW
7					MOULDING, Door
	J575 8506	1			Right
	J575 8507	1			Left
8					MOULDING, Door
	J096 0658	1			Right
	J096 0657	1			Left
9					MOULDING, Door
	J096 0834	1			Right
	J096 0833	1			Left
10					MOULDING, Cab Rear Quarter
	J095 7808	1			Right
	J095 7807	1			Left
11	J095 7811	1			MOULDING, Roof
12	J096 1930	2			CAP, Moulding
13	J400 4902	AR			CLIP

MODEL CODES

16=Cherokee 2 Dr.(1981-83)
17=Cherokee 2 Dr.(1981-83)
73=Cherokee 2WD-2 Dr.(1984-86)
74=Cherokee 2WD-4 Dr.(1984-86)
18=Cherokee 4 Dr.(1981-83)
77=Cherokee 4WD-2 Dr.(1984-86)
78=Cherokee 4WD-4 Dr.(1984-86)
85=CJ-5 (1981-83)
86=CJ-6(1981)
87=CJ-7(1981-86)
88=CJ-8, Scrambler(1981-86)
64=Comanche 2WD-6 Ft. Box(1986)
66=Comanche 2WD-7 Ft. Box(1986)
63=Comanche 4WD-6 Ft. Box(1986)
65=Comanche 4WD-7 Ft. Box(1986)
15=Grand Wagoneer 4 Dr.(1984-86)
25=J-10 Truck 7 Ft. Box(1981-84)
26=J10 Truck 8 Ft. Box(1981-86)
27=J-20 Truck 8 Ft. Box(1981-86)
15=Wagoneer 4 Dr.(1981-83)
75=Wagoneer 4WD-4 Dr.(1984-86)

BODY
CJ=CJ-5, CJ-6, CJ-7, CJ-8, Scrambler(1981-86)
MJ=Comanche Pickup(1986)

STYLES
SJ=Wagoneer(1981-83), Grand Wagoneer(1984-86), Cherokee(1981-83), J-10, J-20(1981-86)
XJ=Wagoneer(1984-86), Cherokee(1984-86)

AR = Use as Required - = Non Illustrated Part P.A.R. = Paint as Required

« RETURN TO GROUP INDEX

MOULDINGS, EXTERIOR, LOWER TOWNSIDE J10, J20
Figure 23-9700

81J68 9700

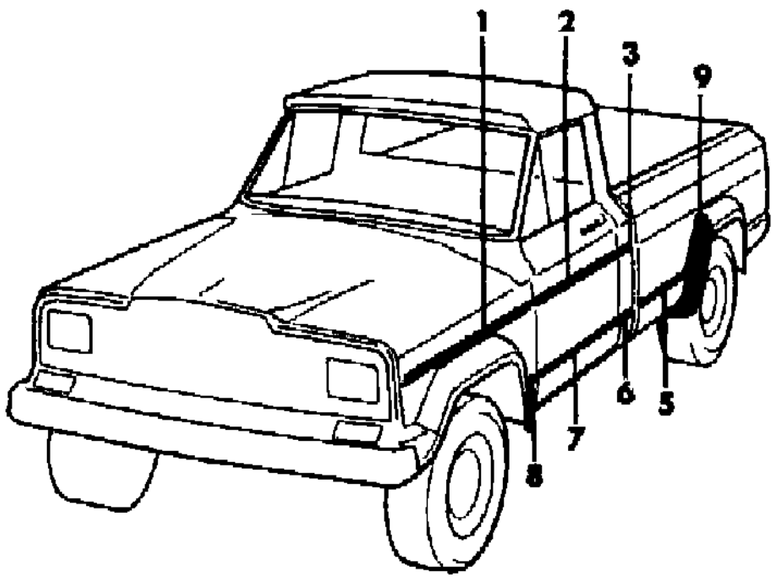

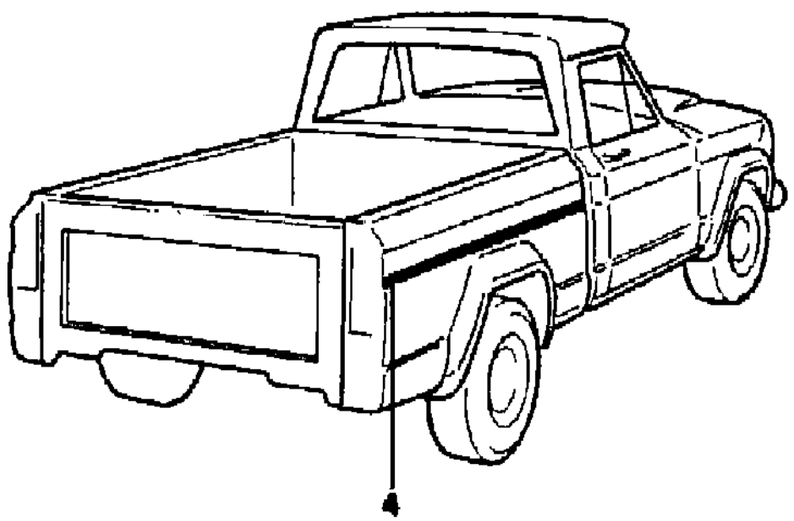

ITEM	PART NUMBER	QTY	BODY	MODEL	DESCRIPTION
1					MOULDING, Fender
	J575 3796	1			Right (a)
	8350 2094	1			Right (b)
	J575 3795	1			Left (a)
	8350 2095	1			Left (b)
2					MOULDING, Door
	J575 3800	2			(MR) (a)
	8350 2093	2			(MR) (b)
3					MOULDING, Cab Rear Quarter
	J575 3800	1			(MR)(a)
	8350 2093	1			(MR)(b)
4					MOULDING, Cargo Box
	J575 3800	2			(MR)(a)
	8350 2093	2			(MR)(b)
5	J575 3805	2			MOULDING, Fender (MR)
6	J575 3802	2			MOULDING, Door (MR)
7	J575 3805	2			MOULDING, Cab Rear Quarter (MR)
8	J575 3805	2			MOULDING, Cargo Box (MR)
9	J575 3814-5	1			PROTECTOR, Clear

(a) Moulding is 1/2" thick (c) These Decals are used on 1983 vehicles after approximately 5-1-83
(b) Moulding is 1/4" thick (c) These Decals are used on 1983 vehicles after approximately 5-1-83
(MR) Modification required for this application (c) These Decals are used on 1983 vehicles after approximately 5-1-83

MODEL CODES
16=Cherokee 2 Dr.(1981-83)
17=Cherokee 2 Dr.(1981-83)
73=Cherokee 2WD-2 Dr.(1984-86)
74=Cherokee 2WD-4 Dr.(1984-86)
18=Cherokee 4 Dr.(1981-83)
77=Cherokee 4WD-2 Dr.(1984-86)
78=Cherokee 4WD-4 Dr.(1984-86)
85=CJ-5 (1981-83)
86=CJ-6(1981)
87=CJ-7(1981-86)
88=CJ-8, Scrambler(1981-86)
64=Comanche 2WD-6 Ft. Box(1986)
66=Comanche 2WD-7 Ft. Box(1986)
63=Comanche 4WD-6 Ft. Box(1986)
65=Comanche 4WD-7 Ft. Box(1986)
15=Grand Wagoneer 4 Dr.(1984-86)
25=J-10 Truck 7 Ft. Box(1981-84)
26=J10 Truck 8 Ft. Box(1981-86)
27=J-20 Truck 8 Ft. Box(1981-86)
15=Wagoneer 4 Dr.(1981-83)
75=Wagoneer 4WD-4 Dr.(1984-86)

BODY
CJ=CJ-5, CJ-6, CJ-7, CJ-8, Scrambler(1981-86)
MJ=Comanche Pickup(1986)

STYLES
SJ=Wagoneer(1981-83), Grand Wagoneer(1984-86), Cherokee(1981-83), J-10, J-20(1981-86)
XJ=Wagoneer(1984-86), Cherokee(1984-86)

AR = Use as Required - = Non Illustrated Part P.A.R. = Paint as Required

« RETURN TO GROUP INDEX

DECALS, EXTERIOR TOWNSIDE J10, J20
Figure 23-9800

81J68 9800

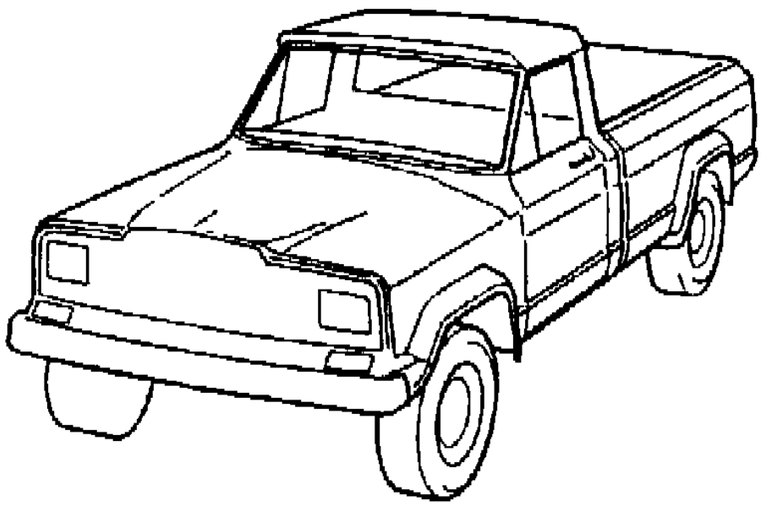

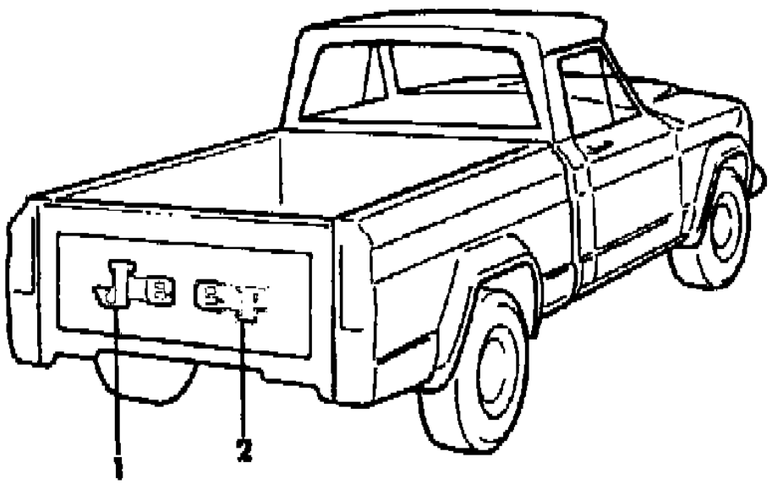

ITEM	PART NUMBER	QTY	BODY	MODEL	DESCRIPTION
1					DECAL, Tailgate
	5500 8824	1			Black
	5500 8825	1			White
2					DECAL, Tailgate
	5500 8826	1			Black
	5500 8827	1			White

MODEL CODES
16=Cherokee 2 Dr.(1981-83)
17=Cherokee 2 Dr.(1981-83)
73=Cherokee 2WD-2 Dr.(1984-86)
74=Cherokee 2WD-4 Dr.(1984-86)
18=Cherokee 4 Dr.(1981-83)
77=Cherokee 4WD-2 Dr.(1984-86)
78=Cherokee 4WD-4 Dr.(1984-86)
85=CJ-5 (1981-83)
86=CJ-6(1981)
87=CJ-7(1981-86)
88=CJ-8, Scrambler(1981-86)
64=Comanche 2WD-6 Ft. Box(1986)
66=Comanche 2WD-7 Ft. Box(1986)
63=Comanche 4WD-6 Ft. Box(1986)
65=Comanche 4WD-7 Ft. Box(1986)
15=Grand Wagoneer 4 Dr.(1984-86)
25=J-10 Truck 7 Ft. Box(1981-84)
26=J10 Truck 8 Ft. Box(1981-86)
27=J-20 Truck 8 Ft. Box(1981-86)
15=Wagoneer 4 Dr.(1981-83)
75=Wagoneer 4WD-4 Dr.(1984-86)

BODY
CJ=CJ-5, CJ-6, CJ-7, CJ-8, Scrambler(1981-86)
MJ=Comanche Pickup(1986)

STYLES
SJ=Wagoneer(1981-83), Grand Wagoneer(1984-86), Cherokee(1981-83), J-10, J-20(1981-86)
XJ=Wagoneer(1984-86), Cherokee(1984-86)

AR = Use as Required - = Non Illustrated Part P.A.R. = Paint as Required

« RETURN TO GROUP INDEX

DECALS, EXTERIOR PIONEER J10, J20
Figure 23-9900

81J68 9900

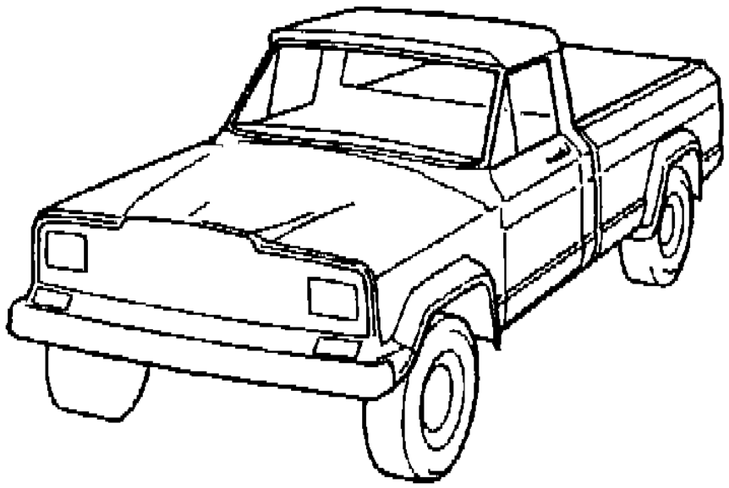

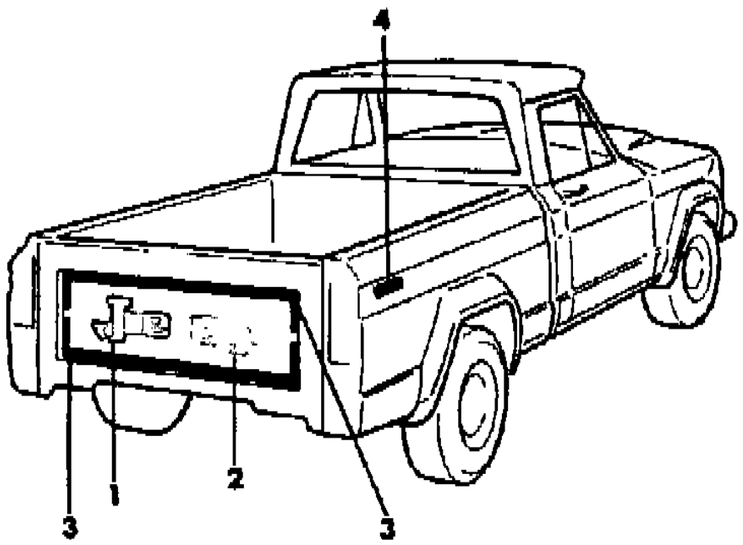

ITEM	PART NUMBER	QTY	BODY	MODEL	DESCRIPTION
1					DECAL, Tailgate
	J575 5863	1			Blues (a)(e)
	J575 5864	1			Coppers (a)(e)
	J575 5862	1			Reds (a)(e)
	J576 5166	1			Dark Blue/Light Blue (b)(f)
	J576 5167	1			Dark Orange/Light Orange (b)(f)
	J576 5168	1			Copper/Yellow (c)(f)
	5501 3152	1			Yellow/Copper (d)
2					DECAL, Tailgate
	J575 5866	1			Blues (a)(e)
	J575 5867	1			Coppers (a)(e)
	J575 5865	1			Reds (a)(e)
	J576 5169	1			Dark Blue/Light Blue (b)(f)
	J576 5170	1			Dark Orange/Light Orange (b)(f)
	J576 5171	1			Copper/Yellow (c)(f)
	5501 3153	1			Yellow/Copper (d)
3					DECAL, Tailgate
	J575 5857	2			Blues (a)(e)
	J575 5858	2			Coppers (a)(e)
	J575 5856	2			Reds (a)(e)
	J576 5163	2			Dark Blue/Light Blue (b)(f)
	J576 5164	2			Dark Orange/Light Orange (b)(f)
	J576 5165	2			Copper/Yellow (c)(f)
	5501 3151	2			Yellow/Copper (d)
4					DECAL, Cargo Box Side
	J575 8989	2			Blues (a)
	J575 8990	2			Coppers (a)
	J575 8988	2			Reds (a)(e)
	J576 5172	2			Dark Blue (b)
	J576 5173	2			Dark Orange (b)(f)
	5501 3150	2			Dark Yellow (d)

(a) 1981-84 (c) These Decals are used on 1983 vehicles after approximately 5-1-83
(b) 1984-85 (c) These Decals are used on 1983 vehicles after approximately 5-1-83
(c) 1984 (c) These Decals are used on 1983 vehicles after approximately 5-1-83
(d) 1986 (c) These Decals are used on 1983 vehicles after approximately 5-1-83
(e) Used on 1984 vehicles up to VIN No. 039650 (c) These Decals are used on 1983 vehicles after approximately 5-1-83
(f) Used on 1984 vehicles begining with VIN No. 039651 (c) These Decals are used on 1983 vehicles after approximately 5-1-83

MODEL CODES

16=Cherokee 2 Dr.(1981-83)	78=Cherokee 4WD-4 Dr.(1984-86)	64=Comanche 2WD-6 Ft. Box(1986)	25=J-10 Truck 7 Ft. Box(1981-84)
17=Cherokee 2 Dr.(1981-83)	85=CJ-5 (1981-83)	66=Comanche 2WD-7 Ft. Box(1986)	26=J10 Truck 8 Ft. Box(1981-86)
73=Cherokee 2WD-2 Dr.(1984-86)	86=CJ-6(1981)	63=Comanche 4WD-6 Ft. Box(1986)	27=J-20 Truck 8 Ft. Box(1981-86)
74=Cherokee 2WD-4 Dr.(1984-86)	87=CJ-7(1981-86)	65=Comanche 4WD-7 Ft. Box(1986)	15=Wagoneer 4 Dr.(1981-83)
18=Cherokee 4 Dr.(1981-83)	88=CJ-8, Scrambler(1981-86)	15=Grand Wagoneer 4 Dr.(1984-86)	75=Wagoneer 4WD-4 Dr.(1984-86)
77=Cherokee 4WD-2 Dr.(1984-86)			

BODY
CJ=CJ-5, CJ-6, CJ-7, CJ-8, Scrambler(1981-86)
MJ=Comanche Pickup(1986)

STYLES
SJ=Wagoneer(1981-83), Grand Wagoneer(1984-86), Cherokee(1981-83), J-10, J-20(1981-86)
XJ=Wagoneer(1984-86), Cherokee(1984-86)

AR = Use as Required - = Non Illustrated Part P.A.R. = Paint as Required

« RETURN TO GROUP INDEX

DECALS, EXTERIOR HONCHO, 1981-82 J10, J20
Figure 23-1000

81J68 10000

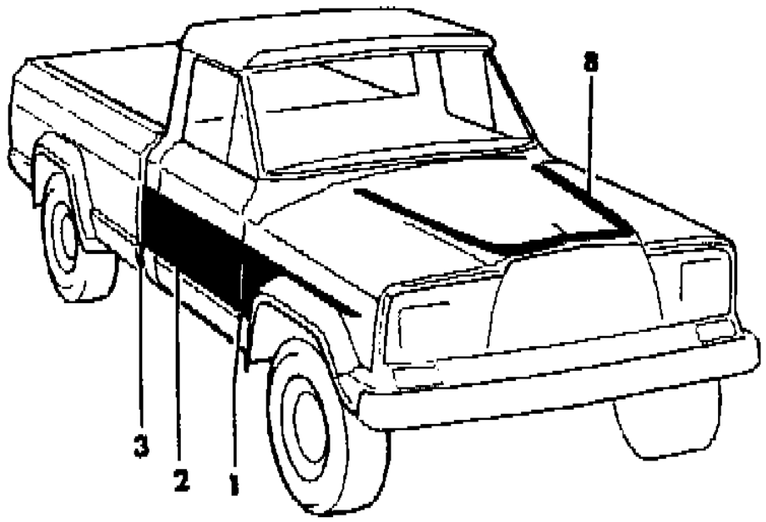

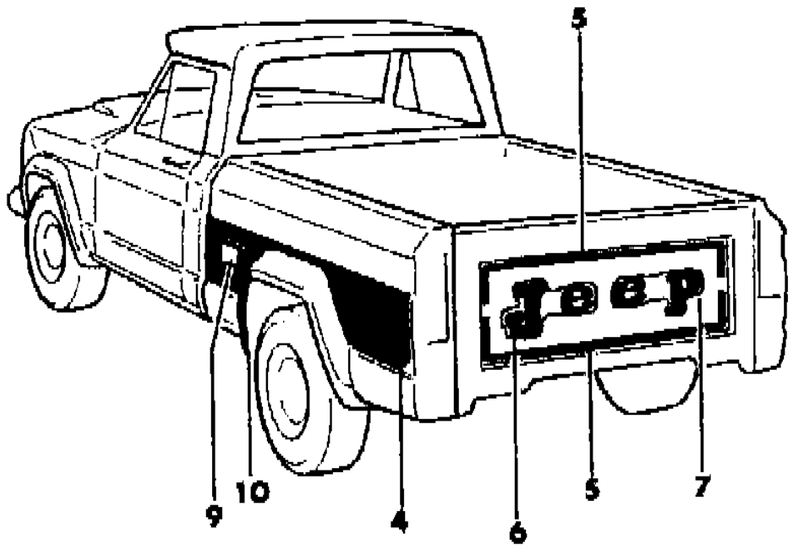

ITEM	PART NUMBER	QTY	BODY	MODEL	DESCRIPTION
1					DECAL, Fender
	J575 5834-5	1			Blues
	J575 5836-7	1			Coppers
	J575 5832-3	1			Reds
2					DECAL, Door
	J575 5840-1	1			Blues
	J575 5842-3	1			Coppers
	J575 5838-9	1			Reds
3					DECAL, Cab Rear Quarter
	J575 5846-7	1			Blues
	J575 5848-9	1			Coppers
	J575 5844-5	1			Reds
4					DECAL, Cargo Box Side
	J575 5852-3	1			Blues
	J575 5854-5	1			Coppers
	J575 5850-1	1			Reds
5					DECAL, Tailgate
	J575 5857	2			Blues
	J575 5858	2			Coppers
	J575 5856	2			Reds
6					DECAL, Tailgate
	J575 5863	1			Blues
	J575 5864	1			Coppers
	J575 5862	1			Reds
7					DECAL, Tailgate
	J575 5866	1			Blues
	J575 5867	1			Coppers
	J575 5865	1			Reds
8					DECAL, Hood
	J575 5829	1			Blues
	J575 5830	1			Coppers
	J575 5828	1			Reds
9	J545 6634	1			RING, Left
10	J575 3814-5	1			PROTECTOR, Clear

MODEL CODES

16=Cherokee 2 Dr.(1981-83)
17=Cherokee 2 Dr.(1981-83)
73=Cherokee 2WD-2 Dr.(1984-86)
74=Cherokee 2WD-4 Dr.(1984-86)
18=Cherokee 4 Dr.(1981-83)
77=Cherokee 4WD-2 Dr.(1984-86)
78=Cherokee 4WD-4 Dr.(1984-86)
85=CJ-5 (1981-83)
86=CJ-6(1981)
87=CJ-7(1981-86)
88=CJ-8, Scrambler(1981-86)
64=Comanche 2WD-6 Ft. Box(1986)
66=Comanche 2WD-7 Ft. Box(1986)
63=Comanche 4WD-6 Ft. Box(1986)
65=Comanche 4WD-7 Ft. Box(1986)
15=Grand Wagoneer 4 Dr.(1984-86)
25=J-10 Truck 7 Ft. Box(1981-84)
26=J10 Truck 8 Ft. Box(1981-86)
27=J-20 Truck 8 Ft. Box(1981-86)
15=Wagoneer 4 Dr.(1981-83)
75=Wagoneer 4WD-4 Dr.(1984-86)

BODY
CJ=CJ-5, CJ-6, CJ-7, CJ-8, Scrambler(1981-86)
MJ=Comanche Pickup(1986)

STYLES
SJ=Wagoneer(1981-83), Grand Wagoneer(1984-86), Cherokee(1981-83), J-10, J-20(1981-86)
XJ=Wagoneer(1984-86), Cherokee(1984-86)

AR = Use as Required - = Non Illustrated Part P.A.R. = Paint as Required

« RETURN TO GROUP INDEX

DECALS, EXTERIOR LAREDO, 1981-82 J10, J20
Figure 23-1010

81J68 10100

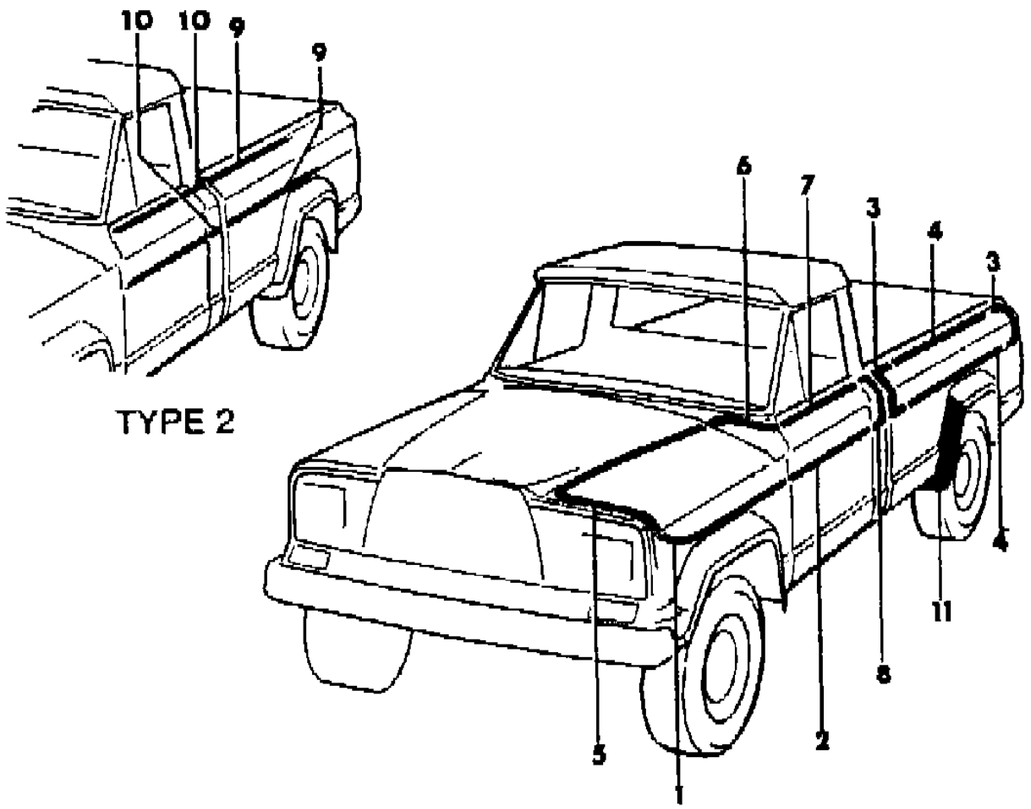

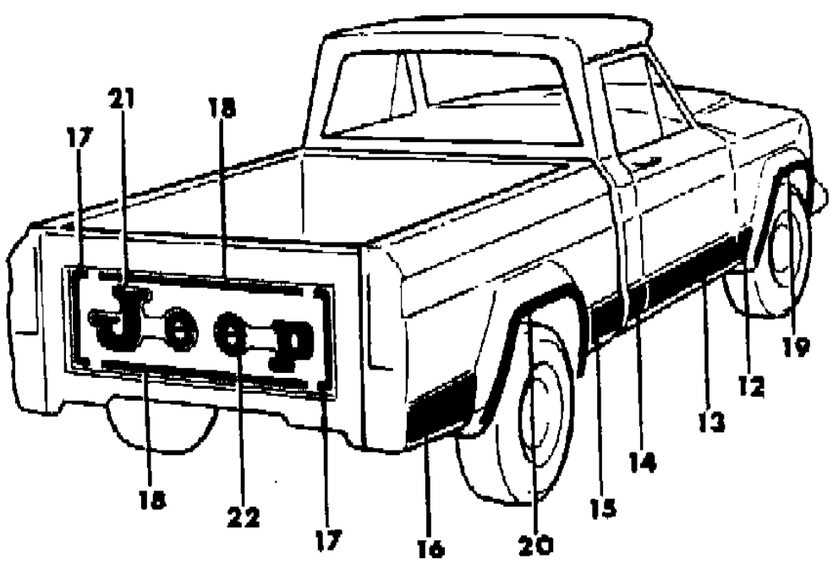

ITEM	PART NUMBER	QTY	BODY	MODEL	DESCRIPTION
1					DECAL, Fender
					Right
	J575 6072	1			Bronze/Nutmeg
	J576 1036	1			Burnt Orange/Nutmeg
	J575 0640	1			Silver (a)
	J575 5600	1			Silver (b)
					Left
	J575 6073	1			Bronze/Nutmeg
	J576 1037	1			Burnt Orange/Nutmeg
	J575 0639	1			Silver (a)
	J575 5601	1			Silver (b)
2					DECAL, Door
					Right
	J575 6076	1			Bronze/Nutmeg
	J576 1040	1			Burnt Orange/Nutmeg
	J575 0648	1			Silver (a)
	J575 5596	1			Silver (b)
					Left
	J575 6077	1			Bronze/Nutmeg
	J576 1041	1			Burnt Orange/Nutmeg
	J575 0647	1			Silver (a)
	J575 5597	1			Silver (b)
3					DECAL, Cargo Box Side
	J575 6089	4			Bronze/Nutmeg
	J576 1061	4			Burnt Orange/Nutmeg
	J575 0607	4			Silver (a)
	J575 5547	4			Silver (b)
4					DECAL, Cargo Box Side
	J575 6092	4			Bronze/Nutmeg, Modification Required
	J576 1062	4			Burnt Orange/Nutmeg, Modification Required
	J575 0609	4			Silver, Modification Required (a)
	J575 5549	4			Silver, Modification Required (b)
5					DECAL, Hood
					Right
	J575 6074	1			Bronze/Nutmeg
	J576 1038	1			Burnt Orange/Nutmeg
	J575 0644	1			Silver (a)
	J575 5578	1			Silver (b)
					Left

MODEL CODES

16=Cherokee 2 Dr.(1981-83)	78=Cherokee 4WD-4 Dr.(1984-86)	64=Comanche 2WD-6 Ft. Box(1986)	25=J-10 Truck 7 Ft. Box(1981-84)
17=Cherokee 2 Dr.(1981-83)	85=CJ-5 (1981-83)	66=Comanche 2WD-7 Ft. Box(1986)	26=J10 Truck 8 Ft. Box(1981-86)
73=Cherokee 2WD-2 Dr.(1984-86)	86=CJ-6(1981)	63=Comanche 4WD-6 Ft. Box(1986)	27=J-20 Truck 8 Ft. Box(1981-86)
74=Cherokee 2WD-4 Dr.(1984-86)	87=CJ-7(1981-86)	65=Comanche 4WD-7 Ft. Box(1986)	15=Wagoneer 4 Dr.(1981-83)
18=Cherokee 4 Dr.(1981-83)	88=CJ-8, Scrambler(1981-86)	15=Grand Wagoneer 4 Dr.(1984-86)	75=Wagoneer 4WD-4 Dr.(1984-86)
77=Cherokee 4WD-2 Dr.(1984-86)			

BODY
CJ=CJ-5, CJ-6, CJ-7, CJ-8, Scrambler(1981-86)
MJ=Comanche Pickup(1986)

STYLES
SJ=Wagoneer(1981-83), Grand Wagoneer(1984-86), Cherokee(1981-83), J-10, J-20(1981-86)
XJ=Wagoneer(1984-86), Cherokee(1984-86)

AR = Use as Required - = Non Illustrated Part P.A.R. = Paint as Required

DECALS, EXTERIOR LAREDO, 1981-82 J10, J20
Figure 23-1010

81J68 10100

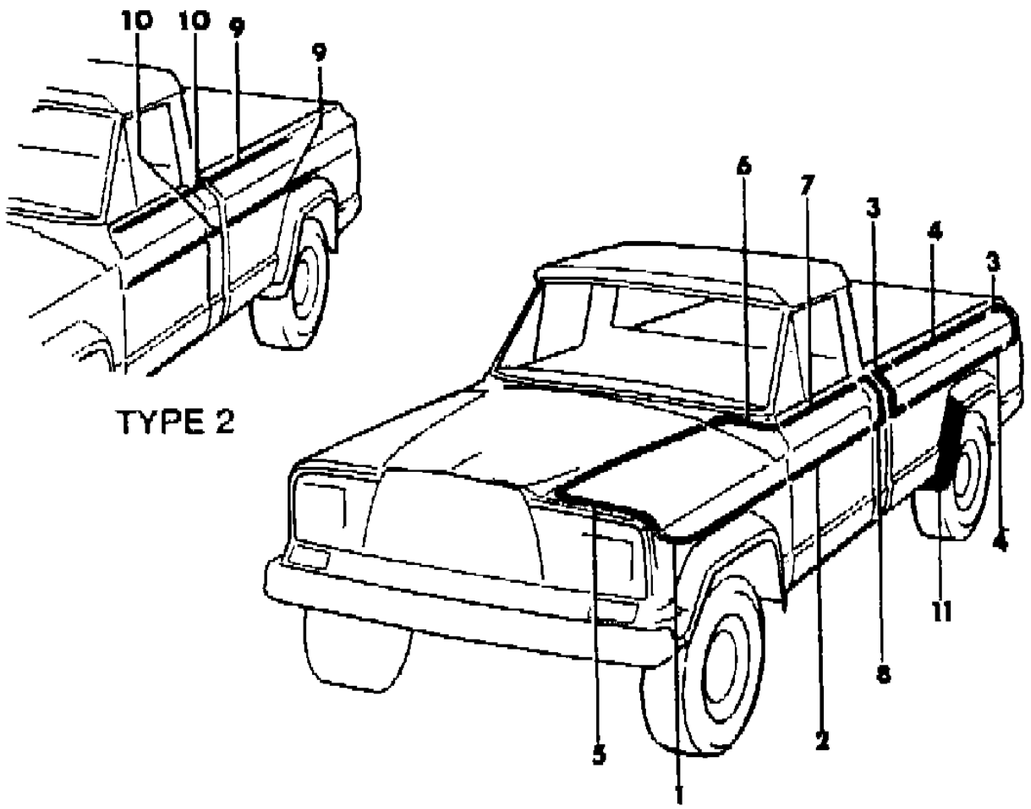

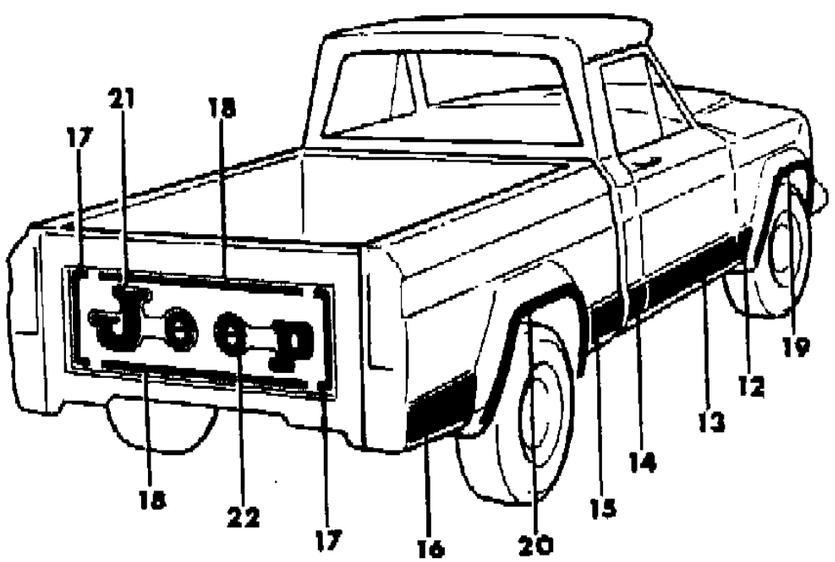

ITEM	PART NUMBER	QTY	BODY	MODEL	DESCRIPTION
	J575 6075	1			Bronze/Nutmeg
	J576 1039	1			Burnt Orange/Nutmeg
	J575 0643	1			Silver (a)
	J575 5579	1			Silver (b)
6					DECAL, Cowl
					Right
	J575 6078	1			Bronze/Nutmeg
	J576 1042	1			Burnt Orange/Nutmeg
	J575 0656	1			Silver (a)
	J575 5584	1			Silver (b)
					Left
	J575 6079	1			Bronze/Nutmeg
	J576 1043	1			Burnt Orange/Nutmeg
	J575 0655	1			Silver (a)
	J575 5585	1			Silver (b)
7					DECAL, Door
					Right
	J575 6080	1			Bronze/Nutmeg
	J576 1044	1			Burnt Orange/Nutmeg
	J575 0660	1			Silver (a)
	J575 5588	1			Silver (b)
					Left
	J575 6081	1			Bronze/Nutmeg
	J576 1045	1			Burnt Orange/Nutmeg
	J575 0659	1			Silver (a)
	J575 5589	1			Silver (b)
8					DECAL, Cab Rear Quarter
					Right
	J575 6102	1			Bronze/Nutmeg
	J576 1072	1			Burnt Orange/Nutmeg
	J575 0652	1			Silver (a)
	J575 6092	1			Silver (b)
					Left
	J575 6103	1			Bronze/Nutmeg
	J576 1073	1			Burnt Orange/Nutmeg
	J575 0651	1			Silver (a)
	J575 5593	1			Silver (b)
9					DECAL, Cargo Box Side
	J575 6092	4			Bronze/Nutmeg, Modification Required

MODEL CODES

16=Cherokee 2 Dr.(1981-83)	78=Cherokee 4WD-4 Dr.(1984-86)	64=Comanche 2WD-6 Ft. Box(1986)	25=J-10 Truck 7 Ft. Box(1981-84)
17=Cherokee 2 Dr.(1981-83)	85=CJ-5 (1981-83)	66=Comanche 2WD-7 Ft. Box(1986)	26=J10 Truck 8 Ft. Box(1981-86)
73=Cherokee 2WD-2 Dr.(1984-86)	86=CJ-6(1981)	63=Comanche 4WD-6 Ft. Box(1986)	27=J-20 Truck 8 Ft. Box(1981-86)
74=Cherokee 2WD-4 Dr.(1984-86)	87=CJ-7(1981-86)	65=Comanche 4WD-7 Ft. Box(1986)	15=Wagoneer 4 Dr.(1981-83)
18=Cherokee 4 Dr.(1981-83)	88=CJ-8, Scrambler(1981-86)	15=Grand Wagoneer 4 Dr.(1984-86)	75=Wagoneer 4WD-4 Dr.(1984-86)
77=Cherokee 4WD-2 Dr.(1984-86)			

BODY
CJ=CJ-5, CJ-6, CJ-7, CJ-8, Scrambler(1981-86)
MJ=Comanche Pickup(1986)

STYLES
SJ=Wagoneer(1981-83), Grand Wagoneer(1984-86), Cherokee(1981-83), J-10, J-20(1981-86)
XJ=Wagoneer(1984-86), Cherokee(1984-86)

AR = Use as Required - = Non Illustrated Part P.A.R. = Paint as Required

DECALS, EXTERIOR LAREDO, 1981-82 J10, J20
Figure 23-1010

81J68 10100

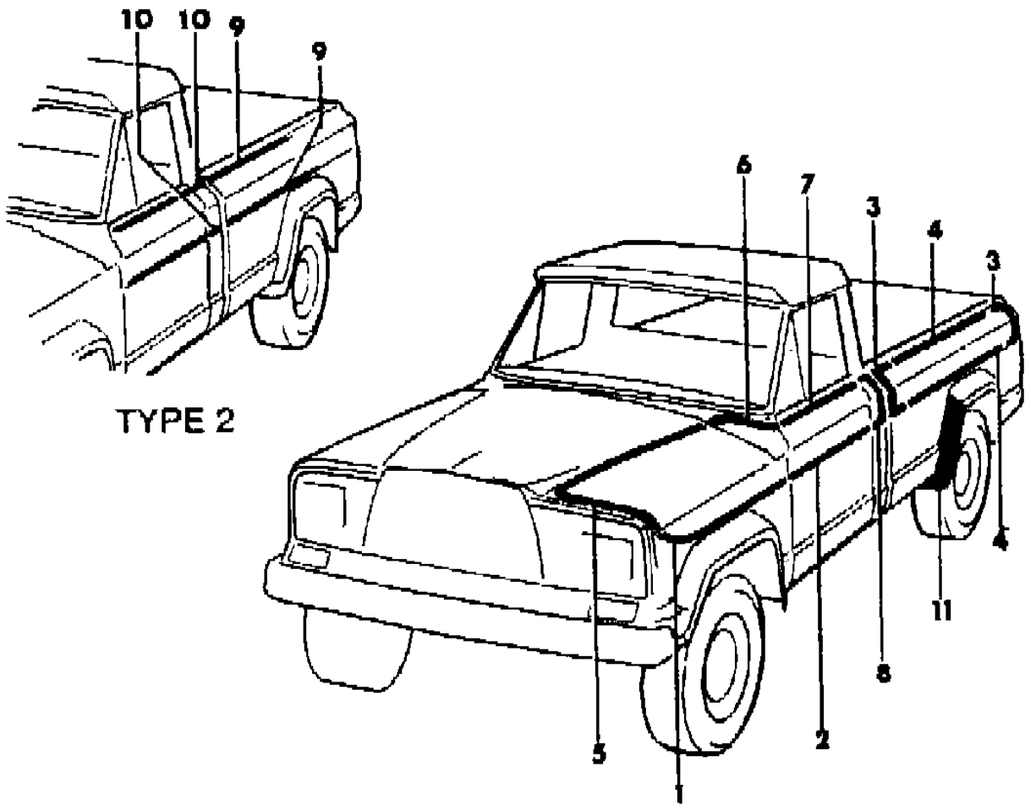

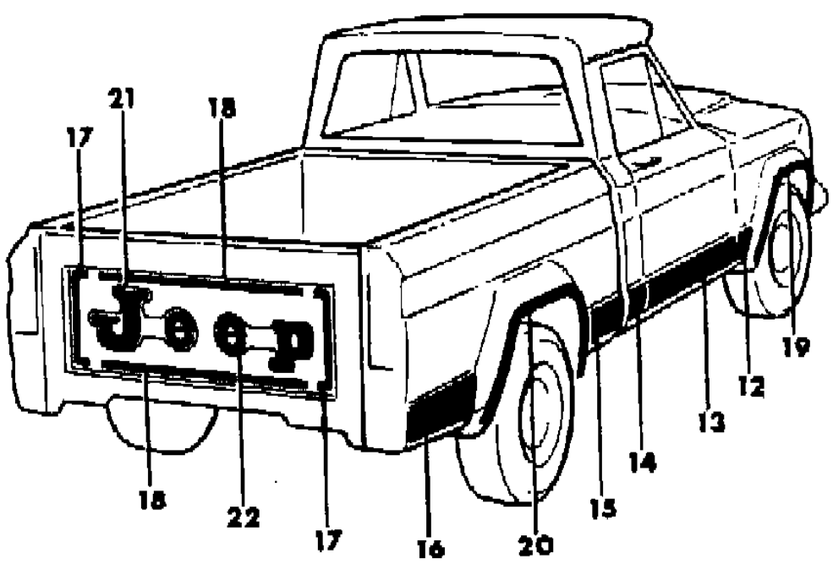

ITEM	PART NUMBER	QTY	BODY	MODEL	DESCRIPTION
	J576 1062	4			Burnt Orange/Nutmeg, Modification Required
	J575 0609	4			Silver, Modification Required, (a)
	J575 5549	4			Silver, Modification Required (b)
10					DECAL, Cab Rear Quarter
	J575 5367	4			Silver
11	J575 3814-5	1			PROTECTOR, Clear
12					DECAL, Fender
					Right
	J575 6068	1			Bronze/Nutmeg
	J576 1032	1			Burnt Orange/Nutmeg
	J575 0620	1			Silver (a)(c)
	J575 4914	1			Silver (b)(d)
					Left
	J575 6069	1			Bronze/Nutmeg
	J576 1033	1			Burnt Orange/Nutmeg
	J575 0619	1			Silver (a)(c)
	J575 4913	1			Silver (b)(d)
13					DECAL, Door
					Right
	J575 6070	1			Bronze/Nutmeg
	J576 1034	1			Burnt Orange/Nutmeg
	J575 0624	1			Silver (a)(c)
	J575 5826	1			Silver (b)(d)
					Left
	J575 6071	1			Bronze/Nutmeg
	J576 1035	1			Burnt Orange/Nutmeg
	J575 0623	1			Silver (a)(c)
	J575 5827	1			Silver (b)(d)
14					DECAL, Cab Rear Quarter
					Right
	J575 6096	1			Bronze/Nutmeg
	J576 1066	1			Burnt Orange/Nutmeg
	J575 0628	1			Silver (a)(c)
	J575 4910	1			Silver (b)(d)
					Left
	J575 6097	1			Bronze/Nutmeg
	J576 1067	1			Burnt Orange/Nutmeg
	J575 0627	1			Silver (a)(c)
	J575 4909	1			Silver (b)(d)

MODEL CODES

16=Cherokee 2 Dr.(1981-83)
17=Cherokee 2 Dr.(1981-83)
73=Cherokee 2WD-2 Dr.(1984-86)
74=Cherokee 2WD-4 Dr.(1984-86)
18=Cherokee 4 Dr.(1981-83)
77=Cherokee 4WD-2 Dr.(1984-86)
78=Cherokee 4WD-4 Dr.(1984-86)
85=CJ-5 (1981-83)
86=CJ-6(1981)
87=CJ-7(1981-86)
88=CJ-8, Scrambler(1981-86)
64=Comanche 2WD-6 Ft. Box(1986)
66=Comanche 2WD-7 Ft. Box(1986)
63=Comanche 4WD-6 Ft. Box(1986)
65=Comanche 4WD-7 Ft. Box(1986)
15=Grand Wagoneer 4 Dr.(1984-86)
25=J-10 Truck 7 Ft. Box(1981-84)
26=J10 Truck 8 Ft. Box(1981-86)
27=J-20 Truck 8 Ft. Box(1981-86)
15=Wagoneer 4 Dr.(1981-83)
75=Wagoneer 4WD-4 Dr.(1984-86)

BODY
CJ=CJ-5, CJ-6, CJ-7, CJ-8, Scrambler(1981-86)
MJ=Comanche Pickup(1986)

STYLES
SJ=Wagoneer(1981-83), Grand Wagoneer(1984-86), Cherokee(1981-83), J-10, J-20(1981-86)
XJ=Wagoneer(1984-86), Cherokee(1984-86)

AR = Use as Required - = Non Illustrated Part P.A.R. = Paint as Required

DECALS, EXTERIOR LAREDO, 1981-82 J10, J20
Figure 23-1010

81J68 10100

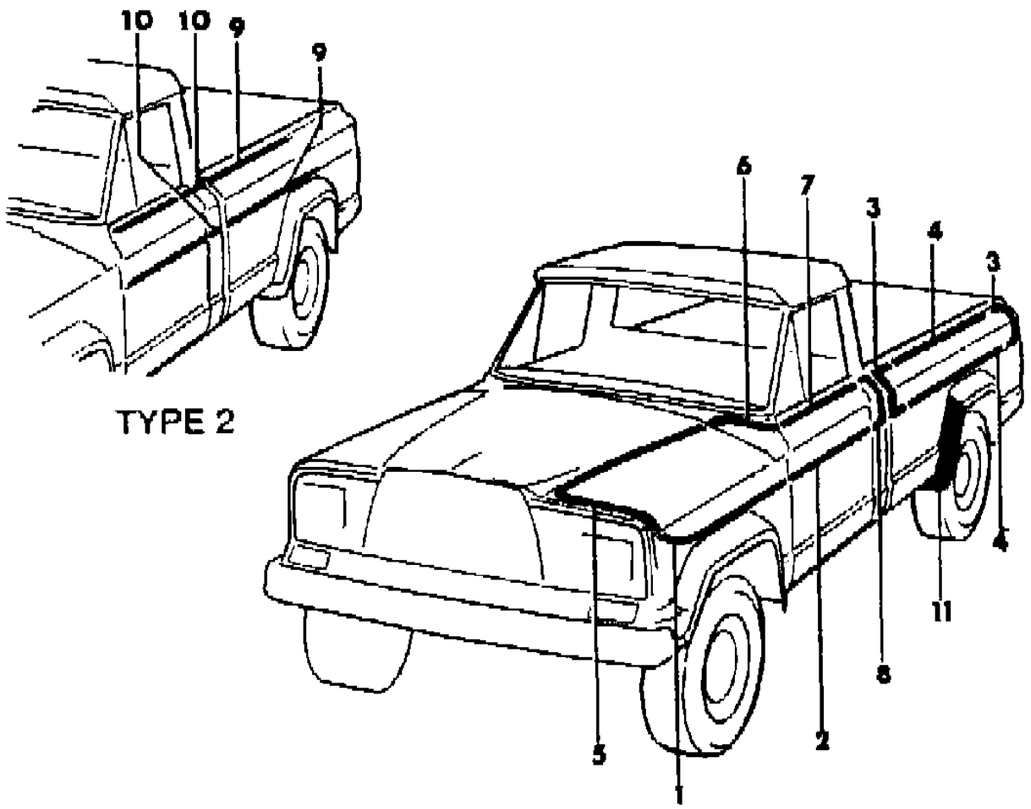

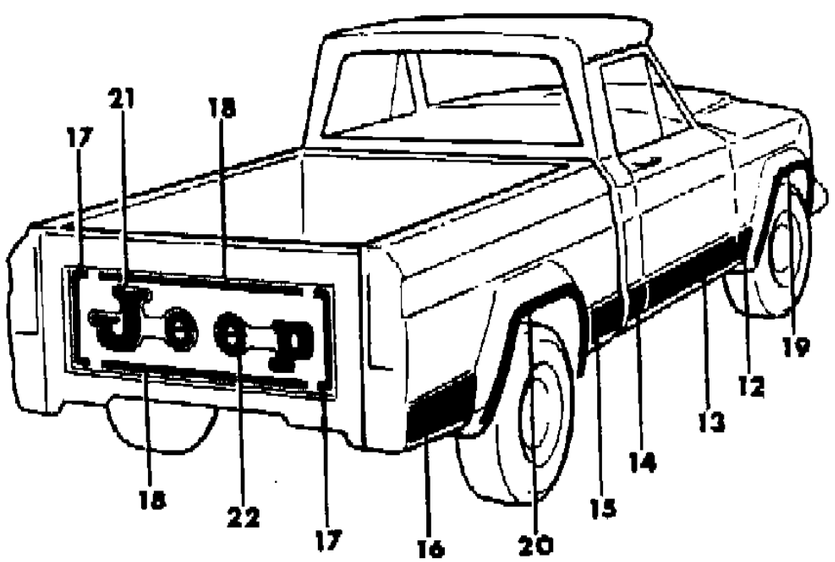

ITEM	PART NUMBER	QTY	BODY	MODEL	DESCRIPTION
15					DECAL, Cargo Box Side
					Right
	J575 6098	1			Bronze/Nutmeg
	J576 1068	1			Burnt Orange/Nutmeg
	J575 0632	1			Silver (a)(c)
	J575 4906	1			Silver (b)(d)
					Left
	J575 6099	1			Bronze/Nutmeg
	J576 1069	1			Burnt Orange/Nutmeg
	J575 0631	1			Silver (a)(c)
	J575 4905	1			Silver (b)(d)
16					DECAL, Cargo Box Side
					Right
	J575 6100	1			Bronze/Nutmeg
	J576 1070	1			Burnt Orange/Nutmeg
	J575 0636	1			Silver (a)(c)
	J575 4902	1			Silver (b)(d)
					Left
	J575 6101	1			Bronze/Nutmeg
	J576 1071	1			Burnt Orange/Nutmeg
	J575 0635	1			Silver (a)(c)
	J575 4901	1			Silver (b)(d)
17					DECAL, Tailgate
	J575 6094	2			Bronze/Nutmeg
	J576 1064	2			Burnt Orange/Nutmeg
	J575 0613	2			Silver (a)
	J575 5553	2			Silver (b)
18					DECAL, Tailgate
	J575 6093	2			Bronze/Nutmeg
	J576 1063	2			Burnt Orange/Nutmeg
	J575 0611	2			Silver (a)
	J575 5551	2			Silver (b)
19					DECAL, Wheel Opening
					Right
	J575 6044	1			Bronze/Nutmeg
	J576 1028	1			Burnt Orange/Nutmeg
	J575 0600	1			Silver (a)
	J575 5560	1			Silver (b)
					Left

MODEL CODES

16=Cherokee 2 Dr.(1981-83)	78=Cherokee 4WD-4 Dr.(1984-86)	64=Comanche 2WD-6 Ft. Box(1986)	25=J-10 Truck 7 Ft. Box(1981-84)
17=Cherokee 2 Dr.(1981-83)	85=CJ-5 (1981-83)	66=Comanche 2WD-7 Ft. Box(1986)	26=J10 Truck 8 Ft. Box(1981-86)
73=Cherokee 2WD-2 Dr.(1984-86)	86=CJ-6(1981)	63=Comanche 4WD-6 Ft. Box(1986)	27=J-20 Truck 8 Ft. Box(1981-86)
74=Cherokee 2WD-4 Dr.(1984-86)	87=CJ-7(1981-86)	65=Comanche 4WD-7 Ft. Box(1986)	15=Wagoneer 4 Dr.(1981-83)
18=Cherokee 4 Dr.(1981-83)	88=CJ-8, Scrambler(1981-86)	15=Grand Wagoneer 4 Dr.(1984-86)	75=Wagoneer 4WD-4 Dr.(1984-86)
77=Cherokee 4WD-2 Dr.(1984-86)			

BODY
CJ=CJ-5, CJ-6, CJ-7, CJ-8, Scrambler(1981-86)
MJ=Comanche Pickup(1986)

STYLES
SJ=Wagoneer(1981-83), Grand Wagoneer(1984-86), Cherokee(1981-83), J-10, J-20(1981-86)
XJ=Wagoneer(1984-86), Cherokee(1984-86)

AR = Use as Required - = Non Illustrated Part P.A.R. = Paint as Required

DECALS, EXTERIOR LAREDO, 1981-82 J10, J20
Figure 23-1010

81J68 10100

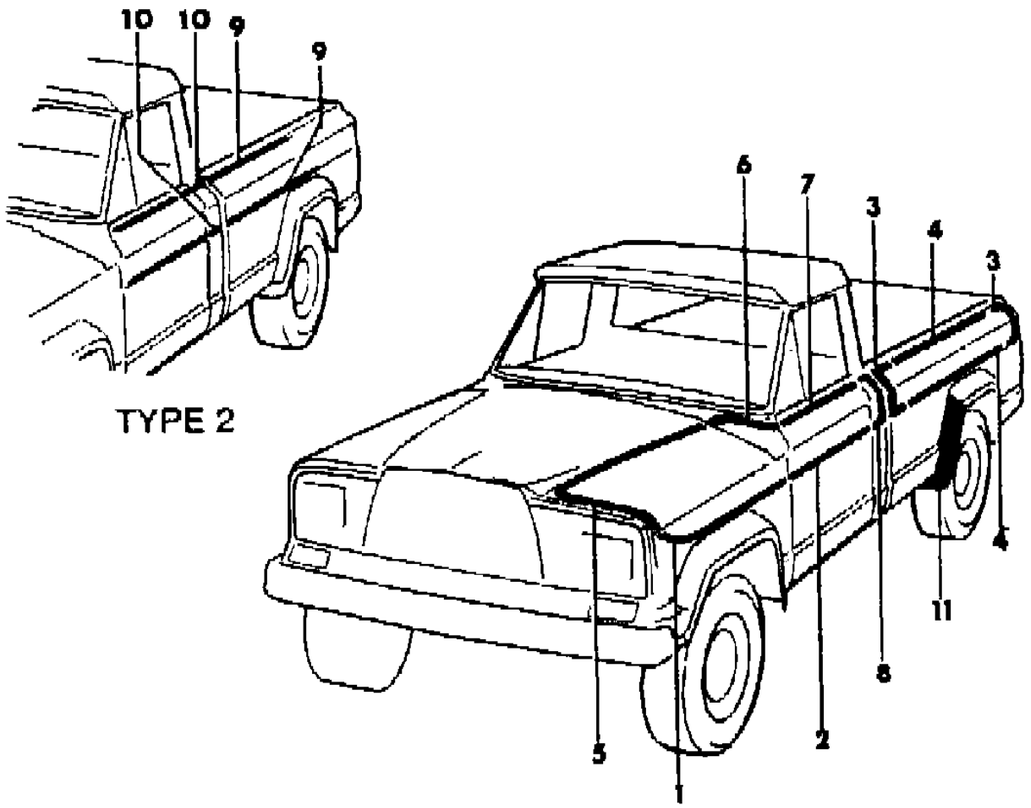

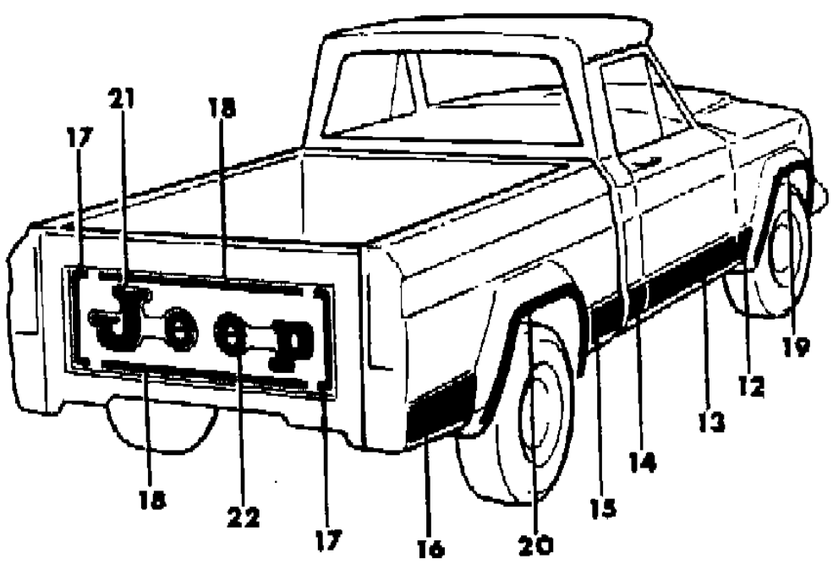

ITEM	PART NUMBER	QTY	BODY	MODEL	DESCRIPTION
	J575 6045	1			Bronze/Nutmeg
	J576 1029	1			Burnt Orange/Nutmeg
	J575 0599	1			Silver (a)
	J575 5561	1			Silver (b)
20					DECAL, Wheel Opening
	J575 6056	2			Bronze/Nutmeg
	J576 1030	2			Burnt Orange/Nutmeg
	J575 0603	2			Silver (a)
	J575 5564	2			Silver (b)
21					DECAL, Tailgate
	J575 6095	1			Bronze/Nutmeg
	J576 1065	1			Burnt Orange/Nutmeg
	J575 0615	1			Silver
22					DECAL, Tailgate
	J575 6104	1			Bronze/Nutmeg
	J576 1074	1			Burnt Orange/Nutmeg
	J575 0617	1			Silver

(a) Area between accent stripes is recessed, body paint is exposed (c) These Decals are used on 1983 vehicles after approximately 5-1-83

(b) Area between accent stripes is clear film, flush with entire decal (c) End of decal is open

(d) End of decal is closed (c) End of decal is open

MODEL CODES

16=Cherokee 2 Dr.(1981-83)
17=Cherokee 2 Dr.(1981-83)
73=Cherokee 2WD-2 Dr.(1984-86)
74=Cherokee 2WD-4 Dr.(1984-86)
18=Cherokee 4 Dr.(1981-83)
77=Cherokee 4WD-2 Dr.(1984-86)
78=Cherokee 4WD-4 Dr.(1984-86)
85=CJ-5 (1981-83)
86=CJ-6(1981)
87=CJ-7(1981-86)
88=CJ-8, Scrambler(1981-86)
64=Comanche 2WD-6 Ft. Box(1986)
66=Comanche 2WD-7 Ft. Box(1986)
63=Comanche 4WD-6 Ft. Box(1986)
65=Comanche 4WD-7 Ft. Box(1986)
15=Grand Wagoneer 4 Dr.(1984-86)
25=J-10 Truck 7 Ft. Box(1981-84)
26=J10 Truck 8 Ft. Box(1981-86)
27=J-20 Truck 8 Ft. Box(1981-86)
15=Wagoneer 4 Dr.(1981-83)
75=Wagoneer 4WD-4 Dr.(1984-86)

BODY
CJ=CJ-5, CJ-6, CJ-7, CJ-8, Scrambler(1981-86)
MJ=Comanche Pickup(1986)

STYLES
SJ=Wagoneer(1981-83), Grand Wagoneer(1984-86), Cherokee(1981-83), J-10, J-20(1981-86)
XJ=Wagoneer(1984-86), Cherokee(1984-86)

AR = Use as Required - = Non Illustrated Part P.A.R. = Paint as Required

DECALS, EXTERIOR LAREDO, 1983-86 J10, J20
Figure 23-1020

81J68 10200

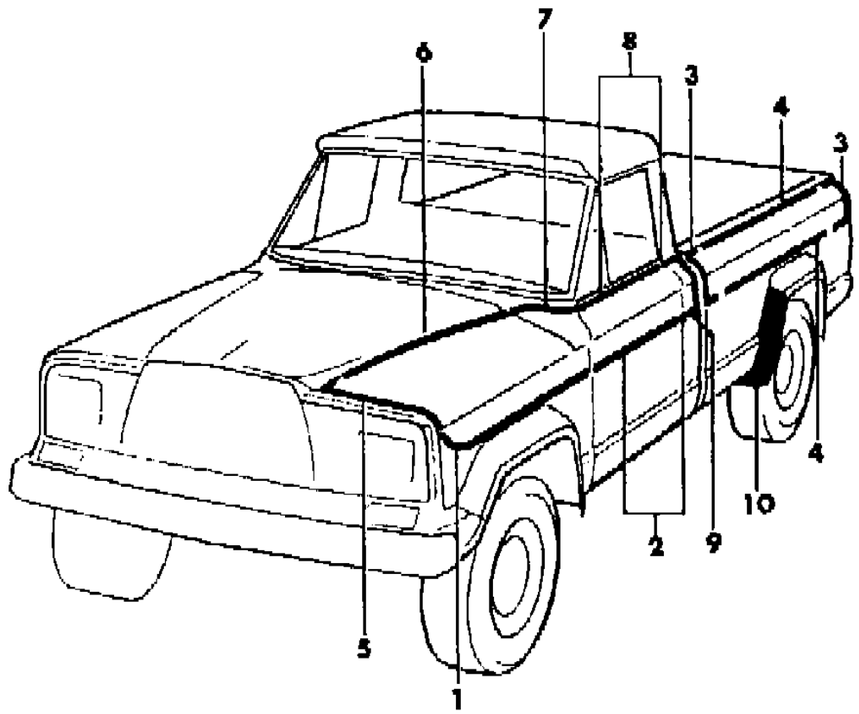

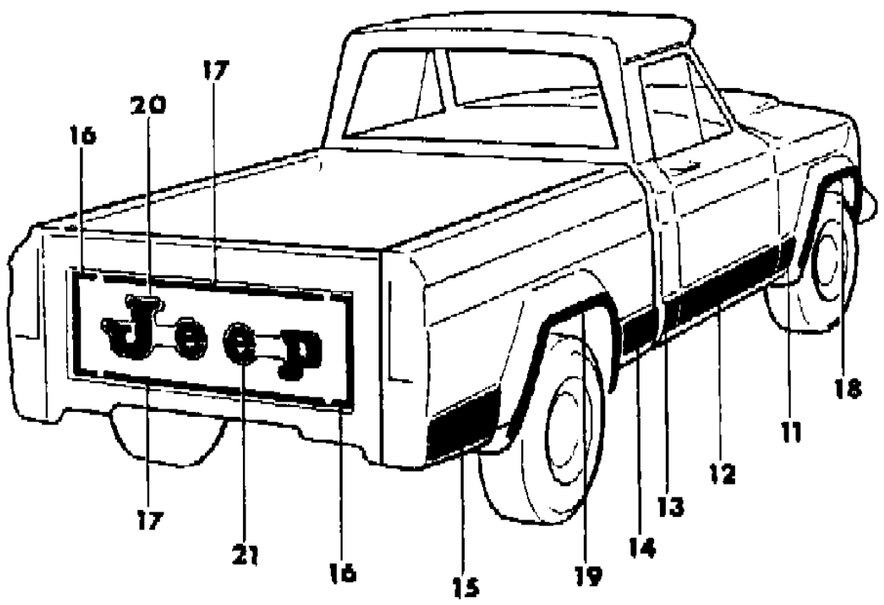

ITEM	PART NUMBER	QTY	BODY	MODEL	DESCRIPTION
1					DECAL, Fender
	J576 3092-3	1			Light Silver/ Dark Silver ***
	J576 3154-5	1			Orange/Nutmeg
2					DECAL, Door and Quarter
	J576 3098-9	1			Light Silver/Dark Silver, Modification Required
	J576 3160-1	1			Orange/Nutmeg, Modification Required
3					DECAL, Cargo Box Side
	J576 3134	4			Light Silver/Dark Silver
	J576 3198	4			Orange/Nutmeg
4					DECAL, Cargo Box Side
	J576 3135	4			Light Silver/Dark Silver
	J576 3199	4			Orange/Nutmeg
5					DECAL, Hood
	J576 3096-7	1			Light Silver/Dark Silver
	J576 3158-9	1			Orange/Nutmeg
6					DECAL, Hood
	J576 3094-5	1			Light Silver/Dark Silver
	J576 3156-7	1			Orange/Nutmeg
7					DECAL, Cowl
	J576 3100-1	1			Light Silver/Dark Silver
	J576 3162-3	1			Orange/Nutmeg
8					DECAL, Door and Quarter
	J576 3102-3	1			Light Silver/Dark Silver, Modification Required
	J576 3164-5	1			Orange/Nutmeg, Modification Required
9					DECAL, Cab Rear Quarter
	J576 3144-5	1			Light Silver/Dark Silver
	J576 3208-9	1			Orange/Nutmeg
10	J575 3814-5	1			PROTECTOR, Clear
11					DECAL, Fender
	J576 3088-9	1			Light Silver/Dark Silver
	J576 3150-1	1			Orange/Nutmeg
12					DECAL, Door
	J576 3091	1			Light Silver/Dark Silver
	J576 3153	1			Orange/Nutmeg
13					DECAL, Cab Rear Quarter
	J576 3138-9	1			Light Silver/Dark Silver
	J576 3202-3	1			Orange/Nutmeg
14					DECAL, Cargo Box Side
	J576 3140-1	1			Light Silver/Dark Silver

MODEL CODES

16=Cherokee 2 Dr.(1981-83)	78=Cherokee 4WD-4 Dr.(1984-86)	64=Comanche 2WD-6 Ft. Box(1986)	25=J-10 Truck 7 Ft. Box(1981-84)
17=Cherokee 2 Dr.(1981-83)	85=CJ-5 (1981-83)	66=Comanche 2WD-7 Ft. Box(1986)	26=J10 Truck 8 Ft. Box(1981-86)
73=Cherokee 2WD-2 Dr.(1984-86)	86=CJ-6(1981)	63=Comanche 4WD-6 Ft. Box(1986)	27=J-20 Truck 8 Ft. Box(1981-86)
74=Cherokee 2WD-4 Dr.(1984-86)	87=CJ-7(1981-86)	65=Comanche 4WD-7 Ft. Box(1986)	15=Wagoneer 4 Dr.(1981-83)
18=Cherokee 4 Dr.(1981-83)	88=CJ-8, Scrambler(1981-86)	15=Grand Wagoneer 4 Dr.(1984-86)	75=Wagoneer 4WD-4 Dr.(1984-86)
77=Cherokee 4WD-2 Dr.(1984-86)			

BODY
CJ=CJ-5, CJ-6, CJ-7, CJ-8, Scrambler(1981-86)
MJ=Comanche Pickup(1986)

STYLES
SJ=Wagoneer(1981-83), Grand Wagoneer(1984-86), Cherokee(1981-83), J-10, J-20(1981-86)
XJ=Wagoneer(1984-86), Cherokee(1984-86)

AR = Use as Required - = Non Illustrated Part P.A.R. = Paint as Required

DECALS, EXTERIOR LAREDO, 1983-86 J10, J20
Figure 23-1020

81J68 10200

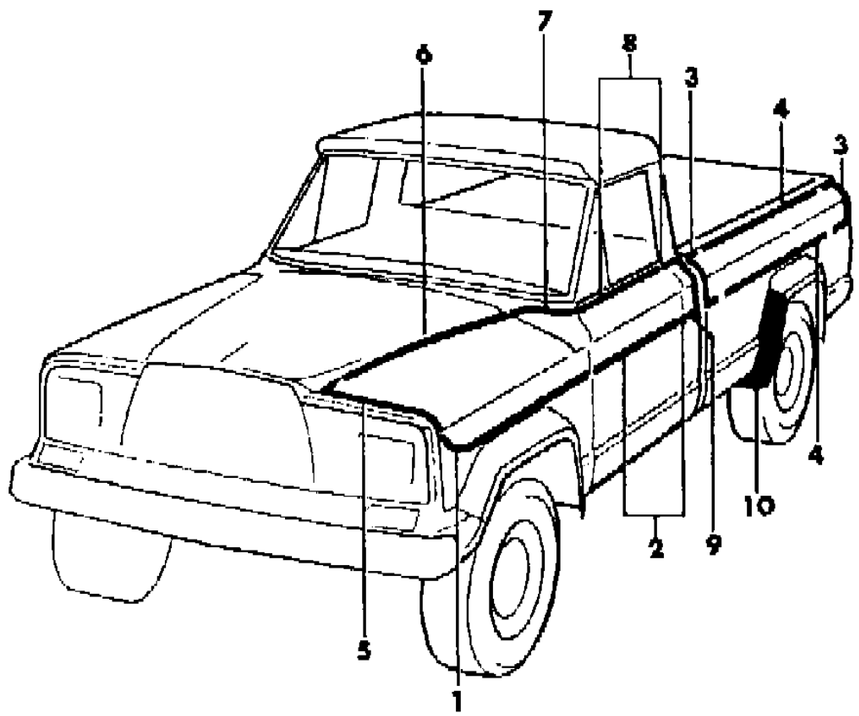

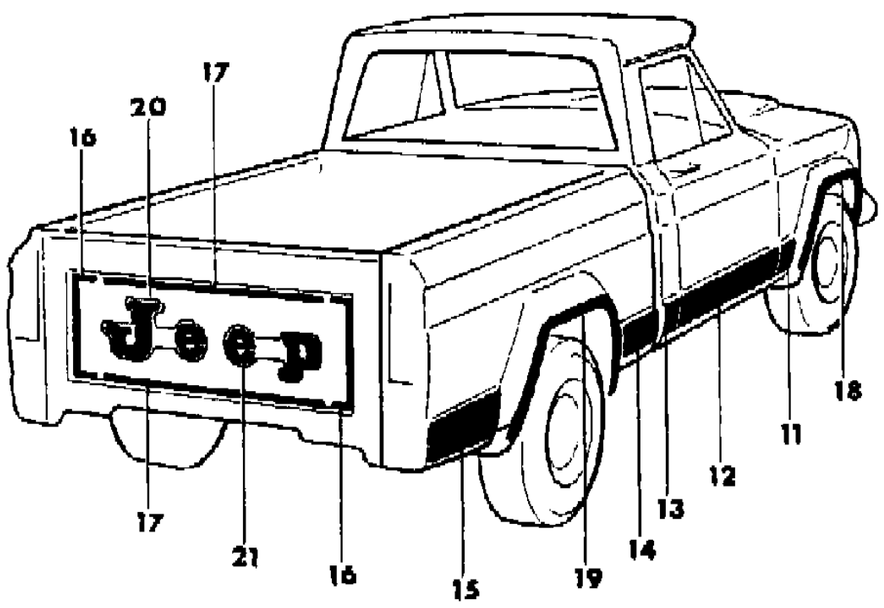

ITEM	PART NUMBER	QTY	BODY	MODEL	DESCRIPTION
	J576 3204-5	1			Orange/Nutmeg
15					DECAL, Cargo Box Side
	J576 3142-3	1			Light Silver/Dark Silver
	J576 3206-7	1			Orange/Nutmeg
16					DECAL, Tailgate
	J576 3137	2			Light Silver/Dark Silver
	J576 3201	2			Orange/Nutmeg
17					DECAL, Tailgate
	J576 3136	2			Light Silver/Dark Silver
	J576 3200	2			Orange/Nutmeg
18					DECAL, Wheel Opening
	J576 3084-5	1			Light Silver/Dark Silver
	J576 3146-7	1			Orange/Nutmeg
19					DECAL, Wheel Opening
	J576 3086	2			Light Silver/Dark Silver
	J576 3148	2			Orange/Nutmeg
20					DECAL, Tailgate
	J575 0615	1			Light Silver/Dark Silver
	J576 1065	1			Orange/Nutmeg
21					DECAL, Tailgate
	J575 0617	1			Light Silver/Dark Silver
	J576 1074	1			Orange/Nutmeg

MODEL CODES

16=Cherokee 2 Dr.(1981-83)
17=Cherokee 2 Dr.(1981-83)
73=Cherokee 2WD-2 Dr.(1984-86)
74=Cherokee 2WD-4 Dr.(1984-86)
18=Cherokee 4 Dr.(1981-83)
77=Cherokee 4WD-2 Dr.(1984-86)
78=Cherokee 4WD-4 Dr.(1984-86)
85=CJ-5 (1981-83)
86=CJ-6(1981)
87=CJ-7(1981-86)
88=CJ-8, Scrambler(1981-86)
64=Comanche 2WD-6 Ft. Box(1986)
66=Comanche 2WD-7 Ft. Box(1986)
63=Comanche 4WD-6 Ft. Box(1986)
65=Comanche 4WD-7 Ft. Box(1986)
15=Grand Wagoneer 4 Dr.(1984-86)
25=J-10 Truck 7 Ft. Box(1981-84)
26=J10 Truck 8 Ft. Box(1981-86)
27=J-20 Truck 8 Ft. Box(1981-86)
15=Wagoneer 4 Dr.(1981-83)
75=Wagoneer 4WD-4 Dr.(1984-86)

BODY
CJ=CJ-5, CJ-6, CJ-7, CJ-8, Scrambler(1981-86)
MJ=Comanche Pickup(1986)

STYLES
SJ=Wagoneer(1981-83), Grand Wagoneer(1984-86), Cherokee(1981-83), J-10, J-20(1981-86)
XJ=Wagoneer(1984-86), Cherokee(1984-86)

AR = Use as Required - = Non Illustrated Part P.A.R. = Paint as Required

NAMEPLATES SPORTSIDE J10
Figure 23-1030

81J68 10300

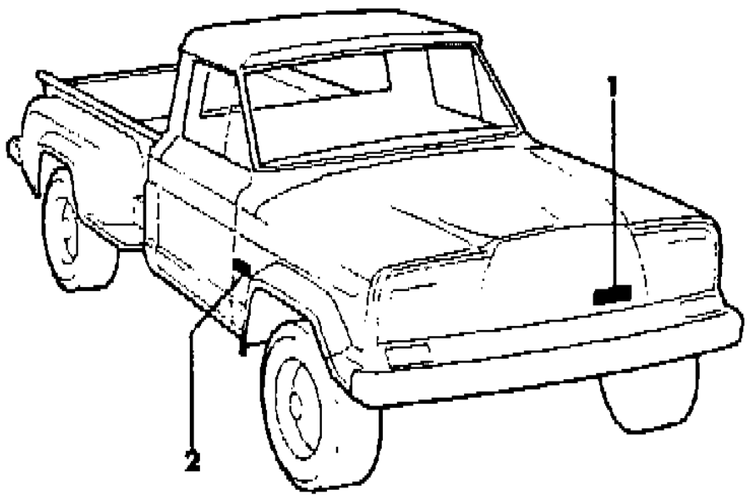

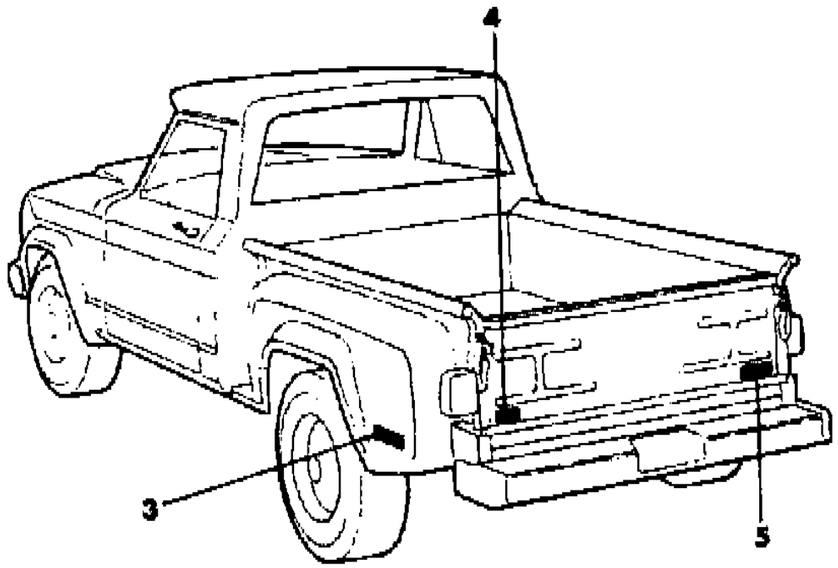

ITEM	PART NUMBER	QTY	BODY	MODEL	DESCRIPTION
1					NAMEPLATE
	J545 1627	1			Jeep
2					NAMEPLATE
	J545 2020	2			J10
3					NAMEPLATE
	J545 1628	2			Quadra-Trac
	J576 3574	2			Selec-Trac
4					NAMEPLATE
	J545 1985	1			Jeep
	J545 0348	1			AMC
5					NAMEPLATE
	J545 1635	1			4-Wheel Drive

MODEL CODES

16=Cherokee 2 Dr.(1981-83)
17=Cherokee 2 Dr.(1981-83)
73=Cherokee 2WD-2 Dr.(1984-86)
74=Cherokee 2WD-4 Dr.(1984-86)
18=Cherokee 4 Dr.(1981-83)
77=Cherokee 4WD-2 Dr.(1984-86)
78=Cherokee 4WD-4 Dr.(1984-86)
85=CJ-5 (1981-83)
86=CJ-6(1981)
87=CJ-7(1981-86)
88=CJ-8, Scrambler(1981-86)
64=Comanche 2WD-6 Ft. Box(1986)
66=Comanche 2WD-7 Ft. Box(1986)
63=Comanche 4WD-6 Ft. Box(1986)
65=Comanche 4WD-7 Ft. Box(1986)
15=Grand Wagoneer 4 Dr.(1984-86)
25=J-10 Truck 7 Ft. Box(1981-84)
26=J10 Truck 8 Ft. Box(1981-86)
27=J-20 Truck 8 Ft. Box(1981-86)
15=Wagoneer 4 Dr.(1981-83)
75=Wagoneer 4WD-4 Dr.(1984-86)

BODY
CJ=CJ-5, CJ-6, CJ-7, CJ-8, Scrambler(1981-86)
MJ=Comanche Pickup(1986)

STYLES
SJ=Wagoneer(1981-83), Grand Wagoneer(1984-86), Cherokee(1981-83), J-10, J-20(1981-86)
XJ=Wagoneer(1984-86), Cherokee(1984-86)

AR = Use as Required - = Non Illustrated Part P.A.R. = Paint as Required

« RETURN TO GROUP INDEX

DECALS, EXTERIOR SPORTSIDE, 1981-82 J10
Figure 23-1040

81J68 10400

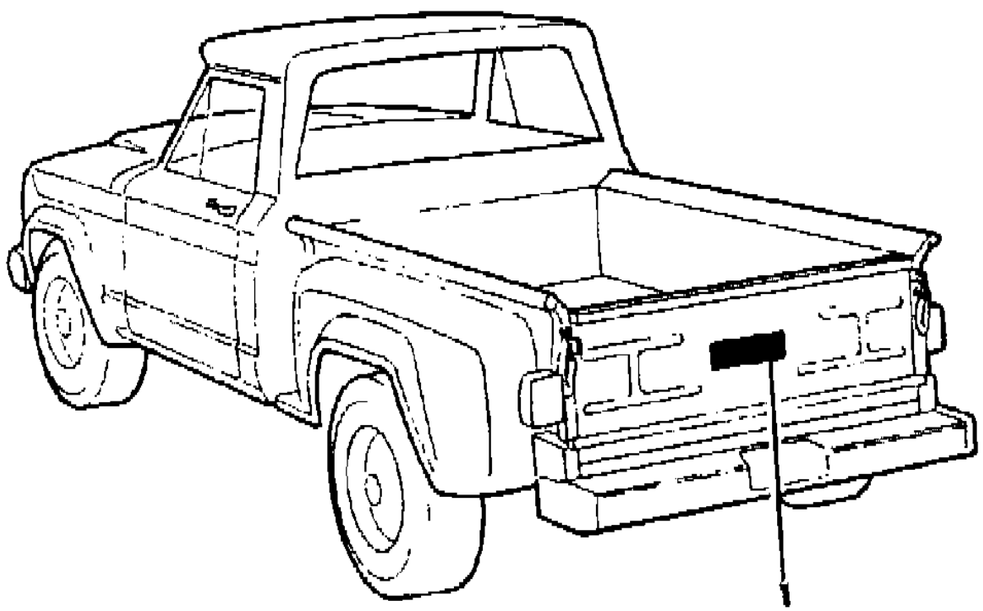

ITEM	PART NUMBER	QTY	BODY	MODEL	DESCRIPTION
1					DECAL, Tailgate
	J575 7701	1			Black
	J575 7700	1			White

MODEL CODES

16=Cherokee 2 Dr.(1981-83)	78=Cherokee 4WD-4 Dr.(1984-86)	64=Comanche 2WD-6 Ft. Box(1986)	25=J-10 Truck 7 Ft. Box(1981-84)
17=Cherokee 2 Dr.(1981-83)	85=CJ-5 (1981-83)	66=Comanche 2WD-7 Ft. Box(1986)	26=J10 Truck 8 Ft. Box(1981-86)
73=Cherokee 2WD-2 Dr.(1984-86)	86=CJ-6(1981)	63=Comanche 4WD-6 Ft. Box(1986)	27=J-20 Truck 8 Ft. Box(1981-86)
74=Cherokee 2WD-4 Dr.(1984-86)	87=CJ-7(1981-86)	65=Comanche 4WD-7 Ft. Box(1986)	15=Wagoneer 4 Dr.(1981-83)
18=Cherokee 4 Dr.(1981-83)	88=CJ-8, Scrambler(1981-86)	15=Grand Wagoneer 4 Dr.(1984-86)	75=Wagoneer 4WD-4 Dr.(1984-86)
77=Cherokee 4WD-2 Dr.(1984-86)			

BODY
CJ=CJ-5, CJ-6, CJ-7, CJ-8, Scrambler(1981-86)
MJ=Comanche Pickup(1986)

STYLES
SJ=Wagoneer(1981-83), Grand Wagoneer(1984-86), Cherokee(1981-83), J-10, J-20(1981-86)
XJ=Wagoneer(1984-86), Cherokee(1984-86)

AR = Use as Required - = Non Illustrated Part P.A.R. = Paint as Required

« RETURN TO GROUP INDEX

DECALS, EXTERIOR HONCHO J10
Figure 23-1050

81J68 10500

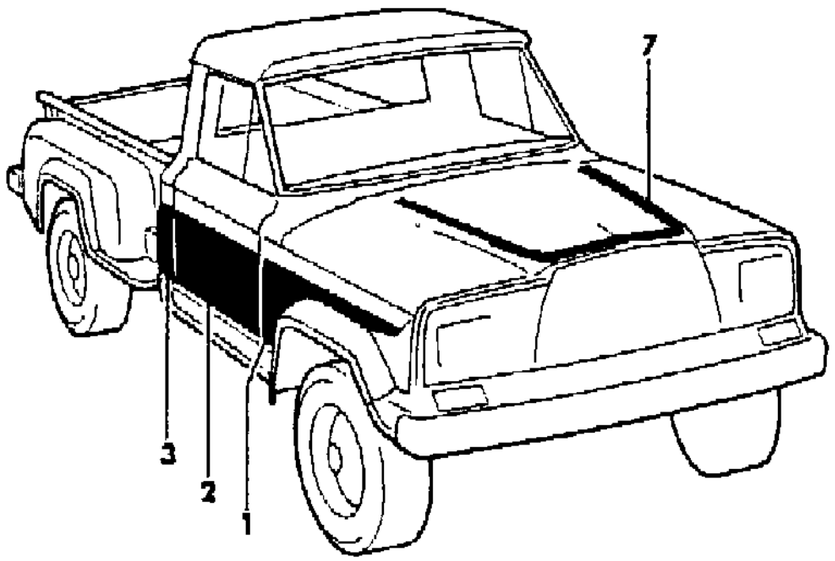

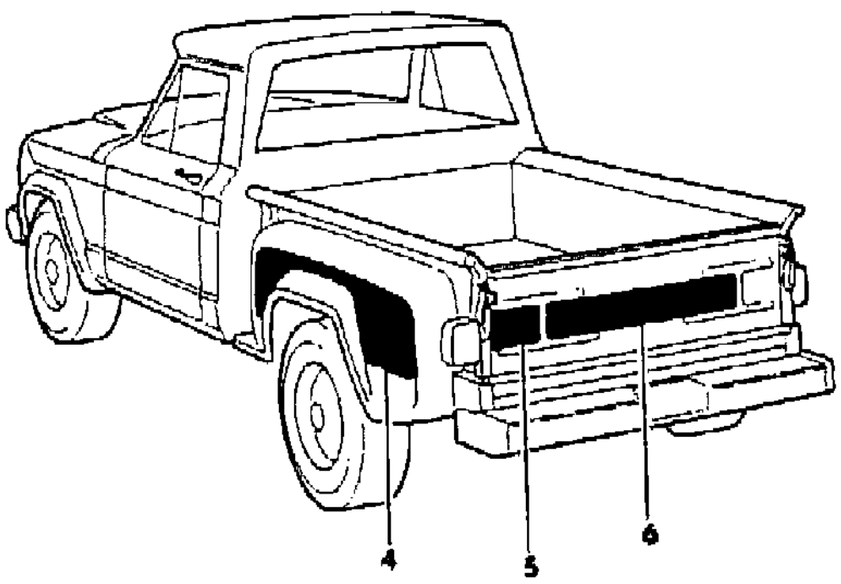

ITEM	PART NUMBER	QTY	BODY	MODEL	DESCRIPTION
1					DECAL, Fender
	J575 5834-5	1			Blues
	J575 5836-7	1			Coppers
	J575 5832-3	1			Reds
2					DECAL, Fender
	J575 5840-1	1			Blues
	J575 5842-3	1			Coppers
	J575 5838-9	1			Reds
3					DECAL, Cab Rear Quarter
	J575 5870-1	1			Blues
	J575 5872-3	1			Coppers
	J575 5868-9	1			Reds
4					DECAL, Cargo Box Side
	J575 5876-7	1			Blues
	J575 5878-9	1			Coppers
	J575 5874-5	1			Reds
5					DECAL, Tailgate
	J575 5884	2			Blues
	J575 5885	2			Coppers
	J575 5883	2			Reds
6					DECAL, Tailgate
	J575 5881	1			Blues
	J575 5882	1			Coppers
	J575 5880	1			Reds
7					DECAL, Hood
	J575 5829	1			Blues
	J575 5830	1			Coppers
	J575 5828	1			Reds

MODEL CODES

16=Cherokee 2 Dr.(1981-83)
17=Cherokee 2 Dr.(1981-83)
73=Cherokee 2WD-2 Dr.(1984-86)
74=Cherokee 2WD-4 Dr.(1984-86)
18=Cherokee 4 Dr.(1981-83)
77=Cherokee 4WD-2 Dr.(1984-86)
78=Cherokee 4WD-4 Dr.(1984-86)
85=CJ-5 (1981-83)
86=CJ-6(1981)
87=CJ-7(1981-86)
88=CJ-8, Scrambler(1981-86)
64=Comanche 2WD-6 Ft. Box(1986)
66=Comanche 2WD-7 Ft. Box(1986)
63=Comanche 4WD-6 Ft. Box(1986)
65=Comanche 4WD-7 Ft. Box(1986)
15=Grand Wagoneer 4 Dr.(1984-86)
25=J-10 Truck 7 Ft. Box(1981-84)
26=J10 Truck 8 Ft. Box(1981-86)
27=J-20 Truck 8 Ft. Box(1981-86)
15=Wagoneer 4 Dr.(1981-83)
75=Wagoneer 4WD-4 Dr.(1984-86)

BODY
CJ=CJ-5, CJ-6, CJ-7, CJ-8, Scrambler(1981-86)
MJ=Comanche Pickup(1986)

STYLES
SJ=Wagoneer(1981-83), Grand Wagoneer(1984-86), Cherokee(1981-83), J-10, J-20(1981-86)
XJ=Wagoneer(1984-86), Cherokee(1984-86)

AR = Use as Required - = Non Illustrated Part P.A.R. = Paint as Required

« RETURN TO GROUP INDEX

ILLUSTRATION NOT AVAILABLE AT TIME OF PUBLICATION

GROUP 23A - BODY - SHEET METAL EXCEPT DOORS

ILLUSTRATION TITLE	GROUP-FIG. NO.
CJ	
PAN, FLOOR, FRONT AND REAR CJ	Fig. 23A-100
FENDERS, FRONT CJ	Fig. 23A-200
HOOD, LOCK AND CATCHES CJ	Fig. 23A-300
WINDSHIELD FRAME AND HINGES PANEL, DASH CJ	Fig. 23A-400
GLASS, MIRROR, INSIDE REAR VIEW LESS WORLD CAB CJ	Fig. 23A-500
GLASS, MIRROR, INSIDE REAR VIEW WITH WORLD CAB, EXPORT CJ-7,8	Fig. 23A-600
SEALS, WINDOW CJ	Fig. 23A-700
TOP ENCLOSURE, FULL METAL, MEYER CAB CJ-5	Fig. 23A-800
TOP ENCLOSURE, FULL PLASTIC CJ-7	Fig. 23A-900
TOP ENCLOSURE, FULL METAL, WORLD CAB, EXPORT CJ-7,8	Fig. 23A-1000
TOP ENCLOSURE, HALF PLASTIC SCRAMBLER	Fig. 23A-1100
PANELS, BODY SIDE CJ	Fig. 23A-1200
TAILGATE CJ-5,6	Fig. 23A-1300
TAILGATE CJ-7,8, SCRAMBLER	Fig. 23A-1400
HINGES, TAILGATE CJ	Fig. 23A-1500
SPORT BAR CJ	Fig. 23A-1600
SOFT TOP HARDWARE WITH FULL SOFT DOORS CJ-5,7	Fig. 23A-1700
SOFT TOP AND WINDOWS WITH FULL SOFT TOP CJ-5,7	Fig. 23A-1800
SOFT TOP HARDWARE WITH FULL HARD DOORS CJ-7	Fig. 23A-1900
SOFT TOP AND WINDOWS WITH FULL HARD DOORS CJ-7	Fig. 23A-2000
SOFT HALF TOP HARDWARE WITH FULL SOFT DOORS SCRAMBLER	Fig. 23A-2100
SOFT HALF TOP AND WINDOWS WITH FULL SOFT DOORS SCRAMBLER	Fig. 23A-2200
SOFT HALF TOP HARDWARE WITH FULL HARD DOORS SCRAMBLER	Fig. 23A-2300
SOFT HALF TOP AND WINDOWS WITH FULL HARD DOORS SCRAMBLER	Fig. 23A-2400
SOFT TOP HARDWARE WITH FULL HARD DOORS CJ-8 EXPORT	Fig. 23A-2500
SOFT TOP AND WINDOWS WITH FULL HARD DOORS CJ-8 EXPORT	Fig. 23A-2600
TONNEAU COVER SCRAMBLER	Fig. 23A-2700
LIFT DOOR, LATCH AND HINGES WITH MEYER CAB CJ-5	Fig. 23A-2800
LIFT DOOR, LATCH AND HINGES WITH HARDTOP ENCLOSURE CJ-7	Fig. 23A-2900
SUNROOF, POP-UP WITH PLASTIC TOP ENCLOSURE CJ-7	Fig. 23A-3000
RUNNING BOARDS STEP, BODY SIDE CJ	Fig. 23A-3100
XJ CHEROKEE, XJ WAGONEER, COMANCHE	
PAN, FLOOR XJ CHEROKEE, XJ WAGONEER	Fig. 23A-3200
PAN, FLOOR COMANCHE	Fig. 23A-3300
PLATES, UNDERBODY SKID XJ CHEROKEE, XJ WAGONEER	Fig. 23A-3400
PLATES, UNDERBODY SKID COMANCHE	Fig. 23A-3500

ILLUSTRATION TITLE	GROUP-FIG. NO.
XJ CHEROKEE, XJ WAGONEER, COMANCHE (Continued)	
PLATES, UNDERBODY SKID COMANCHE	Fig. 23A-3500
SEALS AND PLUGS, BODY XJ CHEROKEE, XJ WAGONEER, COMANCHE	Fig. 23A-3600
PANELS, FRONT END INNER AND WHEELHOUSE XJ CHEROKEE, XJ WAGONEER, COMANCHE	Fig. 23A-3700
FENDERS, FRONT XJ CHEROKEE, XJ WAGONEER, COMANCHE	Fig. 23A-3800
HOOD, LATCH AND HINGES XJ CHEROKEE, XJ WAGONEER, COMANCHE	Fig. 23A-3900
PANELS, COWL AND DASH XJ CHEROKEE, XJ WAGONEER, COMANCHE	Fig. 23A-4000
MIRROR INSIDE REAR VIEW XJ CHEROKEE, XJ WAGONEER, COMANCHE	Fig. 23A-4100
PANELS, BODY SIDE 2 DOOR XJ CHEROKEE	Fig. 23A-4200
PANELS, BODY SIDE 4 DOOR XJ CHEROKEE, XJ WAGONEER	Fig. 23A-4300
PANELS, BODY SIDE AND REAR COMANCHE	Fig. 23A-4400
PANELS, REAR QUARTER XJ CHEROKEE, XJ WAGONEER	Fig. 23A-4500
PANELS, REAR QUARTER 4 DOOR XJ CHEROKEE, XJ WAGONEER	Fig. 23A-4600
APPLIQUES, REAR QUARTER PANEL XJ CHEROKEE, XJ WAGONEER, COMANCHE	Fig. 23A-4700
PANELS, LOAD BARRIER AND AUXILLIARY FLOOR FRENCH COMMERICAL PACKAGE XJ CHEROKEE 2 DOOR, 79	Fig. 23A-4800
TAILGATE, LATCHES AND HINGES COMANCHE	Fig. 23A-4900
BOX, PICKUP COMANCHE	Fig. 23A-5000
LIFTDOOR, LATCH AND HINGES XJ CHEROKEE, XJ WAGONEER	Fig. 23A-5100
SPORT BAR COMANCHE	Fig. 23A-5200
RACK, ROOF LUGGAGE XJ CHEROKEE, XJ WAGONEER	Fig. 23A-5300
RACK, ROOF SPORTS DECK XJ CHEROKEE, XJ WAGONEER	Fig. 23A-5400
SUNROOF, POP-UP XJ CHEROKEE, XJ WAGONEER	Fig. 23A-5500
PANELS, ROOF XJ CHEROKEE, XJ WAGONEER COMANCHE	Fig. 23A-5600
GLASS COMANCHE	Fig. 23A-5700
SEAL, WINDOW COMANCHE	Fig. 23A-5800
GLASS, REAR QUARTER FIXED 2 DOOR XJ CHEROKEE	Fig. 23A-5900
SEAL LIFT DOOR XJ CHEROKEE, XJ WAGONEER	Fig. 23A-6000
SEALS, WINDOW 2 DOOR XJ CHEROKEE	Fig. 23A-6100
GLASS, STATIONARY WINDSHIELD, QUARTER AND LIFT DOOR 2 DOOR - XJ CHEROKEE	Fig. 23A-6200
GLASS, STATIONARY WINDSHIELD, QUARTER AND LIFT DOOR 4 DOOR - XJ CHEROKEE, XJ WAGONEER	Fig. 23A-6300
SEALS QUARTER AND LIFT DOOR WINDOW 4 DOOR - XJ CHEROKEE, XJ WAGONEER	Fig. 23A-6400
SJ CHEROKEE, SJ WAGONEER, J10, J20	
PAN, FLOOR SJ CHEROKEE, SJ WAGONEER	Fig. 23A-6500
PAN, FLOOR J10, J20	Fig. 23A-6600
SEALS AND PLUGS, BODY SJ CHEROKEE, SJ WAGONEER, J10, J20	Fig. 23A-6700

GROUP 23A - BODY - SHEET METAL EXCEPT DOORS

ILLUSTRATION TITLE	GROUP-FIG. NO.
SJ CHEROKEE, SJ WAGONEER, J10, J20 (Continued)	
SEALS AND PLUGS, BODY SJ CHEROKEE, SJ WAGONEER, J10, J20	Fig. 23A-6700
FENDERS, FRONT SJ CHEROKEE, SJ WAGONEER, J10, J20	Fig. 23A-6800
HOOD AND HINGES SJ CHEROKEE, SJ WAGONEER, J10, J20	Fig. 23A-6900
LOCK AND RELEASE, HOOD SJ CHEROKEE, SJ WAGONEER, J10, J20	Fig. 23A-7000
PANELS, COWL AND DASH SJ CHEROKEE, SJ WAGONEER, J10, J20	Fig. 23A-7100
MIRROR, INSIDE REAR VIEW SJ CHEROKEE, SJ WAGONEER, J10, J20	Fig. 23A-7200
PANELS, BODY SIDE 4 DOOR XJ CHEROKEE, XJ WAGONEER	Fig. 23A-7300
PANELS, BODY SIDE 2 DOOR SJ CHEROKEE	Fig. 23A-7400
PANELS, REAR QUARTER 4 DOOR SJ CHEROKEE, SJ WAGONEER	Fig. 23A-7500
PANELS, REAR QUARTER 2 DOOR SJ CHEROKEE	Fig. 23A-7600
TAILGATE AND HINGES SJ CHEROKEE, SJ WAGONEER	Fig. 23A-7700
LATCHES, TAILGATE SJ CHEROKEE, SJ WAGONEER	Fig. 23A-7800
REGULATOR, TAILGATE GLASS MANUAL SJ CHEROKEE, SJ WAGONEER	Fig. 23A-7900
REGULATOR, TAILGATE GLASS ELECTRIC SJ CHEROKEE, SJ WAGONEER	Fig. 23A-8000
PANELS, BODY SIDE AND REAR J10, J20	Fig. 23A-8100
PANELS, ROOF SJ CHEROKEE, SJ WAGONEER J10, J20	Fig. 23A-8200
SEALS AND GLASS WINDSHIELD, QUARTER AND TAILGATE SJ CHEROKEE, SJ WAGONEER	Fig. 23A-8300
SEALS AND GLASS WINDSHIELD AND REAR WINDOWS J10, J20	Fig. 23A-8400
RACK, ROOF LUGGAGE SJ CHEROKEE, SJ WAGONEER	Fig. 23A-8500
SUNROOF, SLIDING SJ CHEROKEE, SJ WAGONEER	Fig. 23A-8600
SUNROOF, POP-UP SJ CHEROKEE, SJ WAGONEER	Fig. 23A-8700
RUNNING BOARDS SJ CHEROKEE 2 DOOR, MODEL 17	Fig. 23A-8800
CAP, PICKUP, TOWNSIDE J10, J20	Fig. 23A-8900
BOX, PICKUP, TOWNSIDE J10, J20	Fig. 23A-9000
MOUNTING HARDWARE, PICKUP BOX TOWNSIDE J10, J20	Fig. 23A-9100
TAILGATE, LATCH AND HINGES TOWNSIDE J10, J20	Fig. 23A-9200
BOX, PICKUP, SPORTSIDE J10	Fig. 23A-9300
MOUNTING HARDWARE, PICKUP BOX SPORTSIDE J10	Fig. 23A-9400
TAILGATE, LATCH AND HINGES SPORTSIDE J10	Fig. 23A-9500
SPORTBAR TOWNSIDE, SPORTSIDE J10, J20	Fig. 23A-9600
SOFT TOP AND HARDWARE TOWNSIDE, SPORTSIDE J10, J20	Fig. 23A-9700
SOFT TOP AND HARDWARE TOWNSIDE, SPORTSIDE J10, J20	Fig. 23A-9800
LABELS MISCELLANEOUS BODY CJ-5,6,7,8, SCRAMBLER	Fig. 23A-9900
LABELS MISCELLANEOUS BODY XJ CHEROKEE, XJ WAGONEER, COMANCHE	Fig. 23A-10000
LABELS MISCELLANEOUS BODY SJ CHEROKEE, SJ WAGONEER, J10, J20	Fig. 23A-10100

PAN, FLOOR, FRONT AND REAR CJ
Figure 23A-100

81J69 100

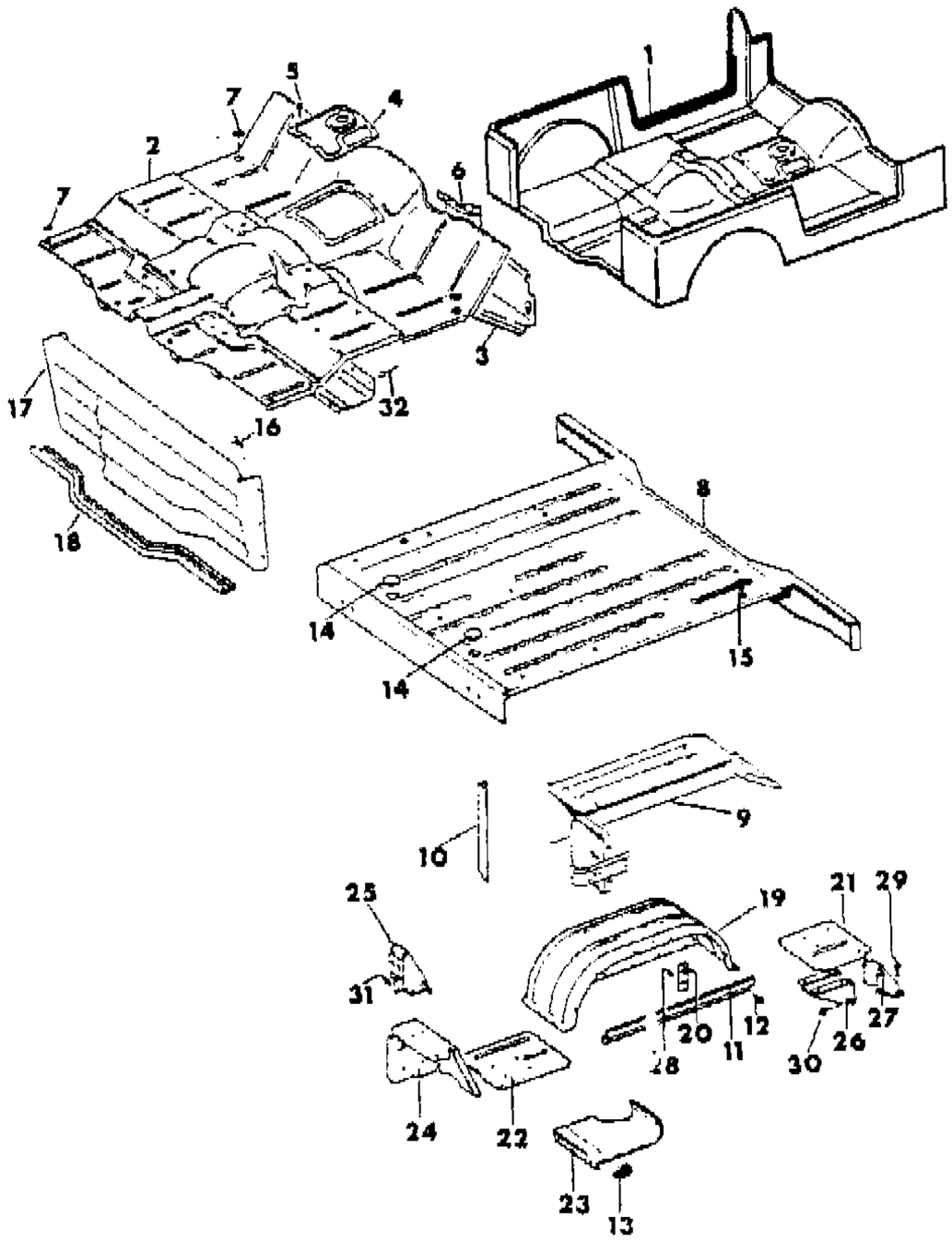

ITEM	PART NUMBER	QTY	BODY	MODEL	DESCRIPTION
1					SHELL, Body ***
				85	With Tailgate
	J575 6795	1			1981-82: With 8" Wheelhouse Panel
	J576 3740	1			1983: With 8" Wheelhouse Panel
	J575 6791	1			1981-82: With 11" Wheelhouse Panel
	J576 3736	1			1983: With 11" Wheelhouse Panel
				85	With Solid Back Panel
	J575 6799	1			1981-82
	J576 3744	1			1983
	J575 6812	1			1981-83: EXPORT, Right Hand Drive, With 8" Wheelhouse Panel
	J575 6805	1			1981-83: EXPORT, Right Hand Drive, With 8" Wheelhouse Panel
				86	-
	J575 6846	1			1981: EXPORT, Left Hand Drive, With 8" Wheelhouse Panel
	J575 6838	1			1981: EXPORT, Left Hand Drive, With 11" Wheelhouse Panel
	J575 6855	1			1981: EXPORT, Right Hand Drive, With 8" Wheelhouse Panel
	J575 6850	1			1981: EXPORT, Right Hand Drive, With 11" Wheelhouse Panel
				87	-
	J575 6886	1			1981-82: Left Hand Drive
	J576 3797	1			1983-84: Left Hand Drive
	J576 6575	1			1985-86: Left Hand Drive
	J575 8891	1			1981-82: EXPORT, Left Hand Drive, France Commercial
	J576 3786	1			1983-86: EXPORT, Left Hand Drive, France Commerical
	J575 6893	1			1981-84: EXPORT, Right Hand Drive
	J575 8145	1			1981: EXPORT, Left Hand Drive, Without France Commerical
				88	-
	J575 8568	1			1981-82: Left Hand Drive
	J576 3816	1			1983-86: Left Hand Drive
	J575 8575	1			1981-86: EXPORT, Right Hand Drive
2					PAN, Front Floor
	J575 6128	1		85,86	1981-83
	J575 6105	1		87,88	1981-85: Up to Vin #1JCUF87E5FT161546
	5505 0016	1		87,88	1985-86: Modification Required: After Vin #1JCU87E5FT161546
3					BRACKET, Body
	J545 4152	1			Right
	J545 4151	1			Left
4					COVER, Floor Pan

MODEL CODES

16=Cherokee 2 Dr.(1981-83)	78=Cherokee 4WD-4 Dr.(1984-86)	64=Comanche 2WD-6 Ft. Box(1986)	25=J-10 Truck 7 Ft. Box(1981-84)
17=Cherokee 2 Dr.(1981-83)	85=CJ-5 (1981-83)	66=Comanche 2WD-7 Ft. Box(1986)	26=J10 Truck 8 Ft. Box(1981-86)
73=Cherokee 2WD-2 Dr.(1984-86)	86=CJ-6(1981)	63=Comanche 4WD-6 Ft. Box(1986)	27=J-20 Truck 8 Ft. Box(1981-86)
74=Cherokee 2WD-4 Dr.(1984-86)	87=CJ-7(1981-86)	65=Comanche 4WD-7 Ft. Box(1986)	15=Wagoneer 4 Dr.(1981-83)
18=Cherokee 4 Dr.(1981-83)	88=CJ-8, Scrambler(1981-86)	15=Grand Wagoneer 4 Dr.(1984-86)	75=Wagoneer 4WD-4 Dr.(1984-86)
77=Cherokee 4WD-2 Dr.(1984-86)			

BODY
CJ=CJ-5, CJ-6, CJ-7, CJ-8, Scrambler(1981-86)
MJ=Comanche Pickup(1986)

STYLES
SJ=Wagoneer(1981-83), Grand Wagoneer(1984-86), Cherokee(1981-83), J-10, J-20(1981-86)
XJ=Wagoneer(1984-86), Cherokee(1984-86)

AR = Use as Required - = Non Illustrated Part P.A.R. = Paint as Required

PAN, FLOOR, FRONT AND REAR CJ
Figure 23A-100

81J69 100

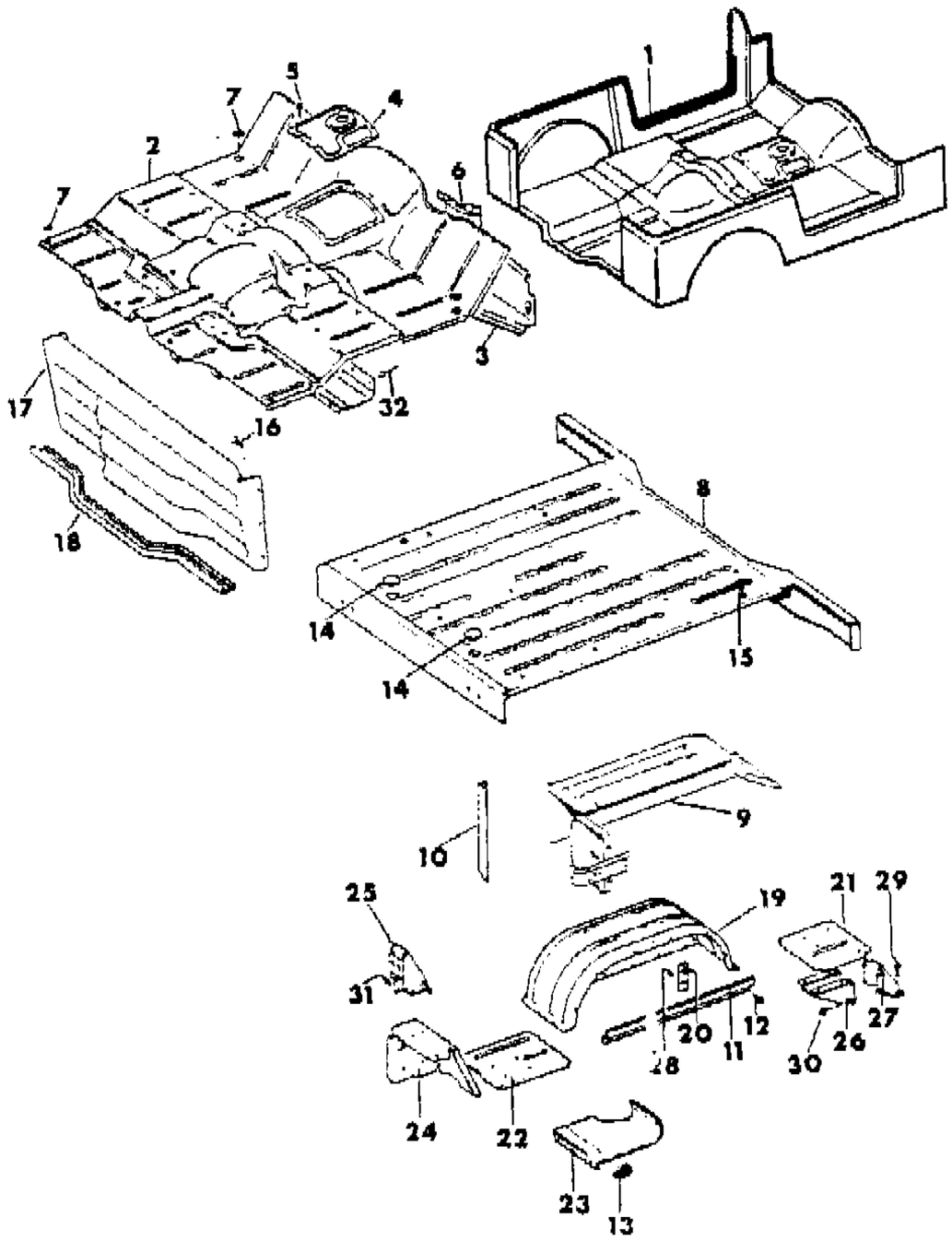

ITEM	PART NUMBER	QTY	BODY	MODEL	DESCRIPTION
					Manual Transmission
					Four Cylinder Engine
	J575 1314	1			1981-86: With Transmission T4 and T5
	J575 8356	1			1982-86: With Transmission T176
	J575 1817	1			1981-85: EXPORT, Isuzu Diesel Engine
					Six Cylinder Engine
	J575 1817	1			With Four Speed Transmission, Without T4
	J575 1816	1			With T4 - Four Speed Transmission
	J575 1816	1		87,88	1981: With Transmission 3239675
	J575 1816	1			1982-83: With Five Speed Transmission
	J575 1817	1			Eight Cylinder Engine, With Five Speed Transmission 5362086
					Automatic Transmission
	J575 1815	1		87,88	1981-86: Left Hand Drive
	J575 2393	1		87,88	1981-86: EXPORT, Right Hand Drive
5	J400 6444	AR			SCREW
6					SHIELD, Heat
	J575 0399	1			Four and Six Cylinder Engine
	J545 7155	1			Eight Cylinder Engine
7	J400 6481	11			PLUG
8					PAN, Rear Floor
				85	With Tailgate
	J813 3142	1			1981-83
				85	With Solid Back Panel
	J813 3143	1			1981-83
	J575 1853	1		86	1981: EXPORT
				87	-
	J813 3129	1			1981: With Reinforcement for Seat Belt Assembly Attachment
	J575 8637	1			1981-84: Without Reinforcement For Seat Belt Assembly Attachment
	J575 6471	1			1985-86
	J575 8892	1			1981-86: France Commercial Without World Cab Japan
	J805 2381	1			1985-86: France Commercial, World Cab
	J805 2380	1			1983-84: World Cab
	9500 0628	1			1985-86: World Cab, Without France Commerical
				88	-
	J575 8824	1			1981-86
	J575 8824	1			1984-85: World Cab
	5501 0657	1			1986: World Cab
	5500 8330	1			1985-86: EXPORT, Without World Cab

MODEL CODES

16=Cherokee 2 Dr.(1981-83)	78=Cherokee 4WD-4 Dr.(1984-86)	64=Comanche 2WD-6 Ft. Box(1986)	25=J-10 Truck 7 Ft. Box(1981-84)
17=Cherokee 2 Dr.(1981-83)	85=CJ-5 (1981-83)	66=Comanche 2WD-7 Ft. Box(1986)	26=J10 Truck 8 Ft. Box(1981-86)
73=Cherokee 2WD-2 Dr.(1984-86)	86=CJ-6(1981)	63=Comanche 4WD-6 Ft. Box(1986)	27=J-20 Truck 8 Ft. Box(1981-86)
74=Cherokee 2WD-4 Dr.(1984-86)	87=CJ-7(1981-86)	65=Comanche 4WD-7 Ft. Box(1986)	15=Wagoneer 4 Dr.(1981-83)
18=Cherokee 4 Dr.(1981-83)	88=CJ-8, Scrambler(1981-86)	15=Grand Wagoneer 4 Dr.(1984-86)	75=Wagoneer 4WD-4 Dr.(1984-86)
77=Cherokee 4WD-2 Dr.(1984-86)			

BODY
CJ=CJ-5, CJ-6, CJ-7, CJ-8, Scrambler(1981-86)
MJ=Comanche Pickup(1986)

STYLES
SJ=Wagoneer(1981-83), Grand Wagoneer(1984-86), Cherokee(1981-83), J-10, J-20(1981-86)
XJ=Wagoneer(1984-86), Cherokee(1984-86)

AR = Use as Required - = Non Illustrated Part P.A.R. = Paint as Required

PAN, FLOOR, FRONT AND REAR CJ
Figure 23A-100

81J69 100

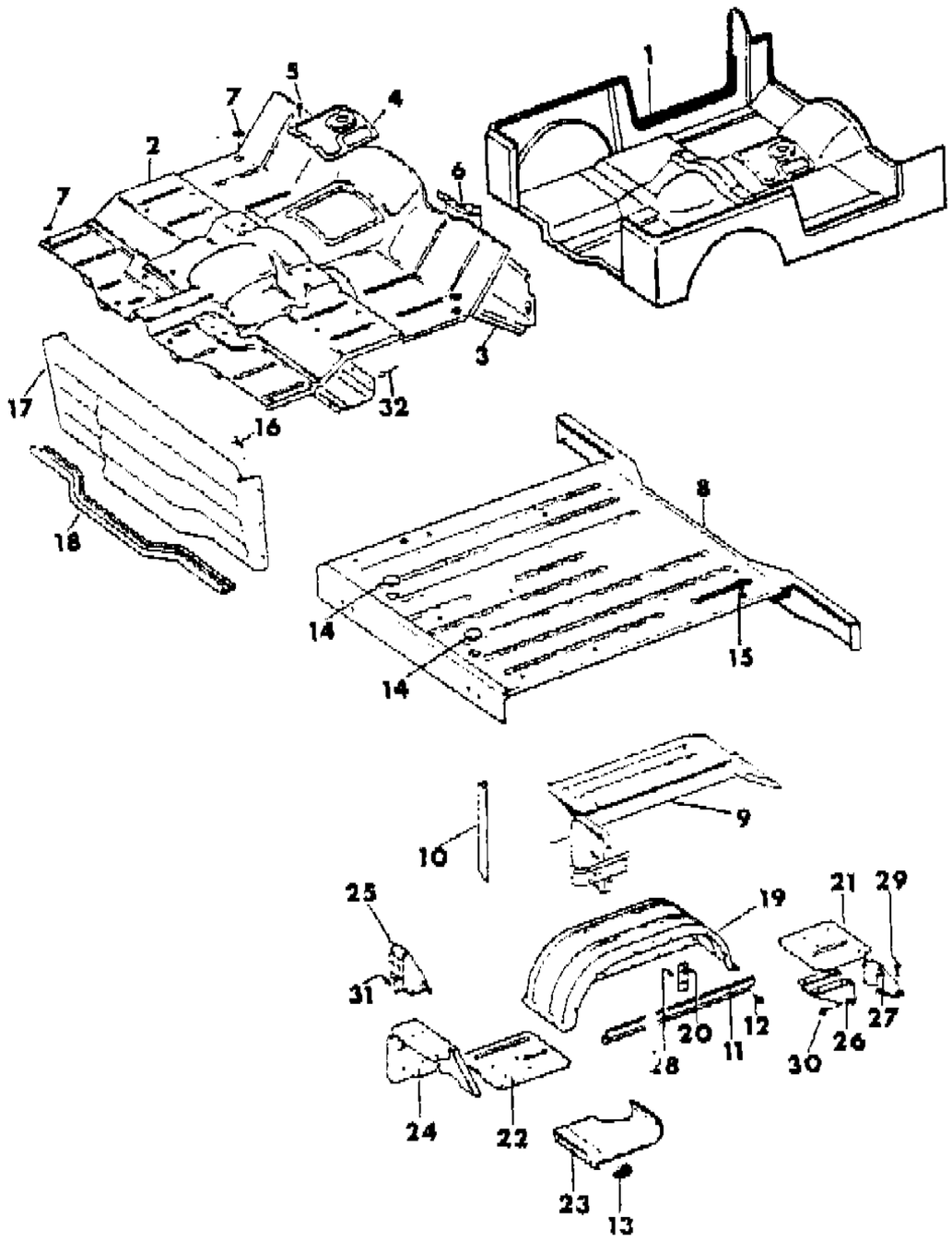

ITEM	PART NUMBER	QTY	BODY	MODEL	DESCRIPTION
9					PANEL, Rear Wheelhouse
				85	With Tailgate
	J546 1304	1			1981-83: Right, With 8" Wheelhouse Panel
	J546 1107	1			1981-83: Left, With 8" Wheelhouse Panel
	J575 7060-1	1			1981-83: With 11" Wheelhouse Panel
				85	With Solid Back Panel
	J575 7062-3	1			1981-83
				86	-
	J546 1324	1			1981: Right, EXPORT, With 8" Wheelhouse Panel
	J546 1115	1			1981: Left, EXPORT, With 8" Wheelhouse Panel
	J546 2396-7	1			1981: EXPORT, With 11" Wheelhouse Panel
				87	-
	J813 0704-5	1			1981-84
	J576 5370-1	1			1985-86
					1985-86: World Cab
	J575 1784	1			Right
	J813 0705	1			Left
10				85,86	REINFORCEMENT, With Tailgate
	J546 1110	1			Right
	J546 1109	1			Left
11					RETAINER, Harness
	J096 1477	2		85,86	1981-83
	J575 8729	1		87	1981: Lower
	J576 0997	1		87	1982-86: Lower
	J575 8728	1		87	1981-86: Upper
	J575 8688	1		88	1981
	J575 8729	1		88	1982-86
12	S016 1857	4			SCREW
13	J400 4919	12			FASTENER
14	J400 7054	2			PLUG
15	5500 6578	2			PLUG
16	J400 5982	13		88	SCREW
17	J575 8677	1		88	PANEL
18	J576 2612	1		88	WEATHERSEAL ***
19	J575 8288	2		88	PANEL, Wheelhouse
20	5500 7760	2		88	REINFORCEMENT, EXPORT Without World Cab
21	J575 6742-3	1		88	FILLER, Front
22	J575 6744-5	1		88	FILLER, Rear
23	J575 8744-5	1		88	SHIELD, Splash

MODEL CODES

16=Cherokee 2 Dr.(1981-83)
17=Cherokee 2 Dr.(1981-83)
73=Cherokee 2WD-2 Dr.(1984-86)
74=Cherokee 2WD-4 Dr.(1984-86)
18=Cherokee 4 Dr.(1981-83)
77=Cherokee 4WD-2 Dr.(1984-86)
78=Cherokee 4WD-4 Dr.(1984-86)
85=CJ-5 (1981-83)
86=CJ-6(1981)
87=CJ-7(1981-86)
88=CJ-8, Scrambler(1981-86)
64=Comanche 2WD-6 Ft. Box(1986)
66=Comanche 2WD-7 Ft. Box(1986)
63=Comanche 4WD-6 Ft. Box(1986)
65=Comanche 4WD-7 Ft. Box(1986)
15=Grand Wagoneer 4 Dr.(1984-86)
25=J-10 Truck 7 Ft. Box(1981-84)
26=J10 Truck 8 Ft. Box(1981-86)
27=J-20 Truck 8 Ft. Box(1981-86)
15=Wagoneer 4 Dr.(1981-83)
75=Wagoneer 4WD-4 Dr.(1984-86)

BODY
CJ=CJ-5, CJ-6, CJ-7, CJ-8, Scrambler(1981-86)
MJ=Comanche Pickup(1986)

STYLES
SJ=Wagoneer(1981-83), Grand Wagoneer(1984-86), Cherokee(1981-83), J-10, J-20(1981-86)
XJ=Wagoneer(1984-86), Cherokee(1984-86)

AR = Use as Required - = Non Illustrated Part P.A.R. = Paint as Required

PAN, FLOOR, FRONT AND REAR CJ
Figure 23A-100

81J69 100

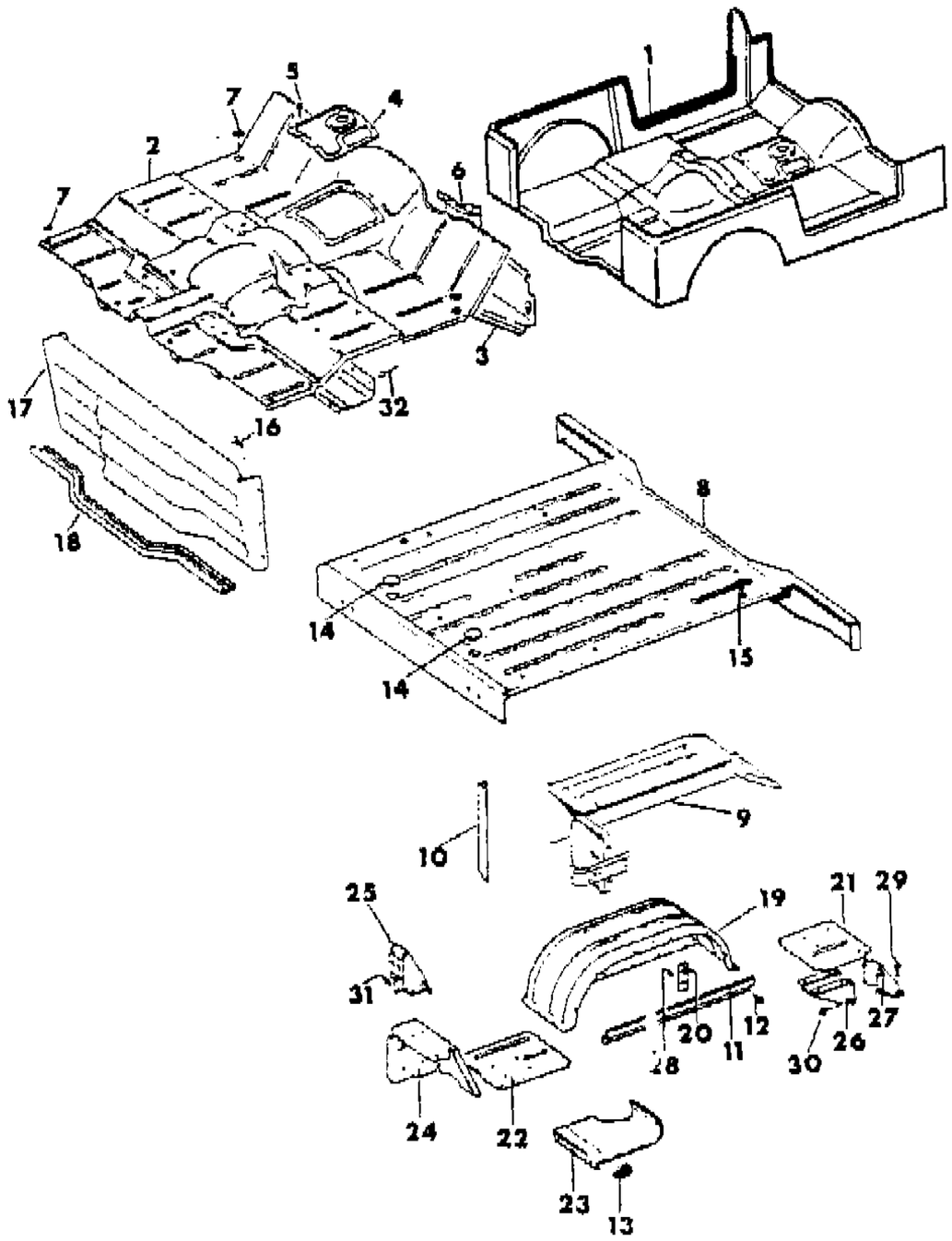

ITEM	PART NUMBER	QTY	BODY	MODEL	DESCRIPTION
24	J575 8722-3	1		88	PANEL, Rear
25				88	REINFORCEMENT
	J575 8814	1			Right
	J575 8813	1			Left
26	J575 8622	1		88	GUSSET, Lower
27	J575 8775	1		88	GUSSET, Inner
28	3420 1778	4		88	RIVET, EXPORT, Without World Cab
29	J400 6194	4		88	SCREW
30	S941 1507	8		88	NUT
31	J400 6887	6		88	BOLT
32	J400 4822	12		88	RIVET

MODEL CODES

16=Cherokee 2 Dr.(1981-83)
17=Cherokee 2 Dr.(1981-83)
73=Cherokee 2WD-2 Dr.(1984-86)
74=Cherokee 2WD-4 Dr.(1984-86)
18=Cherokee 4 Dr.(1981-83)
77=Cherokee 4WD-2 Dr.(1984-86)
78=Cherokee 4WD-4 Dr.(1984-86)
85=CJ-5 (1981-83)
86=CJ-6(1981)
87=CJ-7(1981-86)
88=CJ-8, Scrambler(1981-86)
64=Comanche 2WD-6 Ft. Box(1986)
66=Comanche 2WD-7 Ft. Box(1986)
63=Comanche 4WD-6 Ft. Box(1986)
65=Comanche 4WD-7 Ft. Box(1986)
15=Grand Wagoneer 4 Dr.(1984-86)
25=J-10 Truck 7 Ft. Box(1981-84)
26=J10 Truck 8 Ft. Box(1981-86)
27=J-20 Truck 8 Ft. Box(1981-86)
15=Wagoneer 4 Dr.(1981-83)
75=Wagoneer 4WD-4 Dr.(1984-86)

BODY
CJ=CJ-5, CJ-6, CJ-7, CJ-8, Scrambler(1981-86)
MJ=Comanche Pickup(1986)

STYLES
SJ=Wagoneer(1981-83), Grand Wagoneer(1984-86), Cherokee(1981-83), J-10, J-20(1981-86)
XJ=Wagoneer(1984-86), Cherokee(1984-86)

AR = Use as Required - = Non Illustrated Part P.A.R. = Paint as Required

« RETURN TO GROUP INDEX

FENDERS, FRONT CJ
Figure 23A-200

81J69 200

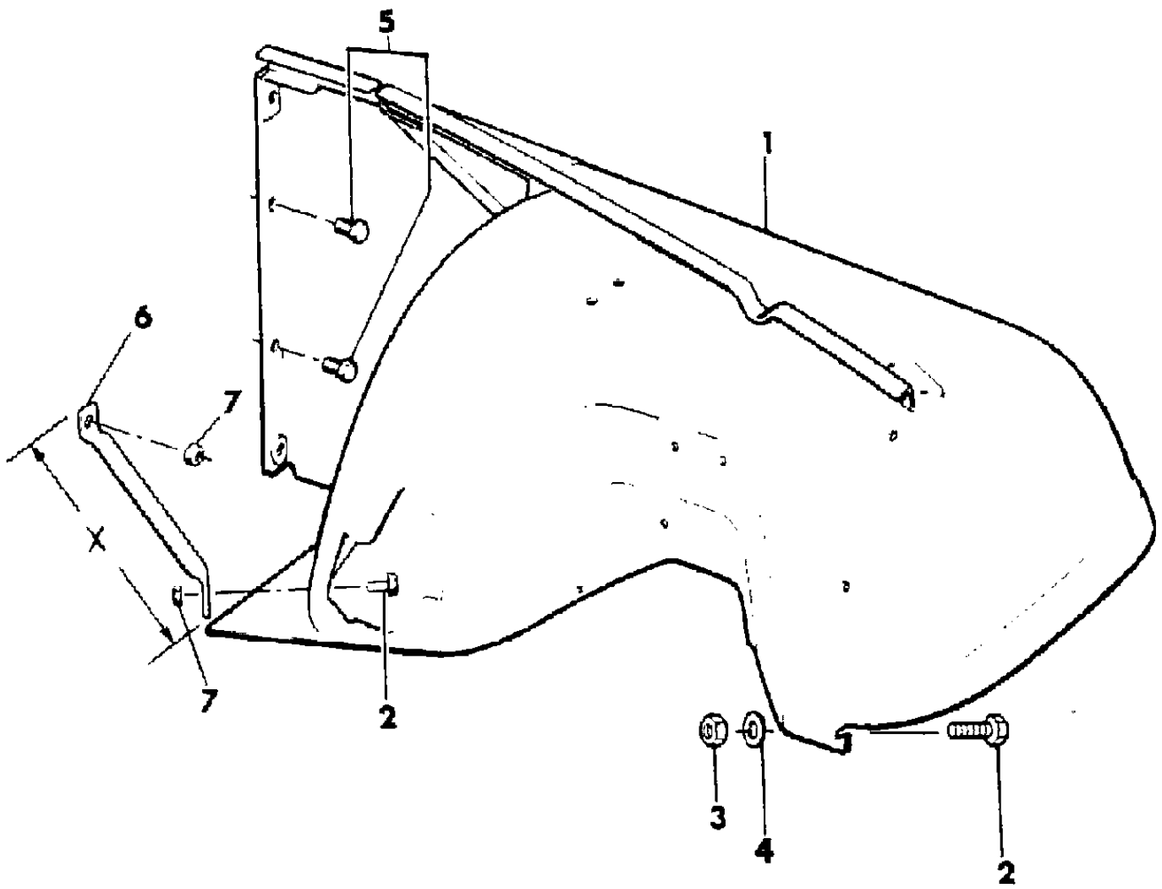

ITEM	PART NUMBER	QTY	BODY	MODEL	DESCRIPTION
1					FENDER
	J813 3094	1			1981: Right
	J575 8618	1			1981: Left
	J575 8696-7	1		87	1981: France
	J575 8964-5	1			1982-83: Without holes for Fender Extension, Modification to the Splash Apron is required on Models prior to 1982
	J576 3566-7	1		87	1982-85: Japan
	J575 8968-9	1		87	1982-86: Economic Commission of Europe, France
	J576 4630	1			1983-86: Right, With holes for Fender Extension, Modification to the Splash Apron is required on Models prior to 1982
	J576 4629	1			1983-86: Left, With holes for Fender Extension, Modification to the Splash Apron is required on Models prior to 1982
	J575 8964-5	1		88	1984-85: EXPORT
2	J400 4455	AR			SCREW
3	J012 0376	4			NUT
4	S044 6363	4			WASHER
5					SCREW
	J400 4455	8			1981
	J400 5095	8			1982-86
6					SUPPORT
	J098 7380-1	1			13" long
	J545 9388	1			Right, 10.5" long
	J545 9387	1			Left, 10.5" long
7					NUT
	J400 4866	AR			1981
	J012 0376	AR			1982-86

MODEL CODES

16=Cherokee 2 Dr.(1981-83)	78=Cherokee 4WD-4 Dr.(1984-86)	64=Comanche 2WD-6 Ft. Box(1986)	25=J-10 Truck 7 Ft. Box(1981-84)
17=Cherokee 2 Dr.(1981-83)	85=CJ-5 (1981-83)	66=Comanche 2WD-7 Ft. Box(1986)	26=J10 Truck 8 Ft. Box(1981-86)
73=Cherokee 2WD-2 Dr.(1984-86)	86=CJ-6(1981)	63=Comanche 4WD-6 Ft. Box(1986)	27=J-20 Truck 8 Ft. Box(1981-86)
74=Cherokee 2WD-4 Dr.(1984-86)	87=CJ-7(1981-86)	65=Comanche 4WD-7 Ft. Box(1986)	15=Wagoneer 4 Dr.(1981-83)
18=Cherokee 4 Dr.(1981-83)	88=CJ-8, Scrambler(1981-86)	15=Grand Wagoneer 4 Dr.(1984-86)	75=Wagoneer 4WD-4 Dr.(1984-86)
77=Cherokee 4WD-2 Dr.(1984-86)			

BODY
CJ=CJ-5, CJ-6, CJ-7, CJ-8, Scrambler(1981-86)
MJ=Comanche Pickup(1986)

STYLES
SJ=Wagoneer(1981-83), Grand Wagoneer(1984-86), Cherokee(1981-83), J-10, J-20(1981-86)
XJ=Wagoneer(1984-86), Cherokee(1984-86)

AR = Use as Required - = Non Illustrated Part P.A.R. = Paint as Required

« RETURN TO GROUP INDEX

HOOD, LOCK AND CATCHES CJ
Figure 23A-300

81J69 300

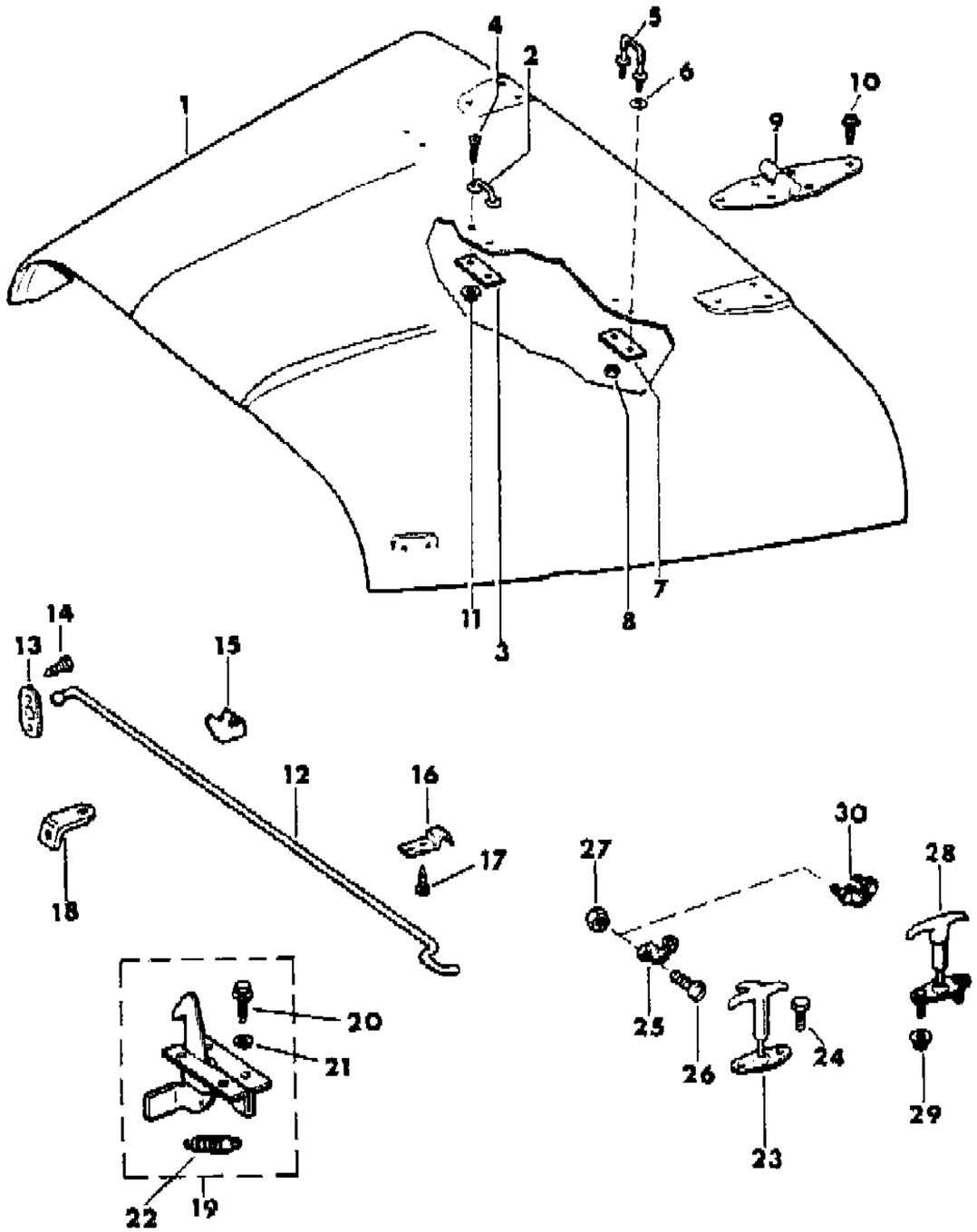

ITEM	PART NUMBER	QTY	BODY	MODEL	DESCRIPTION
1					HOOD
	J098 6220	1			1981
	J576 1180	1			1982-86
2					LOOP, Footman
	J545 5264	1			1981-82: Without Vinyl Coating
	J576 2601	1			1982-85: With Vinyl Coating
	J576 6802	1			1985-86
3	J545 5265	1			REINFORCEMENT
4					SCREW
	J400 6437	2			FLat Head
	J400 7088	2			Oval Head
5					BUMPER
	J575 2339	2			Chrome
	J097 9210	2			Vinyl coated on upper portion of U-Bolt
	J813 4315	2			Vinyl coated up to threads of U-Bolt
6	J096 1078	4			WASHER
7	J813 3111	2			REINFORCEMENT
8	J027 1172	4			NUT
9	J545 9516	2			HINGE, Hood
10	J400 4455	10			SCREW
11	J027 1166	2			NUT
12	J097 9722	1			ROD
13	J097 9727	1			BRACKET, Hood Prop Rod
14	J045 6334	2			SCREW
15	J097 9725	1			BRACKET
16	J093 9305	1			RETAINER
17	S016 1860	2			SCREW
18	J097 3857	1			BRACKET
19	J575 2530	1			LOCK ASSEMBLY, Hood
20	J098 7145	AR			SCREW
21	J096 1078	AR			WASHER
22	J097 8984	1			SPRING
23					CATCH
	J575 1191	2			1981-84 ***
	J576 2325	2			1981-84: EXPORT, Economic Commission of Europe, Japan ***
24	J096 8651	4			BOLT: 1981-84 ***
25	J575 1190	2			BRACKET: 1981-84 ***
26	S016 0515	4			BOLT: 1981-84 ***
27	J027 1172	4			NUT:1981-84 ***

MODEL CODES

16=Cherokee 2 Dr.(1981-83)
17=Cherokee 2 Dr.(1981-83)
73=Cherokee 2WD-2 Dr.(1984-86)
74=Cherokee 2WD-4 Dr.(1984-86)
18=Cherokee 4 Dr.(1981-83)
77=Cherokee 4WD-2 Dr.(1984-86)
78=Cherokee 4WD-4 Dr.(1984-86)
85=CJ-5 (1981-83)
86=CJ-6(1981)
87=CJ-7(1981-86)
88=CJ-8, Scrambler(1981-86)
64=Comanche 2WD-6 Ft. Box(1986)
66=Comanche 2WD-7 Ft. Box(1986)
63=Comanche 4WD-6 Ft. Box(1986)
65=Comanche 4WD-7 Ft. Box(1986)
15=Grand Wagoneer 4 Dr.(1984-86)
25=J-10 Truck 7 Ft. Box(1981-84)
26=J10 Truck 8 Ft. Box(1981-86)
27=J-20 Truck 8 Ft. Box(1981-86)
15=Wagoneer 4 Dr.(1981-83)
75=Wagoneer 4WD-4 Dr.(1984-86)

BODY
CJ=CJ-5, CJ-6, CJ-7, CJ-8, Scrambler(1981-86)
MJ=Comanche Pickup(1986)

STYLES
SJ=Wagoneer(1981-83), Grand Wagoneer(1984-86), Cherokee(1981-83), J-10, J-20(1981-86)
XJ=Wagoneer(1984-86), Cherokee(1984-86)

AR = Use as Required - = Non Illustrated Part P.A.R. = Paint as Required

« RETURN TO GROUP INDEX »

HOOD, LOCK AND CATCHES CJ
Figure 23A-300

81J69 300

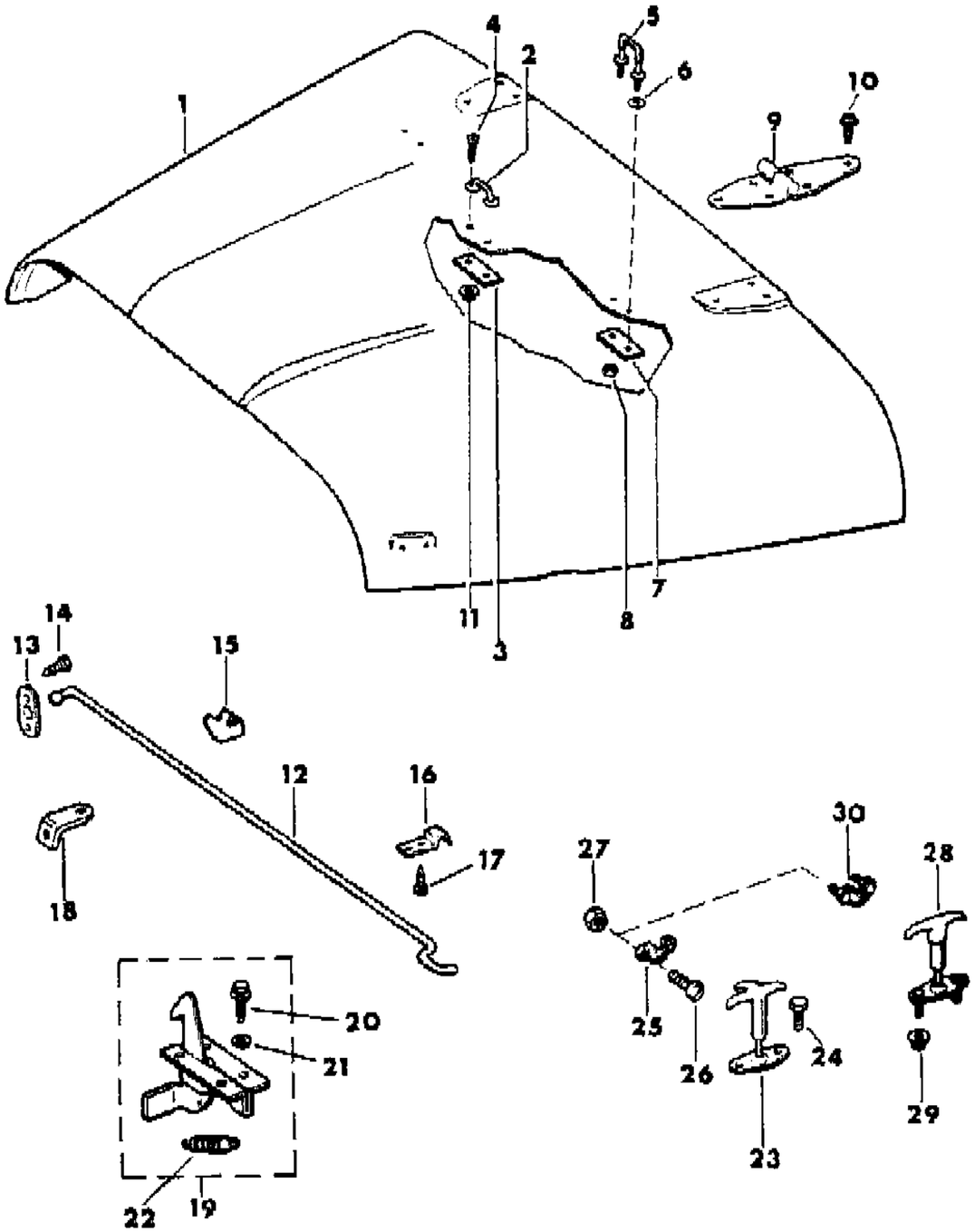

ITEM	PART NUMBER	QTY	BODY	MODEL	DESCRIPTION
28		2			CATCH: 1985-86 ***
	J576 6762				
	J576 6763				Export
29	J400 4588	4			NUT:1985-86 ***
30	J576 6775	2			BRACKET:1985-86 ***

MODEL CODES

16=Cherokee 2 Dr.(1981-83)
17=Cherokee 2 Dr.(1981-83)
73=Cherokee 2WD-2 Dr.(1984-86)
74=Cherokee 2WD-4 Dr.(1984-86)
18=Cherokee 4 Dr.(1981-83)
77=Cherokee 4WD-2 Dr.(1984-86)
78=Cherokee 4WD-4 Dr.(1984-86)
85=CJ-5 (1981-83)
86=CJ-6(1981)
87=CJ-7(1981-86)
88=CJ-8, Scrambler(1981-86)
64=Comanche 2WD-6 Ft. Box(1986)
66=Comanche 2WD-7 Ft. Box(1986)
63=Comanche 4WD-6 Ft. Box(1986)
65=Comanche 4WD-7 Ft. Box(1986)
15=Grand Wagoneer 4 Dr.(1984-86)
25=J-10 Truck 7 Ft. Box(1981-84)
26=J10 Truck 8 Ft. Box(1981-86)
27=J-20 Truck 8 Ft. Box(1981-86)
15=Wagoneer 4 Dr.(1981-83)
75=Wagoneer 4WD-4 Dr.(1984-86)

BODY
CJ=CJ-5, CJ-6, CJ-7, CJ-8, Scrambler(1981-86)
MJ=Comanche Pickup(1986)

STYLES
SJ=Wagoneer(1981-83), Grand Wagoneer(1984-86), Cherokee(1981-83), J-10, J-20(1981-86)
XJ=Wagoneer(1984-86), Cherokee(1984-86)

AR = Use as Required - = Non Illustrated Part P.A.R. = Paint as Required

« RETURN TO GROUP INDEX

WINDSHIELD FRAME AND HINGES PANEL, DASH CJ
Figure 23A-400

81J69 400

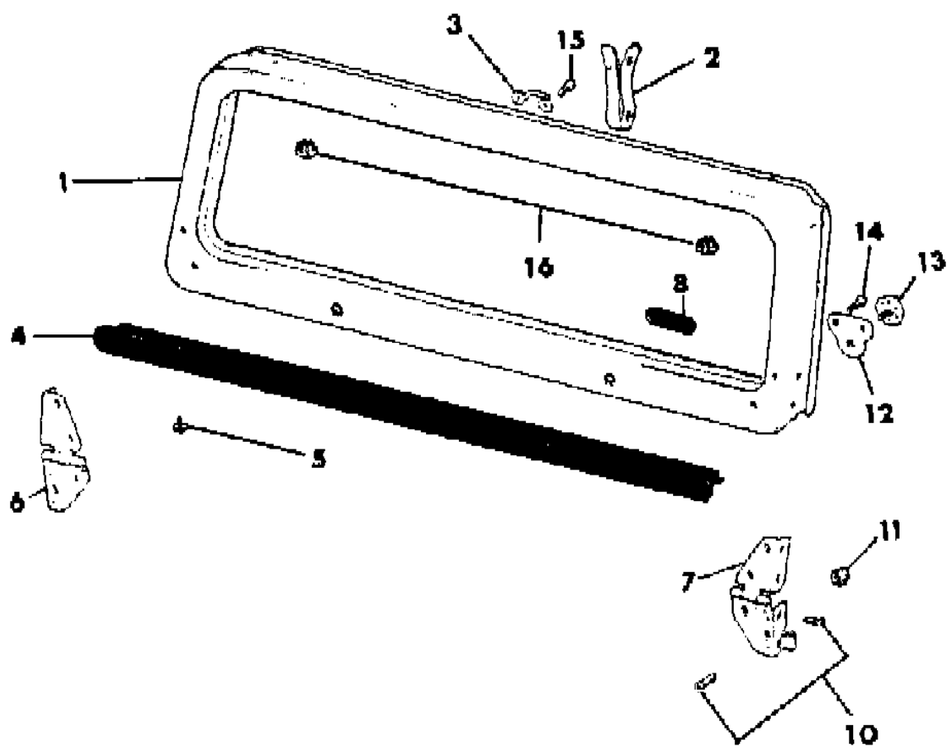

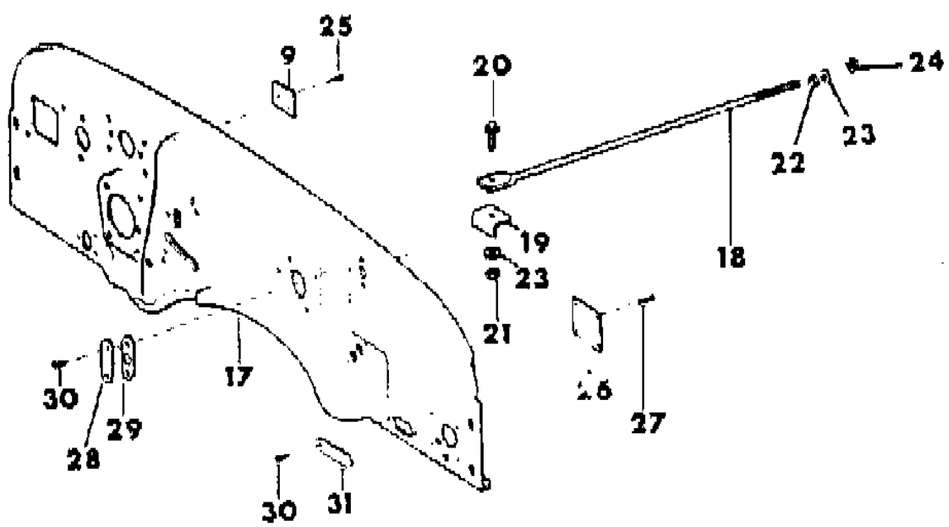

ITEM	PART NUMBER	QTY	BODY	MODEL	DESCRIPTION
1					FRAME, Windshield
	J575 8971	1			1981-86
	J805 2278	1			1982-86: With World Cab EXPORT
2	J545 8890	2			STRAP, Windshield
3					LOOP, Footman
	J069 1580	1			1981-85: Chrome
	5501 3667	1			1986: Chrome
	J066 3808	1			1981-85: Painted
	5501 3666	1			1986: Silver
4					SEAL, Windshield to Cowl
	J545 3950	1			1981-86
	J545 9816	1			1981-82: With Meyer Metal Cab
5	J400 4171	9			SCREW, With Meyer Metal Cab
6-7					HINGE, Windshield and Door
	J546 2424-5	1			1981-86: Without Metal Cab and Limited, Outside mirror is mounted to this hinge
	J576 1944-5	1			1982-83: Limited, Outside mirror is mounted to door panel
	J575 8880-1	1			1982-86: With World Cab EXPORT, Economic Commission of Europe, Japan
	J546 2426-7	1			1981-82: With Meyer Metal Cab
8	J545 9153	2			COVER, Access
9					COVER
	J545 9147	1			Left Hand Drive, With Automatic Transmission, or Four Cylinder Engine
	J575 2357	1			Right Hand Drive, With Automatic Transmission, EXPORT
10	J400 4956	16			SCREW
11	J400 1457	8			NUT
12					BRACKET, Windshield Hold Down
	J545 3945	2			1981-86
	J545 4647	2			1981-82: With Meyer Metal Cab
13	J545 7045	2			KNOB
14	J400 7220	4			SCREW
15	J400 4995	2			SCREW
16	J043 2453	2			PLUG
17					PANEL, Dash
	J575 1849	1			1981-82: Left Hand Drive, Modification Required
	J576 3510	1			1983-84: Left Hand Drive, Modification Required
	5505 2582	1			1985-86: Left Hand Drive, Up to Vin #1JCUF87E5FT161546
	8350 2764	1			1985-86: Left Hand Drive, After Vin #1JCUF87E5FT161546

MODEL CODES
16=Cherokee 2 Dr.(1981-83)
17=Cherokee 2 Dr.(1981-83)
73=Cherokee 2WD-2 Dr.(1984-86)
74=Cherokee 2WD-4 Dr.(1984-86)
18=Cherokee 4 Dr.(1981-83)
77=Cherokee 4WD-2 Dr.(1984-86)
78=Cherokee 4WD-4 Dr.(1984-86)
85=CJ-5 (1981-83)
86=CJ-6(1981)
87=CJ-7(1981-86)
88=CJ-8, Scrambler(1981-86)
64=Comanche 2WD-6 Ft. Box(1986)
66=Comanche 2WD-7 Ft. Box(1986)
63=Comanche 4WD-6 Ft. Box(1986)
65=Comanche 4WD-7 Ft. Box(1986)
15=Grand Wagoneer 4 Dr.(1984-86)
25=J-10 Truck 7 Ft. Box(1981-84)
26=J10 Truck 8 Ft. Box(1981-86)
27=J-20 Truck 8 Ft. Box(1981-86)
15=Wagoneer 4 Dr.(1981-83)
75=Wagoneer 4WD-4 Dr.(1984-86)

BODY
CJ=CJ-5, CJ-6, CJ-7, CJ-8, Scrambler(1981-86)
MJ=Comanche Pickup(1986)

STYLES
SJ=Wagoneer(1981-83), Grand Wagoneer(1984-86), Cherokee(1981-83), J-10, J-20(1981-86)
XJ=Wagoneer(1984-86), Cherokee(1984-86)

AR = Use as Required - = Non Illustrated Part P.A.R. = Paint as Required

« RETURN TO GROUP INDEX »

WINDSHIELD FRAME AND HINGES PANEL, DASH CJ
Figure 23A-400

81J69 400

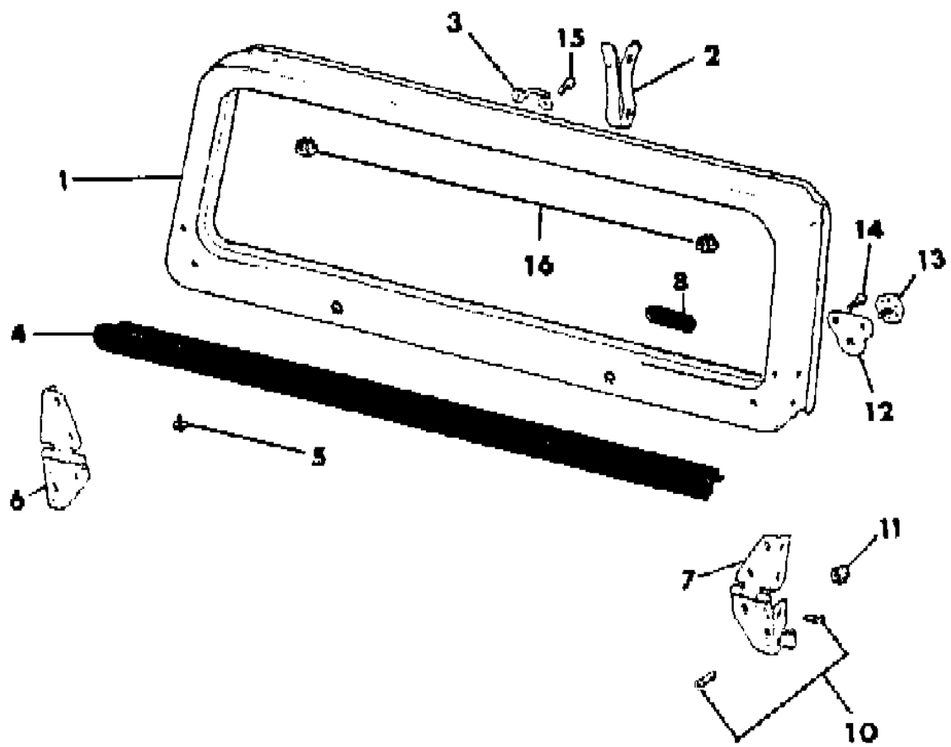

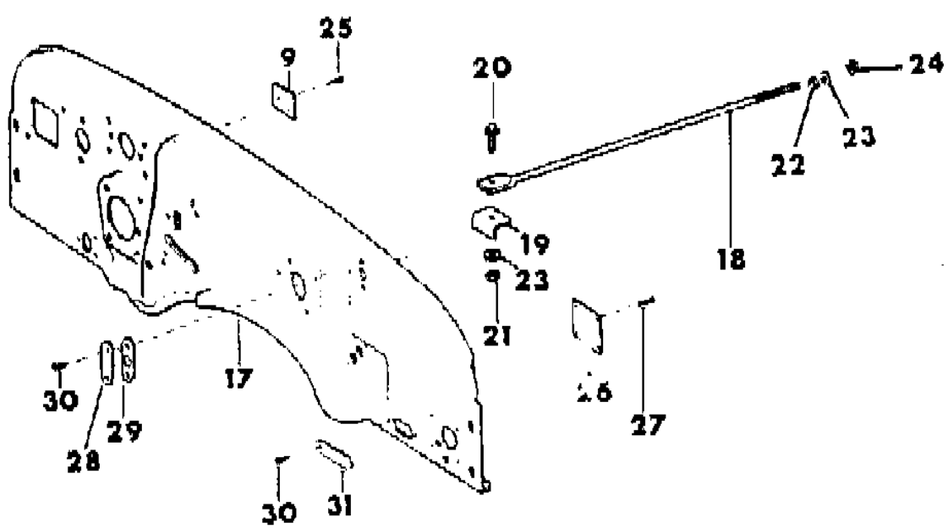

ITEM	PART NUMBER	QTY	BODY	MODEL	DESCRIPTION
	J575 2681	1			1981-84: Right Hand Drive, EXPORT
	5505 2583	1			1985-86: Right Hand Drive, EXPORT, Up to Vin #1JCUF87E5FT161546
	8350 2765	1			1985-86: Right Hand Drive, EXPORT, After Vin #1JCUF87E5FT161546
18					ROD
	J098 7122	2			1981-82
	J098 7122	1			1983-86: Right
	J576 4055	1			1983-86: Left
19	J098 7066	2			BRACKET
20	J080 8319	2			BOLT
21	J012 0368	2			NUT
22	J400 6681	2			NUT
23	J012 0394	4			WASHER
24	J012 0369	2			NUT, Hex
25	S106 3210	3			SCREW
26	J546 2728	1			COVER
27	J097 4764	4			SCREW
28	J576 3520	1			COVER
29	5603 0167	1			GASKET
30	J448 9487	3			SCREW
31	J545 3638	1			COVER

MODEL CODES

16=Cherokee 2 Dr.(1981-83)
17=Cherokee 2 Dr.(1981-83)
73=Cherokee 2WD-2 Dr.(1984-86)
74=Cherokee 2WD-4 Dr.(1984-86)
18=Cherokee 4 Dr.(1981-83)
77=Cherokee 4WD-2 Dr.(1984-86)
78=Cherokee 4WD-4 Dr.(1984-86)
85=CJ-5 (1981-83)
86=CJ-6(1981)
87=CJ-7(1981-86)
88=CJ-8, Scrambler(1981-86)
64=Comanche 2WD-6 Ft. Box(1986)
66=Comanche 2WD-7 Ft. Box(1986)
63=Comanche 4WD-6 Ft. Box(1986)
65=Comanche 4WD-7 Ft. Box(1986)
15=Grand Wagoneer 4 Dr.(1984-86)
25=J-10 Truck 7 Ft. Box(1981-84)
26=J10 Truck 8 Ft. Box(1981-86)
27=J-20 Truck 8 Ft. Box(1981-86)
15=Wagoneer 4 Dr.(1981-83)
75=Wagoneer 4WD-4 Dr.(1984-86)

BODY
CJ=CJ-5, CJ-6, CJ-7, CJ-8, Scrambler(1981-86)
MJ=Comanche Pickup(1986)

STYLES
SJ=Wagoneer(1981-83), Grand Wagoneer(1984-86), Cherokee(1981-83), J-10, J-20(1981-86)
XJ=Wagoneer(1984-86), Cherokee(1984-86)

AR = Use as Required - = Non Illustrated Part P.A.R. = Paint as Required

« RETURN TO GROUP INDEX

GLASS, MIRROR, INSIDE REAR VIEW LESS WORLD CAB CJ
Figure 23A-500

81J69 500

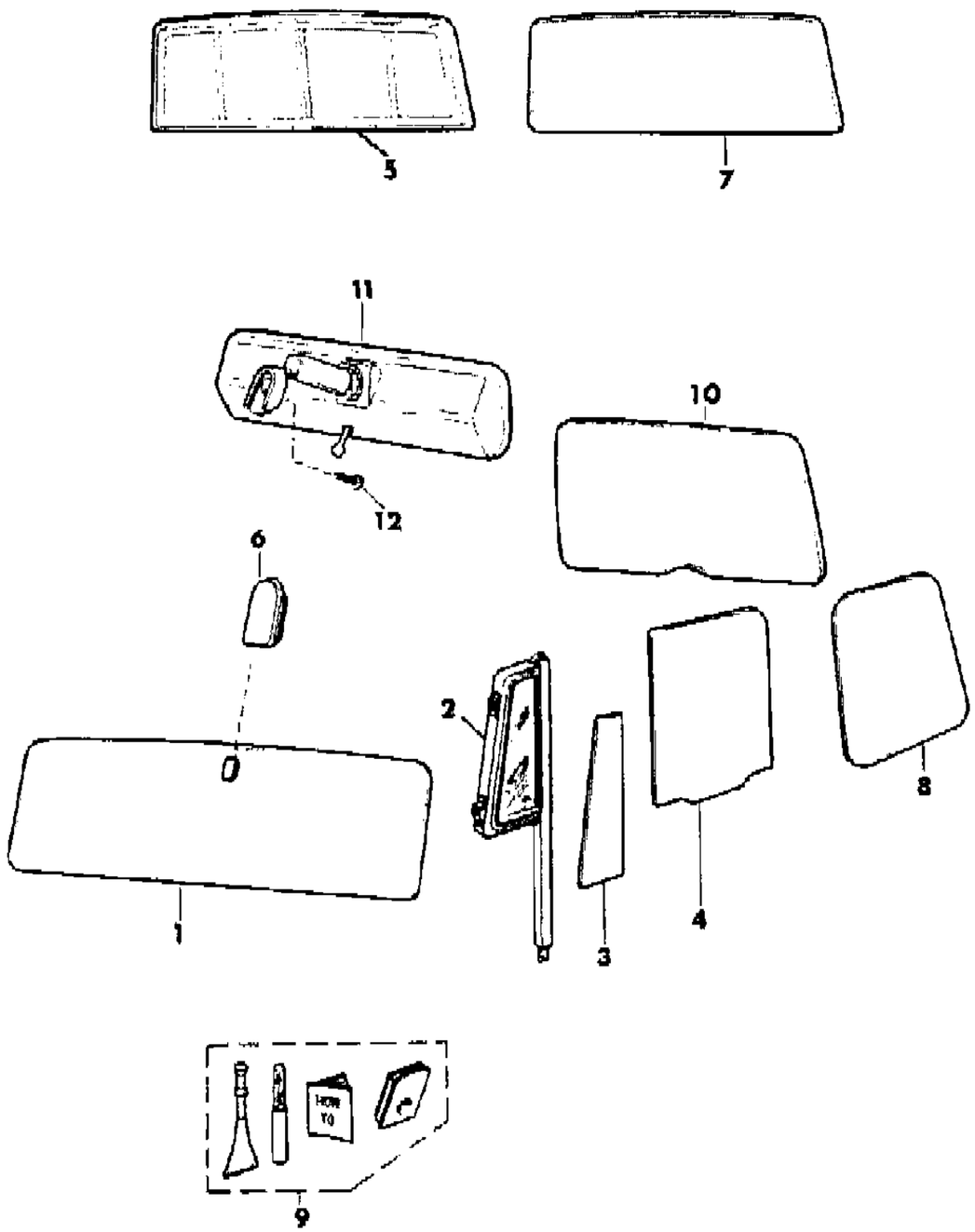

ITEM	PART NUMBER	QTY	BODY	MODEL	DESCRIPTION
1					GLASS, Windshield
	J545 3847	1			Clear, US, CANADA
	J575 6180	1			Clear, Economic Commission of Europe
	J575 8372	1			Tinted, Economic Commission of Europe, EXPORT
2	J576 2326-7	1			VENT, Pivoting, 1983-86
3					GLASS, Fixed
	J545 3880	1			1982-82: Right US, CANADA
	J545 3879	1			1981-82: Left, US, CANADA
	J575 6132-3	1			1981-82: EXPORT
4					GLASS, Door
	J545 3882	1			Right, US, CANADA
	J545 3881	1			Left, US, CANADA
	J575 6184-5	1			EXPORT
5	J576 2383	1		88	GLASS, Sliding, Clear
6	J365 7374	1			SUPPORT, Inside Rear View Mirror Mounting - The Mirror Support is replacing Mirror Mounting Kit. When installing a Mirror support, use Locktite #312 Adhesive and the Accelerator for Locktite Adhesive #312.
7					GLASS, Rear Window
	J575 8547	1		88	1981-83: Clear, Up to Vin #048957 Built approx. 4-1-83
	J575 3687	1		88	1983-86: Clear, After Vin #048957 Built Approx. 4-1-83.
	J575 8762	1		88	1981-83: Clear, Economic Commission of Europe, EXPORT, Up to Vin #048957 built approx. 4-1-83
	J576 3688	1		88	1983-86: Clear, Economic Commission of Europe, EXPORT, After Vin # 048957 Built approx. 4-1-83
8					GLASS, Quarter
	J545 3877	2		87	Clear, US, CANADA
	J546 5079	2		87	Bronze, US, CANADA
	J575 1180	2		87	Grey, US, CANADA
	J575 8116	2		87	EXPORT
9	J813 3768	1			MOUNTING PACKAGE, Mirror, EXPORT ***
10					GLASS, Lift Door
	J097 0643	1		87	Clear, US, CANADA
	J546 5080	1		87	Bronze, US, CANADA
	J575 1181	1		87	Grey, US, CANADA
	J575 6701	1		87	EXPORT
11					MIRROR, Inside Rear View
	5500 9784	1			US, CANADA
	J575 6124	1			EXPORT

MODEL CODES

16=Cherokee 2 Dr.(1981-83)
17=Cherokee 2 Dr.(1981-83)
73=Cherokee 2WD-2 Dr.(1984-86)
74=Cherokee 2WD-4 Dr.(1984-86)
18=Cherokee 4 Dr.(1981-83)
77=Cherokee 4WD-2 Dr.(1984-86)
78=Cherokee 4WD-4 Dr.(1984-86)
85=CJ-5 (1981-83)
86=CJ-6(1981)
87=CJ-7(1981-86)
88=CJ-8, Scrambler(1981-86)
64=Comanche 2WD-6 Ft. Box(1986)
66=Comanche 2WD-7 Ft. Box(1986)
63=Comanche 4WD-6 Ft. Box(1986)
65=Comanche 4WD-7 Ft. Box(1986)
15=Grand Wagoneer 4 Dr.(1984-86)
25=J-10 Truck 7 Ft. Box(1981-84)
26=J10 Truck 8 Ft. Box(1981-86)
27=J-20 Truck 8 Ft. Box(1981-86)
15=Wagoneer 4 Dr.(1981-83)
75=Wagoneer 4WD-4 Dr.(1984-86)

BODY
CJ=CJ-5, CJ-6, CJ-7, CJ-8, Scrambler(1981-86)
MJ=Comanche Pickup(1986)

STYLES
SJ=Wagoneer(1981-83), Grand Wagoneer(1984-86), Cherokee(1981-83), J-10, J-20(1981-86)
XJ=Wagoneer(1984-86), Cherokee(1984-86)

AR = Use as Required - = Non Illustrated Part P.A.R. = Paint as Required

« RETURN TO GROUP INDEX »

GLASS, MIRROR, INSIDE REAR VIEW LESS WORLD CAB CJ
Figure 23A-500

81J69 500

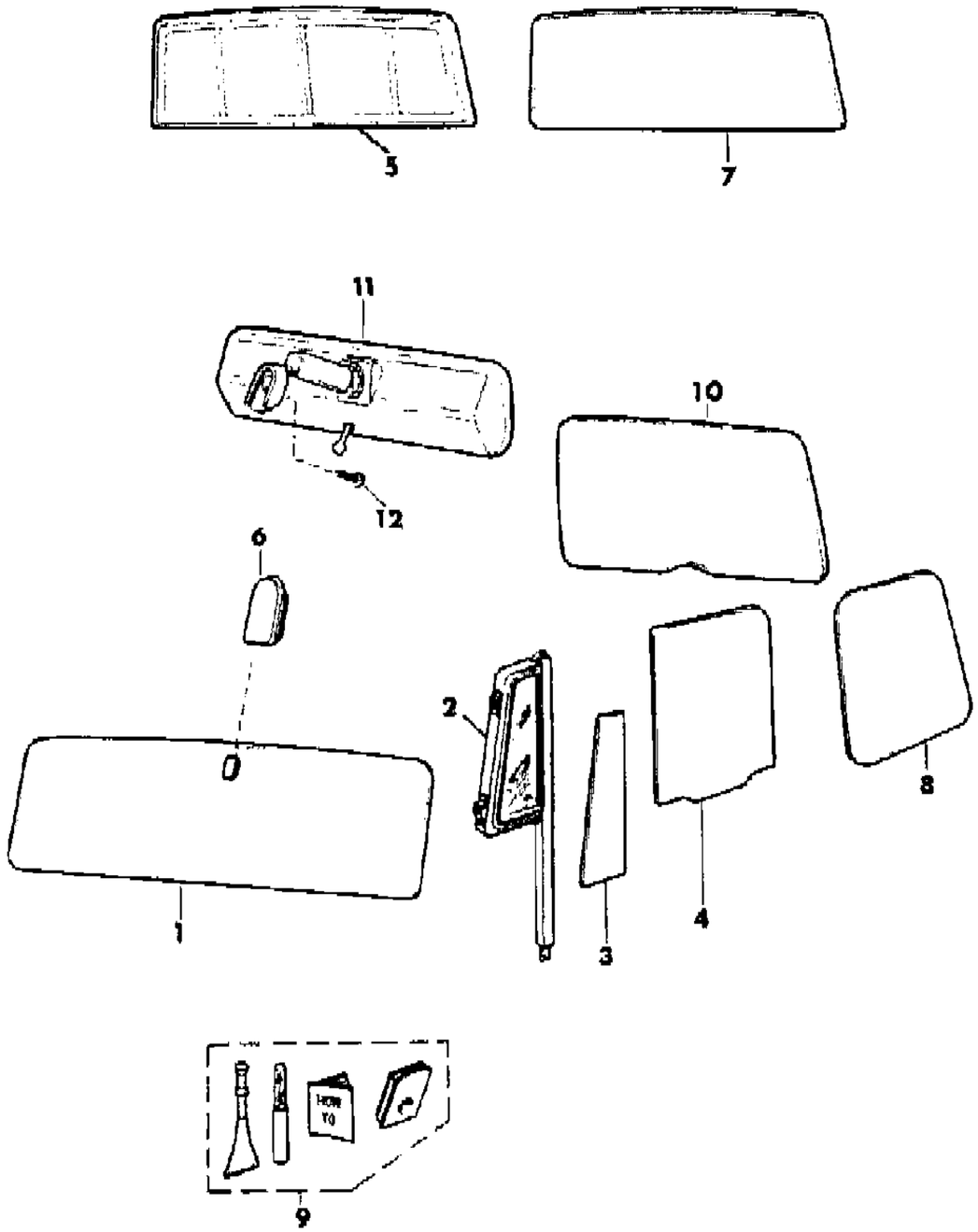

ITEM	PART NUMBER	QTY	BODY	MODEL	DESCRIPTION
12	J400 5766	1			SCREW

MODEL CODES

16=Cherokee 2 Dr.(1981-83)	78=Cherokee 4WD-4 Dr.(1984-86)	64=Comanche 2WD-6 Ft. Box(1986)	25=J-10 Truck 7 Ft. Box(1981-84)
17=Cherokee 2 Dr.(1981-83)	85=CJ-5 (1981-83)	66=Comanche 2WD-7 Ft. Box(1986)	26=J10 Truck 8 Ft. Box(1981-86)
73=Cherokee 2WD-2 Dr.(1984-86)	86=CJ-6(1981)	63=Comanche 4WD-6 Ft. Box(1986)	27=J-20 Truck 8 Ft. Box(1981-86)
74=Cherokee 2WD-4 Dr.(1984-86)	87=CJ-7(1981-86)	65=Comanche 4WD-7 Ft. Box(1986)	15=Wagoneer 4 Dr.(1981-83)
18=Cherokee 4 Dr.(1981-83)	88=CJ-8, Scrambler(1981-86)	15=Grand Wagoneer 4 Dr.(1984-86)	75=Wagoneer 4WD-4 Dr.(1984-86)
77=Cherokee 4WD-2 Dr.(1984-86)			

BODY
CJ=CJ-5, CJ-6, CJ-7, CJ-8, Scrambler(1981-86)
MJ=Comanche Pickup(1986)

STYLES
SJ=Wagoneer(1981-83), Grand Wagoneer(1984-86), Cherokee(1981-83), J-10, J-20(1981-86)
XJ=Wagoneer(1984-86), Cherokee(1984-86)

AR = Use as Required - = Non Illustrated Part P.A.R. = Paint as Required

« RETURN TO GROUP INDEX

GLASS, MIRROR, INSIDE REAR VIEW WITH WORLD CAB, EXPORT CJ-7,8
Figure 23A-600

81J69 600

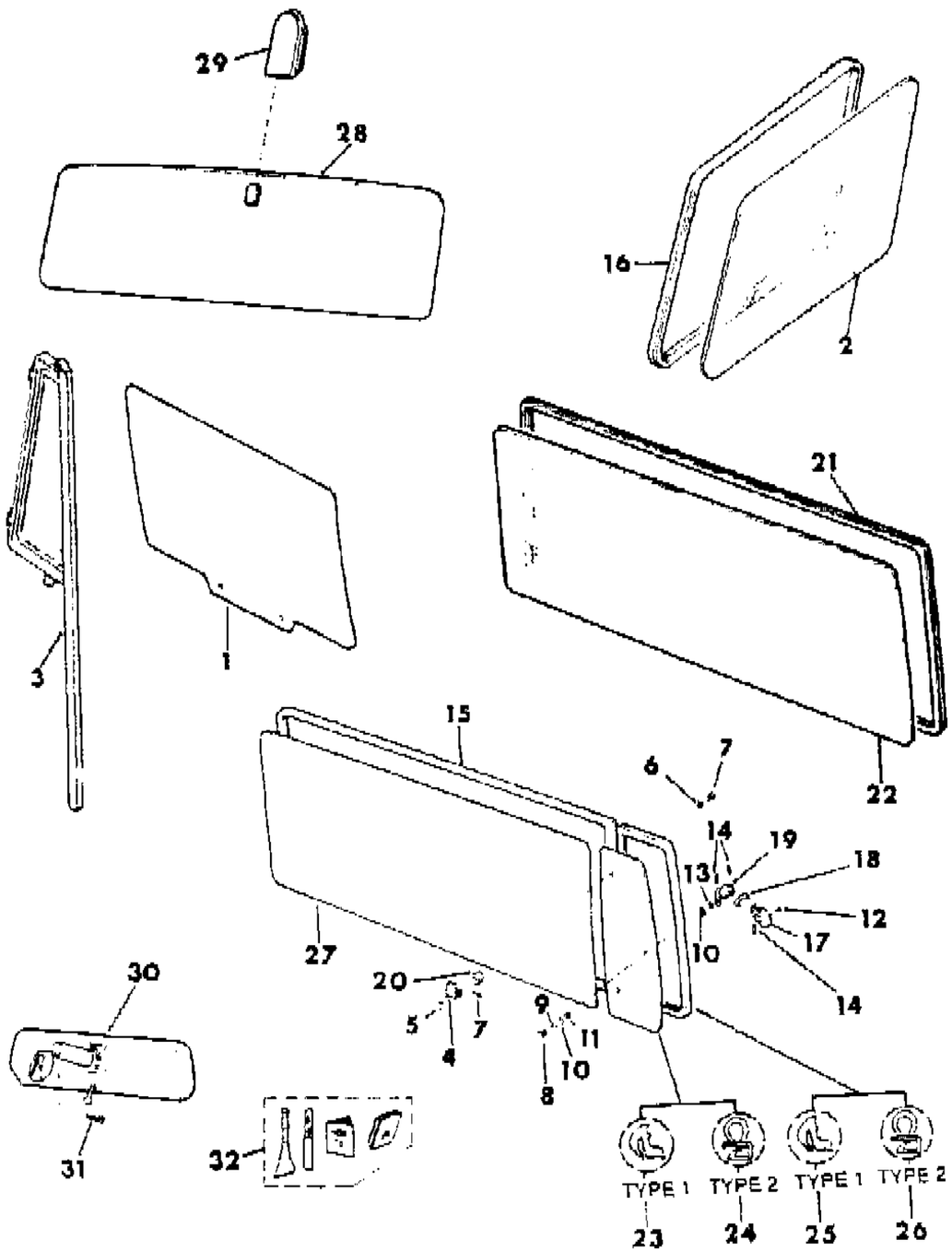

ITEM	PART NUMBER	QTY	BODY	MODEL	DESCRIPTION
1					GLASS, Door
	J556 7897	1			Right
	J556 7898	1			Left
2					GLASS, Door Rear
	J805 2573	1			Clear
	J805 2574	1			Tinted
3	J576 2326-7	1			VENT, Pivoting
4					HINGE
	J805 2143	4			Type 1
	9500 0617	4			Type 2
5	J805 2419	4			BUSHING
6	J805 2417	4			CAP
7	J805 2457	8			SCREW
8	J364 6215	2			STUD
9	J400 3578	2			WASHER, Wave
10	J364 6217	4			WASHER
11	J364 6218	2			WASHER
12	J805 2418	4			SCREW
13	J400 4570	2			NUT
14	J812 0648	6			PIN, Spring
15					WEATHERSTRIP, Quarter Glass
	J805 2187	2		87	
	J805 2163	2		88	
16					WEATHERSTRIP, Fixed Glass
	J805 2122	1		87	
	J805 2188	1		88	
17	J805 2439	2			BRACKET, Handle
18	J364 6461	2			LINK
19	J364 6460	2			HANDLE
20	J400 6826	4			WASHER, Sealing
21					WEATHERSTRIP, Fixed Glass
	J805 2122	2		87	
	J805 2188	2		88	
22					GLASS, Fixed
	J805 2121	2		87	Clear
	J805 2148	2		87	Tinted
	J805 2145	2		88	Clear
	J805 2151	2		88	Tinted
23					GLASS, Quarter Vent

MODEL CODES

16=Cherokee 2 Dr.(1981-83)
17=Cherokee 2 Dr.(1981-83)
73=Cherokee 2WD-2 Dr.(1984-86)
74=Cherokee 2WD-4 Dr.(1984-86)
18=Cherokee 4 Dr.(1981-83)
77=Cherokee 4WD-2 Dr.(1984-86)
78=Cherokee 4WD-4 Dr.(1984-86)
85=CJ-5 (1981-83)
86=CJ-6(1981)
87=CJ-7(1981-86)
88=CJ-8, Scrambler(1981-86)
64=Comanche 2WD-6 Ft. Box(1986)
66=Comanche 2WD-7 Ft. Box(1986)
63=Comanche 4WD-6 Ft. Box(1986)
65=Comanche 4WD-7 Ft. Box(1986)
15=Grand Wagoneer 4 Dr.(1984-86)
25=J-10 Truck 7 Ft. Box(1981-84)
26=J10 Truck 8 Ft. Box(1981-86)
27=J-20 Truck 8 Ft. Box(1981-86)
15=Wagoneer 4 Dr.(1981-83)
75=Wagoneer 4WD-4 Dr.(1984-86)

BODY
CJ=CJ-5, CJ-6, CJ-7, CJ-8, Scrambler(1981-86)
MJ=Comanche Pickup(1986)

STYLES
SJ=Wagoneer(1981-83), Grand Wagoneer(1984-86), Cherokee(1981-83), J-10, J-20(1981-86)
XJ=Wagoneer(1984-86), Cherokee(1984-86)

AR = Use as Required - = Non Illustrated Part P.A.R. = Paint as Required

« RETURN TO GROUP INDEX »

GLASS, MIRROR, INSIDE REAR VIEW WITH WORLD CAB, EXPORT CJ-7,8
Figure 23A-600

81J69 600

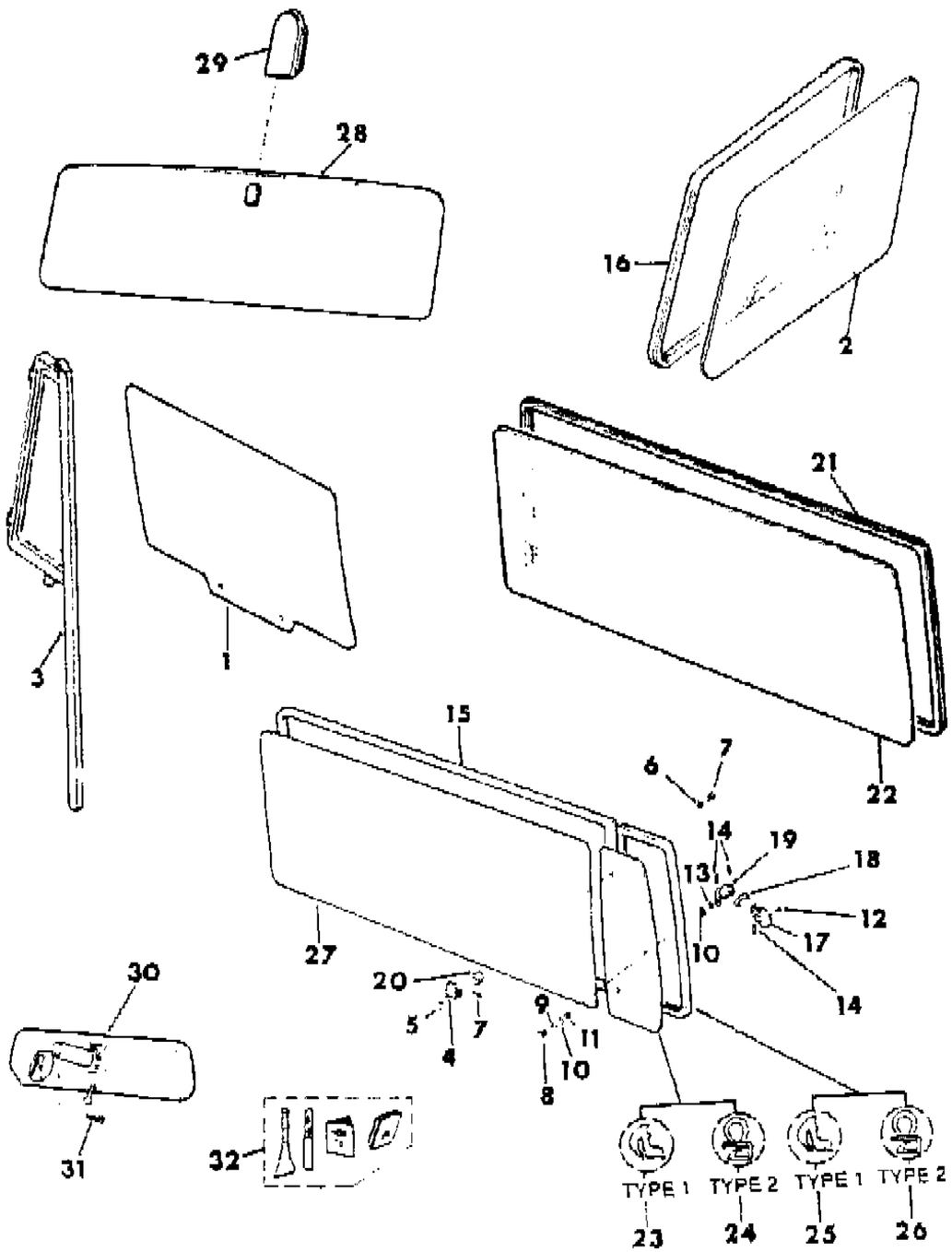

ITEM	PART NUMBER	QTY	BODY	MODEL	DESCRIPTION
	J805 2264	1			Right, Type 1
	J805 2159	1			Left, Type 1
24					GLASS, Quarter Vent
	9500 0620	1			Right, Type 2
	9500 0621	1			Left, Type 2
25					WEATHERSTRIP, Vent Window
	J805 2164	1			Right, Type 1
	J805 2186	1			Left, Type 1
26	9500 0618	2			WEATHERSTRIP, Vent Window, Type 2
27					GLASS, Quarter
	J805 2262	1		87	Tinted, Right
	J805 2150	1		87	Tinted, Left
	J805 2263	1		88	Tinted, Right
	J805 2153	1		88	Tinted, Left
28					GLASS, Windshield
	J575 6180	1			Clear, Economic Commission of Europe, EXPORT
	J575 8372	1			Tinted, Economic Commission of Europe, EXPORT
29	J365 7374	1			SUPPORT, Inside Rear View Mounting (A)
30	J575 6124	1			MIRROR, Inside Rear View
31	J400 5766	1			SCREW
32	J813 3768	1			MOUNTING PACKAGE, Mirror ***

(A) The Mirror Support is replacing Mirror Mounting Kit. When installing a mirror support, use Locktite #312 Adhesive & Accelerator for Locktite #312.(c) End of decal is open

MODEL CODES

16=Cherokee 2 Dr.(1981-83)
17=Cherokee 2 Dr.(1981-83)
73=Cherokee 2WD-2 Dr.(1984-86)
74=Cherokee 2WD-4 Dr.(1984-86)
18=Cherokee 4 Dr.(1981-83)
77=Cherokee 4WD-2 Dr.(1984-86)
78=Cherokee 4WD-4 Dr.(1984-86)
85=CJ-5 (1981-83)
86=CJ-6(1981)
87=CJ-7(1981-86)
88=CJ-8, Scrambler(1981-86)
64=Comanche 2WD-6 Ft. Box(1986)
66=Comanche 2WD-7 Ft. Box(1986)
63=Comanche 4WD-6 Ft. Box(1986)
65=Comanche 4WD-7 Ft. Box(1986)
15=Grand Wagoneer 4 Dr.(1984-86)
25=J-10 Truck 7 Ft. Box(1981-84)
26=J10 Truck 8 Ft. Box(1981-86)
27=J-20 Truck 8 Ft. Box(1981-86)
15=Wagoneer 4 Dr.(1981-83)
75=Wagoneer 4WD-4 Dr.(1984-86)

BODY
CJ=CJ-5, CJ-6, CJ-7, CJ-8, Scrambler(1981-86)
MJ=Comanche Pickup(1986)

STYLES
SJ=Wagoneer(1981-83), Grand Wagoneer(1984-86), Cherokee(1981-83), J-10, J-20(1981-86)
XJ=Wagoneer(1984-86), Cherokee(1984-86)

AR = Use as Required - = Non Illustrated Part P.A.R. = Paint as Required

SEALS, WINDOW CJ
Figure 23A-700

81J69 700

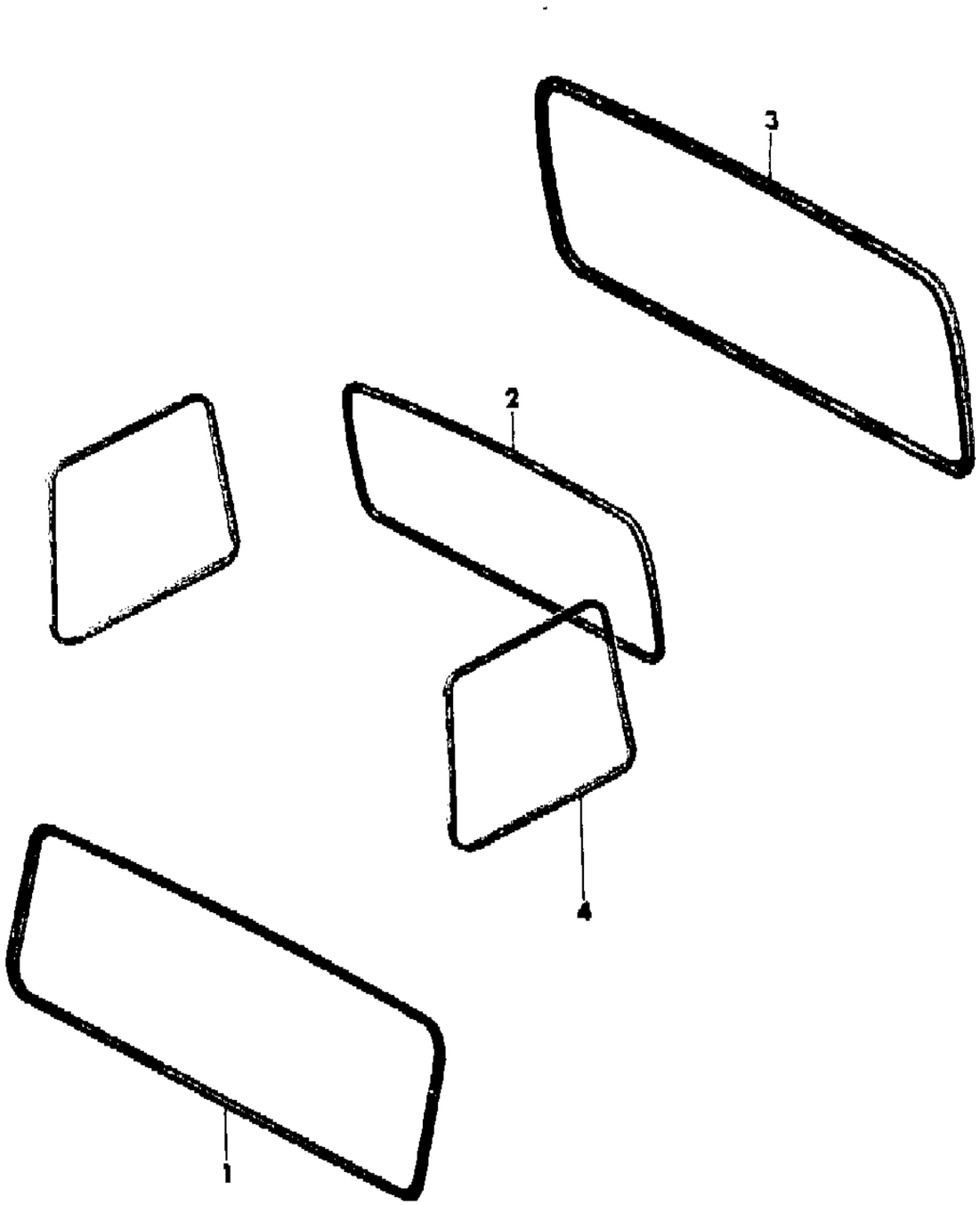

ITEM	PART NUMBER	QTY	BODY	MODEL	DESCRIPTION
1	J545 3949	1			SEAL, Windshield
2	J575 8072	1		87	SEAL, Rear Window
3	J576 1760	1		88	SEAL, Rear Window
4	J546 1835	2		87	SEAL, Quarter Window

MODEL CODES

16=Cherokee 2 Dr.(1981-83)
17=Cherokee 2 Dr.(1981-83)
73=Cherokee 2WD-2 Dr.(1984-86)
74=Cherokee 2WD-4 Dr.(1984-86)
18=Cherokee 4 Dr.(1981-83)
77=Cherokee 4WD-2 Dr.(1984-86)
78=Cherokee 4WD-4 Dr.(1984-86)
85=CJ-5 (1981-83)
86=CJ-6(1981)
87=CJ-7(1981-86)
88=CJ-8, Scrambler(1981-86)
64=Comanche 2WD-6 Ft. Box(1986)
66=Comanche 2WD-7 Ft. Box(1986)
63=Comanche 4WD-6 Ft. Box(1986)
65=Comanche 4WD-7 Ft. Box(1986)
15=Grand Wagoneer 4 Dr.(1984-86)
25=J-10 Truck 7 Ft. Box(1981-84)
26=J10 Truck 8 Ft. Box(1981-86)
27=J-20 Truck 8 Ft. Box(1981-86)
15=Wagoneer 4 Dr.(1981-83)
75=Wagoneer 4WD-4 Dr.(1984-86)

BODY

CJ=CJ-5, CJ-6, CJ-7, CJ-8, Scrambler(1981-86)
MJ=Comanche Pickup(1986)

STYLES

SJ=Wagoneer(1981-83), Grand Wagoneer(1984-86), Cherokee(1981-83), J-10, J-20(1981-86)
XJ=Wagoneer(1984-86), Cherokee(1984-86)

AR = Use as Required - = Non Illustrated Part P.A.R. = Paint as Required

« RETURN TO GROUP INDEX

TOP ENCLOSURE, FULL METAL, MEYER CAB CJ-5
Figure 23A-800

81J69 800

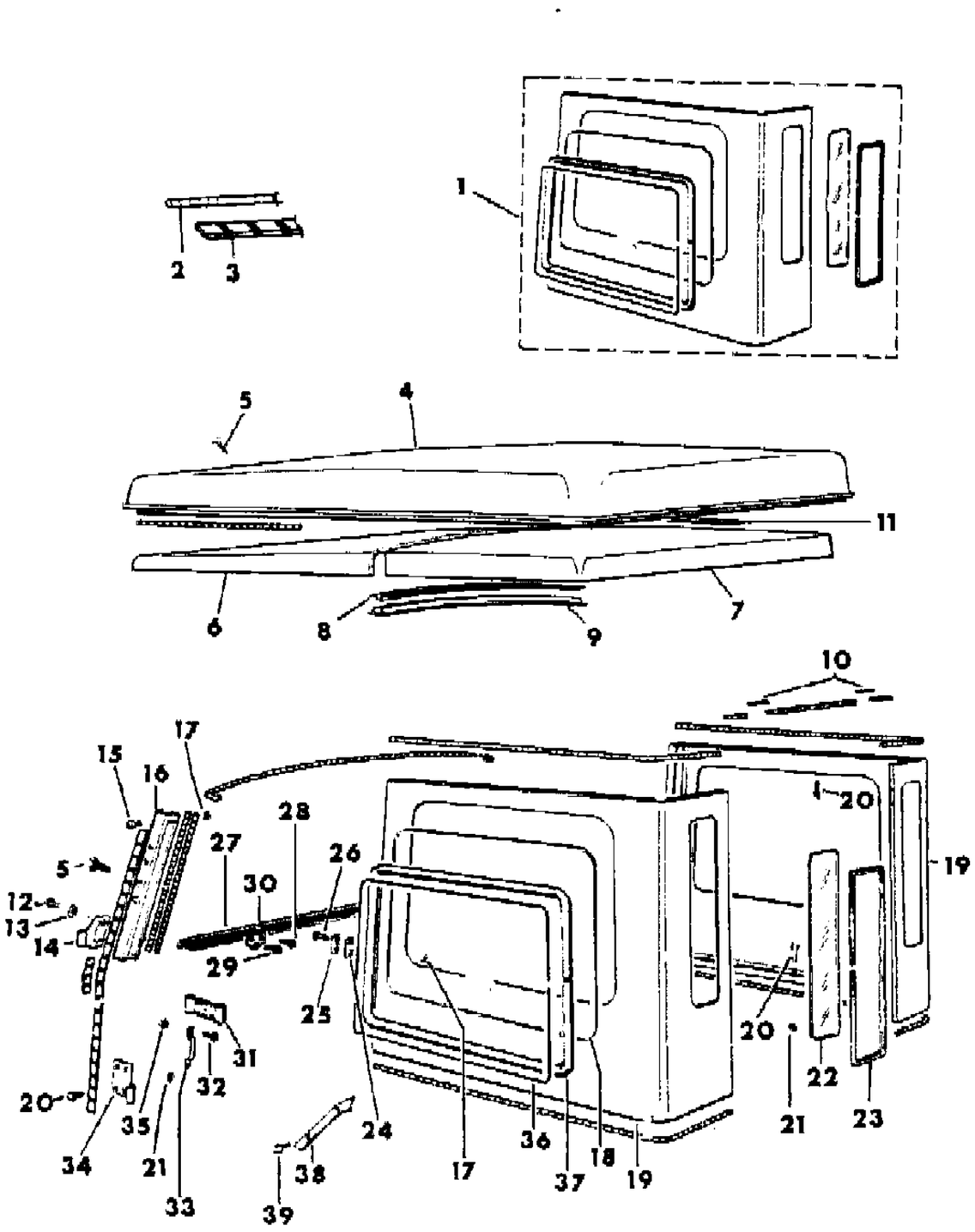

ITEM	PART NUMBER	QTY	BODY	MODEL	DESCRIPTION
1	J204 3158-9	1			PANEL ASSEMBLY, Rear Quarter
2	J204 3169	1			SEAL, 30’
3	J204 2025	1			MOLDING, 36’ ***
4	J276 5012	1			PANEL, Roof
5	J202 0851	AR			SCREW
6	J276 2003	1			HEADLINING, Front ***
7	J204 3626	1			HEADLINING, Rear ***
8	J204 3629	1			RETAINER
9	J204 3630	1			COVER
10	J204 3114	2			SEAL
11	J204 3631	1			TAPE
12	J202 1681	AR			SCREW
13	J202 0326	AR			WASHER
14					HINGE
	J276 3001	1			Right
	J276 3002	1			Left
15	J202 0845	AR			SCREW
16					ADAPTER
	J276 3003	1			Right
	J276 3004	1			Left
17	J202 0695	AR			NUT
18	J204 3657	2			GLASS, Quarter
19					PANEL, Rear Quarter
	J204 3164	1			Right
	J204 3161	1			Left
20	J202 0002	AR			SCREW
21	J202 0312	AR			NUT
22	J204 3162	2			GLASS, Rear Window
23	J204 3163	2			SEAL
24	J204 2019	2			PLATE
25	J204 2018	2			PLATE
26	J202 0805	AR			SCREW
27	J276 3005	1			WEATHERSTRIP
28	J545 0078	AR			BOLT
29	J027 3773	AR			SCREW
30	J545 9697	AR			BRACKET
31	J204 2052	AR			STRAP
32	J202 1250	AR			SCREW
33	J204 2053	2			LOOP, Footman

MODEL CODES

16=Cherokee 2 Dr.(1981-83)
17=Cherokee 2 Dr.(1981-83)
73=Cherokee 2WD-2 Dr.(1984-86)
74=Cherokee 2WD-4 Dr.(1984-86)
18=Cherokee 4 Dr.(1981-83)
77=Cherokee 4WD-2 Dr.(1984-86)
78=Cherokee 4WD-4 Dr.(1984-86)
85=CJ-5 (1981-83)
86=CJ-6(1981)
87=CJ-7(1981-86)
88=CJ-8, Scrambler(1981-86)
64=Comanche 2WD-6 Ft. Box(1986)
66=Comanche 2WD-7 Ft. Box(1986)
63=Comanche 4WD-6 Ft. Box(1986)
65=Comanche 4WD-7 Ft. Box(1986)
15=Grand Wagoneer 4 Dr.(1984-86)
25=J-10 Truck 7 Ft. Box(1981-84)
26=J10 Truck 8 Ft. Box(1981-86)
27=J-20 Truck 8 Ft. Box(1981-86)
15=Wagoneer 4 Dr.(1981-83)
75=Wagoneer 4WD-4 Dr.(1984-86)

BODY
CJ=CJ-5, CJ-6, CJ-7, CJ-8, Scrambler(1981-86)
MJ=Comanche Pickup(1986)

STYLES
SJ=Wagoneer(1981-83), Grand Wagoneer(1984-86), Cherokee(1981-83), J-10, J-20(1981-86)
XJ=Wagoneer(1984-86), Cherokee(1984-86)

AR = Use as Required - = Non Illustrated Part P.A.R. = Paint as Required

« RETURN TO GROUP INDEX »

TOP ENCLOSURE, FULL METAL, MEYER CAB CJ-5
Figure 23A-800

81J69 800

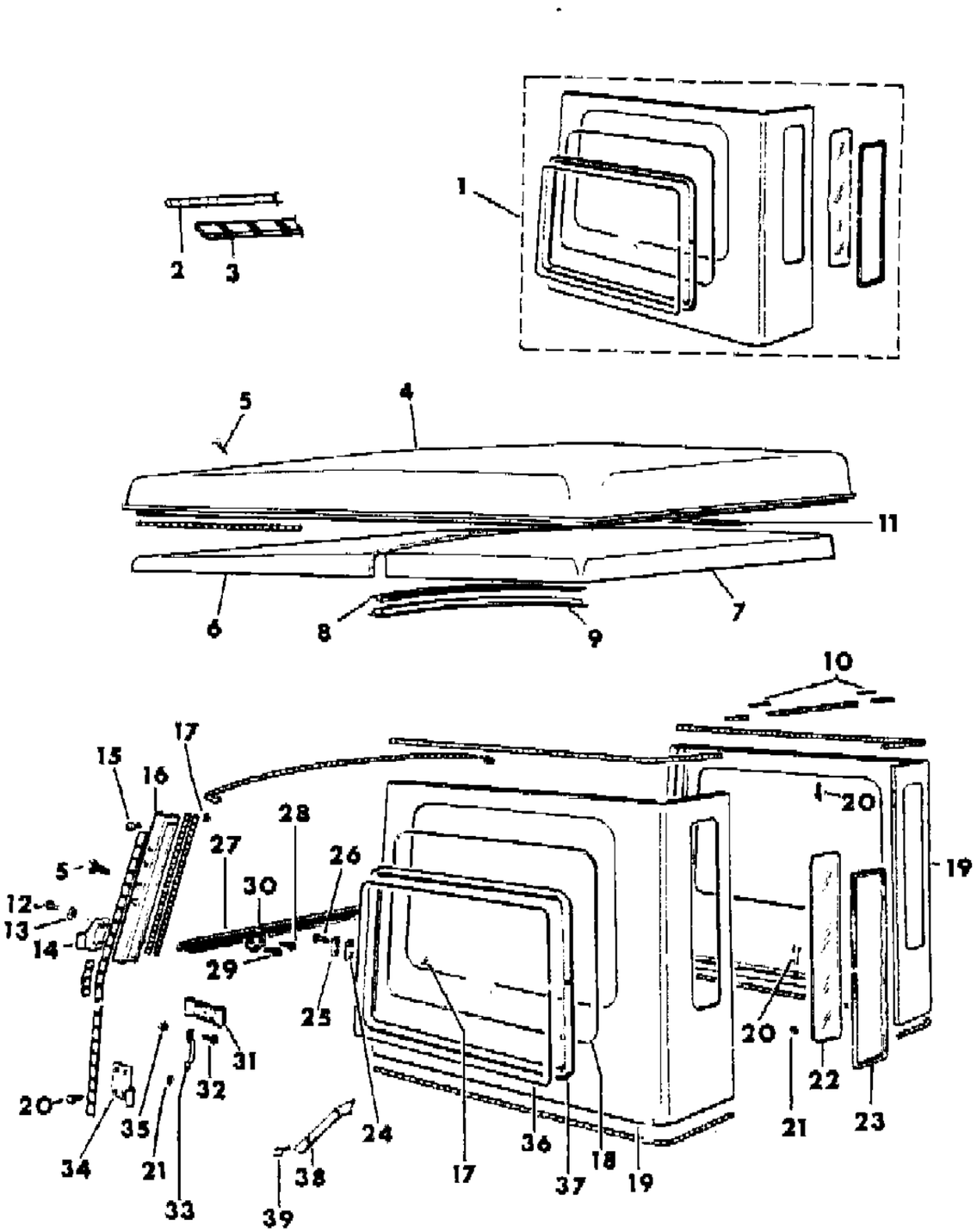

ITEM	PART NUMBER	QTY	BODY	MODEL	DESCRIPTION
34	J204 2016-7	1			HINGE
35	J202 1251	AR			NUT
36	J204 3659	2			MOLDING ***
37	J204 3658	2			SEAL
38	J204 2011	2			STRIP
39	J202 0852	4			SCREW

MODEL CODES

16=Cherokee 2 Dr.(1981-83)
17=Cherokee 2 Dr.(1981-83)
73=Cherokee 2WD-2 Dr.(1984-86)
74=Cherokee 2WD-4 Dr.(1984-86)
18=Cherokee 4 Dr.(1981-83)
77=Cherokee 4WD-2 Dr.(1984-86)
78=Cherokee 4WD-4 Dr.(1984-86)
85=CJ-5 (1981-83)
86=CJ-6(1981)
87=CJ-7(1981-86)
88=CJ-8, Scrambler(1981-86)
64=Comanche 2WD-6 Ft. Box(1986)
66=Comanche 2WD-7 Ft. Box(1986)
63=Comanche 4WD-6 Ft. Box(1986)
65=Comanche 4WD-7 Ft. Box(1986)
15=Grand Wagoneer 4 Dr.(1984-86)
25=J-10 Truck 7 Ft. Box(1981-84)
26=J10 Truck 8 Ft. Box(1981-86)
27=J-20 Truck 8 Ft. Box(1981-86)
15=Wagoneer 4 Dr.(1981-83)
75=Wagoneer 4WD-4 Dr.(1984-86)

BODY
CJ=CJ-5, CJ-6, CJ-7, CJ-8, Scrambler(1981-86)
MJ=Comanche Pickup(1986)

STYLES
SJ=Wagoneer(1981-83), Grand Wagoneer(1984-86), Cherokee(1981-83), J-10, J-20(1981-86)
XJ=Wagoneer(1984-86), Cherokee(1984-86)

AR = Use as Required - = Non Illustrated Part P.A.R. = Paint as Required

« RETURN TO GROUP INDEX

TOP ENCLOSURE, FULL PLASTIC CJ-7
Figure 23A-900

81J69 900

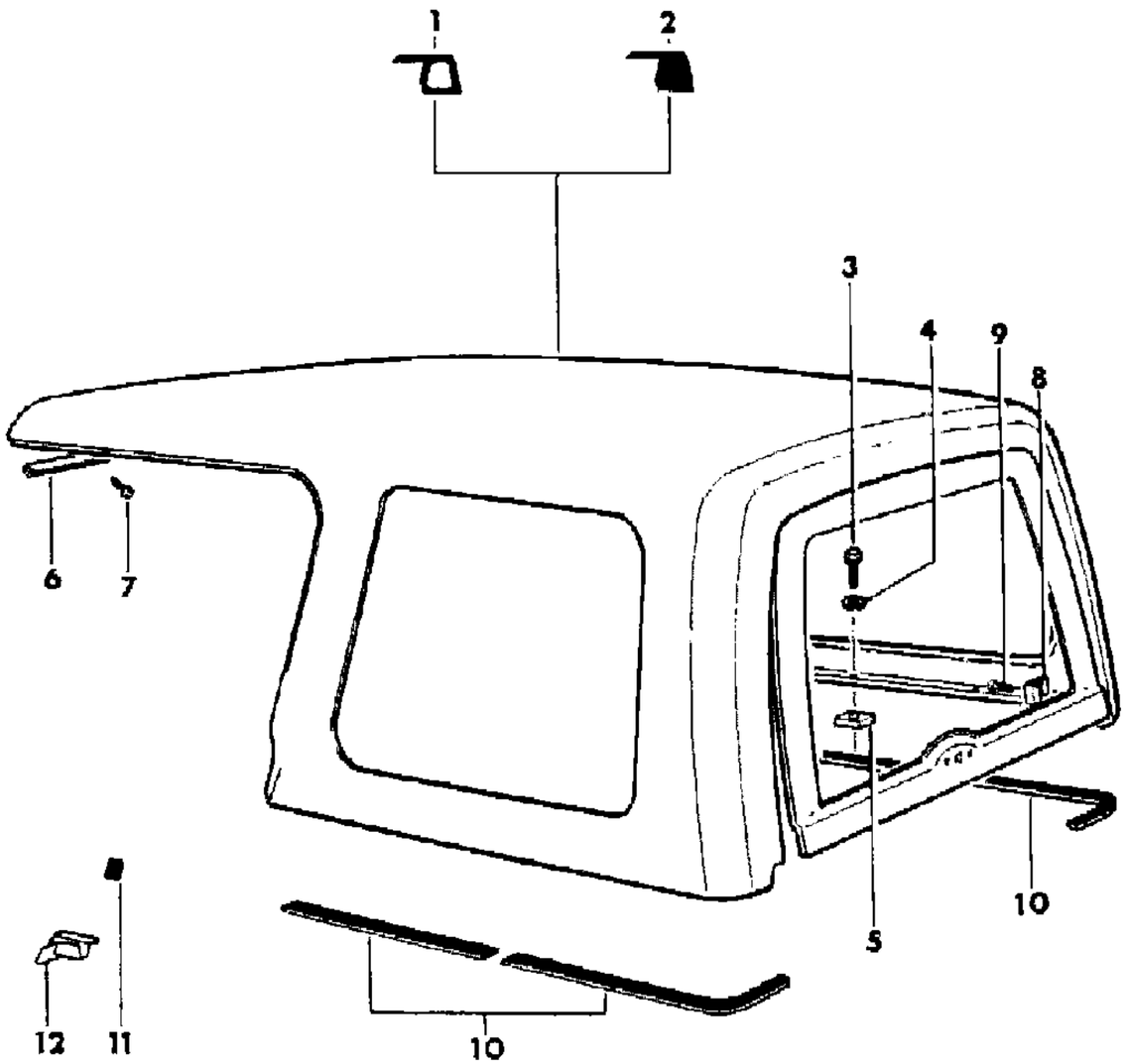

ITEM	PART NUMBER	QTY	BODY	MODEL	DESCRIPTION
1					TOP ENCLOSURE, Hard ***
	J575 1389	1			1981: Black, Clear Glass, With Glass and Lift Door (A) (B)
	J575 1391	1			1981: Black, Grey Glass, With Glass and Lift Door (A) (B)
	J575 8197	1			1981: Black, EXPORT, With Glass and Lift Door (B)
	J576 2304	1			1982-86: Black, Without Glass and Weatherstrip, With Lift Door (A) (B)
	J576 2307	1			1982-83: Black EXPORT, With Lift Door, Without Side Windows, Glass and Weatherstrip (B)
	J576 5319	1			1985-86: Honey, Without Glass and Weatherstrip, With Lift Door (B)
	J575 8235	1			1981: Nutmeg, Bronze Glass, With Glass and Lift Door (A) (B)
	J575 8219	1			1981: Nutmeg, EXPORT, With Glass and Lift Door (B)
	J576 2305	1			1982-84: Nutmeg, Without Glass and Weatherstrip, With Lift Door (A) (B)
	J575 2309	1			1982-83: Slate Blue, Limited, Without Glass and Weatherstrip, With Lift Door (B)
	J576 2308	1			1982-83: Silver, Limited, Without Glass and Weatherstrip, With Lift Door (B)
	J575 0928	1			1981: White, Clear Glass, With Glass and Lift Door (A) (B)
	J575 8198	1			1981: White, EXPORT, With Glass and Lift Door (B)
	J576 2303	1			1982-86: White, Without Glass and Weatherstrip, With Lift Door (A) (B)
	J576 2306	1			1982-83: White, EXPORT, With Lift Door, Without Side Windows, Glass and Weatherstrip (B)
2					TOP ENCLOSURE, Hard ***
	J575 7070	1			1981: Black, EXPORT, With Glass and Lift Door, Without Side Windows (B)
	J575 2377	1			1981: White, EXPORT, With Glass and Lift Door, Without Side Windows (B)
3					SCREW
	J400 5673	8			Hex Head, 1.5"lg
	J400 4520	8			Hex Head, 1.1"lg
	J400 7007	8			Phillips Head, Limited
	J400 7086	8			Truss Head, Japan
4	J096 6359	8			WASHER, Lock Japan
5	J096 8155	AR			PLATE, Tapping
6	J546 0180	1			SEAL
7					SCREW
	J400 5631	5			1" long

MODEL CODES

16=Cherokee 2 Dr.(1981-83)
17=Cherokee 2 Dr.(1981-83)
73=Cherokee 2WD-2 Dr.(1984-86)
74=Cherokee 2WD-4 Dr.(1984-86)
18=Cherokee 4 Dr.(1981-83)
77=Cherokee 4WD-2 Dr.(1984-86)
78=Cherokee 4WD-4 Dr.(1984-86)
85=CJ-5 (1981-83)
86=CJ-6(1981)
87=CJ-7(1981-86)
88=CJ-8, Scrambler(1981-86)
64=Comanche 2WD-6 Ft. Box(1986)
66=Comanche 2WD-7 Ft. Box(1986)
63=Comanche 4WD-6 Ft. Box(1986)
65=Comanche 4WD-7 Ft. Box(1986)
15=Grand Wagoneer 4 Dr.(1984-86)
25=J-10 Truck 7 Ft. Box(1981-84)
26=J10 Truck 8 Ft. Box(1981-86)
27=J-20 Truck 8 Ft. Box(1981-86)
15=Wagoneer 4 Dr.(1981-83)
75=Wagoneer 4WD-4 Dr.(1984-86)

BODY
CJ=CJ-5, CJ-6, CJ-7, CJ-8, Scrambler(1981-86)
MJ=Comanche Pickup(1986)

STYLES
SJ=Wagoneer(1981-83), Grand Wagoneer(1984-86), Cherokee(1981-83), J-10, J-20(1981-86)
XJ=Wagoneer(1984-86), Cherokee(1984-86)

AR = Use as Required - = Non Illustrated Part P.A.R. = Paint as Required

TOP ENCLOSURE, FULL PLASTIC CJ-7
Figure 23A-900

81J69 900

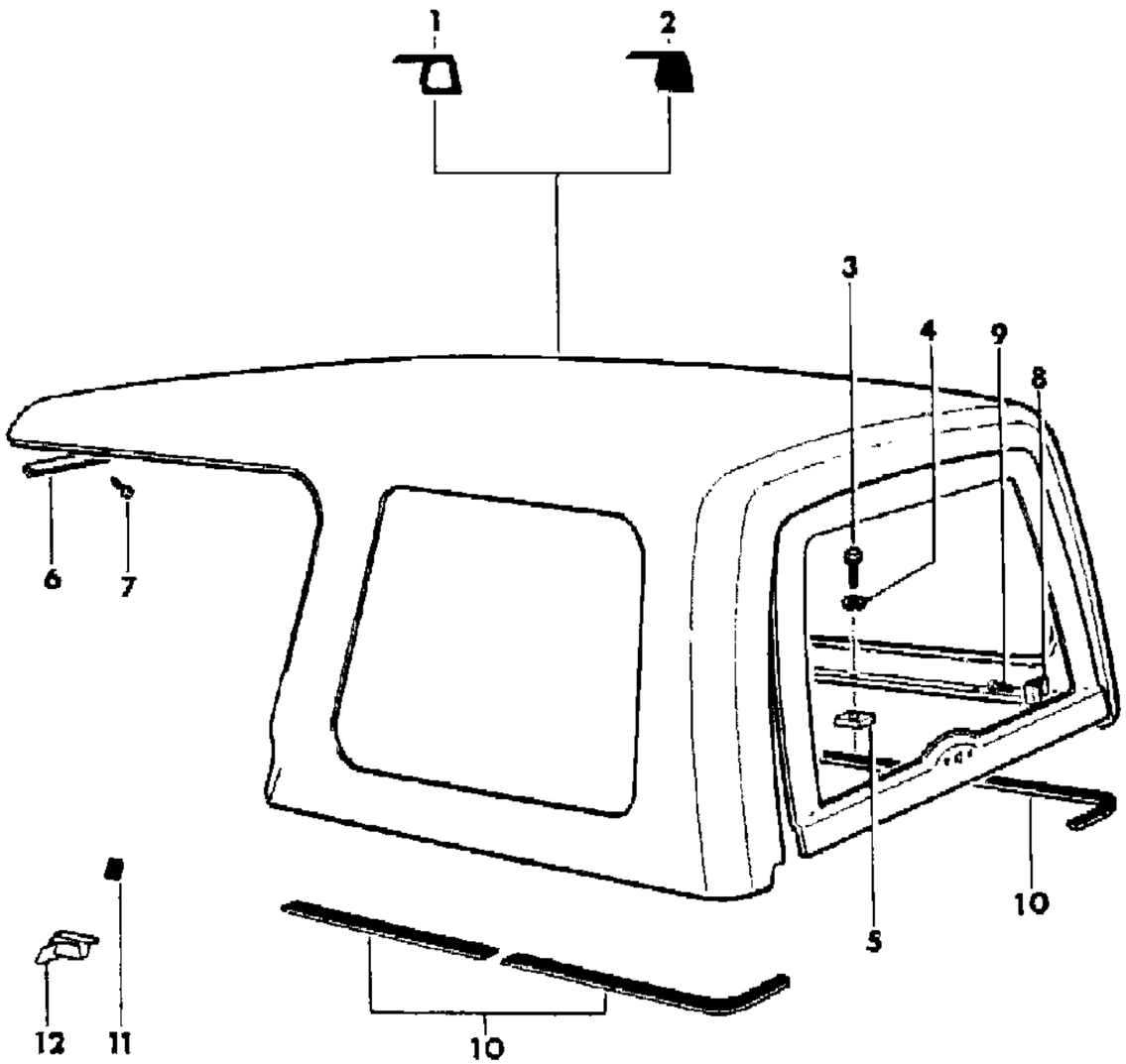

ITEM	PART NUMBER	QTY	BODY	MODEL	DESCRIPTION
	J400 1701	5			.5" Long
8	J546 0633	2			STRIKER, Latch
9					SCREW
	J400 5622	4			0.8"lg
	J400 4648	4			0.6"lg
10					SEAL
	J545 9582-3	1			Front
	J545 9582-3	1			Rear
11					SEAL
	J546 0136	2			1981-84
	J576 6638-9	1			1985-86
12	J576 3592-3	1			SHIELD

(A) Must be modified for use with Sun Roof option. (c) End of decal is open

(B) Lift door handle in this assembly is less cylinder and keys. If lock cylinder is needed, and lift door handle has ribs, order part #J8122972. (c) End of decal is open

If lift door handle is smooth, order part #5459273. Lock cylinder must be coded before inserting into handle. (c) End of decal is open

MODEL CODES

16=Cherokee 2 Dr.(1981-83)
17=Cherokee 2 Dr.(1981-83)
73=Cherokee 2WD-2 Dr.(1984-86)
74=Cherokee 2WD-4 Dr.(1984-86)
18=Cherokee 4 Dr.(1981-83)
77=Cherokee 4WD-2 Dr.(1984-86)
78=Cherokee 4WD-4 Dr.(1984-86)
85=CJ-5 (1981-83)
86=CJ-6(1981)
87=CJ-7(1981-86)
88=CJ-8, Scrambler(1981-86)
64=Comanche 2WD-6 Ft. Box(1986)
66=Comanche 2WD-7 Ft. Box(1986)
63=Comanche 4WD-6 Ft. Box(1986)
65=Comanche 4WD-7 Ft. Box(1986)
15=Grand Wagoneer 4 Dr.(1984-86)
25=J-10 Truck 7 Ft. Box(1981-84)
26=J10 Truck 8 Ft. Box(1981-86)
27=J-20 Truck 8 Ft. Box(1981-86)
15=Wagoneer 4 Dr.(1981-83)
75=Wagoneer 4WD-4 Dr.(1984-86)

BODY
CJ=CJ-5, CJ-6, CJ-7, CJ-8, Scrambler(1981-86)
MJ=Comanche Pickup(1986)

STYLES
SJ=Wagoneer(1981-83), Grand Wagoneer(1984-86), Cherokee(1981-83), J-10, J-20(1981-86)
XJ=Wagoneer(1984-86), Cherokee(1984-86)

AR = Use as Required - = Non Illustrated Part P.A.R. = Paint as Required

TOP ENCLOSURE, FULL METAL, WORLD CAB, EXPORT CJ-7,8
Figure 23A-1000

81J69 1000

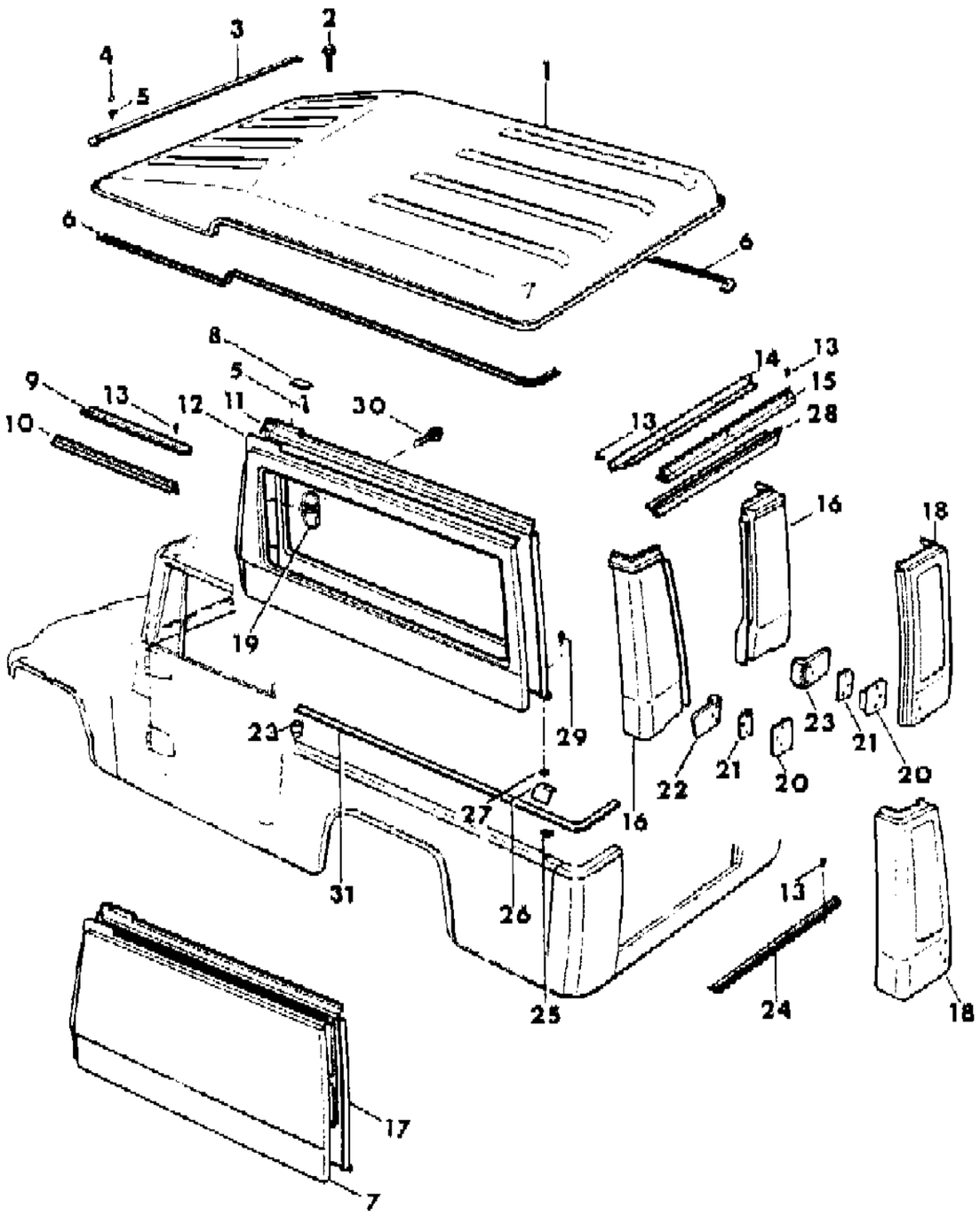

ITEM	PART NUMBER	QTY	BODY	MODEL	DESCRIPTION
1					PANEL, Roof
	J805 2530	1		87	
	J805 2531	1		88	
2	J400 5765	AR			SCREW
3	J805 2059	1			SEAL
4	J400 7084	AR			PLUG
5	J400 6978	AR			SCREW
6					SEAL
	J805 2306-7	1		87	
	J805 2056-7	1		88	
7					PANEL, Side Outer
	J805 2108	1		87	Right
	J805 2083	1		87	Left
	J805 2109	1		88	Right
	J805 2084	1		88	Left
8	J805 2539	1			PLATE
9	J805 2030-1	1			HEADER, Inner ***
10					HEADER, Outer ***
	J805 2027	1			Right
	J805 2028	1			Left
11					PANEL, Side Inner
	J805 2015	1		87	Right
	J805 2017	1		87	Left
	J805 2016	1		88	Right
	J805 2018	1		88	Left
12					PANEL, Side Outer
	J805 2011	1		87	Right
	J805 2013	1		87	Left
	J805 2012	1		88	Right
	J805 2014	1		88	Left
13	J400 6444	AR			SCREW
14	J805 2032	1			HEADER, Inner ***
15	J805 2029	1			HEADER, Outer ***
16					PANEL, Rear Quarter Inner
	J805 2021	1			Right
	J805 2022	1			Left
17					PANEL, Side Inner
	J805 2098	1		87	Right
	J805 2073	1		87	Left

MODEL CODES

16=Cherokee 2 Dr.(1981-83)
17=Cherokee 2 Dr.(1981-83)
73=Cherokee 2WD-2 Dr.(1984-86)
74=Cherokee 2WD-4 Dr.(1984-86)
18=Cherokee 4 Dr.(1981-83)
77=Cherokee 4WD-2 Dr.(1984-86)
78=Cherokee 4WD-4 Dr.(1984-86)
85=CJ-5 (1981-83)
86=CJ-6(1981)
87=CJ-7(1981-86)
88=CJ-8, Scrambler(1981-86)
64=Comanche 2WD-6 Ft. Box(1986)
66=Comanche 2WD-7 Ft. Box(1986)
63=Comanche 4WD-6 Ft. Box(1986)
65=Comanche 4WD-7 Ft. Box(1986)
15=Grand Wagoneer 4 Dr.(1984-86)
25=J-10 Truck 7 Ft. Box(1981-84)
26=J10 Truck 8 Ft. Box(1981-86)
27=J-20 Truck 8 Ft. Box(1981-86)
15=Wagoneer 4 Dr.(1981-83)
75=Wagoneer 4WD-4 Dr.(1984-86)

BODY
CJ=CJ-5, CJ-6, CJ-7, CJ-8, Scrambler(1981-86)
MJ=Comanche Pickup(1986)

STYLES
SJ=Wagoneer(1981-83), Grand Wagoneer(1984-86), Cherokee(1981-83), J-10, J-20(1981-86)
XJ=Wagoneer(1984-86), Cherokee(1984-86)

AR = Use as Required - = Non Illustrated Part P.A.R. = Paint as Required

TOP ENCLOSURE, FULL METAL, WORLD CAB, EXPORT CJ-7,8
Figure 23A-1000

81J69 1000

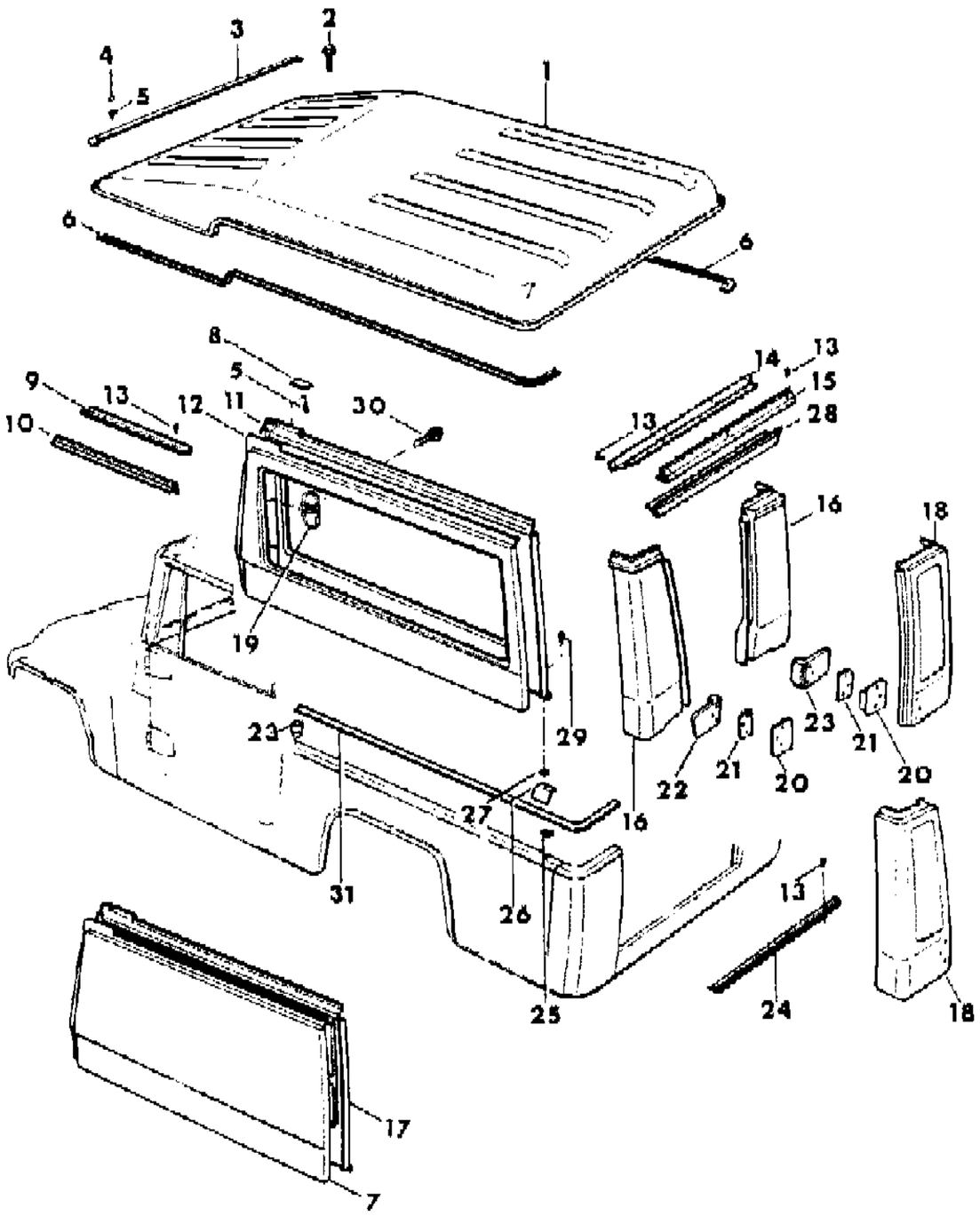

ITEM	PART NUMBER	QTY	BODY	MODEL	DESCRIPTION
	J805 2012	1		88	Right
	J805 2014	1		88	Left
18					PANEL, Rear Quarter, Outer
	J805 2295	1			Right, Left Hand Drive
	J805 2020	1			Left, Left Hand Drive
	J805 2019	1			Right, Right Hand Drive
	J805 2296	1			Left, Right Hand Drive
19	J575 2129	2			BRACKET
20	J805 2039	2			PLATE
21	J805 2220	2			PLATE
22					REINFORCEMENT
	J805 2218	1			Right
	J805 2222	1			Left
23	J400 5220	AR			NUTSERT ***
24	J805 2033	1			PLATE, Scuff
25	J096 8155	2			PLATE, Tapping
26	J805 2176	2			BRACKET
27	J012 0393	2			WASHER
28	J805 3223	1			HEADER, Rear ***
29	J805 2564	2			SCREW
30	J400 1934	AR			SCREW
31					SEAL
	J805 2054	AR		87	
	J805 2055	AR		88	

MODEL CODES

16=Cherokee 2 Dr.(1981-83)	78=Cherokee 4WD-4 Dr.(1984-86)	64=Comanche 2WD-6 Ft. Box(1986)	25=J-10 Truck 7 Ft. Box(1981-84)
17=Cherokee 2 Dr.(1981-83)	85=CJ-5 (1981-83)	66=Comanche 2WD-7 Ft. Box(1986)	26=J10 Truck 8 Ft. Box(1981-86)
73=Cherokee 2WD-2 Dr.(1984-86)	86=CJ-6(1981)	63=Comanche 4WD-6 Ft. Box(1986)	27=J-20 Truck 8 Ft. Box(1981-86)
74=Cherokee 2WD-4 Dr.(1984-86)	87=CJ-7(1981-86)	65=Comanche 4WD-7 Ft. Box(1986)	15=Wagoneer 4 Dr.(1981-83)
18=Cherokee 4 Dr.(1981-83)	88=CJ-8, Scrambler(1981-86)	15=Grand Wagoneer 4 Dr.(1984-86)	75=Wagoneer 4WD-4 Dr.(1984-86)
77=Cherokee 4WD-2 Dr.(1984-86)			

BODY
CJ=CJ-5, CJ-6, CJ-7, CJ-8, Scrambler(1981-86)
MJ=Comanche Pickup(1986)

STYLES
SJ=Wagoneer(1981-83), Grand Wagoneer(1984-86), Cherokee(1981-83), J-10, J-20(1981-86)
XJ=Wagoneer(1984-86), Cherokee(1984-86)

AR = Use as Required - = Non Illustrated Part P.A.R. = Paint as Required

« RETURN TO GROUP INDEX

TOP ENCLOSURE, HALF PLASTIC SCRAMBLER
Figure 23A-1100

81J69 1100

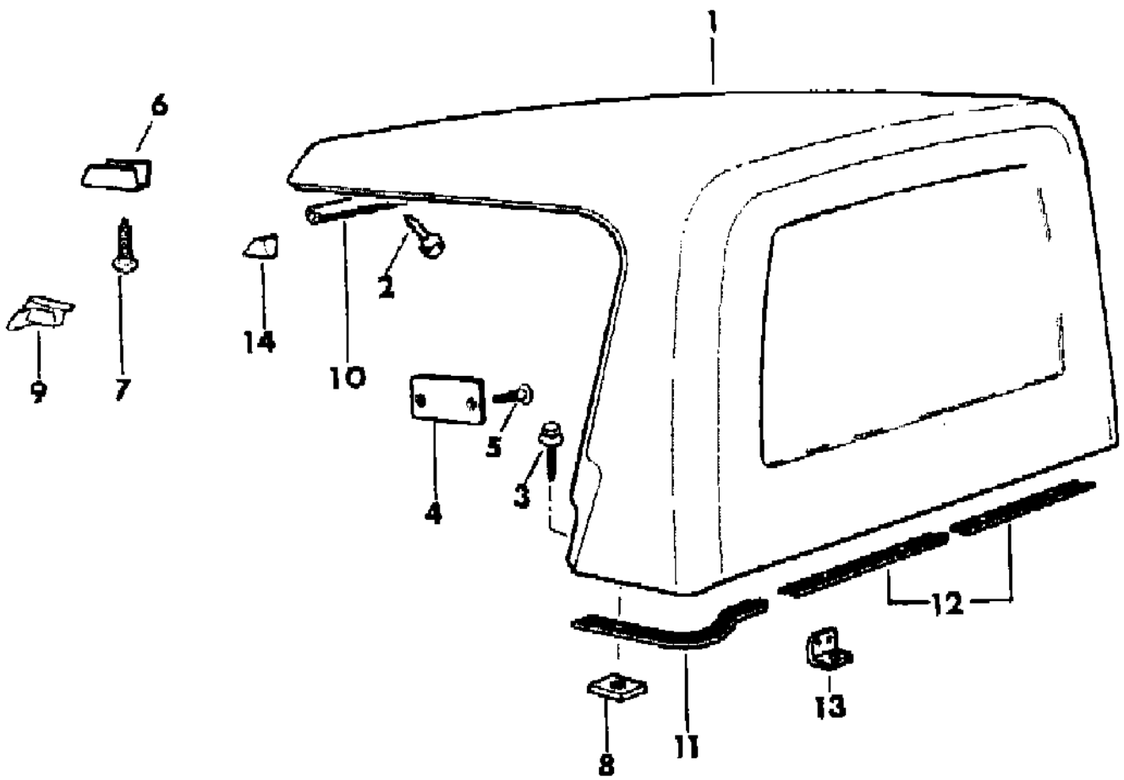

ITEM	PART NUMBER	QTY	BODY	MODEL	DESCRIPTION
1					TOP ENCLOSURE, Hard ***
	J575 8926	1			1981-83: Black
	J576 4052	1			1983-86: Black, Lower corners of Rear Glass Opening have a radius of 3.5" to accomodate Sliding Window. Effective after Vin #048957 approx 4-1-83
	J576 5314	1			1985-86: Honey
	J575 8927	1			1981-83: Nutmeg
	J576 4053	1			1983-84: Nutmeg, Lower Corners of Rear Glass opening have a radius of 3.5" to accomodate Sliding Window. Effective with Vin #048957 approx. 4-1-83.
	J575 8925	1			1981-83: White
	J576 4051	1			1983-86: White, Lower Corner of Rear Glass Opening have a radius of 3.5" to accomodate Sliding Window. Effective with Vin #048957, approx. 4-1-83
2	J400 1701	5			SCREW
3	J400 4455	4			SCREW
4	J575 8788	2			COVER
5	J400 4566	4			SCREW
6	J575 8842	2			CAP, End
7	J400 6403	2			SCREW
8	J096 8155	6			PLATE, Tapping
9	J576 3590-1	1			SHIELD, P.A.R.
10	J546 0180	1			SEAL
11	J575 8778-9	1			SEAL
12	J576 1202-3	1			SEAL
13	J575 8794	4			BRACKET
14	J575 8836	2			SEAL

MODEL CODES

16=Cherokee 2 Dr.(1981-83)
17=Cherokee 2 Dr.(1981-83)
73=Cherokee 2WD-2 Dr.(1984-86)
74=Cherokee 2WD-4 Dr.(1984-86)
18=Cherokee 4 Dr.(1981-83)
77=Cherokee 4WD-2 Dr.(1984-86)
78=Cherokee 4WD-4 Dr.(1984-86)
85=CJ-5 (1981-83)
86=CJ-6(1981)
87=CJ-7(1981-86)
88=CJ-8, Scrambler(1981-86)
64=Comanche 2WD-6 Ft. Box(1986)
66=Comanche 2WD-7 Ft. Box(1986)
63=Comanche 4WD-6 Ft. Box(1986)
65=Comanche 4WD-7 Ft. Box(1986)
15=Grand Wagoneer 4 Dr.(1984-86)
25=J-10 Truck 7 Ft. Box(1981-84)
26=J10 Truck 8 Ft. Box(1981-86)
27=J-20 Truck 8 Ft. Box(1981-86)
15=Wagoneer 4 Dr.(1981-83)
75=Wagoneer 4WD-4 Dr.(1984-86)

BODY

CJ=CJ-5, CJ-6, CJ-7, CJ-8, Scrambler(1981-86)
MJ=Comanche Pickup(1986)

STYLES

SJ=Wagoneer(1981-83), Grand Wagoneer(1984-86), Cherokee(1981-83), J-10, J-20(1981-86)
XJ=Wagoneer(1984-86), Cherokee(1984-86)

AR = Use as Required - = Non Illustrated Part P.A.R. = Paint as Required

« RETURN TO GROUP INDEX

PANELS, BODY SIDE CJ
Figure 23A-1200

81J69 1200

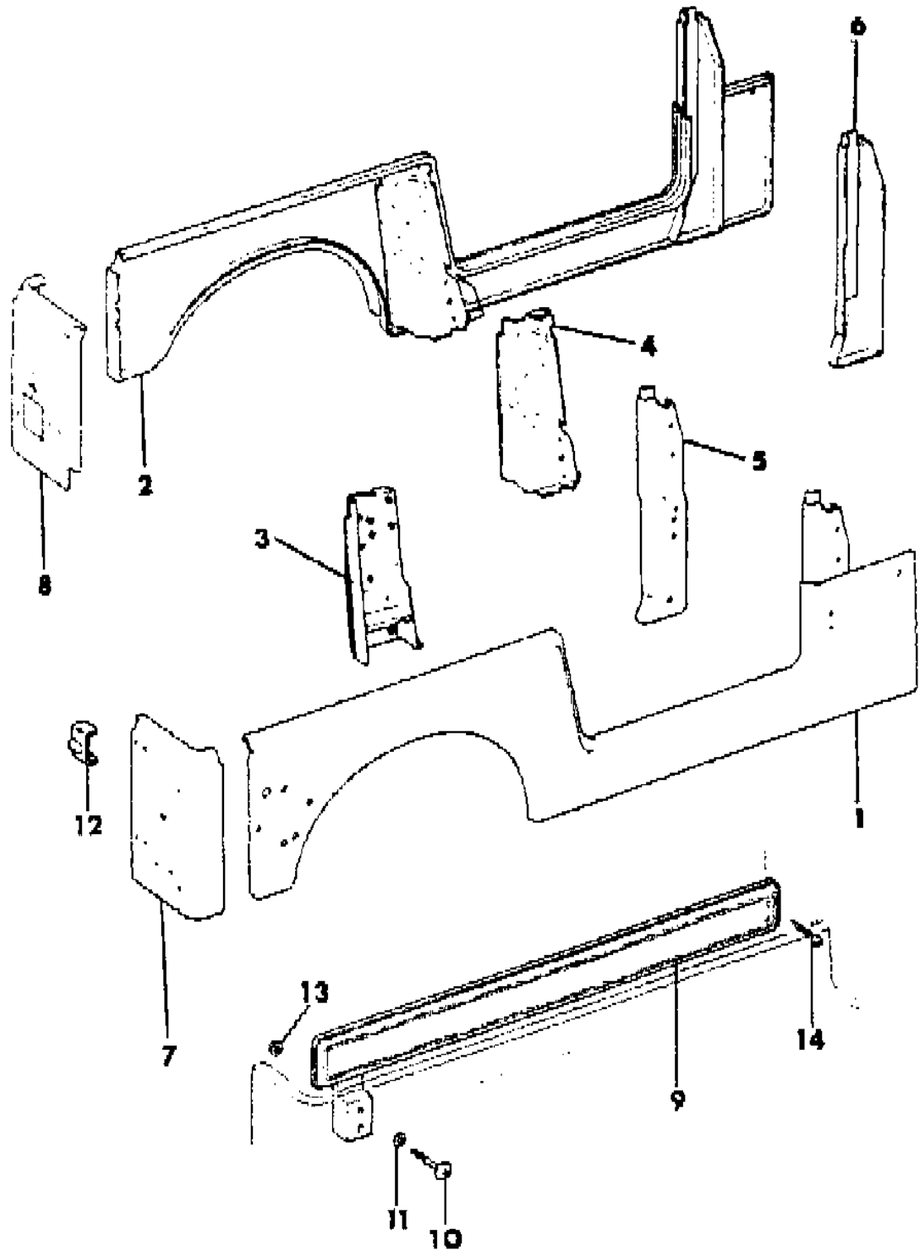

ITEM	PART NUMBER	QTY	BODY	MODEL	DESCRIPTION
1					PANEL, Side Right
	J813 3337	1		85	With Solid Back Panel
	J812 8294	1		85	With Tailgate
	J812 8402	1		86	EXPORT, With 8" high Wheelhouse
	J812 8296	1		86	EXPORT, With 11" high Wheelhouse
	J813 3532	1		87	
	J813 3342	1		88	
2					PANEL, Side Left
	J813 3112	1		85	With Solid Back Panel
	J812 8401	1		85	EXPORT, With 8" High Wheelhouse, (Panel has holes for Side Marker Lights)
	J813 3695	1		85	EXPORT, With 8" High Wheelhouse,(Panel has no holes for Side Marker Lights)
	J812 8403	1		86	EXPORT, With 8" high Wheelhouse (Panel has holes for Side Marker Lights)
	J813 3696	1		86	EXPORT, With 8" Hight Wheelhouse (Panel has no holes for Side Marker Lights)
	J813 3697	1		86	EXPORT, With 11" high wheelhouse
	J813 3533	1		87	
	J813 3343	1		88	
3	J575 8278	1		87,88	SUPPORT, Side Panel
4	J575 8279	1		87,88	SUPPORT, Side Panel
5	J545 3806	1			PILLAR, Cowl
6	J545 3805	1			PILLAR, Cowl
7					PANEL, Right
	J546 3648	1		85,86	With Tailgate
	J575 8343	1		87,88	1981-83
	J576 4220	1		87,88	1984-86
8					PANEL, Left
	J546 3647	1		85,86	With Tailgate
	J546 1043	1		87,88	1981-83
	J576 4221	1		87,88	1984-86
9					RAIL, Side
	J576 0064-5	1		88	With Lap Type Seat Belts which do not attach to the Sport Bar.
	J576 2104-5	1		88	With Three Point Belt System, which includes a Shoulder Belt attached to the Bar.
10	J400 7020	4		88	BOLT
11	J400 6601	4		88	WASHER
12	J575 8799	2			BRACKET, Latch

MODEL CODES

16=Cherokee 2 Dr.(1981-83)	78=Cherokee 4WD-4 Dr.(1984-86)	64=Comanche 2WD-6 Ft. Box(1986)	25=J-10 Truck 7 Ft. Box(1981-84)
17=Cherokee 2 Dr.(1981-83)	85=CJ-5 (1981-83)	66=Comanche 2WD-7 Ft. Box(1986)	26=J10 Truck 8 Ft. Box(1981-86)
73=Cherokee 2WD-2 Dr.(1984-86)	86=CJ-6(1981)	63=Comanche 4WD-6 Ft. Box(1986)	27=J-20 Truck 8 Ft. Box(1981-86)
74=Cherokee 2WD-4 Dr.(1984-86)	87=CJ-7(1981-86)	65=Comanche 4WD-7 Ft. Box(1986)	15=Wagoneer 4 Dr.(1981-83)
18=Cherokee 4 Dr.(1981-83)	88=CJ-8, Scrambler(1981-86)	15=Grand Wagoneer 4 Dr.(1984-86)	75=Wagoneer 4WD-4 Dr.(1984-86)
77=Cherokee 4WD-2 Dr.(1984-86)			

BODY
CJ=CJ-5, CJ-6, CJ-7, CJ-8, Scrambler(1981-86)
MJ=Comanche Pickup(1986)

STYLES
SJ=Wagoneer(1981-83), Grand Wagoneer(1984-86), Cherokee(1981-83), J-10, J-20(1981-86)
XJ=Wagoneer(1984-86), Cherokee(1984-86)

AR = Use as Required - = Non Illustrated Part P.A.R. = Paint as Required

PANELS, BODY SIDE CJ
Figure 23A-1200

81J69 1200

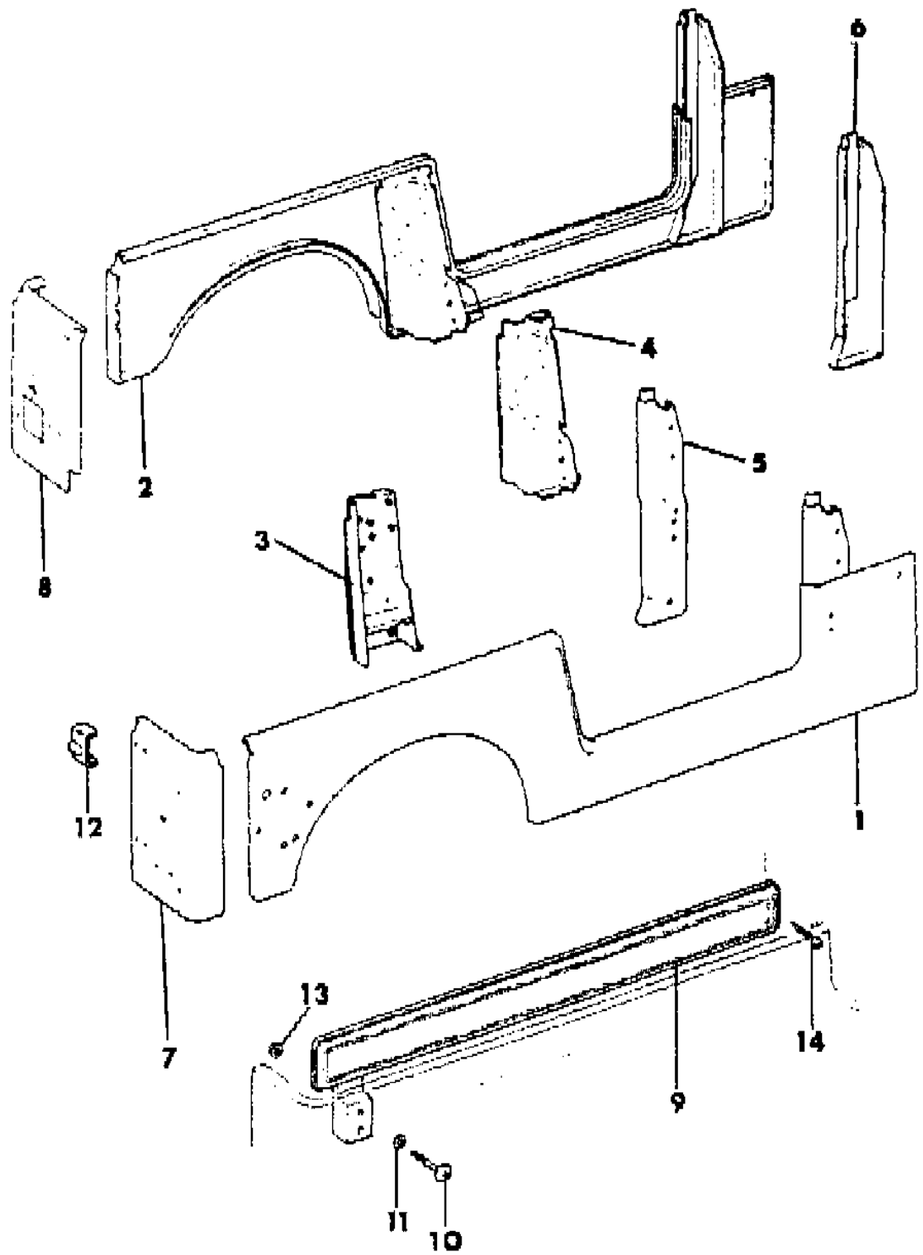

ITEM	PART NUMBER	QTY	BODY	MODEL	DESCRIPTION
13	J400 6445	4			NUT
14					SCREW
	J400 7019	4			1.75"lg, With Lap Type Seat Belts which do not attach to the Sport Bar
	J400 7065	4			2.25"lg, With Three Point Belt System, which includes a Shoulder Belt attached to the Bar

MODEL CODES

16=Cherokee 2 Dr.(1981-83)	78=Cherokee 4WD-4 Dr.(1984-86)	64=Comanche 2WD-6 Ft. Box(1986)	25=J-10 Truck 7 Ft. Box(1981-84)
17=Cherokee 2 Dr.(1981-83)	85=CJ-5 (1981-83)	66=Comanche 2WD-7 Ft. Box(1986)	26=J10 Truck 8 Ft. Box(1981-86)
73=Cherokee 2WD-2 Dr.(1984-86)	86=CJ-6(1981)	63=Comanche 4WD-6 Ft. Box(1986)	27=J-20 Truck 8 Ft. Box(1981-86)
74=Cherokee 2WD-4 Dr.(1984-86)	87=CJ-7(1981-86)	65=Comanche 4WD-7 Ft. Box(1986)	15=Wagoneer 4 Dr.(1981-83)
18=Cherokee 4 Dr.(1981-83)	88=CJ-8, Scrambler(1981-86)	15=Grand Wagoneer 4 Dr.(1984-86)	75=Wagoneer 4WD-4 Dr.(1984-86)
77=Cherokee 4WD-2 Dr.(1984-86)			

BODY
CJ=CJ-5, CJ-6, CJ-7, CJ-8, Scrambler(1981-86)
MJ=Comanche Pickup(1986)

STYLES
SJ=Wagoneer(1981-83), Grand Wagoneer(1984-86), Cherokee(1981-83), J-10, J-20(1981-86)
XJ=Wagoneer(1984-86), Cherokee(1984-86)

AR = Use as Required - = Non Illustrated Part P.A.R. = Paint as Required

TAILGATE CJ-5,6
Figure 23A-1300

81J69 1300

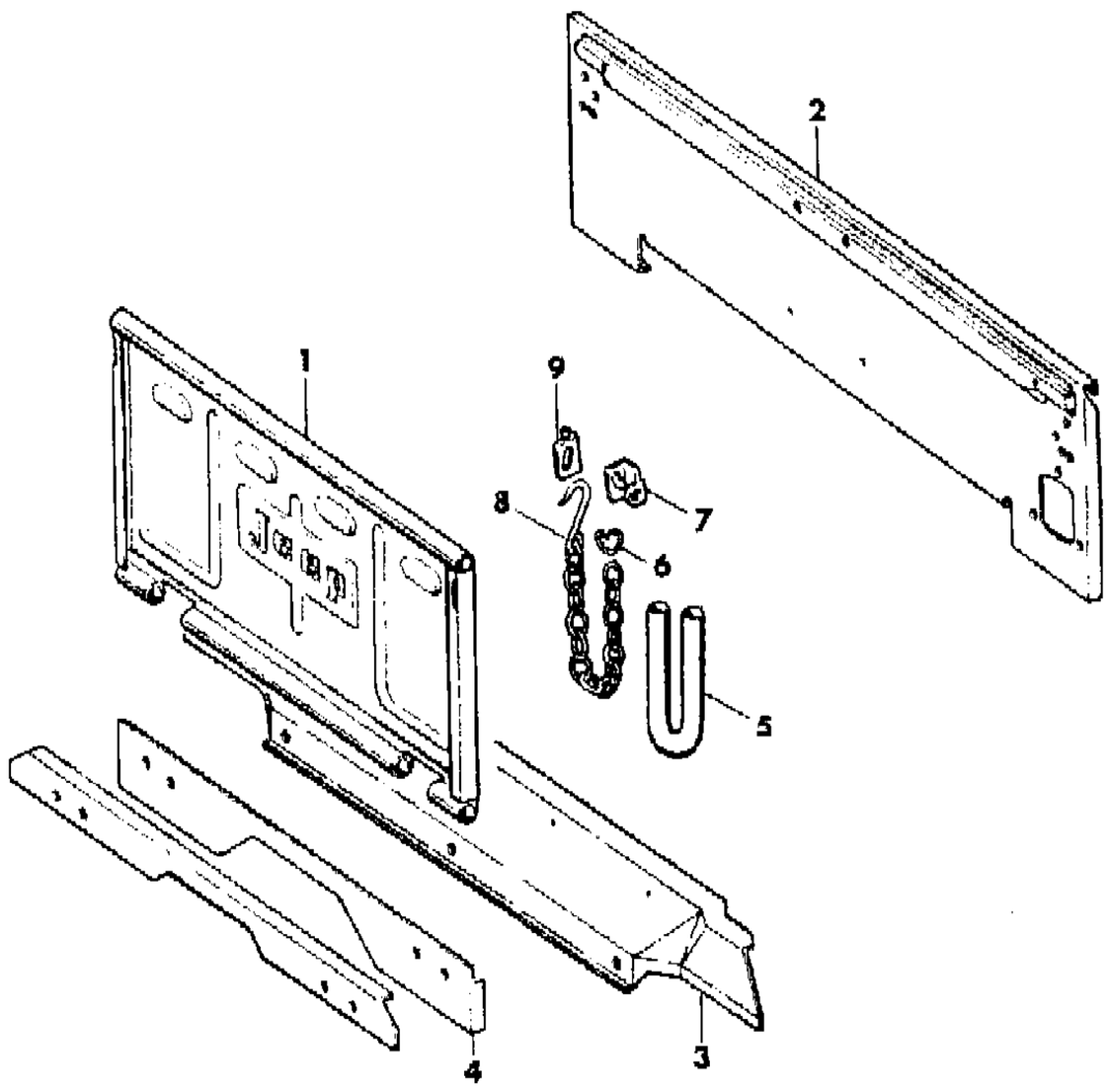

ITEM	PART NUMBER	QTY	BODY	MODEL	DESCRIPTION
1	J813 3144	1			TAILGATE
2	J546 3659	1			PANEL, used with solid back panel
3	J546 0669	1			PANEL, used with tailgate
4	J546 0667	1			PANEL, used with tailgate
5	J575 2475	2			COVER
6	J065 1593	2			LINK
7					LOCK
	J066 3112	1			Right
	J066 3111	1			Left
8	J575 2482-3	1			CHAIN
9					LOCK
	J066 3195	1			Right
	J066 3194	1			Left

MODEL CODES

16=Cherokee 2 Dr.(1981-83)
17=Cherokee 2 Dr.(1981-83)
73=Cherokee 2WD-2 Dr.(1984-86)
74=Cherokee 2WD-4 Dr.(1984-86)
18=Cherokee 4 Dr.(1981-83)
77=Cherokee 4WD-2 Dr.(1984-86)
78=Cherokee 4WD-4 Dr.(1984-86)
85=CJ-5 (1981-83)
86=CJ-6(1981)
87=CJ-7(1981-86)
88=CJ-8, Scrambler(1981-86)
64=Comanche 2WD-6 Ft. Box(1986)
66=Comanche 2WD-7 Ft. Box(1986)
63=Comanche 4WD-6 Ft. Box(1986)
65=Comanche 4WD-7 Ft. Box(1986)
15=Grand Wagoneer 4 Dr.(1984-86)
25=J-10 Truck 7 Ft. Box(1981-84)
26=J10 Truck 8 Ft. Box(1981-86)
27=J-20 Truck 8 Ft. Box(1981-86)
15=Wagoneer 4 Dr.(1981-83)
75=Wagoneer 4WD-4 Dr.(1984-86)

BODY
CJ=CJ-5, CJ-6, CJ-7, CJ-8, Scrambler(1981-86)
MJ=Comanche Pickup(1986)

STYLES
SJ=Wagoneer(1981-83), Grand Wagoneer(1984-86), Cherokee(1981-83), J-10, J-20(1981-86)
XJ=Wagoneer(1984-86), Cherokee(1984-86)

AR = Use as Required - = Non Illustrated Part P.A.R. = Paint as Required

« RETURN TO GROUP INDEX

TAILGATE CJ-7,8, SCRAMBLER
Figure 23A-1400

81J69 1400

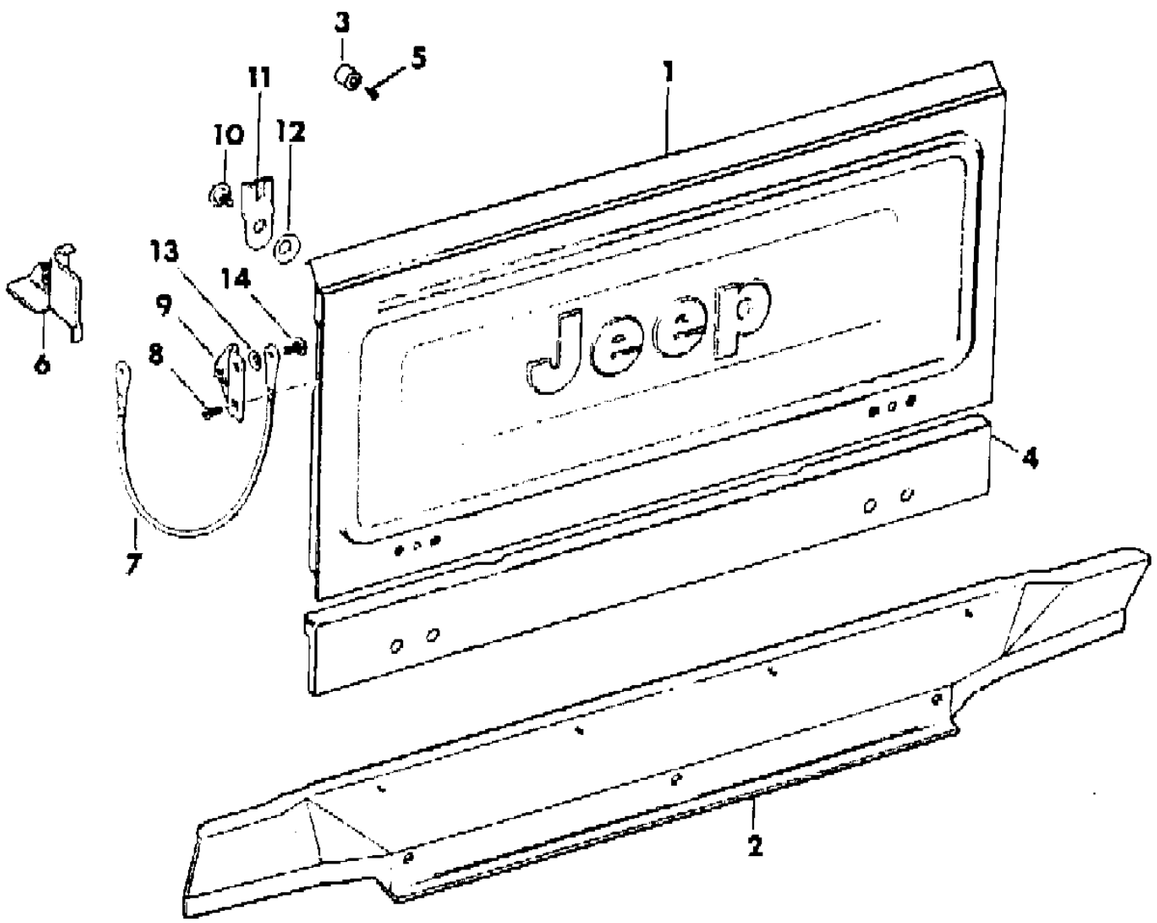

ITEM	PART NUMBER	QTY	BODY	MODEL	DESCRIPTION
1	J813 3145	1			TAILGATE
2	J546 0669	1			PANEL
3	J545 7113	2			BUMPER
4	J546 0668	1			PANEL
5	S942 6366	2			SCREW
6					BRACKET
	J545 7306	1			Right
	J545 7305	1			Left
7	J575 2617	2			CABLE
8	J400 4960	4			SCREW
9	J545 7028	2			BRACKET
10	J095 7717	2			BOLT, Shoulder
11	J545 4030	2			LOCK
12	J095 8649	2			WASHER, Wave
13	J400 3578	2			WASHER, Wave
14	J400 3577	2			SCREW, Shoulder

MODEL CODES
16=Cherokee 2 Dr.(1981-83)
17=Cherokee 2 Dr.(1981-83)
73=Cherokee 2WD-2 Dr.(1984-86)
74=Cherokee 2WD-4 Dr.(1984-86)
18=Cherokee 4 Dr.(1981-83)
77=Cherokee 4WD-2 Dr.(1984-86)
78=Cherokee 4WD-4 Dr.(1984-86)
85=CJ-5 (1981-83)
86=CJ-6(1981)
87=CJ-7(1981-86)
88=CJ-8, Scrambler(1981-86)
64=Comanche 2WD-6 Ft. Box(1986)
66=Comanche 2WD-7 Ft. Box(1986)
63=Comanche 4WD-6 Ft. Box(1986)
65=Comanche 4WD-7 Ft. Box(1986)
15=Grand Wagoneer 4 Dr.(1984-86)
25=J-10 Truck 7 Ft. Box(1981-84)
26=J10 Truck 8 Ft. Box(1981-86)
27=J-20 Truck 8 Ft. Box(1981-86)
15=Wagoneer 4 Dr.(1981-83)
75=Wagoneer 4WD-4 Dr.(1984-86)

BODY
CJ=CJ-5, CJ-6, CJ-7, CJ-8, Scrambler(1981-86)
MJ=Comanche Pickup(1986)

STYLES
SJ=Wagoneer(1981-83), Grand Wagoneer(1984-86), Cherokee(1981-83), J-10, J-20(1981-86)
XJ=Wagoneer(1984-86), Cherokee(1984-86)

AR = Use as Required - = Non Illustrated Part P.A.R. = Paint as Required

« RETURN TO GROUP INDEX

HINGES, TAILGATE CJ
Figure 23A-1500

81J69 1500

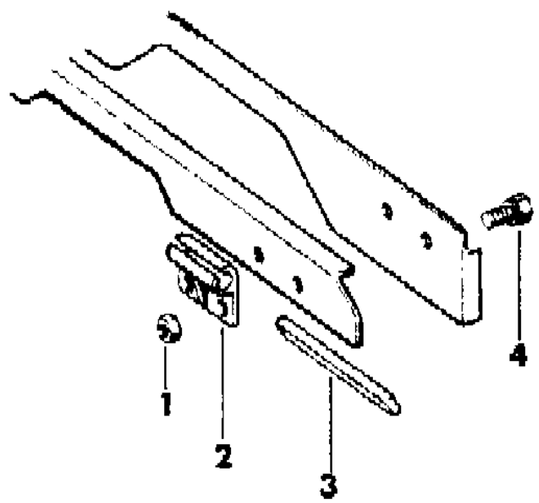

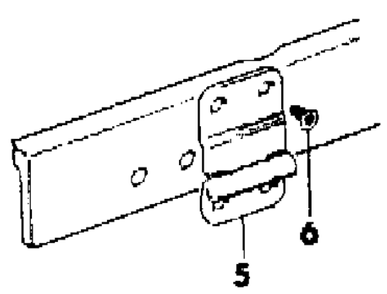

ITEM	PART NUMBER	QTY	BODY	MODEL	DESCRIPTION
1	J012 0377	4			NUT
2	J066 3669	2			HINGE
3	J066 3428	2			PIN, Hinge
4	J400 4455	4			SCREW
5	J546 2416	2			HINGE
6	J400 4956	8			SCREW

MODEL CODES

16=Cherokee 2 Dr.(1981-83)
17=Cherokee 2 Dr.(1981-83)
73=Cherokee 2WD-2 Dr.(1984-86)
74=Cherokee 2WD-4 Dr.(1984-86)
18=Cherokee 4 Dr.(1981-83)
77=Cherokee 4WD-2 Dr.(1984-86)
78=Cherokee 4WD-4 Dr.(1984-86)
85=CJ-5 (1981-83)
86=CJ-6(1981)
87=CJ-7(1981-86)
88=CJ-8, Scrambler(1981-86)
64=Comanche 2WD-6 Ft. Box(1986)
66=Comanche 2WD-7 Ft. Box(1986)
63=Comanche 4WD-6 Ft. Box(1986)
65=Comanche 4WD-7 Ft. Box(1986)
15=Grand Wagoneer 4 Dr.(1984-86)
25=J-10 Truck 7 Ft. Box(1981-84)
26=J10 Truck 8 Ft. Box(1981-86)
27=J-20 Truck 8 Ft. Box(1981-86)
15=Wagoneer 4 Dr.(1981-83)
75=Wagoneer 4WD-4 Dr.(1984-86)

BODY
CJ=CJ-5, CJ-6, CJ-7, CJ-8, Scrambler(1981-86)
MJ=Comanche Pickup(1986)

STYLES
SJ=Wagoneer(1981-83), Grand Wagoneer(1984-86), Cherokee(1981-83), J-10, J-20(1981-86)
XJ=Wagoneer(1984-86), Cherokee(1984-86)

AR = Use as Required - = Non Illustrated Part P.A.R. = Paint as Required

« RETURN TO GROUP INDEX

SPORT BAR CJ
Figure 23A-1600

81J69 1600

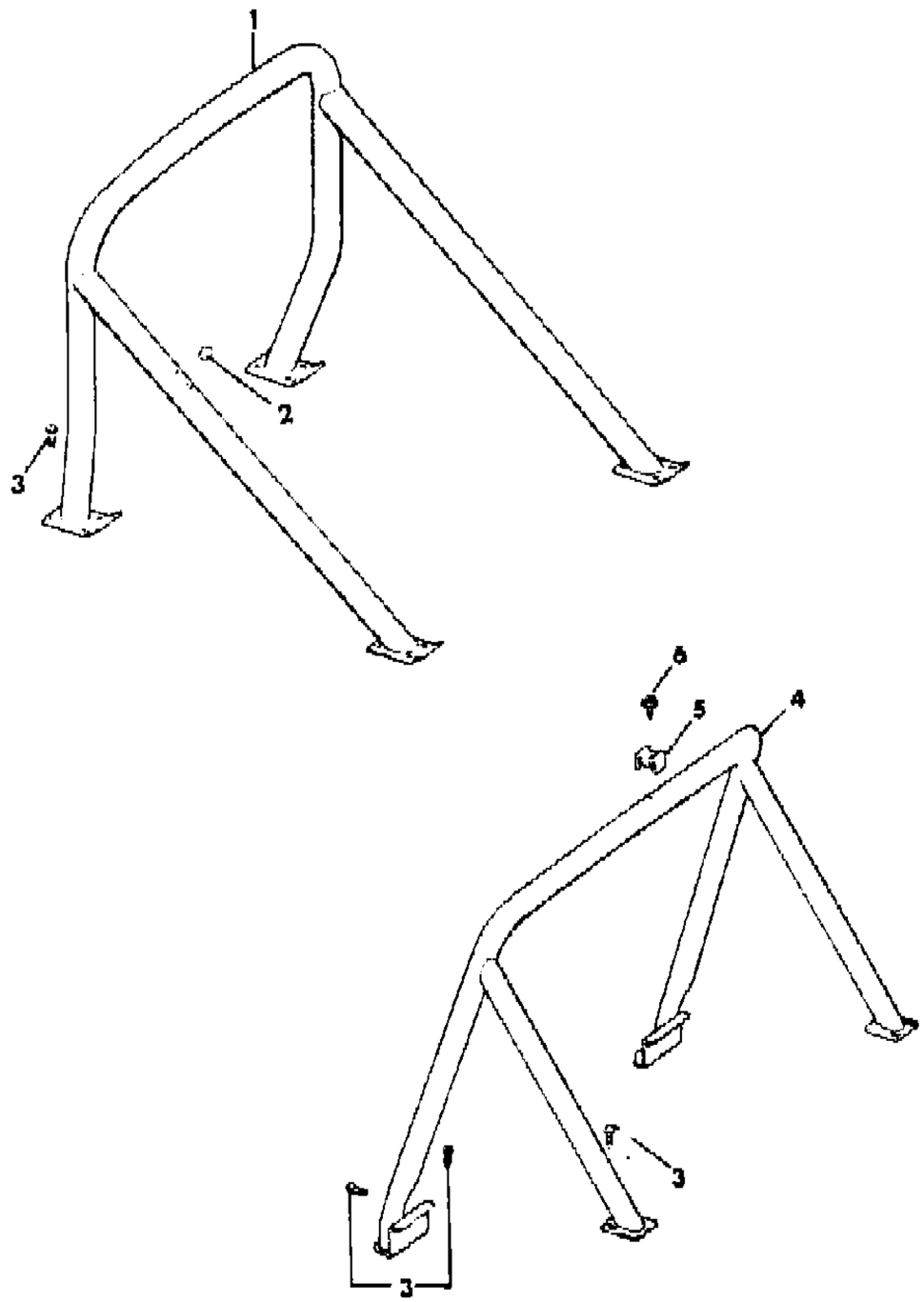

ITEM	PART NUMBER	QTY	BODY	MODEL	DESCRIPTION
1					SPORT BAR ***
	J576 2394	1			Scrambler
	J576 2394	1		88	With Half Top, EXPORT, Economic Commission of Europe, Australian Design Rules, Non-Regulated Markets
	J576 4147	1		88	With Full Soft Top or Open Body, EXPORT, Economic Commission of Europe, Australian Design Rules, Non-Regulated Markets
2	J400 7053	2			PLUG, Scrambler, With 3-Point Seat Belts
3	J400 6426	AR			SCREW
4					SPORT BAR ***
	J576 4145	1		85	
	J576 4146	1		87	
5	J546 1326	2		85,87	BUMPER
6	J400 5631	2		85,87	SCREW

MODEL CODES

16=Cherokee 2 Dr.(1981-83)
17=Cherokee 2 Dr.(1981-83)
73=Cherokee 2WD-2 Dr.(1984-86)
74=Cherokee 2WD-4 Dr.(1984-86)
18=Cherokee 4 Dr.(1981-83)
77=Cherokee 4WD-2 Dr.(1984-86)
78=Cherokee 4WD-4 Dr.(1984-86)
85=CJ-5 (1981-83)
86=CJ-6(1981)
87=CJ-7(1981-86)
88=CJ-8, Scrambler(1981-86)
64=Comanche 2WD-6 Ft. Box(1986)
66=Comanche 2WD-7 Ft. Box(1986)
63=Comanche 4WD-6 Ft. Box(1986)
65=Comanche 4WD-7 Ft. Box(1986)
15=Grand Wagoneer 4 Dr.(1984-86)
25=J-10 Truck 7 Ft. Box(1981-84)
26=J10 Truck 8 Ft. Box(1981-86)
27=J-20 Truck 8 Ft. Box(1981-86)
15=Wagoneer 4 Dr.(1981-83)
75=Wagoneer 4WD-4 Dr.(1984-86)

BODY
CJ=CJ-5, CJ-6, CJ-7, CJ-8, Scrambler(1981-86)
MJ=Comanche Pickup(1986)

STYLES
SJ=Wagoneer(1981-83), Grand Wagoneer(1984-86), Cherokee(1981-83), J-10, J-20(1981-86)
XJ=Wagoneer(1984-86), Cherokee(1984-86)

AR = Use as Required - = Non Illustrated Part P.A.R. = Paint as Required

« RETURN TO GROUP INDEX

SOFT TOP HARDWARE WITH FULL SOFT DOORS CJ-5,7
Figure 23A-1700

81J69 1700

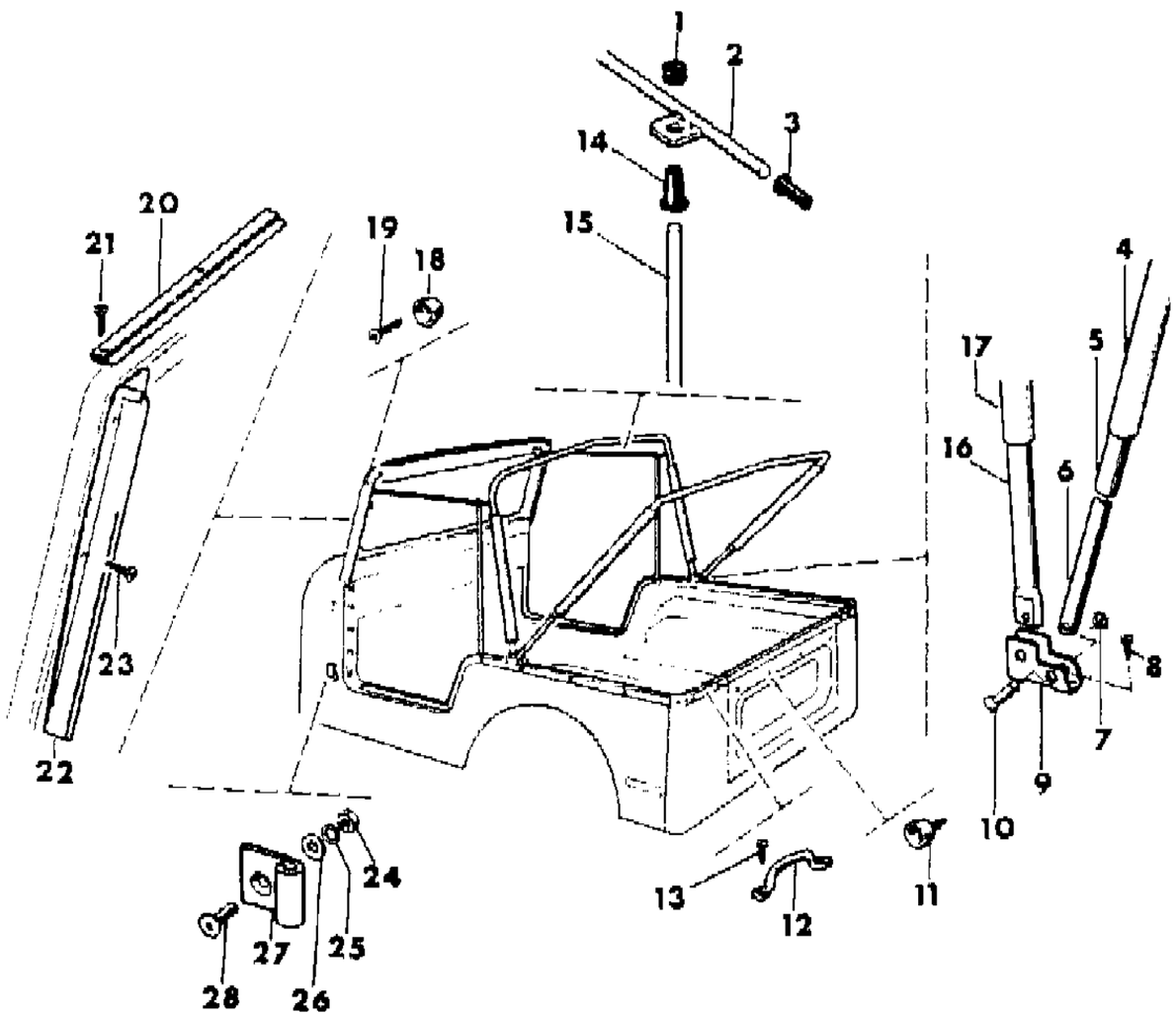

ITEM	PART NUMBER	QTY	BODY	MODEL	DESCRIPTION
1	J207 7029	2			GROMMET
2					ROD, Support
	J812 3811	2		85	
	J812 3821	2		87	
3	J207 4300	4			CAP, End
4					COVER, Roof Bow
	J812 3726	1			Black
	8351 0078	1		87	Garnet
	8350 1505	1		87	Honey
	J813 1287	1			Nutmeg
	J813 1406	1			Slate Blue
5					BOW, Rear Roof
	J813 1347	1		85	
	J813 1348	1		87	
6					EXTENSION, Roof Bow
	J545 6493	2		85	
	J545 8872	2		87	
7	J207 7031	2			RING
8	J812 0052	2			SCREW
9	J545 6478	2			BRACKET
10	J812 9910	2			BOLT
11	J207 4037	AR			SNAP
12	5501 3668	2			LOOP, Footman
13	S016 3470	4			SCREW
14	J546 0843	2			CUP
15					ROD, Support
	J812 3838-9	1		85	
	J812 3840-1	1		87	
16					BOW, Front Roof
	J813 1349	1		85	
	J813 1350	1		87	
17					COVER, Roof Bow
	J812 3854	1		87	Black
	8351 0075	1		87	Garnet
	8351 0504	1		87	Honey
	J813 1292	1		87	Nutmeg
	J813 1405	1		87	Slate Blue
18	J812 3724	AR			SNAP
19	J400 5764	AR			SCREW

MODEL CODES

16=Cherokee 2 Dr.(1981-83)
17=Cherokee 2 Dr.(1981-83)
73=Cherokee 2WD-2 Dr.(1984-86)
74=Cherokee 2WD-4 Dr.(1984-86)
18=Cherokee 4 Dr.(1981-83)
77=Cherokee 4WD-2 Dr.(1984-86)
78=Cherokee 4WD-4 Dr.(1984-86)
85=CJ-5 (1981-83)
86=CJ-6(1981)
87=CJ-7(1981-86)
88=CJ-8, Scrambler(1981-86)
64=Comanche 2WD-6 Ft. Box(1986)
66=Comanche 2WD-7 Ft. Box(1986)
63=Comanche 4WD-6 Ft. Box(1986)
65=Comanche 4WD-7 Ft. Box(1986)
15=Grand Wagoneer 4 Dr.(1984-86)
25=J-10 Truck 7 Ft. Box(1981-84)
26=J10 Truck 8 Ft. Box(1981-86)
27=J-20 Truck 8 Ft. Box(1981-86)
15=Wagoneer 4 Dr.(1981-83)
75=Wagoneer 4WD-4 Dr.(1984-86)

BODY
CJ=CJ-5, CJ-6, CJ-7, CJ-8, Scrambler(1981-86)
MJ=Comanche Pickup(1986)

STYLES
SJ=Wagoneer(1981-83), Grand Wagoneer(1984-86), Cherokee(1981-83), J-10, J-20(1981-86)
XJ=Wagoneer(1984-86), Cherokee(1984-86)

AR = Use as Required - = Non Illustrated Part P.A.R. = Paint as Required

« RETURN TO GROUP INDEX »

SOFT TOP HARDWARE WITH FULL SOFT DOORS CJ-5,7
Figure 23A-1700

81J69 1700

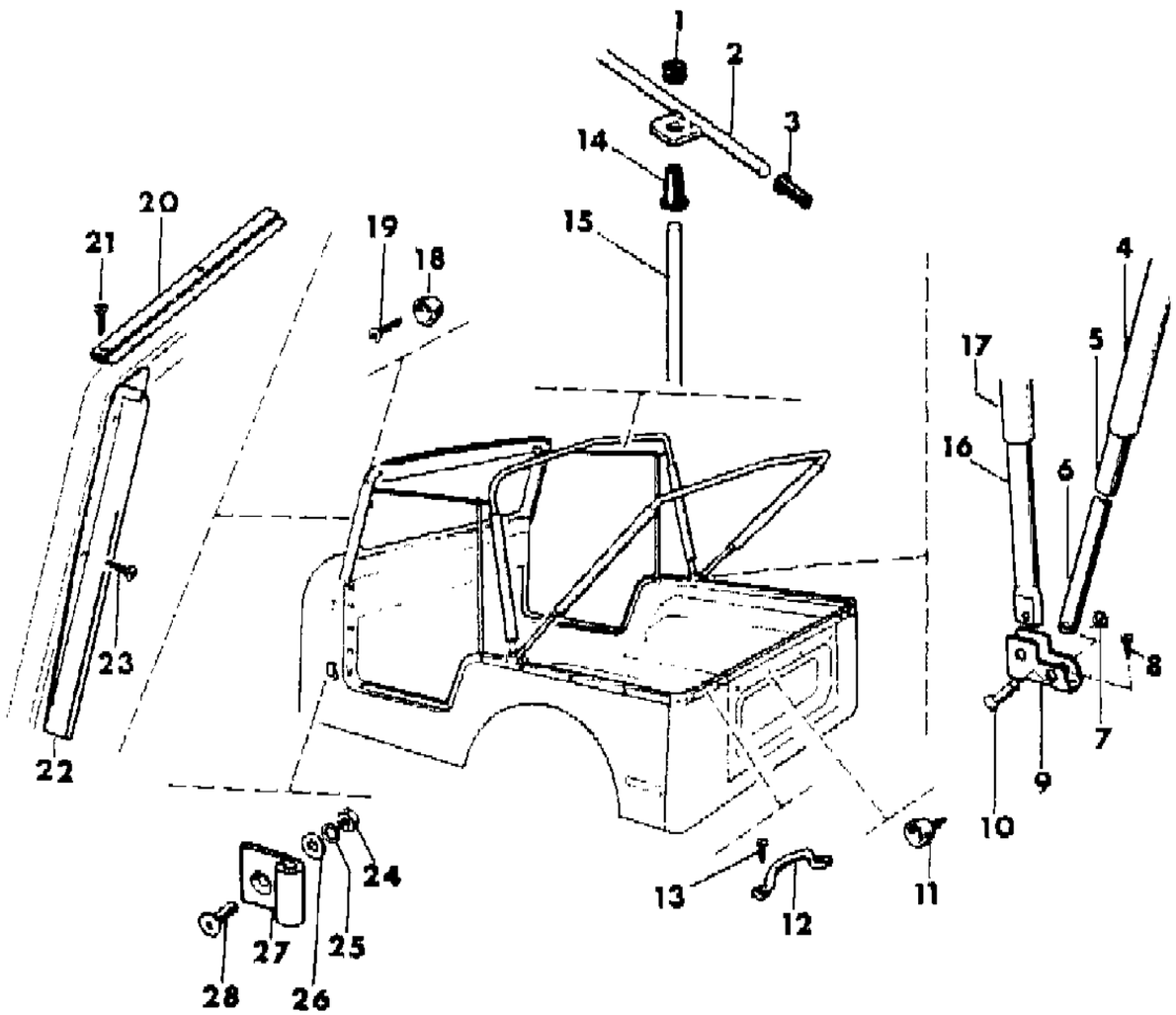

ITEM	PART NUMBER	QTY	BODY	MODEL	DESCRIPTION
20	J576 0259	1			FORMER, Front ***
21	J400 5690	3			SCREW
22	J545 8874-5	1			BRACKET, Front Former
23	J941 4732	4			SCREW
24	J012 0376	2			NUT
25	S013 8538	2			WASHER
26	J400 1093	2			WASHER
27	J812 3927	2			BRACKET, Hinge
28	J400 4956	2			SCREW

MODEL CODES
16=Cherokee 2 Dr.(1981-83)
17=Cherokee 2 Dr.(1981-83)
73=Cherokee 2WD-2 Dr.(1984-86)
74=Cherokee 2WD-4 Dr.(1984-86)
18=Cherokee 4 Dr.(1981-83)
77=Cherokee 4WD-2 Dr.(1984-86)
78=Cherokee 4WD-4 Dr.(1984-86)
85=CJ-5 (1981-83)
86=CJ-6(1981)
87=CJ-7(1981-86)
88=CJ-8, Scrambler(1981-86)
64=Comanche 2WD-6 Ft. Box(1986)
66=Comanche 2WD-7 Ft. Box(1986)
63=Comanche 4WD-6 Ft. Box(1986)
65=Comanche 4WD-7 Ft. Box(1986)
15=Grand Wagoneer 4 Dr.(1984-86)
25=J-10 Truck 7 Ft. Box(1981-84)
26=J10 Truck 8 Ft. Box(1981-86)
27=J-20 Truck 8 Ft. Box(1981-86)
15=Wagoneer 4 Dr.(1981-83)
75=Wagoneer 4WD-4 Dr.(1984-86)

BODY
CJ=CJ-5, CJ-6, CJ-7, CJ-8, Scrambler(1981-86)
MJ=Comanche Pickup(1986)

STYLES
SJ=Wagoneer(1981-83), Grand Wagoneer(1984-86), Cherokee(1981-83), J-10, J-20(1981-86)
XJ=Wagoneer(1984-86), Cherokee(1984-86)

AR = Use as Required - = Non Illustrated Part P.A.R. = Paint as Required

« RETURN TO GROUP INDEX

SOFT TOP AND WINDOWS WITH FULL SOFT TOP CJ-5,7
Figure 23A-1800

81J69 1800

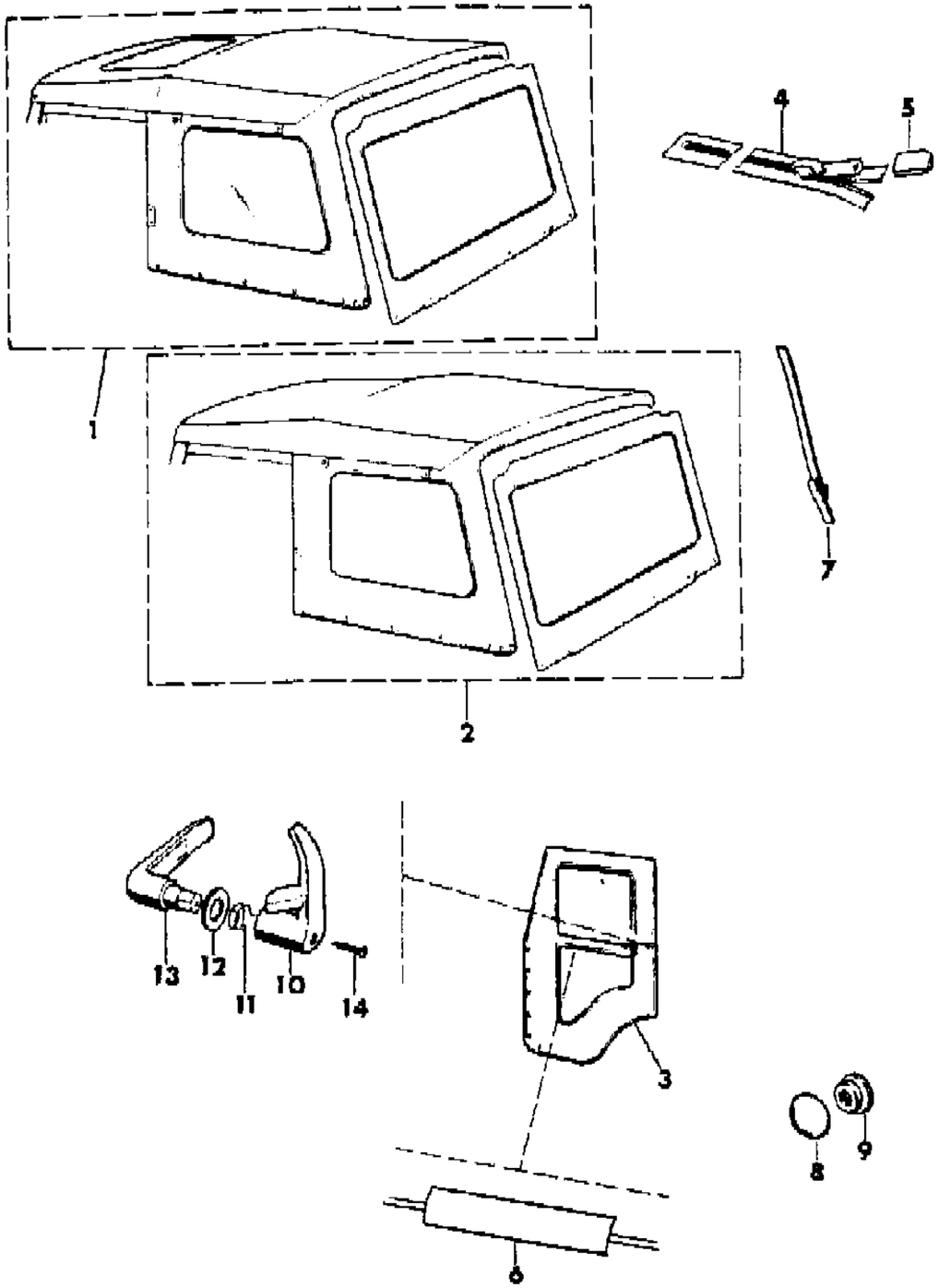

ITEM	PART NUMBER	QTY	BODY	MODEL	DESCRIPTION
1					TOP, Soft, Sky-Viewer
	J812 9935	1		85	Black
	J812 9937	1		85	Blue Levi
	J813 1282	1		85	Nutmeg
	J813 1399	1		85	Slate Blue
	J812 9934	1		85	White
	J812 9914	1		87	Black
	J812 9921	1		87	Blue Levi
	8351 0079	1		87	Garnet
	8350 1523	1		87	Honey
	J813 1284	1		87	Nutmeg
	J813 1401	1		87	Slate Blue
	J812 9918	1		87	White
2					TOP, Soft
	J812 9931	1		85	Black
	J812 9933	1		85	Blue Levi
	J813 1281	1		85	Nutmeg
	J813 1396	1		85	Slate Blue
	J812 9930	1		85	White
	J812 9915	1		87	Black
	J812 9917	1		87	Blue Levi
	8351 0074	1		87	Garnet
	8350 1501	1		87	Honey
	J813 1283	1		87	Nutmeg
	J813 1400	1		87	Slate Blue
	J812 9914	1		87	White
3					DOOR, Soft
	J812 9940-1	1		85	Black
	J812 9944-5	1		85	Blue Levi
	J813 1288-9	1		85	Nutmeg
					Slate Blue
	J813 1397	1		85	Right
	J813 1398	1		85	Left
	J812 9938-9	1		85	White
	J812 9924-5	1		87	Black
	J812 9928-9	1		87	Blue Levi
	8351 0086-7	1		87	Garnet
	8350 1502-3	1		87	Honey
	J813 1290-1	1		87	Nutmeg

MODEL CODES

16=Cherokee 2 Dr.(1981-83)
17=Cherokee 2 Dr.(1981-83)
73=Cherokee 2WD-2 Dr.(1984-86)
74=Cherokee 2WD-4 Dr.(1984-86)
18=Cherokee 4 Dr.(1981-83)
77=Cherokee 4WD-2 Dr.(1984-86)
78=Cherokee 4WD-4 Dr.(1984-86)
85=CJ-5 (1981-83)
86=CJ-6(1981)
87=CJ-7(1981-86)
88=CJ-8, Scrambler(1981-86)
64=Comanche 2WD-6 Ft. Box(1986)
66=Comanche 2WD-7 Ft. Box(1986)
63=Comanche 4WD-6 Ft. Box(1986)
65=Comanche 4WD-7 Ft. Box(1986)
15=Grand Wagoneer 4 Dr.(1984-86)
25=J-10 Truck 7 Ft. Box(1981-84)
26=J10 Truck 8 Ft. Box(1981-86)
27=J-20 Truck 8 Ft. Box(1981-86)
15=Wagoneer 4 Dr.(1981-83)
75=Wagoneer 4WD-4 Dr.(1984-86)

BODY

CJ=CJ-5, CJ-6, CJ-7, CJ-8, Scrambler(1981-86)
MJ=Comanche Pickup(1986)

STYLES

SJ=Wagoneer(1981-83), Grand Wagoneer(1984-86), Cherokee(1981-83), J-10, J-20(1981-86)
XJ=Wagoneer(1984-86), Cherokee(1984-86)

AR = Use as Required - = Non Illustrated Part P.A.R. = Paint as Required

SOFT TOP AND WINDOWS WITH FULL SOFT TOP CJ-5,7
Figure 23A-1800

81J69 1800

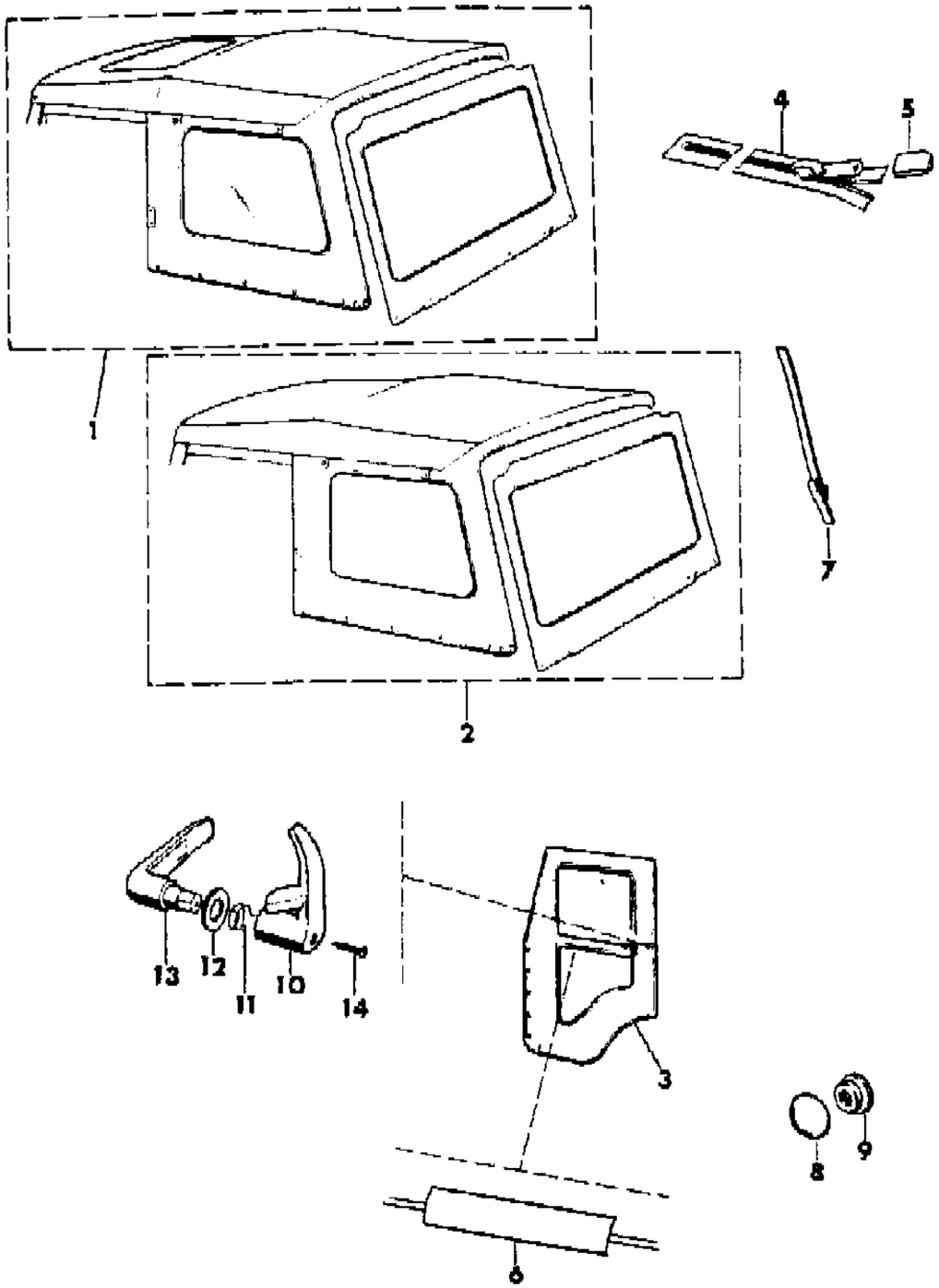

ITEM	PART NUMBER	QTY	BODY	MODEL	DESCRIPTION
					Slate Blue
	J813 1383	1		87	Right
	J813 1384	1		87	Left
	J812 9922-3	1		87	White
4					ZIPPER ***
	J812 3933	1		85	Door, Beige
	J812 3934	1		85	Door, Black
	J812 3937	1		87	Door, Beige
	J812 3938	1		87	Door, Black
	J812 3935	1			Rear Curtain, Beige
	J812 3936	1			Rear Curtain, Black
5	J812 3725	1			COVER, Zipper
6	J813 1333	2			TRIM, Door
7					STRAP
	J813 1409	1			Beige
	J813 1408	1			Black
8	J812 3939	AR			SNAP
9	J812 3940	AR			SNAP
10	8350 0212-3	1			HANDLE
11	J812 3718-9	1			SPRING
12	J812 3720	2			WASHER
13	8350 0214	2			HANDLE
14	J812 3721	2			SCREW

MODEL CODES

16=Cherokee 2 Dr.(1981-83)
17=Cherokee 2 Dr.(1981-83)
73=Cherokee 2WD-2 Dr.(1984-86)
74=Cherokee 2WD-4 Dr.(1984-86)
18=Cherokee 4 Dr.(1981-83)
77=Cherokee 4WD-2 Dr.(1984-86)
78=Cherokee 4WD-4 Dr.(1984-86)
85=CJ-5 (1981-83)
86=CJ-6(1981)
87=CJ-7(1981-86)
88=CJ-8, Scrambler(1981-86)
64=Comanche 2WD-6 Ft. Box(1986)
66=Comanche 2WD-7 Ft. Box(1986)
63=Comanche 4WD-6 Ft. Box(1986)
65=Comanche 4WD-7 Ft. Box(1986)
15=Grand Wagoneer 4 Dr.(1984-86)
25=J-10 Truck 7 Ft. Box(1981-84)
26=J10 Truck 8 Ft. Box(1981-86)
27=J-20 Truck 8 Ft. Box(1981-86)
15=Wagoneer 4 Dr.(1981-83)
75=Wagoneer 4WD-4 Dr.(1984-86)

BODY

CJ=CJ-5, CJ-6, CJ-7, CJ-8, Scrambler(1981-86)
MJ=Comanche Pickup(1986)

STYLES

SJ=Wagoneer(1981-83), Grand Wagoneer(1984-86), Cherokee(1981-83), J-10, J-20(1981-86)
XJ=Wagoneer(1984-86), Cherokee(1984-86)

AR = Use as Required - = Non Illustrated Part P.A.R. = Paint as Required

« RETURN TO GROUP INDEX

SOFT TOP HARDWARE WITH FULL HARD DOORS CJ-7
Figure 23A-1900

81J69 1900

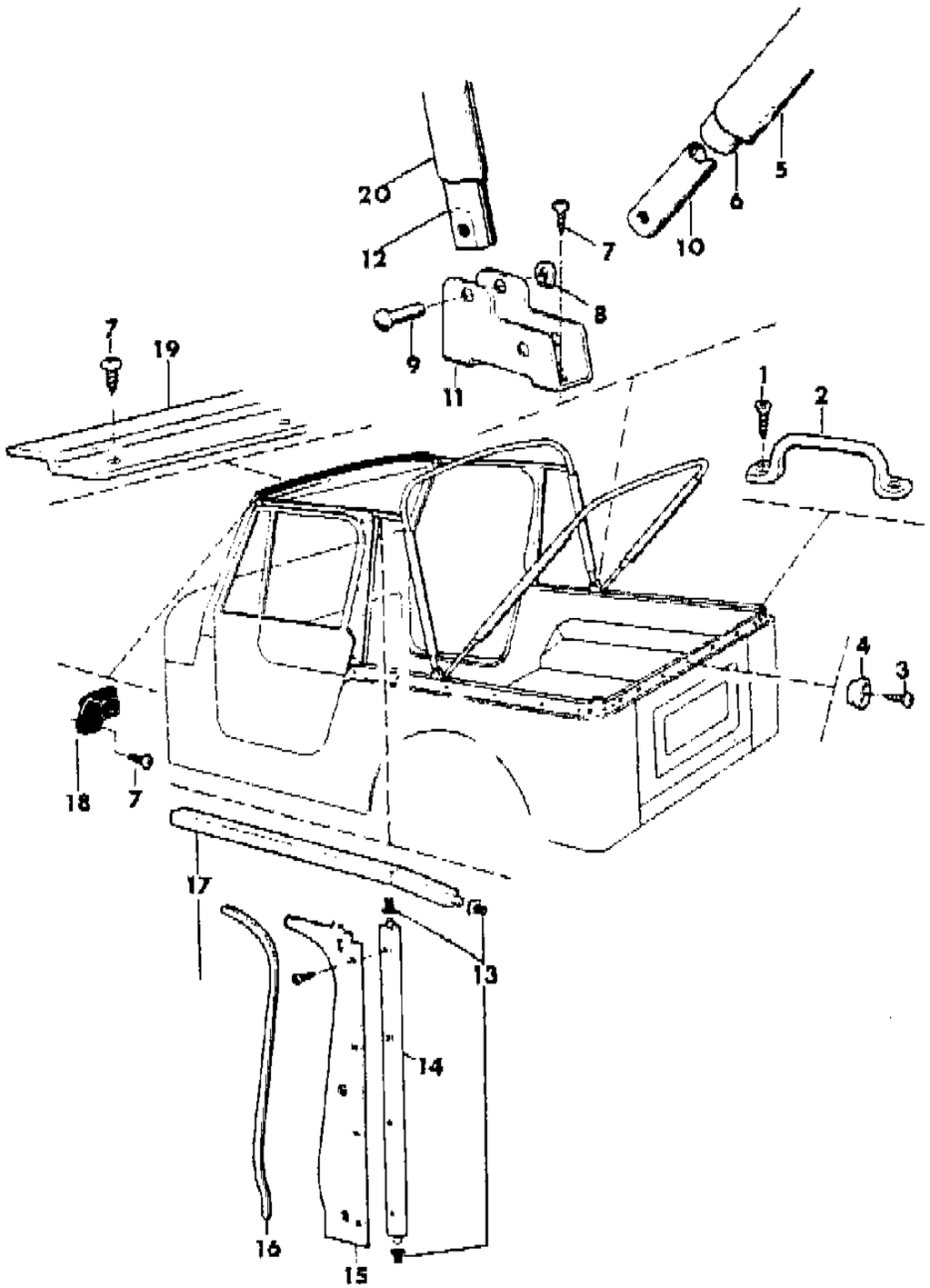

ITEM	PART NUMBER	QTY	BODY	MODEL	DESCRIPTION
1	S016 3470	4			SCREW
2	5501 3668	2			LOOP, Footman
3	J400 5777	AR			SCREW
4					SNAP
	J812 3724	AR			Metal
	J813 1407	AR			Plastic
5					COVER, Roof Bow
	J812 3726	1			Black
	8351 0078	1			Garnet
	8350 1505	1			Honey
	J813 1287	1			Nutmeg
	J813 1406	1			Slate Blue
6	J546 9408	1			BOW, Rear Roof
7	J812 0052	AR			SCREW
8	J207 7031	4			RING
9	J812 3727	2			PIN
10	J545 8872	2			EXTENSION, Roof Bow
11	J545 6478	2			BRACKET
12	J813 1350	1			BOW, Front Roof
13	J813 2808	6			CAP, End
14	J813 2798	2			ROD, Support
15	J813 2800-1	1			SUPPORT
16	J813 2809	2			ROD
17	J813 2799	2			ROD, Adjusting
18					SOCKET
	J575 4694	1			Right
	J575 4693	1			Left
19	J576 0259	1			FORMER, Front ***
20					COVER, Roof Bow
	J812 3854	1			Black
	8350 0075	1			Garnet
	8250 1504	1			Honey
	J813 1292	1			Nutmeg
	J813 1405	1			Slate Blue

MODEL CODES
16=Cherokee 2 Dr.(1981-83)
17=Cherokee 2 Dr.(1981-83)
73=Cherokee 2WD-2 Dr.(1984-86)
74=Cherokee 2WD-4 Dr.(1984-86)
18=Cherokee 4 Dr.(1981-83)
77=Cherokee 4WD-2 Dr.(1984-86)
78=Cherokee 4WD-4 Dr.(1984-86)
85=CJ-5 (1981-83)
86=CJ-6(1981)
87=CJ-7(1981-86)
88=CJ-8, Scrambler(1981-86)
64=Comanche 2WD-6 Ft. Box(1986)
66=Comanche 2WD-7 Ft. Box(1986)
63=Comanche 4WD-6 Ft. Box(1986)
65=Comanche 4WD-7 Ft. Box(1986)
15=Grand Wagoneer 4 Dr.(1984-86)
25=J-10 Truck 7 Ft. Box(1981-84)
26=J10 Truck 8 Ft. Box(1981-86)
27=J-20 Truck 8 Ft. Box(1981-86)
15=Wagoneer 4 Dr.(1981-83)
75=Wagoneer 4WD-4 Dr.(1984-86)

BODY
CJ=CJ-5, CJ-6, CJ-7, CJ-8, Scrambler(1981-86)
MJ=Comanche Pickup(1986)

STYLES
SJ=Wagoneer(1981-83), Grand Wagoneer(1984-86), Cherokee(1981-83), J-10, J-20(1981-86)
XJ=Wagoneer(1984-86), Cherokee(1984-86)

AR = Use as Required - = Non Illustrated Part P.A.R. = Paint as Required

« RETURN TO GROUP INDEX

SOFT TOP AND WINDOWS WITH FULL HARD DOORS CJ-7
Figure 23A-2000

81J69 2000

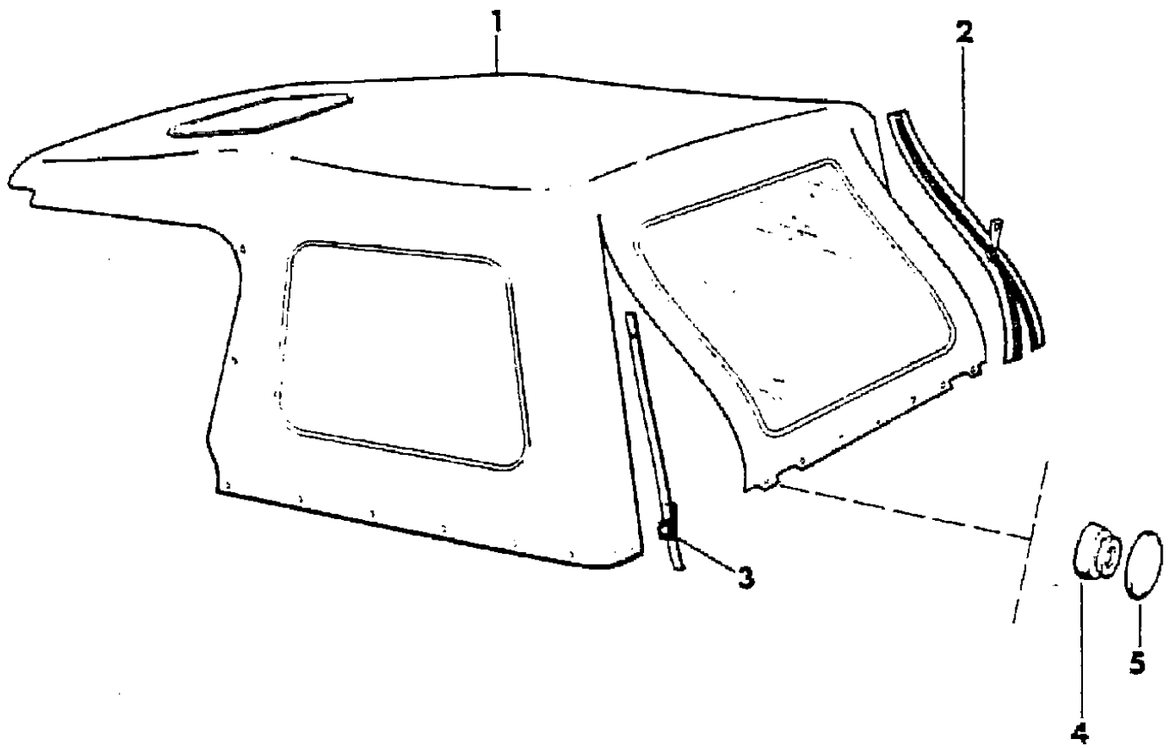

ITEM	PART NUMBER	QTY	BODY	MODEL	DESCRIPTION
1					TOP, Soft
	J813 2795	1			Black, Sky-Viewer
	J813 2797	1			Blue Levi, Sky-Viewer
	J813 1286	1			Nutmeg, Sky-Viewer
	J813 2794	1			White, Sky-Viewer
	J813 2791	1			Black
	J813 2793	1			Blue Levi
	8351 0080	1			Garnet
	8350 1522	1			Honey
	J813 1285	1			Nutmeg
	J813 1402	1			Slate Blue
	J813 2790	1			White
2					ZIPPER, Rear Curtain ***
	J813 1112	1			Beige
	J813 1111	1			Black
3					STRAP
	J813 1409	1			Beige
	J813 1408	1			Black
4					SNAP
	J812 3940	AR			Metal, Medium Action
	J812 3941	AR			Metal, Hard Action
	J813 1389	AR			Plastic
5	J812 3939	AR			SNAP

MODEL CODES

16=Cherokee 2 Dr.(1981-83)
17=Cherokee 2 Dr.(1981-83)
73=Cherokee 2WD-2 Dr.(1984-86)
74=Cherokee 2WD-4 Dr.(1984-86)
18=Cherokee 4 Dr.(1981-83)
77=Cherokee 4WD-2 Dr.(1984-86)
78=Cherokee 4WD-4 Dr.(1984-86)
85=CJ-5 (1981-83)
86=CJ-6(1981)
87=CJ-7(1981-86)
88=CJ-8, Scrambler(1981-86)
64=Comanche 2WD-6 Ft. Box(1986)
66=Comanche 2WD-7 Ft. Box(1986)
63=Comanche 4WD-6 Ft. Box(1986)
65=Comanche 4WD-7 Ft. Box(1986)
15=Grand Wagoneer 4 Dr.(1984-86)
25=J-10 Truck 7 Ft. Box(1981-84)
26=J10 Truck 8 Ft. Box(1981-86)
27=J-20 Truck 8 Ft. Box(1981-86)
15=Wagoneer 4 Dr.(1981-83)
75=Wagoneer 4WD-4 Dr.(1984-86)

BODY
CJ=CJ-5, CJ-6, CJ-7, CJ-8, Scrambler(1981-86)
MJ=Comanche Pickup(1986)

STYLES
SJ=Wagoneer(1981-83), Grand Wagoneer(1984-86), Cherokee(1981-83), J-10, J-20(1981-86)
XJ=Wagoneer(1984-86), Cherokee(1984-86)

AR = Use as Required - = Non Illustrated Part P.A.R. = Paint as Required

« RETURN TO GROUP INDEX

SOFT HALF TOP HARDWARE WITH FULL SOFT DOORS SCRAMBLER
Figure 23A-2100

81J69 2100

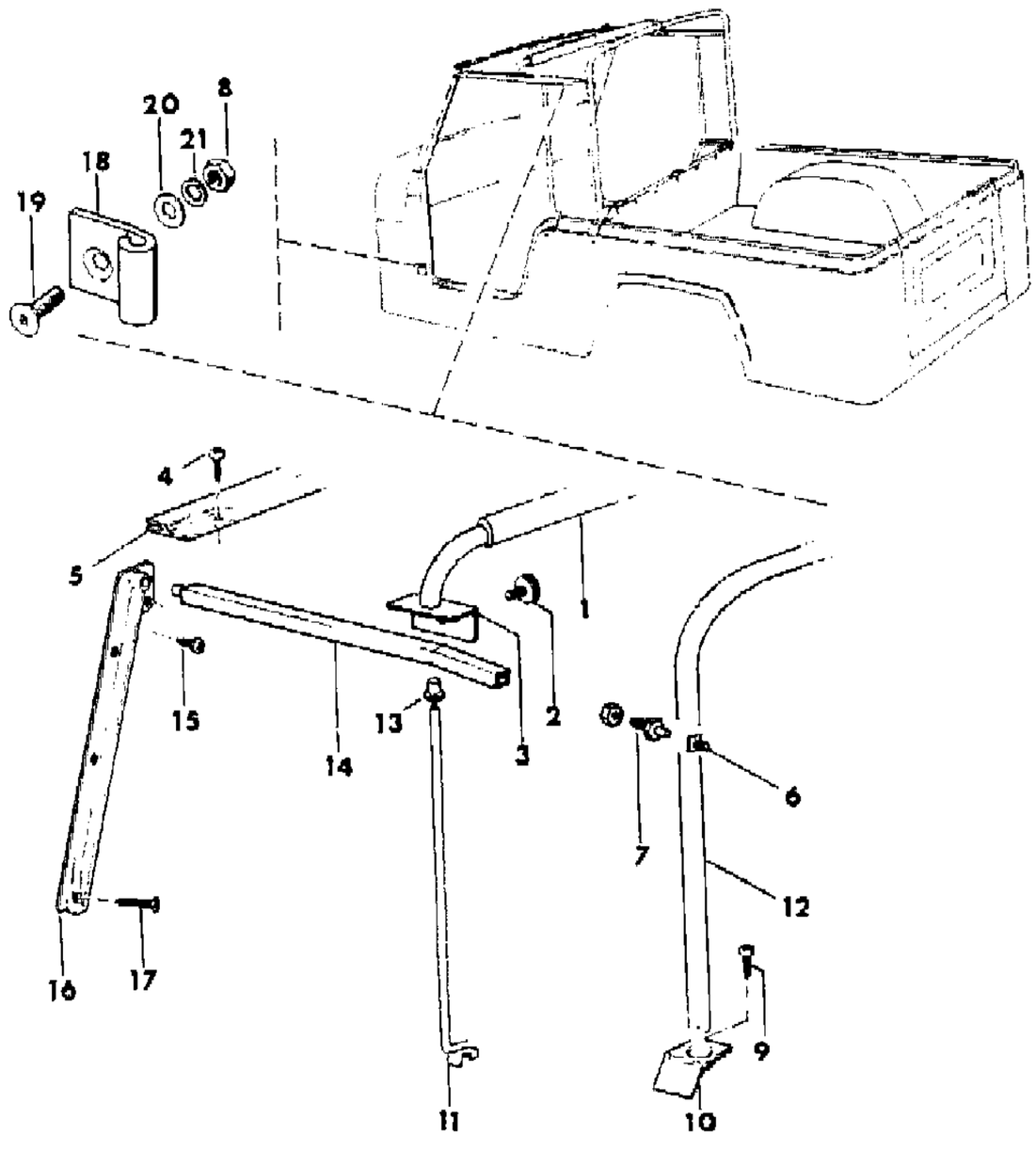

ITEM	PART NUMBER	QTY	BODY	MODEL	DESCRIPTION
1					COVER, Roof Bow
	J813 1311	1			Black
	J813 1312	1			Blue
	8351 0083	1			Garnet
	8350 1526	1			Honey
	J813 1313	1			Nutmeg
	J813 1344	1			Slate Blue
	J813 1310	1			White
2	J813 1293	2			SCREW
3	J813 1343	1			BOW, Front Roof
4	J400 5690	3			SCREW
5	J576 0259	1			FORMER, Front ***
6	J813 2808	2			CAP, End
7	J813 1387	2			ADJUSTER
8	J012 0376	2			NUT
9	J812 0052	2			SCREW
10	J576 0240-1	1			SOCKET
11	J812 3840-1	1			ROD, Support
12	J813 1341	1			BOW, Rear Roof
13	J546 0843	2			CAP, End
14	J813 1385	2			ROD, Adjusting
15	J941 4732	4			SCREW
16	J545 8874-5	1			BRACKET, Adjusting Rod
17	J813 1323	6			SCREW
18					BRACKET, Hinge
	J545 7098	1			Right
	J545 7097	1			Left
19	J400 4956	2			SCREW
20	J400 1093	2			WASHER
21	S013 8538	2			WASHER

MODEL CODES

16=Cherokee 2 Dr.(1981-83)	78=Cherokee 4WD-4 Dr.(1984-86)	64=Comanche 2WD-6 Ft. Box(1986)	25=J-10 Truck 7 Ft. Box(1981-84)
17=Cherokee 2 Dr.(1981-83)	85=CJ-5 (1981-83)	66=Comanche 2WD-7 Ft. Box(1986)	26=J10 Truck 8 Ft. Box(1981-86)
73=Cherokee 2WD-2 Dr.(1984-86)	86=CJ-6(1981)	63=Comanche 4WD-6 Ft. Box(1986)	27=J-20 Truck 8 Ft. Box(1981-86)
74=Cherokee 2WD-4 Dr.(1984-86)	87=CJ-7(1981-86)	65=Comanche 4WD-7 Ft. Box(1986)	15=Wagoneer 4 Dr.(1981-83)
18=Cherokee 4 Dr.(1981-83)	88=CJ-8, Scrambler(1981-86)	15=Grand Wagoneer 4 Dr.(1984-86)	75=Wagoneer 4WD-4 Dr.(1984-86)
77=Cherokee 4WD-2 Dr.(1984-86)			

BODY
CJ=CJ-5, CJ-6, CJ-7, CJ-8, Scrambler(1981-86)
MJ=Comanche Pickup(1986)

STYLES
SJ=Wagoneer(1981-83), Grand Wagoneer(1984-86), Cherokee(1981-83), J-10, J-20(1981-86)
XJ=Wagoneer(1984-86), Cherokee(1984-86)

AR = Use as Required - = Non Illustrated Part P.A.R. = Paint as Required

« RETURN TO GROUP INDEX

SOFT HALF TOP AND WINDOWS WITH FULL SOFT DOORS SCRAMBLER
Figure 23A-2200

81J69 2200

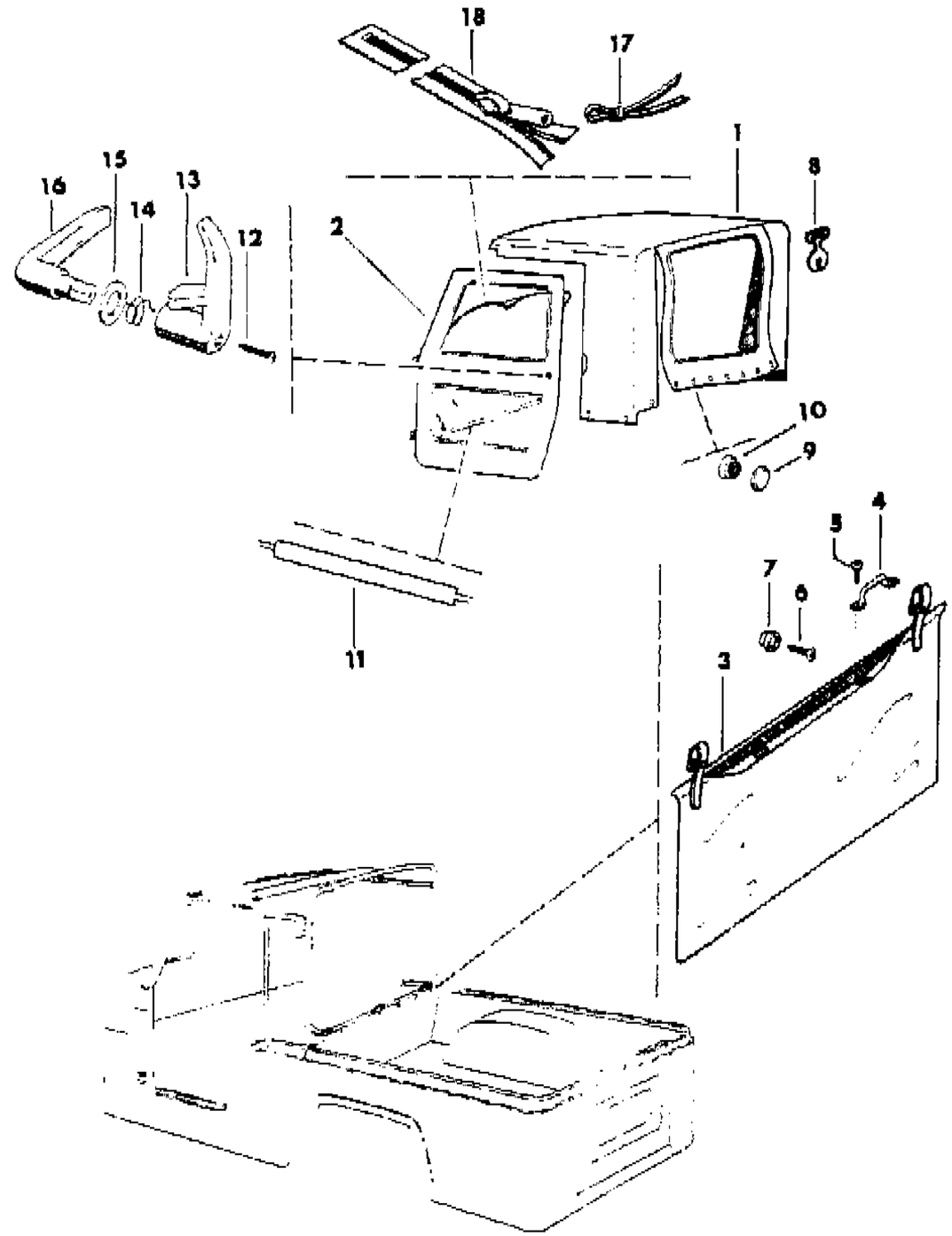

ITEM	PART NUMBER	QTY	BODY	MODEL	DESCRIPTION
1					TOP, Soft
					Without 3 Point Belt System
	J813 1295	1			Black
	J813 1296	1			Blue
	J813 1297	1			Nutmeg
	J813 1345	1			Slate Blue
	J813 1294	1			White
					With 3 Point Belt System
	J813 1465	1			Black
	8351 0084	1			Garnet
	8350 1524	1			Honey
	J813 1467	1			Nutmeg
	J813 1466	1			Slate Blue
	J813 1468	1			White
2					DOOR, Soft
	J812 9924-5	1			Black
	J812 9928-9	1			Blue
	8351 0086-7	1			Garnet
	8350 1502-3	1			Honey
	J813 1290-1	1			Nutmeg
					Slate Blue
	J813 1383	1			Right
	J813 1384	1			Left
	J812 9922-3	1			White
3					BAG, Storage
	J813 1337	1			Black
	J813 1338	1			Blue
	8351 0085	1			Garnet
	8350 1525	1			Honey
	J813 1339	1			Nutmeg
	J813 1340	1			Slate Blue
	J813 1336	1			White
4	J813 1365	AR			LOOP Footman ***
5	S016 3470	AR			SCREW
6	J400 5777	AR			SCREW
7	J812 3724	AR			SNAP
8	J576 2137	AR			RETAINER
9	J812 3939	AR			SNAP
10	J812 3940	AR			SNAP

MODEL CODES

16=Cherokee 2 Dr.(1981-83)
17=Cherokee 2 Dr.(1981-83)
73=Cherokee 2WD-2 Dr.(1984-86)
74=Cherokee 2WD-4 Dr.(1984-86)
18=Cherokee 4 Dr.(1981-83)
77=Cherokee 4WD-2 Dr.(1984-86)
78=Cherokee 4WD-4 Dr.(1984-86)
85=CJ-5 (1981-83)
86=CJ-6(1981)
87=CJ-7(1981-86)
88=CJ-8, Scrambler(1981-86)
64=Comanche 2WD-6 Ft. Box(1986)
66=Comanche 2WD-7 Ft. Box(1986)
63=Comanche 4WD-6 Ft. Box(1986)
65=Comanche 4WD-7 Ft. Box(1986)
15=Grand Wagoneer 4 Dr.(1984-86)
25=J-10 Truck 7 Ft. Box(1981-84)
26=J10 Truck 8 Ft. Box(1981-86)
27=J-20 Truck 8 Ft. Box(1981-86)
15=Wagoneer 4 Dr.(1981-83)
75=Wagoneer 4WD-4 Dr.(1984-86)

BODY
CJ=CJ-5, CJ-6, CJ-7, CJ-8, Scrambler(1981-86)
MJ=Comanche Pickup(1986)

STYLES
SJ=Wagoneer(1981-83), Grand Wagoneer(1984-86), Cherokee(1981-83), J-10, J-20(1981-86)
XJ=Wagoneer(1984-86), Cherokee(1984-86)

AR = Use as Required - = Non Illustrated Part P.A.R. = Paint as Required

« RETURN TO GROUP INDEX »

SOFT HALF TOP AND WINDOWS WITH FULL SOFT DOORS SCRAMBLER
Figure 23A-2200

81J69 2200

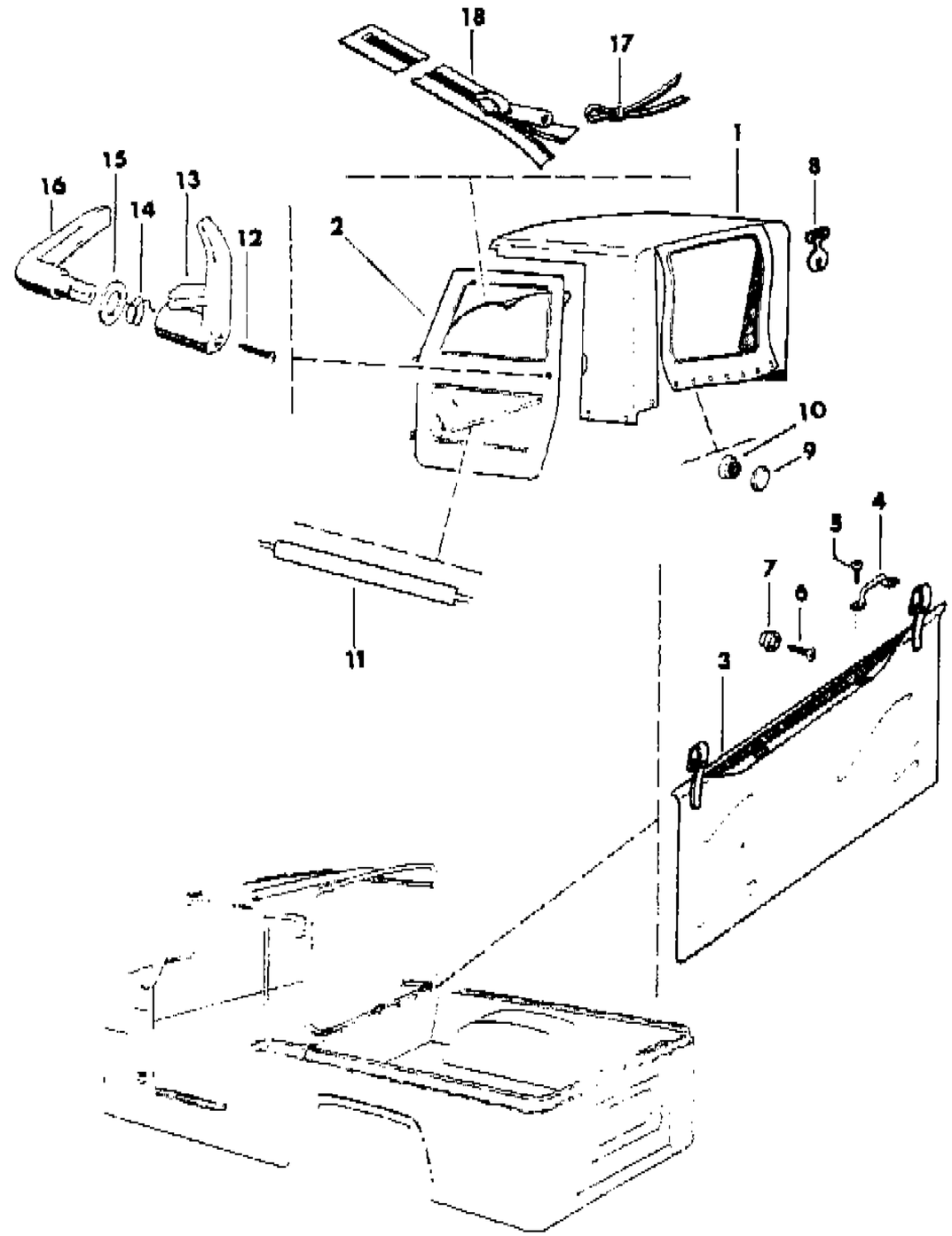

ITEM	PART NUMBER	QTY	BODY	MODEL	DESCRIPTION
11	J813 1333	2			TRIM, Door
12	J812 3721	2			SCREW
13	8350 0212-3	1			HANDLE
14	J812 3718-9	1			SPRING
15	J812 3720	2			WASHER
16	8350 0214	2			HANDLE
17	J813 1272	1			PULL, Zipper ***
18					ZIPPER, Door ***
	J813 1110	1			Beige
	J813 1111	1			Black

This zipper is 28" long, make it work any way you can, O.E. zipper is about 70" long. (c) End of decal is open

MODEL CODES

16=Cherokee 2 Dr.(1981-83)
17=Cherokee 2 Dr.(1981-83)
73=Cherokee 2WD-2 Dr.(1984-86)
74=Cherokee 2WD-4 Dr.(1984-86)
18=Cherokee 4 Dr.(1981-83)
77=Cherokee 4WD-2 Dr.(1984-86)
78=Cherokee 4WD-4 Dr.(1984-86)
85=CJ-5 (1981-83)
86=CJ-6(1981)
87=CJ-7(1981-86)
88=CJ-8, Scrambler(1981-86)
64=Comanche 2WD-6 Ft. Box(1986)
66=Comanche 2WD-7 Ft. Box(1986)
63=Comanche 4WD-6 Ft. Box(1986)
65=Comanche 4WD-7 Ft. Box(1986)
15=Grand Wagoneer 4 Dr.(1984-86)
25=J-10 Truck 7 Ft. Box(1981-84)
26=J10 Truck 8 Ft. Box(1981-86)
27=J-20 Truck 8 Ft. Box(1981-86)
15=Wagoneer 4 Dr.(1981-83)
75=Wagoneer 4WD-4 Dr.(1984-86)

BODY
CJ=CJ-5, CJ-6, CJ-7, CJ-8, Scrambler(1981-86)
MJ=Comanche Pickup(1986)

STYLES
SJ=Wagoneer(1981-83), Grand Wagoneer(1984-86), Cherokee(1981-83), J-10, J-20(1981-86)
XJ=Wagoneer(1984-86), Cherokee(1984-86)

AR = Use as Required - = Non Illustrated Part P.A.R. = Paint as Required

« RETURN TO GROUP INDEX

SOFT HALF TOP HARDWARE WITH FULL HARD DOORS SCRAMBLER
Figure 23A-2300

81J69 2300

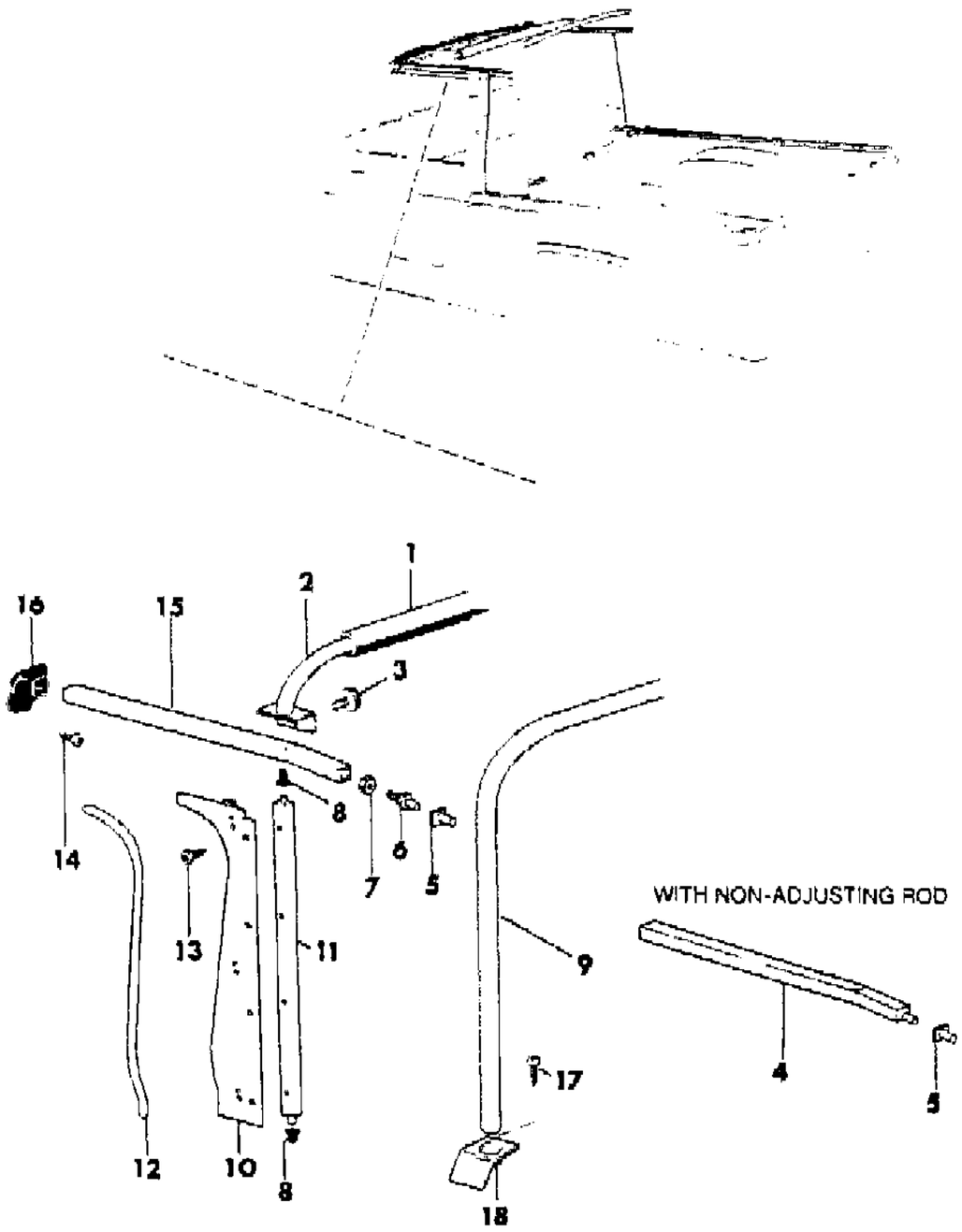

ITEM	PART NUMBER	QTY	BODY	MODEL	DESCRIPTION
1					COVER, Roof Bow
	J813 1311	1			Black
	J813 1312	1			Blue
	8351 0083	1			Garnet
	8350 1525	1			Honey
	J813 1313	1			Nutmeg
	J813 1344	1			Slate Blue
	J813 1310	1			White
2	J813 1343	1			BOW, Front Roof
3	J813 1293	2			SCREW
4	J813 1329	2			ROD, Support
5	J813 2808	2			CAP, End
6	J813 1387	2			ADJUSTER
7	J813 1388	2			NUT
8	8350 1123	4			CAP, End
9	J813 1342	1			BOW, Rear Roof
10	J813 2800-1	1			SUPPORT
11	J813 2798	2			ROD, Support
12	J813 2809	2			ROD
13	J813 1332	8			SCREW
14	J941 4732	2			SCREW
15	J813 1386	2			ROD, Support
16					SOCKET
1	J575 4694				Right
	J575 4693	1			Left
17	J812 0053	2			SCREW
18	J576 0240-1	1			SOCKET

MODEL CODES

16=Cherokee 2 Dr.(1981-83)
17=Cherokee 2 Dr.(1981-83)
73=Cherokee 2WD-2 Dr.(1984-86)
74=Cherokee 2WD-4 Dr.(1984-86)
18=Cherokee 4 Dr.(1981-83)
77=Cherokee 4WD-2 Dr.(1984-86)
78=Cherokee 4WD-4 Dr.(1984-86)
85=CJ-5 (1981-83)
86=CJ-6(1981)
87=CJ-7(1981-86)
88=CJ-8, Scrambler(1981-86)
64=Comanche 2WD-6 Ft. Box(1986)
66=Comanche 2WD-7 Ft. Box(1986)
63=Comanche 4WD-6 Ft. Box(1986)
65=Comanche 4WD-7 Ft. Box(1986)
15=Grand Wagoneer 4 Dr.(1984-86)
25=J-10 Truck 7 Ft. Box(1981-84)
26=J10 Truck 8 Ft. Box(1981-86)
27=J-20 Truck 8 Ft. Box(1981-86)
15=Wagoneer 4 Dr.(1981-83)
75=Wagoneer 4WD-4 Dr.(1984-86)

BODY
CJ=CJ-5, CJ-6, CJ-7, CJ-8, Scrambler(1981-86)
MJ=Comanche Pickup(1986)

STYLES
SJ=Wagoneer(1981-83), Grand Wagoneer(1984-86), Cherokee(1981-83), J-10, J-20(1981-86)
XJ=Wagoneer(1984-86), Cherokee(1984-86)

AR = Use as Required - = Non Illustrated Part P.A.R. = Paint as Required

« RETURN TO GROUP INDEX

SOFT HALF TOP AND WINDOWS WITH FULL HARD DOORS SCRAMBLER
Figure 23A-2400

81J69 2400

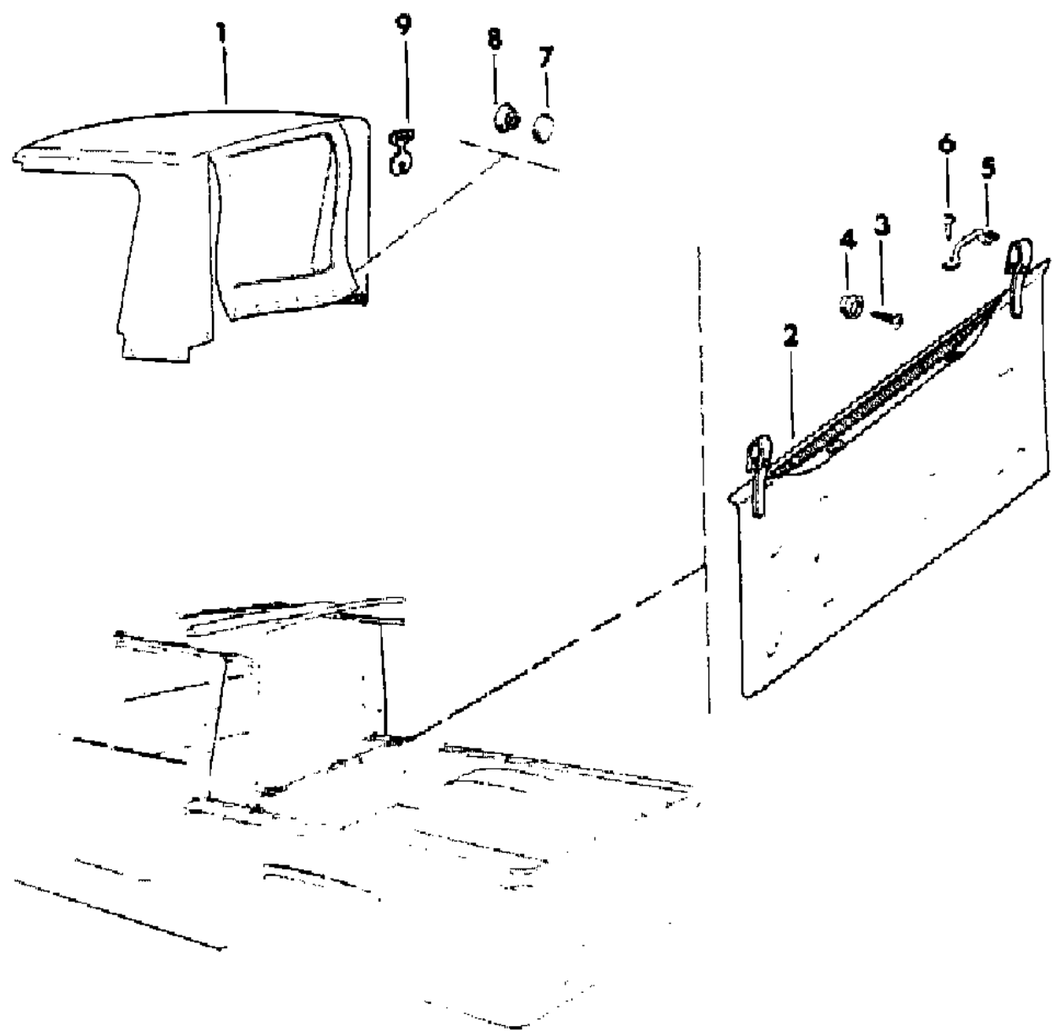

ITEM	PART NUMBER	QTY	BODY	MODEL	DESCRIPTION
1					TOP, Soft
					Without 3-Point Belt System
	J813 1326	1			Black
	J813 1327	1			Blue
	J813 1328	1			Nutmeg
	J813 1346	1			Slate Blue
	J813 1325	1			White
					With 3-Point Belt System
	J813 1469	1			Black
	8351 0081	1			Garnet
	8350 1527	1			Honey
	J813 1471	1			Nutmeg
	J813 1470	1			Slate Blue
	J813 1472	1			White
2					BAG, Storage
	J813 1319	1			Black
	J813 1320	1			Blue
	8351 0082	1			Garnet
	8350 1528	1			Honey
	J813 1321	1			Nutmeg
	J813 1335	1			Slate Blue
	J813 1318	1			White
3	J400 5777	AR			SCREW
4	J812 3724	AR			SNAP
5	J813 1365	AR			LOOP, Footman
6	S016 3470	AR			SCREW
7	J812 3939	AR			SNAP
8					SNAP
	J812 3940	AR			Medium Action
	J812 3941	AR			Hard Action
9	J576 2137	2			RETAINER

MODEL CODES

16=Cherokee 2 Dr.(1981-83)
17=Cherokee 2 Dr.(1981-83)
73=Cherokee 2WD-2 Dr.(1984-86)
74=Cherokee 2WD-4 Dr.(1984-86)
18=Cherokee 4 Dr.(1981-83)
77=Cherokee 4WD-2 Dr.(1984-86)
78=Cherokee 4WD-4 Dr.(1984-86)
85=CJ-5 (1981-83)
86=CJ-6(1981)
87=CJ-7(1981-86)
88=CJ-8, Scrambler(1981-86)
64=Comanche 2WD-6 Ft. Box(1986)
66=Comanche 2WD-7 Ft. Box(1986)
63=Comanche 4WD-6 Ft. Box(1986)
65=Comanche 4WD-7 Ft. Box(1986)
15=Grand Wagoneer 4 Dr.(1984-86)
25=J-10 Truck 7 Ft. Box(1981-84)
26=J10 Truck 8 Ft. Box(1981-86)
27=J-20 Truck 8 Ft. Box(1981-86)
15=Wagoneer 4 Dr.(1981-83)
75=Wagoneer 4WD-4 Dr.(1984-86)

BODY

CJ=CJ-5, CJ-6, CJ-7, CJ-8, Scrambler(1981-86)
MJ=Comanche Pickup(1986)

STYLES

SJ=Wagoneer(1981-83), Grand Wagoneer(1984-86), Cherokee(1981-83), J-10, J-20(1981-86)
XJ=Wagoneer(1984-86), Cherokee(1984-86)

AR = Use as Required - = Non Illustrated Part P.A.R. = Paint as Required

« RETURN TO GROUP INDEX

SOFT TOP HARDWARE WITH FULL HARD DOORS CJ-8 EXPORT
Figure 23A-2500

81J69 2500

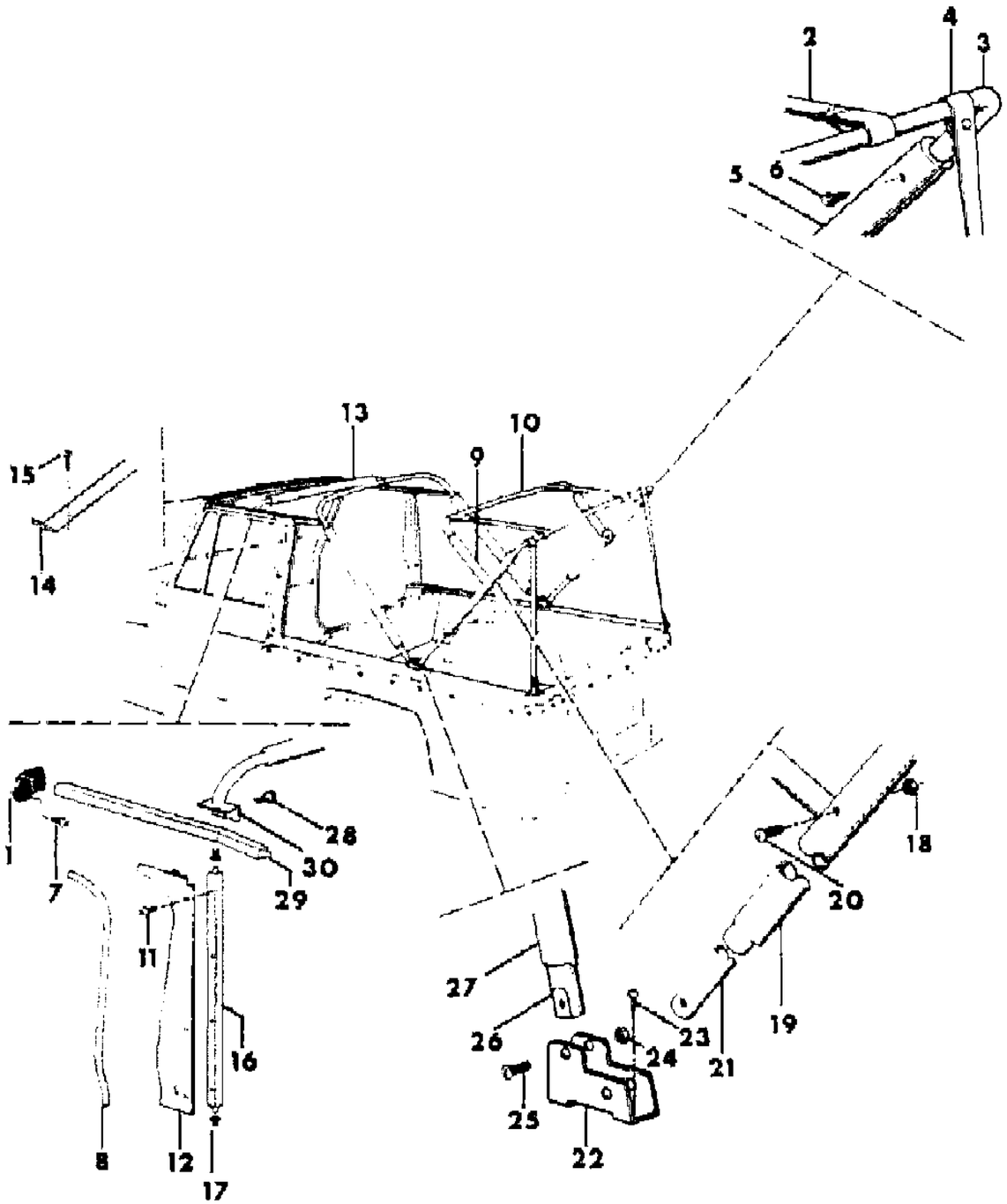

ITEM	PART NUMBER	QTY	BODY	MODEL	DESCRIPTION
1					SOCKET
	J575 4694	1			Right
	J575 4693	1			Left
2	J813 1447	2			STRAP, Black
3	J813 1451	1			BOW, Rear Roof
4	J813 1449	1			STRAP, Black
5	J813 1440	1			COVER, Roof Bow, Black
6	J400 5690	4			SCREW
7	J941 4732	2			SCREW
8	J813 2809	2			ROD
9	J813 1437	1			COVER, Roof Bow, Black
10	J813 1452	1			BOW, Rear Roof
11	J813 1332	8			SCREW
12	J813 2800-1	1			SUPPORT
13					COVER, Roof Bow
	J813 1311	1			Black
	J813 1312	1			Blue
	J813 1313	1			Nutmeg
	J813 1310	1			White
14	J576 0259	1			FORMER, Front ***
15	J400 5690	6			SCREW
16	J813 2798	2			ROD, Support
17	J813 2808	4			CAP, End
18	J813 1457	2			NUT
19	J813 1441	1			COVER, Roof Bow, Black
20	J813 1458	2			SCREW
21	J545 6493	2			EXTENSION, Roof Bow
22	J545 6478	2			BRACKET
23	J812 0052	4			SCREW
24	J813 1457	2			NUT
25	J813 1456	2			SCREW
26	J813 1450	1			BOW, Front Roof
27	J813 1434	1			COVER, Roof Bow, Black
28	J813 1293	4			SCREW
29	J813 1453	2			ROD, Support
30	J813 1454-5	1			SUPPORT, Roof

MODEL CODES
16=Cherokee 2 Dr.(1981-83)
17=Cherokee 2 Dr.(1981-83)
73=Cherokee 2WD-2 Dr.(1984-86)
74=Cherokee 2WD-4 Dr.(1984-86)
18=Cherokee 4 Dr.(1981-83)
77=Cherokee 4WD-2 Dr.(1984-86)
78=Cherokee 4WD-4 Dr.(1984-86)
85=CJ-5 (1981-83)
86=CJ-6(1981)
87=CJ-7(1981-86)
88=CJ-8, Scrambler(1981-86)
64=Comanche 2WD-6 Ft. Box(1986)
66=Comanche 2WD-7 Ft. Box(1986)
63=Comanche 4WD-6 Ft. Box(1986)
65=Comanche 4WD-7 Ft. Box(1986)
15=Grand Wagoneer 4 Dr.(1984-86)
25=J-10 Truck 7 Ft. Box(1981-84)
26=J10 Truck 8 Ft. Box(1981-86)
27=J-20 Truck 8 Ft. Box(1981-86)
15=Wagoneer 4 Dr.(1981-83)
75=Wagoneer 4WD-4 Dr.(1984-86)

BODY
CJ=CJ-5, CJ-6, CJ-7, CJ-8, Scrambler(1981-86)
MJ=Comanche Pickup(1986)

STYLES
SJ=Wagoneer(1981-83), Grand Wagoneer(1984-86), Cherokee(1981-83), J-10, J-20(1981-86)
XJ=Wagoneer(1984-86), Cherokee(1984-86)

AR = Use as Required - = Non Illustrated Part P.A.R. = Paint as Required

« RETURN TO GROUP INDEX

SOFT TOP AND WINDOWS WITH FULL HARD DOORS CJ-8 EXPORT
Figure 23A-2600

81J69 2600

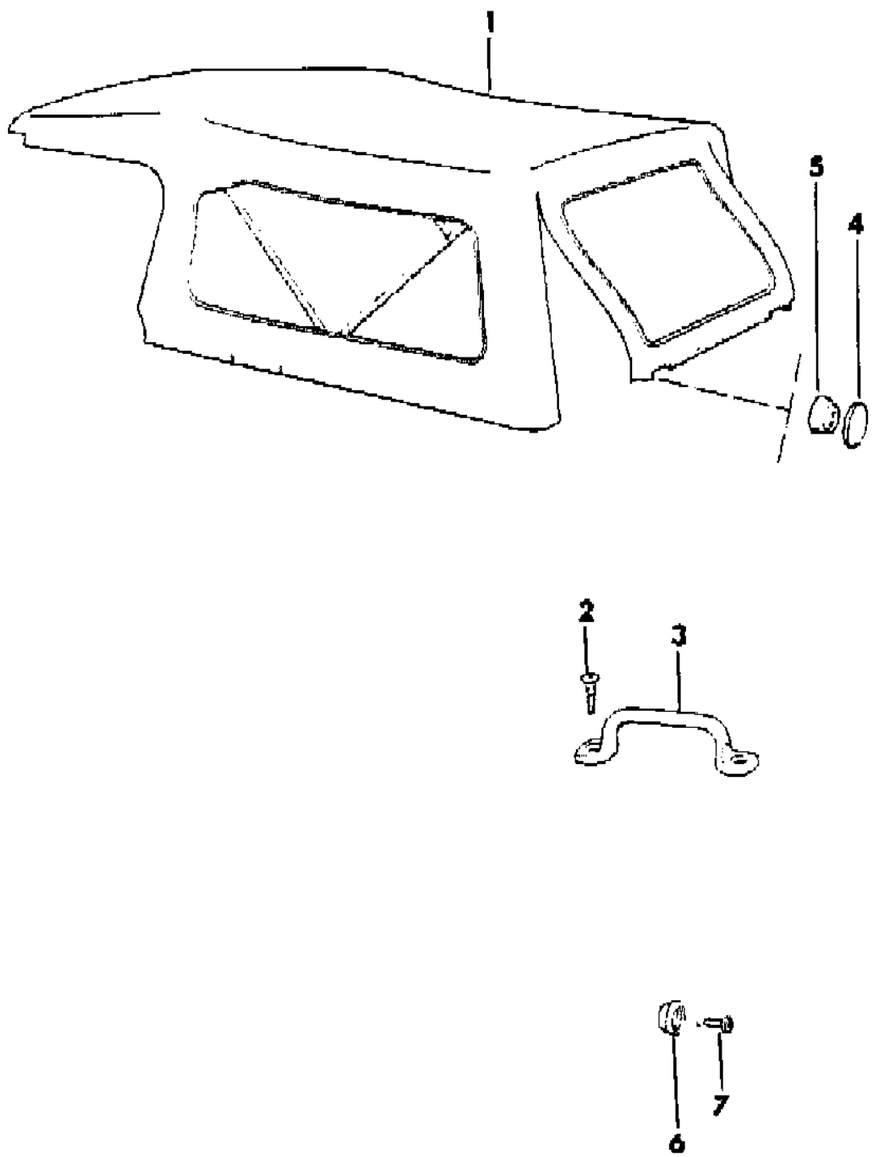

ITEM	PART NUMBER	QTY	BODY	MODEL	DESCRIPTION
1					TOP, Soft
	J813 1430	1			Black
	J813 1431	1			Blue
	J813 1432	1			Nutmeg
	J813 1433	1			White
2	J813 1366	2			SCREW
3	5501 3668	AR			LOOP, Footman
4	J812 3939	AR			SNAP
5					SNAP
	J812 3940	AR			Medium Action
	J812 3941	AR			Hard Action
6	J812 3724	AR			SNAP
7	J400 5777	AR			SCREW

MODEL CODES

16=Cherokee 2 Dr.(1981-83)	78=Cherokee 4WD-4 Dr.(1984-86)	64=Comanche 2WD-6 Ft. Box(1986)	25=J-10 Truck 7 Ft. Box(1981-84)
17=Cherokee 2 Dr.(1981-83)	85=CJ-5 (1981-83)	66=Comanche 2WD-7 Ft. Box(1986)	26=J10 Truck 8 Ft. Box(1981-86)
73=Cherokee 2WD-2 Dr.(1984-86)	86=CJ-6(1981)	63=Comanche 4WD-6 Ft. Box(1986)	27=J-20 Truck 8 Ft. Box(1981-86)
74=Cherokee 2WD-4 Dr.(1984-86)	87=CJ-7(1981-86)	65=Comanche 4WD-7 Ft. Box(1986)	15=Wagoneer 4 Dr.(1981-83)
18=Cherokee 4 Dr.(1981-83)	88=CJ-8, Scrambler(1981-86)	15=Grand Wagoneer 4 Dr.(1984-86)	75=Wagoneer 4WD-4 Dr.(1984-86)
77=Cherokee 4WD-2 Dr.(1984-86)			

BODY
CJ=CJ-5, CJ-6, CJ-7, CJ-8, Scrambler(1981-86)
MJ=Comanche Pickup(1986)

STYLES
SJ=Wagoneer(1981-83), Grand Wagoneer(1984-86), Cherokee(1981-83), J-10, J-20(1981-86)
XJ=Wagoneer(1984-86), Cherokee(1984-86)

AR = Use as Required - = Non Illustrated Part P.A.R. = Paint as Required

« RETURN TO GROUP INDEX

TONNEAU COVER SCRAMBLER
Figure 23A-2700

81J69 2700

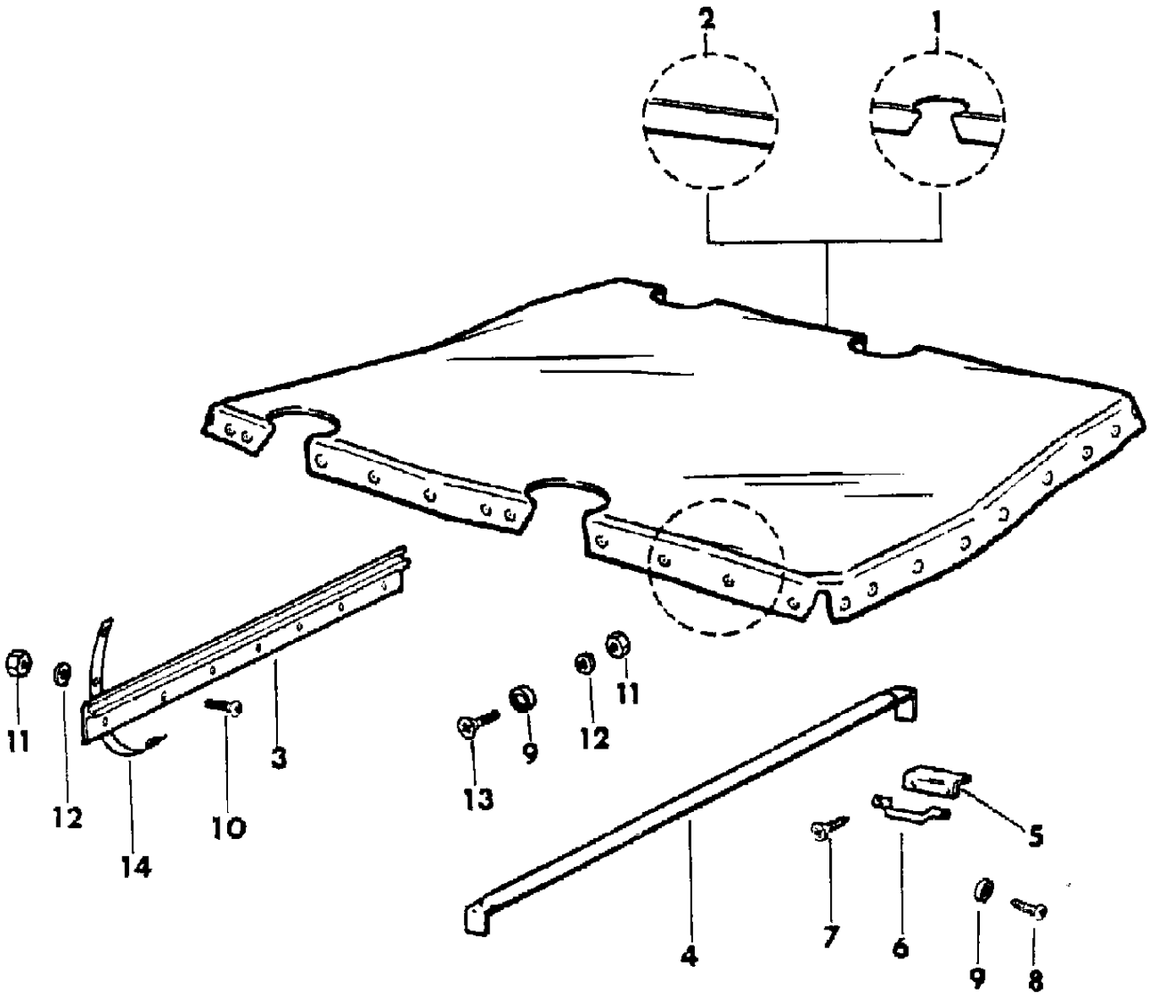

ITEM	PART NUMBER	QTY	BODY	MODEL	DESCRIPTION
1					TONNEAU COVER, With Wood Rails ***
	J813 1357	1			1981-82: Black
	8350 0163	1			1983-85: Black
	J813 1358	1			1981: Blue
	8350 1510	1			1985: Honey
	J813 1359	1			1981-82: Nutmeg
	8350 0164	1			1983: Nutmeg
	J813 1360	1			1982: Slate Blue
	8350 0165	1			1983: Slate Blue
	J813 1356	1			1981-82: White
	8350 0162	1			1983: White
2					TONNEAU COVER, Without Wood Rails ***
	J813 1352	1			1981-82: Black
	8350 0159	1			1983-85: Black
	J813 1353	1			1981: Blue
	8350 1509	1			1985: Honey
	J813 1354	1			1981-82: Nutmeg
	8350 0160	1			1983: Nutmeg
	J813 1355	1			1982: Slate Blue
	8350 0161	1			1983: Slate Blue
	J813 1351	1			1981-82: White
	8350 0158	1			1983: White
3	J813 1362	1			FORMER ***
4	J813 1361	2			BOW
5	J813 1367	AR			PLATE
6	J813 1365	AR			LOOP, Footman
7	J813 1366	AR			SCREW
8	J400 5764	AR			SCREW
9	J812 3724	AR			STUD
10	J813 1368	7			SCREW
11	J012 0361	AR			NUT
12	J813 1369	AR			NUT
13	J813 1370	AR			SCREW
14					STRAP
	J813 1363	AR			Beige
	J813 1364	AR			Black

MODEL CODES

16=Cherokee 2 Dr.(1981-83)
17=Cherokee 2 Dr.(1981-83)
73=Cherokee 2WD-2 Dr.(1984-86)
74=Cherokee 2WD-4 Dr.(1984-86)
18=Cherokee 4 Dr.(1981-83)
77=Cherokee 4WD-2 Dr.(1984-86)
78=Cherokee 4WD-4 Dr.(1984-86)
85=CJ-5 (1981-83)
86=CJ-6(1981)
87=CJ-7(1981-86)
88=CJ-8, Scrambler(1981-86)
64=Comanche 2WD-6 Ft. Box(1986)
66=Comanche 2WD-7 Ft. Box(1986)
63=Comanche 4WD-6 Ft. Box(1986)
65=Comanche 4WD-7 Ft. Box(1986)
15=Grand Wagoneer 4 Dr.(1984-86)
25=J-10 Truck 7 Ft. Box(1981-84)
26=J10 Truck 8 Ft. Box(1981-86)
27=J-20 Truck 8 Ft. Box(1981-86)
15=Wagoneer 4 Dr.(1981-83)
75=Wagoneer 4WD-4 Dr.(1984-86)

BODY
CJ=CJ-5, CJ-6, CJ-7, CJ-8, Scrambler(1981-86)
MJ=Comanche Pickup(1986)

STYLES
SJ=Wagoneer(1981-83), Grand Wagoneer(1984-86), Cherokee(1981-83), J-10, J-20(1981-86)
XJ=Wagoneer(1984-86), Cherokee(1984-86)

AR = Use as Required - = Non Illustrated Part P.A.R. = Paint as Required

« RETURN TO GROUP INDEX

LIFT DOOR, LATCH AND HINGES WITH MEYER CAB CJ-5
Figure 23A-2800

81J69 2800

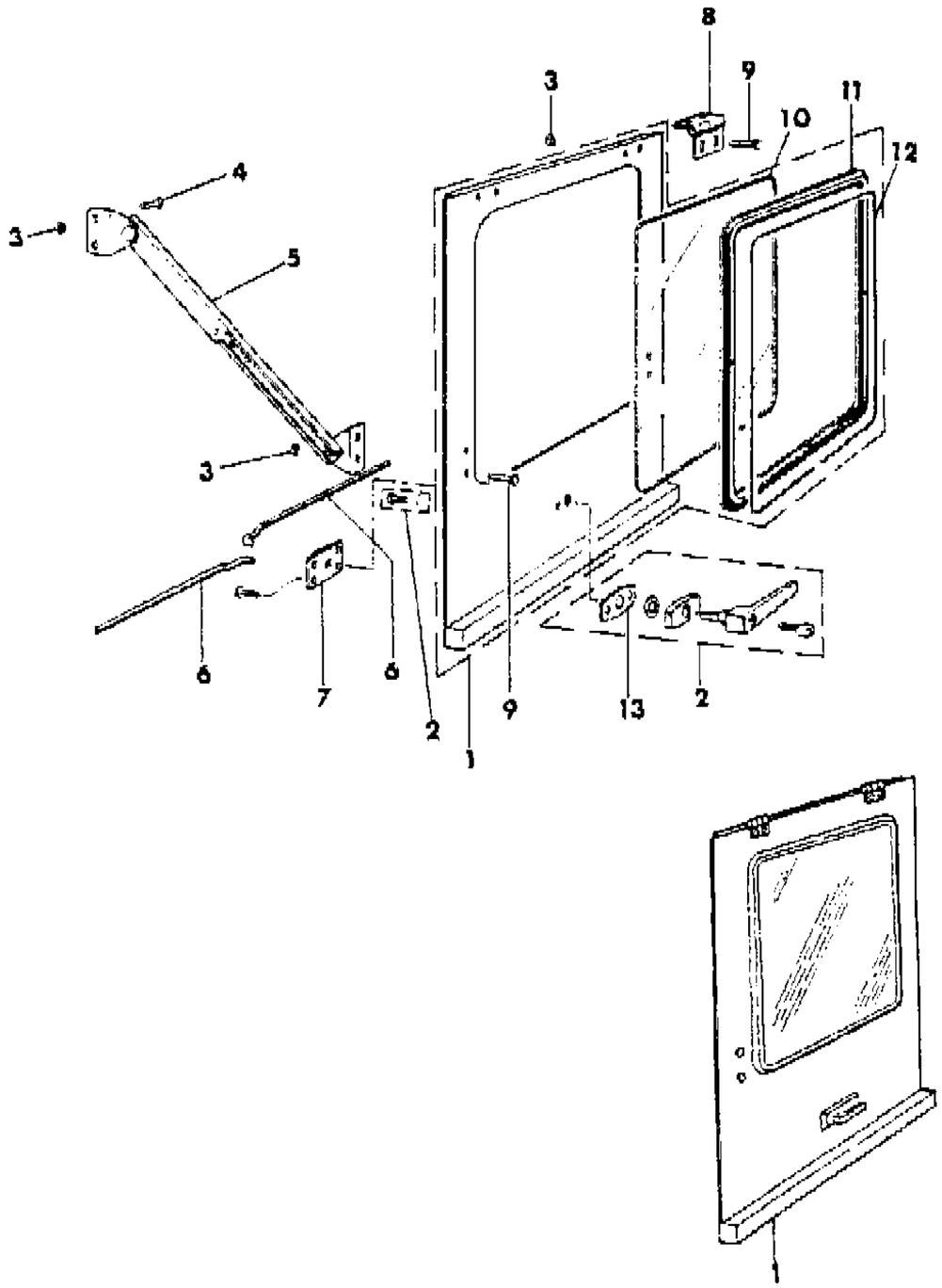

ITEM	PART NUMBER	QTY	BODY	MODEL	DESCRIPTION
1	J204 3004	1			DOOR ASSEMBLY ***
2	J204 3663	1			HANDLE ASSEMBLY
3	J202 0312	AR			NUT
4	J202 0735	4			BOLT
5	J204 3669	2			SUPPORT, Lift Door
6	J204 3661	2			ROD
7	J204 3660	1			LATCH
8	J204 3021	2			HINGE
9	J202 0002	AR			SCREW
10	J204 2654	1			GLASS, Lift Door
11	J204 3655	1			SEAL, Lift Door Glass
12	J204 3656	1			MOLDING ***
13	J204 3665	1			PLATE

MODEL CODES

16=Cherokee 2 Dr.(1981-83)
17=Cherokee 2 Dr.(1981-83)
73=Cherokee 2WD-2 Dr.(1984-86)
74=Cherokee 2WD-4 Dr.(1984-86)
18=Cherokee 4 Dr.(1981-83)
77=Cherokee 4WD-2 Dr.(1984-86)
78=Cherokee 4WD-4 Dr.(1984-86)
85=CJ-5 (1981-83)
86=CJ-6(1981)
87=CJ-7(1981-86)
88=CJ-8, Scrambler(1981-86)
64=Comanche 2WD-6 Ft. Box(1986)
66=Comanche 2WD-7 Ft. Box(1986)
63=Comanche 4WD-6 Ft. Box(1986)
65=Comanche 4WD-7 Ft. Box(1986)
15=Grand Wagoneer 4 Dr.(1984-86)
25=J-10 Truck 7 Ft. Box(1981-84)
26=J10 Truck 8 Ft. Box(1981-86)
27=J-20 Truck 8 Ft. Box(1981-86)
15=Wagoneer 4 Dr.(1981-83)
75=Wagoneer 4WD-4 Dr.(1984-86)

BODY
CJ=CJ-5, CJ-6, CJ-7, CJ-8, Scrambler(1981-86)
MJ=Comanche Pickup(1986)

STYLES
SJ=Wagoneer(1981-83), Grand Wagoneer(1984-86), Cherokee(1981-83), J-10, J-20(1981-86)
XJ=Wagoneer(1984-86), Cherokee(1984-86)

AR = Use as Required - = Non Illustrated Part P.A.R. = Paint as Required

« RETURN TO GROUP INDEX

LIFT DOOR, LATCH AND HINGES WITH HARDTOP ENCLOSURE CJ-7
Figure 23A-2900

81J69 2900

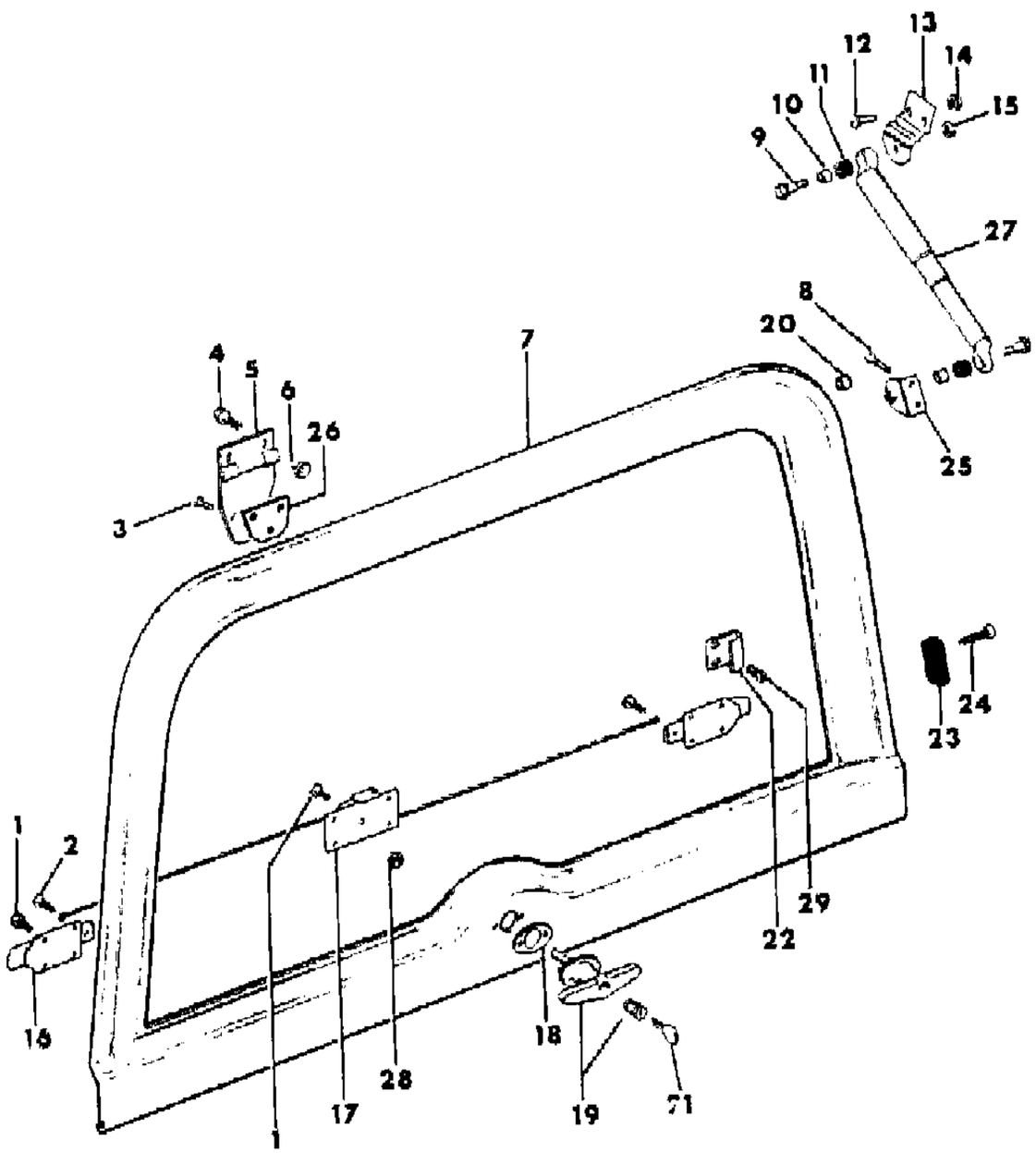

ITEM	PART NUMBER	QTY	BODY	MODEL	DESCRIPTION
1	J400 4994	12			SCREW
2	J812 8165	2			SCREW
3	J400 5863	6			SCREW
4	J400 5693	4			SCREW
5	J812 8520	2			HINGE
6	J400 5692	4			NUT
7	J546 0625	1			DOOR, LIFT
8	J400 4648	4			SCREW
9	J400 5655	AR			SCREW
10	J368 3521	8			INSERT, Rubber
11	J368 3520	8			INSERT, Steel
12	J400 5689	4			SCREW
13	J575 1386	2			BRACKET
14	J400 4307	4			NUT
15	J941 3447	2			NUT
16	J812 8164	2			LATCH
17	J812 8163	1			LATCH, Lift Door
18	J095 3289	1			GASKET
19					HANDLE ASSEMBLY
	J812 4246	1			1981: Ribbed Surface, With Cylinder, Without Key
	J813 3802	1			1981-86: Smooth Surface, With Cylinder, Without Key
20	J400 7066	2			CAP
21	J364 1913	1			KEY, Uncoded
22	J546 0633	2			STRIKER
23	J546 0647	2			STABILIZER, Black
24	J812 0052	4			SCREW
25	J546 0019	2			BRACKET
26	J812 8568	2			SHIM
27	J545 4185	2			SUPPORT, Lift Door
28	J027 1169	2			NUT
29					SCREW
	J400 5622	4			.75" Lg
	J400 4648	4			.63" Lg.

MODEL CODES

16=Cherokee 2 Dr.(1981-83)
17=Cherokee 2 Dr.(1981-83)
73=Cherokee 2WD-2 Dr.(1984-86)
74=Cherokee 2WD-4 Dr.(1984-86)
18=Cherokee 4 Dr.(1981-83)
77=Cherokee 4WD-2 Dr.(1984-86)
78=Cherokee 4WD-4 Dr.(1984-86)
85=CJ-5 (1981-83)
86=CJ-6(1981)
87=CJ-7(1981-86)
88=CJ-8, Scrambler(1981-86)
64=Comanche 2WD-6 Ft. Box(1986)
66=Comanche 2WD-7 Ft. Box(1986)
63=Comanche 4WD-6 Ft. Box(1986)
65=Comanche 4WD-7 Ft. Box(1986)
15=Grand Wagoneer 4 Dr.(1984-86)
25=J-10 Truck 7 Ft. Box(1981-84)
26=J10 Truck 8 Ft. Box(1981-86)
27=J-20 Truck 8 Ft. Box(1981-86)
15=Wagoneer 4 Dr.(1981-83)
75=Wagoneer 4WD-4 Dr.(1984-86)

BODY
CJ=CJ-5, CJ-6, CJ-7, CJ-8, Scrambler(1981-86)
MJ=Comanche Pickup(1986)

STYLES
SJ=Wagoneer(1981-83), Grand Wagoneer(1984-86), Cherokee(1981-83), J-10, J-20(1981-86)
XJ=Wagoneer(1984-86), Cherokee(1984-86)

AR = Use as Required - = Non Illustrated Part P.A.R. = Paint as Required

« RETURN TO GROUP INDEX

SUNROOF, POP-UP WITH PLASTIC TOP ENCLOSURE CJ-7
Figure 23A-3000

81J69 3000

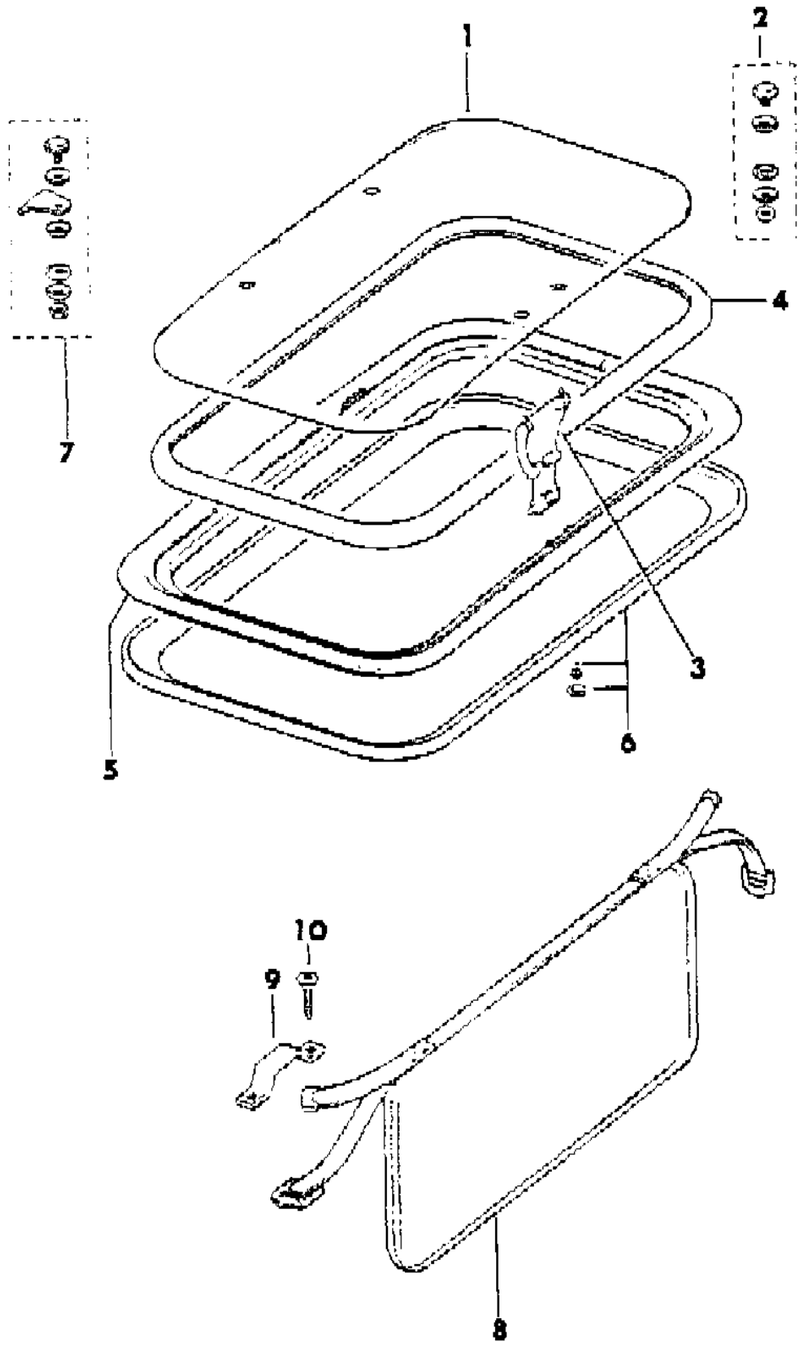

ITEM	PART NUMBER	QTY	BODY	MODEL	DESCRIPTION
1	J813 3257	1			GLASS, Sunroof
2	J813 3260	1			HARDWARE PACKAGE
3	J813 3259	1			HANDLE
4	J813 3262	1			SEAL, Sunroof Outer
5	J813 3256	1			FRAME. Sunroof ***
6	J813 3258	1			SEAL
7	J813 3261	2			HINGE PACKAGE ***
8	J575 0430	1			COVER, Sunroof Glass
9	J545 5264	4			LOOP, Footman
10	S016 3470	8			SCREW

MODEL CODES

16=Cherokee 2 Dr.(1981-83)
17=Cherokee 2 Dr.(1981-83)
73=Cherokee 2WD-2 Dr.(1984-86)
74=Cherokee 2WD-4 Dr.(1984-86)
18=Cherokee 4 Dr.(1981-83)
77=Cherokee 4WD-2 Dr.(1984-86)
78=Cherokee 4WD-4 Dr.(1984-86)
85=CJ-5 (1981-83)
86=CJ-6(1981)
87=CJ-7(1981-86)
88=CJ-8, Scrambler(1981-86)
64=Comanche 2WD-6 Ft. Box(1986)
66=Comanche 2WD-7 Ft. Box(1986)
63=Comanche 4WD-6 Ft. Box(1986)
65=Comanche 4WD-7 Ft. Box(1986)
15=Grand Wagoneer 4 Dr.(1984-86)
25=J-10 Truck 7 Ft. Box(1981-84)
26=J10 Truck 8 Ft. Box(1981-86)
27=J-20 Truck 8 Ft. Box(1981-86)
15=Wagoneer 4 Dr.(1981-83)
75=Wagoneer 4WD-4 Dr.(1984-86)

BODY
CJ=CJ-5, CJ-6, CJ-7, CJ-8, Scrambler(1981-86)
MJ=Comanche Pickup(1986)

STYLES
SJ=Wagoneer(1981-83), Grand Wagoneer(1984-86), Cherokee(1981-83), J-10, J-20(1981-86)
XJ=Wagoneer(1984-86), Cherokee(1984-86)

AR = Use as Required - = Non Illustrated Part P.A.R. = Paint as Required

« RETURN TO GROUP INDEX

RUNNING BOARDS STEP, BODY SIDE CJ
Figure 23A-3100

81J69 3100

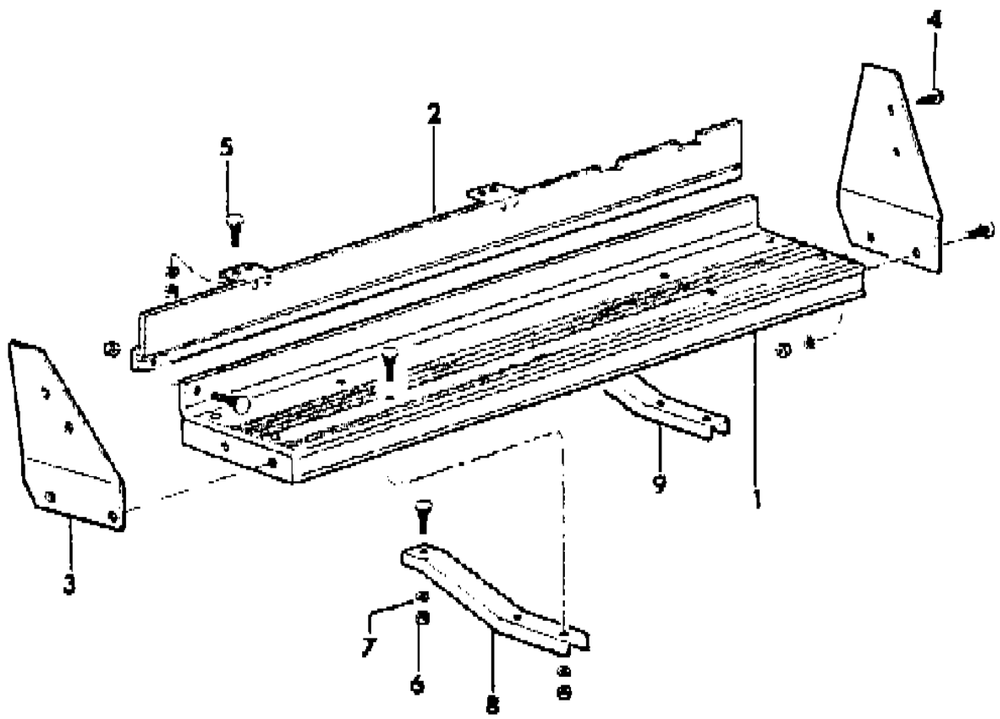

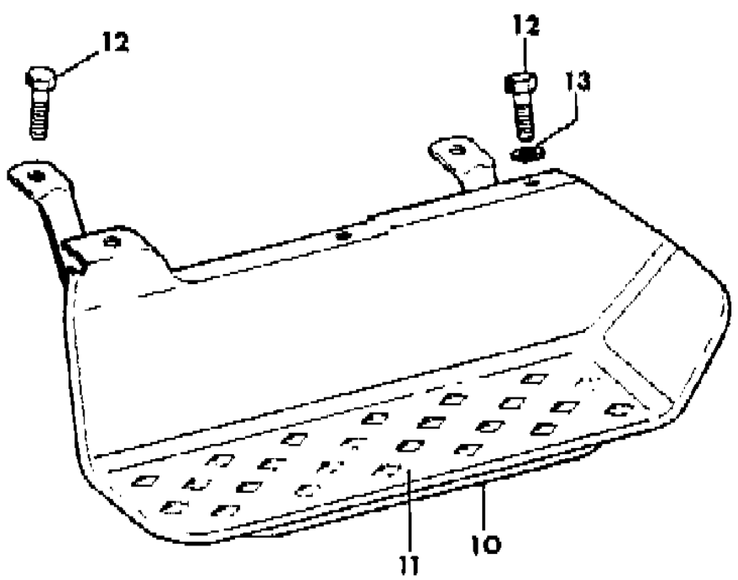

ITEM	PART NUMBER	QTY	BODY	MODEL	DESCRIPTION
1					BOARD, Running
	J813 1372-3	1		85	
	J813 1376-7	1		87	
	8350 0174	2		88	
2					EXTENSION
	J813 1374-5	1		85	
	J813 1378-9	1		87	
	8350 0172-3	1		88	
3	J813 1380-1	AR			GUARD, Splash
4	J813 1393	AR			SCREW
5	J813 1390	AR			SCREW
6	J813 1391	AR			NUT
7	J813 1392	AR			WASHER
8					BRACE
	J813 1382	2		85	
	J813 1381	2		87	
	J813 1371	2		88	
9	J813 1371	2			BRACE
10					STEP, Body Side ***
	J575 8122-3	1			Diamond Finish
	J813 4436-7	1			Smooth Finish
	J576 2514-5	1			EXPORT, Economic Commission of Europe, Japan
11	J576 1538-9	1			TREAD, Step ***
12					BOLT
	J400 6606	10			
	J400 6611	6			EXPORT, Economic Commission of Europe, Japan ***
13	J400 1140	10			WASHER

MODEL CODES

16=Cherokee 2 Dr.(1981-83)	78=Cherokee 4WD-4 Dr.(1984-86)	64=Comanche 2WD-6 Ft. Box(1986)	25=J-10 Truck 7 Ft. Box(1981-84)
17=Cherokee 2 Dr.(1981-83)	85=CJ-5 (1981-83)	66=Comanche 2WD-7 Ft. Box(1986)	26=J10 Truck 8 Ft. Box(1981-86)
73=Cherokee 2WD-2 Dr.(1984-86)	86=CJ-6(1981)	63=Comanche 4WD-6 Ft. Box(1986)	27=J-20 Truck 8 Ft. Box(1981-86)
74=Cherokee 2WD-4 Dr.(1984-86)	87=CJ-7(1981-86)	65=Comanche 4WD-7 Ft. Box(1986)	15=Wagoneer 4 Dr.(1981-83)
18=Cherokee 4 Dr.(1981-83)	88=CJ-8, Scrambler(1981-86)	15=Grand Wagoneer 4 Dr.(1984-86)	75=Wagoneer 4WD-4 Dr.(1984-86)
77=Cherokee 4WD-2 Dr.(1984-86)			

BODY
CJ=CJ-5, CJ-6, CJ-7, CJ-8, Scrambler(1981-86)
MJ=Comanche Pickup(1986)

STYLES
SJ=Wagoneer(1981-83), Grand Wagoneer(1984-86), Cherokee(1981-83), J-10, J-20(1981-86)
XJ=Wagoneer(1984-86), Cherokee(1984-86)

AR = Use as Required - = Non Illustrated Part P.A.R. = Paint as Required

« RETURN TO GROUP INDEX

PAN, FLOOR XJ CHEROKEE, XJ WAGONEER
Figure 23A-3200

81J69 3200

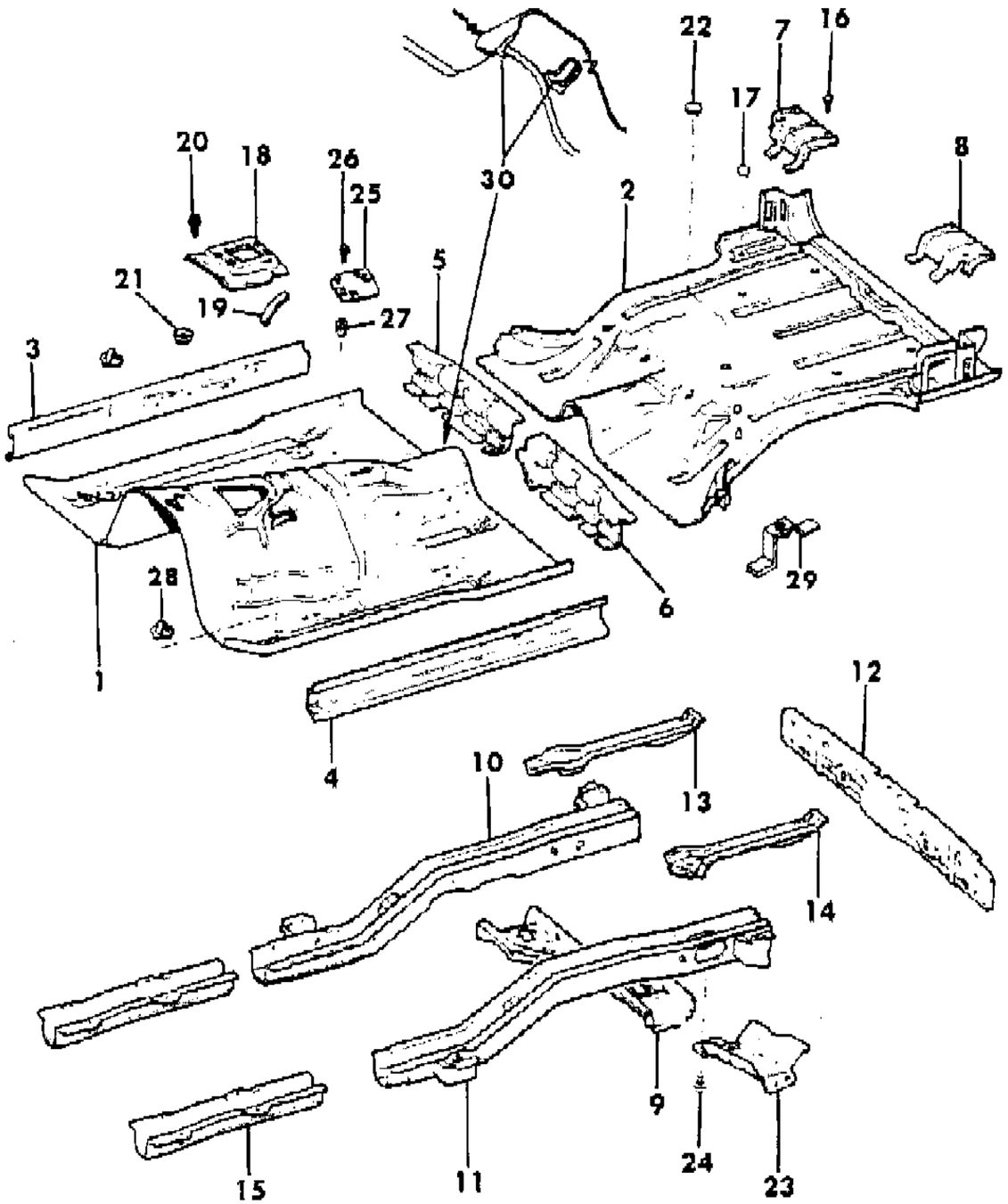

ITEM	PART NUMBER	QTY	BODY	MODEL	DESCRIPTION
1	5700 0006	1			PAN, Front Floor
2	5700 0005	1			PAN, Rear Floor
3	5700 0012	1			SILL, Front Pan
4	5700 0013	1			SILL, Front Pan
5	5500 0008	1			CROSSMEMBER, Seat
6	5500 0009	1			CROSSMEMBER, Seat
7	5500 2230	1			COVER, Floor Pan
8	5500 2231	1			COVER, Floor Pan
9	5700 0020	1			CROSSMEMBER, Shock
10	5700 0014	1			SILL, Rear Side
11	5700 0015	1			SILL Rear Side ***
12	5700 0007	1			SILL, Rear Cross
13	5700 0022	1			SUPPORT, Fuel Tank
14	5500 2935	1			SUPPORT, Fuel Tank
15	5500 1206	2			SILL, Center
16	3420 1517	6			SCREW
17	5500 6578	10			PLUG, Drain
18					COVER, Transmission
	5300 0580	1			With Manual Transmission
	5300 0704	1			With Automatic Transmission
19	5500 4690	1			SEAL, Cover
20	J400 1701	AR			SCREW
21	J400 0499	1			PLUG
22	5500 6579	5			PLUG
23	5500 3285	1			SHIELD, Splash
24	1150 2453	4			SCREW
25	5501 0460	1			COVER, Transfer Case, 2WD
26	3420 1277	5			SCREW, 2WD
27	3420 1578	5			NUTSERT, 2WD ***
28	3420 1275	2			PLUG
29	5500 1903	1			BRACKET, Jack
30	5500 5177	2			BRACKET, Hand Brake Cable Mounting

MODEL CODES
16=Cherokee 2 Dr.(1981-83)
17=Cherokee 2 Dr.(1981-83)
73=Cherokee 2WD-2 Dr.(1984-86)
74=Cherokee 2WD-4 Dr.(1984-86)
18=Cherokee 4 Dr.(1981-83)
77=Cherokee 4WD-2 Dr.(1984-86)
78=Cherokee 4WD-4 Dr.(1984-86)
85=CJ-5 (1981-83)
86=CJ-6(1981)
87=CJ-7(1981-86)
88=CJ-8, Scrambler(1981-86)
64=Comanche 2WD-6 Ft. Box(1986)
66=Comanche 2WD-7 Ft. Box(1986)
63=Comanche 4WD-6 Ft. Box(1986)
65=Comanche 4WD-7 Ft. Box(1986)
15=Grand Wagoneer 4 Dr.(1984-86)
25=J-10 Truck 7 Ft. Box(1981-84)
26=J10 Truck 8 Ft. Box(1981-86)
27=J-20 Truck 8 Ft. Box(1981-86)
15=Wagoneer 4 Dr.(1981-83)
75=Wagoneer 4WD-4 Dr.(1984-86)

BODY
CJ=CJ-5, CJ-6, CJ-7, CJ-8, Scrambler(1981-86)
MJ=Comanche Pickup(1986)

STYLES
SJ=Wagoneer(1981-83), Grand Wagoneer(1984-86), Cherokee(1981-83), J-10, J-20(1981-86)
XJ=Wagoneer(1984-86), Cherokee(1984-86)

AR = Use as Required - = Non Illustrated Part P.A.R. = Paint as Required

« RETURN TO GROUP INDEX

PAN, FLOOR COMANCHE
Figure 23A-3300

81J69 3300

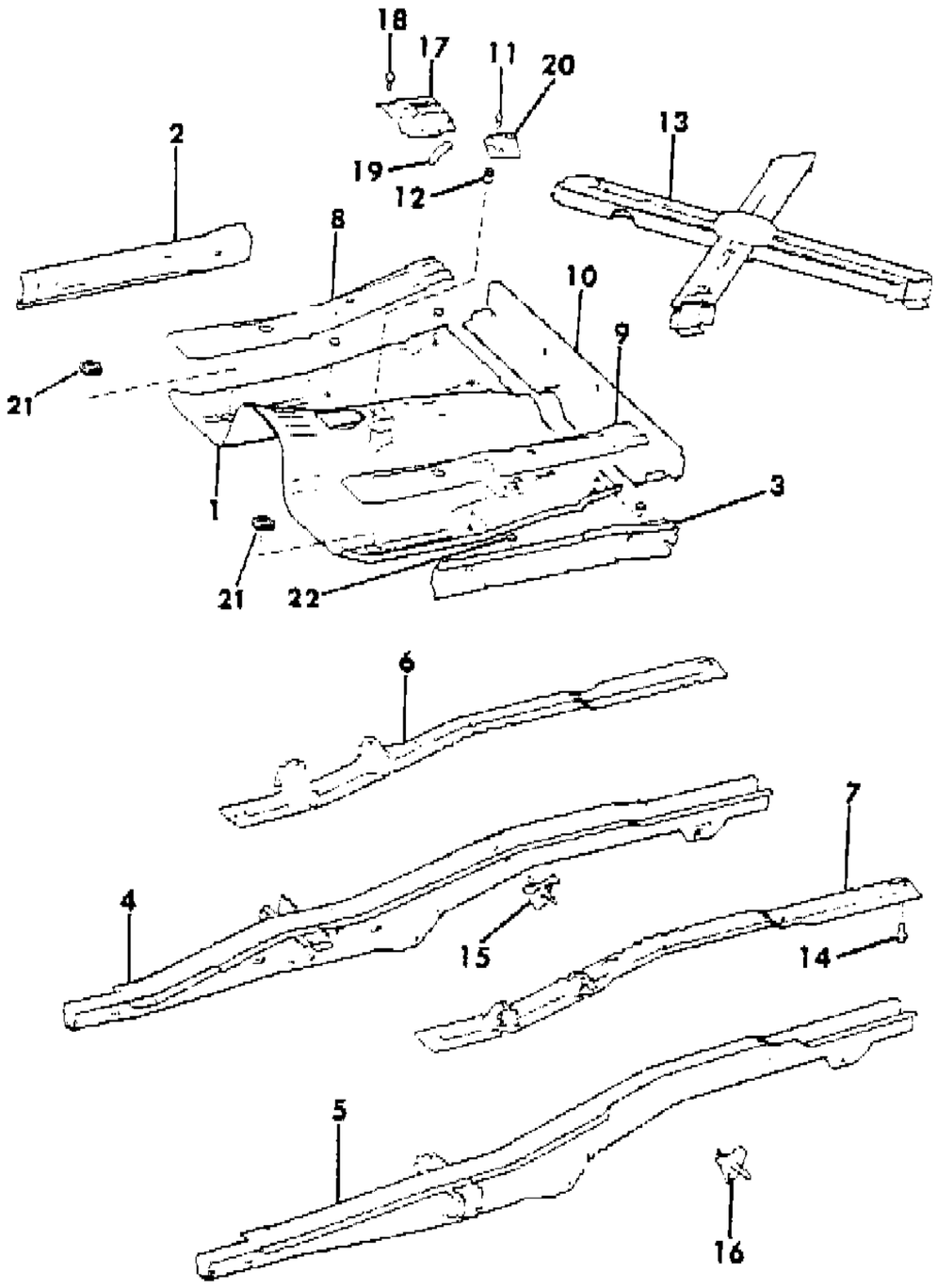

ITEM	PART NUMBER	QTY	BODY	MODEL	DESCRIPTION
1	5700 0898	1			PAN, Cab Floor
2	5700 0896	1			SILL, Body Side
3	5700 0897	1			SILL, Body Side
4					RAIL, Cab and Pick-up Box
	5700 0910	1			With 7ft. Pickup Box
	5700 0946	1			With 6ft. Pickup Box
5					RAIL, Cab and Pickup Box
	5700 0911	1			With 7ft. Pickup Box
	5700 0947	1			With 6ft. Pickup Box
6					REINFORCEMENT, Rail Frame
	5700 0902	1			With 7ft. Pickup Box
	5700 0938	1			With 6ft. Pickup Box
7					REINFORCEMENT, Rail Frame
	5700 0903	1			With 7ft. Pickup Box
	5700 0939	1			With 6ft. Pickup Box
8	5700 0894	1			REINFORCEMEMT, Cab Floor ***
9	5700 0895	1			REINFORCEMENT, Cab Floor
10	5500 3470	1			CROSSMEMBER, Rear Cab Floor
11	3420 1277	1			SCREW, 2WD
12	3420 1578	5			NUTSERT, 2WD ***
13					CROSSMEMBER, Rear Rail
	5700 0917	1			With 7ft. Pickup Box
	5700 0935	1			With 6ft. Pickup Box
14	1150 2606	6			BOLT
15	5501 0516	1			BRACKET, Shock Absorber
16	5501 0517	1			BRACKET, Shock Absorber
17					COVER, Transmission
					With Floor Gear Shift
	5300 0580	1			With Manual Transmission
	5300 0704	1			With Automatic Transmission
					With Column Gear Shift
	5500 9171	1			With Automatic Transmission - 4WD
	5500 7376	1			With Automatic Transmission - 2WD
18	J400 1701	9			SCREW
19	5500 4690	1			SEAL, Cover
20	5501 0460	1			COVER, Transfer Case
21	3420 2136	2			PLUG
22	5500 6578	4			PLUG

MODEL CODES

16=Cherokee 2 Dr.(1981-83)
17=Cherokee 2 Dr.(1981-83)
73=Cherokee 2WD-2 Dr.(1984-86)
74=Cherokee 2WD-4 Dr.(1984-86)
18=Cherokee 4 Dr.(1981-83)
77=Cherokee 4WD-2 Dr.(1984-86)
78=Cherokee 4WD-4 Dr.(1984-86)
85=CJ-5 (1981-83)
86=CJ-6(1981)
87=CJ-7(1981-86)
88=CJ-8, Scrambler(1981-86)
64=Comanche 2WD-6 Ft. Box(1986)
66=Comanche 2WD-7 Ft. Box(1986)
63=Comanche 4WD-6 Ft. Box(1986)
65=Comanche 4WD-7 Ft. Box(1986)
15=Grand Wagoneer 4 Dr.(1984-86)
25=J-10 Truck 7 Ft. Box(1981-84)
26=J10 Truck 8 Ft. Box(1981-86)
27=J-20 Truck 8 Ft. Box(1981-86)
15=Wagoneer 4 Dr.(1981-83)
75=Wagoneer 4WD-4 Dr.(1984-86)

BODY
CJ=CJ-5, CJ-6, CJ-7, CJ-8, Scrambler(1981-86)
MJ=Comanche Pickup(1986)

STYLES
SJ=Wagoneer(1981-83), Grand Wagoneer(1984-86), Cherokee(1981-83), J-10, J-20(1981-86)
XJ=Wagoneer(1984-86), Cherokee(1984-86)

AR = Use as Required - = Non Illustrated Part P.A.R. = Paint as Required

« RETURN TO GROUP INDEX

PLATES, UNDERBODY SKID XJ CHEROKEE, XJ WAGONEER
Figure 23A-3400

81J69 3400

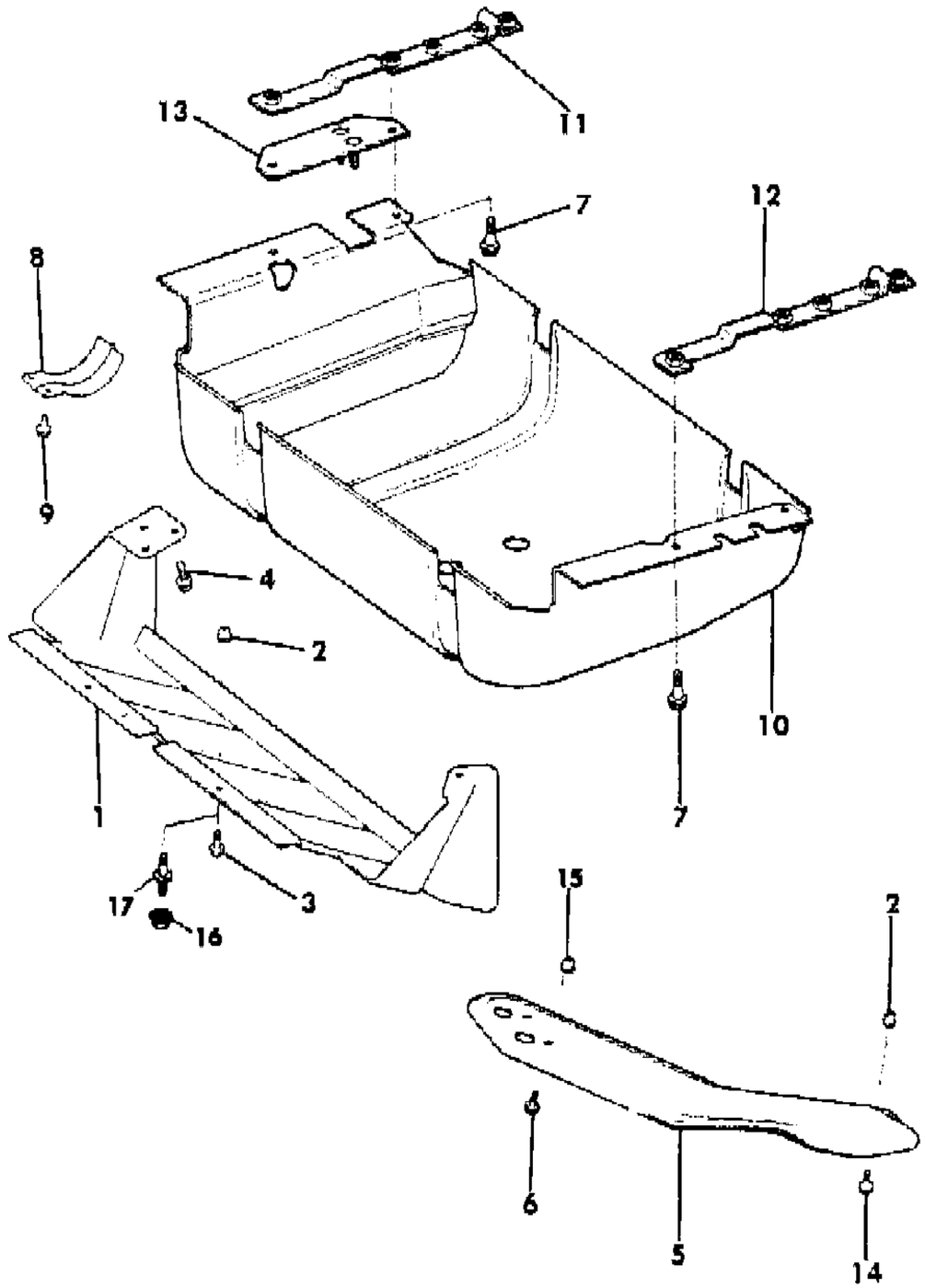

ITEM	PART NUMBER	QTY	BODY	MODEL	DESCRIPTION
1	5200 0998	1			PLATE, Skid
2	3420 1575	3			NUTSERT ***
3	1150 2605	3			BOLT, 1986
4	3420 1540	3			BOLT
5					PLATE, Skid
	5200 0730	1			1984-85
	5200 1746	1			1986
6					BOLT
	1150 2693	3			1984-85
	1150 2850	2			1986
7					BOLT
	3420 1386	4			1984-85
	3420 1964	4			1986
8	5300 0739	1			PLATE, Skid
9	3420 1033	2			BOLT
10	5200 1512	1			PLATE, Skid
11-12	5200 1174-5	1			REINFORCEMENT, Sill
13	5200 1511	1			BRACKET ASSEMBLY ***
14					BOLT
	1150 2693	3			1984-85
	3420 1936	1			1986
15					NUT
	1150 2811	2			1894-85
	3420 1575	2			1986
16	J420 0046	3			NUT, 1984-85
17	3420 1713	3			STUD, 1984-85

MODEL CODES

16=Cherokee 2 Dr.(1981-83)
17=Cherokee 2 Dr.(1981-83)
73=Cherokee 2WD-2 Dr.(1984-86)
74=Cherokee 2WD-4 Dr.(1984-86)
18=Cherokee 4 Dr.(1981-83)
77=Cherokee 4WD-2 Dr.(1984-86)
78=Cherokee 4WD-4 Dr.(1984-86)
85=CJ-5 (1981-83)
86=CJ-6(1981)
87=CJ-7(1981-86)
88=CJ-8, Scrambler(1981-86)
64=Comanche 2WD-6 Ft. Box(1986)
66=Comanche 2WD-7 Ft. Box(1986)
63=Comanche 4WD-6 Ft. Box(1986)
65=Comanche 4WD-7 Ft. Box(1986)
15=Grand Wagoneer 4 Dr.(1984-86)
25=J-10 Truck 7 Ft. Box(1981-84)
26=J10 Truck 8 Ft. Box(1981-86)
27=J-20 Truck 8 Ft. Box(1981-86)
15=Wagoneer 4 Dr.(1981-83)
75=Wagoneer 4WD-4 Dr.(1984-86)

BODY
CJ=CJ-5, CJ-6, CJ-7, CJ-8, Scrambler(1981-86)
MJ=Comanche Pickup(1986)

STYLES
SJ=Wagoneer(1981-83), Grand Wagoneer(1984-86), Cherokee(1981-83), J-10, J-20(1981-86)
XJ=Wagoneer(1984-86), Cherokee(1984-86)

AR = Use as Required - = Non Illustrated Part P.A.R. = Paint as Required

« RETURN TO GROUP INDEX

PLATES, UNDERBODY SKID COMANCHE
Figure 23A-3500

81J69 3500

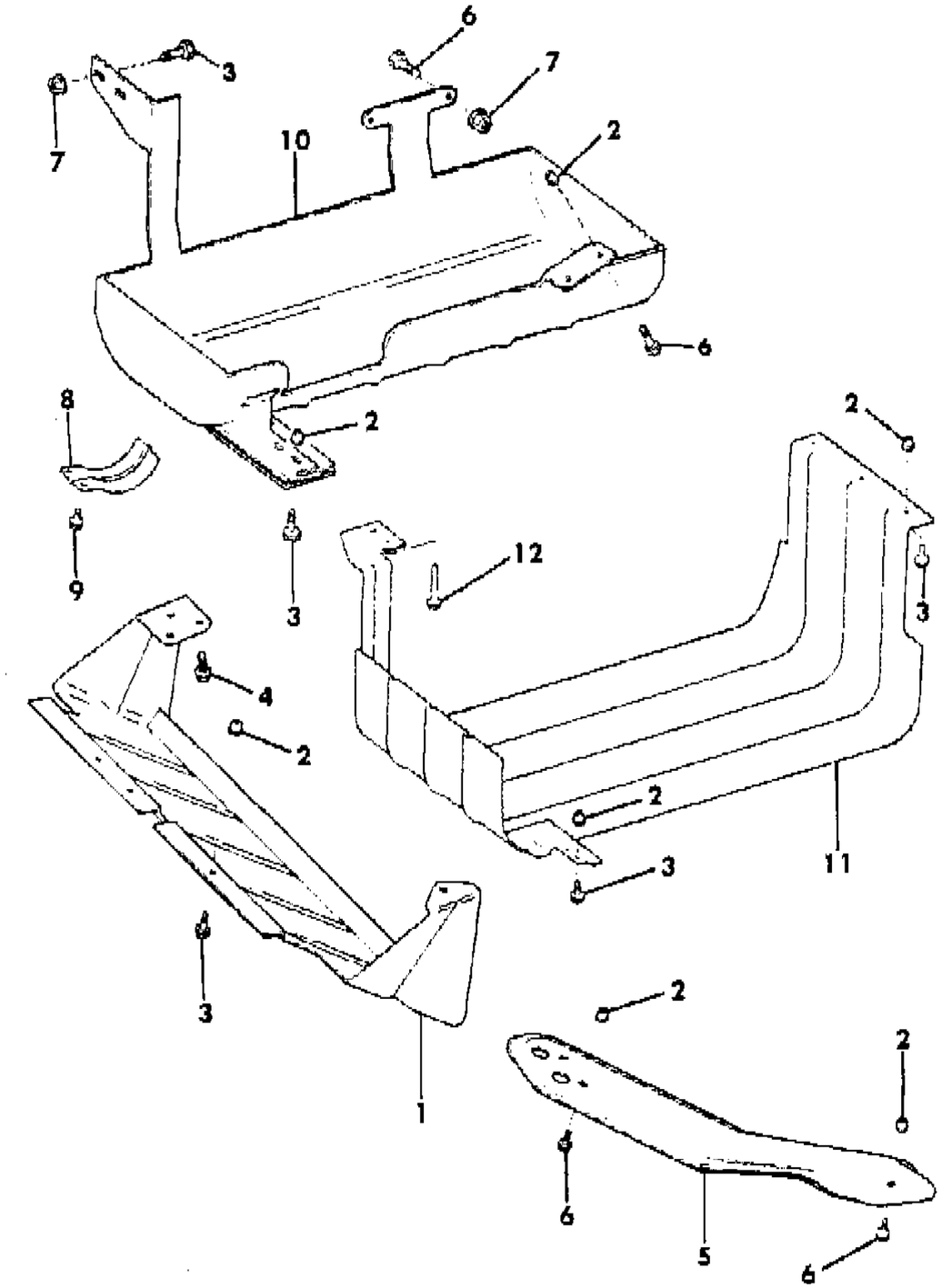

ITEM	PART NUMBER	QTY	BODY	MODEL	DESCRIPTION
1	5200 0998	1			PLATE, Skid
2	3420 1575	AR			NUTSERT ***
3	1150 2605	AR			BOLT
4	3420 1540	3			BOLT
5	5200 1746	1			PLATE, Skid
6	1150 2850	AR			BOLT
7	1150 1889	AR			NUT
8	5300 0739	1			PLATE, Skid
9	3420 1033	2			BOLT
10	5200 1806	1			PLATE, Skid, With 7ft. Pickup Box
11	5200 2810	1			PLATE, Skid, With 6ft. Pickup Box
12	3420 1559	2			BOLT

MODEL CODES

16=Cherokee 2 Dr.(1981-83)
17=Cherokee 2 Dr.(1981-83)
73=Cherokee 2WD-2 Dr.(1984-86)
74=Cherokee 2WD-4 Dr.(1984-86)
18=Cherokee 4 Dr.(1981-83)
77=Cherokee 4WD-2 Dr.(1984-86)
78=Cherokee 4WD-4 Dr.(1984-86)
85=CJ-5 (1981-83)
86=CJ-6(1981)
87=CJ-7(1981-86)
88=CJ-8, Scrambler(1981-86)
64=Comanche 2WD-6 Ft. Box(1986)
66=Comanche 2WD-7 Ft. Box(1986)
63=Comanche 4WD-6 Ft. Box(1986)
65=Comanche 4WD-7 Ft. Box(1986)
15=Grand Wagoneer 4 Dr.(1984-86)
25=J-10 Truck 7 Ft. Box(1981-84)
26=J10 Truck 8 Ft. Box(1981-86)
27=J-20 Truck 8 Ft. Box(1981-86)
15=Wagoneer 4 Dr.(1981-83)
75=Wagoneer 4WD-4 Dr.(1984-86)

BODY
CJ=CJ-5, CJ-6, CJ-7, CJ-8, Scrambler(1981-86)
MJ=Comanche Pickup(1986)

STYLES
SJ=Wagoneer(1981-83), Grand Wagoneer(1984-86), Cherokee(1981-83), J-10, J-20(1981-86)
XJ=Wagoneer(1984-86), Cherokee(1984-86)

AR = Use as Required - = Non Illustrated Part P.A.R. = Paint as Required

« RETURN TO GROUP INDEX

SEALS AND PLUGS, BODY XJ CHEROKEE, XJ WAGONEER, COMANCHE
Figure 23A-3600

81J69 3600

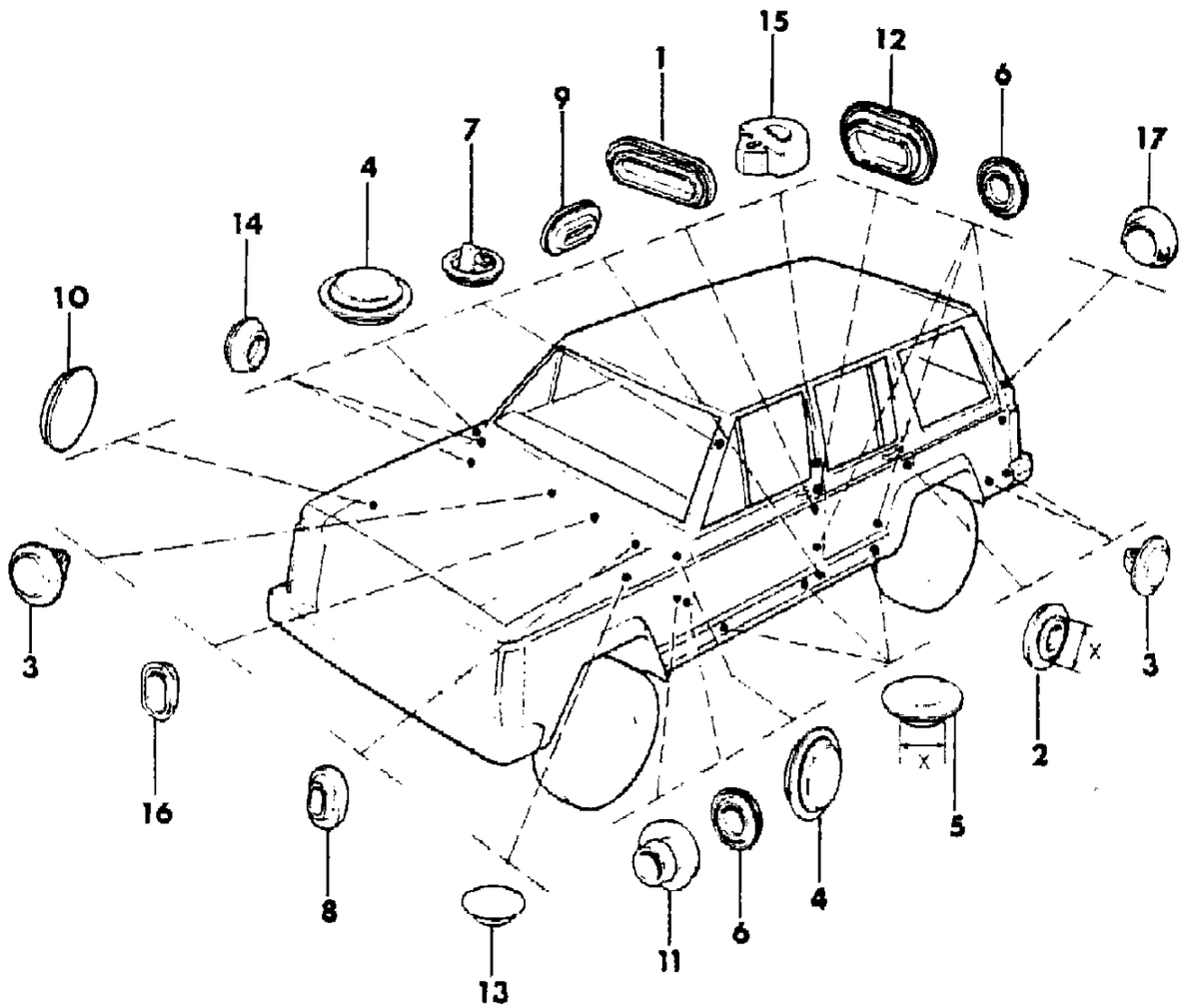

ITEM	PART NUMBER	QTY	BODY	MODEL	DESCRIPTION
1					PLUG
	5500 2550	2			Two Door Body Type
	5500 2368	2			Four Door Body Type
2					PLUG
	5500 2369	2			20mm
	3420 2049	2			16mm
3	3420 1274	5			PLUG, Less Factory Installed Air Conditioning
4	J400 5792	4			PLUG
5					PLUG
	3420 1532	6			20.7mm
	3420 1973	12			6.3mm
6	5500 2367	8			PLUG
7	J400 7054	2			PLUG
8	5500 5400	2			PLUG
9	3420 1613	2			PLUG
10	3420 1750	1			PLUG
11	3420 1614	4			PLUG
12	5500 5259	4			PLUG
13	J400 5015	2			PLUG
14	J400 0377	2			PLUG
15	J363 1398	6			BUMPER, Door
16	3420 1783	1			PLUG
17	J400 6481	10			PLUG

MODEL CODES
16=Cherokee 2 Dr.(1981-83)
17=Cherokee 2 Dr.(1981-83)
73=Cherokee 2WD-2 Dr.(1984-86)
74=Cherokee 2WD-4 Dr.(1984-86)
18=Cherokee 4 Dr.(1981-83)
77=Cherokee 4WD-2 Dr.(1984-86)
78=Cherokee 4WD-4 Dr.(1984-86)
85=CJ-5 (1981-83)
86=CJ-6(1981)
87=CJ-7(1981-86)
88=CJ-8, Scrambler(1981-86)
64=Comanche 2WD-6 Ft. Box(1986)
66=Comanche 2WD-7 Ft. Box(1986)
63=Comanche 4WD-6 Ft. Box(1986)
65=Comanche 4WD-7 Ft. Box(1986)
15=Grand Wagoneer 4 Dr.(1984-86)
25=J-10 Truck 7 Ft. Box(1981-84)
26=J10 Truck 8 Ft. Box(1981-86)
27=J-20 Truck 8 Ft. Box(1981-86)
15=Wagoneer 4 Dr.(1981-83)
75=Wagoneer 4WD-4 Dr.(1984-86)

BODY
CJ=CJ-5, CJ-6, CJ-7, CJ-8, Scrambler(1981-86)
MJ=Comanche Pickup(1986)

STYLES
SJ=Wagoneer(1981-83), Grand Wagoneer(1984-86), Cherokee(1981-83), J-10, J-20(1981-86)
XJ=Wagoneer(1984-86), Cherokee(1984-86)

AR = Use as Required - = Non Illustrated Part P.A.R. = Paint as Required

« RETURN TO GROUP INDEX

PANELS, FRONT END INNER AND WHEELHOUSE XJ CHEROKEE, XJ WAGONEER, COMANCHE
Figure 23A-3700

81J69 3700

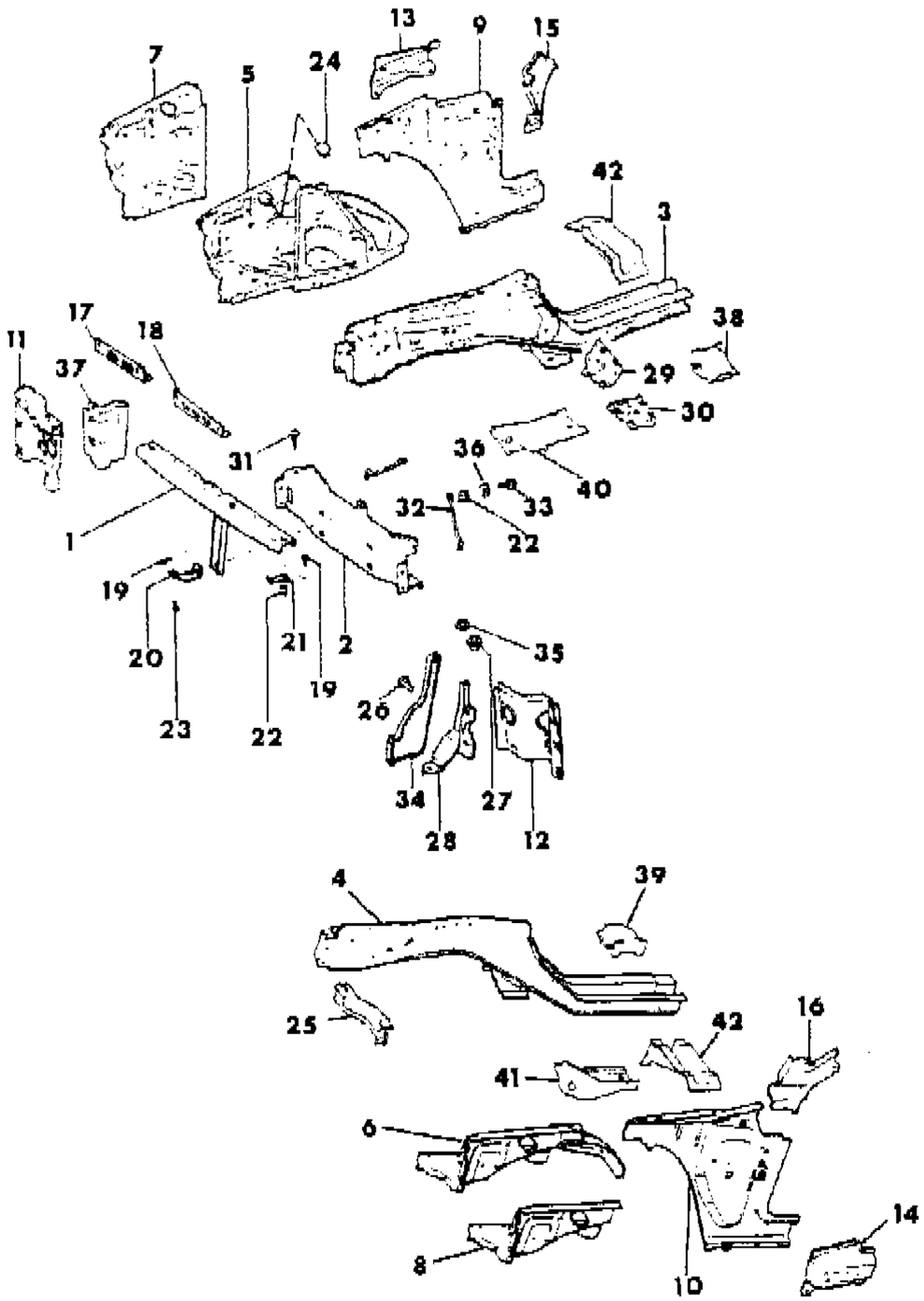

ITEM	PART NUMBER	QTY	BODY	MODEL	DESCRIPTION
1	5700 0030	1			CROSSMEMBER, Radiator
2	5500 0045	1			CROSSMEMBER, Front Sill
3-4					SILL, Body Side
	5700 0038-9	1			1984
	5700 0622-3	1			1985-86
5-6					WHEELHOUSE ASSEMBLY ***
	5700 0040-1	1			1984
	5700 0628-9	1			1985-86
7-8	5500 1198-9	1			WHEELHOUSE
9-10	5700 0016-7	1			PANEL, Cowl Side
11					BAFFLE, Radiator
	5700 0032	1			1984
	5700 0325	1			1985
	8350 2756	1			1986
12	5700 0033	1			BAFFLE, Radiator
13-14	5500 4564-5	1			REINFORCEMENT, Cowl
15-16	5700 0202-3	1			REINFORCEMENT, Pillar
17-18	5500 2064-5	1			BRACKET, Panel
19	3420 1301	8			SCREW
20	5500 3280	1			BRACKET, Support
21	5500 2321	1			BRACKET, Support
22	1150 3714	7			NUT
23	3420 1418	1			SCREW
24	3420 1750	2			PLUG
25	5500 2517	1			EXTENSION, Baffle
26	J400 3110	2			BUMPER, Baffle
27	3420 1348	2			NUT, Well
28	5500 3639	1			SUPPORT, Radiator
29-30	5500 6582-3	1			REINFORCEMENT, Inner Sill
31	J400 7117	2			FASTENER
32	5500 6545	2			BRACE, Baffle
33	3420 1768	4			SCREW
34	5500 2317	1			EXTENSION, Radiator Support
35	J420 0046	3			NUT
36	3420 2402	2			WASHER
37	5500 5028	1			SUPPORT, Radiator
38-39	5700 0870-1	1	MJ		BRACKET, Engine, Rear
40-41	5500 5148-9	1	MJ		REINFORCEMENT, Side Sill
42	5500 5008	2	MJ		SUPPORT, Cab

MODEL CODES
16=Cherokee 2 Dr.(1981-83)
17=Cherokee 2 Dr.(1981-83)
73=Cherokee 2WD-2 Dr.(1984-86)
74=Cherokee 2WD-4 Dr.(1984-86)
18=Cherokee 4 Dr.(1981-83)
77=Cherokee 4WD-2 Dr.(1984-86)
78=Cherokee 4WD-4 Dr.(1984-86)
85=CJ-5 (1981-83)
86=CJ-6(1981)
87=CJ-7(1981-86)
88=CJ-8, Scrambler(1981-86)
64=Comanche 2WD-6 Ft. Box(1986)
66=Comanche 2WD-7 Ft. Box(1986)
63=Comanche 4WD-6 Ft. Box(1986)
65=Comanche 4WD-7 Ft. Box(1986)
15=Grand Wagoneer 4 Dr.(1984-86)
25=J-10 Truck 7 Ft. Box(1981-84)
26=J10 Truck 8 Ft. Box(1981-86)
27=J-20 Truck 8 Ft. Box(1981-86)
15=Wagoneer 4 Dr.(1981-83)
75=Wagoneer 4WD-4 Dr.(1984-86)

BODY
CJ=CJ-5, CJ-6, CJ-7, CJ-8, Scrambler(1981-86)
MJ=Comanche Pickup(1986)

STYLES
SJ=Wagoneer(1981-83), Grand Wagoneer(1984-86), Cherokee(1981-83), J-10, J-20(1981-86)
XJ=Wagoneer(1984-86), Cherokee(1984-86)

AR = Use as Required - = Non Illustrated Part P.A.R. = Paint as Required

« RETURN TO GROUP INDEX

FENDERS, FRONT XJ CHEROKEE, XJ WAGONEER, COMANCHE
Figure 23A-3800

81J69 3800

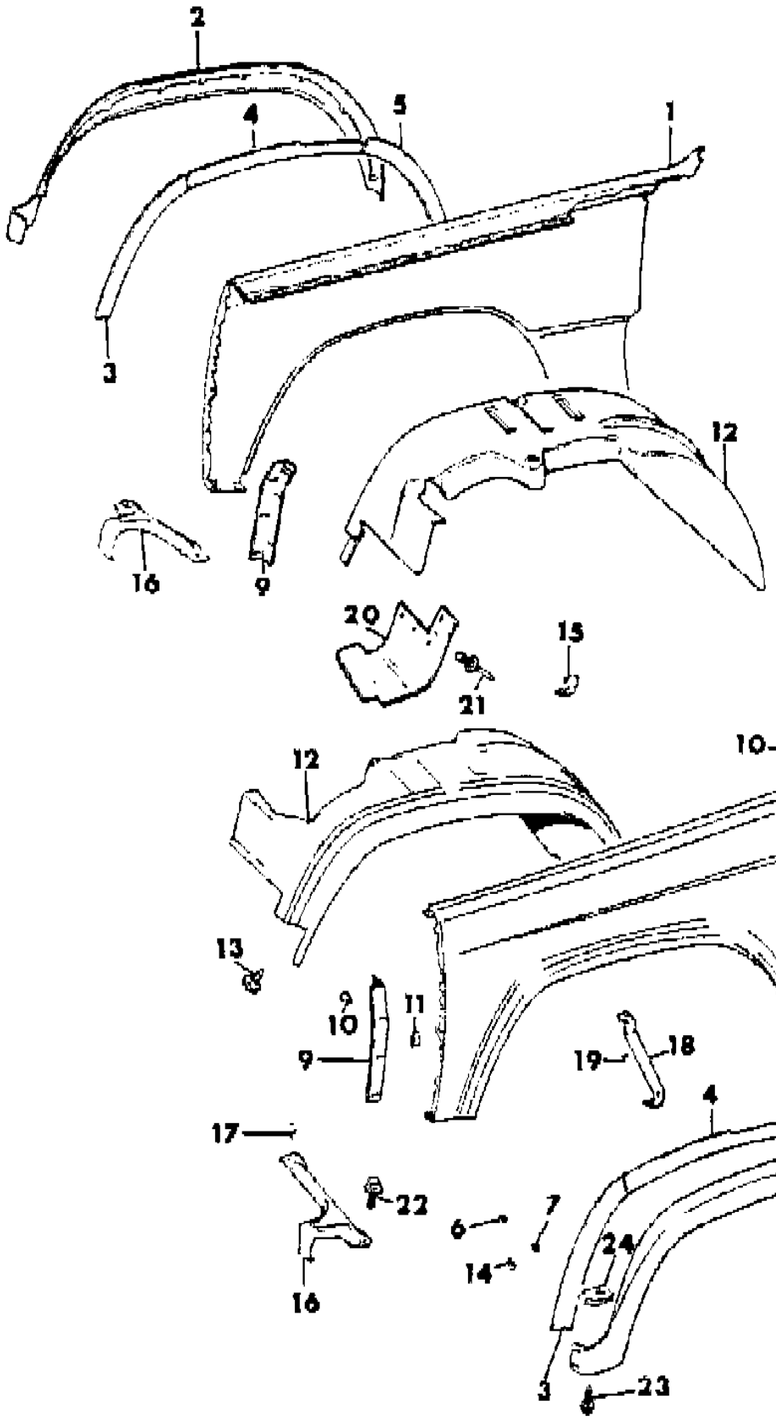

ITEM	PART NUMBER	QTY	BODY	MODEL	DESCRIPTION
1	5700 0066-7	1			FENDER
2					APPLIQUE, Fender
	5500 5252-3	1			1984-85
	5501 3610-1	1			1986
3	5500 3232-3	1			RETAINER, Applique
4	5500 3234	1			RETAINER, Applique
5	5500 3236-7	1			RETAINER, Applique
6	J420 0408	18			NUT
7	1150 4118	6			NUT
8	1150 2843	4			SCREW
9	5500 1112-3	1			SUPPORT
10	3420 1661	AR			SCREW
11	1150 3714	AR			NUT
12	5500 1890-1	1			PANEL, Inner Protective
13	J400 4919	16			FASTENER
14	J400 7117	14			SCREW
15	J368 9548	2			BUMPER, Hood
16	5500 4222-3	1			BRACE
17	1150 2453	2			SCREW
18	5500 3652	2			BRACE
19	3420 1208	2			RIVET
20	5500 6274	2			SEAL
21	3420 1631	8			RIVET
22	3420 1790	2			SCREW
23	3420 2358	4			SCREW
24	J044 5446	2			NUT

MODEL CODES

16=Cherokee 2 Dr.(1981-83)
17=Cherokee 2 Dr.(1981-83)
73=Cherokee 2WD-2 Dr.(1984-86)
74=Cherokee 2WD-4 Dr.(1984-86)
18=Cherokee 4 Dr.(1981-83)
77=Cherokee 4WD-2 Dr.(1984-86)
78=Cherokee 4WD-4 Dr.(1984-86)
85=CJ-5 (1981-83)
86=CJ-6(1981)
87=CJ-7(1981-86)
88=CJ-8, Scrambler(1981-86)
64=Comanche 2WD-6 Ft. Box(1986)
66=Comanche 2WD-7 Ft. Box(1986)
63=Comanche 4WD-6 Ft. Box(1986)
65=Comanche 4WD-7 Ft. Box(1986)
15=Grand Wagoneer 4 Dr.(1984-86)
25=J-10 Truck 7 Ft. Box(1981-84)
26=J10 Truck 8 Ft. Box(1981-86)
27=J-20 Truck 8 Ft. Box(1981-86)
15=Wagoneer 4 Dr.(1981-83)
75=Wagoneer 4WD-4 Dr.(1984-86)

BODY
CJ=CJ-5, CJ-6, CJ-7, CJ-8, Scrambler(1981-86)
MJ=Comanche Pickup(1986)

STYLES
SJ=Wagoneer(1981-83), Grand Wagoneer(1984-86), Cherokee(1981-83), J-10, J-20(1981-86)
XJ=Wagoneer(1984-86), Cherokee(1984-86)

AR = Use as Required - = Non Illustrated Part P.A.R. = Paint as Required

« RETURN TO GROUP INDEX

HOOD, LATCH AND HINGES XJ CHEROKEE, XJ WAGONEER, COMANCHE
Figure 23A-3900

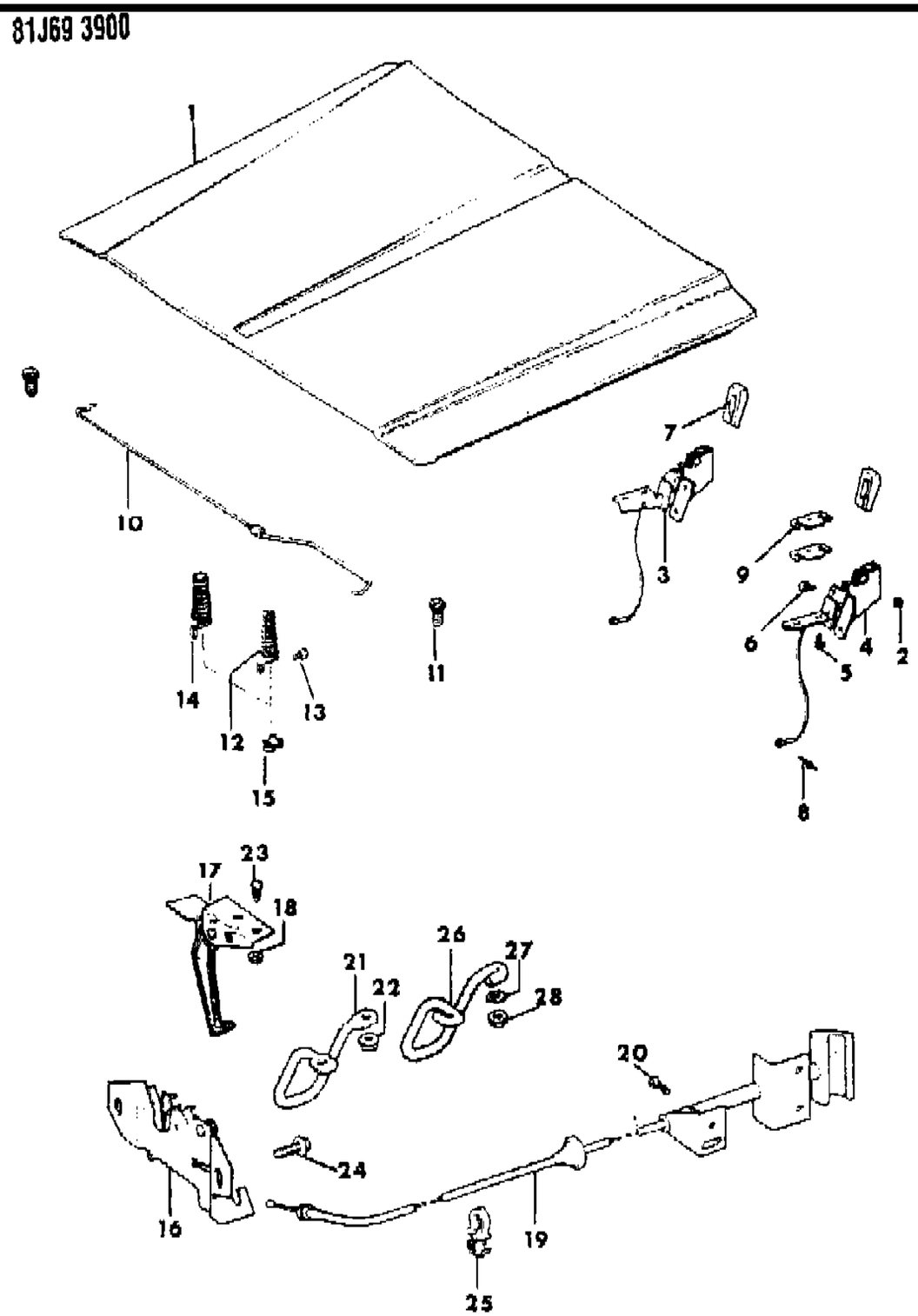

ITEM	PART NUMBER	QTY	BODY	MODEL	DESCRIPTION
1	5700 0051	1			HOOD
2	3420 1246	6			NUT
3-4	5500 0738-9	1			HINGE, Hood
5	3420 1818	4			SCREW
6	3420 1358	6			SCREW
7	5500 1982	2			SEAL
8	J400 5791	2			RIVET
9	J068 0435	4			SHIM
10	5500 2259	1			ROD
11	3420 1347	2			STOP, Hood
12	5500 0737	1			SPRING
13	3420 1301	1			SCREW
14	5500 6276	1			SPRING
15	1150 3714	2			NUT
16	5500 0731	1			LOCK ASSEMBLY, Hood
17	5500 0735	1			LOCK ASSEMBLY, Hood
18	3420 1680	2			NUT
19					CABLE, Hood Release
	5500 0732	1			1984-85: Gas
	8350 2175	1			1985: Diesel
	8350 2175	1			1986
20	3420 1453	3			SCREW
21	5500 2246	1			STRIKER, Latch
22	J420 0046	2			NUT
23	1150 3765	2			SCREW
24	3420 1439	2			SCREW
25	3420 1966	1			CLIP
26	5500 9385	1			STRIKER, Latch
27	1150 0306	2			WASHER
28	S150 1059	2			NUT

MODEL CODES

16=Cherokee 2 Dr.(1981-83)
17=Cherokee 2 Dr.(1981-83)
73=Cherokee 2WD-2 Dr.(1984-86)
74=Cherokee 2WD-4 Dr.(1984-86)
18=Cherokee 4 Dr.(1981-83)
77=Cherokee 4WD-2 Dr.(1984-86)
78=Cherokee 4WD-4 Dr.(1984-86)
85=CJ-5 (1981-83)
86=CJ-6(1981)
87=CJ-7(1981-86)
88=CJ-8, Scrambler(1981-86)
64=Comanche 2WD-6 Ft. Box(1986)
66=Comanche 2WD-7 Ft. Box(1986)
63=Comanche 4WD-6 Ft. Box(1986)
65=Comanche 4WD-7 Ft. Box(1986)
15=Grand Wagoneer 4 Dr.(1984-86)
25=J-10 Truck 7 Ft. Box(1981-84)
26=J10 Truck 8 Ft. Box(1981-86)
27=J-20 Truck 8 Ft. Box(1981-86)
15=Wagoneer 4 Dr.(1981-83)
75=Wagoneer 4WD-4 Dr.(1984-86)

BODY
CJ=CJ-5, CJ-6, CJ-7, CJ-8, Scrambler(1981-86)
MJ=Comanche Pickup(1986)

STYLES
SJ=Wagoneer(1981-83), Grand Wagoneer(1984-86), Cherokee(1981-83), J-10, J-20(1981-86)
XJ=Wagoneer(1984-86), Cherokee(1984-86)

AR = Use as Required - = Non Illustrated Part P.A.R. = Paint as Required

« RETURN TO GROUP INDEX

PANELS, COWL AND DASH XJ CHEROKEE, XJ WAGONEER, COMANCHE
Figure 23A-4000

81J69 4000

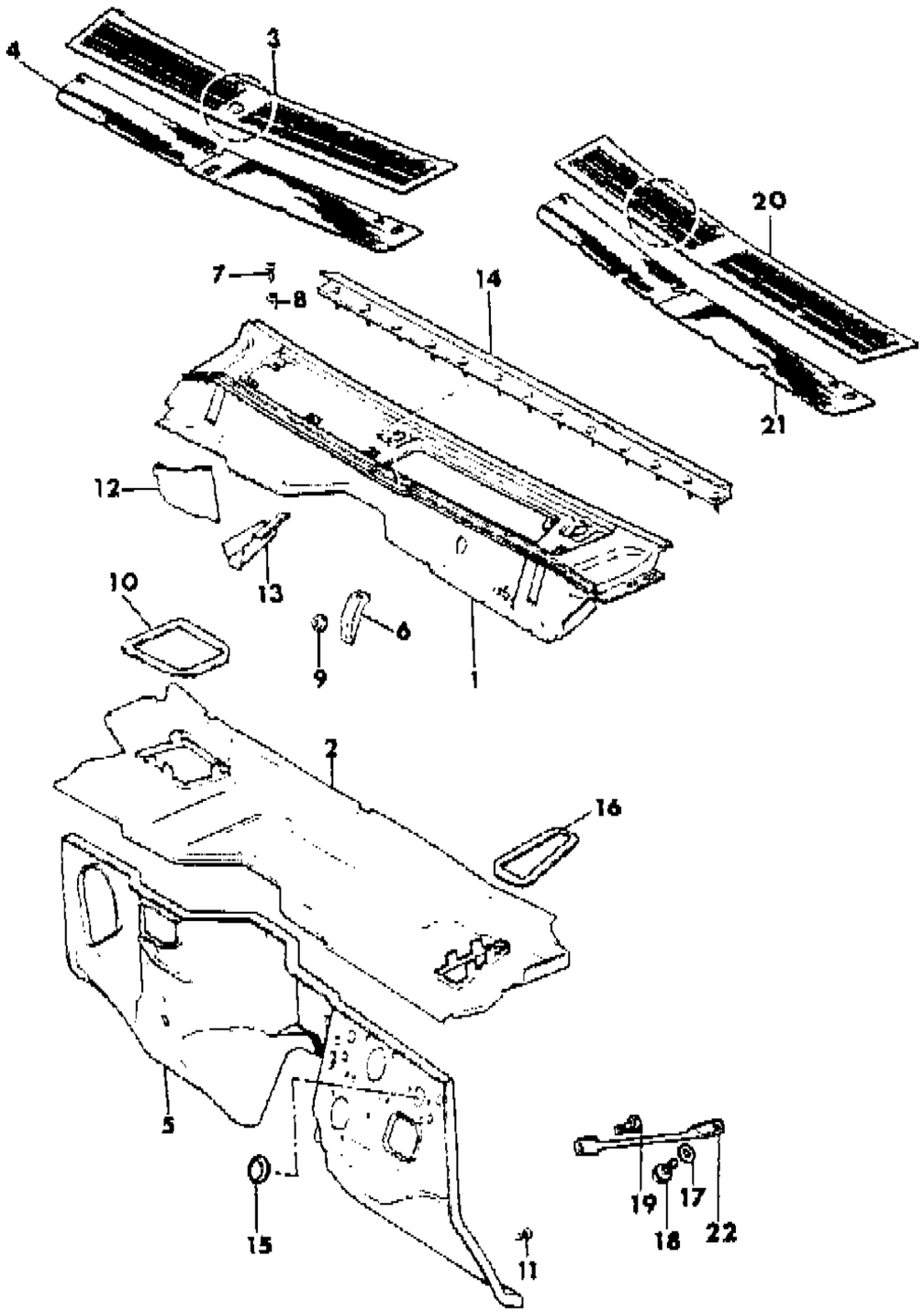

ITEM	PART NUMBER	QTY	BODY	MODEL	DESCRIPTION
1					PANEL, Cowl Top
	5700 0073	1			1984-85
	5700 1352	1			1986
2					PANEL, Air Chamber
	5700 0021	1			1984-85
	5700 1647	1			1986
3	5500 0928	1			GRILLE, Cowl Top Single Windshield Washer Nozzle in Center
4	5500 1282	1			SCREEN, Grille
5					PANEL, Dash
	5700 0031	1			1984-85
	5700 1289	1			1986
6	5500 4869	1			BRACKET, Extension
7	3420 1230	8			SCREW
8	J400 5242	6			NUT
9	3420 1358	2			NUT
10	5500 1008	1			SEAL, Heater Opening
11	J400 7117	4			FASTENER
12	5500 6544	1			SHIELD, Plenum Drain
13	5500 4918	1			SHIELD, Cowl Top
14	5500 2649	1			SEAL, Cowl Top
15	J400 0334	1			PLUG
16	5500 1009	1			SEAL, Heater Opening
17	5500 5519	1			WASHER
18	1150 3451	1			BOLT
19	J018 0125	1			BOLT
20	5500 9758	1			GRILLE, Cowl Top Two Windshield Washer Nozzles
21	5500 8833	1			SCREEN, Grille
22	5500 6271	1			BRACE

MODEL CODES

16=Cherokee 2 Dr.(1981-83)	78=Cherokee 4WD-4 Dr.(1984-86)	64=Comanche 2WD-6 Ft. Box(1986)	25=J-10 Truck 7 Ft. Box(1981-84)
17=Cherokee 2 Dr.(1981-83)	85=CJ-5 (1981-83)	66=Comanche 2WD-7 Ft. Box(1986)	26=J10 Truck 8 Ft. Box(1981-86)
73=Cherokee 2WD-2 Dr.(1984-86)	86=CJ-6(1981)	63=Comanche 4WD-6 Ft. Box(1986)	27=J-20 Truck 8 Ft. Box(1981-86)
74=Cherokee 2WD-4 Dr.(1984-86)	87=CJ-7(1981-86)	65=Comanche 4WD-7 Ft. Box(1986)	15=Wagoneer 4 Dr.(1981-83)
18=Cherokee 4 Dr.(1981-83)	88=CJ-8, Scrambler(1981-86)	15=Grand Wagoneer 4 Dr.(1984-86)	75=Wagoneer 4WD-4 Dr.(1984-86)
77=Cherokee 4WD-2 Dr.(1984-86)			

BODY
CJ=CJ-5, CJ-6, CJ-7, CJ-8, Scrambler(1981-86)
MJ=Comanche Pickup(1986)

STYLES
SJ=Wagoneer(1981-83), Grand Wagoneer(1984-86), Cherokee(1981-83), J-10, J-20(1981-86)
XJ=Wagoneer(1984-86), Cherokee(1984-86)

AR = Use as Required - = Non Illustrated Part P.A.R. = Paint as Required

« RETURN TO GROUP INDEX

MIRROR INSIDE REAR VIEW XJ CHEROKEE, XJ WAGONEER, COMANCHE
Figure 23A-4100

81J69 4100

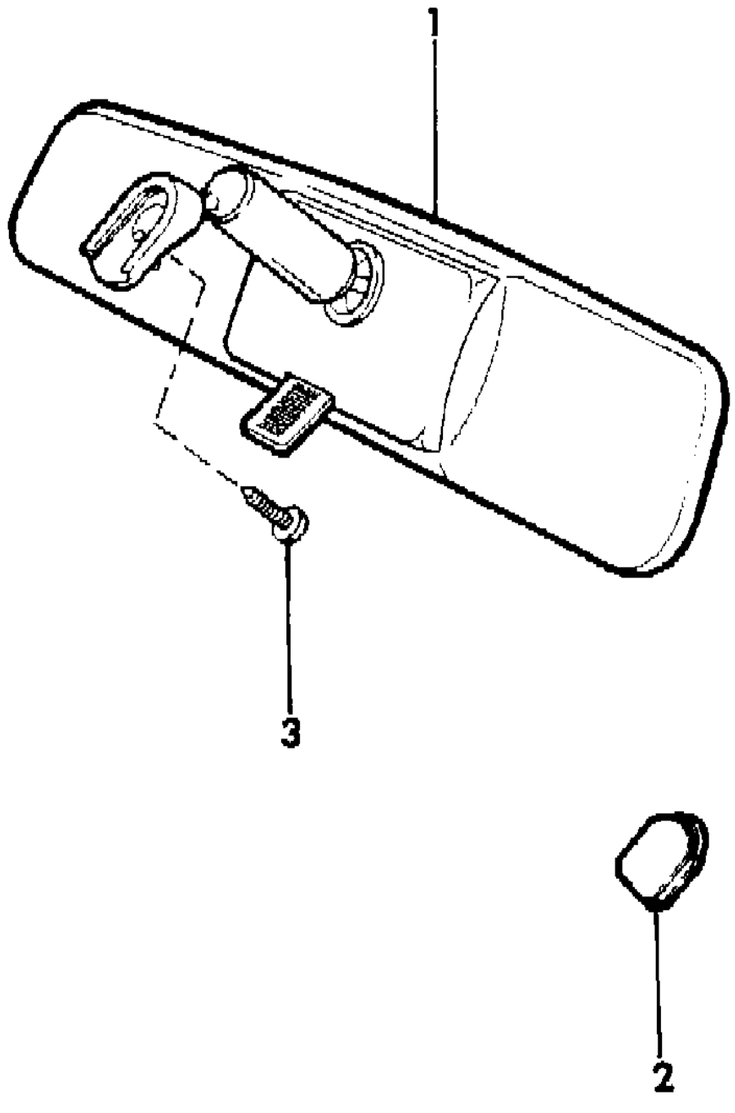

ITEM	PART NUMBER	QTY	BODY	MODEL	DESCRIPTION
1					MIRROR, Inside Rear View
	J374 3670	1			US, CANADA
	J575 6124	1			1984: EXPORT
	J374 3670	1			1985: EXPORT
2	J365 7374	1			SUPPORT, Inside Rear View Mirror Mounting, When installing a Mirror Support, use Locktite #312 Adhesive and the Accelerator for Locktite #312
3	J400 5766	1			SCREW

MODEL CODES

16=Cherokee 2 Dr.(1981-83)	78=Cherokee 4WD-4 Dr.(1984-86)	64=Comanche 2WD-6 Ft. Box(1986)	25=J-10 Truck 7 Ft. Box(1981-84)
17=Cherokee 2 Dr.(1981-83)	85=CJ-5 (1981-83)	66=Comanche 2WD-7 Ft. Box(1986)	26=J10 Truck 8 Ft. Box(1981-86)
73=Cherokee 2WD-2 Dr.(1984-86)	86=CJ-6(1981)	63=Comanche 4WD-6 Ft. Box(1986)	27=J-20 Truck 8 Ft. Box(1981-86)
74=Cherokee 2WD-4 Dr.(1984-86)	87=CJ-7(1981-86)	65=Comanche 4WD-7 Ft. Box(1986)	15=Wagoneer 4 Dr.(1981-83)
18=Cherokee 4 Dr.(1981-83)	88=CJ-8, Scrambler(1981-86)	15=Grand Wagoneer 4 Dr.(1984-86)	75=Wagoneer 4WD-4 Dr.(1984-86)
77=Cherokee 4WD-2 Dr.(1984-86)			

BODY
CJ=CJ-5, CJ-6, CJ-7, CJ-8, Scrambler(1981-86)
MJ=Comanche Pickup(1986)

STYLES
SJ=Wagoneer(1981-83), Grand Wagoneer(1984-86), Cherokee(1981-83), J-10, J-20(1981-86)
XJ=Wagoneer(1984-86), Cherokee(1984-86)

AR = Use as Required - = Non Illustrated Part P.A.R. = Paint as Required

« RETURN TO GROUP INDEX

PANELS, BODY SIDE 2 DOOR XJ CHEROKEE
Figure 23A-4200

81J69 4200

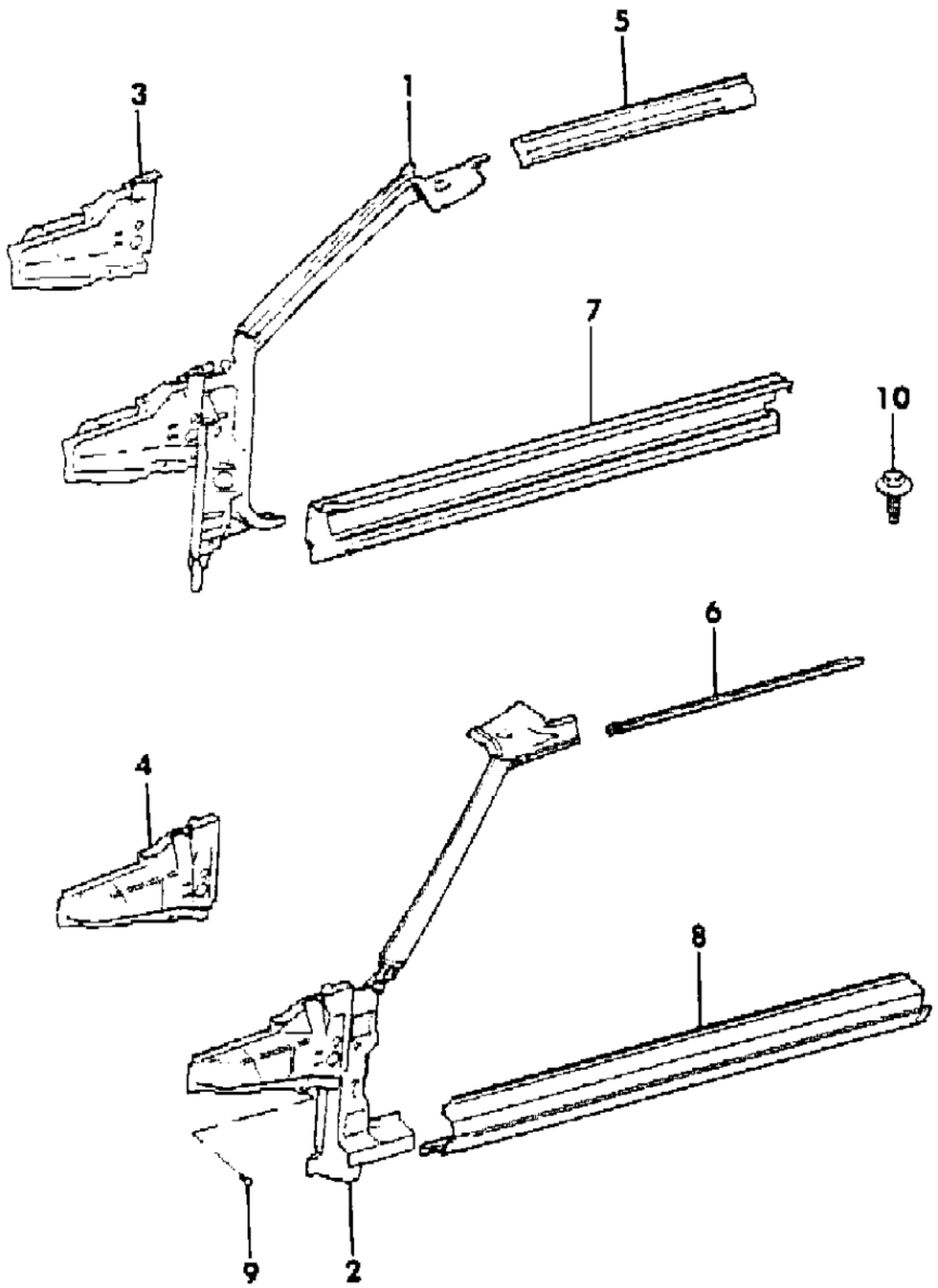

ITEM	PART NUMBER	QTY	BODY	MODEL	DESCRIPTION
1					PILLAR, Hinge, Right
	5700 0124	1			1984-85
	5700 0993	1			1986
2					PILLAR, Hinge, Left
	5700 0125	1			1984-85
	5700 0996	1			1986
3-4	5500 0848-9	1			PANEL, Cowl Side
5-6	5500 1006-7	1			RAIL, Roof Side
7-8	5500 1274-5	4			PANEL, Rocker
9	J400 7117	4			FASTENER, Cowl Panel
10	3420 1768	2			SCREW

MODEL CODES

16=Cherokee 2 Dr.(1981-83)
17=Cherokee 2 Dr.(1981-83)
73=Cherokee 2WD-2 Dr.(1984-86)
74=Cherokee 2WD-4 Dr.(1984-86)
18=Cherokee 4 Dr.(1981-83)
77=Cherokee 4WD-2 Dr.(1984-86)
78=Cherokee 4WD-4 Dr.(1984-86)
85=CJ-5 (1981-83)
86=CJ-6(1981)
87=CJ-7(1981-86)
88=CJ-8, Scrambler(1981-86)
64=Comanche 2WD-6 Ft. Box(1986)
66=Comanche 2WD-7 Ft. Box(1986)
63=Comanche 4WD-6 Ft. Box(1986)
65=Comanche 4WD-7 Ft. Box(1986)
15=Grand Wagoneer 4 Dr.(1984-86)
25=J-10 Truck 7 Ft. Box(1981-84)
26=J10 Truck 8 Ft. Box(1981-86)
27=J-20 Truck 8 Ft. Box(1981-86)
15=Wagoneer 4 Dr.(1981-83)
75=Wagoneer 4WD-4 Dr.(1984-86)

BODY
CJ=CJ-5, CJ-6, CJ-7, CJ-8, Scrambler(1981-86)
MJ=Comanche Pickup(1986)

STYLES
SJ=Wagoneer(1981-83), Grand Wagoneer(1984-86), Cherokee(1981-83), J-10, J-20(1981-86)
XJ=Wagoneer(1984-86), Cherokee(1984-86)

AR = Use as Required - = Non Illustrated Part P.A.R. = Paint as Required

« RETURN TO GROUP INDEX

PANELS, BODY SIDE 4 DOOR XJ CHEROKEE, XJ WAGONEER
Figure 23A-4300

81J69 4300

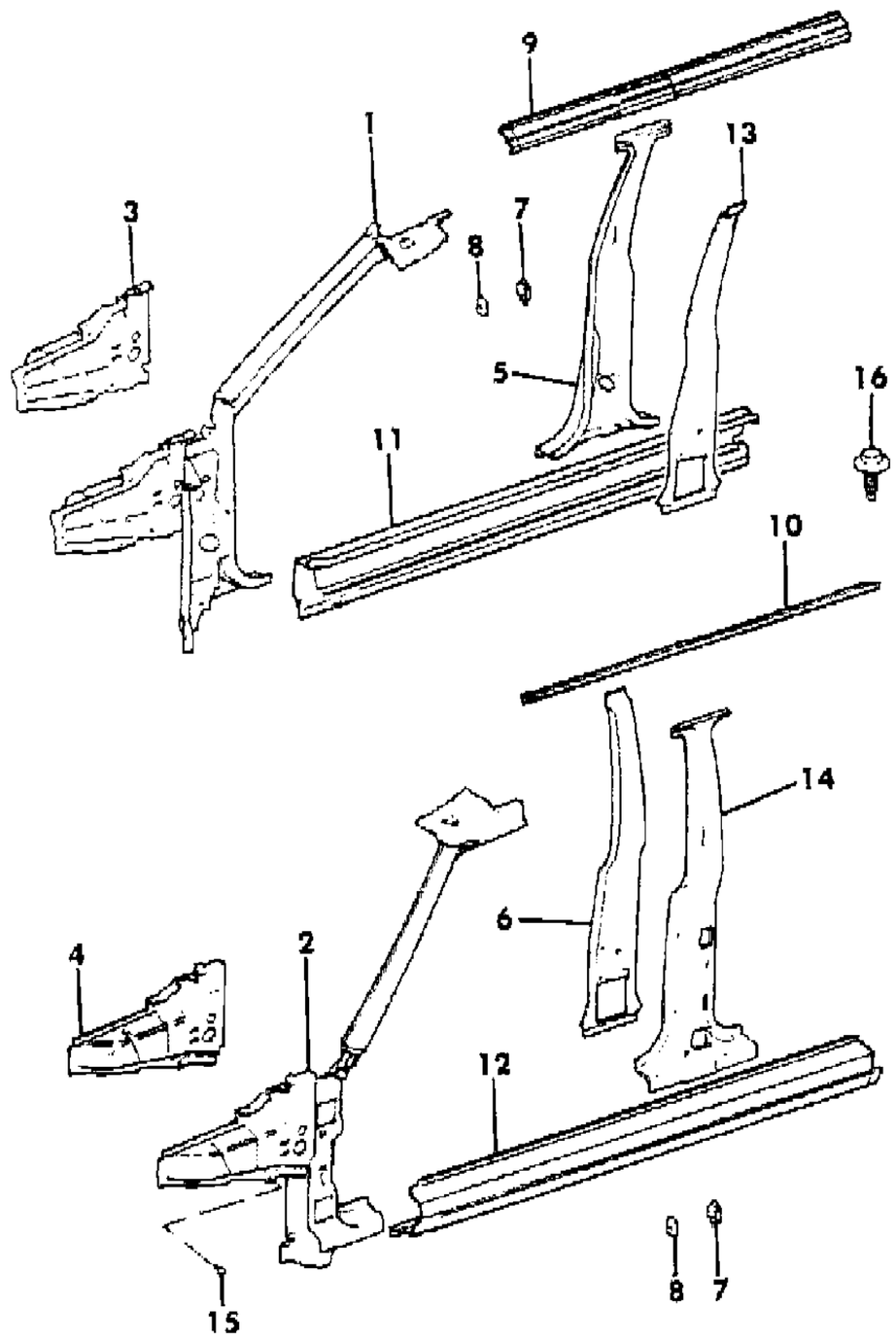

ITEM	PART NUMBER	QTY	BODY	MODEL	DESCRIPTION
1					PILLAR, Hinge, Right
	5700 0124	1			1984-85
	5700 0993	1			1986
2					PILLAR, Hinge, Left
	5700 0125	1			1984-85
	5700 0996	1			1986
3-4	5500 0848-9	1			PANEL, Cowl Side
5-6	5700 0126-7	1			PANEL, Center Pillar
7	5500 1284	2			RETAINER, Striker
8	5500 1286	2			PLATE, Striker
9-10	5500 0846-7	1			RAIL, Roof Side
11-12	5500 0174-5	1			PANEL, Rocker
13-14	5500 0104-5	1			REINFORCEMENT
15	J400 7117	4			FASTENER, Cowl Panel
16	3420 1768	2			SCREW

MODEL CODES

16=Cherokee 2 Dr.(1981-83)
17=Cherokee 2 Dr.(1981-83)
73=Cherokee 2WD-2 Dr.(1984-86)
74=Cherokee 2WD-4 Dr.(1984-86)
18=Cherokee 4 Dr.(1981-83)
77=Cherokee 4WD-2 Dr.(1984-86)
78=Cherokee 4WD-4 Dr.(1984-86)
85=CJ-5 (1981-83)
86=CJ-6(1981)
87=CJ-7(1981-86)
88=CJ-8, Scrambler(1981-86)
64=Comanche 2WD-6 Ft. Box(1986)
66=Comanche 2WD-7 Ft. Box(1986)
63=Comanche 4WD-6 Ft. Box(1986)
65=Comanche 4WD-7 Ft. Box(1986)
15=Grand Wagoneer 4 Dr.(1984-86)
25=J-10 Truck 7 Ft. Box(1981-84)
26=J10 Truck 8 Ft. Box(1981-86)
27=J-20 Truck 8 Ft. Box(1981-86)
15=Wagoneer 4 Dr.(1981-83)
75=Wagoneer 4WD-4 Dr.(1984-86)

BODY
CJ=CJ-5, CJ-6, CJ-7, CJ-8, Scrambler(1981-86)
MJ=Comanche Pickup(1986)

STYLES
SJ=Wagoneer(1981-83), Grand Wagoneer(1984-86), Cherokee(1981-83), J-10, J-20(1981-86)
XJ=Wagoneer(1984-86), Cherokee(1984-86)

AR = Use as Required - = Non Illustrated Part P.A.R. = Paint as Required

« RETURN TO GROUP INDEX

PANELS, BODY SIDE AND REAR COMANCHE
Figure 23A-4400

81J69 4400

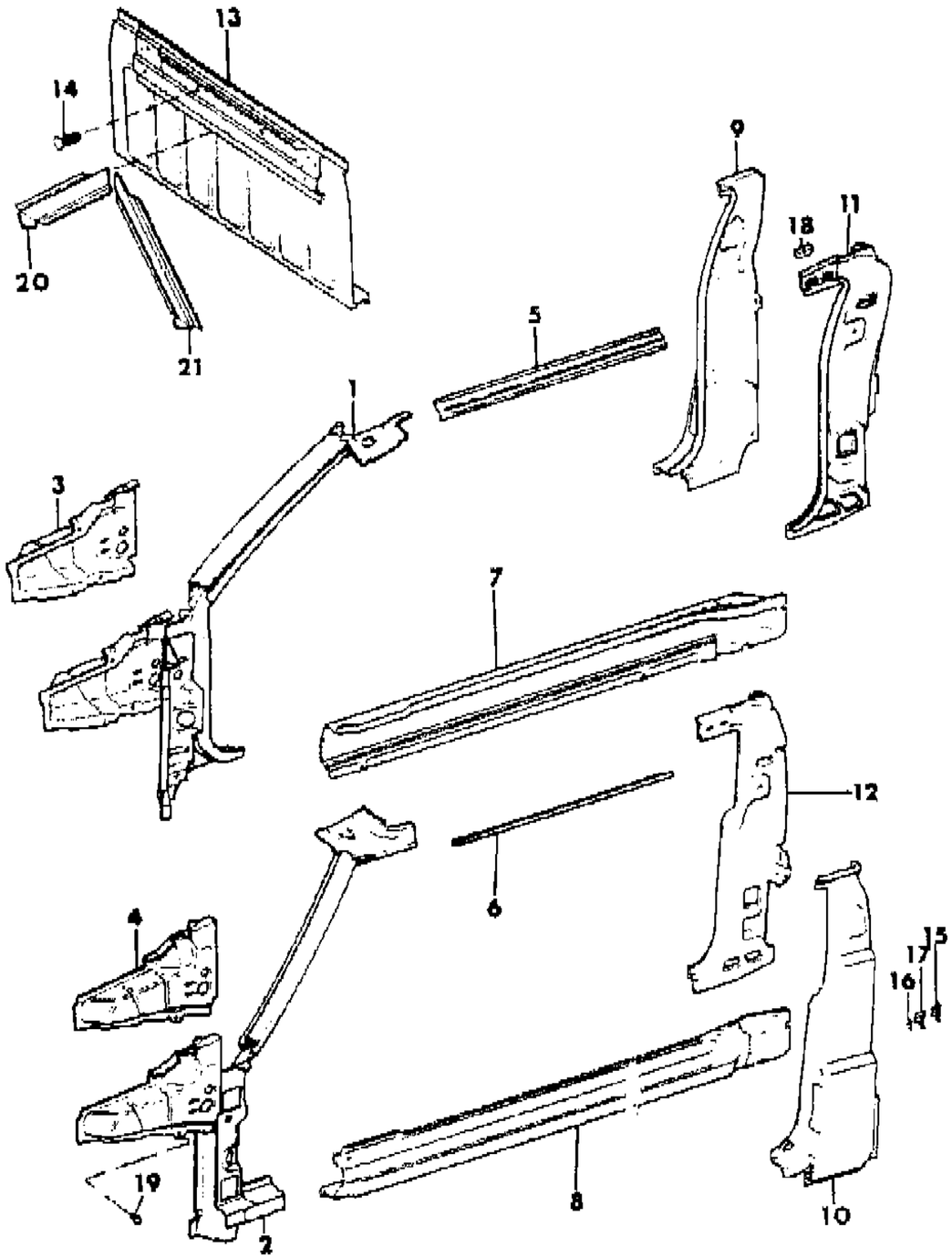

ITEM	PART NUMBER	QTY	BODY	MODEL	DESCRIPTION
1	5700 0993	1			PILLAR, Hinge
2	5700 0996	1			PILLAR, Hinge
3	5500 0848	1			PANEL, Cowl Side
4	5500 0849	1			PANEL, Cowl Side
5	5500 3420	1			RAIL, Roof Side
6	5500 3421	1			RAIL, Roof Side
7	5700 0856	1			PANEL, Rocker
8	5700 0857	1			PANEL, Rocker
9	5700 0858	1			PANEL, Rear Quarter
10	5700 0859	1			PANLE, Rear Quarter ***
11	5700 0852	1			REINFORCEMENT, Lock Pillar
12	5700 0853	1			REINFORCEMENT, Lock Pillar
13	5700 0923	1			PANEL, Cab Rear
14	J400 4919	2			FASTENER
15	5700 0160	2			PLATE ASSEMBLY, Striker ***
16	5500 1286	2			PLATE, Striker
17	5500 1284	2			RETAINER, Striker
18	5500 2816	2			PLATE, Shoulder Harness
19	J400 7117	4			FASTENER, Cowl Panel
20	5501 7970	1			REINFORCEMENT, Panel
21	5501 7971	1			REINFORCEMENT, Panel

MODEL CODES

16=Cherokee 2 Dr.(1981-83)
17=Cherokee 2 Dr.(1981-83)
73=Cherokee 2WD-2 Dr.(1984-86)
74=Cherokee 2WD-4 Dr.(1984-86)
18=Cherokee 4 Dr.(1981-83)
77=Cherokee 4WD-2 Dr.(1984-86)
78=Cherokee 4WD-4 Dr.(1984-86)
85=CJ-5 (1981-83)
86=CJ-6(1981)
87=CJ-7(1981-86)
88=CJ-8, Scrambler(1981-86)
64=Comanche 2WD-6 Ft. Box(1986)
66=Comanche 2WD-7 Ft. Box(1986)
63=Comanche 4WD-6 Ft. Box(1986)
65=Comanche 4WD-7 Ft. Box(1986)
15=Grand Wagoneer 4 Dr.(1984-86)
25=J-10 Truck 7 Ft. Box(1981-84)
26=J10 Truck 8 Ft. Box(1981-86)
27=J-20 Truck 8 Ft. Box(1981-86)
15=Wagoneer 4 Dr.(1981-83)
75=Wagoneer 4WD-4 Dr.(1984-86)

BODY
CJ=CJ-5, CJ-6, CJ-7, CJ-8, Scrambler(1981-86)
MJ=Comanche Pickup(1986)

STYLES
SJ=Wagoneer(1981-83), Grand Wagoneer(1984-86), Cherokee(1981-83), J-10, J-20(1981-86)
XJ=Wagoneer(1984-86), Cherokee(1984-86)

AR = Use as Required - = Non Illustrated Part P.A.R. = Paint as Required

« RETURN TO GROUP INDEX

PANELS, REAR QUARTER XJ CHEROKEE, XJ WAGONEER
Figure 23A-4500

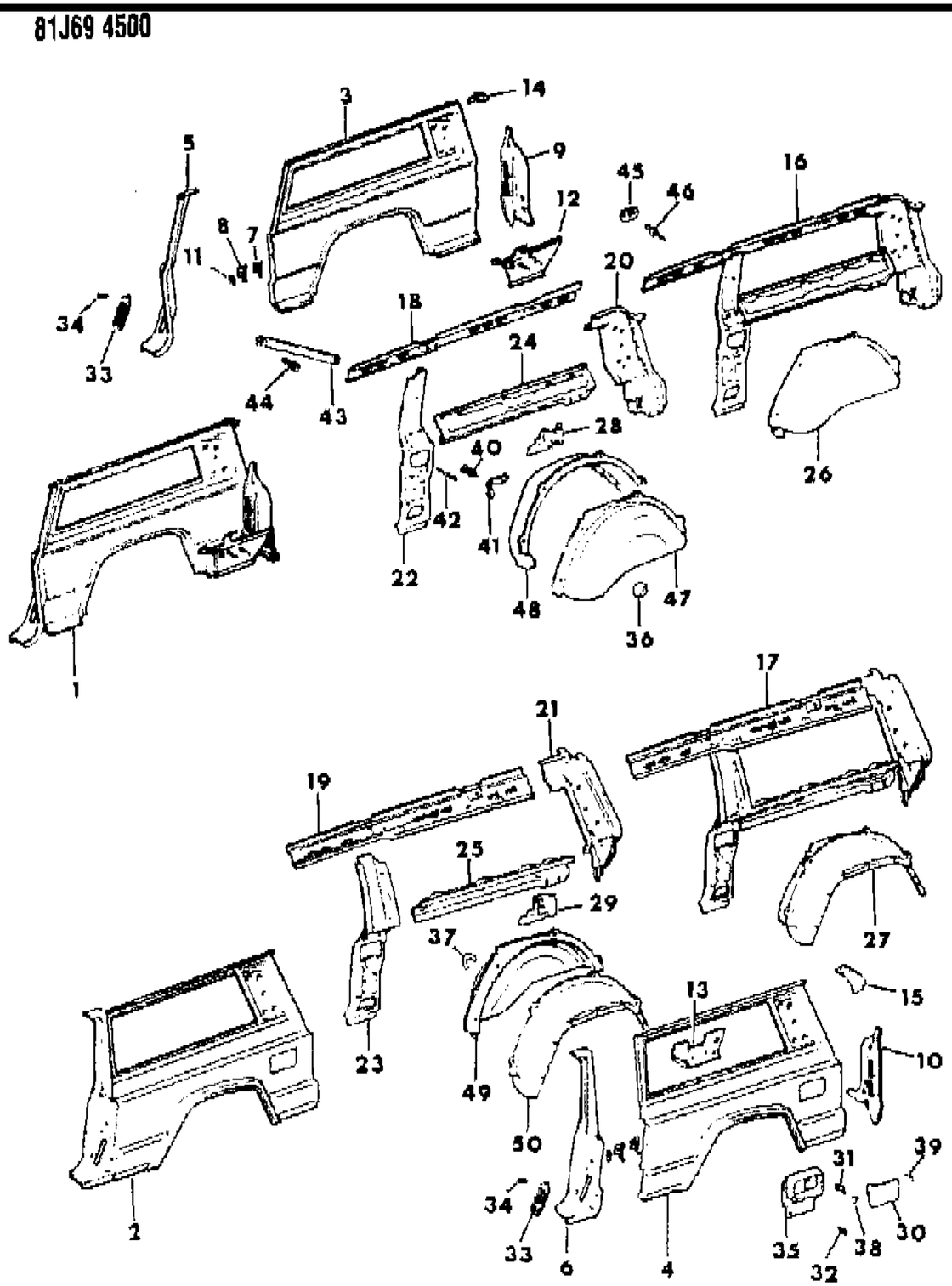

ITEM	PART NUMBER	QTY	BODY	MODEL	DESCRIPTION
1	5700 0150	1			PANEL ASSEMBLY, Rear Quarter
2	5700 0151	1			PANEL ASSEMBLY, Rear Quarter
3	5500 0160	1			PANEL, Rear Quarter
4	5500 0161	1			PANEL, Rear Quarter
5	5700 0148	1			PILLAR, Lock
6	5700 0149	1			PILLAR, Lock
7	5700 0576	2			PLATE ASSEMBLY, Striker ***
8	5500 1284	2			RETAINER, Striker
9	5500 4112	1			PANEL, Taillamp
10	5500 4113	1			PANEL, Taillamp
11	5500 1286	2			PLATE, Striker
12	5500 0026	12			PANEL, Side Extension
13	5500 0027	1			PANEL, Side Extension
14	5500 1014	1			EXTENSION, Panel
15	5500 1015	1			EXTENSION, Panel
16	5700 0174	1			PANEL, Rear Quarter Inner
17	5700 0175	1			PANEL, Rear Quarter Inner
18	5700 0164	1			RAIL, Roof Side
19	5700 0165	1			RAIL, Roof Side
20	5700 0156	1			PILLAR, Lift Door Opening
21	5700 0157	1			PILLAR, Lift Door Opening
22	5700 0158	1			REINFORCEMENT
23	5700 0159	1			REINFORCEMENT
24	5500 0162	1			Rail, Rear Quarter Belt ***
25	5500 0163	1			RAIL, Rear Quarter Belt
26	5700 0132	1			WHEELHOUSE
27	5700 0133	1			WHEELHOUSE
28	5500 2120	1			BRACKET, Seat Latch
29	5500 2121	1			BRACKET, Seat Latch
30	5500 0819	1			DOOR, Fuel Filler
31	5500 4206	1			SPRING, Door
32	T300 8001	2			SCREW
33	5500 1980	2			EXHAUSTER, Air ***
34	1150 1609	2			SCREW
35	5700 0177	1			HOUSING, Fuel Filler
36	5500 1231	1			BRACKET, Hinge Pivot
37	5500 0413	1			BRACKET, Hinge Pivot
38	J063 5787	1			BUMPER, Door
39	3420 1812	1			BUMPER, Door

MODEL CODES

16=Cherokee 2 Dr.(1981-83)
17=Cherokee 2 Dr.(1981-83)
73=Cherokee 2WD-2 Dr.(1984-86)
74=Cherokee 2WD-4 Dr.(1984-86)
18=Cherokee 4 Dr.(1981-83)
77=Cherokee 4WD-2 Dr.(1984-86)
78=Cherokee 4WD-4 Dr.(1984-86)
85=CJ-5 (1981-83)
86=CJ-6(1981)
87=CJ-7(1981-86)
88=CJ-8, Scrambler(1981-86)
64=Comanche 2WD-6 Ft. Box(1986)
66=Comanche 2WD-7 Ft. Box(1986)
63=Comanche 4WD-6 Ft. Box(1986)
65=Comanche 4WD-7 Ft. Box(1986)
15=Grand Wagoneer 4 Dr.(1984-86)
25=J-10 Truck 7 Ft. Box(1981-84)
26=J10 Truck 8 Ft. Box(1981-86)
27=J-20 Truck 8 Ft. Box(1981-86)
15=Wagoneer 4 Dr.(1981-83)
75=Wagoneer 4WD-4 Dr.(1984-86)

BODY
CJ=CJ-5, CJ-6, CJ-7, CJ-8, Scrambler(1981-86)
MJ=Comanche Pickup(1986)

STYLES
SJ=Wagoneer(1981-83), Grand Wagoneer(1984-86), Cherokee(1981-83), J-10, J-20(1981-86)
XJ=Wagoneer(1984-86), Cherokee(1984-86)

AR = Use as Required - = Non Illustrated Part P.A.R. = Paint as Required

PANELS, REAR QUARTER XJ CHEROKEE, XJ WAGONEER
Figure 23A-4500

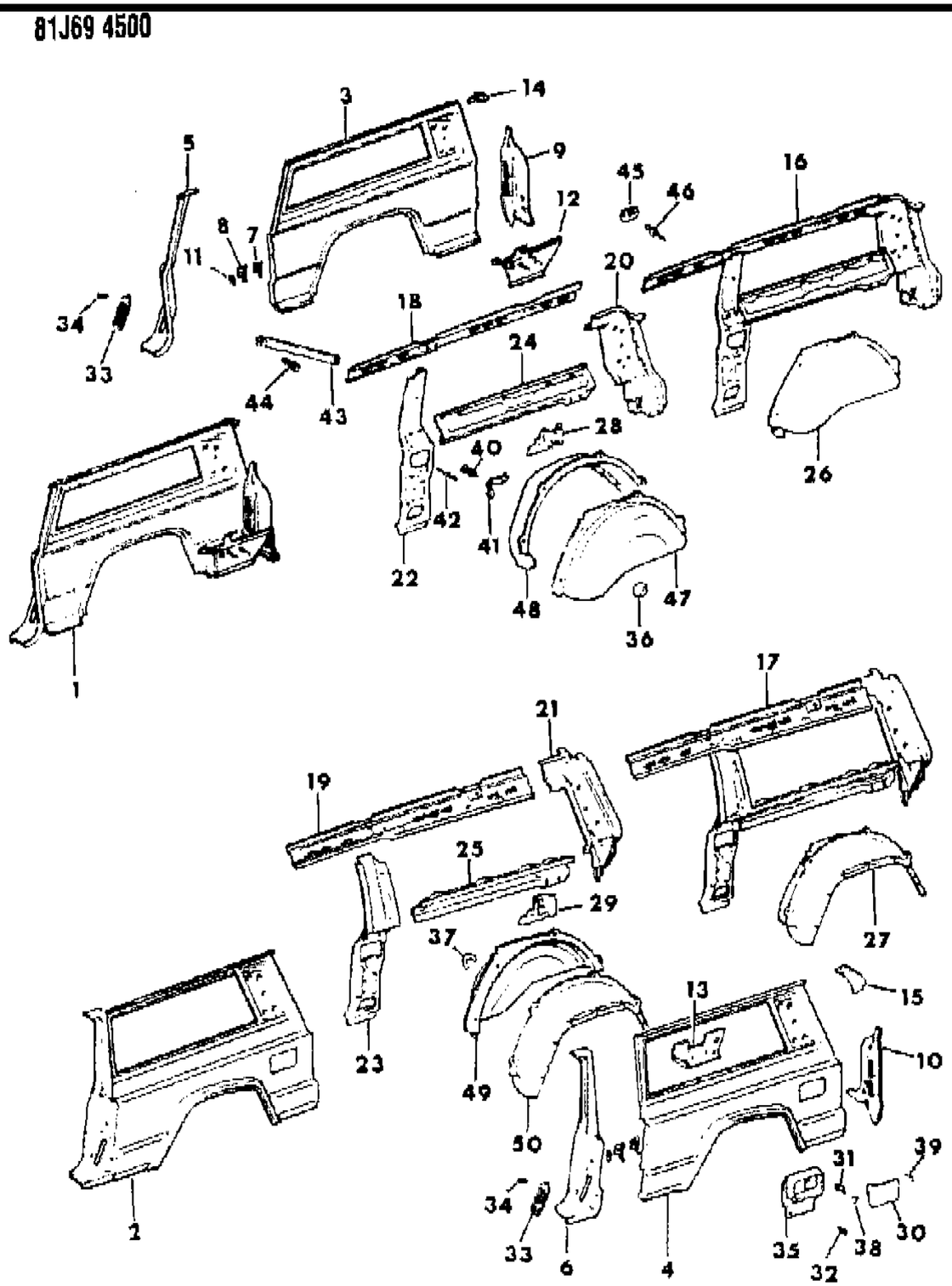

ITEM	PART NUMBER	QTY	BODY	MODEL	DESCRIPTION
40	J400 7117	2			FASTENER
41	5500 2662	4			BRACKET, Body
42	3420 1032	8			RIVET
43	5500 6218	2			BRACE, Door Lock Striker
44	3420 2036	4			SCREW
45	5500 2816	2			PLATE, Shoulder Harness, EXPORT
46	J400 5791	4			RIVET, EXPORT
47	5500 0146	1			PANEL, Wheelhouse Inner
48	5500 0144	1			PANEL, Wheelhouse Outer
49	5500 0147	1			PANEL, Wheelhouse, Inner
50	5500 0145	1			PANEL, Wheelhouse Outer

MODEL CODES

16=Cherokee 2 Dr.(1981-83)
17=Cherokee 2 Dr.(1981-83)
73=Cherokee 2WD-2 Dr.(1984-86)
74=Cherokee 2WD-4 Dr.(1984-86)
18=Cherokee 4 Dr.(1981-83)
77=Cherokee 4WD-2 Dr.(1984-86)
78=Cherokee 4WD-4 Dr.(1984-86)
85=CJ-5 (1981-83)
86=CJ-6(1981)
87=CJ-7(1981-86)
88=CJ-8, Scrambler(1981-86)
64=Comanche 2WD-6 Ft. Box(1986)
66=Comanche 2WD-7 Ft. Box(1986)
63=Comanche 4WD-6 Ft. Box(1986)
65=Comanche 4WD-7 Ft. Box(1986)
15=Grand Wagoneer 4 Dr.(1984-86)
25=J-10 Truck 7 Ft. Box(1981-84)
26=J10 Truck 8 Ft. Box(1981-86)
27=J-20 Truck 8 Ft. Box(1981-86)
15=Wagoneer 4 Dr.(1981-83)
75=Wagoneer 4WD-4 Dr.(1984-86)

BODY
CJ=CJ-5, CJ-6, CJ-7, CJ-8, Scrambler(1981-86)
MJ=Comanche Pickup(1986)

STYLES
SJ=Wagoneer(1981-83), Grand Wagoneer(1984-86), Cherokee(1981-83), J-10, J-20(1981-86)
XJ=Wagoneer(1984-86), Cherokee(1984-86)

AR = Use as Required - = Non Illustrated Part P.A.R. = Paint as Required

« RETURN TO GROUP INDEX

PANELS, REAR QUARTER 4 DOOR XJ CHEROKEE, XJ WAGONEER
Figure 23A-4600

81J69 4600

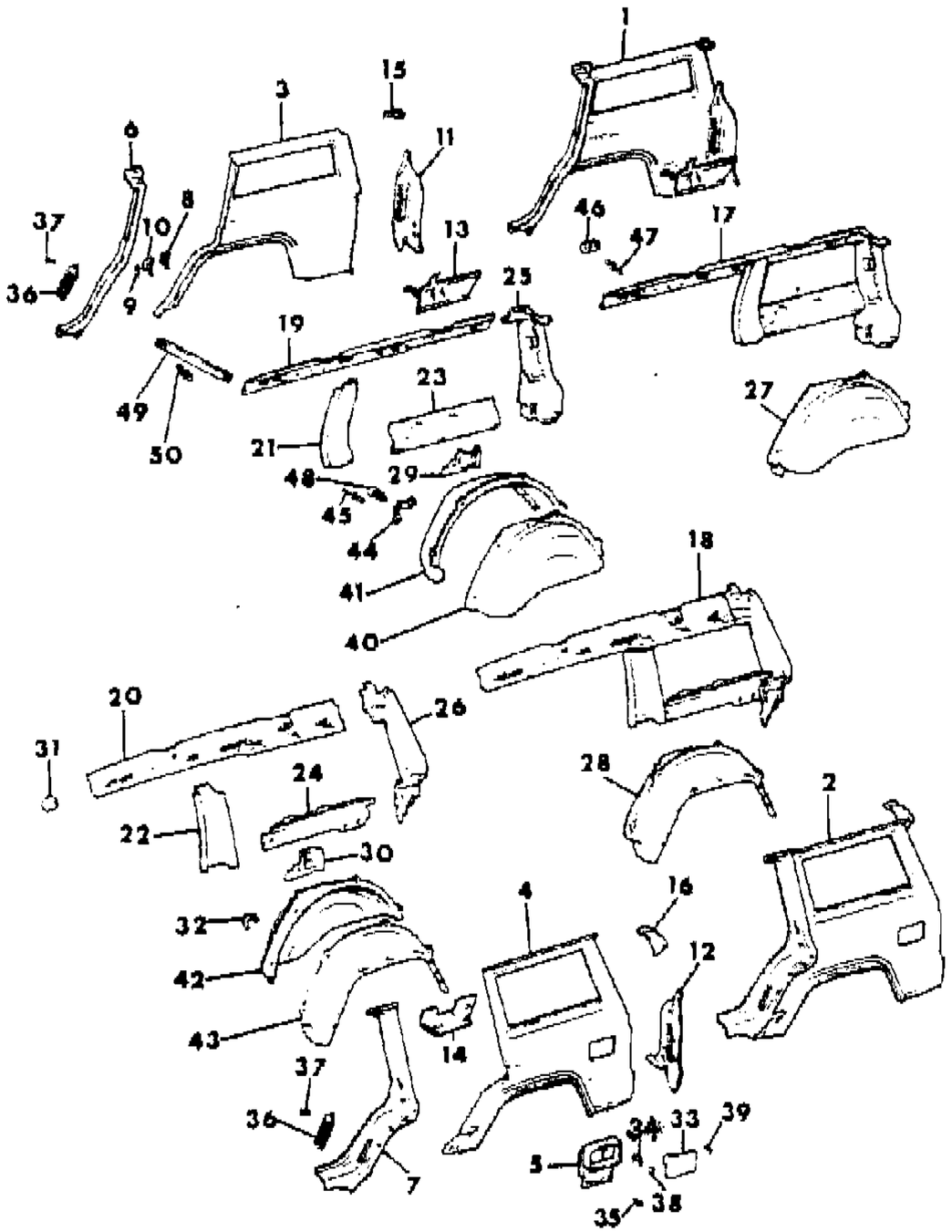

ITEM	PART NUMBER	QTY	BODY	MODEL	DESCRIPTION
1	5700 0130	1			PANEL ASSEMBLY, Rear Quarter
2	5700 0131	1			PANEL ASSEMBLY, Rear Quarter
3	5500 0094	1			PANEL, Rear Quarter
4	5500 0095	1			PANEL, Rear Quarter
5	5700 0177	1			HOUSING, Fuel Filler
6	5700 0128	1			PILLAR, Lock
7	5700 0129	1			PILLAR, Lock
8	5700 0160	2			PLATE ASSEMBLY, Striker ***
9	5500 1286	2			Plate, Striker ***
10	5500 1284	2			RETAINER, Striker
11	5500 4112	1			PANEL, Taillamp
12	5500 4113	1			PANEL, Taillamp
13	5500 0026	1			PANEL, Side Extension
14	5500 0027	1			PANEL, Side Extension
15	5500 1014	1			EXTENSION, Panel
16	5500 1015	1			EXTENSION, Panel
17	5700 0142	1			PANEL, Rear Quarter Inner
18	5700 0143	1			PANEL, Rear Quarter Inner
19	5500 0092	1			RAIL, Roof Side
20	5500 0093	1			RAIL, Roof Side
21	5500 0116	1			REINFORCEMENT
22	5500 0117	1			REINFORCEMENT
23	5500 0130	1			RAIL, Rear Quarter Belt
24	5500 0131	1			RAIL, Rear Quarter Belt
25	5700 0136	1			PILLAR, Lift Door Opening
26	5700 0137	1			PILLAR, Lift Door Opening
27	5700 0132	1			WHEELHOUSE
28	5700 0133	1			WHEELHOUSE
29	5500 2120	1			BRACKET, Seat Latch
30	5500 2121	1			BRACKET, Seat Latch
31	5500 1231	1			BRACKET, Hinge Pivot
32	5500 0413	1			BRACKET, Hinge Pivot
33	5500 0819	1			DOOR, Fuel Filler
34	5500 4206	1			SPRING, Door
35	T300 8001	2			SCREW
36	5500 1980	2			EXHAUSTER, Air ***
37	1150 1609	2			SCREW
38	J063 5787	1			BUMPER, Door
39	3420 1812	1			BUMPER, Door

MODEL CODES

16=Cherokee 2 Dr.(1981-83)
17=Cherokee 2 Dr.(1981-83)
73=Cherokee 2WD-2 Dr.(1984-86)
74=Cherokee 2WD-4 Dr.(1984-86)
18=Cherokee 4 Dr.(1981-83)
77=Cherokee 4WD-2 Dr.(1984-86)
78=Cherokee 4WD-4 Dr.(1984-86)
85=CJ-5 (1981-83)
86=CJ-6(1981)
87=CJ-7(1981-86)
88=CJ-8, Scrambler(1981-86)
64=Comanche 2WD-6 Ft. Box(1986)
66=Comanche 2WD-7 Ft. Box(1986)
63=Comanche 4WD-6 Ft. Box(1986)
65=Comanche 4WD-7 Ft. Box(1986)
15=Grand Wagoneer 4 Dr.(1984-86)
25=J-10 Truck 7 Ft. Box(1981-84)
26=J10 Truck 8 Ft. Box(1981-86)
27=J-20 Truck 8 Ft. Box(1981-86)
15=Wagoneer 4 Dr.(1981-83)
75=Wagoneer 4WD-4 Dr.(1984-86)

BODY
CJ=CJ-5, CJ-6, CJ-7, CJ-8, Scrambler(1981-86)
MJ=Comanche Pickup(1986)

STYLES
SJ=Wagoneer(1981-83), Grand Wagoneer(1984-86), Cherokee(1981-83), J-10, J-20(1981-86)
XJ=Wagoneer(1984-86), Cherokee(1984-86)

AR = Use as Required - = Non Illustrated Part P.A.R. = Paint as Required

« RETURN TO GROUP INDEX »

PANELS, REAR QUARTER 4 DOOR XJ CHEROKEE, XJ WAGONEER
Figure 23A-4600

81J69 4600

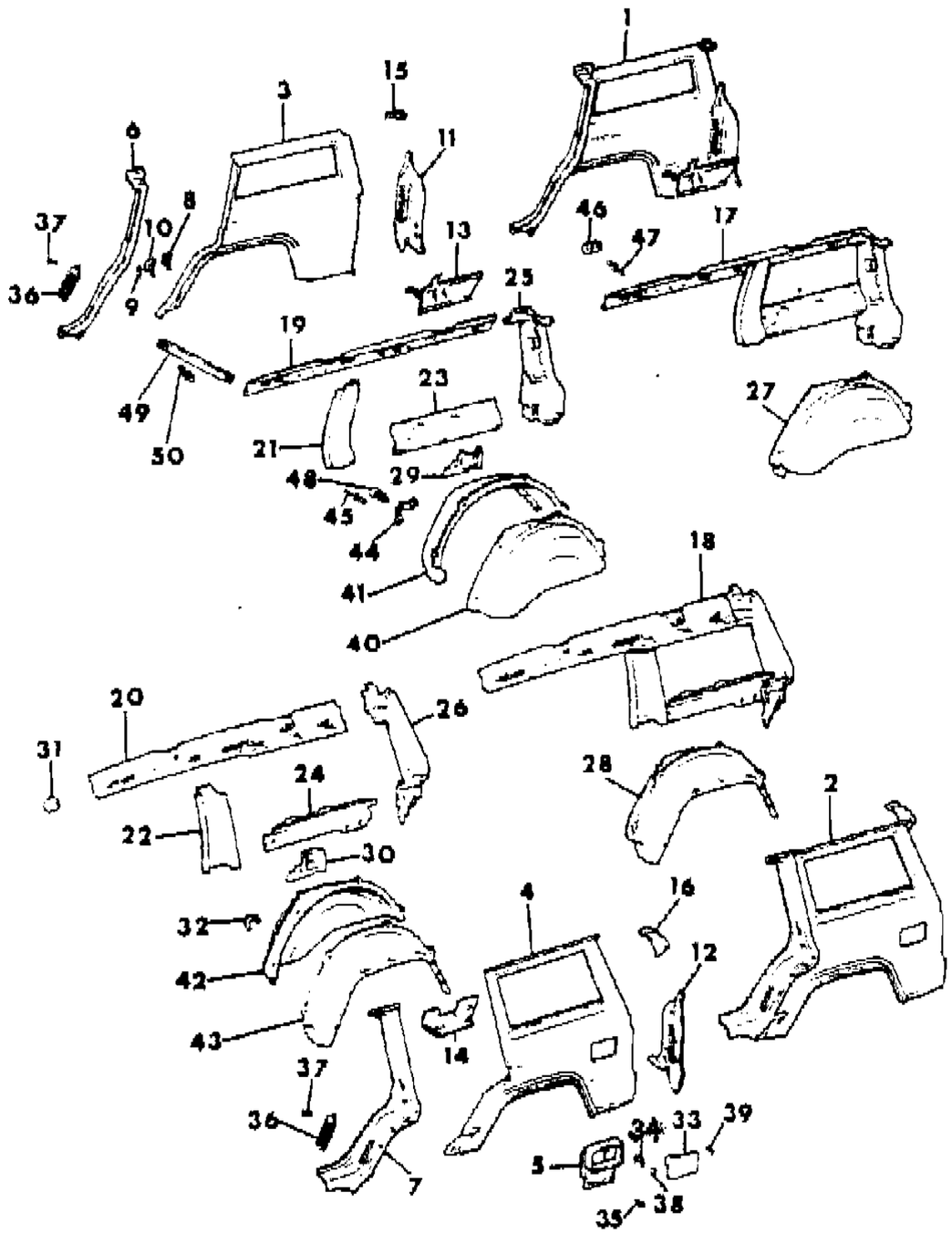

ITEM	PART NUMBER	QTY	BODY	MODEL	DESCRIPTION
40	5500 0146	1			PANEL, Wheelhouse Inner
41	5500 0144	1			PANEL, Wheelhouse Outer
42	5500 0147	1			PANEL, Wheelhouse Inner
43	5500 0145	1			PANEL, Wheelhouse Outer
44	5500 2662	4			BRACKET, Body
45	3420 1032	8			RIVET
46	5500 2816	2			PLATE, Shoulder Harness, EXPORT
47	J400 5791	4			RIVET, EXPORT
48	J400 7117	2			FASTENER
49	5500 6218	2			BRACE, Door Lock Striker
50	3420 2036	4			SCREW

MODEL CODES

16=Cherokee 2 Dr.(1981-83)
17=Cherokee 2 Dr.(1981-83)
73=Cherokee 2WD-2 Dr.(1984-86)
74=Cherokee 2WD-4 Dr.(1984-86)
18=Cherokee 4 Dr.(1981-83)
77=Cherokee 4WD-2 Dr.(1984-86)
78=Cherokee 4WD-4 Dr.(1984-86)
85=CJ-5 (1981-83)
86=CJ-6(1981)
87=CJ-7(1981-86)
88=CJ-8, Scrambler(1981-86)
64=Comanche 2WD-6 Ft. Box(1986)
66=Comanche 2WD-7 Ft. Box(1986)
63=Comanche 4WD-6 Ft. Box(1986)
65=Comanche 4WD-7 Ft. Box(1986)
15=Grand Wagoneer 4 Dr.(1984-86)
25=J-10 Truck 7 Ft. Box(1981-84)
26=J10 Truck 8 Ft. Box(1981-86)
27=J-20 Truck 8 Ft. Box(1981-86)
15=Wagoneer 4 Dr.(1981-83)
75=Wagoneer 4WD-4 Dr.(1984-86)

BODY
CJ=CJ-5, CJ-6, CJ-7, CJ-8, Scrambler(1981-86)
MJ=Comanche Pickup(1986)

STYLES
SJ=Wagoneer(1981-83), Grand Wagoneer(1984-86), Cherokee(1981-83), J-10, J-20(1981-86)
XJ=Wagoneer(1984-86), Cherokee(1984-86)

AR = Use as Required - = Non Illustrated Part P.A.R. = Paint as Required

« RETURN TO GROUP INDEX

APPLIQUES, REAR QUARTER PANEL XJ CHEROKEE, XJ WAGONEER, COMANCHE
Figure 23A-4700

81J69 4700

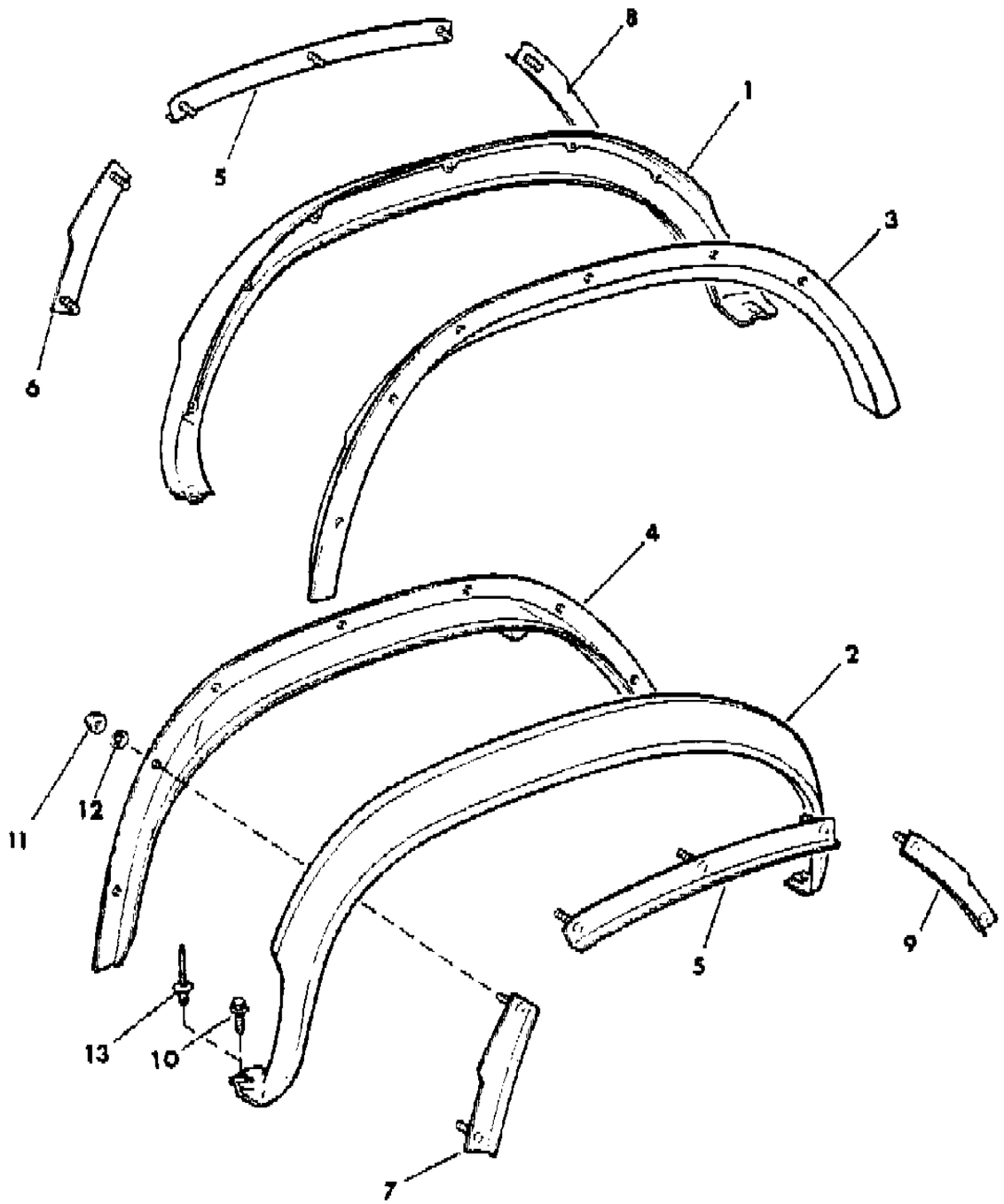

ITEM	PART NUMBER	QTY	BODY	MODEL	DESCRIPTION
1-2					APPLIQUE, Rear Quarter
	5500 5254-5	1	XJ		1984-85
	5501 3612-3	1	XJ		1986
	5501 3614-5	1	MJ		1986
3-4					PANEL, Inner Protective
	5500 4032-3	1	XJ		
	5500 6176-7	1	MJ		
5					RETAINER, Applique
	5500 3240	2	XJ		
	5500 7379	2	XJ		Japan
	5500 4991	2	MJ		
6-7					RETAINER, Applique
	5500 3238-9	1	XJ		
	5500 4994-5	1	MJ		
8					RETAINER, Applique, Right
	5500 3242	1	XJ		
	5500 4995	1	MJ		
9					RETAINER, Applique, Left
	5500 3243	1	XJ		
	5500 4994	1	MJ		
10	1150 2864	4			SCREW
11					NUT
	J420 0408	14	XJ		
	J400 6866	10	MJ		
12	1150 4118	6			NUT
13	3420 2203	4			RIVET, Japan

MODEL CODES
16=Cherokee 2 Dr.(1981-83)
17=Cherokee 2 Dr.(1981-83)
73=Cherokee 2WD-2 Dr.(1984-86)
74=Cherokee 2WD-4 Dr.(1984-86)
18=Cherokee 4 Dr.(1981-83)
77=Cherokee 4WD-2 Dr.(1984-86)
78=Cherokee 4WD-4 Dr.(1984-86)
85=CJ-5 (1981-83)
86=CJ-6(1981)
87=CJ-7(1981-86)
88=CJ-8, Scrambler(1981-86)
64=Comanche 2WD-6 Ft. Box(1986)
66=Comanche 2WD-7 Ft. Box(1986)
63=Comanche 4WD-6 Ft. Box(1986)
65=Comanche 4WD-7 Ft. Box(1986)
15=Grand Wagoneer 4 Dr.(1984-86)
25=J-10 Truck 7 Ft. Box(1981-84)
26=J10 Truck 8 Ft. Box(1981-86)
27=J-20 Truck 8 Ft. Box(1981-86)
15=Wagoneer 4 Dr.(1981-83)
75=Wagoneer 4WD-4 Dr.(1984-86)

BODY
CJ=CJ-5, CJ-6, CJ-7, CJ-8, Scrambler(1981-86)
MJ=Comanche Pickup(1986)

STYLES
SJ=Wagoneer(1981-83), Grand Wagoneer(1984-86), Cherokee(1981-83), J-10, J-20(1981-86)
XJ=Wagoneer(1984-86), Cherokee(1984-86)

AR = Use as Required - = Non Illustrated Part P.A.R. = Paint as Required

« RETURN TO GROUP INDEX

PANELS, LOAD BARRIER AND AUXILLIARY FLOOR FRENCH COMMERICAL PACKAGE XJ CHEROKEE 2 DOOR, 79
Figure 23A-4800

81J69 4800

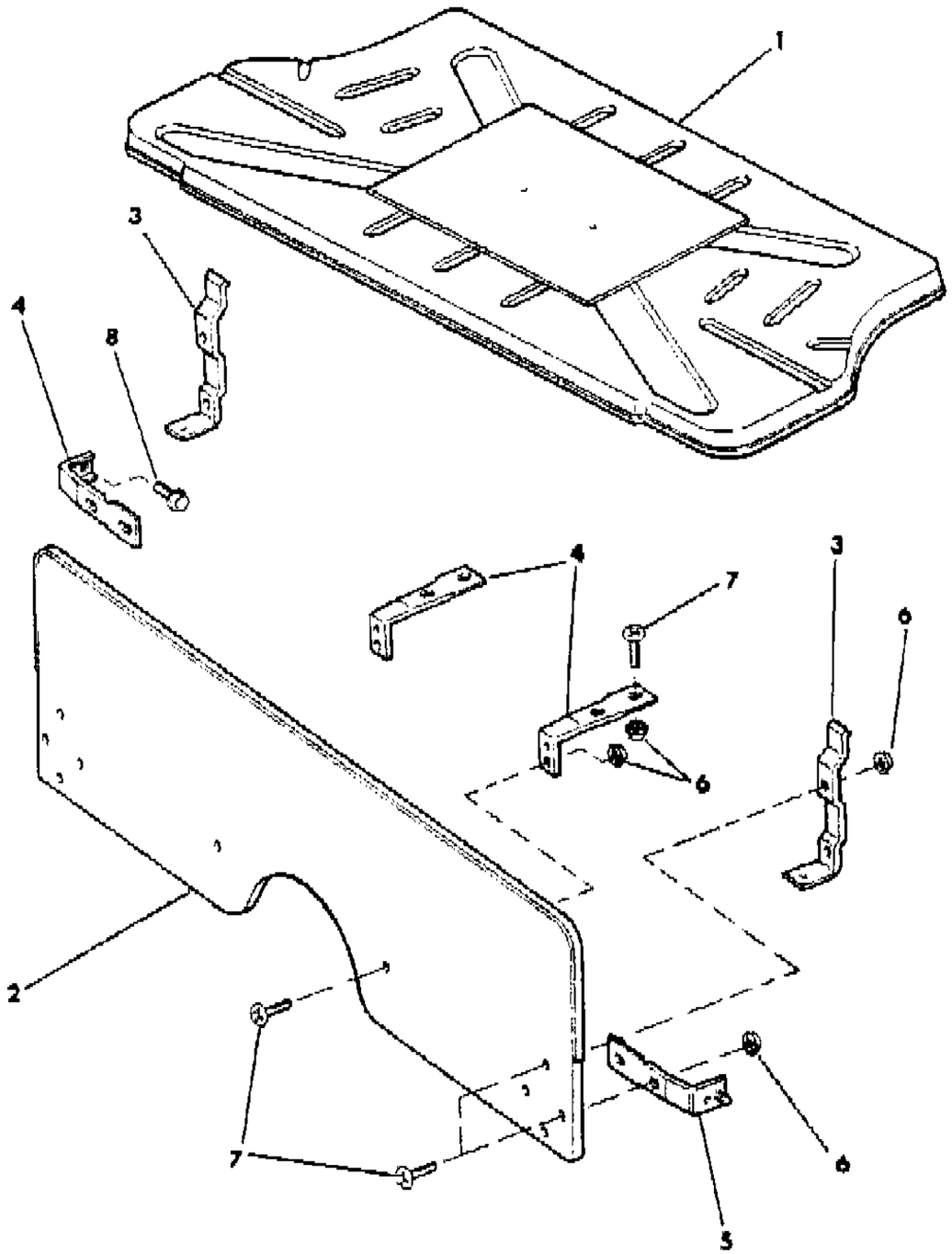

ITEM	PART NUMBER	QTY	BODY	MODEL	DESCRIPTION
1	5501 6958	1			PANEL, Floor
2					PANEL, Load Barrier
	5500 8798	1			Medium Blue
	5501 5361	1			Cordovan
3	5500 8799	2			BRACKET, Floor, P.A.R.
4	5500 8800	1			BRACKET, Sill, P.A.R.
5	5500 8801	1			BRACKET, Sill, P.A.R.
6	J400 3909	4			NUT
7	J400 5651	4			SCREW
8	3420 1749	1			BOLT

MODEL CODES

16=Cherokee 2 Dr.(1981-83)	78=Cherokee 4WD-4 Dr.(1984-86)	64=Comanche 2WD-6 Ft. Box(1986)	25=J-10 Truck 7 Ft. Box(1981-84)
17=Cherokee 2 Dr.(1981-83)	85=CJ-5 (1981-83)	66=Comanche 2WD-7 Ft. Box(1986)	26=J10 Truck 8 Ft. Box(1981-86)
73=Cherokee 2WD-2 Dr.(1984-86)	86=CJ-6(1981)	63=Comanche 4WD-6 Ft. Box(1986)	27=J-20 Truck 8 Ft. Box(1981-86)
74=Cherokee 2WD-4 Dr.(1984-86)	87=CJ-7(1981-86)	65=Comanche 4WD-7 Ft. Box(1986)	15=Wagoneer 4 Dr.(1981-83)
18=Cherokee 4 Dr.(1981-83)	88=CJ-8, Scrambler(1981-86)	15=Grand Wagoneer 4 Dr.(1984-86)	75=Wagoneer 4WD-4 Dr.(1984-86)
77=Cherokee 4WD-2 Dr.(1984-86)			

BODY
CJ=CJ-5, CJ-6, CJ-7, CJ-8, Scrambler(1981-86)
MJ=Comanche Pickup(1986)

STYLES
SJ=Wagoneer(1981-83), Grand Wagoneer(1984-86), Cherokee(1981-83), J-10, J-20(1981-86)
XJ=Wagoneer(1984-86), Cherokee(1984-86)

AR = Use as Required - = Non Illustrated Part P.A.R. = Paint as Required

« RETURN TO GROUP INDEX

TAILGATE, LATCHES AND HINGES COMANCHE
Figure 23A-4900

81J69 4900

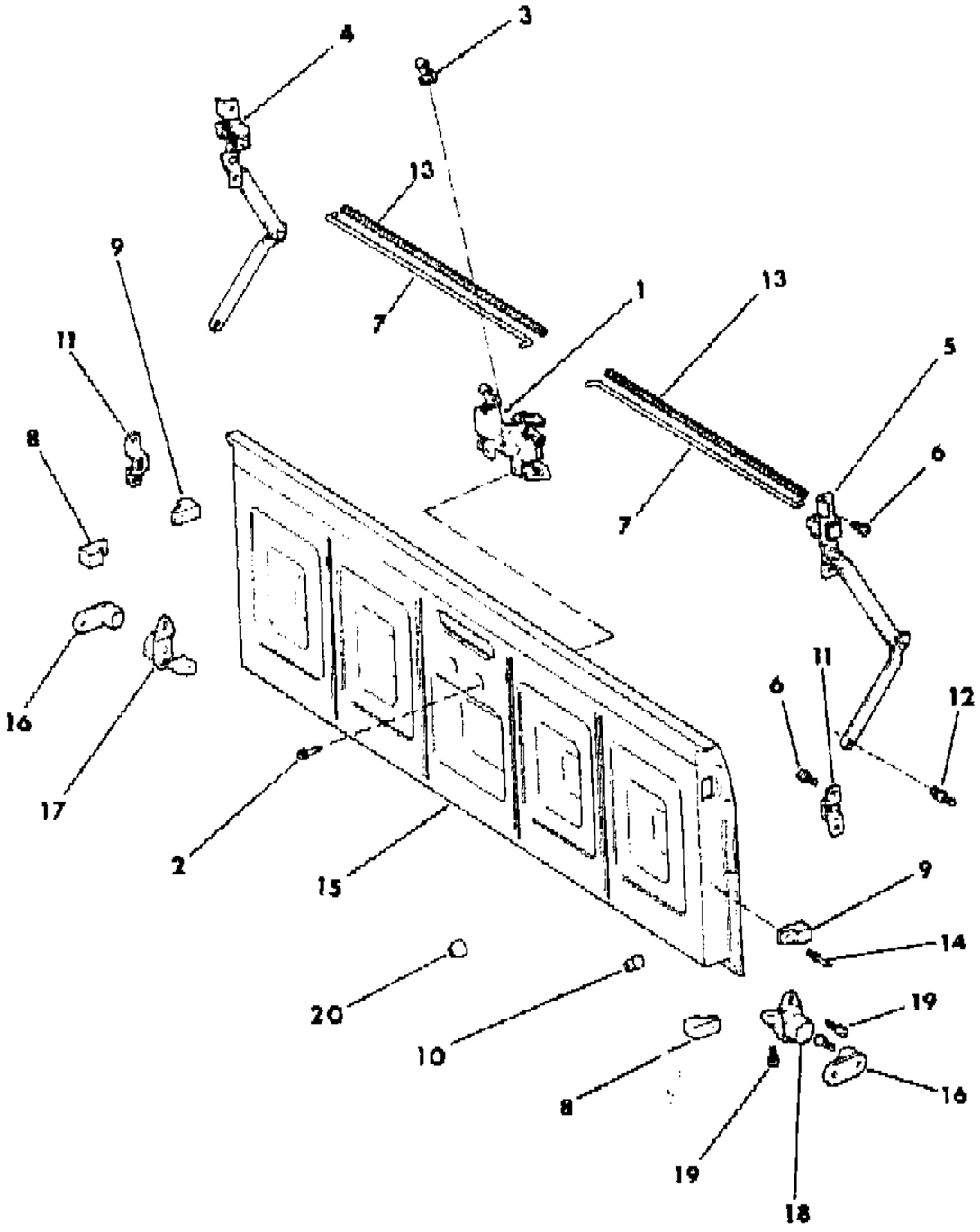

ITEM	PART NUMBER	QTY	BODY	MODEL	DESCRIPTION
1	5500 4890	1			HANDLE, Tailgate
2	3420 1886	3			SCREW
3	J400 4532	2			CLIP
4	5500 4886	1			LATCH, With Linkage
5	5500 4887	1			LATCH, With Linkage
6	3420 1655	6			SCREW
7	5500 4889	2			ROD, Latch Release
8	5500 4883	2			BUMPER, Body Half
9	5500 4888	2			BUMPER, Tailgate Half
10	5500 4885	4			BUMPER, Tailgate Latch
11	5500 4892	2			STRIKER, Latch
12	3420 2113	2			SCREW
13	J372 1174	2			SLEEVE, 27"
14	3420 1980	4			RIVET
15	5700 0890	1			TAILGATE, Pickup Box
16	5500 4884	2			HINGE, Tailgate
17	5500 4318	1			HINGE, Tailgate
18	5500 4319	1			HINGE, Tailgate
19	3420 1596	8			BOLT
20	J400 0282	2			BUMPER

MODEL CODES

16=Cherokee 2 Dr.(1981-83)
17=Cherokee 2 Dr.(1981-83)
73=Cherokee 2WD-2 Dr.(1984-86)
74=Cherokee 2WD-4 Dr.(1984-86)
18=Cherokee 4 Dr.(1981-83)
77=Cherokee 4WD-2 Dr.(1984-86)
78=Cherokee 4WD-4 Dr.(1984-86)
85=CJ-5 (1981-83)
86=CJ-6(1981)
87=CJ-7(1981-86)
88=CJ-8, Scrambler(1981-86)
64=Comanche 2WD-6 Ft. Box(1986)
66=Comanche 2WD-7 Ft. Box(1986)
63=Comanche 4WD-6 Ft. Box(1986)
65=Comanche 4WD-7 Ft. Box(1986)
15=Grand Wagoneer 4 Dr.(1984-86)
25=J-10 Truck 7 Ft. Box(1981-84)
26=J10 Truck 8 Ft. Box(1981-86)
27=J-20 Truck 8 Ft. Box(1981-86)
15=Wagoneer 4 Dr.(1981-83)
75=Wagoneer 4WD-4 Dr.(1984-86)

BODY
CJ=CJ-5, CJ-6, CJ-7, CJ-8, Scrambler(1981-86)
MJ=Comanche Pickup(1986)

STYLES
SJ=Wagoneer(1981-83), Grand Wagoneer(1984-86), Cherokee(1981-83), J-10, J-20(1981-86)
XJ=Wagoneer(1984-86), Cherokee(1984-86)

AR = Use as Required - = Non Illustrated Part P.A.R. = Paint as Required

« RETURN TO GROUP INDEX

BOX, PICKUP COMANCHE
Figure 23A-5000

81J69 5000

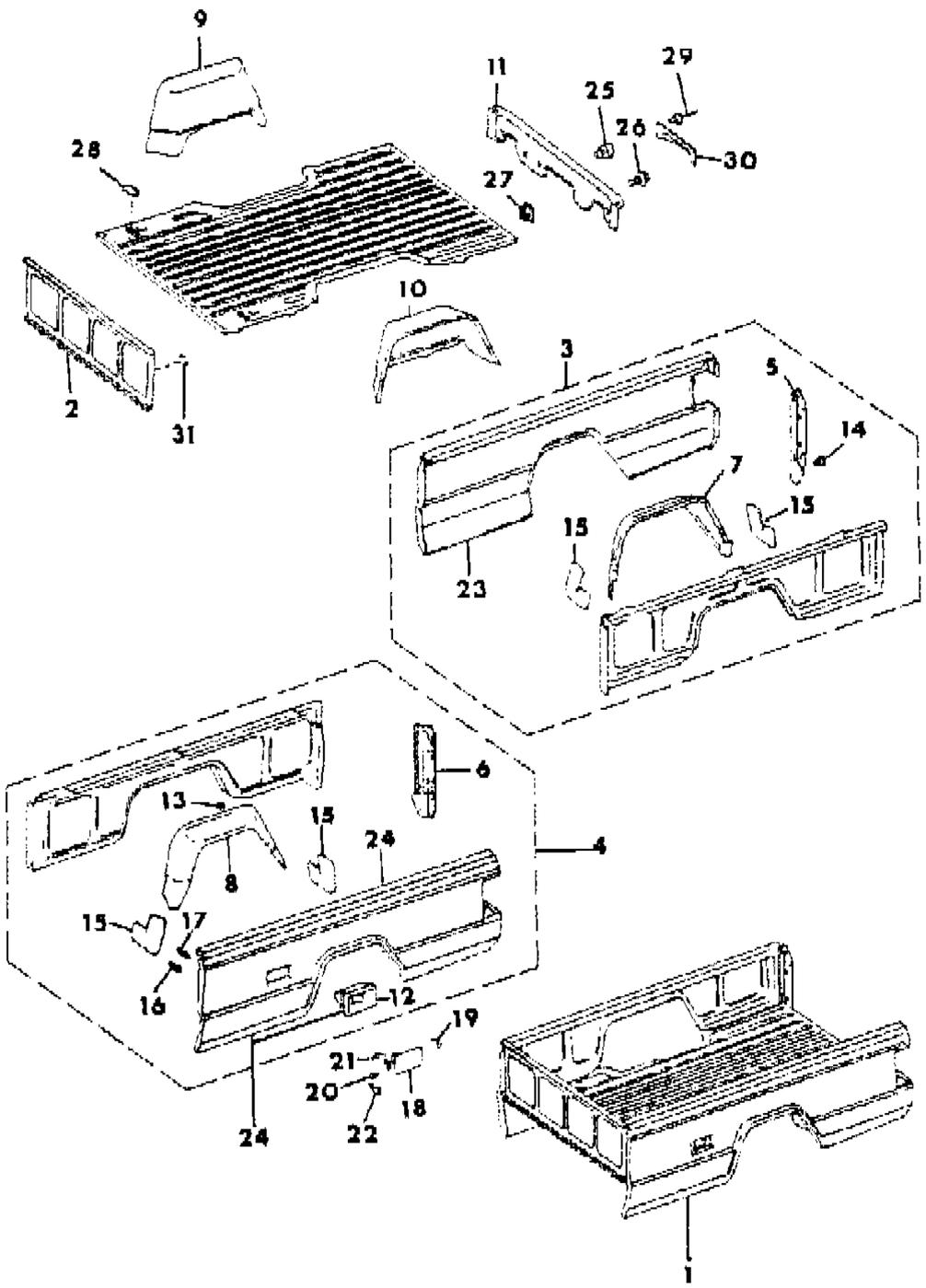

ITEM	PART NUMBER	QTY	BODY	MODEL	DESCRIPTION
1					BOX, Pickup ***
	5700 0922	1			With 7ft. Pickup Box
	5700 1987	1			With 6ft. Pickup Box
2	5700 0880	1			PANEL, Pickup Box Front
3					PANEL, Pickup Box Side
	5700 0884	1			With 7ft. Pickup Box
	5700 1992	1			With 6ft. Pickup Box
4					PANEL, Pickup Box Side
	5700 0885	1			With 7ft. Pickup Box
	5700 1993	1			With 6ft. Pickup Box
5	5700 0876	1			PILLAR, Pickup Box Rear
6	5700 0877	1			PILLAR, Pickup Box Rear
7	5500 4042	1			FENDER, Pickup Box
8	5500 4043	1			FENDER, Pickup Box
9	5500 4040	1			PANEL, Wheelhouse Rear
10	5500 4041	1			PANEL, Wheelhouse Rear
11					CROSSMEMBER, Rear
	5700 0872	1			With 7ft. Pickup Box
	5700 1991	1			With 6ft. Pickup Box
12	5500 8888	1			HOUSING, Fuel Filler
13	5500 6578	2			PLUG, Drain
14	J400 4919	2			FASTENER
15	5500 6178	4			GUARD, Splash
16	3420 1984	18			SCREW
17	3420 1631	2			RIVET
18	5500 0819	1			DOOR, Fuel Filler
19	3420 1812	1			BUMPER, Door
20	J063 5787	1			BUMPER, Door
21	5500 4206	1			SPRING, Door
22	3420 2399	2			SCREW
23					PANEL, Side
	5500 3542	1			With 7ft. Pickup Box
	5500 9136	1			With 6ft. Pickup Box
24					PANEL, Side
	5700 0875	1			With 7ft. Pickup Box
	5700 1999	1			With 6ft. Pickup Box
25	3420 1202	2			BUMPER
26	3420 2091	2			SCREW
27	3420 1263	2			NUT

MODEL CODES

16=Cherokee 2 Dr.(1981-83)
17=Cherokee 2 Dr.(1981-83)
73=Cherokee 2WD-2 Dr.(1984-86)
74=Cherokee 2WD-4 Dr.(1984-86)
18=Cherokee 4 Dr.(1981-83)
77=Cherokee 4WD-2 Dr.(1984-86)
78=Cherokee 4WD-4 Dr.(1984-86)
85=CJ-5 (1981-83)
86=CJ-6(1981)
87=CJ-7(1981-86)
88=CJ-8, Scrambler(1981-86)
64=Comanche 2WD-6 Ft. Box(1986)
66=Comanche 2WD-7 Ft. Box(1986)
63=Comanche 4WD-6 Ft. Box(1986)
65=Comanche 4WD-7 Ft. Box(1986)
15=Grand Wagoneer 4 Dr.(1984-86)
25=J-10 Truck 7 Ft. Box(1981-84)
26=J10 Truck 8 Ft. Box(1981-86)
27=J-20 Truck 8 Ft. Box(1981-86)
15=Wagoneer 4 Dr.(1981-83)
75=Wagoneer 4WD-4 Dr.(1984-86)

BODY
CJ=CJ-5, CJ-6, CJ-7, CJ-8, Scrambler(1981-86)
MJ=Comanche Pickup(1986)

STYLES
SJ=Wagoneer(1981-83), Grand Wagoneer(1984-86), Cherokee(1981-83), J-10, J-20(1981-86)
XJ=Wagoneer(1984-86), Cherokee(1984-86)

AR = Use as Required - = Non Illustrated Part P.A.R. = Paint as Required

« RETURN TO GROUP INDEX »

BOX, PICKUP COMANCHE
Figure 23A-5000

81J69 5000

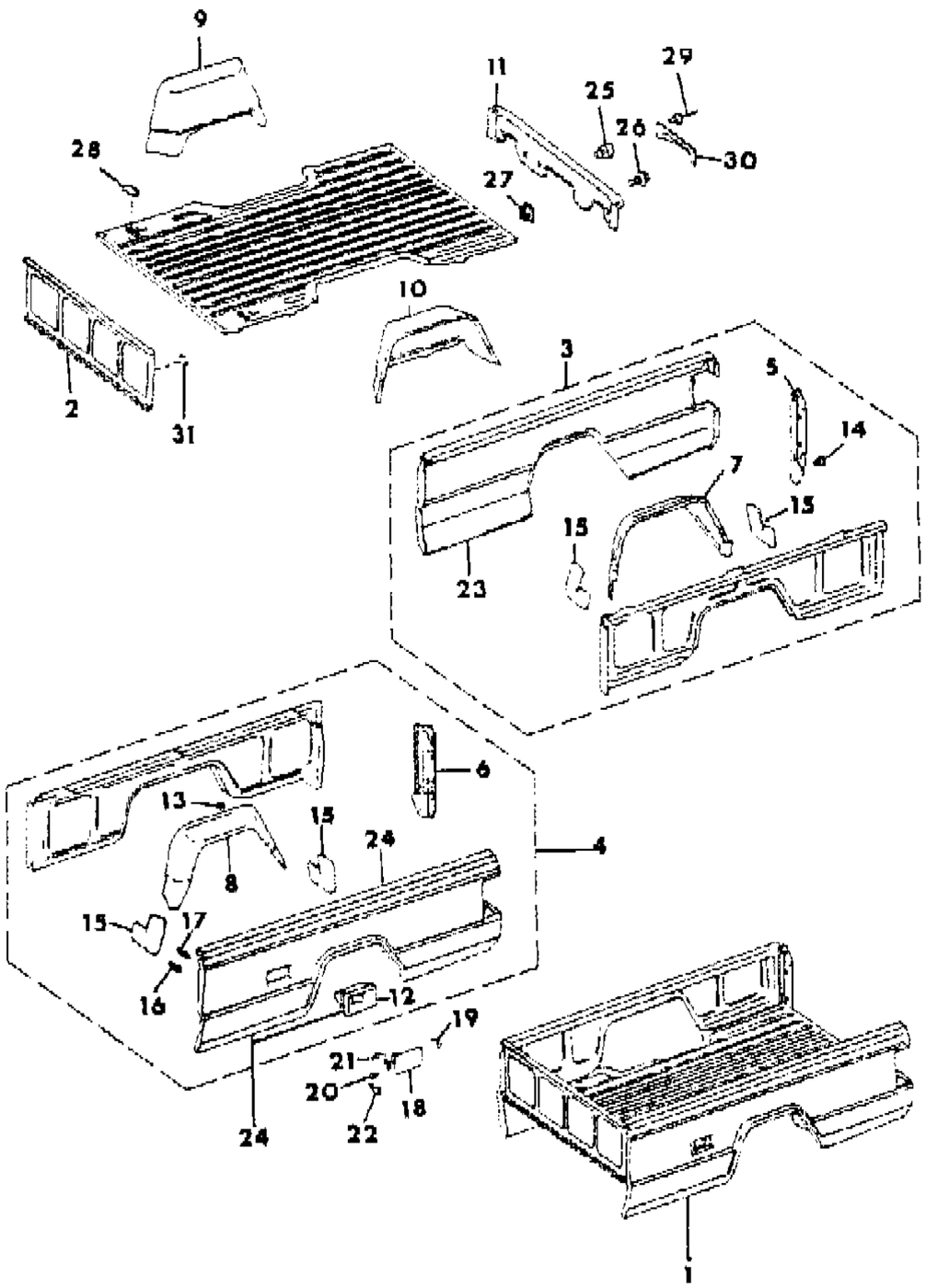

ITEM	PART NUMBER	QTY	BODY	MODEL	DESCRIPTION
28	5500 9399	2			PLUG
29	3420 1208	5			RIVET
30	5500 9144	1			COVER
31	3420 1409	2			PLUG

MODEL CODES

16=Cherokee 2 Dr.(1981-83)
17=Cherokee 2 Dr.(1981-83)
73=Cherokee 2WD-2 Dr.(1984-86)
74=Cherokee 2WD-4 Dr.(1984-86)
18=Cherokee 4 Dr.(1981-83)
77=Cherokee 4WD-2 Dr.(1984-86)
78=Cherokee 4WD-4 Dr.(1984-86)
85=CJ-5 (1981-83)
86=CJ-6(1981)
87=CJ-7(1981-86)
88=CJ-8, Scrambler(1981-86)
64=Comanche 2WD-6 Ft. Box(1986)
66=Comanche 2WD-7 Ft. Box(1986)
63=Comanche 4WD-6 Ft. Box(1986)
65=Comanche 4WD-7 Ft. Box(1986)
15=Grand Wagoneer 4 Dr.(1984-86)
25=J-10 Truck 7 Ft. Box(1981-84)
26=J10 Truck 8 Ft. Box(1981-86)
27=J-20 Truck 8 Ft. Box(1981-86)
15=Wagoneer 4 Dr.(1981-83)
75=Wagoneer 4WD-4 Dr.(1984-86)

BODY
CJ=CJ-5, CJ-6, CJ-7, CJ-8, Scrambler(1981-86)
MJ=Comanche Pickup(1986)

STYLES
SJ=Wagoneer(1981-83), Grand Wagoneer(1984-86), Cherokee(1981-83), J-10, J-20(1981-86)
XJ=Wagoneer(1984-86), Cherokee(1984-86)

AR = Use as Required - = Non Illustrated Part P.A.R. = Paint as Required

« RETURN TO GROUP INDEX

LIFTDOOR, LATCH AND HINGES XJ CHEROKEE, XJ WAGONEER
Figure 23A-5100

81J69 5100

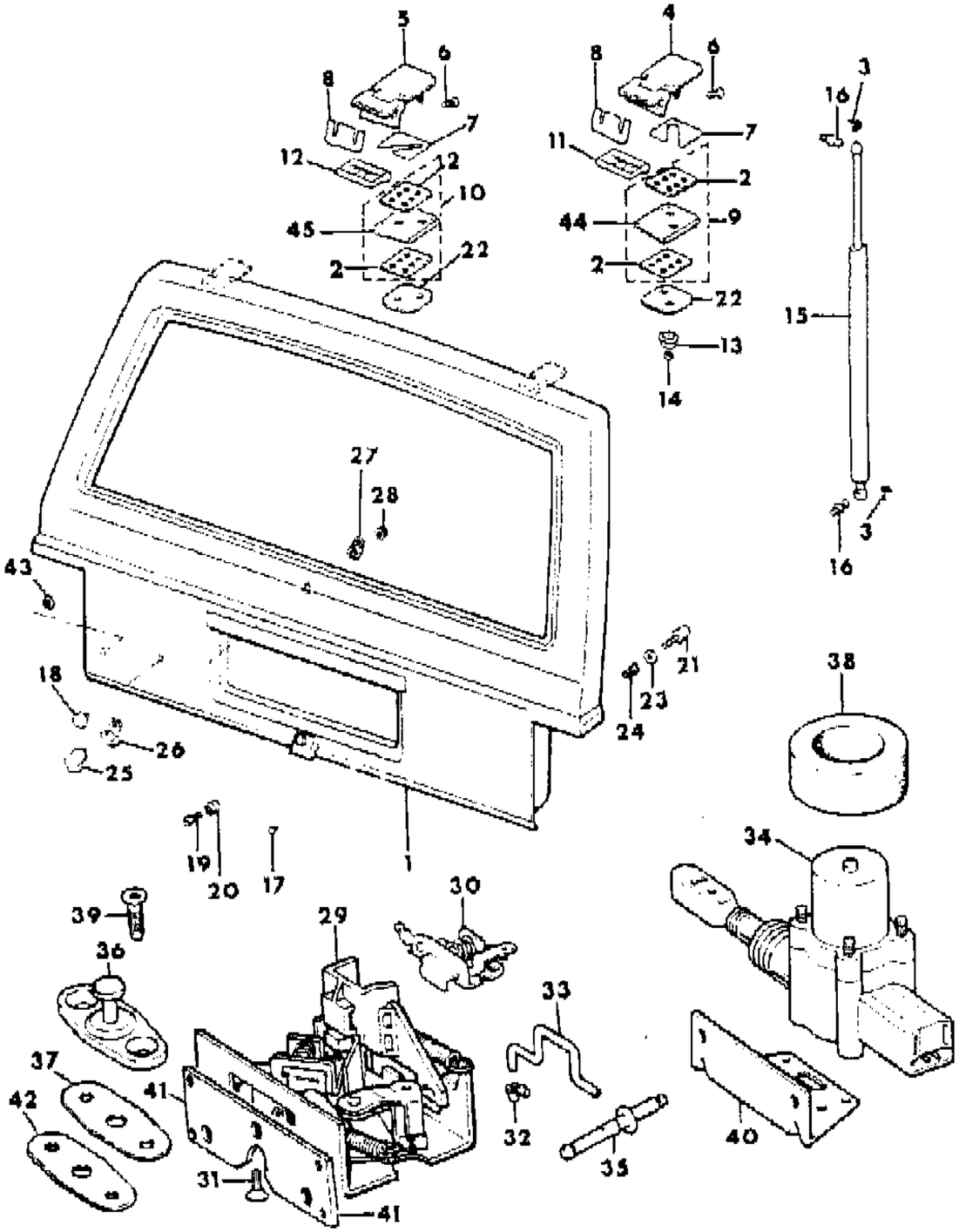

ITEM	PART NUMBER	QTY	BODY	MODEL	DESCRIPTION
1					LIFT DOOR ***
	5500 1025	1			1984-85
	5500 9255	1			1986
2	5500 9756	4			SEAL, Hinge
3	J367 9830	4			CLIP
4-5	5500 1984-5	1			HINGE, Lift Door
6	3420 1925	4			SCREW
7	5500 0431	2			SHIM
8	5500 0432	2			SHIM
9-10	5501 0056-7	1			GASKET, Hinge
11-12	5500 1992-3	1			GASKET, Hinge
13	5500 1994	4			WASHER, Hinge
14	3420 1246	4			NUT
15	5500 0630	2			SUPPORT, Lift Door
16	5500 1430	4			STUD, Ball
17	J400 4227	2			BUMPER, License
18	J323 4895	2			BUMPER, License
19	3420 1287	2			SCREW
20	3420 1672	2			NUT
21	5500 5608	2			STOP, Lift Door
22	5500 6492	2			SHIM
23	5500 6770	2			SHIM
24	3420 1977	2			NUT
25	5500 6292	1			PLUG
26	5500 6293	1			GASKET
27	5500 6294	1			SPACER
28	1150 2507	1			NUT
29					LATCH, Lift Door
	5500 0632	1			Without Cargo Lamp
	5500 2370	1			With Cargo Lamp
30	5600 0479	1			SWITCH, Cargo Lamp
31	3420 1996	3			SCREW
32	J400 4532	1			CLIP, With Bushing
33	5500 0730	1			ROD, Lock Actuator
34	J813 4627	1			ACTUATOR, Power Lock
35	3420 1353	2			RIVET
36	5500 2748	1			STRIKER, Latch
37	5500 2756	AR			SHIM
38	5600 1242	1			INSULATOR

MODEL CODES
16=Cherokee 2 Dr.(1981-83)
17=Cherokee 2 Dr.(1981-83)
73=Cherokee 2WD-2 Dr.(1984-86)
74=Cherokee 2WD-4 Dr.(1984-86)
18=Cherokee 4 Dr.(1981-83)
77=Cherokee 4WD-2 Dr.(1984-86)
78=Cherokee 4WD-4 Dr.(1984-86)
85=CJ-5 (1981-83)
86=CJ-6(1981)
87=CJ-7(1981-86)
88=CJ-8, Scrambler(1981-86)
64=Comanche 2WD-6 Ft. Box(1986)
66=Comanche 2WD-7 Ft. Box(1986)
63=Comanche 4WD-6 Ft. Box(1986)
65=Comanche 4WD-7 Ft. Box(1986)
15=Grand Wagoneer 4 Dr.(1984-86)
25=J-10 Truck 7 Ft. Box(1981-84)
26=J10 Truck 8 Ft. Box(1981-86)
27=J-20 Truck 8 Ft. Box(1981-86)
15=Wagoneer 4 Dr.(1981-83)
75=Wagoneer 4WD-4 Dr.(1984-86)

BODY
CJ=CJ-5, CJ-6, CJ-7, CJ-8, Scrambler(1981-86)
MJ=Comanche Pickup(1986)

STYLES
SJ=Wagoneer(1981-83), Grand Wagoneer(1984-86), Cherokee(1981-83), J-10, J-20(1981-86)
XJ=Wagoneer(1984-86), Cherokee(1984-86)

AR = Use as Required - = Non Illustrated Part P.A.R. = Paint as Required

« RETURN TO GROUP INDEX »

LIFTDOOR, LATCH AND HINGES XJ CHEROKEE, XJ WAGONEER
Figure 23A-5100

81J69 5100

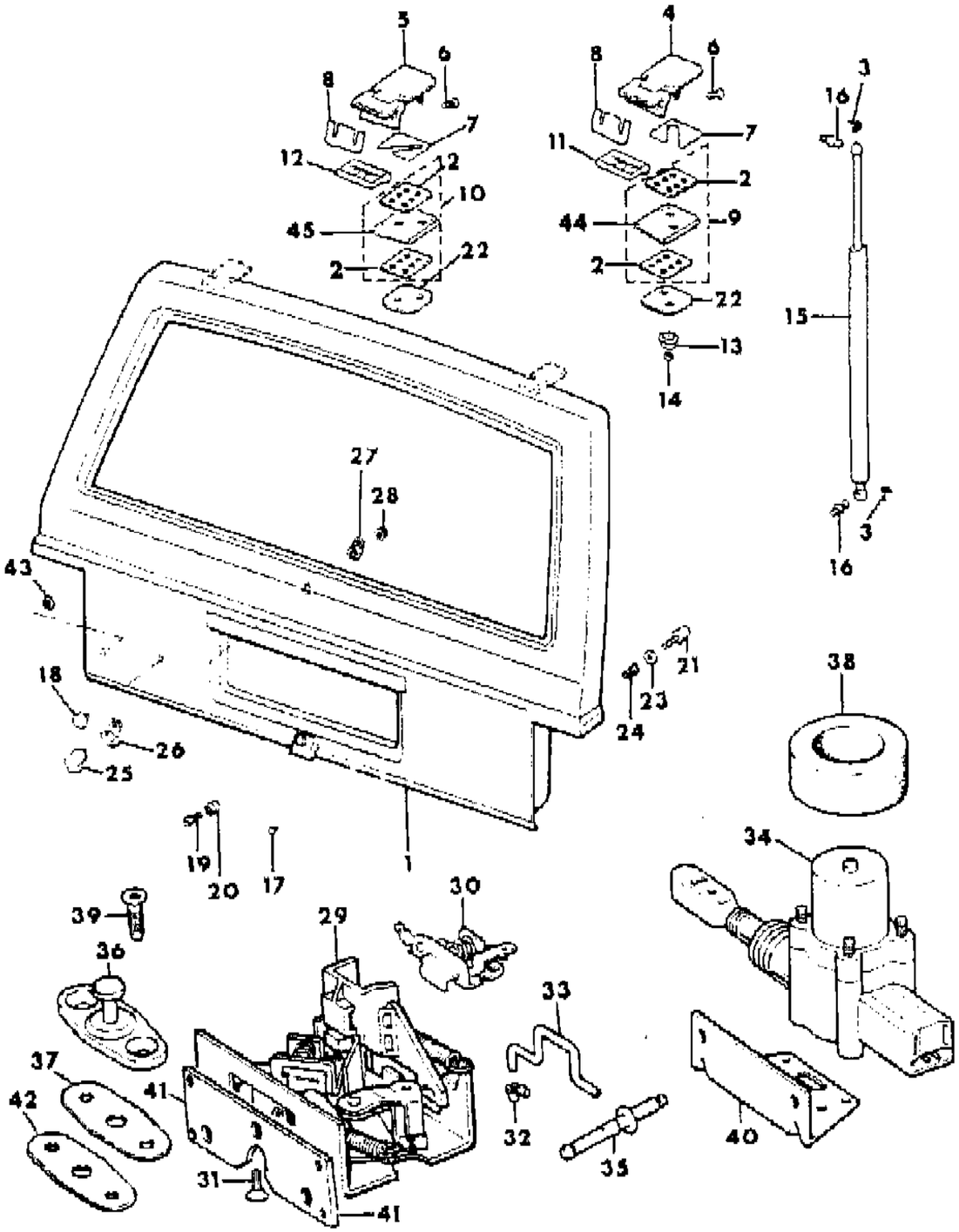

ITEM	PART NUMBER	QTY	BODY	MODEL	DESCRIPTION
39	3420 1516	2			SCREW
40	J371 9474	1			BRACKET, Actuator
41	5501 5398	1			PLATE, Lift Door Latch
42	5500 2757	AR			SPACER
43	3420 1531	1			PLUG
44-45	5500 1990-1	1			GASKET, Hinge

MODEL CODES

16=Cherokee 2 Dr.(1981-83)
17=Cherokee 2 Dr.(1981-83)
73=Cherokee 2WD-2 Dr.(1984-86)
74=Cherokee 2WD-4 Dr.(1984-86)
18=Cherokee 4 Dr.(1981-83)
77=Cherokee 4WD-2 Dr.(1984-86)
78=Cherokee 4WD-4 Dr.(1984-86)
85=CJ-5 (1981-83)
86=CJ-6(1981)
87=CJ-7(1981-86)
88=CJ-8, Scrambler(1981-86)
64=Comanche 2WD-6 Ft. Box(1986)
66=Comanche 2WD-7 Ft. Box(1986)
63=Comanche 4WD-6 Ft. Box(1986)
65=Comanche 4WD-7 Ft. Box(1986)
15=Grand Wagoneer 4 Dr.(1984-86)
25=J-10 Truck 7 Ft. Box(1981-84)
26=J10 Truck 8 Ft. Box(1981-86)
27=J-20 Truck 8 Ft. Box(1981-86)
15=Wagoneer 4 Dr.(1981-83)
75=Wagoneer 4WD-4 Dr.(1984-86)

BODY
CJ=CJ-5, CJ-6, CJ-7, CJ-8, Scrambler(1981-86)
MJ=Comanche Pickup(1986)

STYLES
SJ=Wagoneer(1981-83), Grand Wagoneer(1984-86), Cherokee(1981-83), J-10, J-20(1981-86)
XJ=Wagoneer(1984-86), Cherokee(1984-86)

AR = Use as Required - = Non Illustrated Part P.A.R. = Paint as Required

« RETURN TO GROUP INDEX

SPORT BAR COMANCHE
Figure 23A-5200

81J69 5200

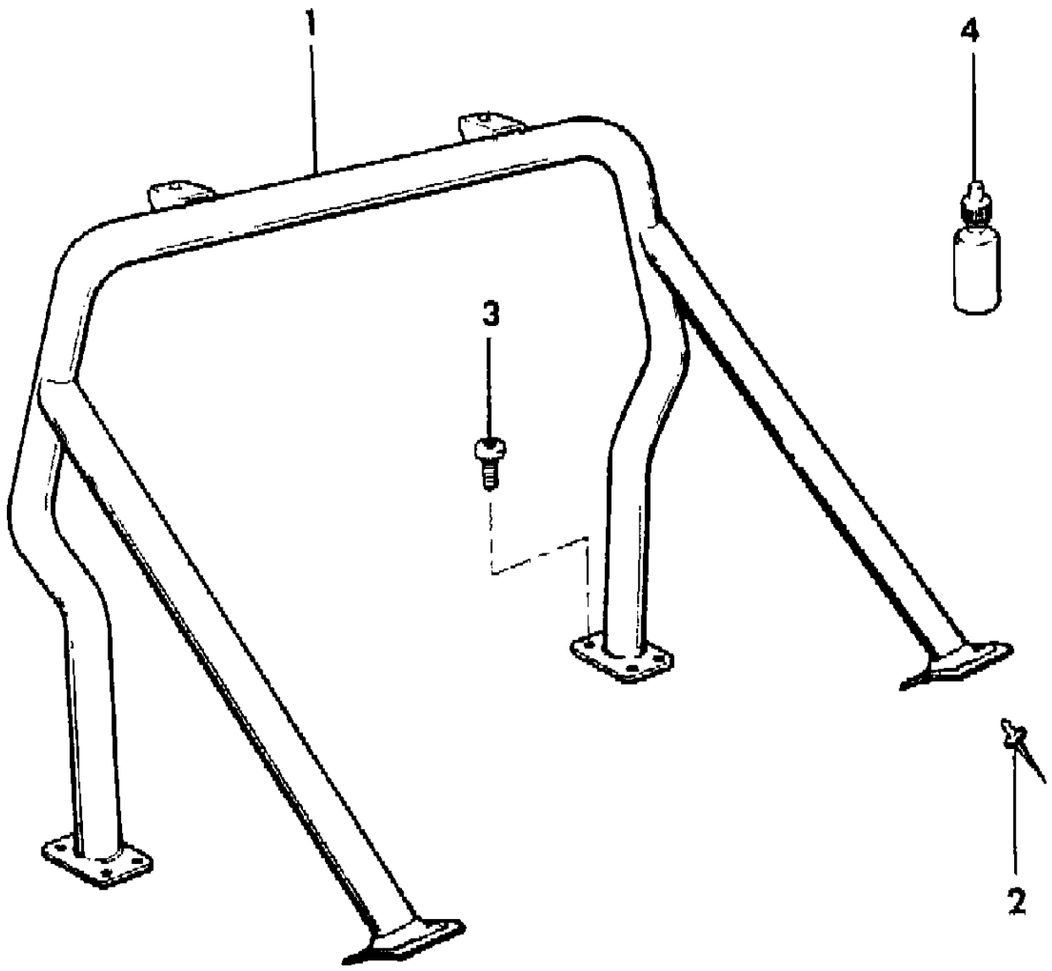

ITEM	PART NUMBER	QTY	BODY	MODEL	DESCRIPTION
1					SPORT BAR ***
	8220 0359	1			With 7ft. Pickup Box
	8220 0522	1			With 6ft. Pickup Box
2	3420 1208	4			RIVET
3	3420 2158	26			BOLT
4	J812 9800	1			SEALER, Bolt

MODEL CODES

16=Cherokee 2 Dr.(1981-83)
17=Cherokee 2 Dr.(1981-83)
73=Cherokee 2WD-2 Dr.(1984-86)
74=Cherokee 2WD-4 Dr.(1984-86)
18=Cherokee 4 Dr.(1981-83)
77=Cherokee 4WD-2 Dr.(1984-86)
78=Cherokee 4WD-4 Dr.(1984-86)
85=CJ-5 (1981-83)
86=CJ-6(1981)
87=CJ-7(1981-86)
88=CJ-8, Scrambler(1981-86)
64=Comanche 2WD-6 Ft. Box(1986)
66=Comanche 2WD-7 Ft. Box(1986)
63=Comanche 4WD-6 Ft. Box(1986)
65=Comanche 4WD-7 Ft. Box(1986)
15=Grand Wagoneer 4 Dr.(1984-86)
25=J-10 Truck 7 Ft. Box(1981-84)
26=J10 Truck 8 Ft. Box(1981-86)
27=J-20 Truck 8 Ft. Box(1981-86)
15=Wagoneer 4 Dr.(1981-83)
75=Wagoneer 4WD-4 Dr.(1984-86)

BODY
CJ=CJ-5, CJ-6, CJ-7, CJ-8, Scrambler(1981-86)
MJ=Comanche Pickup(1986)

STYLES
SJ=Wagoneer(1981-83), Grand Wagoneer(1984-86), Cherokee(1981-83), J-10, J-20(1981-86)
XJ=Wagoneer(1984-86), Cherokee(1984-86)

AR = Use as Required - = Non Illustrated Part P.A.R. = Paint as Required

« RETURN TO GROUP INDEX

RACK, ROOF LUGGAGE XJ CHEROKEE, XJ WAGONEER
Figure 23A-5300

81J69 5300

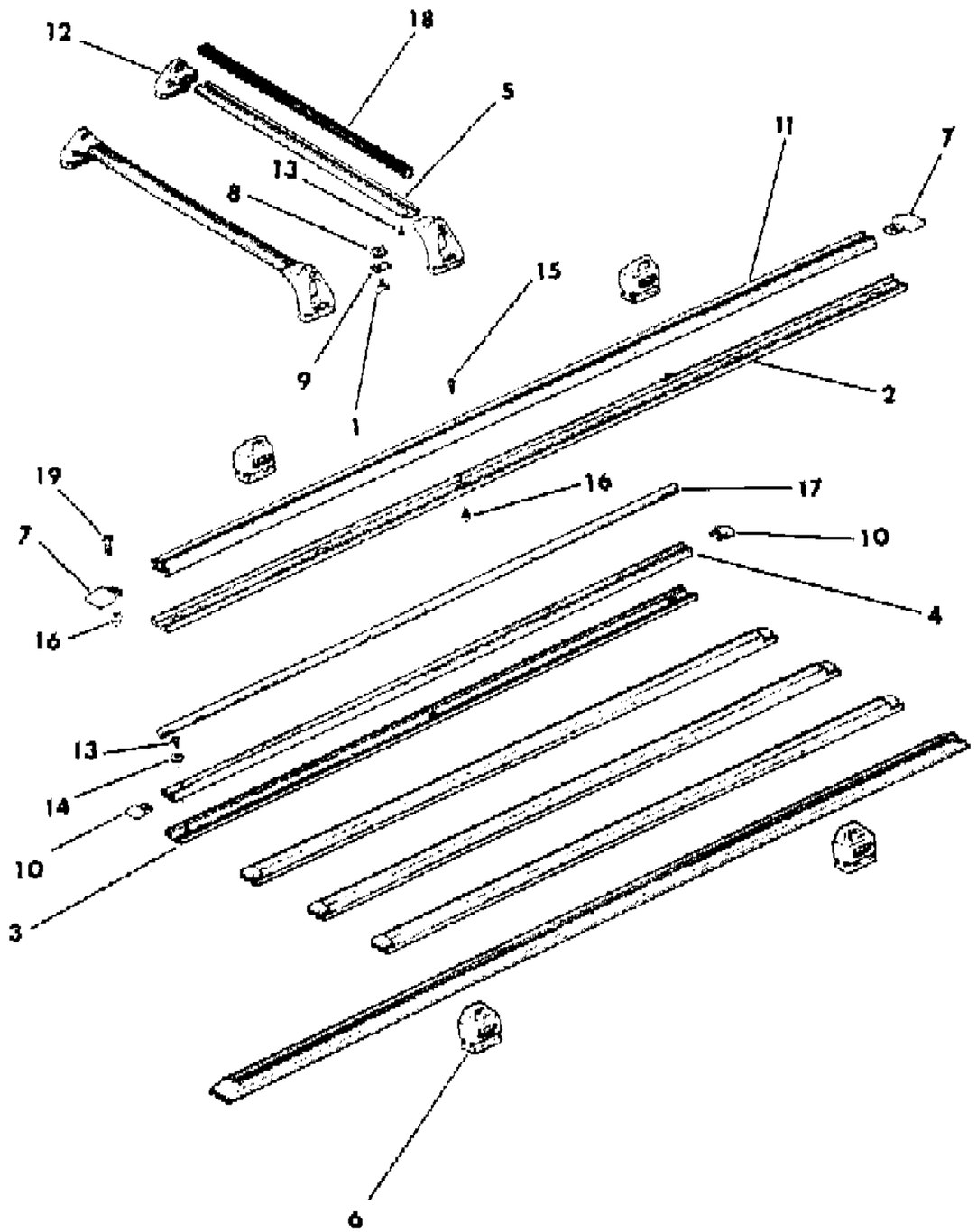

ITEM	PART NUMBER	QTY	BODY	MODEL	DESCRIPTION
1	J374 5222	4			KEY, Adjustment
2	5500 0222	2			PAD, Slide Rail
3	5500 0224	4			PAD, Skid Strip
4	5500 0216	4			STRIP, Skid
5	5500 0228	2			RAIL, Cross
6	5500 6284	4			SUPPORT, Tie Down
7	3500 1249	4			END, Slide Closed ***
8	3500 1250	4			WHEEL, Adjustment ***
9	3500 1251	4			LOCK, Adjustment Wheel
10	5500 2864	8			END, Skid Strip ***
11	5500 2866	2			RAIL, Slide
12	3500 1253	4			SUPPORT, Cross Rail
13	J374 5243	16			SCREW
14	J400 7015	12			WASHER
15	3420 1609	10			SCREW
16	3420 1672	12			NUT, Jack
17	5500 2865	4			INSERT, Skid Strip
18	5500 0229	2			INSERT, Cross Rail
19	3420 1627	2			SCREW

MODEL CODES

16=Cherokee 2 Dr.(1981-83)
17=Cherokee 2 Dr.(1981-83)
73=Cherokee 2WD-2 Dr.(1984-86)
74=Cherokee 2WD-4 Dr.(1984-86)
18=Cherokee 4 Dr.(1981-83)
77=Cherokee 4WD-2 Dr.(1984-86)
78=Cherokee 4WD-4 Dr.(1984-86)
85=CJ-5 (1981-83)
86=CJ-6(1981)
87=CJ-7(1981-86)
88=CJ-8, Scrambler(1981-86)
64=Comanche 2WD-6 Ft. Box(1986)
66=Comanche 2WD-7 Ft. Box(1986)
63=Comanche 4WD-6 Ft. Box(1986)
65=Comanche 4WD-7 Ft. Box(1986)
15=Grand Wagoneer 4 Dr.(1984-86)
25=J-10 Truck 7 Ft. Box(1981-84)
26=J10 Truck 8 Ft. Box(1981-86)
27=J-20 Truck 8 Ft. Box(1981-86)
15=Wagoneer 4 Dr.(1981-83)
75=Wagoneer 4WD-4 Dr.(1984-86)

BODY
CJ=CJ-5, CJ-6, CJ-7, CJ-8, Scrambler(1981-86)
MJ=Comanche Pickup(1986)

STYLES
SJ=Wagoneer(1981-83), Grand Wagoneer(1984-86), Cherokee(1981-83), J-10, J-20(1981-86)
XJ=Wagoneer(1984-86), Cherokee(1984-86)

AR = Use as Required - = Non Illustrated Part P.A.R. = Paint as Required

« RETURN TO GROUP INDEX

RACK, ROOF SPORTS DECK XJ CHEROKEE, XJ WAGONEER
Figure 23A-5400

81J69 5400

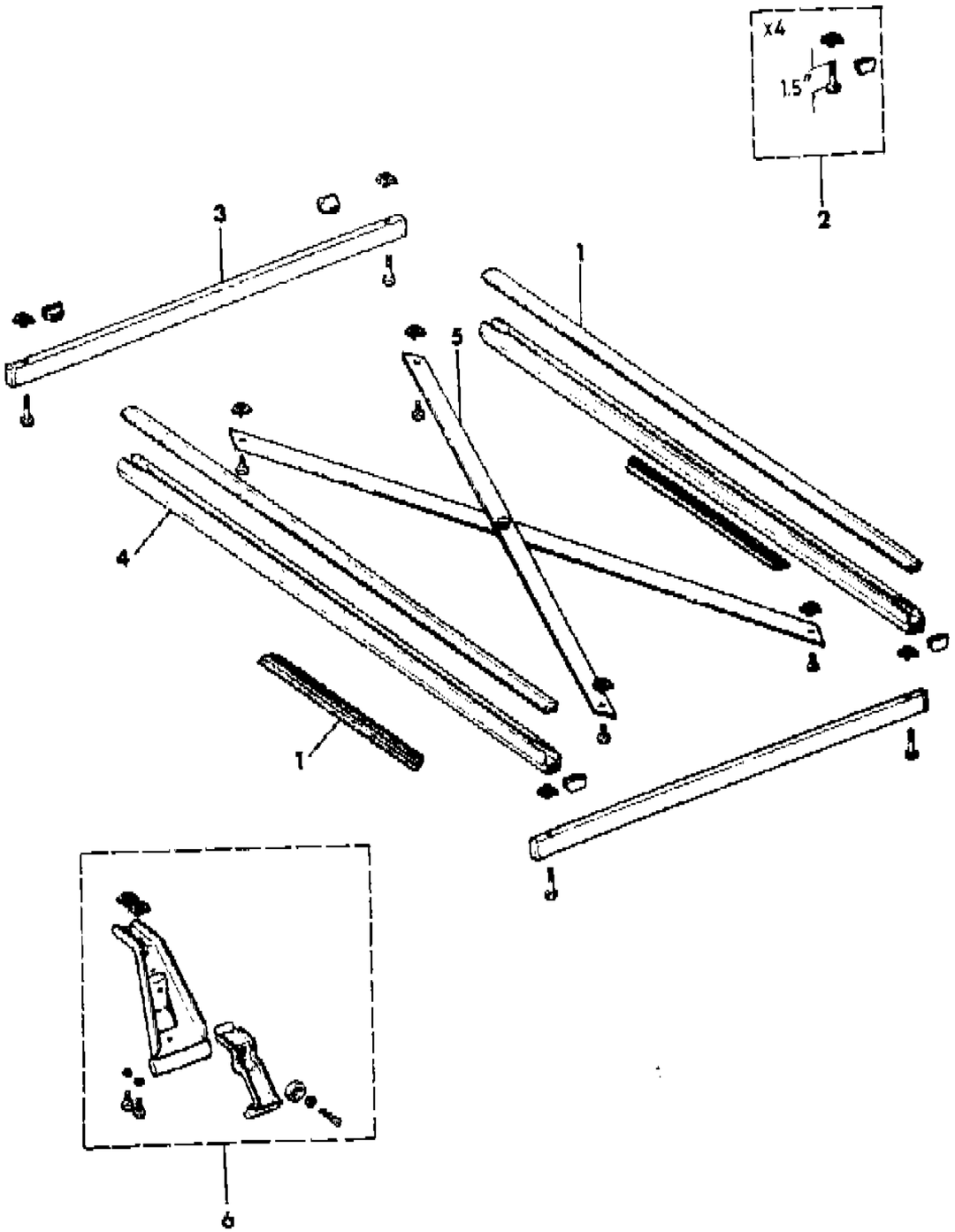

ITEM	PART NUMBER	QTY	BODY	MODEL	DESCRIPTION
1	8350 1120	4			INSERT, Slide Rail, Modification Required
2	8350 1119	1			HARDWARE PACKAGE
3	8350 1122	2			RAIL, Base
4	8350 1118	2			RAIL, Slide
5	8350 1121	1			BRACE
6	8350 1115	4			MOUNT, Roof Rack ***

MODEL CODES

16=Cherokee 2 Dr.(1981-83)
17=Cherokee 2 Dr.(1981-83)
73=Cherokee 2WD-2 Dr.(1984-86)
74=Cherokee 2WD-4 Dr.(1984-86)
18=Cherokee 4 Dr.(1981-83)
77=Cherokee 4WD-2 Dr.(1984-86)
78=Cherokee 4WD-4 Dr.(1984-86)
85=CJ-5 (1981-83)
86=CJ-6(1981)
87=CJ-7(1981-86)
88=CJ-8, Scrambler(1981-86)
64=Comanche 2WD-6 Ft. Box(1986)
66=Comanche 2WD-7 Ft. Box(1986)
63=Comanche 4WD-6 Ft. Box(1986)
65=Comanche 4WD-7 Ft. Box(1986)
15=Grand Wagoneer 4 Dr.(1984-86)
25=J-10 Truck 7 Ft. Box(1981-84)
26=J10 Truck 8 Ft. Box(1981-86)
27=J-20 Truck 8 Ft. Box(1981-86)
15=Wagoneer 4 Dr.(1981-83)
75=Wagoneer 4WD-4 Dr.(1984-86)

BODY
CJ=CJ-5, CJ-6, CJ-7, CJ-8, Scrambler(1981-86)
MJ=Comanche Pickup(1986)

STYLES
SJ=Wagoneer(1981-83), Grand Wagoneer(1984-86), Cherokee(1981-83), J-10, J-20(1981-86)
XJ=Wagoneer(1984-86), Cherokee(1984-86)

AR = Use as Required - = Non Illustrated Part P.A.R. = Paint as Required

« RETURN TO GROUP INDEX

SUNROOF, POP-UP XJ CHEROKEE, XJ WAGONEER
Figure 23A-5500

81J69 5500

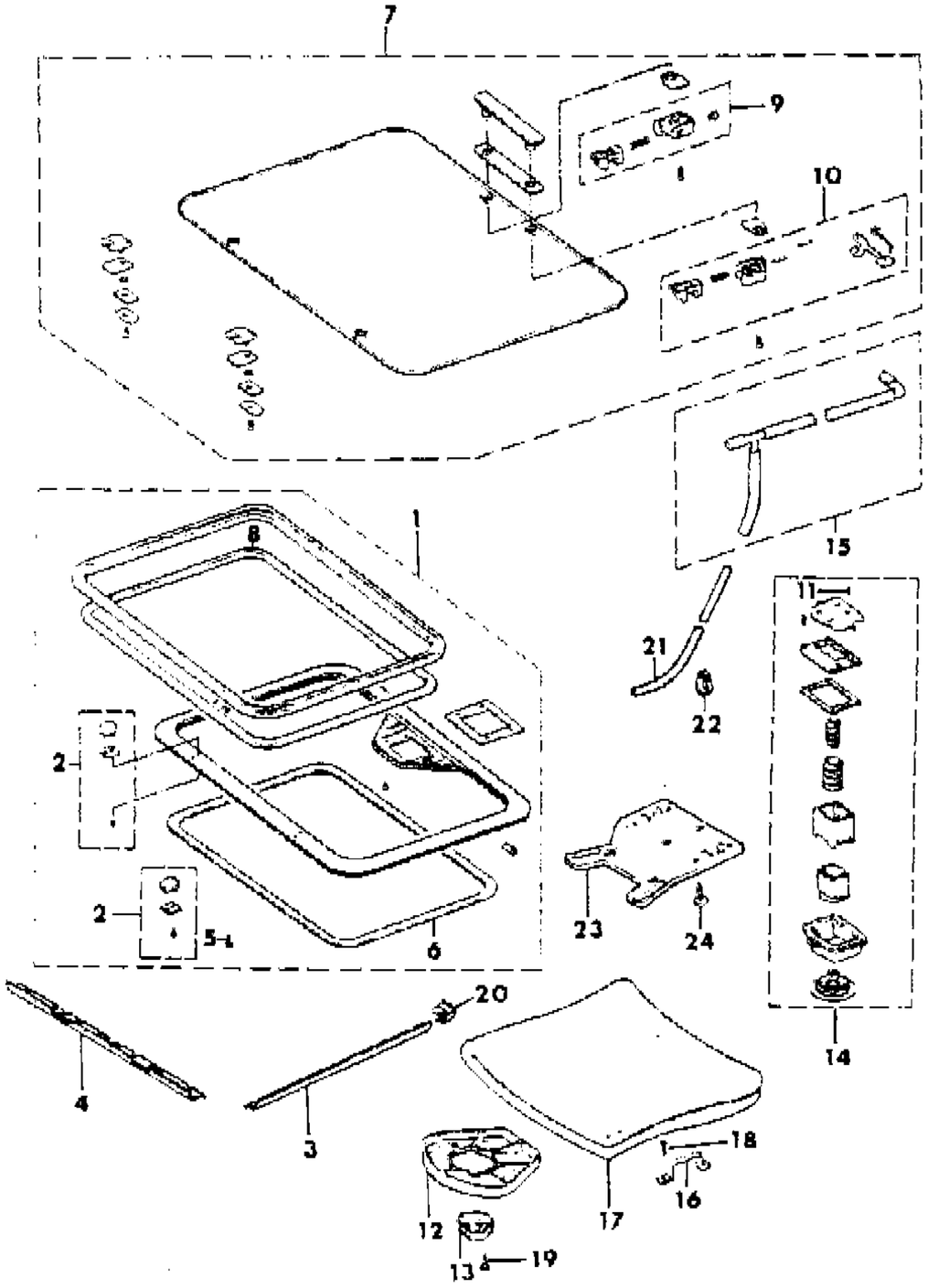

ITEM	PART NUMBER	QTY	BODY	MODEL	DESCRIPTION
1	8350 2073	1			FRAME PACKAGE, Sunroof ***
2	8350 1043	2			HINGE PACKAGE ***
3	8350 2075	2			RETAINER
4	8350 2076	2			RETAINER
5	8350 1046	30			SCREW
6	8350 1049	1			SEAL, Sunroof Flange
7	8350 2074	1			GLASS PACKAGE, Sunroof ***
8	8350 2078	1			SEAL, Sunroof Inner
9	8350 1054	1			LATCH PACKAGE
10	8350 1055	1			LATCH PACKAGE
11	8350 1060	8			SCREW
12	8350 1061	1			PLATE, Handle
13	8350 1062	1			HANDLE
14	8350 1063	1			ADJUSTER PACKAGE, Sunroof ***
15	5500 7626	2			TUBE PACKAGE, Drain ***
16	J545 5264	2			LOOP, Footman
17	5500 9582	1			COVER, Sunroof Glass
18	J400 2809	4			SCREW
19					SCREW
	3420 2098	1			1984-85
	3420 2491	1			1986
20	8350 2077	4			RETAINER
21	5500 7976	2			TUBE, Drain
22	J322 7850	2			CLAMP
23	5500 7632	1			REINFORCEMENT
24	3420 1893	4			SCREW

MODEL CODES

16=Cherokee 2 Dr.(1981-83)	78=Cherokee 4WD-4 Dr.(1984-86)	64=Comanche 2WD-6 Ft. Box(1986)	25=J-10 Truck 7 Ft. Box(1981-84)
17=Cherokee 2 Dr.(1981-83)	85=CJ-5 (1981-83)	66=Comanche 2WD-7 Ft. Box(1986)	26=J10 Truck 8 Ft. Box(1981-86)
73=Cherokee 2WD-2 Dr.(1984-86)	86=CJ-6(1981)	63=Comanche 4WD-6 Ft. Box(1986)	27=J-20 Truck 8 Ft. Box(1981-86)
74=Cherokee 2WD-4 Dr.(1984-86)	87=CJ-7(1981-86)	65=Comanche 4WD-7 Ft. Box(1986)	15=Wagoneer 4 Dr.(1981-83)
18=Cherokee 4 Dr.(1981-83)	88=CJ-8, Scrambler(1981-86)	15=Grand Wagoneer 4 Dr.(1984-86)	75=Wagoneer 4WD-4 Dr.(1984-86)
77=Cherokee 4WD-2 Dr.(1984-86)			

BODY
CJ=CJ-5, CJ-6, CJ-7, CJ-8, Scrambler(1981-86)
MJ=Comanche Pickup(1986)

STYLES
SJ=Wagoneer(1981-83), Grand Wagoneer(1984-86), Cherokee(1981-83), J-10, J-20(1981-86)
XJ=Wagoneer(1984-86), Cherokee(1984-86)

AR = Use as Required - = Non Illustrated Part P.A.R. = Paint as Required

« RETURN TO GROUP INDEX

PANELS, ROOF XJ CHEROKEE, XJ WAGONEER COMANCHE
Figure 23A-5600

81J69 5600

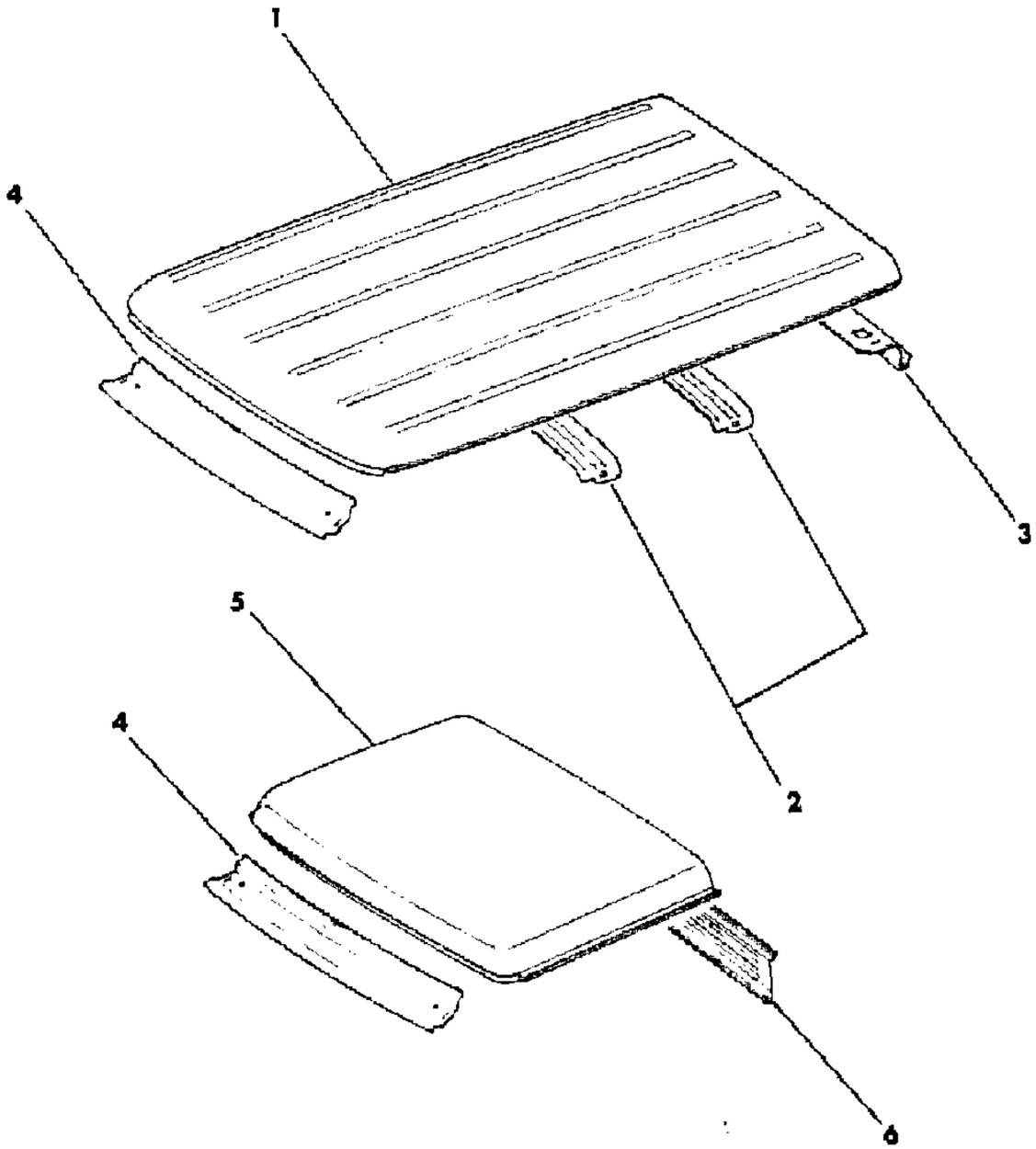

ITEM	PART NUMBER	QTY	BODY	MODEL	DESCRIPTION
1			XJ		PANEL, Roof
	5500 0142	1			Less Sunroof
	5501 0629	1			With Sunroof
2	5500 0138	2	XJ		SUPPORT, Roof
3	5700 0068	1	XJ		HEADER, Door ***
4	5500 0108	1			HEADER, Front ***
5	5500 3424	1	MJ		PANEL, Roof
6	5500 3432	1	MJ		PANEL, Cab Header

MODEL CODES

16=Cherokee 2 Dr.(1981-83)
17=Cherokee 2 Dr.(1981-83)
73=Cherokee 2WD-2 Dr.(1984-86)
74=Cherokee 2WD-4 Dr.(1984-86)
18=Cherokee 4 Dr.(1981-83)
77=Cherokee 4WD-2 Dr.(1984-86)
78=Cherokee 4WD-4 Dr.(1984-86)
85=CJ-5 (1981-83)
86=CJ-6(1981)
87=CJ-7(1981-86)
88=CJ-8, Scrambler(1981-86)
64=Comanche 2WD-6 Ft. Box(1986)
66=Comanche 2WD-7 Ft. Box(1986)
63=Comanche 4WD-6 Ft. Box(1986)
65=Comanche 4WD-7 Ft. Box(1986)
15=Grand Wagoneer 4 Dr.(1984-86)
25=J-10 Truck 7 Ft. Box(1981-84)
26=J10 Truck 8 Ft. Box(1981-86)
27=J-20 Truck 8 Ft. Box(1981-86)
15=Wagoneer 4 Dr.(1981-83)
75=Wagoneer 4WD-4 Dr.(1984-86)

BODY
CJ=CJ-5, CJ-6, CJ-7, CJ-8, Scrambler(1981-86)
MJ=Comanche Pickup(1986)

STYLES
SJ=Wagoneer(1981-83), Grand Wagoneer(1984-86), Cherokee(1981-83), J-10, J-20(1981-86)
XJ=Wagoneer(1984-86), Cherokee(1984-86)

AR = Use as Required - = Non Illustrated Part P.A.R. = Paint as Required

« RETURN TO GROUP INDEX

GLASS COMANCHE
Figure 23A-5700

81J69 5700

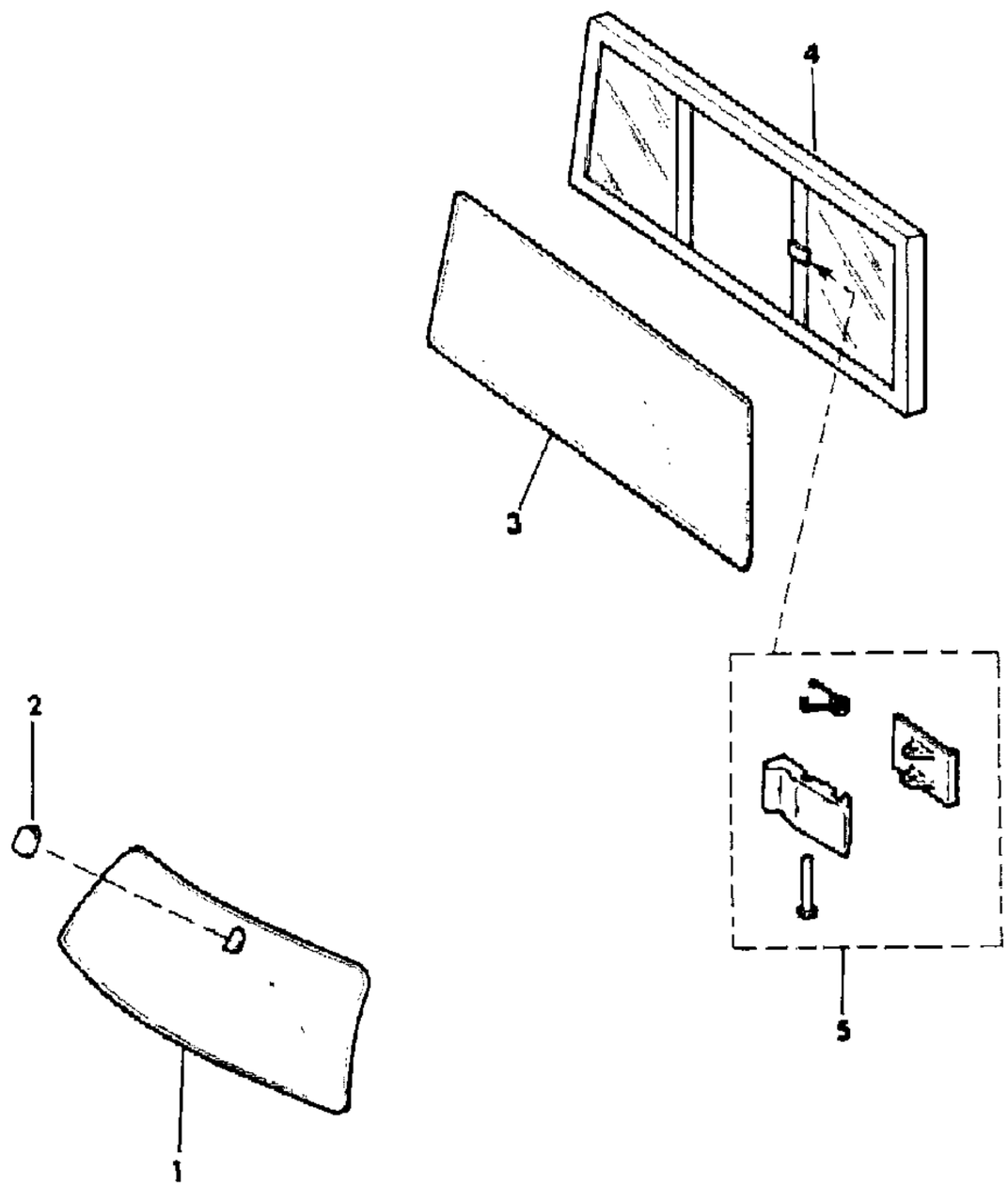

ITEM	PART NUMBER	QTY	BODY	MODEL	DESCRIPTION
1					GLASS, Windshield
	5500 0552	1			Clear
	5500 0553	1			Tinted
2	J365 7374	1			SUPPORT, Inside Rear View Mirror Mounting (A)
3	5500 4338	1			GLASS, Rear Window, Fixed, Tinted
4	5500 4224	1			GLASS, Rear Window, Sliding, Tinted
5	8350 3323	1			LOCK PACKAGE ***

(A) The Mirror Support is replacing Mirror Mounting Kit. When installing a Mirror Support, use Locktite #312 Adhesive and Acclerato for Locktite #312(c) End of decal is open

MODEL CODES

16=Cherokee 2 Dr.(1981-83)
17=Cherokee 2 Dr.(1981-83)
73=Cherokee 2WD-2 Dr.(1984-86)
74=Cherokee 2WD-4 Dr.(1984-86)
18=Cherokee 4 Dr.(1981-83)
77=Cherokee 4WD-2 Dr.(1984-86)
78=Cherokee 4WD-4 Dr.(1984-86)
85=CJ-5 (1981-83)
86=CJ-6(1981)
87=CJ-7(1981-86)
88=CJ-8, Scrambler(1981-86)
64=Comanche 2WD-6 Ft. Box(1986)
66=Comanche 2WD-7 Ft. Box(1986)
63=Comanche 4WD-6 Ft. Box(1986)
65=Comanche 4WD-7 Ft. Box(1986)
15=Grand Wagoneer 4 Dr.(1984-86)
25=J-10 Truck 7 Ft. Box(1981-84)
26=J10 Truck 8 Ft. Box(1981-86)
27=J-20 Truck 8 Ft. Box(1981-86)
15=Wagoneer 4 Dr.(1981-83)
75=Wagoneer 4WD-4 Dr.(1984-86)

BODY
CJ=CJ-5, CJ-6, CJ-7, CJ-8, Scrambler(1981-86)
MJ=Comanche Pickup(1986)

STYLES
SJ=Wagoneer(1981-83), Grand Wagoneer(1984-86), Cherokee(1981-83), J-10, J-20(1981-86)
XJ=Wagoneer(1984-86), Cherokee(1984-86)

AR = Use as Required - = Non Illustrated Part P.A.R. = Paint as Required

« RETURN TO GROUP INDEX

SEAL, WINDOW COMANCHE
Figure 23A-5800

81J69 5800

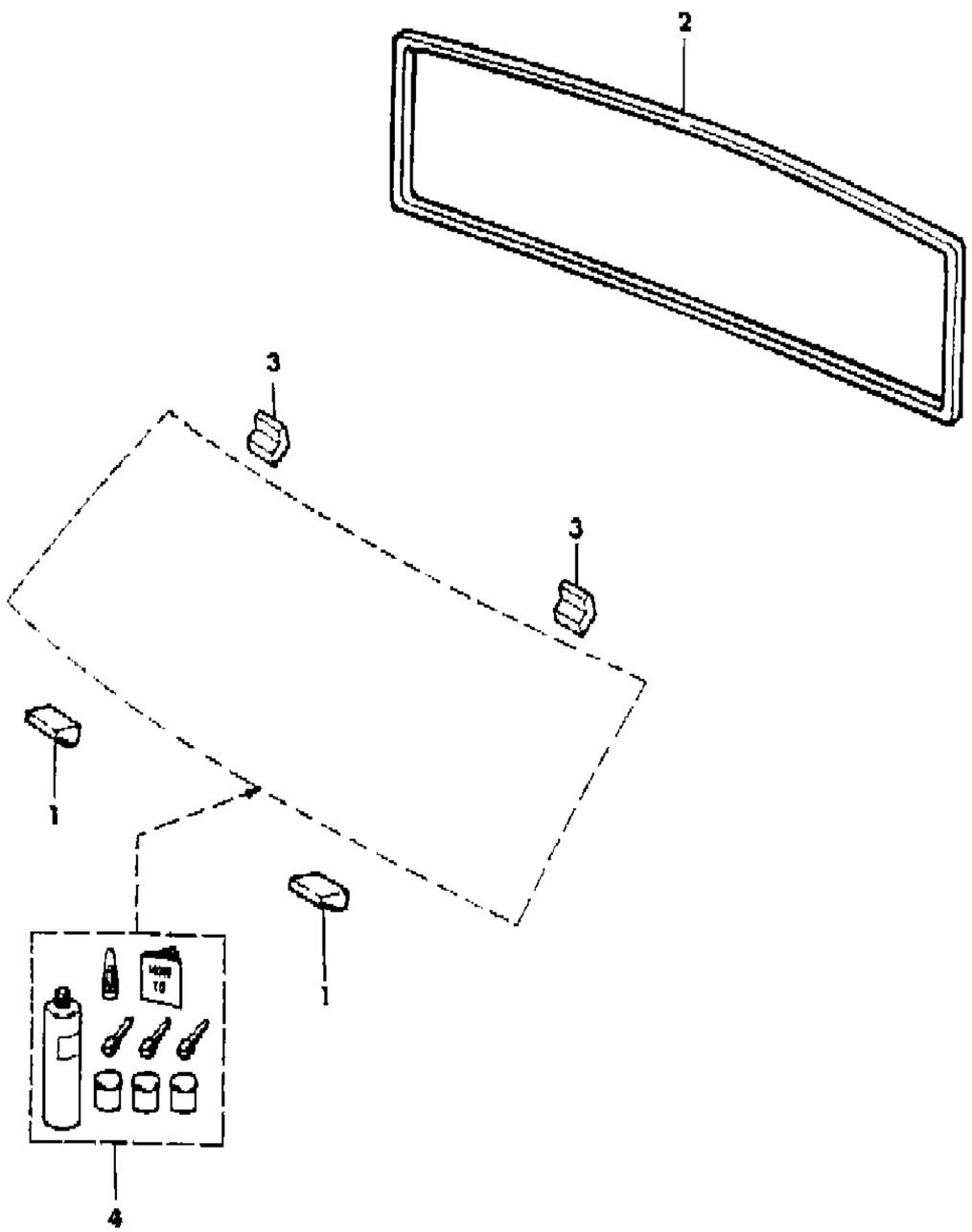

ITEM	PART NUMBER	QTY	BODY	MODEL	DESCRIPTION
1	5500 2604	2			SPACER, Windshield Bottom, Soluble
2	5500 7123	1			SEAL, Rear Window
3	5505 2617	2			SPACER, Windshield Top, Soluble
4	8310 0051	AR			MOUNTING PACKAGE, Windshield ***

MODEL CODES

16=Cherokee 2 Dr.(1981-83)	78=Cherokee 4WD-4 Dr.(1984-86)	64=Comanche 2WD-6 Ft. Box(1986)	25=J-10 Truck 7 Ft. Box(1981-84)
17=Cherokee 2 Dr.(1981-83)	85=CJ-5 (1981-83)	66=Comanche 2WD-7 Ft. Box(1986)	26=J10 Truck 8 Ft. Box(1981-86)
73=Cherokee 2WD-2 Dr.(1984-86)	86=CJ-6(1981)	63=Comanche 4WD-6 Ft. Box(1986)	27=J-20 Truck 8 Ft. Box(1981-86)
74=Cherokee 2WD-4 Dr.(1984-86)	87=CJ-7(1981-86)	65=Comanche 4WD-7 Ft. Box(1986)	15=Wagoneer 4 Dr.(1981-83)
18=Cherokee 4 Dr.(1981-83)	88=CJ-8, Scrambler(1981-86)	15=Grand Wagoneer 4 Dr.(1984-86)	75=Wagoneer 4WD-4 Dr.(1984-86)
77=Cherokee 4WD-2 Dr.(1984-86)			

BODY
CJ=CJ-5, CJ-6, CJ-7, CJ-8, Scrambler(1981-86)
MJ=Comanche Pickup(1986)

STYLES
SJ=Wagoneer(1981-83), Grand Wagoneer(1984-86), Cherokee(1981-83), J-10, J-20(1981-86)
XJ=Wagoneer(1984-86), Cherokee(1984-86)

AR = Use as Required - = Non Illustrated Part P.A.R. = Paint as Required

« RETURN TO GROUP INDEX

GLASS, REAR QUARTER FIXED 2 DOOR XJ CHEROKEE
Figure 23A-5900

81J69 5900

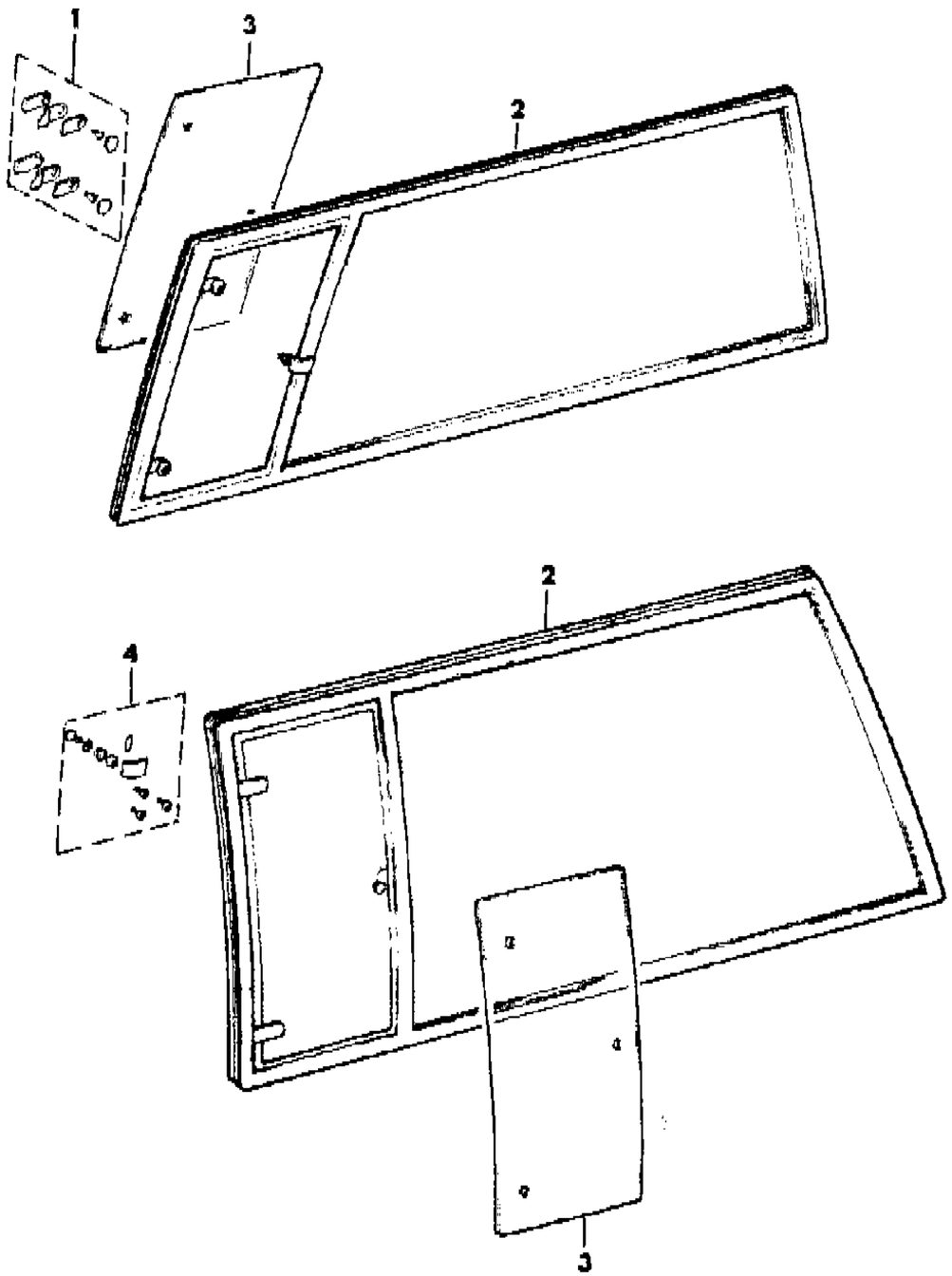

ITEM	PART NUMBER	QTY	BODY	MODEL	DESCRIPTION
1	8350 2274-5	1			HINGE PACKAGE ***
2					GLASS ASSEMBLY, Quarter
	5500 7980-1	1			Tinted, Easy Eye
	5500 7982-3	1			Tinted, Bronze
3					GLASS, Quarter Vent
	5500 7994-5	1			Tinted, Easy Eye
	5500 7996-7	1			Tinted, Bronze
4	8350 2272	2			HANDLE PACKAGE, Quarter Window Vent

MODEL CODES

16=Cherokee 2 Dr.(1981-83)
17=Cherokee 2 Dr.(1981-83)
73=Cherokee 2WD-2 Dr.(1984-86)
74=Cherokee 2WD-4 Dr.(1984-86)
18=Cherokee 4 Dr.(1981-83)
77=Cherokee 4WD-2 Dr.(1984-86)
78=Cherokee 4WD-4 Dr.(1984-86)
85=CJ-5 (1981-83)
86=CJ-6(1981)
87=CJ-7(1981-86)
88=CJ-8, Scrambler(1981-86)
64=Comanche 2WD-6 Ft. Box(1986)
66=Comanche 2WD-7 Ft. Box(1986)
63=Comanche 4WD-6 Ft. Box(1986)
65=Comanche 4WD-7 Ft. Box(1986)
15=Grand Wagoneer 4 Dr.(1984-86)
25=J-10 Truck 7 Ft. Box(1981-84)
26=J10 Truck 8 Ft. Box(1981-86)
27=J-20 Truck 8 Ft. Box(1981-86)
15=Wagoneer 4 Dr.(1981-83)
75=Wagoneer 4WD-4 Dr.(1984-86)

BODY
CJ=CJ-5, CJ-6, CJ-7, CJ-8, Scrambler(1981-86)
MJ=Comanche Pickup(1986)

STYLES
SJ=Wagoneer(1981-83), Grand Wagoneer(1984-86), Cherokee(1981-83), J-10, J-20(1981-86)
XJ=Wagoneer(1984-86), Cherokee(1984-86)

AR = Use as Required - = Non Illustrated Part P.A.R. = Paint as Required

« RETURN TO GROUP INDEX

SEAL LIFT DOOR XJ CHEROKEE, XJ WAGONEER
Figure 23A-6000

81J69 6000

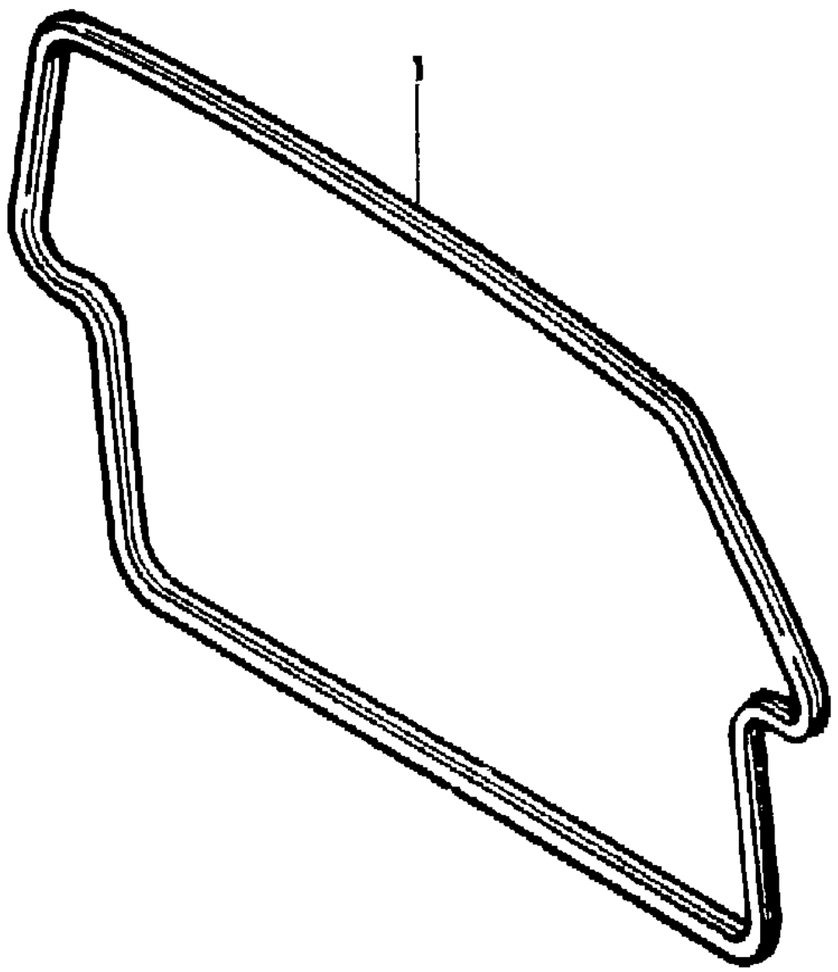

ITEM	PART NUMBER	QTY	BODY	MODEL	DESCRIPTION
1	5500 0312	1			SEAL, Lift Door

MODEL CODES

16=Cherokee 2 Dr.(1981-83)	78=Cherokee 4WD-4 Dr.(1984-86)	64=Comanche 2WD-6 Ft. Box(1986)	25=J-10 Truck 7 Ft. Box(1981-84)
17=Cherokee 2 Dr.(1981-83)	85=CJ-5 (1981-83)	66=Comanche 2WD-7 Ft. Box(1986)	26=J10 Truck 8 Ft. Box(1981-86)
73=Cherokee 2WD-2 Dr.(1984-86)	86=CJ-6(1981)	63=Comanche 4WD-6 Ft. Box(1986)	27=J-20 Truck 8 Ft. Box(1981-86)
74=Cherokee 2WD-4 Dr.(1984-86)	87=CJ-7(1981-86)	65=Comanche 4WD-7 Ft. Box(1986)	15=Wagoneer 4 Dr.(1981-83)
18=Cherokee 4 Dr.(1981-83)	88=CJ-8, Scrambler(1981-86)	15=Grand Wagoneer 4 Dr.(1984-86)	75=Wagoneer 4WD-4 Dr.(1984-86)
77=Cherokee 4WD-2 Dr.(1984-86)			

BODY
CJ=CJ-5, CJ-6, CJ-7, CJ-8, Scrambler(1981-86)
MJ=Comanche Pickup(1986)

STYLES
SJ=Wagoneer(1981-83), Grand Wagoneer(1984-86), Cherokee(1981-83), J-10, J-20(1981-86)
XJ=Wagoneer(1984-86), Cherokee(1984-86)

AR = Use as Required - = Non Illustrated Part P.A.R. = Paint as Required

« RETURN TO GROUP INDEX

SEALS, WINDOW 2 DOOR XJ CHEROKEE
Figure 23A-6100

81J69 6100

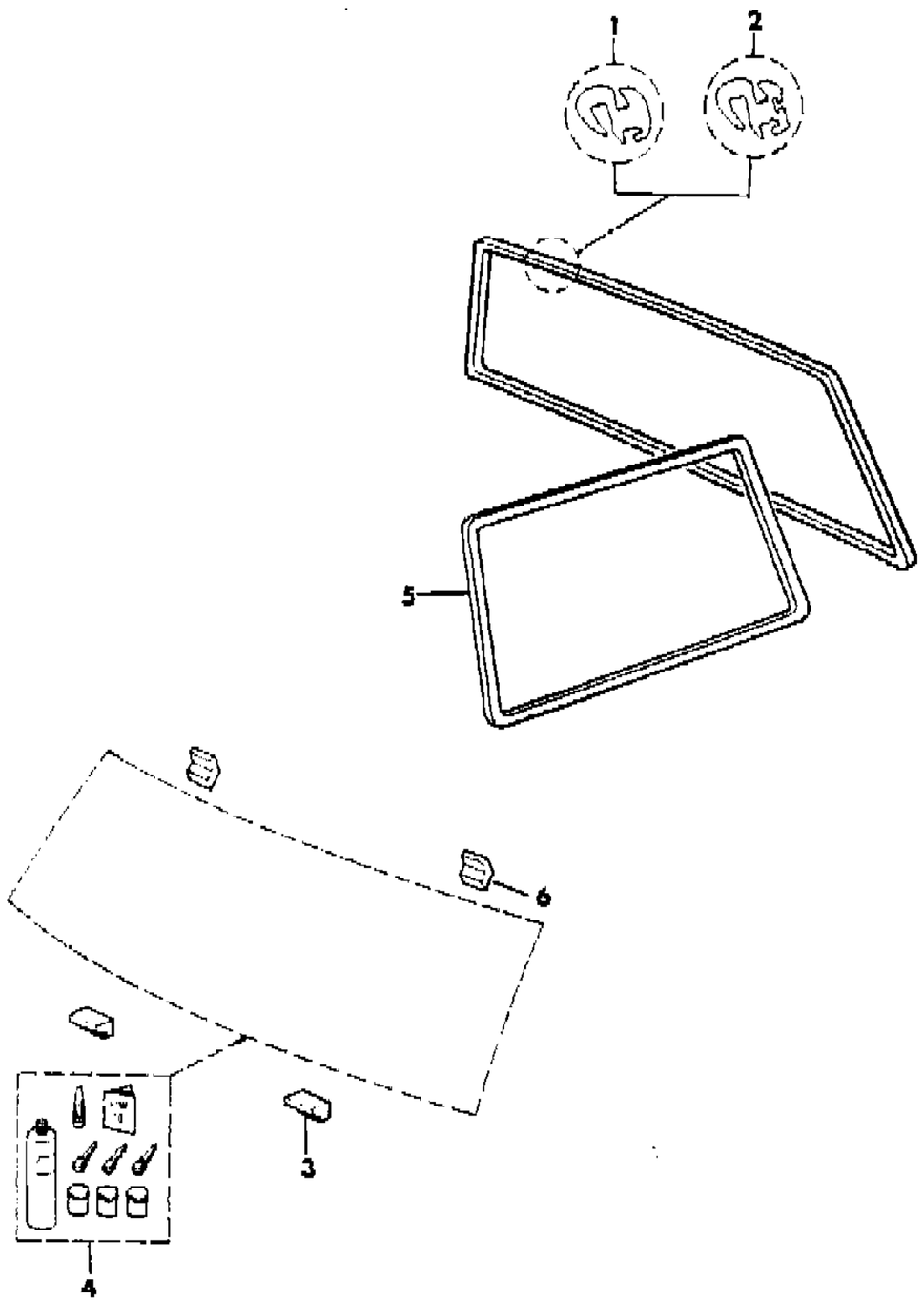

ITEM	PART NUMBER	QTY	BODY	MODEL	DESCRIPTION
1	5500 5394	1			SEAL, Lift Door Glass
2	5500 5328	1			SEAL, Lift Door Glass
3	5500 2604	2			SPACER, Windshield Bottom, Soluble
4	8310 0051	AR			MOUNTING PACKAGE, Windshield ***
5	5500 5390-1	1			SEAL, Quarter Window
6	5505 2617	2			SPACER, Windshield Top, Soluble

MODEL CODES

16=Cherokee 2 Dr.(1981-83)	78=Cherokee 4WD-4 Dr.(1984-86)	64=Comanche 2WD-6 Ft. Box(1986)	25=J-10 Truck 7 Ft. Box(1981-84)
17=Cherokee 2 Dr.(1981-83)	85=CJ-5 (1981-83)	66=Comanche 2WD-7 Ft. Box(1986)	26=J10 Truck 8 Ft. Box(1981-86)
73=Cherokee 2WD-2 Dr.(1984-86)	86=CJ-6(1981)	63=Comanche 4WD-6 Ft. Box(1986)	27=J-20 Truck 8 Ft. Box(1981-86)
74=Cherokee 2WD-4 Dr.(1984-86)	87=CJ-7(1981-86)	65=Comanche 4WD-7 Ft. Box(1986)	15=Wagoneer 4 Dr.(1981-83)
18=Cherokee 4 Dr.(1981-83)	88=CJ-8, Scrambler(1981-86)	15=Grand Wagoneer 4 Dr.(1984-86)	75=Wagoneer 4WD-4 Dr.(1984-86)
77=Cherokee 4WD-2 Dr.(1984-86)			

BODY
CJ=CJ-5, CJ-6, CJ-7, CJ-8, Scrambler(1981-86)
MJ=Comanche Pickup(1986)

STYLES
SJ=Wagoneer(1981-83), Grand Wagoneer(1984-86), Cherokee(1981-83), J-10, J-20(1981-86)
XJ=Wagoneer(1984-86), Cherokee(1984-86)

AR = Use as Required - = Non Illustrated Part P.A.R. = Paint as Required

« RETURN TO GROUP INDEX

GLASS, STATIONARY WINDSHIELD, QUARTER AND LIFT DOOR 2 DOOR - XJ CHEROKEE
Figure 23A-6200

81J69 6200

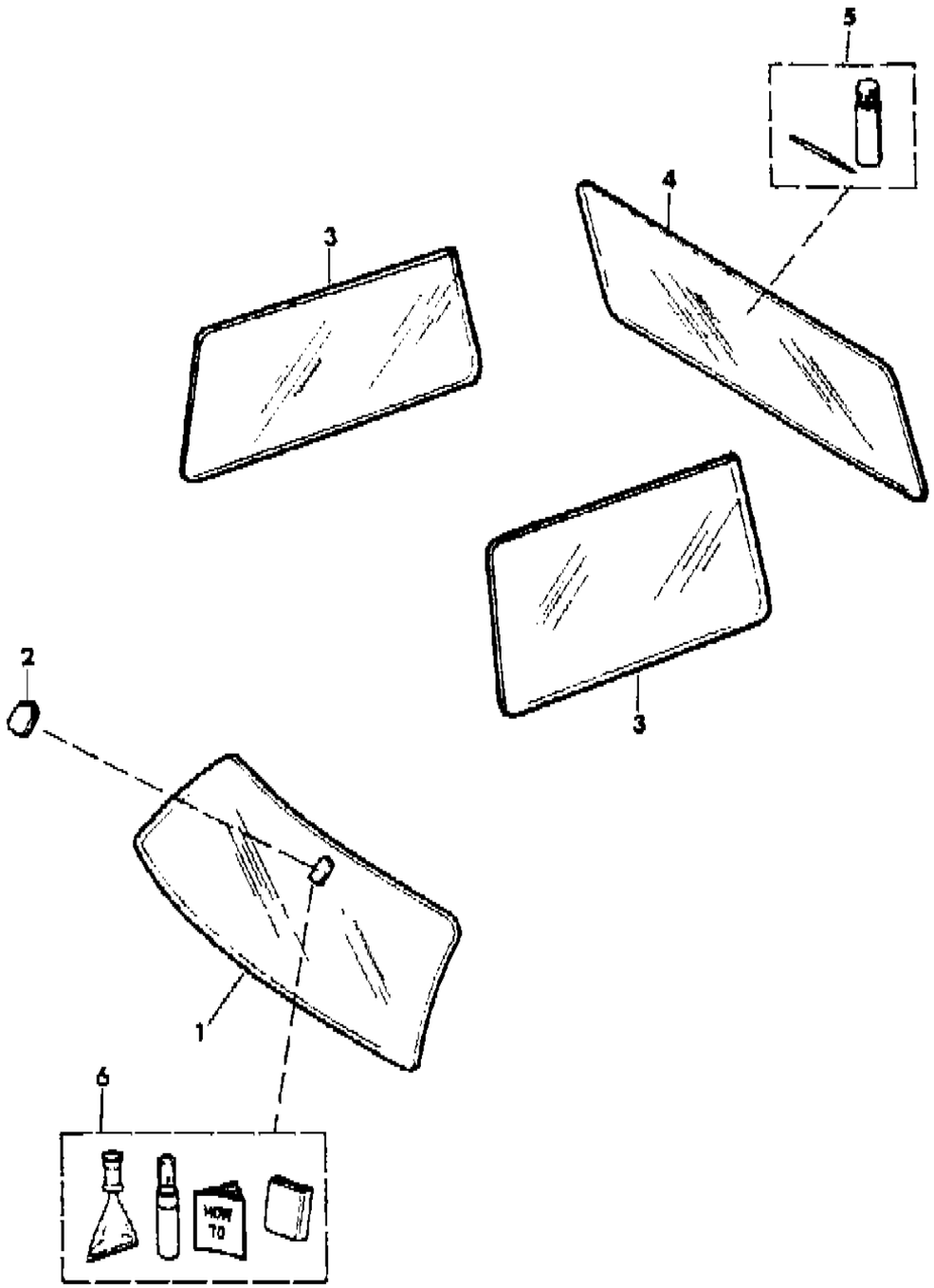

ITEM	PART NUMBER	QTY	BODY	MODEL	DESCRIPTION
1					GLASS, Windshield
	5500 0552	1			Clear, US, CANADA
	5500 0553	1			Tinted, US, CANADA
	5500 4595	1			Clear, EXPORT
	5500 4596	1			Tinted, EXPORT
2	J365 7374	1			SUPPORT, Inside Rear View Mirror Mounting (A)
3					GLASS, Quarter
	5500 0184-5	1			Clear
	5500 0186-7	1			Tinted, Green
	5500 0696-7	1			Tinted, Bronze
4					GLASS, Lift Door
	5500 0292	1			Clear
	5500 0179	1			Tinted, Green
	5500 0628	1			Tinted, Green, With Rear Window Defroster
	5501 8738	1			Tinted, Bronze, With Rear Window Defroster
5	J812 3332	1			REPAIR PACKAGE, Grid
6	J813 3768	1			MOUNTING PACKAGE, Mirror, EXPORT ***

(A) The Mirror Support is replacing Mirror Mounting Package. When installing a Mirror Support, Use Locktite #312 Adhesive & Accelerator for #312. (c) End of decal is open

MODEL CODES

16=Cherokee 2 Dr.(1981-83)
17=Cherokee 2 Dr.(1981-83)
73=Cherokee 2WD-2 Dr.(1984-86)
74=Cherokee 2WD-4 Dr.(1984-86)
18=Cherokee 4 Dr.(1981-83)
77=Cherokee 4WD-2 Dr.(1984-86)
78=Cherokee 4WD-4 Dr.(1984-86)
85=CJ-5 (1981-83)
86=CJ-6(1981)
87=CJ-7(1981-86)
88=CJ-8, Scrambler(1981-86)
64=Comanche 2WD-6 Ft. Box(1986)
66=Comanche 2WD-7 Ft. Box(1986)
63=Comanche 4WD-6 Ft. Box(1986)
65=Comanche 4WD-7 Ft. Box(1986)
15=Grand Wagoneer 4 Dr.(1984-86)
25=J-10 Truck 7 Ft. Box(1981-84)
26=J10 Truck 8 Ft. Box(1981-86)
27=J-20 Truck 8 Ft. Box(1981-86)
15=Wagoneer 4 Dr.(1981-83)
75=Wagoneer 4WD-4 Dr.(1984-86)

BODY
CJ=CJ-5, CJ-6, CJ-7, CJ-8, Scrambler(1981-86)
MJ=Comanche Pickup(1986)

STYLES
SJ=Wagoneer(1981-83), Grand Wagoneer(1984-86), Cherokee(1981-83), J-10, J-20(1981-86)
XJ=Wagoneer(1984-86), Cherokee(1984-86)

AR = Use as Required - = Non Illustrated Part P.A.R. = Paint as Required

« RETURN TO GROUP INDEX

GLASS, STATIONARY WINDSHIELD, QUARTER AND LIFT DOOR 4 DOOR - XJ CHEROKEE, XJ WAGONEER
Figure 23A-6300

81J69 6300

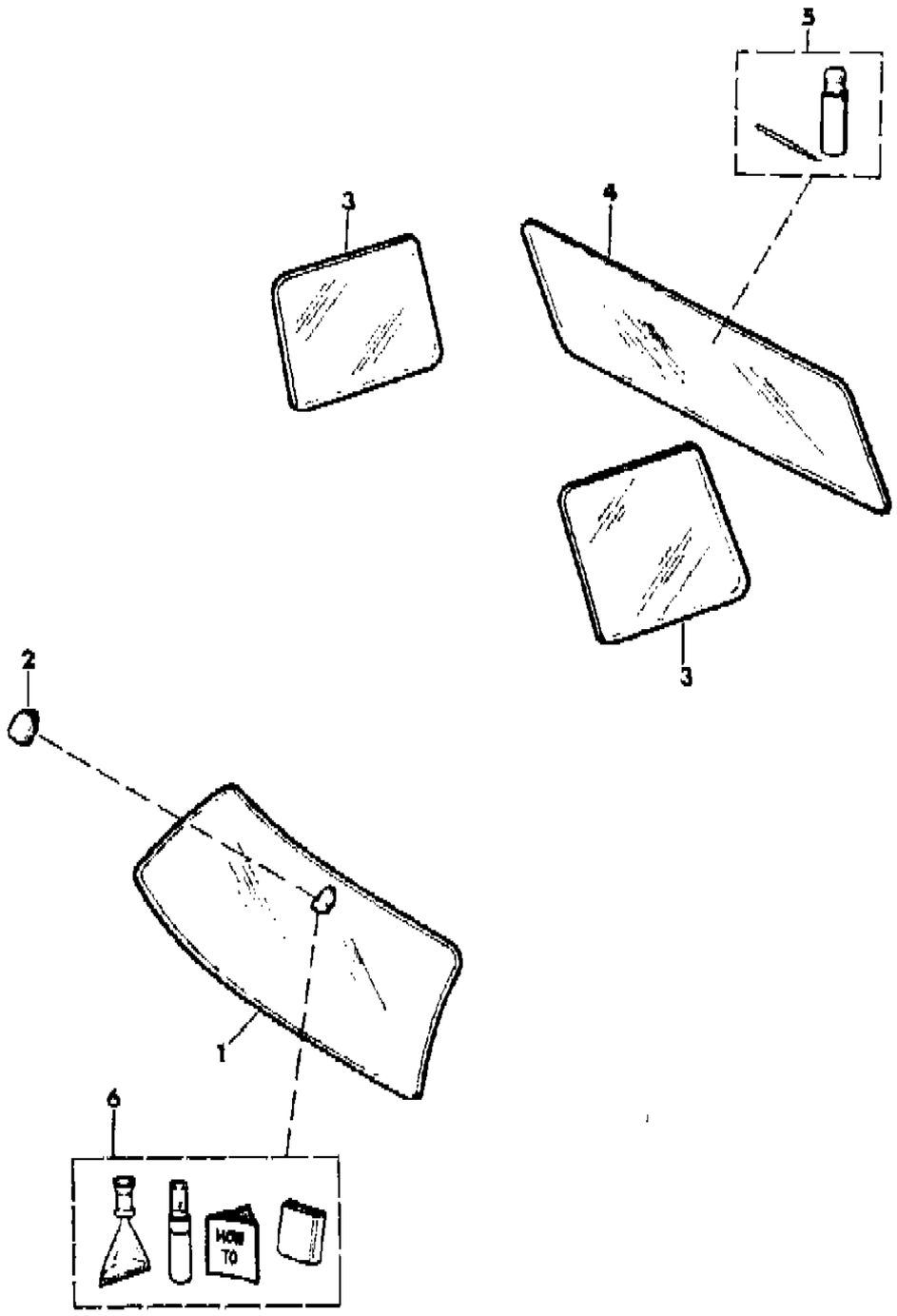

ITEM	PART NUMBER	QTY	BODY	MODEL	DESCRIPTION
1					GLASS, Windshield
	5500 0552	1			Clear, US, CANADA
	5500 0553	1			Tinted, US, CANADA
	5500 4595	1			Clear, EXPORT
	5500 4596	1			Tinted, EXPORT
2	J365 7374	1			SUPPORT, Inside Rear View Mirror Mounting (A)
3					GLASS, Quarter
	5500 0172-3	1			Clear
	5500 0700-1	1			Tinted, Green
	5501 8654-5	1			Tinted, Bronze
4					GLASS, Lift Door
	5500 0292	1			Clear
	5500 0179	1			Tinted, Green
	5500 0628	1			Tinted, Green, With Rear Window Defogger
	5501 8738	1			Tinted, Bronze, With Rear Window Defogger
5	J812 3332	1			REPAIR PACKAGE, Grid
6	J813 3768	1			MOUNTING PACKAGE, Mirror, EXPORT ***

(A) The Mirror Support is replacing Mirror Mtg. Package. When installing a Mirror Support, use Locktite #312 Adhesive and Accelerator for #312. (c) End of decal is open

MODEL CODES

16=Cherokee 2 Dr.(1981-83)	78=Cherokee 4WD-4 Dr.(1984-86)	64=Comanche 2WD-6 Ft. Box(1986)	25=J-10 Truck 7 Ft. Box(1981-84)
17=Cherokee 2 Dr.(1981-83)	85=CJ-5 (1981-83)	66=Comanche 2WD-7 Ft. Box(1986)	26=J10 Truck 8 Ft. Box(1981-86)
73=Cherokee 2WD-2 Dr.(1984-86)	86=CJ-6(1981)	63=Comanche 4WD-6 Ft. Box(1986)	27=J-20 Truck 8 Ft. Box(1981-86)
74=Cherokee 2WD-4 Dr.(1984-86)	87=CJ-7(1981-86)	65=Comanche 4WD-7 Ft. Box(1986)	15=Wagoneer 4 Dr.(1981-83)
18=Cherokee 4 Dr.(1981-83)	88=CJ-8, Scrambler(1981-86)	15=Grand Wagoneer 4 Dr.(1984-86)	75=Wagoneer 4WD-4 Dr.(1984-86)
77=Cherokee 4WD-2 Dr.(1984-86)			

BODY
CJ=CJ-5, CJ-6, CJ-7, CJ-8, Scrambler(1981-86)
MJ=Comanche Pickup(1986)

STYLES
SJ=Wagoneer(1981-83), Grand Wagoneer(1984-86), Cherokee(1981-83), J-10, J-20(1981-86)
XJ=Wagoneer(1984-86), Cherokee(1984-86)

AR = Use as Required - = Non Illustrated Part P.A.R. = Paint as Required

« RETURN TO GROUP INDEX

SEALS QUARTER AND LIFT DOOR WINDOW 4 DOOR - XJ CHEROKEE, XJ WAGONEER
Figure 23A-6400

81J69 6400

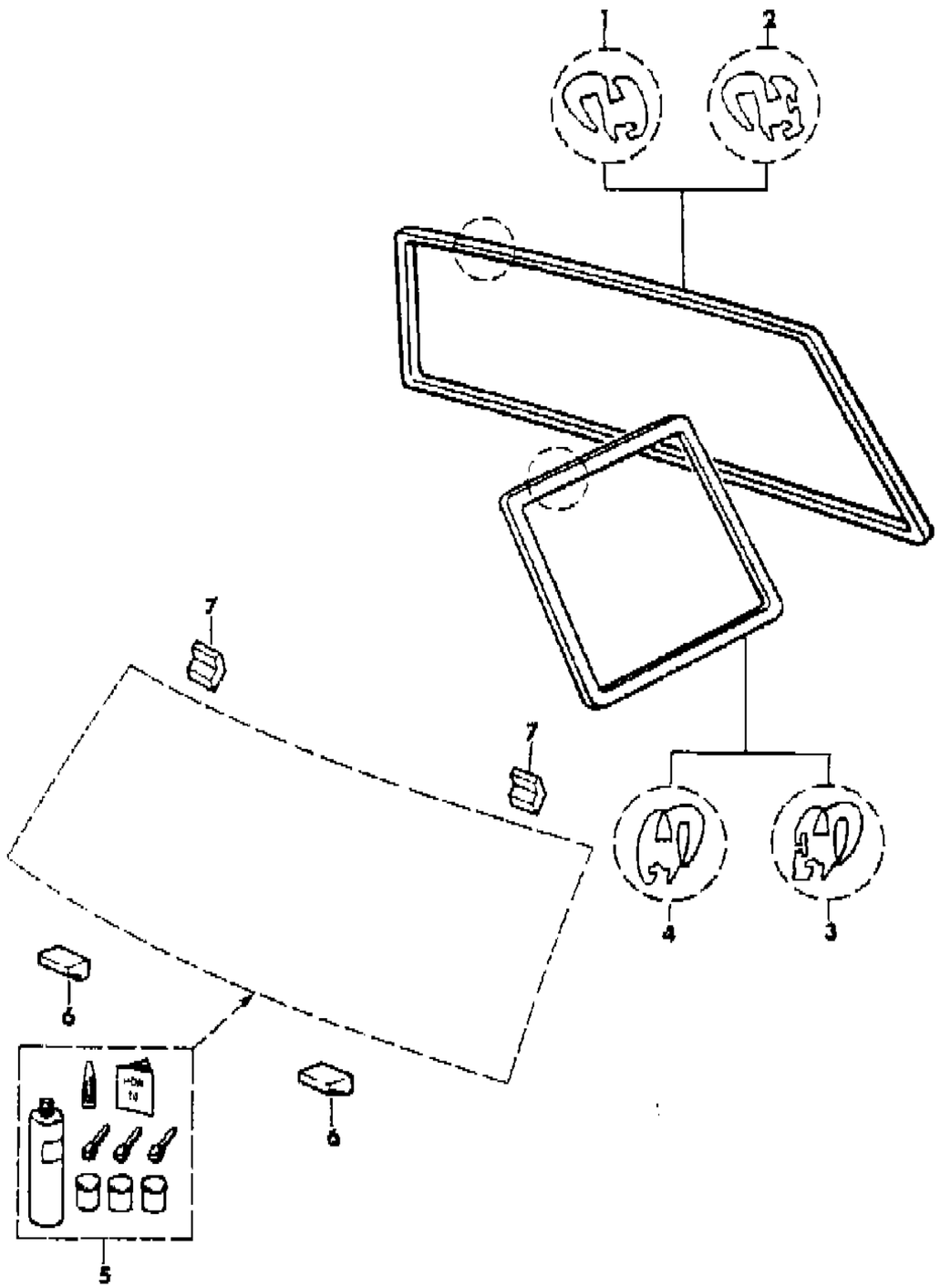

ITEM	PART NUMBER	QTY	BODY	MODEL	DESCRIPTION
1	5500 5394	1			SEAL, Lift Door Glass
2	5500 5328	1			SEAL, Lift Door Glass
3	5500 5380-1	1			SEAL, Quarter Window, WAGONEER
4	5500 5388-9	1			SEAL, Quarter Window, CHEROKEE
5	8310 0051	AR			MOUNTING PACKAGE, Windshield ***
6	5500 2604	2			SPACER, Windshield Bottom, Soluble
7	5505 2617	2			SPACER, Windshield Top, Soluble

MODEL CODES

16=Cherokee 2 Dr.(1981-83)
17=Cherokee 2 Dr.(1981-83)
73=Cherokee 2WD-2 Dr.(1984-86)
74=Cherokee 2WD-4 Dr.(1984-86)
18=Cherokee 4 Dr.(1981-83)
77=Cherokee 4WD-2 Dr.(1984-86)
78=Cherokee 4WD-4 Dr.(1984-86)
85=CJ-5 (1981-83)
86=CJ-6(1981)
87=CJ-7(1981-86)
88=CJ-8, Scrambler(1981-86)
64=Comanche 2WD-6 Ft. Box(1986)
66=Comanche 2WD-7 Ft. Box(1986)
63=Comanche 4WD-6 Ft. Box(1986)
65=Comanche 4WD-7 Ft. Box(1986)
15=Grand Wagoneer 4 Dr.(1984-86)
25=J-10 Truck 7 Ft. Box(1981-84)
26=J10 Truck 8 Ft. Box(1981-86)
27=J-20 Truck 8 Ft. Box(1981-86)
15=Wagoneer 4 Dr.(1981-83)
75=Wagoneer 4WD-4 Dr.(1984-86)

BODY
CJ=CJ-5, CJ-6, CJ-7, CJ-8, Scrambler(1981-86)
MJ=Comanche Pickup(1986)

STYLES
SJ=Wagoneer(1981-83), Grand Wagoneer(1984-86), Cherokee(1981-83), J-10, J-20(1981-86)
XJ=Wagoneer(1984-86), Cherokee(1984-86)

AR = Use as Required - = Non Illustrated Part P.A.R. = Paint as Required

« RETURN TO GROUP INDEX

PAN, FLOOR SJ CHEROKEE, SJ WAGONEER
Figure 23A-6500

81J69 6500

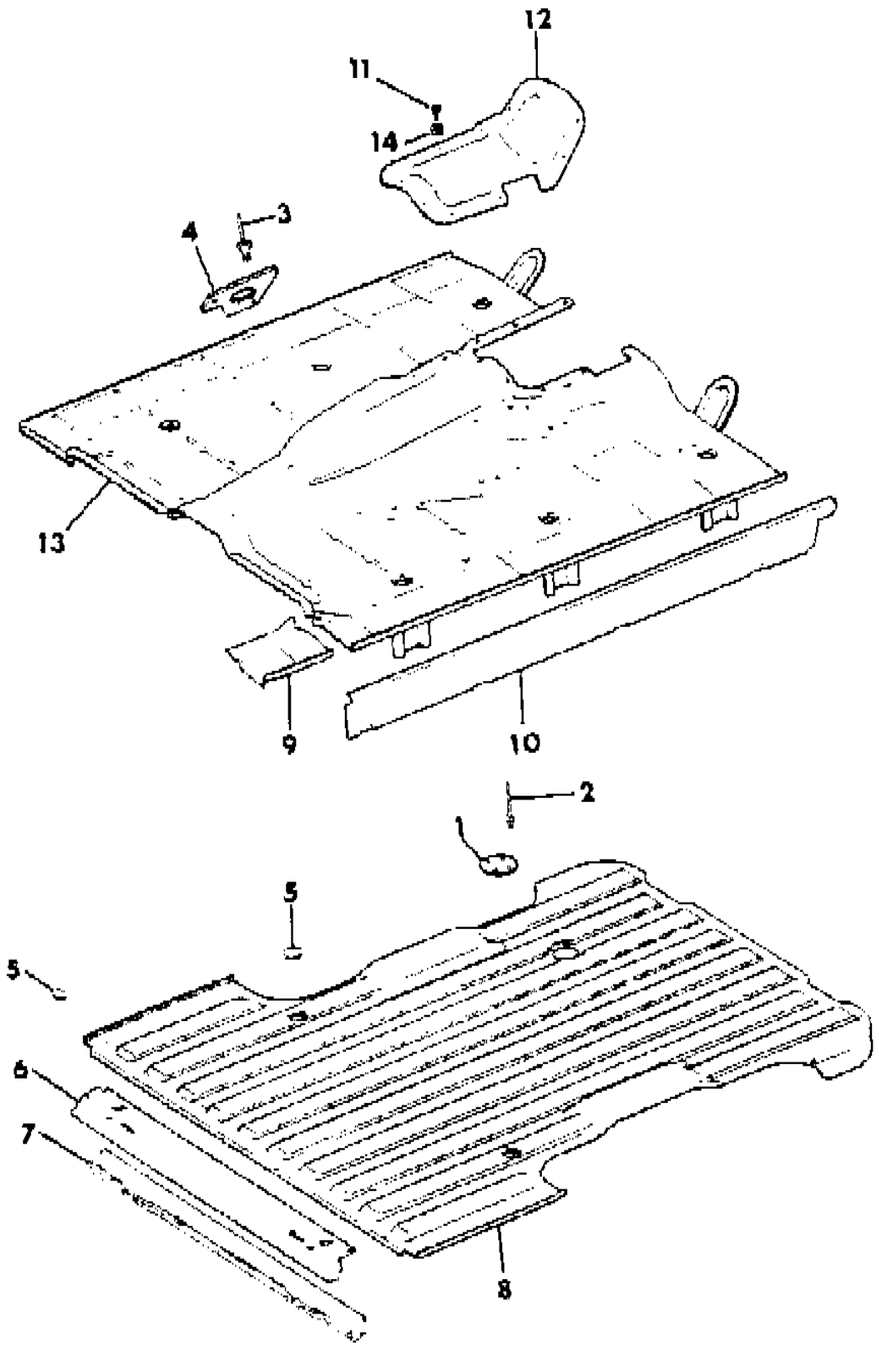

ITEM	PART NUMBER	QTY	BODY	MODEL	DESCRIPTION
1	J575 2636	1			PLATE
2	J400 5899	4			RIVET
3	J400 5300	2			RIVET
4					COVER, Transmission
	J575 1841	1			With Manual
	J575 1826	1			With Automatic
5	J400 6453	AR			PLUG
6	J545 1015	1			SILL, Rear Cross
7	J575 8348	1			REINFORCEMENT, Sill
8	J575 8349	1			PAN, Rear Floor
9					PANEL
	J545 1552	1			Right
	J545 1551	1			Left
10					SILL, Body Side
					Without Cherokee Chief Model
	J546 5032	1			Right
	J546 5031	1			Left
					With Cherokee Chief Model
	J546 5036	1			Right
	J546 5035	1			Left
11	J067 3600	AR			SCREW
12					COVER, Floor Pan
	J575 1813	1			1981: With Manual Transmission
	J575 1812	1			1981: With Automatic Transmission
	J576 1125	1			1982-86: With Four Speed Transmission
	J576 1126	1			1982-86: With Five Speed Transmission
	J576 1124	1			1982-86: With Automatic Transmission
13					PAN, Front Floor
	J575 8237	1			1981: Left Hand Drive, Without Model 17
	J576 3517	1			1981-83: Left Hand Drive, With Model 17
	J576 3514	1			1982-86: Left Hand Drive , Without Model 17
	J805 1180	1			1981-83: Right Hand Drive, With Model 17
	J805 1169	1			1982-86: Right Hand Drive, Without Model 17
14	J012 0386	AR			WASHER

MODEL CODES

16=Cherokee 2 Dr.(1981-83)	78=Cherokee 4WD-4 Dr.(1984-86)	64=Comanche 2WD-6 Ft. Box(1986)	25=J-10 Truck 7 Ft. Box(1981-84)
17=Cherokee 2 Dr.(1981-83)	85=CJ-5 (1981-83)	66=Comanche 2WD-7 Ft. Box(1986)	26=J10 Truck 8 Ft. Box(1981-86)
73=Cherokee 2WD-2 Dr.(1984-86)	86=CJ-6(1981)	63=Comanche 4WD-6 Ft. Box(1986)	27=J-20 Truck 8 Ft. Box(1981-86)
74=Cherokee 2WD-4 Dr.(1984-86)	87=CJ-7(1981-86)	65=Comanche 4WD-7 Ft. Box(1986)	15=Wagoneer 4 Dr.(1981-83)
18=Cherokee 4 Dr.(1981-83)	88=CJ-8, Scrambler(1981-86)	15=Grand Wagoneer 4 Dr.(1984-86)	75=Wagoneer 4WD-4 Dr.(1984-86)
77=Cherokee 4WD-2 Dr.(1984-86)			

BODY
CJ=CJ-5, CJ-6, CJ-7, CJ-8, Scrambler(1981-86)
MJ=Comanche Pickup(1986)

STYLES
SJ=Wagoneer(1981-83), Grand Wagoneer(1984-86), Cherokee(1981-83), J-10, J-20(1981-86)
XJ=Wagoneer(1984-86), Cherokee(1984-86)

AR = Use as Required - = Non Illustrated Part P.A.R. = Paint as Required

« RETURN TO GROUP INDEX

PAN, FLOOR J10, J20
Figure 23A-6600

81J69 6600

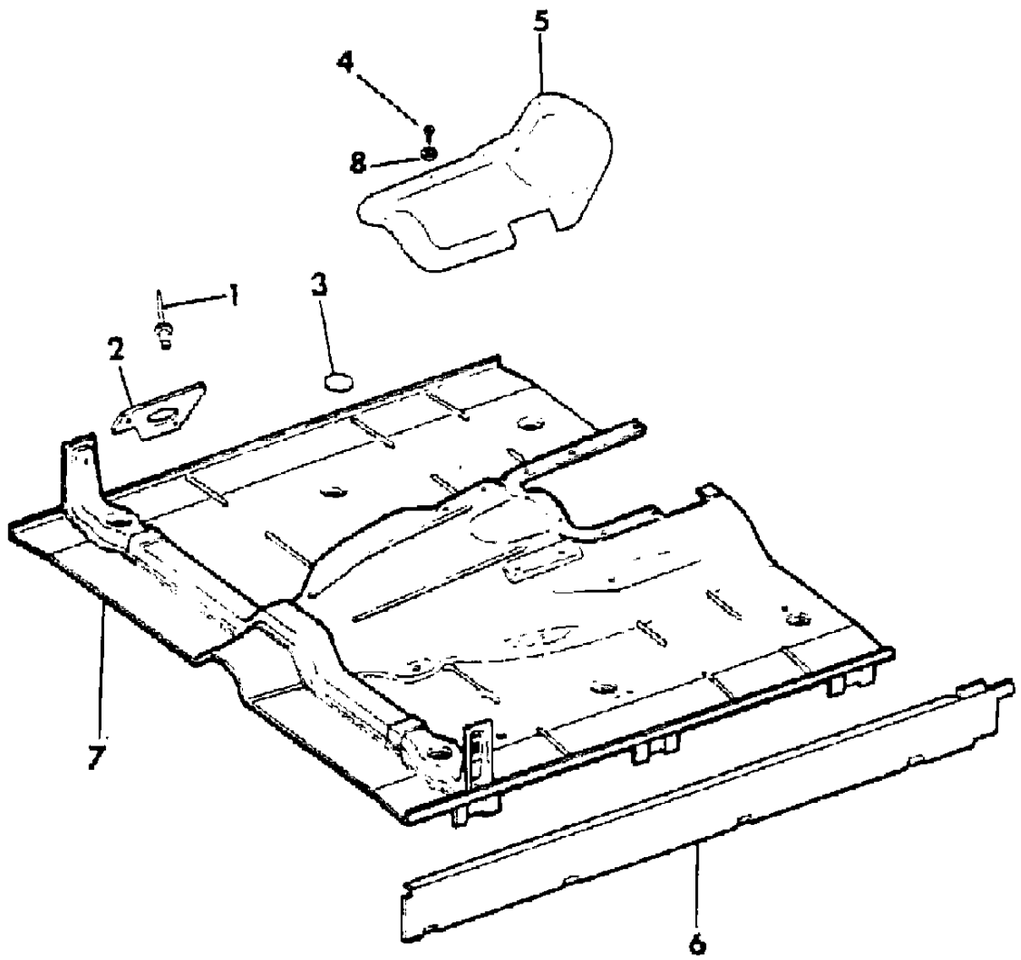

ITEM	PART NUMBER	QTY	BODY	MODEL	DESCRIPTION
1	J400 5300	2			RIVET
2					COVER
	J575 1841	1			With Manual Transmission
	J575 1826	1			With Automatic Transmission
3	J400 6453	4			PLUG
4	J067 3600	AR			SCREW
5					COVER, Floor Pan
	J575 1813	1			1981: With Manual Transmission
	J575 1812	1			1981: With Automatic Transmission
	J576 1125	1			1982-86: With Four Speed Transmission
	J575 1126	1			1982-86: With Five Speed Transmission
	J575 1124	1			1982-86: With Automatic Transmission
6					SILL, Body Side
	J546 5034	1			Right
	J546 5033	1			Left
7					PAN, Front Floor
	J575 8239	1			1981
	J576 3515	1			1982-86
8	J012 0386	AR			WASHER

MODEL CODES

16=Cherokee 2 Dr.(1981-83)
17=Cherokee 2 Dr.(1981-83)
73=Cherokee 2WD-2 Dr.(1984-86)
74=Cherokee 2WD-4 Dr.(1984-86)
18=Cherokee 4 Dr.(1981-83)
77=Cherokee 4WD-2 Dr.(1984-86)
78=Cherokee 4WD-4 Dr.(1984-86)
85=CJ-5 (1981-83)
86=CJ-6(1981)
87=CJ-7(1981-86)
88=CJ-8, Scrambler(1981-86)
64=Comanche 2WD-6 Ft. Box(1986)
66=Comanche 2WD-7 Ft. Box(1986)
63=Comanche 4WD-6 Ft. Box(1986)
65=Comanche 4WD-7 Ft. Box(1986)
15=Grand Wagoneer 4 Dr.(1984-86)
25=J-10 Truck 7 Ft. Box(1981-84)
26=J10 Truck 8 Ft. Box(1981-86)
27=J-20 Truck 8 Ft. Box(1981-86)
15=Wagoneer 4 Dr.(1981-83)
75=Wagoneer 4WD-4 Dr.(1984-86)

BODY
CJ=CJ-5, CJ-6, CJ-7, CJ-8, Scrambler(1981-86)
MJ=Comanche Pickup(1986)

STYLES
SJ=Wagoneer(1981-83), Grand Wagoneer(1984-86), Cherokee(1981-83), J-10, J-20(1981-86)
XJ=Wagoneer(1984-86), Cherokee(1984-86)

AR = Use as Required - = Non Illustrated Part P.A.R. = Paint as Required

« RETURN TO GROUP INDEX

SEALS AND PLUGS, BODY SJ CHEROKEE, SJ WAGONEER, J10, J20
Figure 23A-6700

81J69 6700

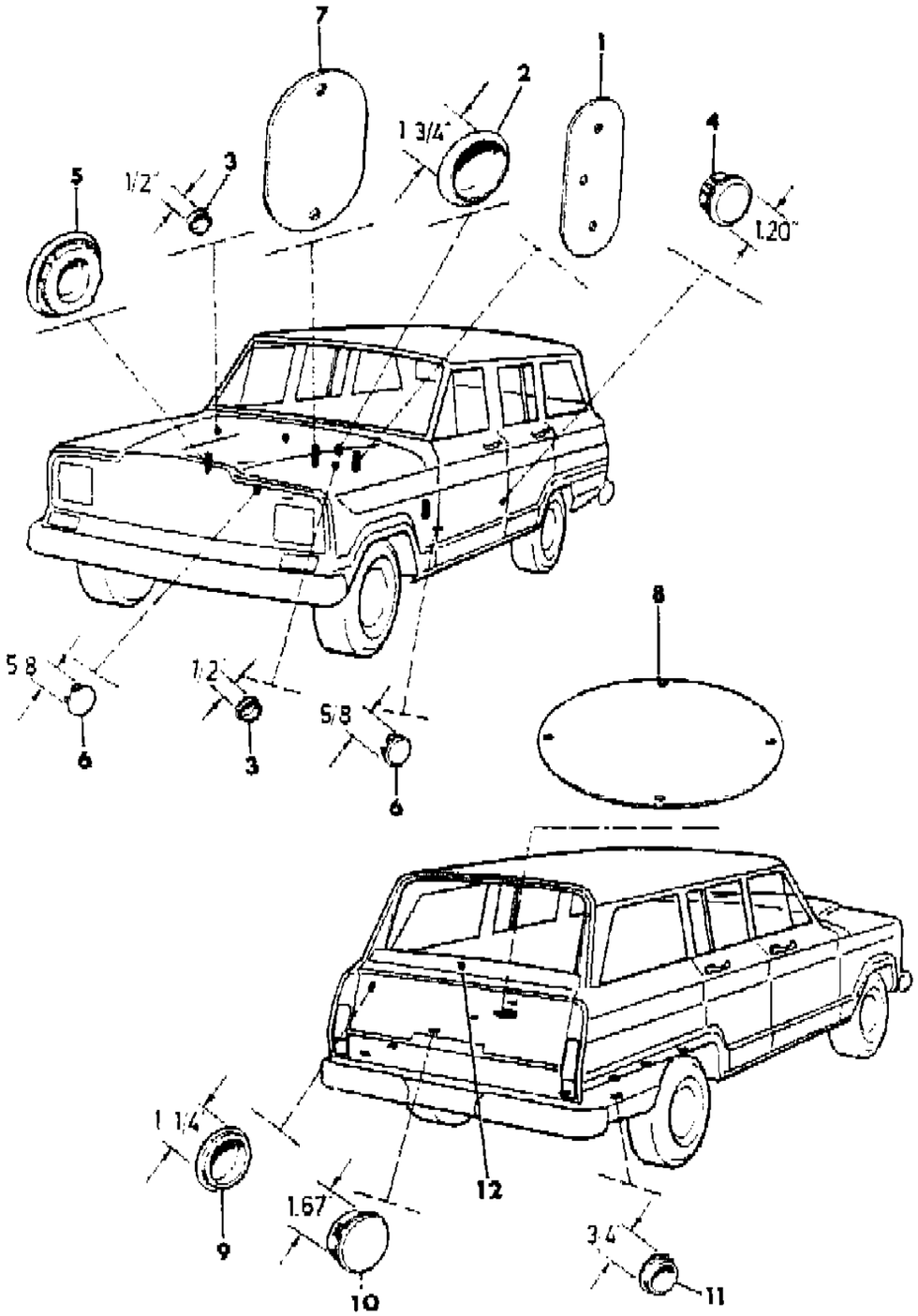

ITEM	PART NUMBER	QTY	BODY	MODEL	DESCRIPTION
1	J535 1625	1			PLATE
2	J400 0534	1		15	PLUG, 1.75" diameter hole
3	J400 1716	2			PLUG, .50" diameter hole
4	J400 6481	2		15	PLUG, 1" diameter hole
5	J400 6392	2			PLUG, 1.50" x 2.32" hole
6	J400 4888	AR			PLUG, .625" diameter hole
7	J545 3638	1		25,26,2	PLATE
8	J575 2636	1		15	COVER
9	J400 4649	1		15	PLUG, 1.25" diameter hole
10	J400 6453	AR			PLUG, 1.50" diameter hole
11	J400 0333	2		15	PLUG, 3/4" diameter hole
12	5501 7818	1		15	PLUG, used without rear window wiper

MODEL CODES

16=Cherokee 2 Dr.(1981-83)
17=Cherokee 2 Dr.(1981-83)
73=Cherokee 2WD-2 Dr.(1984-86)
74=Cherokee 2WD-4 Dr.(1984-86)
18=Cherokee 4 Dr.(1981-83)
77=Cherokee 4WD-2 Dr.(1984-86)
78=Cherokee 4WD-4 Dr.(1984-86)
85=CJ-5 (1981-83)
86=CJ-6(1981)
87=CJ-7(1981-86)
88=CJ-8, Scrambler(1981-86)
64=Comanche 2WD-6 Ft. Box(1986)
66=Comanche 2WD-7 Ft. Box(1986)
63=Comanche 4WD-6 Ft. Box(1986)
65=Comanche 4WD-7 Ft. Box(1986)
15=Grand Wagoneer 4 Dr.(1984-86)
25=J-10 Truck 7 Ft. Box(1981-84)
26=J10 Truck 8 Ft. Box(1981-86)
27=J-20 Truck 8 Ft. Box(1981-86)
15=Wagoneer 4 Dr.(1981-83)
75=Wagoneer 4WD-4 Dr.(1984-86)

BODY
CJ=CJ-5, CJ-6, CJ-7, CJ-8, Scrambler(1981-86)
MJ=Comanche Pickup(1986)

STYLES
SJ=Wagoneer(1981-83), Grand Wagoneer(1984-86), Cherokee(1981-83), J-10, J-20(1981-86)
XJ=Wagoneer(1984-86), Cherokee(1984-86)

AR = Use as Required - = Non Illustrated Part P.A.R. = Paint as Required

« RETURN TO GROUP INDEX

FENDERS, FRONT SJ CHEROKEE, SJ WAGONEER, J10, J20
Figure 23A-6800

81J69 6800

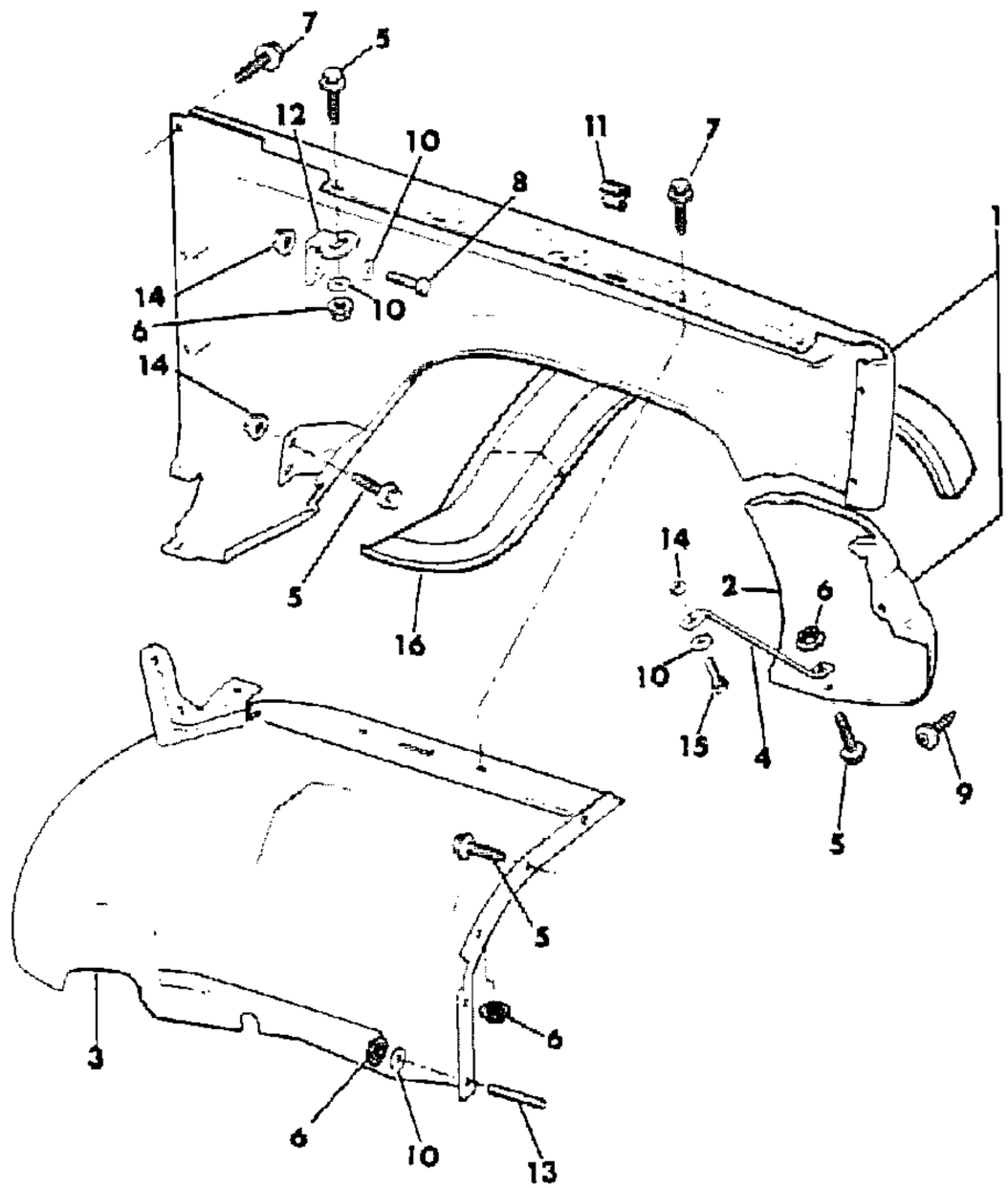

ITEM	PART NUMBER	QTY	BODY	MODEL	DESCRIPTION
1					FENDER
	J813 3074-5	1		15,16,1	1981-86
	J575 7322-3	1		16,18	1981-83: EXPORT
	J575 7318-9	1		17	1981-83: EXPORT
	J813 3072-3	1		17,25,2	1981-86
	J575 7322-3	1		15	1984-86: Belgium, Economic Commission of Europe, France
2					EXTENSION
	J813 3076-7	1		15,16,1	
	J813 3070-1	1		17,25,2	
3					PANEL, Splash
	J546 2768	1			Right, Six Cylinder Engine
	J575 8242	1			Right, Eight Cylinder Engine
	J575 8369	1			Left
4					BRACE
	J095 9692	2		15,16,1	
	J095 9697	2		17,25,2	
5	J400 4455	AR			SCREW
6					NUT
	J400 4866	AR			1981
	J400 7045	AR			1982-86
7	J400 4520	AR			SCREW
8					SCREW
	J942 4824	AR			.75" long
	J400 4455	AR			1.1" long
9	J400 5690	2			SCREW, .56"lg
10	J096 1070	AR			WASHER
11	J096 3331	4			BUMPER
12	J095 7407	2			BRACKET
13	J095 8166	2			STUD
14	J096 1069	2			NUT
15	J096 2398	2			SCREW
16					EXTENSION, P.A.R.
	J095 6736	1			Right
	J095 6735	1			Left

MODEL CODES

16=Cherokee 2 Dr.(1981-83)
17=Cherokee 2 Dr.(1981-83)
73=Cherokee 2WD-2 Dr.(1984-86)
74=Cherokee 2WD-4 Dr.(1984-86)
18=Cherokee 4 Dr.(1981-83)
77=Cherokee 4WD-2 Dr.(1984-86)
78=Cherokee 4WD-4 Dr.(1984-86)
85=CJ-5 (1981-83)
86=CJ-6(1981)
87=CJ-7(1981-86)
88=CJ-8, Scrambler(1981-86)
64=Comanche 2WD-6 Ft. Box(1986)
66=Comanche 2WD-7 Ft. Box(1986)
63=Comanche 4WD-6 Ft. Box(1986)
65=Comanche 4WD-7 Ft. Box(1986)
15=Grand Wagoneer 4 Dr.(1984-86)
25=J-10 Truck 7 Ft. Box(1981-84)
26=J10 Truck 8 Ft. Box(1981-86)
27=J-20 Truck 8 Ft. Box(1981-86)
15=Wagoneer 4 Dr.(1981-83)
75=Wagoneer 4WD-4 Dr.(1984-86)

BODY
CJ=CJ-5, CJ-6, CJ-7, CJ-8, Scrambler(1981-86)
MJ=Comanche Pickup(1986)

STYLES
SJ=Wagoneer(1981-83), Grand Wagoneer(1984-86), Cherokee(1981-83), J-10, J-20(1981-86)
XJ=Wagoneer(1984-86), Cherokee(1984-86)

AR = Use as Required - = Non Illustrated Part P.A.R. = Paint as Required

« RETURN TO GROUP INDEX

HOOD AND HINGES SJ CHEROKEE, SJ WAGONEER, J10, J20
Figure 23A-6900

81J69 6900

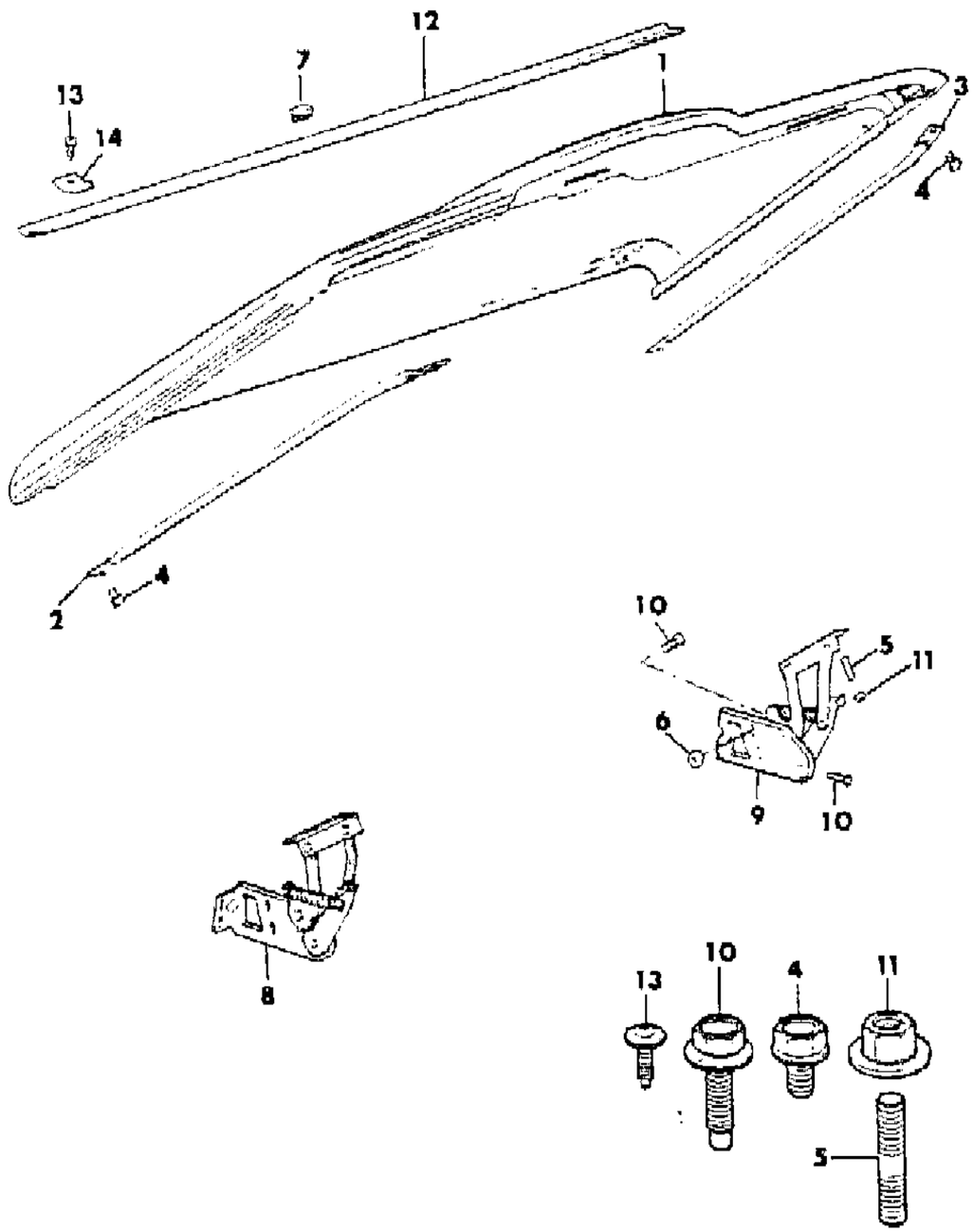

ITEM	PART NUMBER	QTY	BODY	MODEL	DESCRIPTION
1					HOOD
	J575 8030	1			1981-85
	J575 8030	1		15	1986: P.A.R.
	J575 8030	1		25,26,2	1986
2	J098 5174	1			CROSSMEMBER
3	J098 5173	1			CROSSMEMBER
4	J400 3915	8			SCREW
5	J095 8166	4			STUD
6	J400 4866	4			NUT
7	J096 4703	1			BUMPER, Hood
8	J095 6964	1			HINGE, Hood, Right
9	J095 6963	1			HINGE, Hood, Left
10	J400 4455	AR			SCREW
11	J400 4866	AR			NUT
12	J545 9613	1			WEATHERSTRIP
13	J400 5690	AR			SCREW
14	J090 8834	4			CLAMP

MODEL CODES

16=Cherokee 2 Dr.(1981-83)
17=Cherokee 2 Dr.(1981-83)
73=Cherokee 2WD-2 Dr.(1984-86)
74=Cherokee 2WD-4 Dr.(1984-86)
18=Cherokee 4 Dr.(1981-83)
77=Cherokee 4WD-2 Dr.(1984-86)
78=Cherokee 4WD-4 Dr.(1984-86)
85=CJ-5 (1981-83)
86=CJ-6(1981)
87=CJ-7(1981-86)
88=CJ-8, Scrambler(1981-86)
64=Comanche 2WD-6 Ft. Box(1986)
66=Comanche 2WD-7 Ft. Box(1986)
63=Comanche 4WD-6 Ft. Box(1986)
65=Comanche 4WD-7 Ft. Box(1986)
15=Grand Wagoneer 4 Dr.(1984-86)
25=J-10 Truck 7 Ft. Box(1981-84)
26=J10 Truck 8 Ft. Box(1981-86)
27=J-20 Truck 8 Ft. Box(1981-86)
15=Wagoneer 4 Dr.(1981-83)
75=Wagoneer 4WD-4 Dr.(1984-86)

BODY
CJ=CJ-5, CJ-6, CJ-7, CJ-8, Scrambler(1981-86)
MJ=Comanche Pickup(1986)

STYLES
SJ=Wagoneer(1981-83), Grand Wagoneer(1984-86), Cherokee(1981-83), J-10, J-20(1981-86)
XJ=Wagoneer(1984-86), Cherokee(1984-86)

AR = Use as Required - = Non Illustrated Part P.A.R. = Paint as Required

« RETURN TO GROUP INDEX

LOCK AND RELEASE, HOOD SJ CHEROKEE, SJ WAGONEER, J10, J20
Figure 23A-7000

81J69 7000

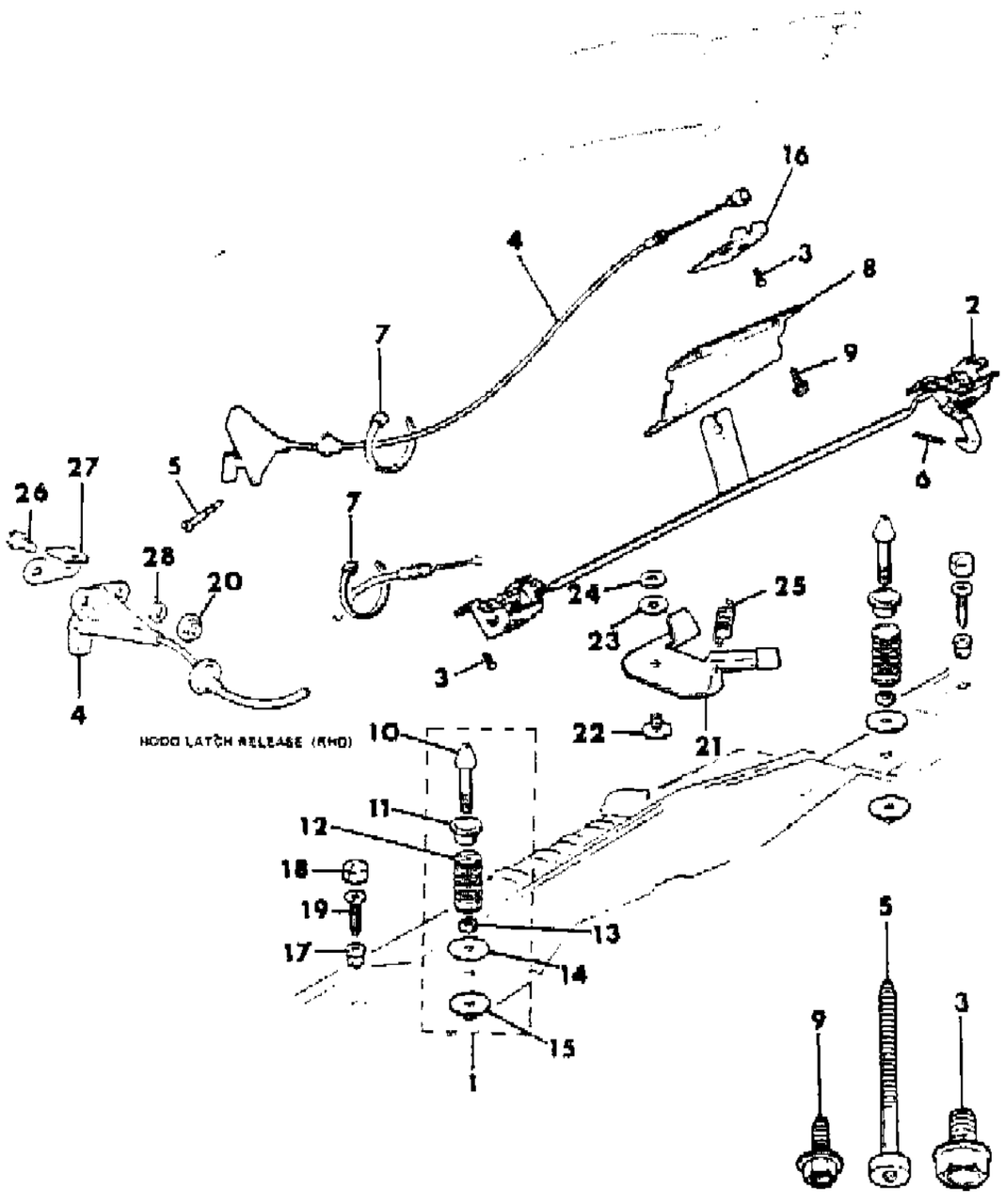

ITEM	PART NUMBER	QTY	BODY	MODEL	DESCRIPTION
1	J095 6418	2			LOCK ASSEMBLY, Hood
2	J575 8026	1			LOCK ASSEMBLY, Hood
3	J400 3915	AR			SCREW
4					CABLE, Hood Release
	J575 8027	1			Without Right Hand Drive
	J805 1618	1			With Right Hand Drive, EXPORT
5	J400 6840	2			SCREW
6					SPRING
	J096 1968	1			Without Right Hand Drive
	J097 2970	1			With Right Hand Drive, EXPORT
7	J322 3227	2			STRAP
8	J575 8029	1			SHIELD
9	J400 5466	2			SCREW
10	J096 3338	2			LOCK
11	J096 3339	2			RETAINER
12	J096 3336	2			SPRING
13	S012 4934	2			NUT
14	J096 6112	2			WASHER
15	J096 3337	2			NUT
16	J575 8028	1			BRACKET
17	J095 8557	2			NUT
18	J095 8556	2			BUMPER, Hood
19	J096 0139	2			SCREW
20	J941 6918	2			NUT, Right Hand Drive, EXPORT
21	J575 1067	1			HANDLE
22	J095 7717	1			BOLT
23	J095 8649	1			WASHER
24					WASHER
	J361 3467	1			Nylon
	J066 4596	1			Plain, .34"ID
	J013 1016	1			Plain, .65"ID
25	J546 2757	1			SPRING
26	J942 3777	2			SCREW, Right Hand Drive, EXPORT
27	J805 1767	1			BRACKET, Right Hand Drive, EXPORT
28	J014 7579	2			WASHER

MODEL CODES

16=Cherokee 2 Dr.(1981-83)
17=Cherokee 2 Dr.(1981-83)
73=Cherokee 2WD-2 Dr.(1984-86)
74=Cherokee 2WD-4 Dr.(1984-86)
18=Cherokee 4 Dr.(1981-83)
77=Cherokee 4WD-2 Dr.(1984-86)
78=Cherokee 4WD-4 Dr.(1984-86)
85=CJ-5 (1981-83)
86=CJ-6(1981)
87=CJ-7(1981-86)
88=CJ-8, Scrambler(1981-86)
64=Comanche 2WD-6 Ft. Box(1986)
66=Comanche 2WD-7 Ft. Box(1986)
63=Comanche 4WD-6 Ft. Box(1986)
65=Comanche 4WD-7 Ft. Box(1986)
15=Grand Wagoneer 4 Dr.(1984-86)
25=J-10 Truck 7 Ft. Box(1981-84)
26=J10 Truck 8 Ft. Box(1981-86)
27=J-20 Truck 8 Ft. Box(1981-86)
15=Wagoneer 4 Dr.(1981-83)
75=Wagoneer 4WD-4 Dr.(1984-86)

BODY
CJ=CJ-5, CJ-6, CJ-7, CJ-8, Scrambler(1981-86)
MJ=Comanche Pickup(1986)

STYLES
SJ=Wagoneer(1981-83), Grand Wagoneer(1984-86), Cherokee(1981-83), J-10, J-20(1981-86)
XJ=Wagoneer(1984-86), Cherokee(1984-86)

AR = Use as Required - = Non Illustrated Part P.A.R. = Paint as Required

« RETURN TO GROUP INDEX

PANELS, COWL AND DASH SJ CHEROKEE, SJ WAGONEER, J10, J20
Figure 23A-7100

81J69 7100

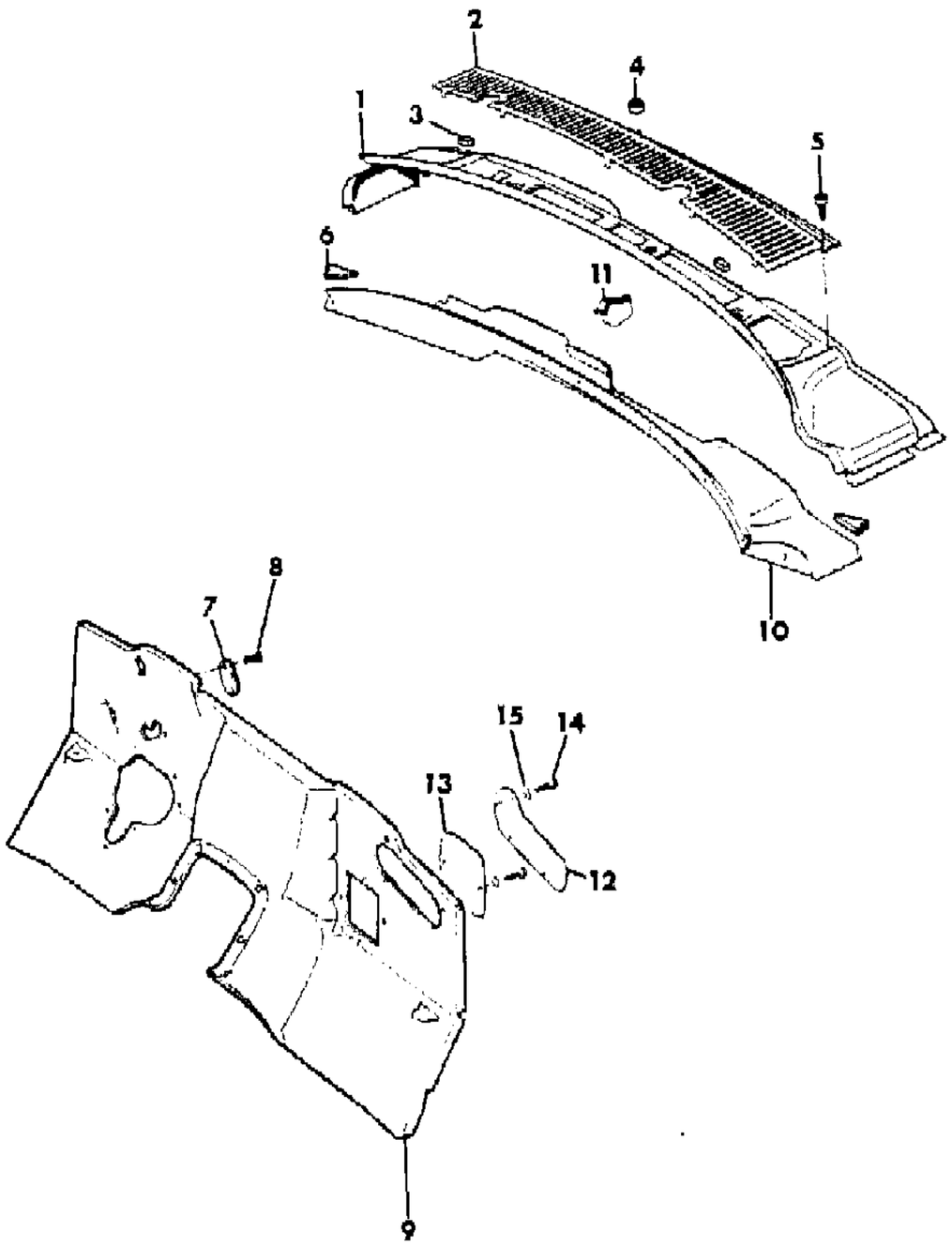

ITEM	PART NUMBER	QTY	BODY	MODEL	DESCRIPTION
1					PANEL, Cowl Top
	J805 1266	1			Right Hand Drive
	J545 1063	1			Left Hand Drive
2					GRILLE, Cowl Top
	J805 0446	1			Right Hand Drive, Australian Design Rules
	J095 2573	1			Without Right Hand Drive, Australian Design Rules
3	J095 9759	9			SPACER
4	J095 9738	3			SPACER
5	J400 5690	7			SCREW
6	J545 7194	2			SPACER
7	J535 1625	1			COVER
8	S045 1824	2			SCREW
9					PANEL, Dash
	J575 8238	1			1981: Left Hand Drive
	J575 3512	1			1982-85: Left Hand Drive
	5505 2600	1			1986: Left Hand Drive
	J805 0480	1			1982-86: Right Hand Drive
10					PANEL, Cowl
	J545 4966	1			1981: Without EXPORT
	J575 2844	1			1981: With EXPORT
	J575 2844	1			1982-86: Left Hand Drive
	9500 0033	1			1982-86: Right Hand Drive
11	J098 1310	1			SUPPORT
12	J095 9734	1			COVER
13	J095 9737	1			COVER
14	S014 9501	8			SCREW
15	J012 0380	8			WASHER

MODEL CODES

16=Cherokee 2 Dr.(1981-83)	78=Cherokee 4WD-4 Dr.(1984-86)	64=Comanche 2WD-6 Ft. Box(1986)	25=J-10 Truck 7 Ft. Box(1981-84)
17=Cherokee 2 Dr.(1981-83)	85=CJ-5 (1981-83)	66=Comanche 2WD-7 Ft. Box(1986)	26=J10 Truck 8 Ft. Box(1981-86)
73=Cherokee 2WD-2 Dr.(1984-86)	86=CJ-6(1981)	63=Comanche 4WD-6 Ft. Box(1986)	27=J-20 Truck 8 Ft. Box(1981-86)
74=Cherokee 2WD-4 Dr.(1984-86)	87=CJ-7(1981-86)	65=Comanche 4WD-7 Ft. Box(1986)	15=Wagoneer 4 Dr.(1981-83)
18=Cherokee 4 Dr.(1981-83)	88=CJ-8, Scrambler(1981-86)	15=Grand Wagoneer 4 Dr.(1984-86)	75=Wagoneer 4WD-4 Dr.(1984-86)
77=Cherokee 4WD-2 Dr.(1984-86)			

BODY
CJ=CJ-5, CJ-6, CJ-7, CJ-8, Scrambler(1981-86)
MJ=Comanche Pickup(1986)

STYLES
SJ=Wagoneer(1981-83), Grand Wagoneer(1984-86), Cherokee(1981-83), J-10, J-20(1981-86)
XJ=Wagoneer(1984-86), Cherokee(1984-86)

AR = Use as Required - = Non Illustrated Part P.A.R. = Paint as Required

« RETURN TO GROUP INDEX

MIRROR, INSIDE REAR VIEW SJ CHEROKEE, SJ WAGONEER, J10, J20
Figure 23A-7200

81J69 7200

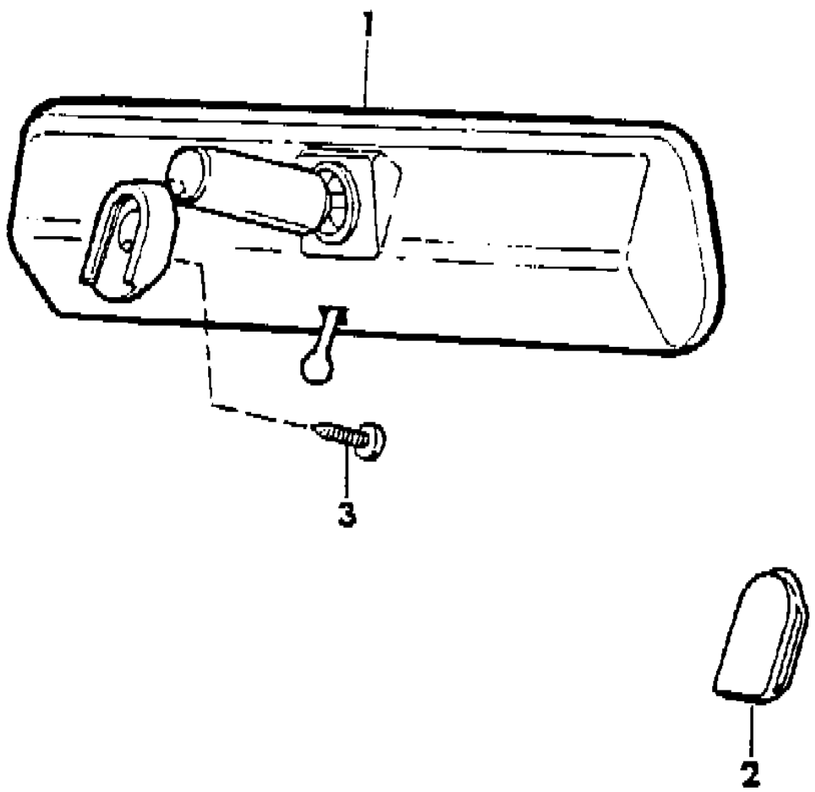

ITEM	PART NUMBER	QTY	BODY	MODEL	DESCRIPTION
1					MIRROR, Inside Rear View
	5500 9783	1			12" Wide
	3500 7638	1			10" Wide
	J575 6124	1			EXPORT
2	J365 7374	1			SUPPORT, Inside Rear View Mirror Mounting (A)
	J813 3768	1			MOUNTING PACKAGE, Mirror ***
3	J400 5766	1			SCREW

(A) When Installing a Mirror Support, use Locktite #312 Adhesive and the Accelerator for Locktite #312. (c) End of decal is open

MODEL CODES

16=Cherokee 2 Dr.(1981-83)
17=Cherokee 2 Dr.(1981-83)
73=Cherokee 2WD-2 Dr.(1984-86)
74=Cherokee 2WD-4 Dr.(1984-86)
18=Cherokee 4 Dr.(1981-83)
77=Cherokee 4WD-2 Dr.(1984-86)
78=Cherokee 4WD-4 Dr.(1984-86)
85=CJ-5 (1981-83)
86=CJ-6(1981)
87=CJ-7(1981-86)
88=CJ-8, Scrambler(1981-86)
64=Comanche 2WD-6 Ft. Box(1986)
66=Comanche 2WD-7 Ft. Box(1986)
63=Comanche 4WD-6 Ft. Box(1986)
65=Comanche 4WD-7 Ft. Box(1986)
15=Grand Wagoneer 4 Dr.(1984-86)
25=J-10 Truck 7 Ft. Box(1981-84)
26=J10 Truck 8 Ft. Box(1981-86)
27=J-20 Truck 8 Ft. Box(1981-86)
15=Wagoneer 4 Dr.(1981-83)
75=Wagoneer 4WD-4 Dr.(1984-86)

BODY
CJ=CJ-5, CJ-6, CJ-7, CJ-8, Scrambler(1981-86)
MJ=Comanche Pickup(1986)

STYLES
SJ=Wagoneer(1981-83), Grand Wagoneer(1984-86), Cherokee(1981-83), J-10, J-20(1981-86)
XJ=Wagoneer(1984-86), Cherokee(1984-86)

AR = Use as Required - = Non Illustrated Part P.A.R. = Paint as Required

« RETURN TO GROUP INDEX

PANELS, BODY SIDE 4 DOOR XJ CHEROKEE, XJ WAGONEER
Figure 23A-4300

81J69 7300

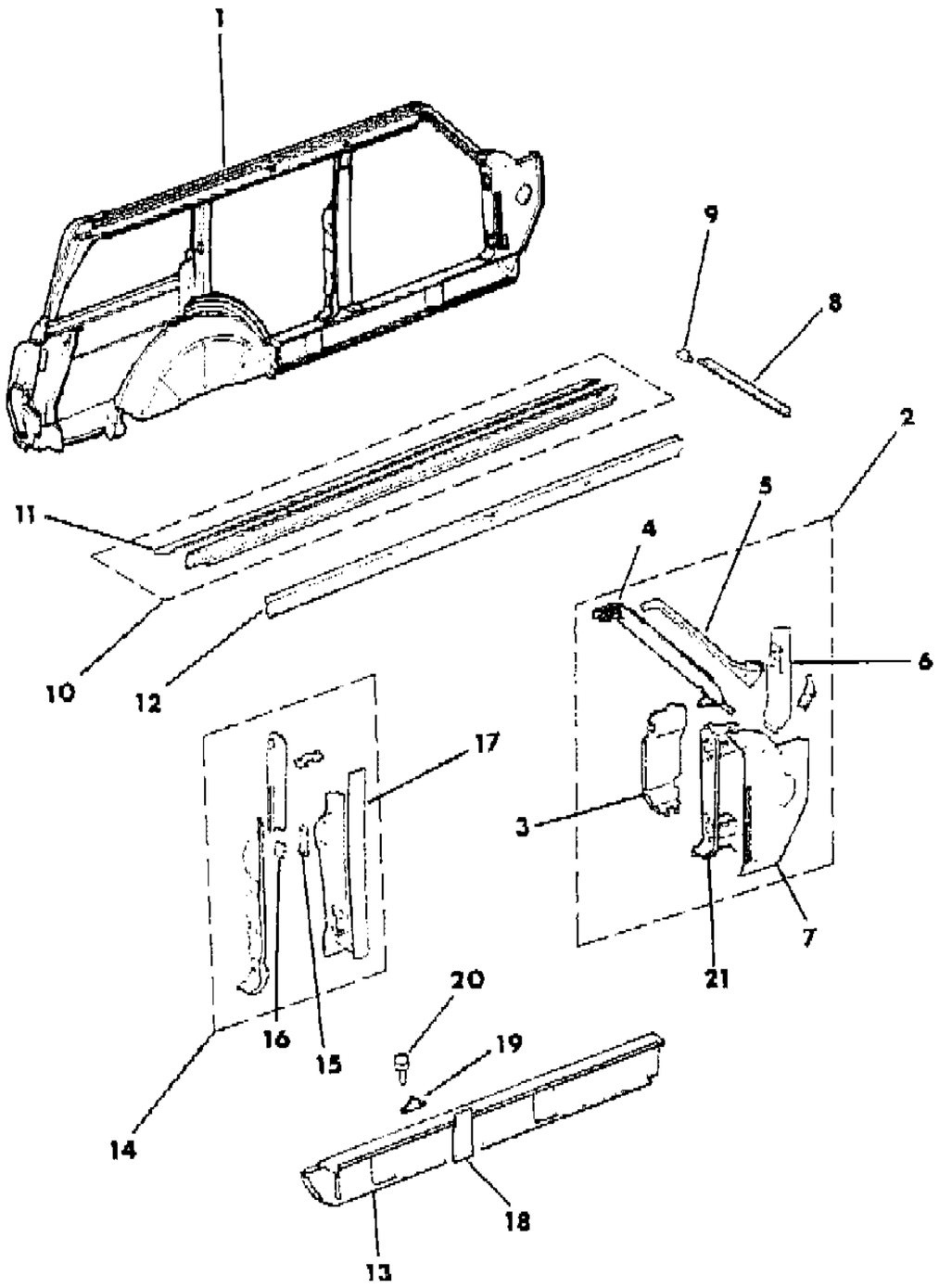

ITEM	PART NUMBER	QTY	BODY	MODEL	DESCRIPTION
1					PANEL, Side
	J575 7498	1		15	1981-83: Right, With "Wrap Around" Taillamps
	J576 1265	1		15	1981-83: Left, With "Wrap Around" Taillamps
	J575 8000	1		18	1981-83: Right
	J576 1267	1		18	1981-83: Left
	J576 4252-3	1		15	1983-86: With Separate Rear Side Marker Lamps
2					PILLAR, Hinge
	J575 7492	1			RIght
	J575 8265	1			1981: Left
	J575 7493	1			1982-86: Left
3	J813 3140-1	1			PANEL, Cowl Side
4					PILLAR, Body
	J095 6778	1			Right
	J095 6777	1			Left
5					REINFORCEMENT, Pillar
	J095 6548	1			Right
	J095 6643	1			Left
6					PANEL, Cowl Side
	J095 7468	1			Right
	J545 0135	1			Left
7					PANEL, Inner
	J575 1926	1			Right
	J575 8266	1			1981: Left
	J575 0033	1			1982-86: Left
8					MOULDING, Drip
	J096 8210	1			Right
	J096 8209	1			Left
9	J096 8201	2			CAP, Moulding
10					RAIL, Roof
	J096 5552	1			Right
	J096 5551	1			Left
11					MOULDING, Drip
	J096 5540	1			Right
	J096 5539	1			Left
12					MOULDING, Drip
	J545 4864	1			Right
	J546 1047	1			Left
13					PANEL, Rocker
	J546 5046	1			Right

MODEL CODES

16=Cherokee 2 Dr.(1981-83)	78=Cherokee 4WD-4 Dr.(1984-86)	64=Comanche 2WD-6 Ft. Box(1986)	25=J-10 Truck 7 Ft. Box(1981-84)
17=Cherokee 2 Dr.(1981-83)	85=CJ-5 (1981-83)	66=Comanche 2WD-7 Ft. Box(1986)	26=J10 Truck 8 Ft. Box(1981-86)
73=Cherokee 2WD-2 Dr.(1984-86)	86=CJ-6(1981)	63=Comanche 4WD-6 Ft. Box(1986)	27=J-20 Truck 8 Ft. Box(1981-86)
74=Cherokee 2WD-4 Dr.(1984-86)	87=CJ-7(1981-86)	65=Comanche 4WD-7 Ft. Box(1986)	15=Wagoneer 4 Dr.(1981-83)
18=Cherokee 4 Dr.(1981-83)	88=CJ-8, Scrambler(1981-86)	15=Grand Wagoneer 4 Dr.(1984-86)	75=Wagoneer 4WD-4 Dr.(1984-86)
77=Cherokee 4WD-2 Dr.(1984-86)			

BODY
CJ=CJ-5, CJ-6, CJ-7, CJ-8, Scrambler(1981-86)
MJ=Comanche Pickup(1986)

STYLES
SJ=Wagoneer(1981-83), Grand Wagoneer(1984-86), Cherokee(1981-83), J-10, J-20(1981-86)
XJ=Wagoneer(1984-86), Cherokee(1984-86)

AR = Use as Required - = Non Illustrated Part P.A.R. = Paint as Required

« RETURN TO GROUP INDEX »

PANELS, BODY SIDE 4 DOOR XJ CHEROKEE, XJ WAGONEER
Figure 23A-4300

81J69 7300

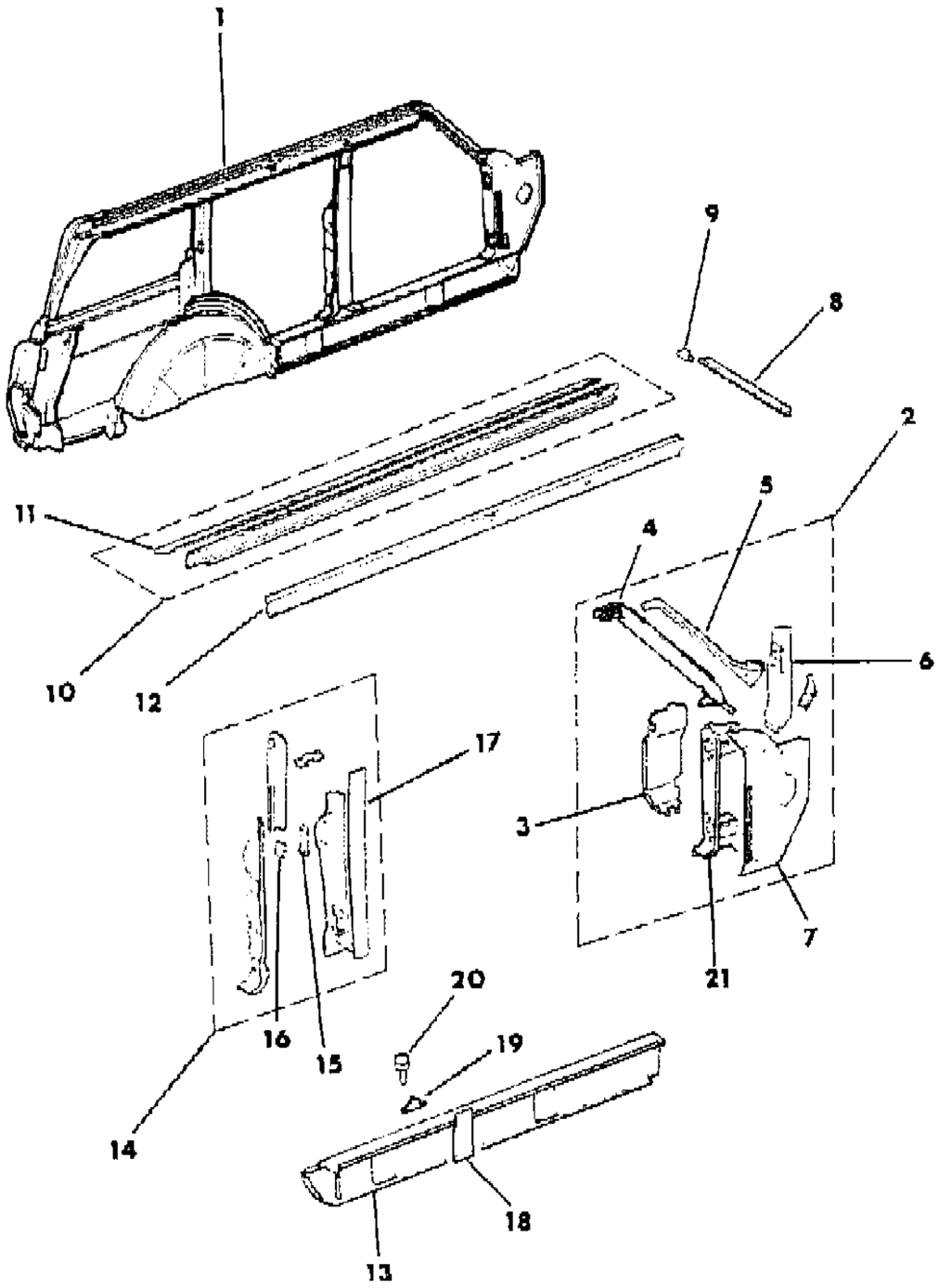

ITEM	PART NUMBER	QTY	BODY	MODEL	DESCRIPTION
	J546 5045	1			Left
14					PILLAR, Center
	J575 1716	1			Right
	J575 1715	1			Left
15	J575 0091	2			PLATE, Tapping
16	J575 0092	2			RETAINER, Tapping Plate
17					PANEL, Lock Pillar
	J545 8188	1			Right
	J546 5781	1			Left
18	J575 6106-7	1			PANEL, Lock Pillar
19					PANEL, Lower Finish
	J095 8568	1			Right
	J095 8567	1			Left
20	J097 4764	2			SCREW
21	J575 7324-5	1			PILLAR, Body

MODEL CODES

16=Cherokee 2 Dr.(1981-83)
17=Cherokee 2 Dr.(1981-83)
73=Cherokee 2WD-2 Dr.(1984-86)
74=Cherokee 2WD-4 Dr.(1984-86)
18=Cherokee 4 Dr.(1981-83)
77=Cherokee 4WD-2 Dr.(1984-86)
78=Cherokee 4WD-4 Dr.(1984-86)
85=CJ-5 (1981-83)
86=CJ-6(1981)
87=CJ-7(1981-86)
88=CJ-8, Scrambler(1981-86)
64=Comanche 2WD-6 Ft. Box(1986)
66=Comanche 2WD-7 Ft. Box(1986)
63=Comanche 4WD-6 Ft. Box(1986)
65=Comanche 4WD-7 Ft. Box(1986)
15=Grand Wagoneer 4 Dr.(1984-86)
25=J-10 Truck 7 Ft. Box(1981-84)
26=J10 Truck 8 Ft. Box(1981-86)
27=J-20 Truck 8 Ft. Box(1981-86)
15=Wagoneer 4 Dr.(1981-83)
75=Wagoneer 4WD-4 Dr.(1984-86)

BODY

CJ=CJ-5, CJ-6, CJ-7, CJ-8, Scrambler(1981-86)
MJ=Comanche Pickup(1986)

STYLES

SJ=Wagoneer(1981-83), Grand Wagoneer(1984-86), Cherokee(1981-83), J-10, J-20(1981-86)
XJ=Wagoneer(1984-86), Cherokee(1984-86)

AR = Use as Required - = Non Illustrated Part P.A.R. = Paint as Required

« RETURN TO GROUP INDEX

PANELS, BODY SIDE 2 DOOR SJ CHEROKEE
Figure 23A-7400

81J69 7400

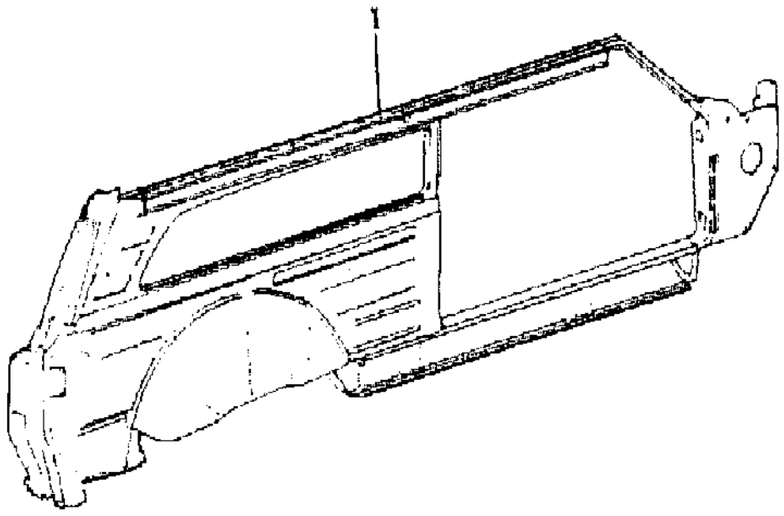

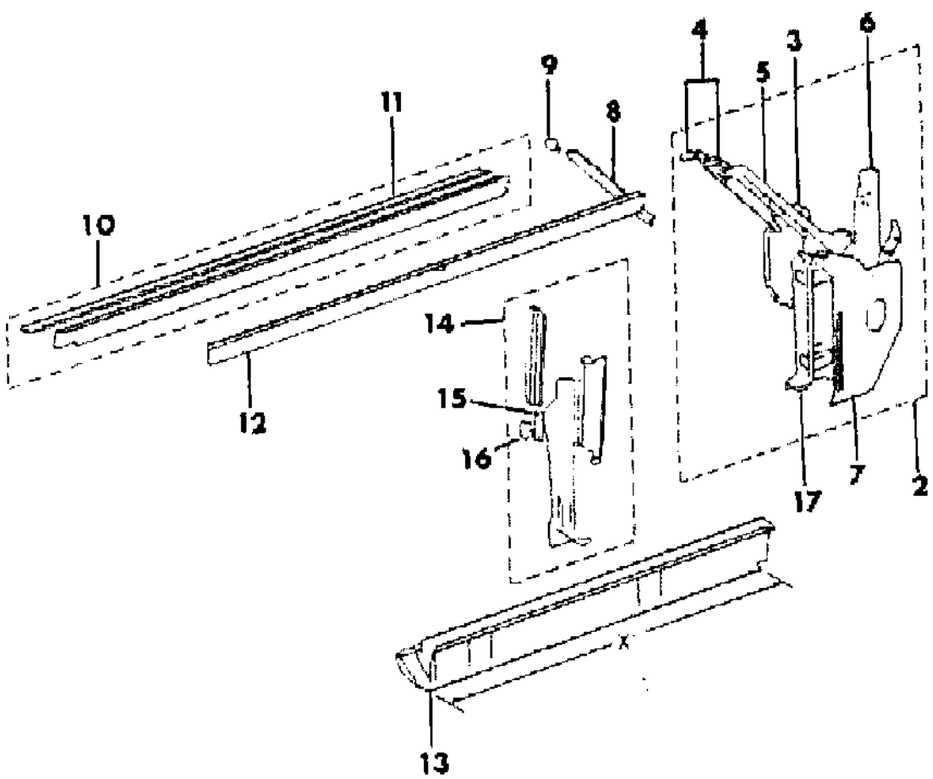

ITEM	PART NUMBER	QTY	BODY	MODEL	DESCRIPTION
1					PANEL, Side
	J575 7494	1		16	Right
	J576 1259	1		16	Left
	J575 7496	1		17	Right
	J576 1261	1		17	Left
2					PILLAR, Hinge
	J575 7492	1			Right
	J575 8265	1			1981: Left
	J575 7493	1			1982-86: Left
3	J813 3140-1	1			PANEL, Cowl Side
4					PILLAR, Body
	J095 6778	1			Right
	J095 6777	1			Left
5					REINFORCEMENT, Pillar
	J095 9548	1			Right
	J095 6643	1			Left
6					PANEL, Cowl Side
	J095 7468	1			Right
	J545 0135	1			Left
7					PANEL, Inner
	J575 1926	1			Right
	J575 8266	1			1981: Left
	J575 0033	1			1982-86: Left
8					MOULDING, Drip
	J096 8210	1			Right
	J096 8209	1			Left
9	J096 8201	2			CAP, Molding
10					RAIL, Roof
	J096 5552	1			Right
	J096 5551	1			Left
11					MOULDING, Drip
	J096 5540	1			Right
	J096 5539	1			Left
12					RAIL, Roof Inner
	J545 4864	1			Right
	J546 1047	1			Left
13					PANEL, Rocker
	J546 5050	1			Right, 67"lg
	J546 5046	1			Right, 70"lg

MODEL CODES

16=Cherokee 2 Dr.(1981-83)
17=Cherokee 2 Dr.(1981-83)
73=Cherokee 2WD-2 Dr.(1984-86)
74=Cherokee 2WD-4 Dr.(1984-86)
18=Cherokee 4 Dr.(1981-83)
77=Cherokee 4WD-2 Dr.(1984-86)
78=Cherokee 4WD-4 Dr.(1984-86)
85=CJ-5 (1981-83)
86=CJ-6(1981)
87=CJ-7(1981-86)
88=CJ-8, Scrambler(1981-86)
64=Comanche 2WD-6 Ft. Box(1986)
66=Comanche 2WD-7 Ft. Box(1986)
63=Comanche 4WD-6 Ft. Box(1986)
65=Comanche 4WD-7 Ft. Box(1986)
15=Grand Wagoneer 4 Dr.(1984-86)
25=J-10 Truck 7 Ft. Box(1981-84)
26=J10 Truck 8 Ft. Box(1981-86)
27=J-20 Truck 8 Ft. Box(1981-86)
15=Wagoneer 4 Dr.(1981-83)
75=Wagoneer 4WD-4 Dr.(1984-86)

BODY
CJ=CJ-5, CJ-6, CJ-7, CJ-8, Scrambler(1981-86)
MJ=Comanche Pickup(1986)

STYLES
SJ=Wagoneer(1981-83), Grand Wagoneer(1984-86), Cherokee(1981-83), J-10, J-20(1981-86)
XJ=Wagoneer(1984-86), Cherokee(1984-86)

AR = Use as Required - = Non Illustrated Part P.A.R. = Paint as Required

PANELS, BODY SIDE 2 DOOR SJ CHEROKEE
Figure 23A-7400

81J69 7400

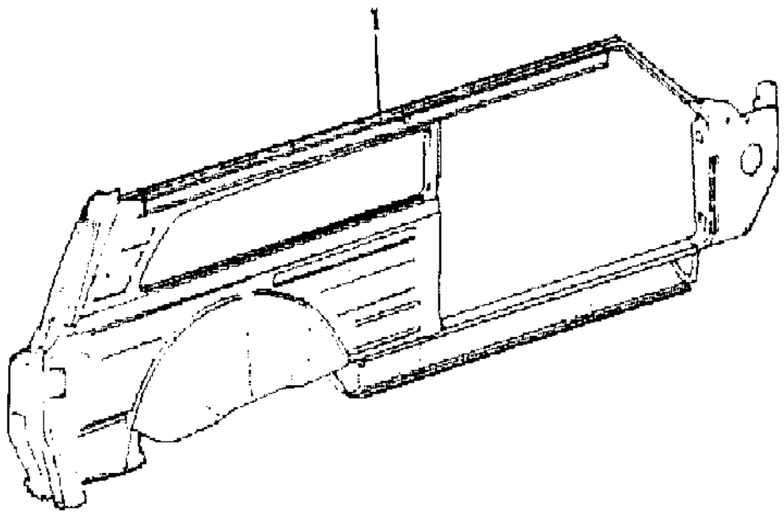

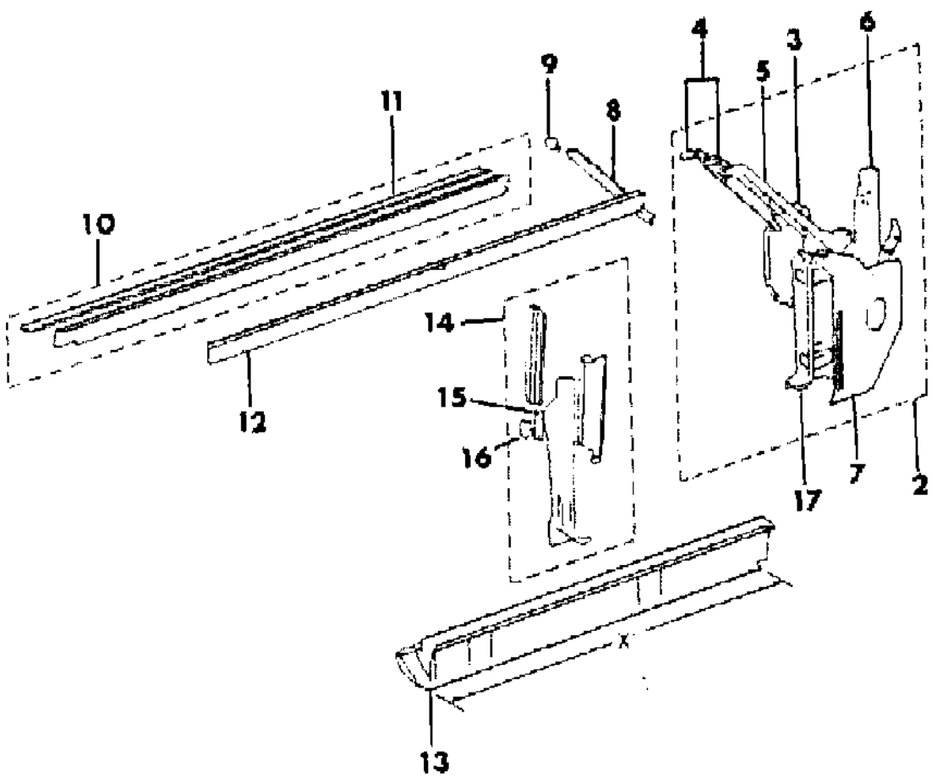

ITEM	PART NUMBER	QTY	BODY	MODEL	DESCRIPTION
	J546 5049	1			Left, 67"lg
	J546 5045	1			Left, 70"lg
14					PILLAR, Lock
	J575 0121	1			Right
	J575 0113	1			Left
15	J575 0091	2			PLATE, Tapping
16	J575 0092	2			RETAINER, Tapping Plate
17	J575 7324-5	1			PILLAR, Body

MODEL CODES

16=Cherokee 2 Dr.(1981-83)
17=Cherokee 2 Dr.(1981-83)
73=Cherokee 2WD-2 Dr.(1984-86)
74=Cherokee 2WD-4 Dr.(1984-86)
18=Cherokee 4 Dr.(1981-83)
77=Cherokee 4WD-2 Dr.(1984-86)
78=Cherokee 4WD-4 Dr.(1984-86)
85=CJ-5 (1981-83)
86=CJ-6(1981)
87=CJ-7(1981-86)
88=CJ-8, Scrambler(1981-86)
64=Comanche 2WD-6 Ft. Box(1986)
66=Comanche 2WD-7 Ft. Box(1986)
63=Comanche 4WD-6 Ft. Box(1986)
65=Comanche 4WD-7 Ft. Box(1986)
15=Grand Wagoneer 4 Dr.(1984-86)
25=J-10 Truck 7 Ft. Box(1981-84)
26=J10 Truck 8 Ft. Box(1981-86)
27=J-20 Truck 8 Ft. Box(1981-86)
15=Wagoneer 4 Dr.(1981-83)
75=Wagoneer 4WD-4 Dr.(1984-86)

BODY

CJ=CJ-5, CJ-6, CJ-7, CJ-8, Scrambler(1981-86)
MJ=Comanche Pickup(1986)

STYLES

SJ=Wagoneer(1981-83), Grand Wagoneer(1984-86), Cherokee(1981-83), J-10, J-20(1981-86)
XJ=Wagoneer(1984-86), Cherokee(1984-86)

AR = Use as Required - = Non Illustrated Part P.A.R. = Paint as Required

« RETURN TO GROUP INDEX

«

PANELS, REAR QUARTER 4 DOOR SJ CHEROKEE, SJ WAGONEER
Figure 23A-7500

81J69 7500

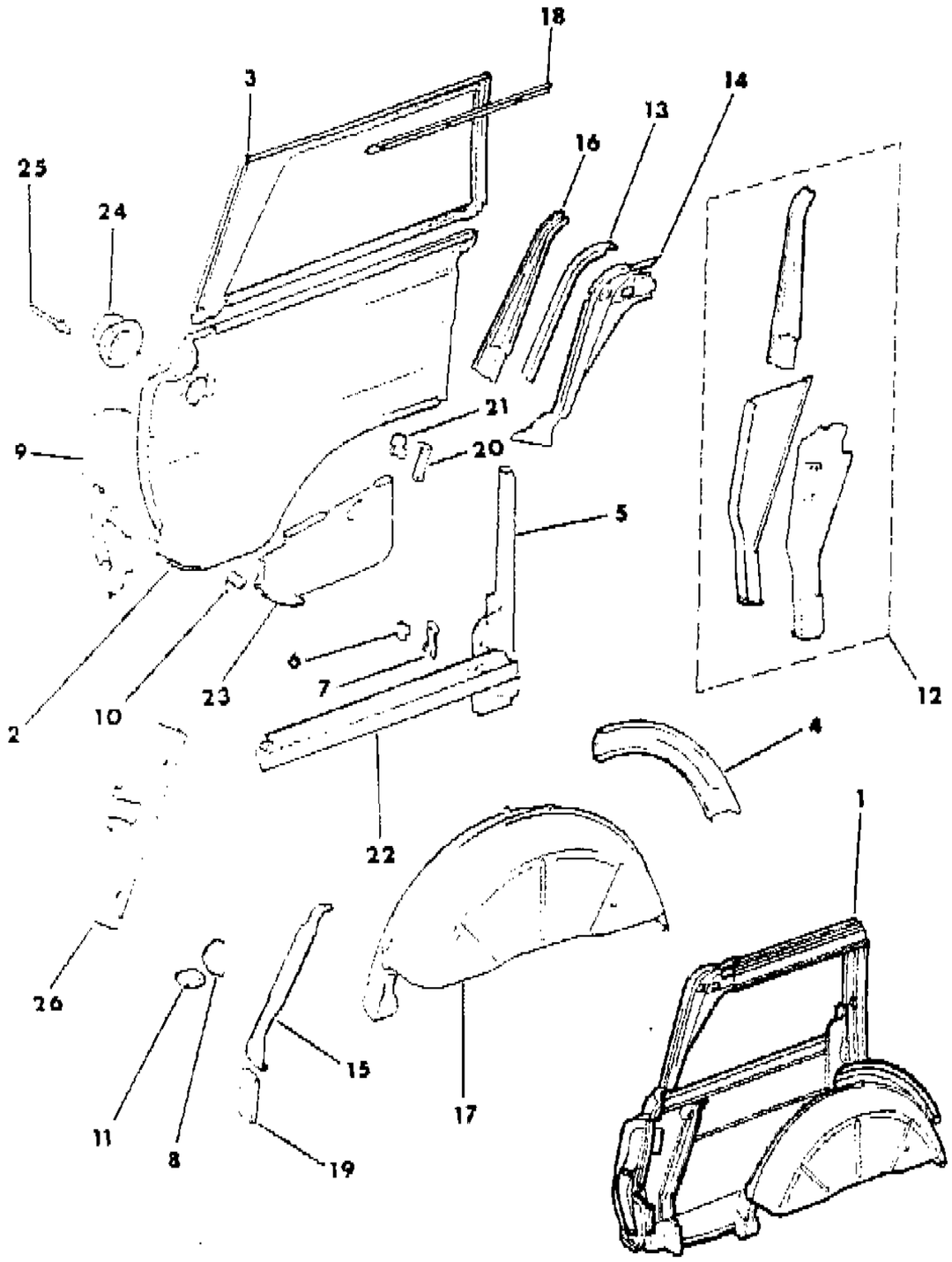

ITEM	PART NUMBER	QTY	BODY	MODEL	DESCRIPTION
1					PANEL ASSEMBLY, Rear Quarter Inner
	J575 0130	1			Right
	J575 1721	1			Left
2					PANEL, Rear Quarter
	J813 3100	1		15	1981-83: Right, With "Wrap Around" Taillamps
	J813 3101	1		15	1981: Left, With "Wrap Around" Taillamps
	J575 8929	1		15	1982-83: Left, With "Wrap Around" Taillamps
	J576 4254-5	1		15	1983-86: With Separate Rear Side Marker Lamps
	J813 3098	1		18	1981-83: Right
	J813 3099	1		18	1981: Left
	J575 8921	1		18	1982-83: Left
3					PANEL, Quarter Upper
	J096 5548	1			Right
	J096 5547	1			Left
4					EXTENSION, Panel
	J095 6688	1			Right
	J095 6687	1			Left
5					PILLAR, Lock
	J575 0133	1			Right
	J575 0127	1			Left
6	J575 0092	2			RETAINER, Tapping Plate
7	J575 0091	2			PLATE, Tapping
8					FILLER, Panel
	J095 6632	1			Right
	J095 6631	1			Left
9					PANEL, Taillamp
	J097 9716	1		15	1981-83: Right, With "Wrap Around" Taillamps
	J097 9715	1		15	1981-83: Left, With "Wrap Around" Taillamps
	J545 0456	1		15	1983-86, Right With Separate Rear Side Marker Lamps
	J545 0455	1		15	1983-86: Left, With Separate Rear Side Marker Lamps
10					BRACKET, Extension
	J096 0162	1			Right
	J096 0161	1			Left
11	J098 1426	2			FILLER
12					PILLAR, Body
	J575 0118	1			Right
	J575 0110	1			Left
13					EXTENSION, Pillar
	J095 9410	1			Right

MODEL CODES

16=Cherokee 2 Dr.(1981-83)	78=Cherokee 4WD-4 Dr.(1984-86)	64=Comanche 2WD-6 Ft. Box(1986)	25=J-10 Truck 7 Ft. Box(1981-84)
17=Cherokee 2 Dr.(1981-83)	85=CJ-5 (1981-83)	66=Comanche 2WD-7 Ft. Box(1986)	26=J10 Truck 8 Ft. Box(1981-86)
73=Cherokee 2WD-2 Dr.(1984-86)	86=CJ-6(1981)	63=Comanche 4WD-6 Ft. Box(1986)	27=J-20 Truck 8 Ft. Box(1981-86)
74=Cherokee 2WD-4 Dr.(1984-86)	87=CJ-7(1981-86)	65=Comanche 4WD-7 Ft. Box(1986)	15=Wagoneer 4 Dr.(1981-83)
18=Cherokee 4 Dr.(1981-83)	88=CJ-8, Scrambler(1981-86)	15=Grand Wagoneer 4 Dr.(1984-86)	75=Wagoneer 4WD-4 Dr.(1984-86)
77=Cherokee 4WD-2 Dr.(1984-86)			

BODY
CJ=CJ-5, CJ-6, CJ-7, CJ-8, Scrambler(1981-86)
MJ=Comanche Pickup(1986)

STYLES
SJ=Wagoneer(1981-83), Grand Wagoneer(1984-86), Cherokee(1981-83), J-10, J-20(1981-86)
XJ=Wagoneer(1984-86), Cherokee(1984-86)

AR = Use as Required - = Non Illustrated Part P.A.R. = Paint as Required

« RETURN TO GROUP INDEX »

PANELS, REAR QUARTER 4 DOOR SJ CHEROKEE, SJ WAGONEER
Figure 23A-7500

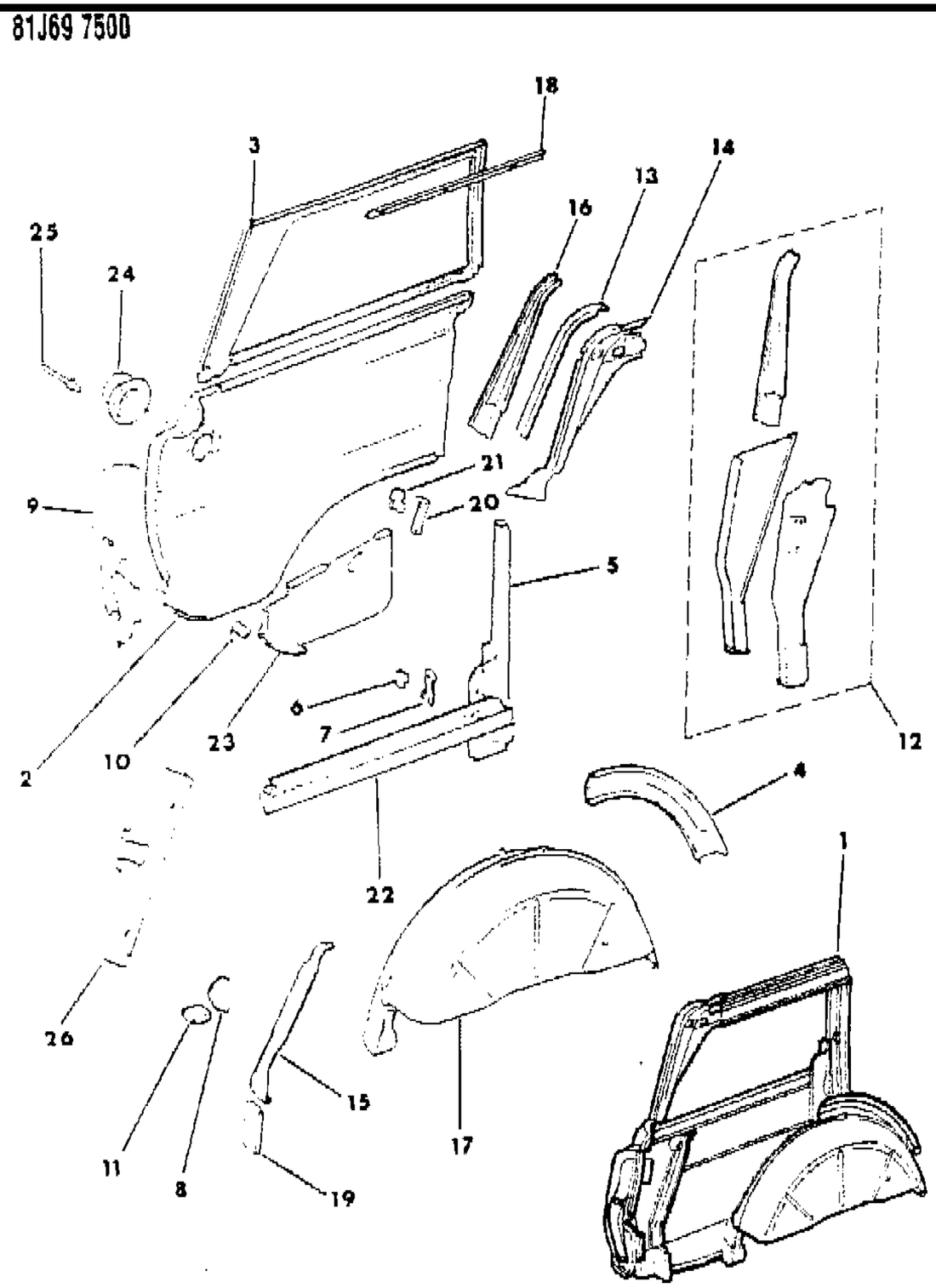

ITEM	PART NUMBER	QTY	BODY	MODEL	DESCRIPTION
	J095 9409	1			Left
14					PILLAR, Body
	J545 1144	1			Right
	J545 1143	1			Left
15		1			PANEL, Side
	J545 1164	1			Right
	J543 1163	1			Left
16					PILLAR, Body
	J095 6650	1			Right
	J095 6649	1			Left
17					PANEL, Wheelhouse
					Without Wide Wheel Option
	J545 1150	1			Right
	J546 4635	1			Left
					With Wide Wheel Option
	J545 7736	1			Right
	J546 4655	1			Left
18					FRAME, Quarter Window
	J095 6670	1			Right
	J095 6669	1			Left
19					PANEL, Side
	J095 8618	1			Right
	J095 8617	1			Left
20	J575 0363	2			PLATE, Tapping
21	J545 2448	2			RETAINER, Tapping Plate
22					FRAME, Window
	J096 0930	1			Right
	J546 4215	1			Left
23					PANEL, Extension
	J095 7702	1			Right
	J546 2799	1			Left
24	J536 3396	1			RETAINER, Filler
25	J400 4962	6			RIVET
26	J576 1914	1			BRACKET, California, 8 Cylinder Engine

MODEL CODES

16=Cherokee 2 Dr.(1981-83)	78=Cherokee 4WD-4 Dr.(1984-86)	64=Comanche 2WD-6 Ft. Box(1986)	25=J-10 Truck 7 Ft. Box(1981-84)
17=Cherokee 2 Dr.(1981-83)	85=CJ-5 (1981-83)	66=Comanche 2WD-7 Ft. Box(1986)	26=J10 Truck 8 Ft. Box(1981-86)
73=Cherokee 2WD-2 Dr.(1984-86)	86=CJ-6(1981)	63=Comanche 4WD-6 Ft. Box(1986)	27=J-20 Truck 8 Ft. Box(1981-86)
74=Cherokee 2WD-4 Dr.(1984-86)	87=CJ-7(1981-86)	65=Comanche 4WD-7 Ft. Box(1986)	15=Wagoneer 4 Dr.(1981-83)
18=Cherokee 4 Dr.(1981-83)	88=CJ-8, Scrambler(1981-86)	15=Grand Wagoneer 4 Dr.(1984-86)	75=Wagoneer 4WD-4 Dr.(1984-86)
77=Cherokee 4WD-2 Dr.(1984-86)			

BODY
CJ=CJ-5, CJ-6, CJ-7, CJ-8, Scrambler(1981-86)
MJ=Comanche Pickup(1986)

STYLES
SJ=Wagoneer(1981-83), Grand Wagoneer(1984-86), Cherokee(1981-83), J-10, J-20(1981-86)
XJ=Wagoneer(1984-86), Cherokee(1984-86)

AR = Use as Required - = Non Illustrated Part P.A.R. = Paint as Required

« RETURN TO GROUP INDEX

PANELS, REAR QUARTER 2 DOOR SJ CHEROKEE
Figure 23A-7600

81J69 7600

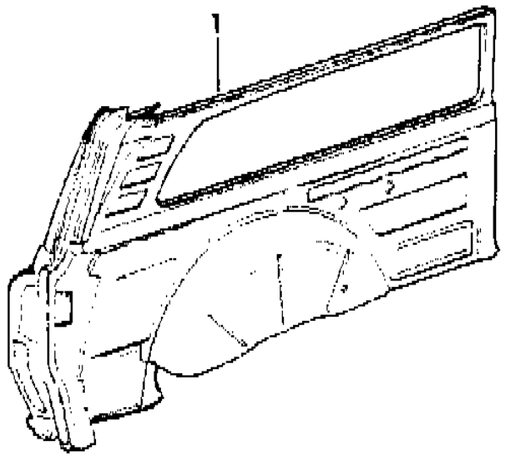

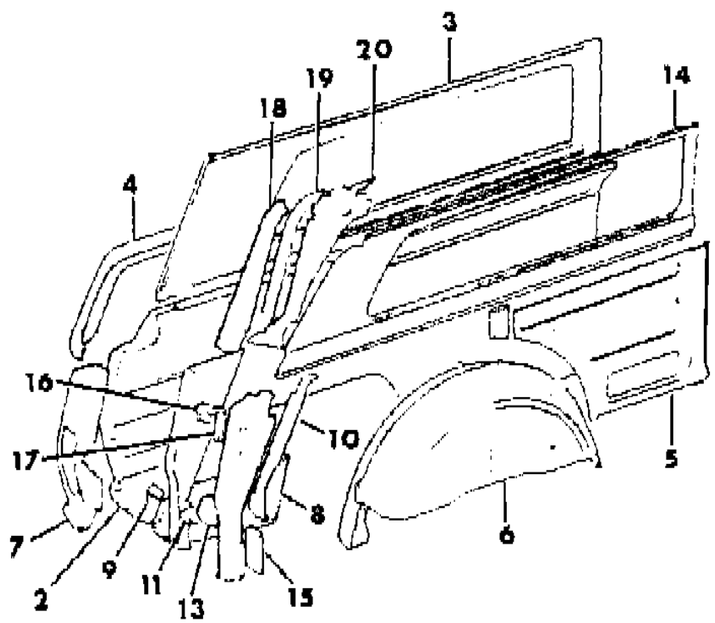

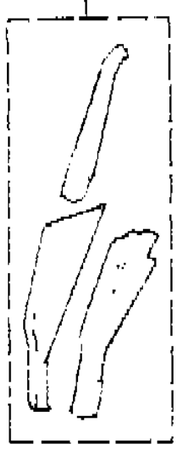

ITEM	PART NUMBER	QTY	BODY	MODEL	DESCRIPTION
1					FRAME, Quarter Window
	J575 6114-5	1		16	
	J575 6122-3	1		17	
2					PANEL, Rear Quarter
	J545 0458	1		16	Right
	J545 7734	1		17	Right
					Left
	J546 3623	1		16	1981
	J575 8919	1		16	1982-86
	J546 3669	1		17	1981
	J576 1263	1		17	1982-86
3					PANEL, Quarter Upper
	J545 0452	1			Right
	J545 0451	1			Left
4					EXTENSION, Fender
	J546 2432	1		17	Right
	J546 2431	1		17	Left
5	J575 6110-1	1			PANEL, Rear Quarter Inner
6					PANEL, Wheelhouse
					Without Wide Wheel Option
	J545 1150	1			Right
	J546 4635	1			Left
					With Wide Wheel Option
	J545 7736	1			Right
	J546 4655	1			Left
7					PANEL, Taillamp
	J545 0456	1			Right
	J545 0455	1			Left
8					PANEL, Extension
	J095 7702	1			Right
	J546 2799	1			Left
9					BRACKET, Extension
	J096 0162	1			Right
	J096 0161	1			Left
10					PANEL, Side
	J545 1164	1			Right
	J545 1163	1			Left
11	J098 1426	2			FILLER
12					PILLAR, Body

MODEL CODES

16=Cherokee 2 Dr.(1981-83)	78=Cherokee 4WD-4 Dr.(1984-86)	64=Comanche 2WD-6 Ft. Box(1986)	25=J-10 Truck 7 Ft. Box(1981-84)
17=Cherokee 2 Dr.(1981-83)	85=CJ-5 (1981-83)	66=Comanche 2WD-7 Ft. Box(1986)	26=J10 Truck 8 Ft. Box(1981-86)
73=Cherokee 2WD-2 Dr.(1984-86)	86=CJ-6(1981)	63=Comanche 4WD-6 Ft. Box(1986)	27=J-20 Truck 8 Ft. Box(1981-86)
74=Cherokee 2WD-4 Dr.(1984-86)	87=CJ-7(1981-86)	65=Comanche 4WD-7 Ft. Box(1986)	15=Wagoneer 4 Dr.(1981-83)
18=Cherokee 4 Dr.(1981-83)	88=CJ-8, Scrambler(1981-86)	15=Grand Wagoneer 4 Dr.(1984-86)	75=Wagoneer 4WD-4 Dr.(1984-86)
77=Cherokee 4WD-2 Dr.(1984-86)			

BODY
CJ=CJ-5, CJ-6, CJ-7, CJ-8, Scrambler(1981-86)
MJ=Comanche Pickup(1986)

STYLES
SJ=Wagoneer(1981-83), Grand Wagoneer(1984-86), Cherokee(1981-83), J-10, J-20(1981-86)
XJ=Wagoneer(1984-86), Cherokee(1984-86)

AR = Use as Required - = Non Illustrated Part P.A.R. = Paint as Required

« RETURN TO GROUP INDEX »

PANELS, REAR QUARTER 2 DOOR SJ CHEROKEE
Figure 23A-7600

81J69 7600

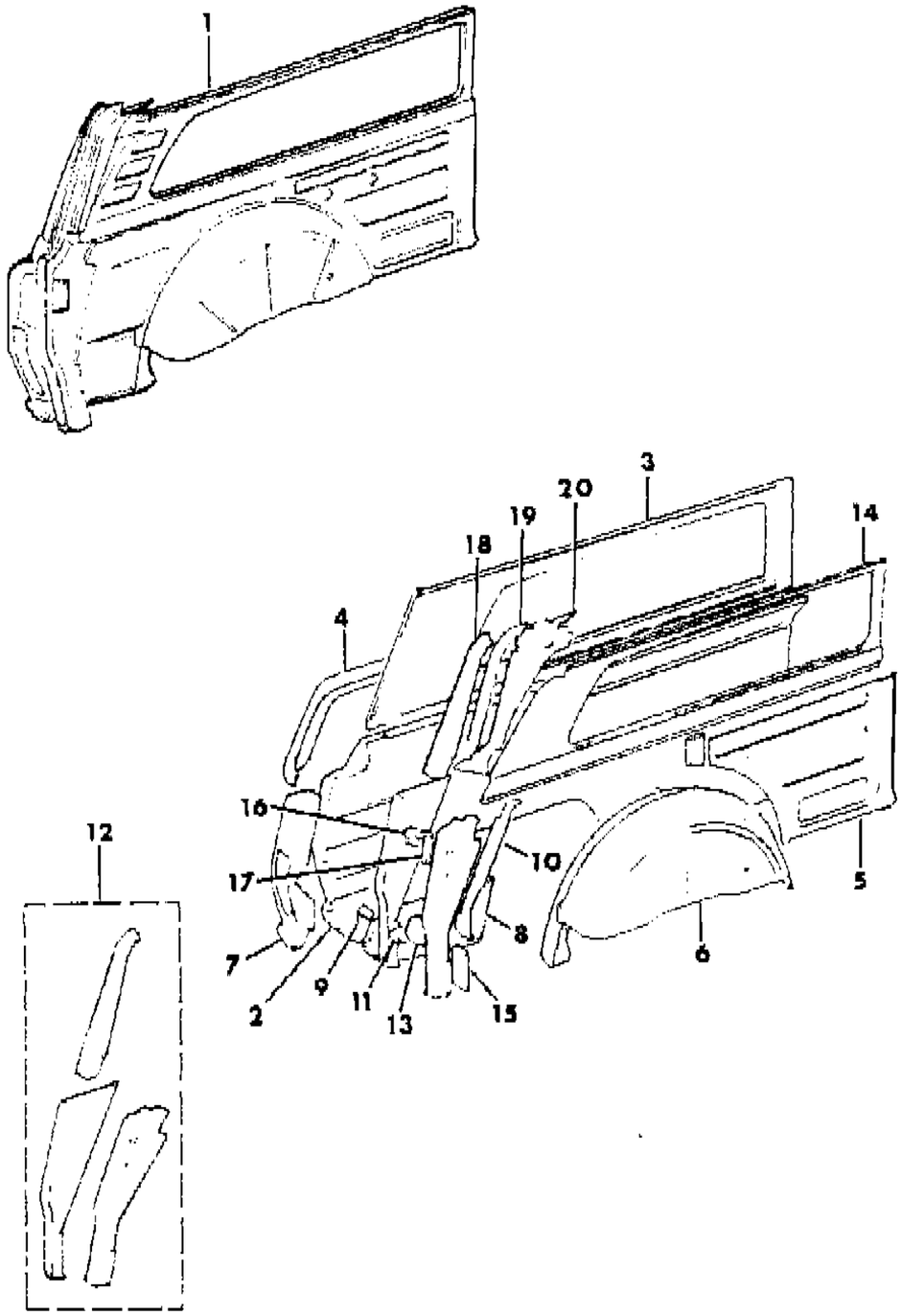

ITEM	PART NUMBER	QTY	BODY	MODEL	DESCRIPTION
	J575 0118	1			Right
	J575 0110	1			Left
13					FILLER, Panel
	J095 6632	1			Right
	J095 6631	1			Left
14					PANEL, Side Upper
	J545 6522	1			Right
	J546 3936	1			Left
15					PANEL, Side
	J095 8618	1			Right
	J095 8617	1			Left
16	J575 0363	2			PLATE, Tapping
17	J545 2448	2			RETAINER, Tapping Plate
18					PILLAR, Body
	J095 6650	1			Right
	J095 6649	1			Left
19					EXTENSION, Pillar
	J095 9410	1			Right
	J095 9409	1			Left
20					PILLAR, Body
	J545 1144	1			Right
	J545 1143	1			Left

MODEL CODES

16=Cherokee 2 Dr.(1981-83)	78=Cherokee 4WD-4 Dr.(1984-86)	64=Comanche 2WD-6 Ft. Box(1986)	25=J-10 Truck 7 Ft. Box(1981-84)
17=Cherokee 2 Dr.(1981-83)	85=CJ-5 (1981-83)	66=Comanche 2WD-7 Ft. Box(1986)	26=J10 Truck 8 Ft. Box(1981-86)
73=Cherokee 2WD-2 Dr.(1984-86)	86=CJ-6(1981)	63=Comanche 4WD-6 Ft. Box(1986)	27=J-20 Truck 8 Ft. Box(1981-86)
74=Cherokee 2WD-4 Dr.(1984-86)	87=CJ-7(1981-86)	65=Comanche 4WD-7 Ft. Box(1986)	15=Wagoneer 4 Dr.(1981-83)
18=Cherokee 4 Dr.(1981-83)	88=CJ-8, Scrambler(1981-86)	15=Grand Wagoneer 4 Dr.(1984-86)	75=Wagoneer 4WD-4 Dr.(1984-86)
77=Cherokee 4WD-2 Dr.(1984-86)			

BODY
CJ=CJ-5, CJ-6, CJ-7, CJ-8, Scrambler(1981-86)
MJ=Comanche Pickup(1986)

STYLES
SJ=Wagoneer(1981-83), Grand Wagoneer(1984-86), Cherokee(1981-83), J-10, J-20(1981-86)
XJ=Wagoneer(1984-86), Cherokee(1984-86)

AR = Use as Required - = Non Illustrated Part P.A.R. = Paint as Required

« RETURN TO GROUP INDEX

TAILGATE AND HINGES SJ CHEROKEE, SJ WAGONEER
Figure 23A-7700

81J69 7700

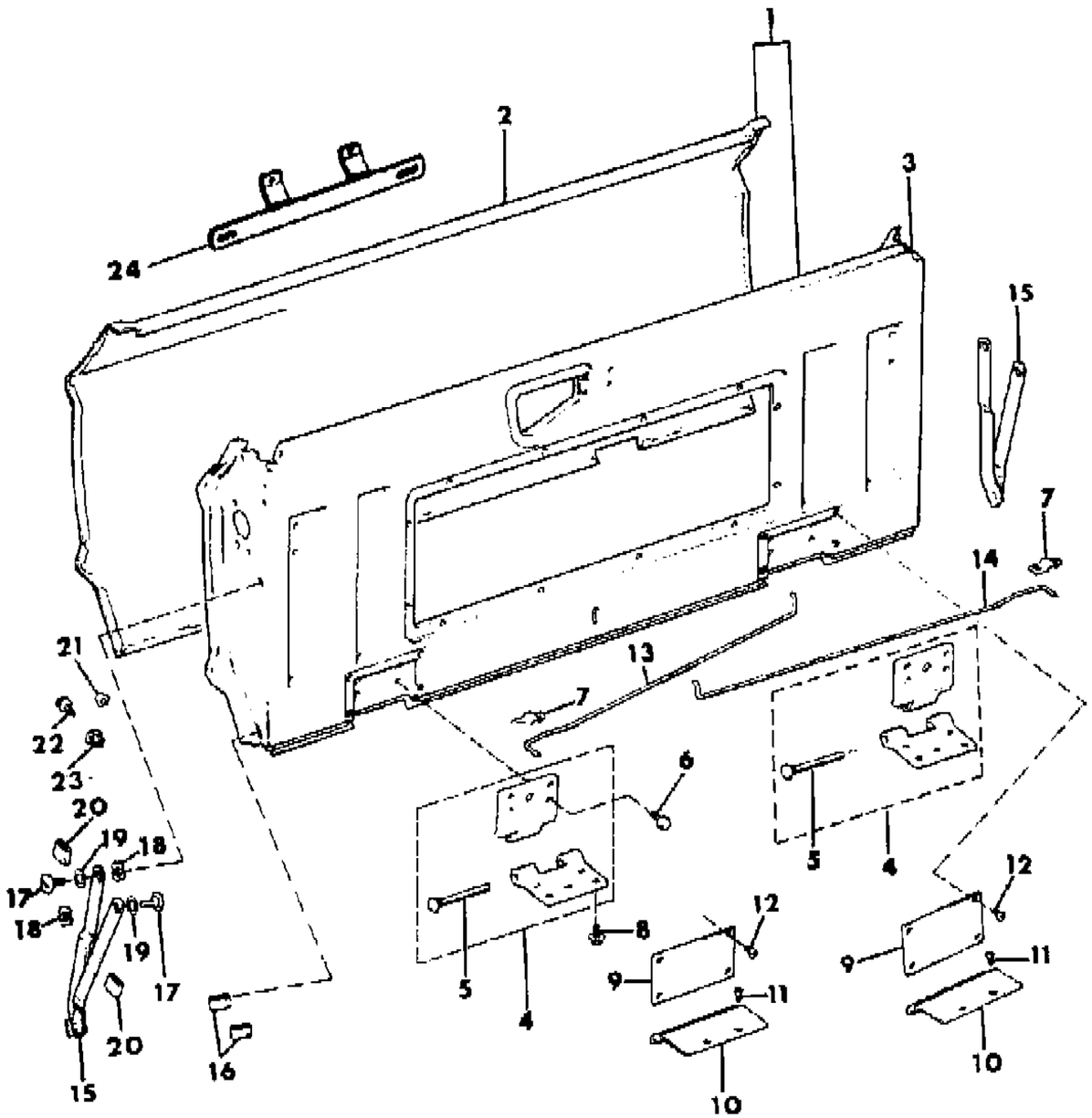

ITEM	PART NUMBER	QTY	BODY	MODEL	DESCRIPTION
1	J813 0620	1			TAILGATE
2	J545 1403	1			PANEL, Outer
3	J575 0144	1			PANEL, Inner
4	J575 1937	2			HINGE, Tailgate
5	J576 4063	2			PIN, Hinge
6	J400 3069	8			BOLT
7	J575 8338-9	1			BRACKET, Rod
8	J400 4455	8			BOLT
9	J545 1413	2			COVER, Hinge
10	J545 1437	2			COVER, Hinge
11	S016 3470	8			SCREW
12	J400 1477	8			SCREW
13	J545 1577	1			ROD, Hinge Torque-Left
14	J545 1578	1			ROD, Hinge Torque, Right
15					ARM, Tailgate Support
	J576 5514	1			Right
	J574 5513	1			Left
16	J096 4504	1			BUMPER
17	J095 7717	4			BOLT
18	J096 6359	4			WASHER
19	J095 8649	4			WASHER, Spring
20	J096 1095	4			SLEEVE
21	J400 3508	1			BUMPER, License
22	J400 5466	2			SCREW
23	J400 0141	2			NUT
24	J575 2653	1		16,17,1	BRACKET, License, EXPORT, Australian Design Rules, Knocked-down form for local assembly, CKD, Economic Commission of Europe.

MODEL CODES

16=Cherokee 2 Dr.(1981-83)
17=Cherokee 2 Dr.(1981-83)
73=Cherokee 2WD-2 Dr.(1984-86)
74=Cherokee 2WD-4 Dr.(1984-86)
18=Cherokee 4 Dr.(1981-83)
77=Cherokee 4WD-2 Dr.(1984-86)
78=Cherokee 4WD-4 Dr.(1984-86)
85=CJ-5 (1981-83)
86=CJ-6(1981)
87=CJ-7(1981-86)
88=CJ-8, Scrambler(1981-86)
64=Comanche 2WD-6 Ft. Box(1986)
66=Comanche 2WD-7 Ft. Box(1986)
63=Comanche 4WD-6 Ft. Box(1986)
65=Comanche 4WD-7 Ft. Box(1986)
15=Grand Wagoneer 4 Dr.(1984-86)
25=J-10 Truck 7 Ft. Box(1981-84)
26=J10 Truck 8 Ft. Box(1981-86)
27=J-20 Truck 8 Ft. Box(1981-86)
15=Wagoneer 4 Dr.(1981-83)
75=Wagoneer 4WD-4 Dr.(1984-86)

BODY
CJ=CJ-5, CJ-6, CJ-7, CJ-8, Scrambler(1981-86)
MJ=Comanche Pickup(1986)

STYLES
SJ=Wagoneer(1981-83), Grand Wagoneer(1984-86), Cherokee(1981-83), J-10, J-20(1981-86)
XJ=Wagoneer(1984-86), Cherokee(1984-86)

AR = Use as Required - = Non Illustrated Part P.A.R. = Paint as Required

« RETURN TO GROUP INDEX

LATCHES, TAILGATE SJ CHEROKEE, SJ WAGONEER
Figure 23A-7800

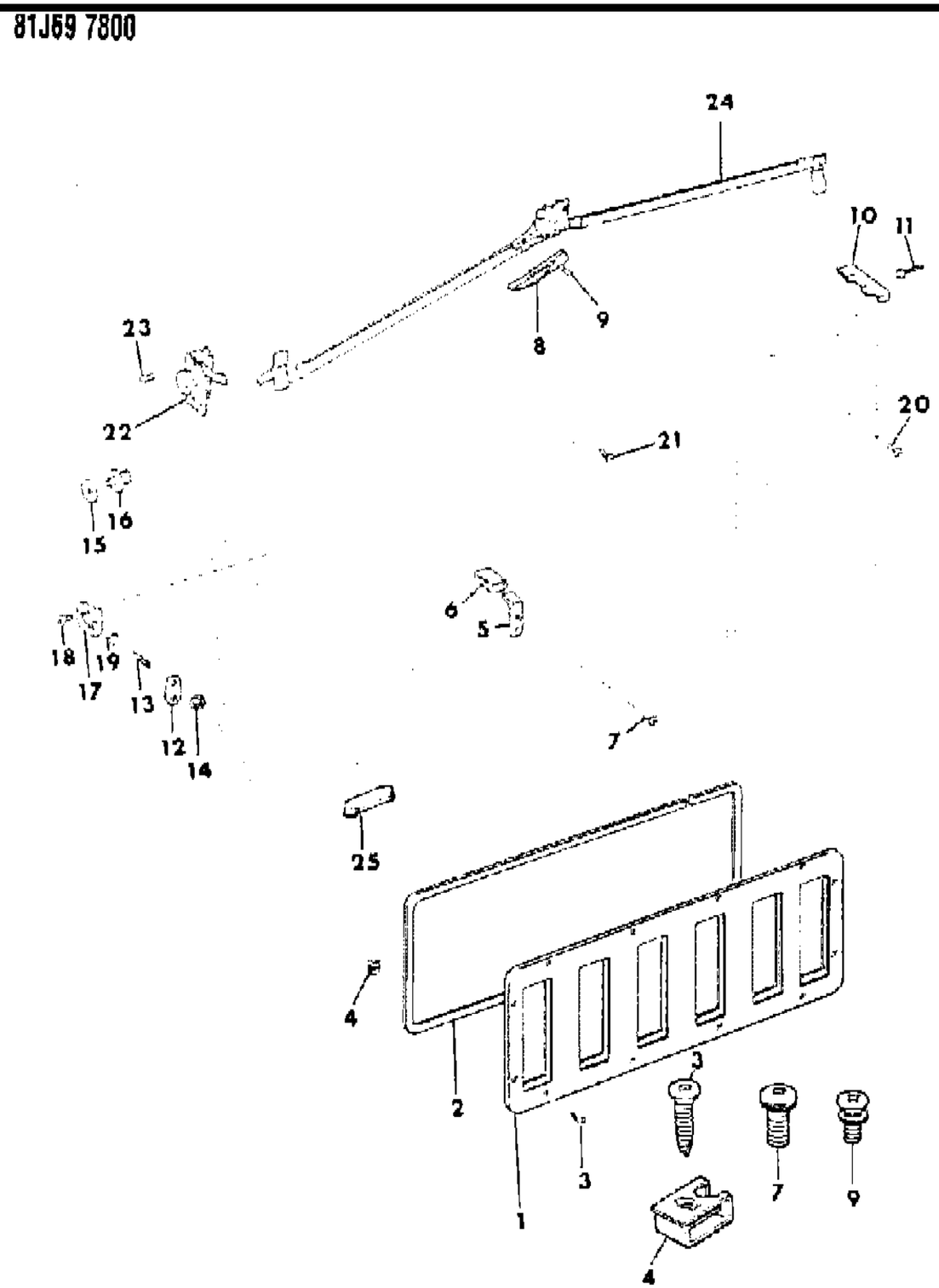

ITEM	PART NUMBER	QTY	BODY	MODEL	DESCRIPTION
1	J095 2567	1			COVER
2	J098 4755	1			GASKET, Cover
3	J096 6227	12			SCREW
4	J096 6217	12			NUT
5	J095 7743	2			BRACKET, Glass Stop
6	J097 6665	2			BUMPER, Stop
7	J027 2475	4			SCREW
8	J095 6374	1			HANDLE, Inside
9	J096 0212	1			SCREW
10					CAP, End
	J545 2498	1			Right
	J545 2497	1			Left
11	J400 4962	2			RIVET
12	J545 1569	2			PLATE
13	J400 5884	2			STUD
14	J400 4866	2			NUT
15	J400 6404	6			WASHER, Bite
16	J400 6406	2			STRIKER, Tailgate
17	J545 1600	2			RECEPTACLE, Dovetail Mounting
18	J400 3794	4			SCREW
19	J546 4444	2			INSERT
20	J018 8749	4			SCREW
21	J027 3333	4			SCREW
22					LATCH, Tailgate
	J575 0068	1			Right
	J575 0067	1			Left
23	J400 7032	6			SCREW
24	J096 1995	1			CONTROL, Tailgate Remote
25	J545 6156	2			SEAL, Dust

MODEL CODES

16=Cherokee 2 Dr.(1981-83)
17=Cherokee 2 Dr.(1981-83)
73=Cherokee 2WD-2 Dr.(1984-86)
74=Cherokee 2WD-4 Dr.(1984-86)
18=Cherokee 4 Dr.(1981-83)
77=Cherokee 4WD-2 Dr.(1984-86)
78=Cherokee 4WD-4 Dr.(1984-86)
85=CJ-5 (1981-83)
86=CJ-6(1981)
87=CJ-7(1981-86)
88=CJ-8, Scrambler(1981-86)
64=Comanche 2WD-6 Ft. Box(1986)
66=Comanche 2WD-7 Ft. Box(1986)
63=Comanche 4WD-6 Ft. Box(1986)
65=Comanche 4WD-7 Ft. Box(1986)
15=Grand Wagoneer 4 Dr.(1984-86)
25=J-10 Truck 7 Ft. Box(1981-84)
26=J10 Truck 8 Ft. Box(1981-86)
27=J-20 Truck 8 Ft. Box(1981-86)
15=Wagoneer 4 Dr.(1981-83)
75=Wagoneer 4WD-4 Dr.(1984-86)

BODY
CJ=CJ-5, CJ-6, CJ-7, CJ-8, Scrambler(1981-86)
MJ=Comanche Pickup(1986)

STYLES
SJ=Wagoneer(1981-83), Grand Wagoneer(1984-86), Cherokee(1981-83), J-10, J-20(1981-86)
XJ=Wagoneer(1984-86), Cherokee(1984-86)

AR = Use as Required - = Non Illustrated Part P.A.R. = Paint as Required

« RETURN TO GROUP INDEX

REGULATOR, TAILGATE GLASS MANUAL SJ CHEROKEE, SJ WAGONEER
Figure 23A-7900

81J69 7900

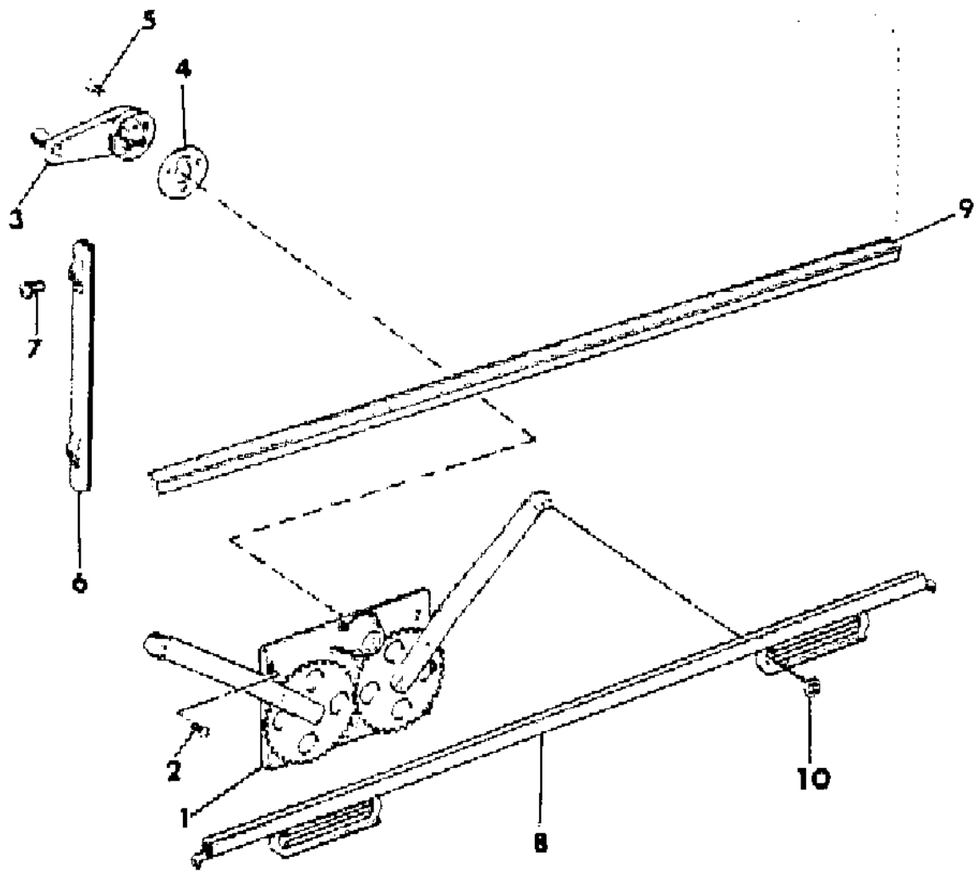

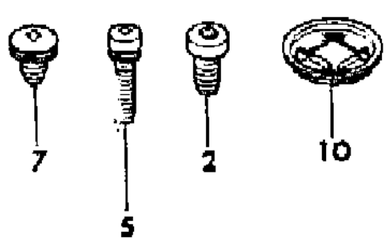

ITEM	PART NUMBER	QTY	BODY	MODEL	DESCRIPTION
1	J097 4016	1			REGULATOR, Glass
2	J400 3794	6			SCREW
3	J575 1929	1			HANDLE, Tailgate
4	J096 0205	1			GASKET
5	S045 5694	3			SCREW
6	J546 5084	2			CHANNEL, Window Guide
7	J097 9925	4			SCREW
8	J813 0454	1			CHANNEL, Glass
9	J546 9605	1			SEAL, Glass Lower
10	J098 0363	2			RETAINER

MODEL CODES

16=Cherokee 2 Dr.(1981-83)
17=Cherokee 2 Dr.(1981-83)
73=Cherokee 2WD-2 Dr.(1984-86)
74=Cherokee 2WD-4 Dr.(1984-86)
18=Cherokee 4 Dr.(1981-83)
77=Cherokee 4WD-2 Dr.(1984-86)
78=Cherokee 4WD-4 Dr.(1984-86)
85=CJ-5 (1981-83)
86=CJ-6(1981)
87=CJ-7(1981-86)
88=CJ-8, Scrambler(1981-86)
64=Comanche 2WD-6 Ft. Box(1986)
66=Comanche 2WD-7 Ft. Box(1986)
63=Comanche 4WD-6 Ft. Box(1986)
65=Comanche 4WD-7 Ft. Box(1986)
15=Grand Wagoneer 4 Dr.(1984-86)
25=J-10 Truck 7 Ft. Box(1981-84)
26=J10 Truck 8 Ft. Box(1981-86)
27=J-20 Truck 8 Ft. Box(1981-86)
15=Wagoneer 4 Dr.(1981-83)
75=Wagoneer 4WD-4 Dr.(1984-86)

BODY
CJ=CJ-5, CJ-6, CJ-7, CJ-8, Scrambler(1981-86)
MJ=Comanche Pickup(1986)

STYLES
SJ=Wagoneer(1981-83), Grand Wagoneer(1984-86), Cherokee(1981-83), J-10, J-20(1981-86)
XJ=Wagoneer(1984-86), Cherokee(1984-86)

AR = Use as Required - = Non Illustrated Part P.A.R. = Paint as Required

« RETURN TO GROUP INDEX

REGULATOR, TAILGATE GLASS ELECTRIC SJ CHEROKEE, SJ WAGONEER
Figure 23A-8000

81J69 8000

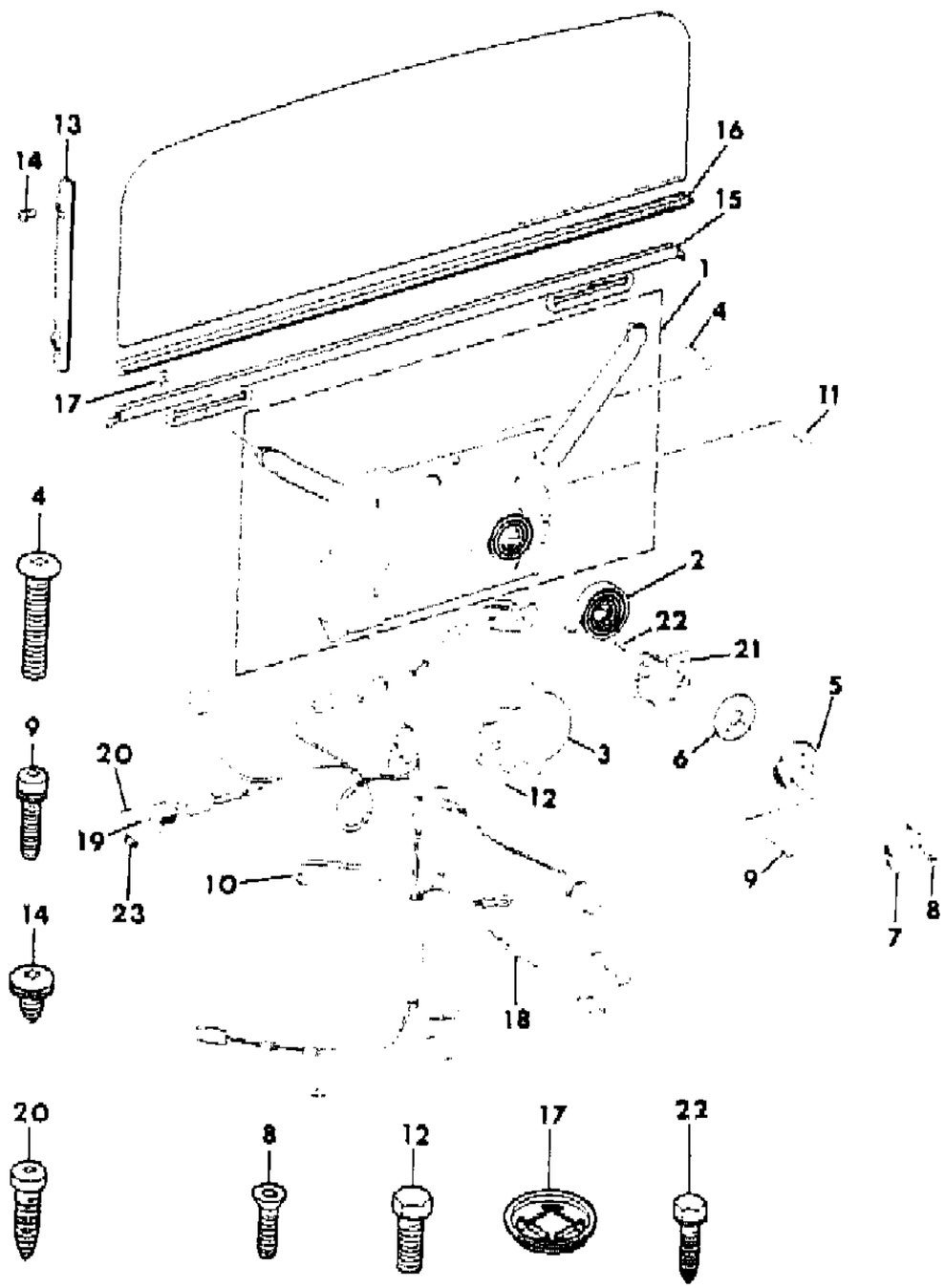

ITEM	PART NUMBER	QTY	BODY	MODEL	DESCRIPTION
1	J813 3035	1			REGULATOR, Glass
2	J812 9551	1			SPRING
3	J812 9549	1			MOTOR, Electric Window
4	J812 6447	6			SCREW
5	J096 1925	1			BASE, Regulator Switch
6	J096 0205	1			GASKET
7	J545 1502	1			COVER
8	J400 4969	2			SCREW
9	J400 0640	3			SCREW
10	J322 3227	AR			STRAP
11	J812 5586	6			SPACER
12	J812 5585	3			SCREW
13	J546 5084	2			CHANNEL, Window Guide
14	J097 9925	5			SCREW
15	J813 0454	1			CHANNEL, Glass Lifter
16	J546 9605	1			SEAL, Glass Lower
17	J098 0363	2			RETAINER
18					HARNESS, Tailgate
	J575 2858	1			1981: With Electric Window Regulators
	J576 1229	1			1982-86: With Electric Window Regulators
	J575 2767	1			1981: Without Electric Window Regulators, EXPORT
	J576 1230	1			1982-86: With Electric Window Regulators, EXPORT, Economic Commission of Europe
19	J575 0087	1			SWITCH, Safety
20	J016 2077	2			SCREW
21					SWITCH, Tailgate Glass
	J546 5053	1			1981
	5502 4356	1			1982-86
22	J400 5559	2			SCREW
23	J400 6405	1			SCREW

MODEL CODES

16=Cherokee 2 Dr.(1981-83)
17=Cherokee 2 Dr.(1981-83)
73=Cherokee 2WD-2 Dr.(1984-86)
74=Cherokee 2WD-4 Dr.(1984-86)
18=Cherokee 4 Dr.(1981-83)
77=Cherokee 4WD-2 Dr.(1984-86)
78=Cherokee 4WD-4 Dr.(1984-86)
85=CJ-5 (1981-83)
86=CJ-6(1981)
87=CJ-7(1981-86)
88=CJ-8, Scrambler(1981-86)
64=Comanche 2WD-6 Ft. Box(1986)
66=Comanche 2WD-7 Ft. Box(1986)
63=Comanche 4WD-6 Ft. Box(1986)
65=Comanche 4WD-7 Ft. Box(1986)
15=Grand Wagoneer 4 Dr.(1984-86)
25=J-10 Truck 7 Ft. Box(1981-84)
26=J10 Truck 8 Ft. Box(1981-86)
27=J-20 Truck 8 Ft. Box(1981-86)
15=Wagoneer 4 Dr.(1981-83)
75=Wagoneer 4WD-4 Dr.(1984-86)

BODY
CJ=CJ-5, CJ-6, CJ-7, CJ-8, Scrambler(1981-86)
MJ=Comanche Pickup(1986)

STYLES
SJ=Wagoneer(1981-83), Grand Wagoneer(1984-86), Cherokee(1981-83), J-10, J-20(1981-86)
XJ=Wagoneer(1984-86), Cherokee(1984-86)

AR = Use as Required - = Non Illustrated Part P.A.R. = Paint as Required

« RETURN TO GROUP INDEX

PANELS, BODY SIDE AND REAR J10, J20
Figure 23A-8100

81J69 8100

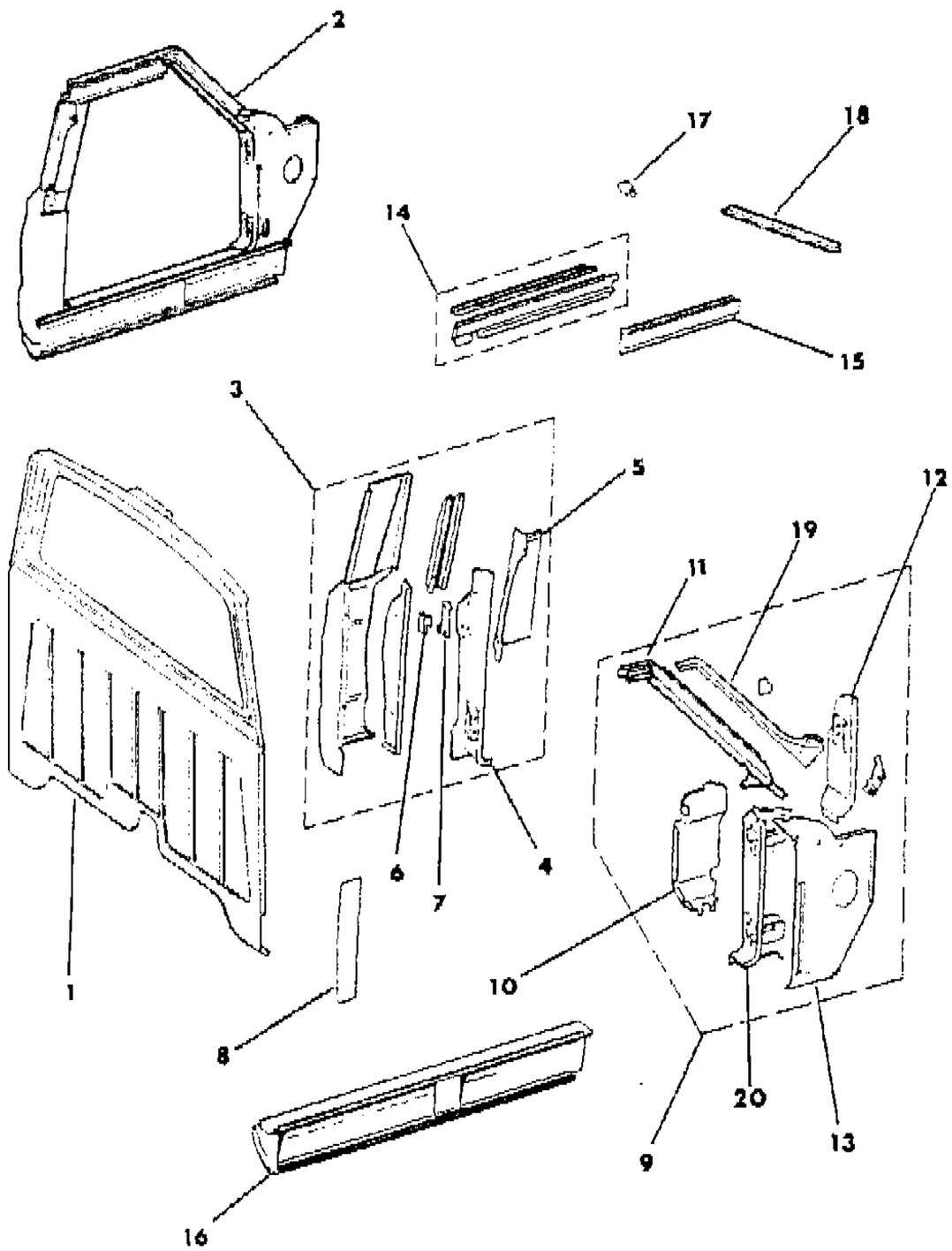

ITEM	PART NUMBER	QTY	BODY	MODEL	DESCRIPTION
1	J546 1576	1			PANEL, Cab Rear
2	J575 8036-7	1			PANEL, Side
3					PANEL, Lock Pillar
	J575 0140	1			Right
	J575 0137	1			Left
4					PILLAR, Lock
	J575 0139	1			Right
	J575 0136	1			Left
5					PANEL,. Side Inner
	J546 1574	1			Right
	J546 1573	1			Left
6	J575 0092	2			RETAINER, Tapping Plate
7	J575 0091	2			PLATE, Tapping
8	J575 1733	2			PANEL, Lower Finish
9	J575 7492-3	1			PILLAR, Hinge
10	J813 3140-1	1			PANEL, Cowl Side
11					PILLAR, Body
	J095 6778	1			Right
	J095 6777	1			Left
12					PANEL, Cowl Side
	J095 7468	1			Right
	J545 0135	1			Left
13					PANEL, Inner
	J575 1926	1			Right
	J575 8033	1			Left
14	J575 7304-5	1			RAIL, Roof Outer
15					RAIL, Roof Inner
	J545 2426	1			Right
	J545 2425	1			Left
16					PANEL, Rocker
	J546 5048	1			Right
	J546 5047	1			Left
17	J096 8201	2			CAP, Molding
18					MOULDING, Drip
	J096 8210	1			Right
	J096 8209	1			Left
19					REINFORCMENT, Pillar ***
	J095 9548	1			Right
	J095 6643	1			Left

MODEL CODES

16=Cherokee 2 Dr.(1981-83)
17=Cherokee 2 Dr.(1981-83)
73=Cherokee 2WD-2 Dr.(1984-86)
74=Cherokee 2WD-4 Dr.(1984-86)
18=Cherokee 4 Dr.(1981-83)
77=Cherokee 4WD-2 Dr.(1984-86)
78=Cherokee 4WD-4 Dr.(1984-86)
85=CJ-5 (1981-83)
86=CJ-6(1981)
87=CJ-7(1981-86)
88=CJ-8, Scrambler(1981-86)
64=Comanche 2WD-6 Ft. Box(1986)
66=Comanche 2WD-7 Ft. Box(1986)
63=Comanche 4WD-6 Ft. Box(1986)
65=Comanche 4WD-7 Ft. Box(1986)
15=Grand Wagoneer 4 Dr.(1984-86)
25=J-10 Truck 7 Ft. Box(1981-84)
26=J10 Truck 8 Ft. Box(1981-86)
27=J-20 Truck 8 Ft. Box(1981-86)
15=Wagoneer 4 Dr.(1981-83)
75=Wagoneer 4WD-4 Dr.(1984-86)

BODY
CJ=CJ-5, CJ-6, CJ-7, CJ-8, Scrambler(1981-86)
MJ=Comanche Pickup(1986)

STYLES
SJ=Wagoneer(1981-83), Grand Wagoneer(1984-86), Cherokee(1981-83), J-10, J-20(1981-86)
XJ=Wagoneer(1984-86), Cherokee(1984-86)

AR = Use as Required - = Non Illustrated Part P.A.R. = Paint as Required

« RETURN TO GROUP INDEX »

PANELS, BODY SIDE AND REAR J10, J20
Figure 23A-8100

81J69 8100

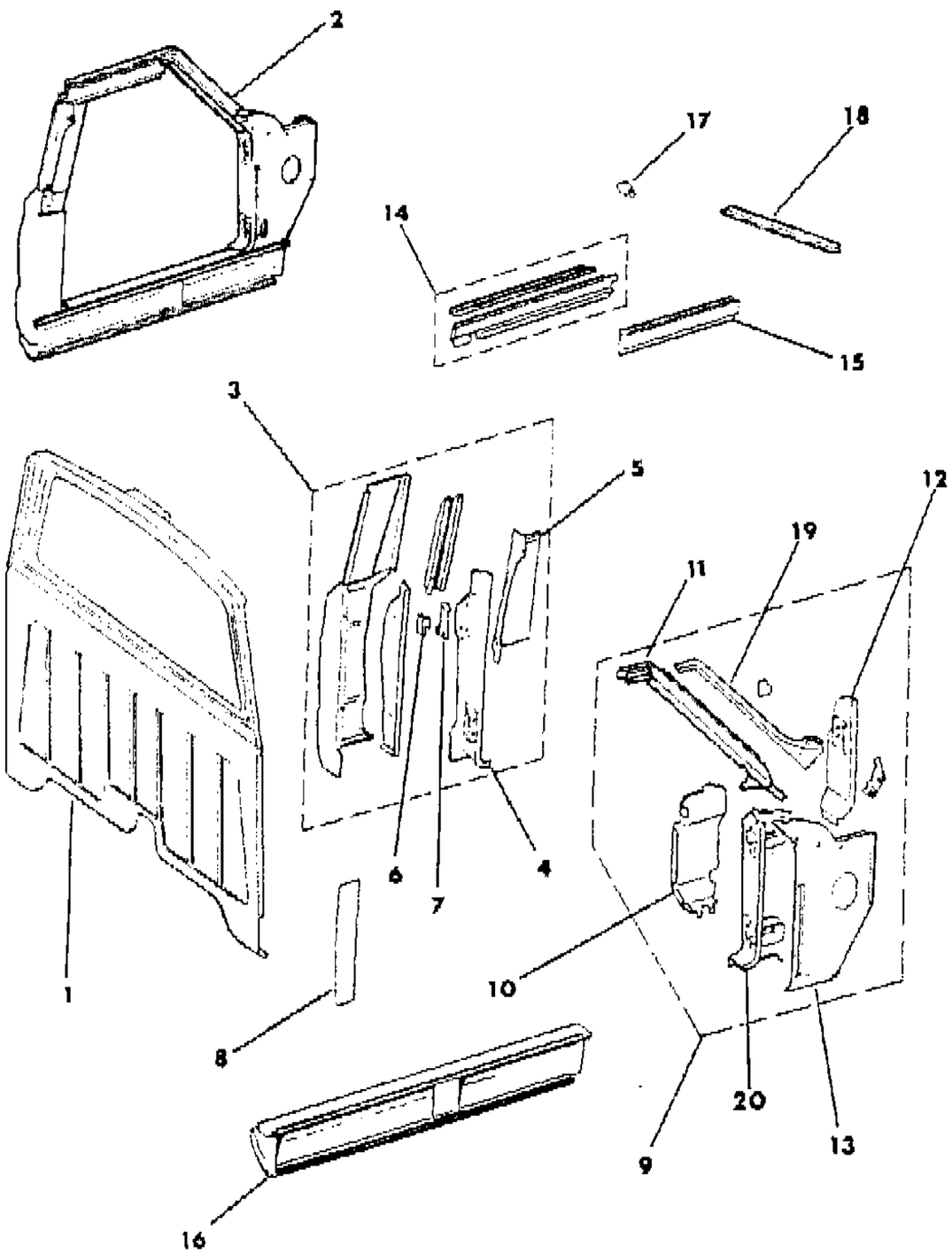

ITEM	PART NUMBER	QTY	BODY	MODEL	DESCRIPTION
20	J575 7324-5	1			PILLAR, Body

MODEL CODES

16=Cherokee 2 Dr.(1981-83)	78=Cherokee 4WD-4 Dr.(1984-86)	64=Comanche 2WD-6 Ft. Box(1986)	25=J-10 Truck 7 Ft. Box(1981-84)
17=Cherokee 2 Dr.(1981-83)	85=CJ-5 (1981-83)	66=Comanche 2WD-7 Ft. Box(1986)	26=J10 Truck 8 Ft. Box(1981-86)
73=Cherokee 2WD-2 Dr.(1984-86)	86=CJ-6(1981)	63=Comanche 4WD-6 Ft. Box(1986)	27=J-20 Truck 8 Ft. Box(1981-86)
74=Cherokee 2WD-4 Dr.(1984-86)	87=CJ-7(1981-86)	65=Comanche 4WD-7 Ft. Box(1986)	15=Wagoneer 4 Dr.(1981-83)
18=Cherokee 4 Dr.(1981-83)	88=CJ-8, Scrambler(1981-86)	15=Grand Wagoneer 4 Dr.(1984-86)	75=Wagoneer 4WD-4 Dr.(1984-86)
77=Cherokee 4WD-2 Dr.(1984-86)			

BODY
CJ=CJ-5, CJ-6, CJ-7, CJ-8, Scrambler(1981-86)
MJ=Comanche Pickup(1986)

STYLES
SJ=Wagoneer(1981-83), Grand Wagoneer(1984-86), Cherokee(1981-83), J-10, J-20(1981-86)
XJ=Wagoneer(1984-86), Cherokee(1984-86)

AR = Use as Required - = Non Illustrated Part P.A.R. = Paint as Required

« RETURN TO GROUP INDEX

PANELS, ROOF SJ CHEROKEE, SJ WAGONEER J10, J20
Figure 23A-8200

81J69 8200

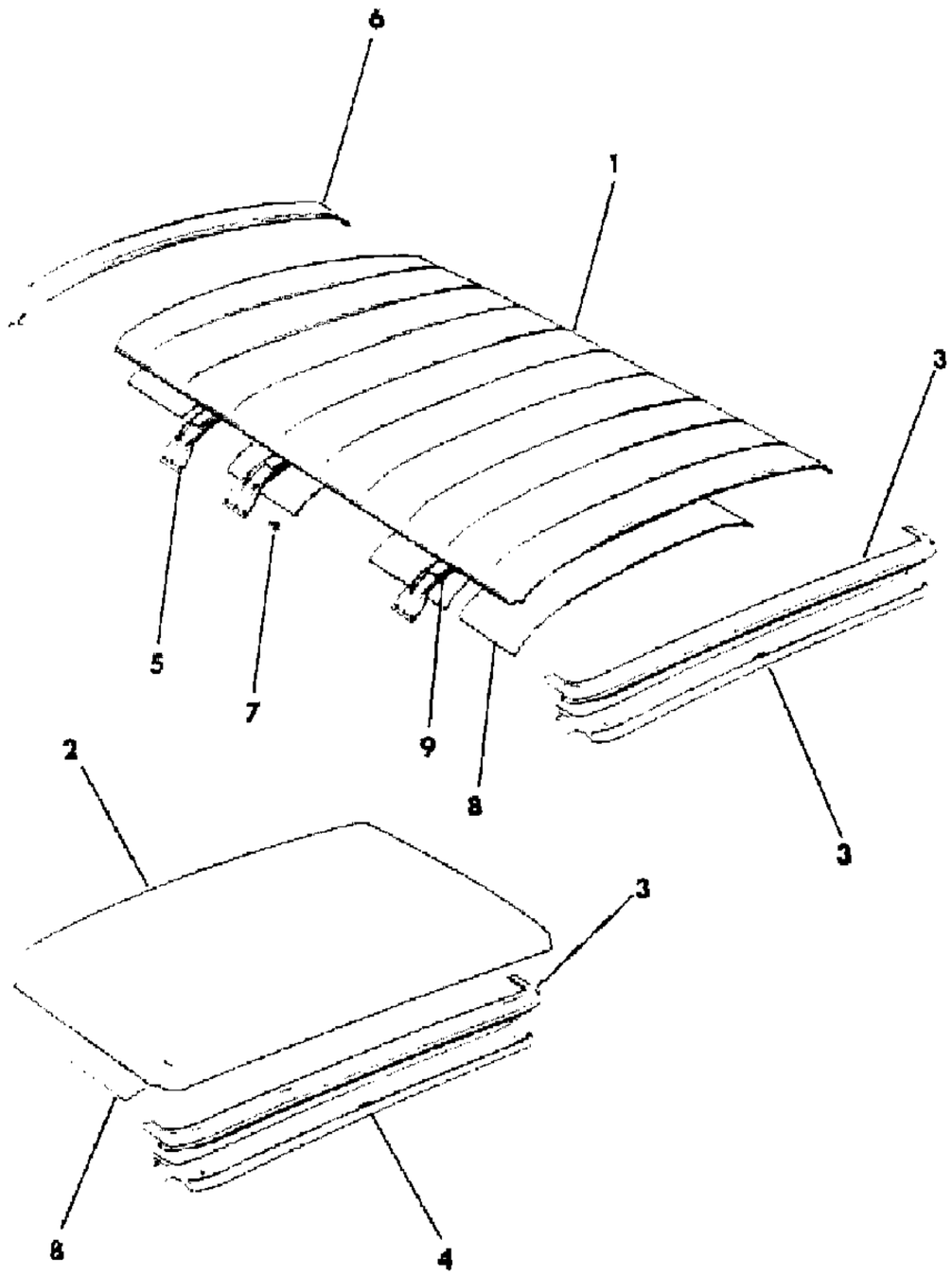

ITEM	PART NUMBER	QTY	BODY	MODEL	DESCRIPTION
1					PANEL, Roof
	J096 5537	1			Wagon, Less Sunroof
	J575 1799	1			Wagon, With Sunroof, Manual
2	J575 2418	1			PANEL, Roof, Truck
3	J095 5332	1			HEADER, Front ***
4	J545 1430	1			HEADER, Front ***
5	J546 9863	3			SUPPORT, Roof, Wagon, Modification Required
6	J545 5370	1			HEADER, Rear, Wagon ***
7	J400 4884	12			SCREW, Wagon
8	J546 6338	AR			SILENCER
9	J545 4867	3			PAD, Wagon

MODEL CODES

16=Cherokee 2 Dr.(1981-83)	78=Cherokee 4WD-4 Dr.(1984-86)	64=Comanche 2WD-6 Ft. Box(1986)	25=J-10 Truck 7 Ft. Box(1981-84)
17=Cherokee 2 Dr.(1981-83)	85=CJ-5 (1981-83)	66=Comanche 2WD-7 Ft. Box(1986)	26=J10 Truck 8 Ft. Box(1981-86)
73=Cherokee 2WD-2 Dr.(1984-86)	86=CJ-6(1981)	63=Comanche 4WD-6 Ft. Box(1986)	27=J-20 Truck 8 Ft. Box(1981-86)
74=Cherokee 2WD-4 Dr.(1984-86)	87=CJ-7(1981-86)	65=Comanche 4WD-7 Ft. Box(1986)	15=Wagoneer 4 Dr.(1981-83)
18=Cherokee 4 Dr.(1981-83)	88=CJ-8, Scrambler(1981-86)	15=Grand Wagoneer 4 Dr.(1984-86)	75=Wagoneer 4WD-4 Dr.(1984-86)
77=Cherokee 4WD-2 Dr.(1984-86)			

BODY
CJ=CJ-5, CJ-6, CJ-7, CJ-8, Scrambler(1981-86)
MJ=Comanche Pickup(1986)

STYLES
SJ=Wagoneer(1981-83), Grand Wagoneer(1984-86), Cherokee(1981-83), J-10, J-20(1981-86)
XJ=Wagoneer(1984-86), Cherokee(1984-86)

AR = Use as Required - = Non Illustrated Part P.A.R. = Paint as Required

« RETURN TO GROUP INDEX

SEALS AND GLASS WINDSHIELD, QUARTER AND TAILGATE SJ CHEROKEE, SJ WAGONEER
Figure 23A-8300

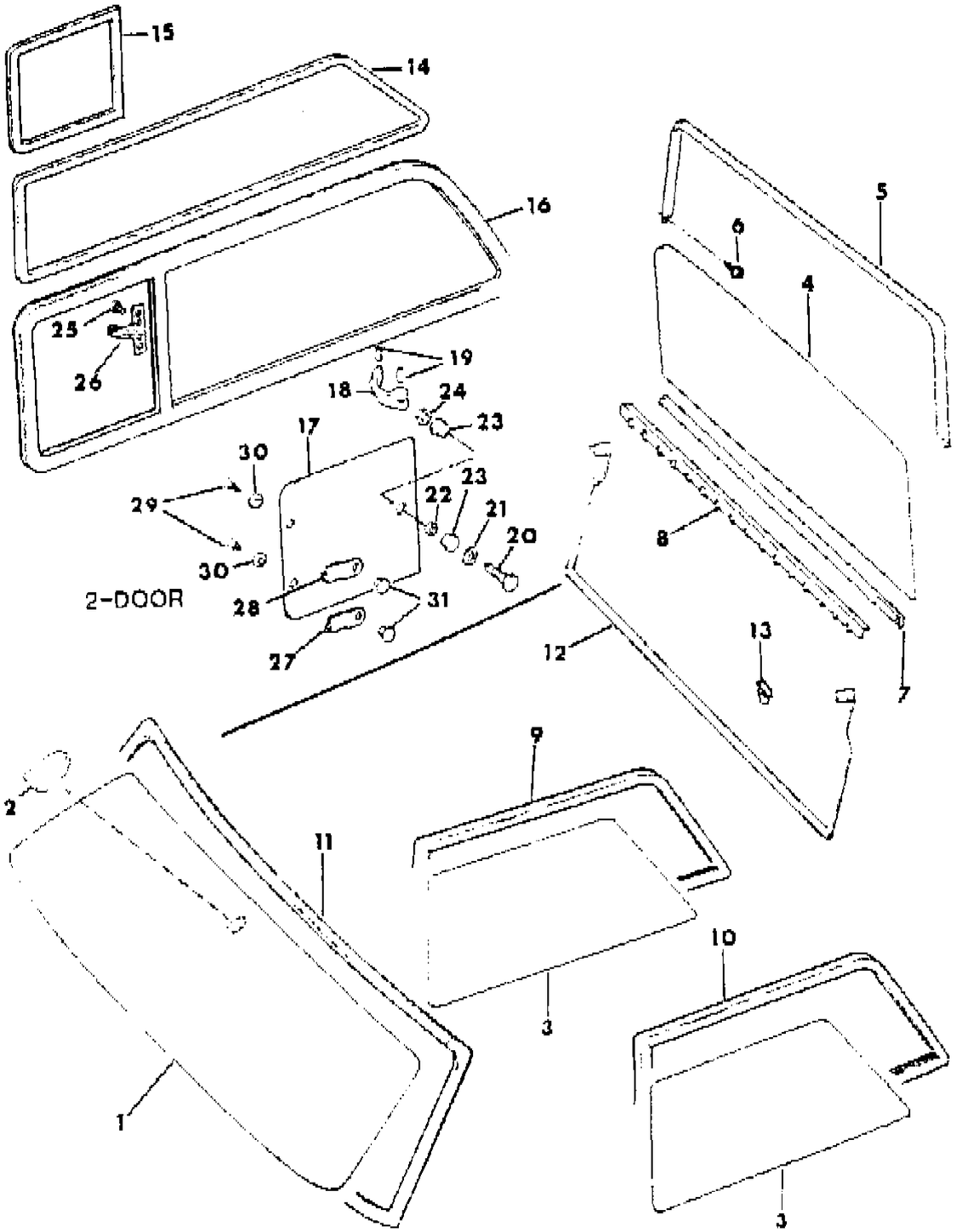

ITEM	PART NUMBER	QTY	BODY	MODEL	DESCRIPTION
1					GLASS, Windshield
	J546 9503	1			Clear
	J546 9500	1			Tinted
	J576 1743	1			Clear, Australian Design Rules
	J575 7073	1			Clear, EXPORT, Economic Commission of Europe
	J575 7076	1			Tinted, EXPORT, Economic Commission of Europe
2	J365 7374	1			SUPPORT, Inside Rear View Mirror Mounting (A)
3					GLASS, Quarter
					2 DOOR
	J546 9539	2			Clear
	J546 9600	1			Tinted
	J575 6187	2			Clear, EXPORT
	J575 6188	2			Tinted, EXPORT
					4 DOOR
	J546 9535	2			Clear
	J546 9536	2			Tinted
	J575 6702	2			Clear, EXPORT
	J575 6703	2			Tinted, EXPORT
4					GLASS, Tailgate
	J546 9610	1			Tinted
	J575 2859	1			Tinted, With Rear Window Defogger
	J575 6192	1			Clear, EXPORT
	J575 6193	1			Tinted, EXPORT
	J575 6191	1			Tinted, EXPORT, With Rear Window Defogger
5	J545 5966	1			CHANNEL, Glass
6	J400 4171	2			SCREW
7					WEATHERSTRIP, Tailgate Outer
	J096 6331	1			1981-85
	5505 2566	1			1986
8	J546 2332	1			WEATHERSTRIP, Tailgate Inner
9	J546 9537	1			WEATHERSTRIP, Fixed Glass, Right, 2 Door
	J546 9532	1			SEAL, Quarter Window, Right, 4 Door
10	J546 9537	1			WEATHERSTRIP, Fixed Glass, Left, 2 Door
	J546 9531	1			SEAL, Quarter Window, Left, 4 Door
11	J546 9504	1			SEAL, Windshield
12	J545 1573	1			SEAL, Tailgate
13	J400 1916	11			FASTENER
14	J813 0886	2			WEATHERSTRIP, Vent Window, 2 Door
15	J813 0884-5	1			WEATHERSTRIP, Vent Glass, 2 Door

MODEL CODES

16=Cherokee 2 Dr.(1981-83)
17=Cherokee 2 Dr.(1981-83)
73=Cherokee 2WD-2 Dr.(1984-86)
74=Cherokee 2WD-4 Dr.(1984-86)
18=Cherokee 4 Dr.(1981-83)
77=Cherokee 4WD-2 Dr.(1984-86)
78=Cherokee 4WD-4 Dr.(1984-86)
85=CJ-5 (1981-83)
86=CJ-6(1981)
87=CJ-7(1981-86)
88=CJ-8, Scrambler(1981-86)
64=Comanche 2WD-6 Ft. Box(1986)
66=Comanche 2WD-7 Ft. Box(1986)
63=Comanche 4WD-6 Ft. Box(1986)
65=Comanche 4WD-7 Ft. Box(1986)
15=Grand Wagoneer 4 Dr.(1984-86)
25=J-10 Truck 7 Ft. Box(1981-84)
26=J10 Truck 8 Ft. Box(1981-86)
27=J-20 Truck 8 Ft. Box(1981-86)
15=Wagoneer 4 Dr.(1981-83)
75=Wagoneer 4WD-4 Dr.(1984-86)

BODY
CJ=CJ-5, CJ-6, CJ-7, CJ-8, Scrambler(1981-86)
MJ=Comanche Pickup(1986)

STYLES
SJ=Wagoneer(1981-83), Grand Wagoneer(1984-86), Cherokee(1981-83), J-10, J-20(1981-86)
XJ=Wagoneer(1984-86), Cherokee(1984-86)

AR = Use as Required - = Non Illustrated Part P.A.R. = Paint as Required

SEALS AND GLASS WINDSHIELD, QUARTER AND TAILGATE SJ CHEROKEE, SJ WAGONEER
Figure 23A-8300

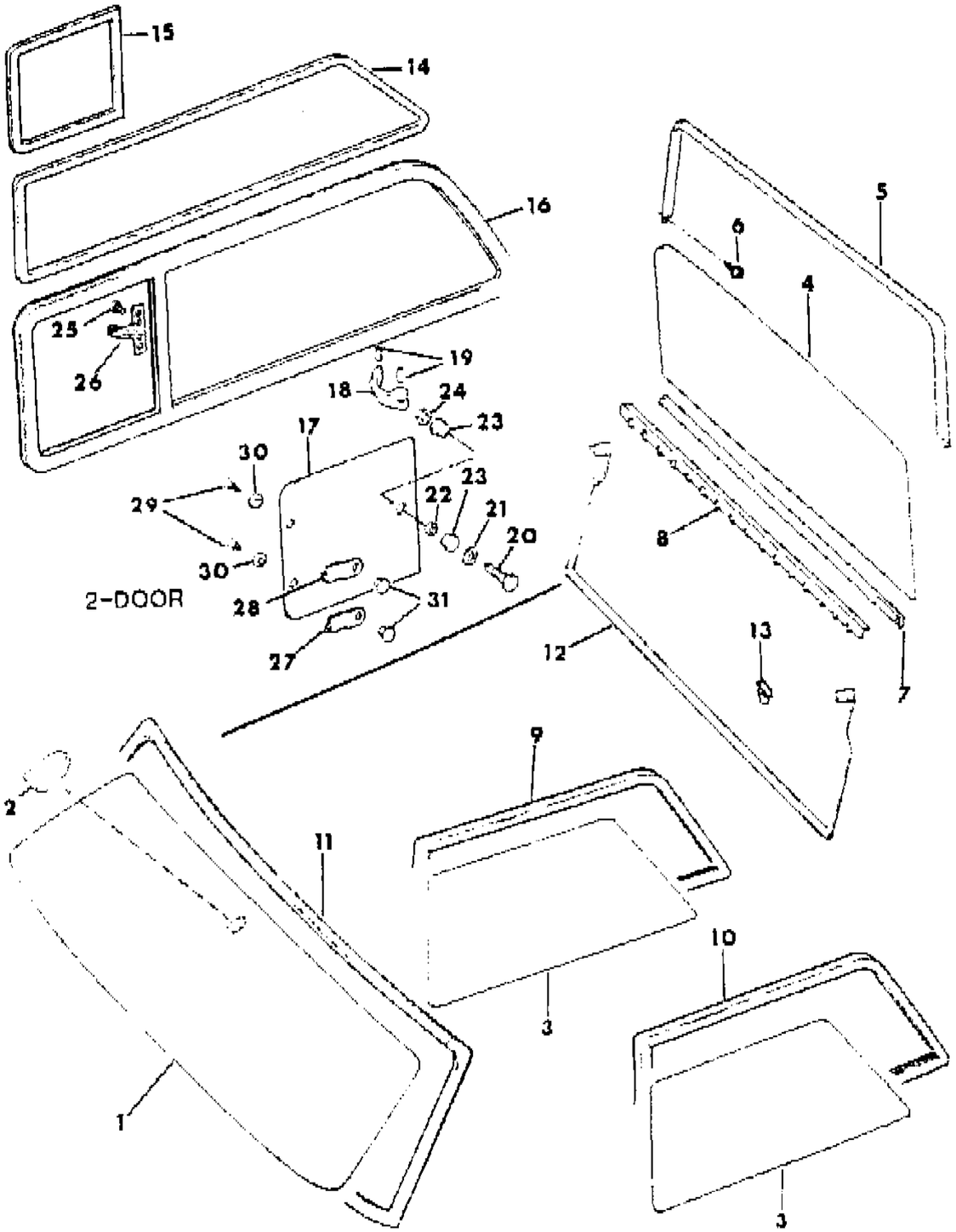

ITEM	PART NUMBER	QTY	BODY	MODEL	DESCRIPTION
16					GLASS ASSEMBLY, Quarter
	J546 4480-1	1			Clear
	J575 6720-1	1			Clear, EXPORT
	J546 4482-3	1			Tinted
	J575 6722-3	1			Tinted, EXPORT
	J546 9696	1			Bronze, Right
	J546 9695	1			Bronze, Left
	J575 1256-7	1			Grey
17					GLASS, Quarter Vent
	J813 0880	2			Clear
	J575 6705	2			Clear, EXPORT
	J813 0881	2			Tinted
	J575 6709	2			Tinted, EXPORT
	J813 0882-3	1			Bronze
	J813 0894-5	1			Grey
18	J812 4946	2			HANDLE
19	J812 0648	AR			PIN
20	J364 6215	2			STUD
21	J400 3578	2			WASHER, Wave
22	J364 6218	2			WASHER, Plain
23	J364 6217	4			COLLAR
24	J400 4570	2			NUT
25	J813 0887	8			SCREW
26	J813 0890	1			LATCH
27	J813 0888	2			HINGE, Lower
28	J813 0889	2			HINGE, Upper
29	J813 0893	4			SCREW
30	J813 0892	1			CAP
31	J813 0891	4			BUSHING

(A) When installing a Mirror Support, use Locktite #312 Adshesive and the Acccelerator for Locktite #312. (c) End of decal is open

MODEL CODES

16=Cherokee 2 Dr.(1981-83)
17=Cherokee 2 Dr.(1981-83)
73=Cherokee 2WD-2 Dr.(1984-86)
74=Cherokee 2WD-4 Dr.(1984-86)
18=Cherokee 4 Dr.(1981-83)
77=Cherokee 4WD-2 Dr.(1984-86)
78=Cherokee 4WD-4 Dr.(1984-86)
85=CJ-5 (1981-83)
86=CJ-6(1981)
87=CJ-7(1981-86)
88=CJ-8, Scrambler(1981-86)
64=Comanche 2WD-6 Ft. Box(1986)
66=Comanche 2WD-7 Ft. Box(1986)
63=Comanche 4WD-6 Ft. Box(1986)
65=Comanche 4WD-7 Ft. Box(1986)
15=Grand Wagoneer 4 Dr.(1984-86)
25=J-10 Truck 7 Ft. Box(1981-84)
26=J10 Truck 8 Ft. Box(1981-86)
27=J-20 Truck 8 Ft. Box(1981-86)
15=Wagoneer 4 Dr.(1981-83)
75=Wagoneer 4WD-4 Dr.(1984-86)

BODY
CJ=CJ-5, CJ-6, CJ-7, CJ-8, Scrambler(1981-86)
MJ=Comanche Pickup(1986)

STYLES
SJ=Wagoneer(1981-83), Grand Wagoneer(1984-86), Cherokee(1981-83), J-10, J-20(1981-86)
XJ=Wagoneer(1984-86), Cherokee(1984-86)

AR = Use as Required - = Non Illustrated Part P.A.R. = Paint as Required

« RETURN TO GROUP INDEX

SEALS AND GLASS WINDSHIELD AND REAR WINDOWS J10, J20
Figure 23A-8400

81J69 8400

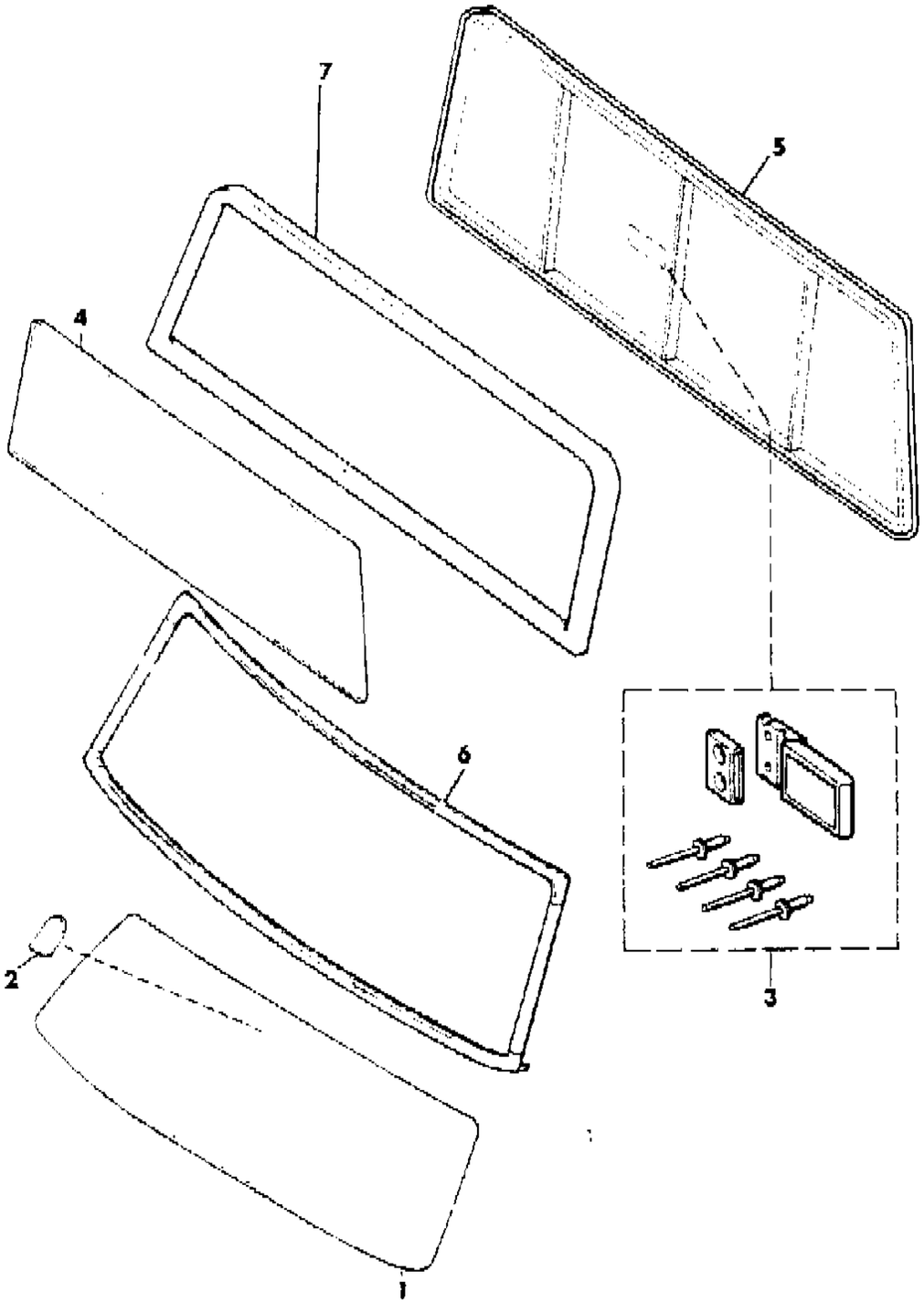

ITEM	PART NUMBER	QTY	BODY	MODEL	DESCRIPTION
1					GLASS, Windshield
	J546 9503	1			Clear
	J546 9500	1			Tinted
	J576 1743	1			Clear, Australian Design Rules
	J575 7073	1			Clear, EXPORT, Economic Commission of Europe
	J575 7076	1			Tinted, EXPORT, Economic Commission of Europe
2	J365 7374	1			SUPPORT, Inside Rear View Mirror Mounting (A)
3	J812 9269	1			LOCK PACKAGE ***
4					GLASS, Rear Window
	J546 9601	1			Clear
	J546 9602	1			Tinted
	J575 6176	1			Clear, EXPORT
	J575 6177	1			Tinted, EXPORT
5					GLASS, Sliding
	J545 9237	1			Clear
	J575 7311	1			Clear, EXPORT
6	J546 9504	1			SEAL, Windshield
7	J546 9603	1			SEAL, Rear Window

(A) When installing a Mirror Support, use Locktite #312 Adhesive and the Accelerator for Locktite #312. (c) End of decal is open

MODEL CODES

16=Cherokee 2 Dr.(1981-83)
17=Cherokee 2 Dr.(1981-83)
73=Cherokee 2WD-2 Dr.(1984-86)
74=Cherokee 2WD-4 Dr.(1984-86)
18=Cherokee 4 Dr.(1981-83)
77=Cherokee 4WD-2 Dr.(1984-86)
78=Cherokee 4WD-4 Dr.(1984-86)
85=CJ-5 (1981-83)
86=CJ-6(1981)
87=CJ-7(1981-86)
88=CJ-8, Scrambler(1981-86)
64=Comanche 2WD-6 Ft. Box(1986)
66=Comanche 2WD-7 Ft. Box(1986)
63=Comanche 4WD-6 Ft. Box(1986)
65=Comanche 4WD-7 Ft. Box(1986)
15=Grand Wagoneer 4 Dr.(1984-86)
25=J-10 Truck 7 Ft. Box(1981-84)
26=J10 Truck 8 Ft. Box(1981-86)
27=J-20 Truck 8 Ft. Box(1981-86)
15=Wagoneer 4 Dr.(1981-83)
75=Wagoneer 4WD-4 Dr.(1984-86)

BODY
CJ=CJ-5, CJ-6, CJ-7, CJ-8, Scrambler(1981-86)
MJ=Comanche Pickup(1986)

STYLES
SJ=Wagoneer(1981-83), Grand Wagoneer(1984-86), Cherokee(1981-83), J-10, J-20(1981-86)
XJ=Wagoneer(1984-86), Cherokee(1984-86)

AR = Use as Required - = Non Illustrated Part P.A.R. = Paint as Required

« RETURN TO GROUP INDEX

RACK, ROOF LUGGAGE SJ CHEROKEE, SJ WAGONEER
Figure 23A-8500

81J69 8500

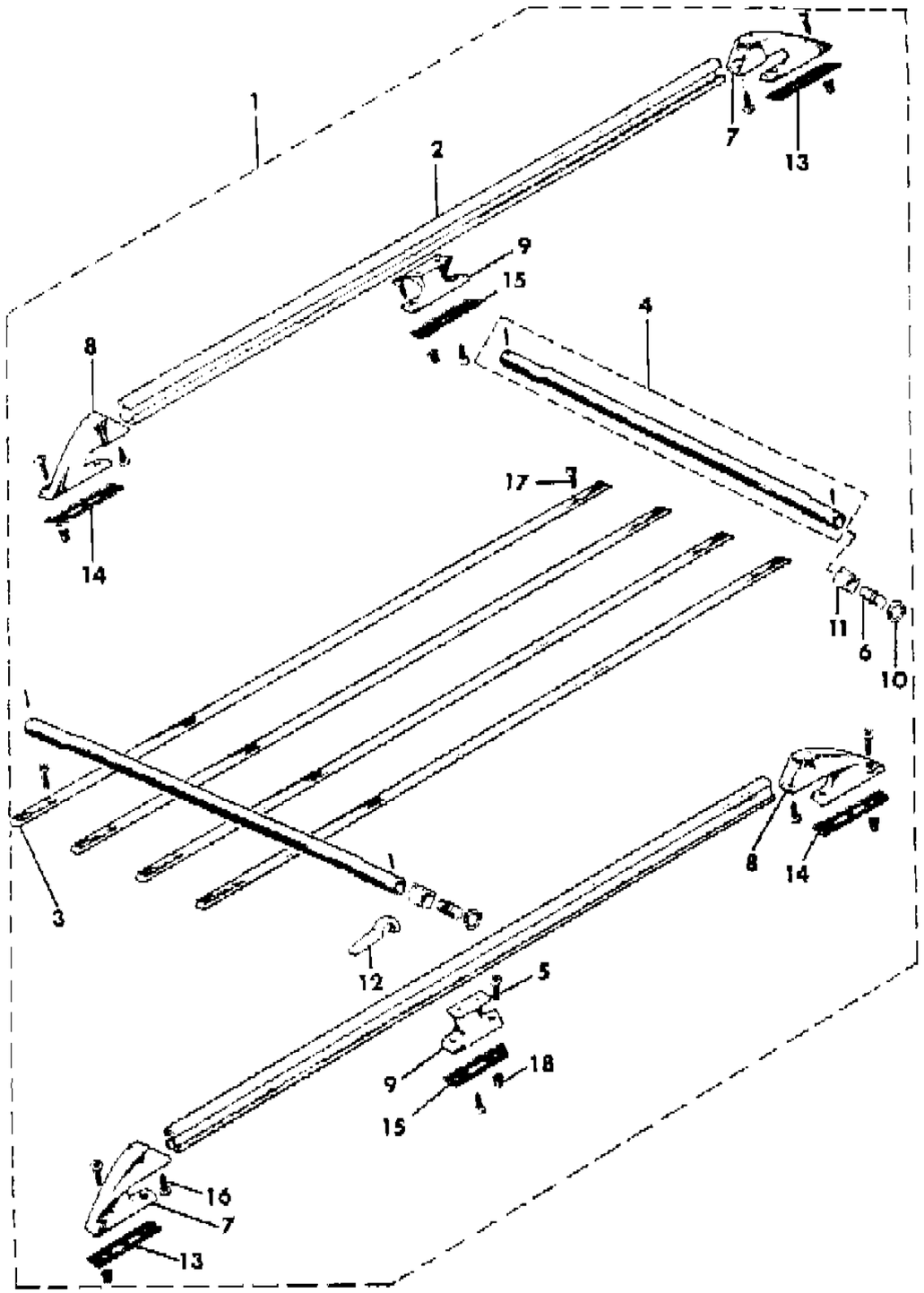

ITEM	PART NUMBER	QTY	BODY	MODEL	DESCRIPTION
1	J899 7039	1			RACK PACKAGE ***
2	J546 9360	2			RAIL, Side
3	5505 2610	4			STRIP, Skid
4	J546 5669	2			RAIL, Cross
5	S941 6343	12			SCREW
6	J546 5670	4			STUD
7	J546 5663	2			SUPPORT, Side Rail
8	J546 5664	2			SUPPORT, Side Rail
9	J546 5675	2			SUPPORT, Center
10	J546 5667	4			WASHER
11	J812 4401	4			NUT
12	J546 5672	1			WRENCH, Cross Rail Adjusting ***
13	J546 5666	2			PAD
14	J546 5665	2			PAD
15	J546 5676	2			PAD
16	J400 6438	8			SCREW
17	J400 6401	12			SCREW
18	J400 3120	12			NUT, Well

MODEL CODES

16=Cherokee 2 Dr.(1981-83)
17=Cherokee 2 Dr.(1981-83)
73=Cherokee 2WD-2 Dr.(1984-86)
74=Cherokee 2WD-4 Dr.(1984-86)
18=Cherokee 4 Dr.(1981-83)
77=Cherokee 4WD-2 Dr.(1984-86)
78=Cherokee 4WD-4 Dr.(1984-86)
85=CJ-5 (1981-83)
86=CJ-6(1981)
87=CJ-7(1981-86)
88=CJ-8, Scrambler(1981-86)
64=Comanche 2WD-6 Ft. Box(1986)
66=Comanche 2WD-7 Ft. Box(1986)
63=Comanche 4WD-6 Ft. Box(1986)
65=Comanche 4WD-7 Ft. Box(1986)
15=Grand Wagoneer 4 Dr.(1984-86)
25=J-10 Truck 7 Ft. Box(1981-84)
26=J10 Truck 8 Ft. Box(1981-86)
27=J-20 Truck 8 Ft. Box(1981-86)
15=Wagoneer 4 Dr.(1981-83)
75=Wagoneer 4WD-4 Dr.(1984-86)

BODY
CJ=CJ-5, CJ-6, CJ-7, CJ-8, Scrambler(1981-86)
MJ=Comanche Pickup(1986)

STYLES
SJ=Wagoneer(1981-83), Grand Wagoneer(1984-86), Cherokee(1981-83), J-10, J-20(1981-86)
XJ=Wagoneer(1984-86), Cherokee(1984-86)

AR = Use as Required - = Non Illustrated Part P.A.R. = Paint as Required

« RETURN TO GROUP INDEX

SUNROOF, SLIDING SJ CHEROKEE, SJ WAGONEER
Figure 23A-8600

81J69 8600

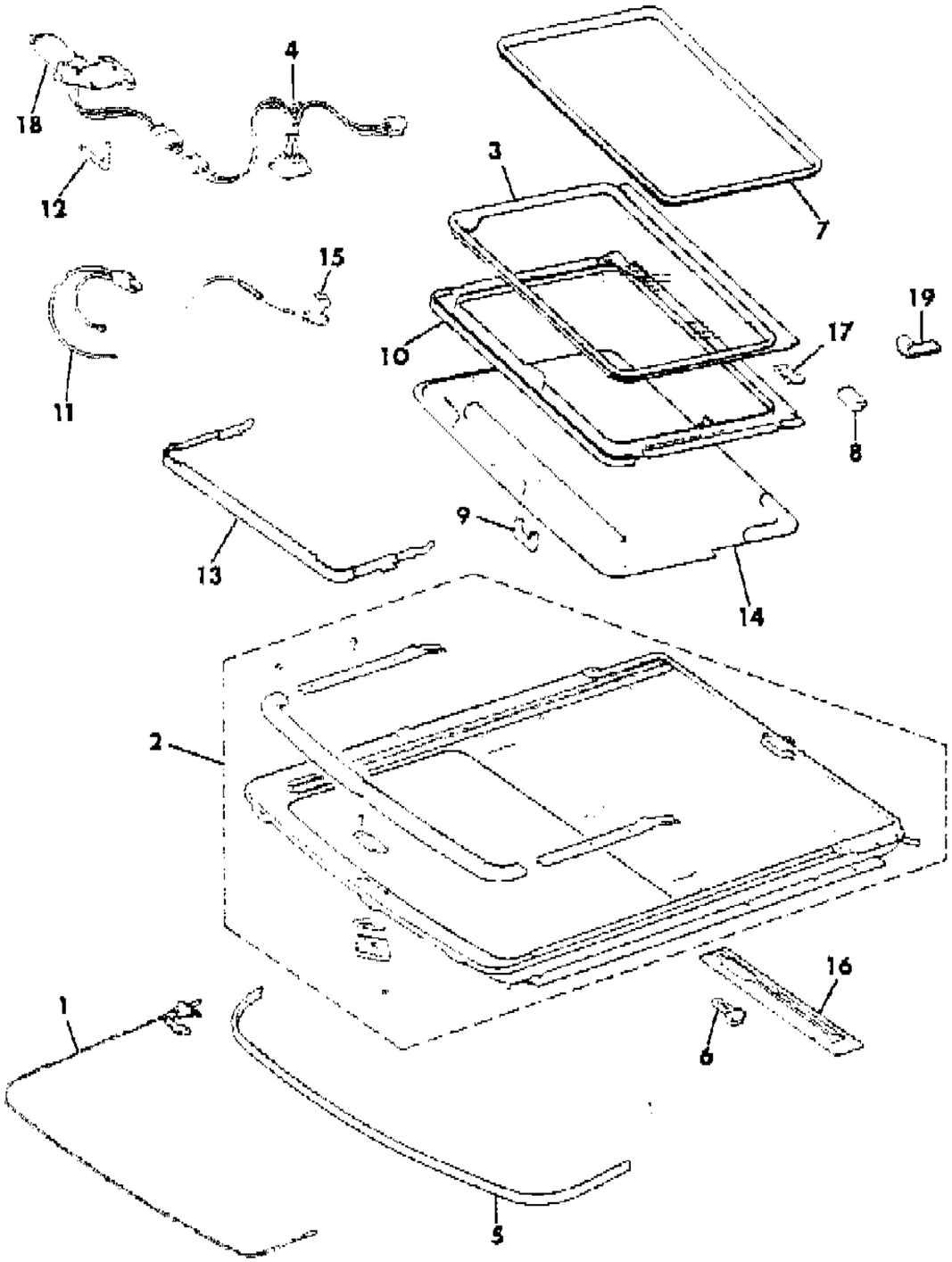

ITEM	PART NUMBER	QTY	BODY	MODEL	DESCRIPTION
1	J813 3198-9	1			CABLE
2					HOUSING ASSEMBLY
	J813 3200	1			1981-84: With Vinyl Roof Cover
	8350 2849	1			1985-86: With Vinyl Roof Cover
	8350 3304	1			1986: Without Vinyl Roof Cover
3					GLASS, Sunroof
	J813 3201	1			1981-86: Silver, With Vinyl Roof Cover
	8350 3305	1			1986: Without Vinyl Roof Cover
4					SWITCH
	J813 3202	1			1981-84
	8350 2850	1			1985-86
5					SEAL
	J813 3203	1			1981-86: With Vinyl Roof Cover
	8350 3306	1			1986: Without Vinyl Roof Cover
6	J813 3204	2			GUIDE
7	8350 2852	1			MOLDING, Roof, 1986, Without Vinyl Roof Cover ***
8	J813 3208	1			CATCH
9					HANDLE, Sun Screen
	J813 3209	1			1981-84
	8350 2161	1			1985-86: Black, Paint as Required
10	J813 3210	1			HALO
11	J813 3211	1			WIRE, 1981-84
12	J813 3212	1			HANDLE
13	8350 2851	1			DEFLECTOR, Air, 1986: Without Vinyl Roof Cover
14					SUNSCREEN ***
	8350 1007	1			1984: Almond Beige
	J813 3714	1			1981-83: Beige
	J813 4253	1			1981-84: Black
	8350 2158	1			1985: Garnet
	8350 2157	1			1985-86: Honey
	J813 3715	1			1981-84: Nutmeg
15	J318 6888	AR			CONNECTOR, Splice
16	J813 3215	1			BRACKET
17	J813 3335	2			RETAINER
18	J813 3219	1			MOTOR
19	8350 5583	2			CLIP

MODEL CODES

16=Cherokee 2 Dr.(1981-83)
17=Cherokee 2 Dr.(1981-83)
73=Cherokee 2WD-2 Dr.(1984-86)
74=Cherokee 2WD-4 Dr.(1984-86)
18=Cherokee 4 Dr.(1981-83)
77=Cherokee 4WD-2 Dr.(1984-86)
78=Cherokee 4WD-4 Dr.(1984-86)
85=CJ-5 (1981-83)
86=CJ-6(1981)
87=CJ-7(1981-86)
88=CJ-8, Scrambler(1981-86)
64=Comanche 2WD-6 Ft. Box(1986)
66=Comanche 2WD-7 Ft. Box(1986)
63=Comanche 4WD-6 Ft. Box(1986)
65=Comanche 4WD-7 Ft. Box(1986)
15=Grand Wagoneer 4 Dr.(1984-86)
25=J-10 Truck 7 Ft. Box(1981-84)
26=J10 Truck 8 Ft. Box(1981-86)
27=J-20 Truck 8 Ft. Box(1981-86)
15=Wagoneer 4 Dr.(1981-83)
75=Wagoneer 4WD-4 Dr.(1984-86)

BODY
CJ=CJ-5, CJ-6, CJ-7, CJ-8, Scrambler(1981-86)
MJ=Comanche Pickup(1986)

STYLES
SJ=Wagoneer(1981-83), Grand Wagoneer(1984-86), Cherokee(1981-83), J-10, J-20(1981-86)
XJ=Wagoneer(1984-86), Cherokee(1984-86)

AR = Use as Required - = Non Illustrated Part P.A.R. = Paint as Required

« RETURN TO GROUP INDEX

SUNROOF, POP-UP SJ CHEROKEE, SJ WAGONEER
Figure 23A-8700

81J69 8700

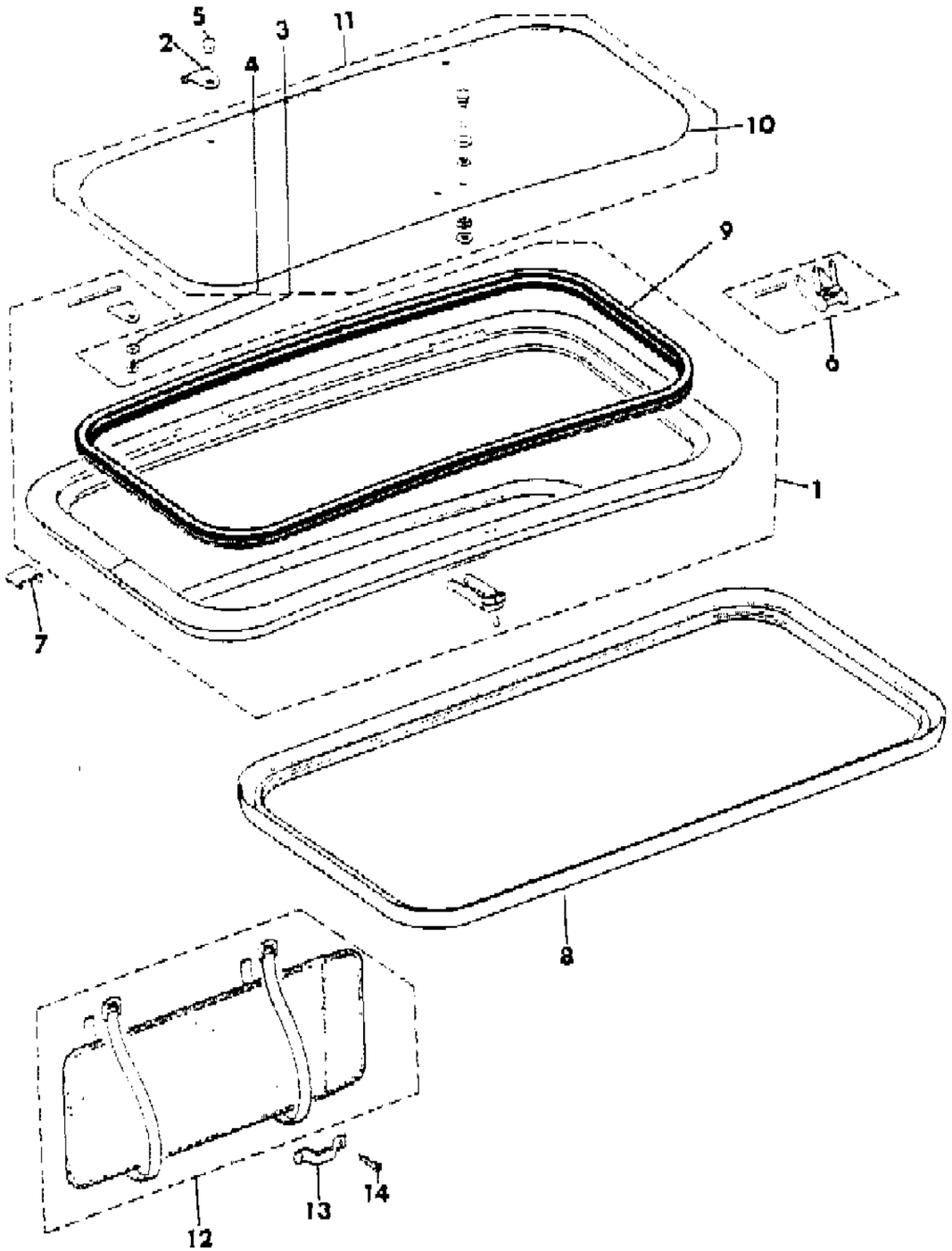

ITEM	PART NUMBER	QTY	BODY	MODEL	DESCRIPTION
1	J813 3032	1			FRAME, Sunroof
2	J813 2683	2			CLIP
3	J813 2685	2			SCREW
4	J813 2684	2			CAP
5	J813 4370	2			CAP
6	J813 2682	1			LATCH PACKAGE, Sunroof
7	J813 2681	1			COVER
8	J813 3577	1			SEAL
9	J813 2679	1			SEAL, Sunroof, Outer
10	J813 2686	1			GLASS, Sunroof
11	J813 2678	1			GLASS PACKAGE, Sunroof ***
12	J575 4619	1			COVER, Sunroof Glass
13	J545 5264	1			LOOP, Footman
14	J016 3470	8			SCREW

MODEL CODES

16=Cherokee 2 Dr.(1981-83)
17=Cherokee 2 Dr.(1981-83)
73=Cherokee 2WD-2 Dr.(1984-86)
74=Cherokee 2WD-4 Dr.(1984-86)
18=Cherokee 4 Dr.(1981-83)
77=Cherokee 4WD-2 Dr.(1984-86)
78=Cherokee 4WD-4 Dr.(1984-86)
85=CJ-5 (1981-83)
86=CJ-6(1981)
87=CJ-7(1981-86)
88=CJ-8, Scrambler(1981-86)
64=Comanche 2WD-6 Ft. Box(1986)
66=Comanche 2WD-7 Ft. Box(1986)
63=Comanche 4WD-6 Ft. Box(1986)
65=Comanche 4WD-7 Ft. Box(1986)
15=Grand Wagoneer 4 Dr.(1984-86)
25=J-10 Truck 7 Ft. Box(1981-84)
26=J10 Truck 8 Ft. Box(1981-86)
27=J-20 Truck 8 Ft. Box(1981-86)
15=Wagoneer 4 Dr.(1981-83)
75=Wagoneer 4WD-4 Dr.(1984-86)

BODY
CJ=CJ-5, CJ-6, CJ-7, CJ-8, Scrambler(1981-86)
MJ=Comanche Pickup(1986)

STYLES
SJ=Wagoneer(1981-83), Grand Wagoneer(1984-86), Cherokee(1981-83), J-10, J-20(1981-86)
XJ=Wagoneer(1984-86), Cherokee(1984-86)

AR = Use as Required - = Non Illustrated Part P.A.R. = Paint as Required

« RETURN TO GROUP INDEX

RUNNING BOARDS SJ CHEROKEE 2 DOOR, MODEL 17
Figure 23A-8800

81J69 8800

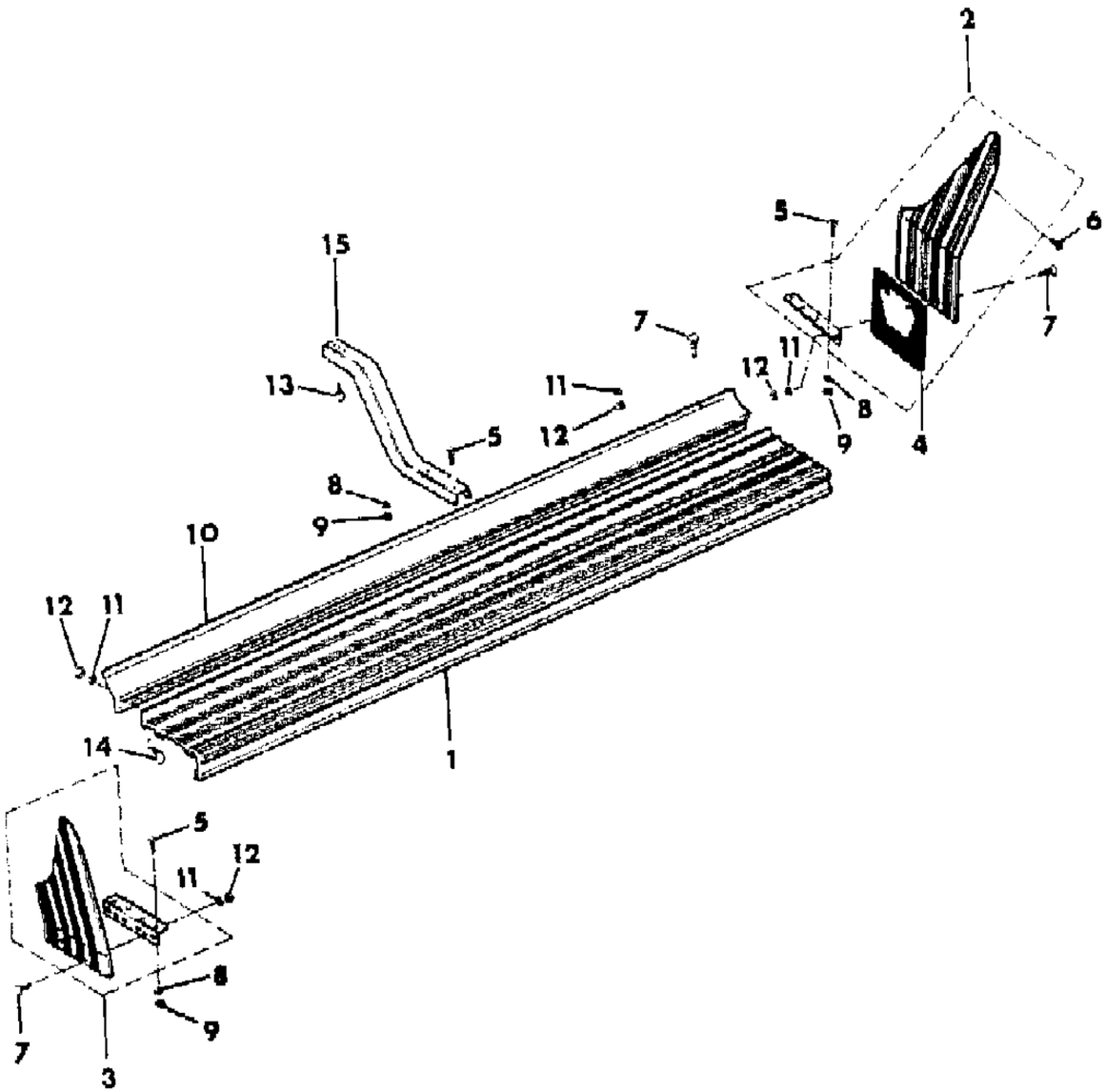

ITEM	PART NUMBER	QTY	BODY	MODEL	DESCRIPTION
1	J813 1236	2			BOARD, Running
2	J813 1244-5	1			GUARD, Splash
3	J813 1246-7	1			GUARD, Splash
4	J813 1242	2			BRACE
5	J018 0078	AR			SCREW
6	J400 5466	AR			SCREW
7	J813 1258	AR			SCREW
8	J012 0214	AR			WASHER
9	J012 0376	AR			NUT
10	J813 1241	2			PLATE
11	J012 0380	AR			WASHER
12	J012 0375	AR			NUT
13	J813 1260	AR			SCREW
14	J813 1259	AR			SCREW
15	J813 1235	2			BRACE

MODEL CODES

16=Cherokee 2 Dr.(1981-83)
17=Cherokee 2 Dr.(1981-83)
73=Cherokee 2WD-2 Dr.(1984-86)
74=Cherokee 2WD-4 Dr.(1984-86)
18=Cherokee 4 Dr.(1981-83)
77=Cherokee 4WD-2 Dr.(1984-86)
78=Cherokee 4WD-4 Dr.(1984-86)
85=CJ-5 (1981-83)
86=CJ-6(1981)
87=CJ-7(1981-86)
88=CJ-8, Scrambler(1981-86)
64=Comanche 2WD-6 Ft. Box(1986)
66=Comanche 2WD-7 Ft. Box(1986)
63=Comanche 4WD-6 Ft. Box(1986)
65=Comanche 4WD-7 Ft. Box(1986)
15=Grand Wagoneer 4 Dr.(1984-86)
25=J-10 Truck 7 Ft. Box(1981-84)
26=J10 Truck 8 Ft. Box(1981-86)
27=J-20 Truck 8 Ft. Box(1981-86)
15=Wagoneer 4 Dr.(1981-83)
75=Wagoneer 4WD-4 Dr.(1984-86)

BODY
CJ=CJ-5, CJ-6, CJ-7, CJ-8, Scrambler(1981-86)
MJ=Comanche Pickup(1986)

STYLES
SJ=Wagoneer(1981-83), Grand Wagoneer(1984-86), Cherokee(1981-83), J-10, J-20(1981-86)
XJ=Wagoneer(1984-86), Cherokee(1984-86)

AR = Use as Required - = Non Illustrated Part P.A.R. = Paint as Required

« RETURN TO GROUP INDEX

CAP, PICKUP, TOWNSIDE J10, J20
Figure 23A-8900

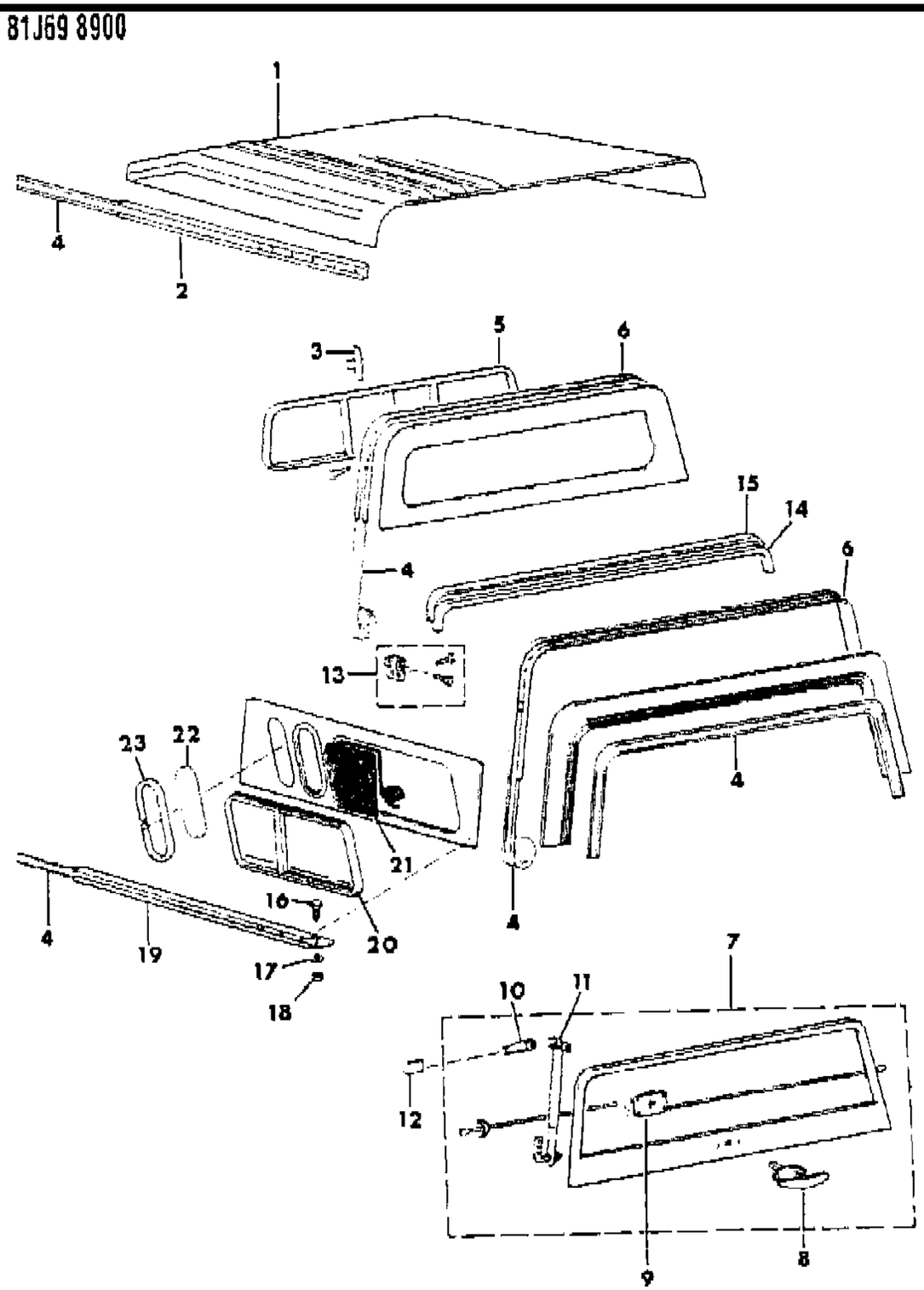

ITEM	PART NUMBER	QTY	BODY	MODEL	DESCRIPTION
1					PANEL, Roof
	J813 1104	1		25	
	J813 1107	1		26,27	
2	J813 1100	2			MOULDING
3	J813 1086	1			HANDLE, Sliding Window
4	J813 1101	2			INSERT KIT ***
5					WINDOW, Front ***
	J813 1084	1			With Sliding Front Wiindow
	J813 1085	1			With Stationary Front Window
6	J813 1099	2			MOULDING
7	J813 1093	1			DOOR, Lift
8	J813 1095	1			HANDLE, Outside
9	J813 1094	1			LATCH, Lift Door
10	J813 1096	1			HANDLE, Inside
11	J813 1098	1			SUPPORT
12	J576 3702	1			SLEEVE
13	J813 1106	1			CLIP KIT ***
14	J813 1105	1			BOW, Roof
15	J813 1167	1			TAPE
16	S018 0080	2			BOLT
17	J400 4894	2			WASHER
18	J400 1845	2			NUT
19					RAIL, Side
	J813 1102-3	1		25	
	J813 1108-9	1		26,27	
20	J813 1088-9	1			WINDOW, Side ***
21	J813 1090-1	1			SCREEN, Window
22	J813 1087	4			GLASS, Fixed
23	J813 1092	4			WEATHERSTRIP

MODEL CODES

16=Cherokee 2 Dr.(1981-83)	78=Cherokee 4WD-4 Dr.(1984-86)	64=Comanche 2WD-6 Ft. Box(1986)	25=J-10 Truck 7 Ft. Box(1981-84)
17=Cherokee 2 Dr.(1981-83)	85=CJ-5 (1981-83)	66=Comanche 2WD-7 Ft. Box(1986)	26=J10 Truck 8 Ft. Box(1981-86)
73=Cherokee 2WD-2 Dr.(1984-86)	86=CJ-6(1981)	63=Comanche 4WD-6 Ft. Box(1986)	27=J-20 Truck 8 Ft. Box(1981-86)
74=Cherokee 2WD-4 Dr.(1984-86)	87=CJ-7(1981-86)	65=Comanche 4WD-7 Ft. Box(1986)	15=Wagoneer 4 Dr.(1981-83)
18=Cherokee 4 Dr.(1981-83)	88=CJ-8, Scrambler(1981-86)	15=Grand Wagoneer 4 Dr.(1984-86)	75=Wagoneer 4WD-4 Dr.(1984-86)
77=Cherokee 4WD-2 Dr.(1984-86)			

BODY
CJ=CJ-5, CJ-6, CJ-7, CJ-8, Scrambler(1981-86)
MJ=Comanche Pickup(1986)

STYLES
SJ=Wagoneer(1981-83), Grand Wagoneer(1984-86), Cherokee(1981-83), J-10, J-20(1981-86)
XJ=Wagoneer(1984-86), Cherokee(1984-86)

AR = Use as Required - = Non Illustrated Part P.A.R. = Paint as Required

« RETURN TO GROUP INDEX

BOX, PICKUP, TOWNSIDE J10, J20
Figure 23A-9000

81J69 9000

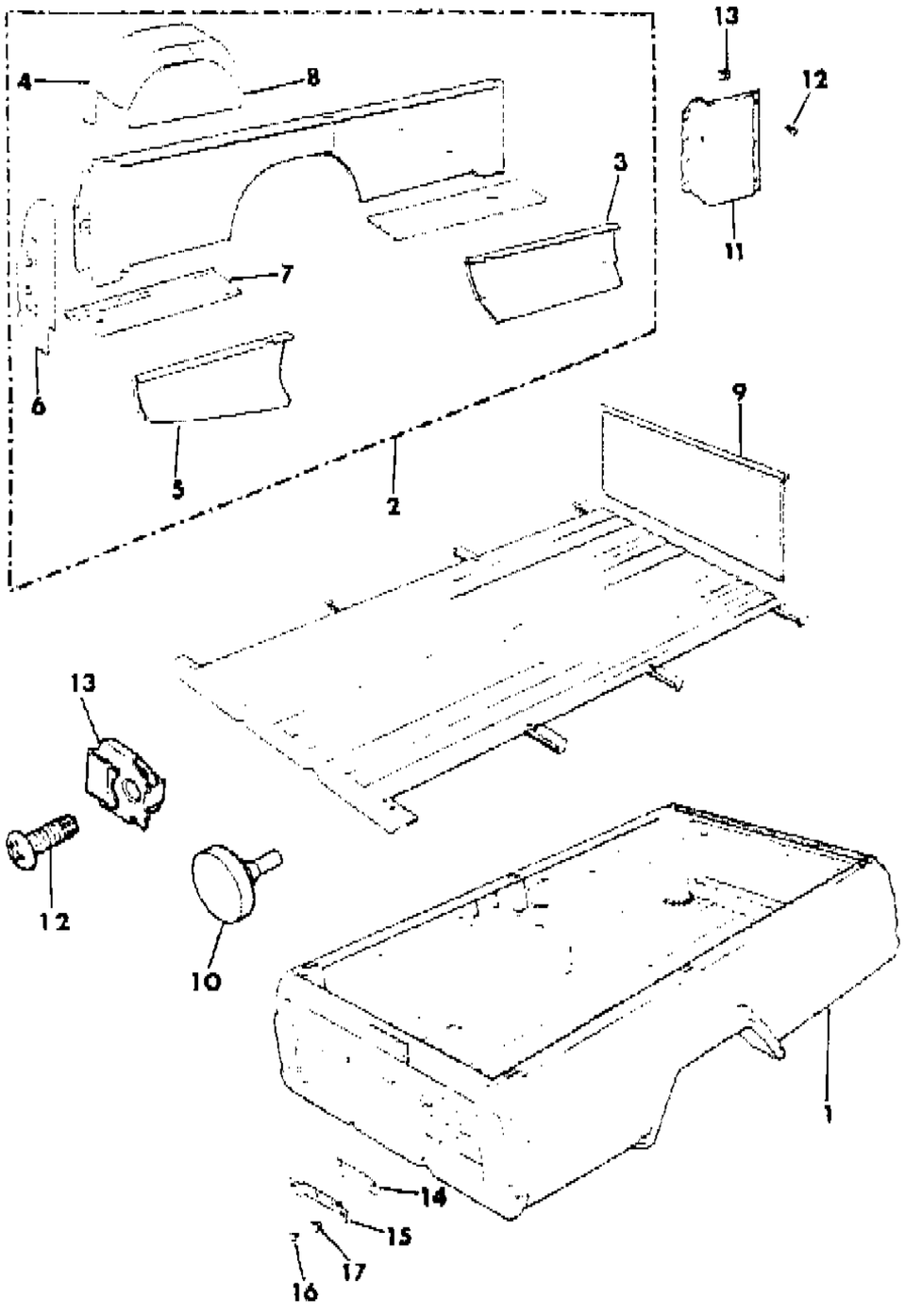

ITEM	PART NUMBER	QTY	BODY	MODEL	DESCRIPTION
1					BOX, Pickup ***
	J575 1162	1		25	
	J575 1163	1		26,27	
2					PANEL, Side Pickup Box
	J545 9774	1		25	Right
	J546 3937	1		25	Left
	J545 9773	1		26,27	Right
	J546 3935	1		26,27	Left
3					PANEL, Body Side Lower
	J095 7182	1		25	Right
	J095 7181	1		25	Left
	J098 1320	1		26,27	Right
	J098 1319	1		26,27	Left
4	J095 7183	2			FENDER, Pickup Box
5					SHIELD, Rear
	J095 7232	1			Right
	J095 7231	1			Left
6					PANEL, Rear
	J545 9746	1			Right
	J545 9745	1			Left
7					EXTENSION, Floor
	J098 8814	1			Right
	J098 8813	1			Left
8	J095 7180	2			PANEL, Wheelhouse Inner
9	J095 7697	1			PANEL, Pickup Box Front
10	J096 8072	2			BUMPER, Stop
11	J546 5051	1			COVER, Fuel Tank Hose
12	S941 5482	7			SCREW
13	J097 2619	4			RETAINER
14	J093 1389	1			BRACKET
15	J575 8832	1			HINGE
16	J400 5466	2			SCREW
17	J400 0141	2			NUT

MODEL CODES

16=Cherokee 2 Dr.(1981-83)
17=Cherokee 2 Dr.(1981-83)
73=Cherokee 2WD-2 Dr.(1984-86)
74=Cherokee 2WD-4 Dr.(1984-86)
18=Cherokee 4 Dr.(1981-83)
77=Cherokee 4WD-2 Dr.(1984-86)
78=Cherokee 4WD-4 Dr.(1984-86)
85=CJ-5 (1981-83)
86=CJ-6(1981)
87=CJ-7(1981-86)
88=CJ-8, Scrambler(1981-86)
64=Comanche 2WD-6 Ft. Box(1986)
66=Comanche 2WD-7 Ft. Box(1986)
63=Comanche 4WD-6 Ft. Box(1986)
65=Comanche 4WD-7 Ft. Box(1986)
15=Grand Wagoneer 4 Dr.(1984-86)
25=J-10 Truck 7 Ft. Box(1981-84)
26=J10 Truck 8 Ft. Box(1981-86)
27=J-20 Truck 8 Ft. Box(1981-86)
15=Wagoneer 4 Dr.(1981-83)
75=Wagoneer 4WD-4 Dr.(1984-86)

BODY
CJ=CJ-5, CJ-6, CJ-7, CJ-8, Scrambler(1981-86)
MJ=Comanche Pickup(1986)

STYLES
SJ=Wagoneer(1981-83), Grand Wagoneer(1984-86), Cherokee(1981-83), J-10, J-20(1981-86)
XJ=Wagoneer(1984-86), Cherokee(1984-86)

AR = Use as Required - = Non Illustrated Part P.A.R. = Paint as Required

« RETURN TO GROUP INDEX

MOUNTING HARDWARE, PICKUP BOX TOWNSIDE J10, J20
Figure 23A-9100

81J69 9100

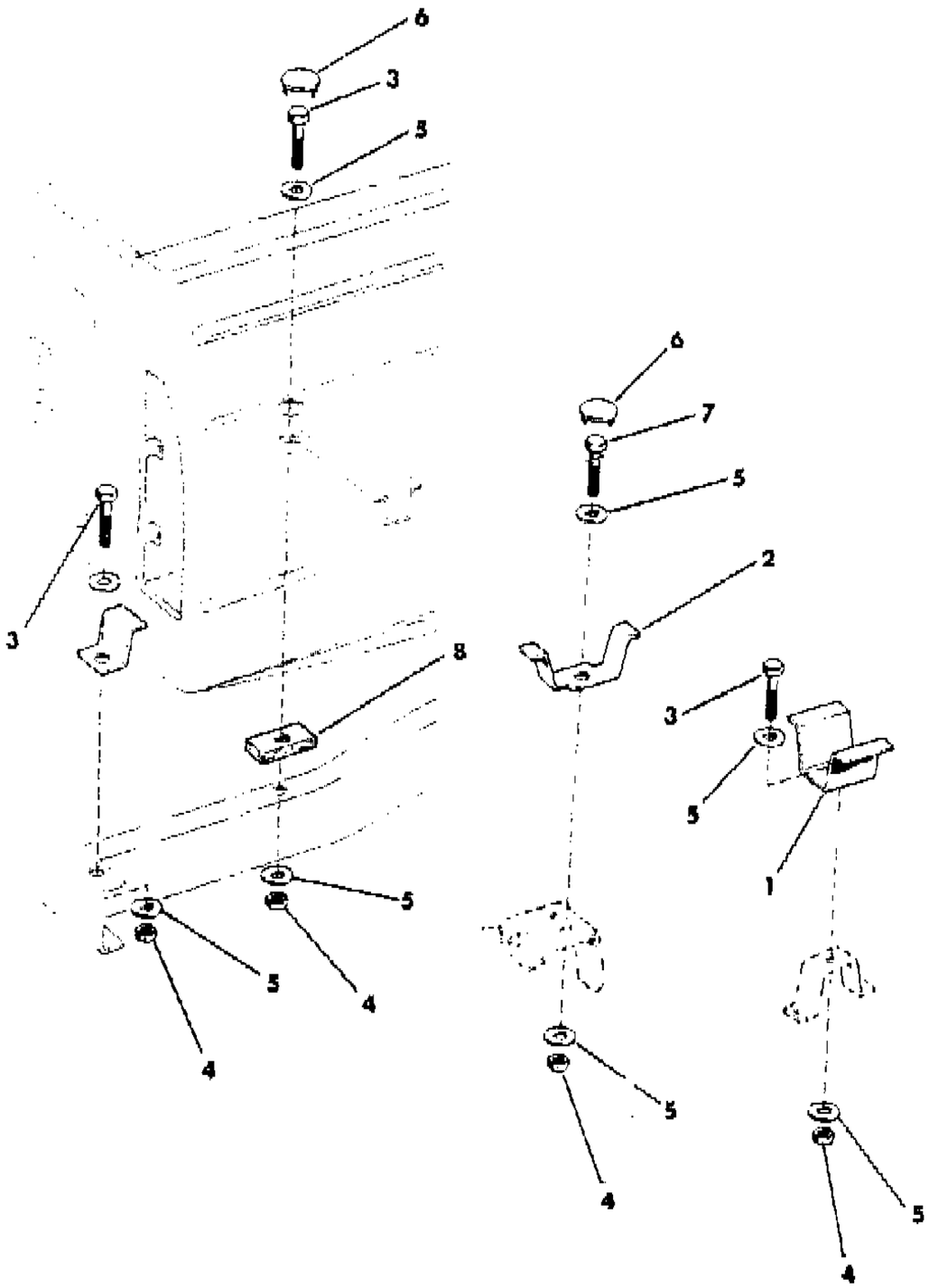

ITEM	PART NUMBER	QTY	BODY	MODEL	DESCRIPTION
1	J095 7538	2			BRACKET
2	J095 9359	2			BRACKET
3	J941 9105	6			BOLT
4	J400 4025	8			NUT, Lock
5	J448 8495	12			WASHER, Flat
6	J400 6453	4			PLUG, Button
7	J400 4935	2			SCREW
8	J067 0540	10			PAD

MODEL CODES

16=Cherokee 2 Dr.(1981-83)
17=Cherokee 2 Dr.(1981-83)
73=Cherokee 2WD-2 Dr.(1984-86)
74=Cherokee 2WD-4 Dr.(1984-86)
18=Cherokee 4 Dr.(1981-83)
77=Cherokee 4WD-2 Dr.(1984-86)
78=Cherokee 4WD-4 Dr.(1984-86)
85=CJ-5 (1981-83)
86=CJ-6(1981)
87=CJ-7(1981-86)
88=CJ-8, Scrambler(1981-86)
64=Comanche 2WD-6 Ft. Box(1986)
66=Comanche 2WD-7 Ft. Box(1986)
63=Comanche 4WD-6 Ft. Box(1986)
65=Comanche 4WD-7 Ft. Box(1986)
15=Grand Wagoneer 4 Dr.(1984-86)
25=J-10 Truck 7 Ft. Box(1981-84)
26=J10 Truck 8 Ft. Box(1981-86)
27=J-20 Truck 8 Ft. Box(1981-86)
15=Wagoneer 4 Dr.(1981-83)
75=Wagoneer 4WD-4 Dr.(1984-86)

BODY
CJ=CJ-5, CJ-6, CJ-7, CJ-8, Scrambler(1981-86)
MJ=Comanche Pickup(1986)

STYLES
SJ=Wagoneer(1981-83), Grand Wagoneer(1984-86), Cherokee(1981-83), J-10, J-20(1981-86)
XJ=Wagoneer(1984-86), Cherokee(1984-86)

AR = Use as Required - = Non Illustrated Part P.A.R. = Paint as Required

« RETURN TO GROUP INDEX

TAILGATE, LATCH AND HINGES TOWNSIDE J10, J20
Figure 23A-9200

81J69 9200

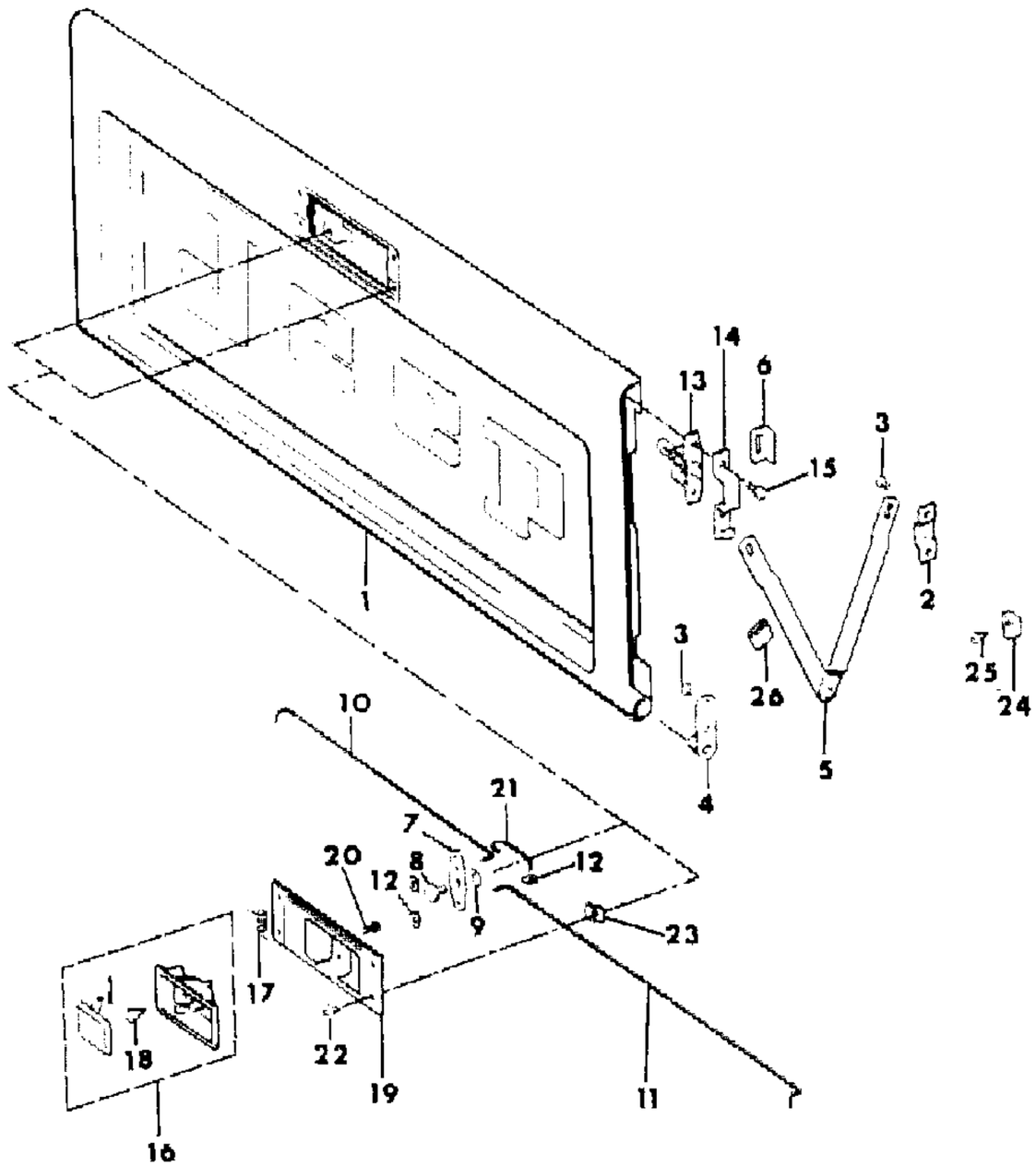

ITEM	PART NUMBER	QTY	BODY	MODEL	DESCRIPTION
1	J098 7818	1			TAILGATE, Pickup Box
2	J098 9434	2			BRACKET, Support
3	J400 4956	8			SCREW
4					HINGE, Tailgate
	J098 9017	1			Right
	J098 7811	1			Left
5	J098 7829	2			ARM, Tailgate Support
6	J575 2451	2			STRIKER, Latch
7	J098 9216	1			BELLCRANK
8	J098 9217	1			BOLT, Shoulder
9	J095 8629	1			WASHER, Spring
10	J098 7825	1			ROD, Latch Release, Left
11	J098 9218	1			ROD, Latch Release, Right
12	J097 0738	3			NUT, Push
13	J098 7824	2			LATCH
14	J098 9349	2			BRACKET, Support
15	J400 4455	4			SCREW
16	J363 1162	1			HANDLE, Tailgate
17	J363 1218	1			SPRING, Handle
18	J400 3110	1			BUMPER
19	J545 0001	1			PLATE, Latch
20	J098 9963	2			SCREW
21	J098 9221	1			ROD
22	J545 0283	4			SCREW
23	J097 2619	4			RETAINER
24	J545 4927	2			BUMPER
25	J400 4590	2			SCREW
26	J096 1095	2			SLEEVE

MODEL CODES

16=Cherokee 2 Dr.(1981-83)
17=Cherokee 2 Dr.(1981-83)
73=Cherokee 2WD-2 Dr.(1984-86)
74=Cherokee 2WD-4 Dr.(1984-86)
18=Cherokee 4 Dr.(1981-83)
77=Cherokee 4WD-2 Dr.(1984-86)
78=Cherokee 4WD-4 Dr.(1984-86)
85=CJ-5 (1981-83)
86=CJ-6(1981)
87=CJ-7(1981-86)
88=CJ-8, Scrambler(1981-86)
64=Comanche 2WD-6 Ft. Box(1986)
66=Comanche 2WD-7 Ft. Box(1986)
63=Comanche 4WD-6 Ft. Box(1986)
65=Comanche 4WD-7 Ft. Box(1986)
15=Grand Wagoneer 4 Dr.(1984-86)
25=J-10 Truck 7 Ft. Box(1981-84)
26=J10 Truck 8 Ft. Box(1981-86)
27=J-20 Truck 8 Ft. Box(1981-86)
15=Wagoneer 4 Dr.(1981-83)
75=Wagoneer 4WD-4 Dr.(1984-86)

BODY
CJ=CJ-5, CJ-6, CJ-7, CJ-8, Scrambler(1981-86)
MJ=Comanche Pickup(1986)

STYLES
SJ=Wagoneer(1981-83), Grand Wagoneer(1984-86), Cherokee(1981-83), J-10, J-20(1981-86)
XJ=Wagoneer(1984-86), Cherokee(1984-86)

AR = Use as Required - = Non Illustrated Part P.A.R. = Paint as Required

« RETURN TO GROUP INDEX

BOX, PICKUP, SPORTSIDE J10
Figure 23A-9300

81J69 9300

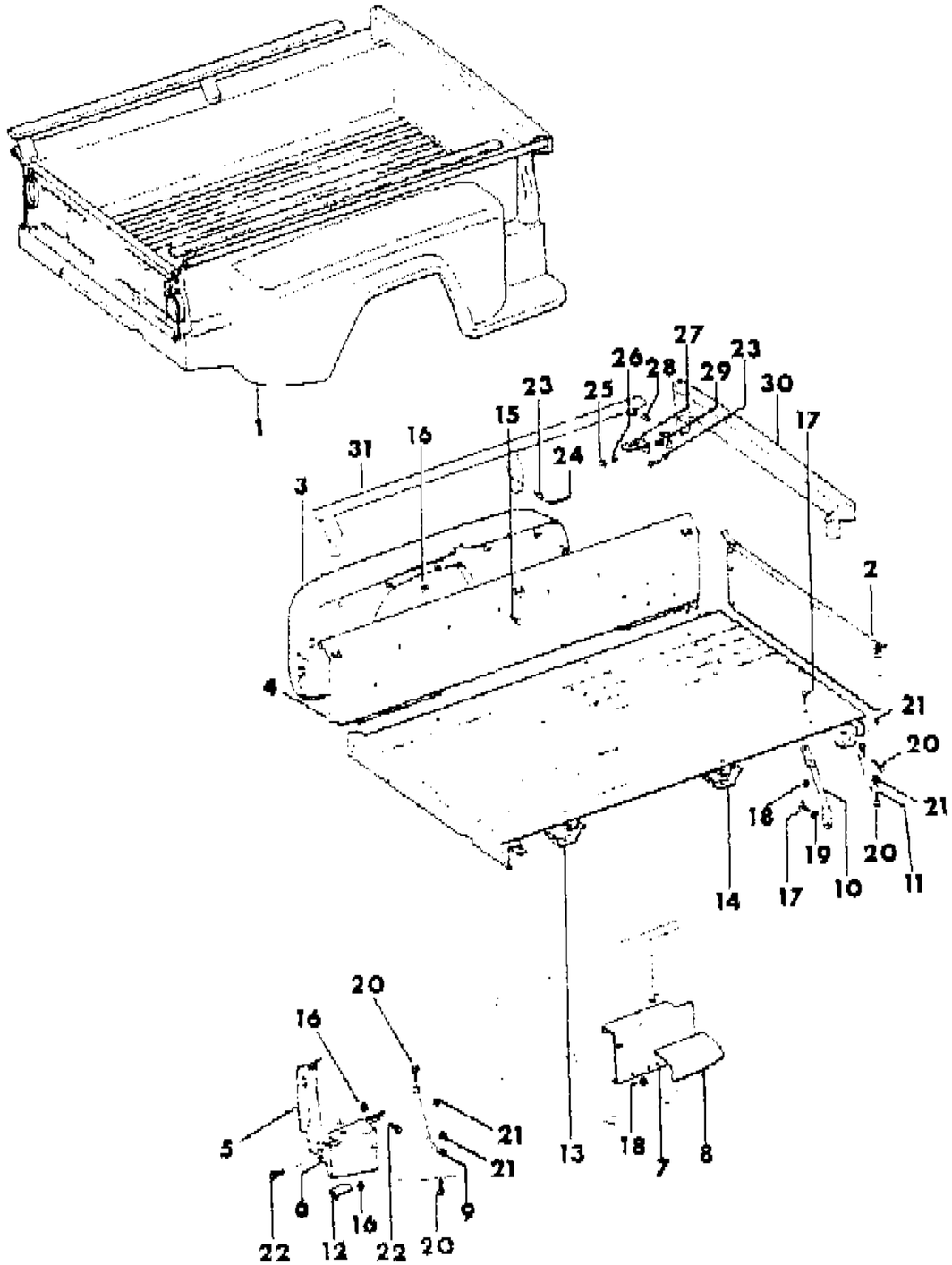

ITEM	PART NUMBER	QTY	BODY	MODEL	DESCRIPTION
1	J575 2320	1			BOX, Pickup ***
2	J095 9055	1			PANEL, Pickup Box Front
3					FENDER, Pickup Box
	J575 2002	1			Right
	J575 2001	1			Left
4	J575 2324-5	1			PANEL, Side
5	J575 2326-7	1			PANEL, Rear
6	J575 2330-1	1			PANEL, Side Lower
7					PANEL, Side Lower
	J575 1998	1			Right
	J575 2329	1			Left
8	J575 2370-1	1			TREAD, Step ***
9	J575 2568-9	1			BRACE
10					BRACKET, Support
	J575 2770	1			Right
	J575 2769	1			Left
11	J575 2006	2			BRACE
12	J095 7927	2			BRACKET, Angle
13	J095 9359	2			BRACKET, Body
14	J575 1862	2			BRACKET, Body
15	J400 6829	32			BOLT
16	J400 4866	32			NUT
17	J400 4626	8			BOLT
18	J400 5895	4			NUT
19	J400 1104	2			WASHER
20	J098 7145	8			BOLT
21	J027 1172	8			NUT
22	J400 4455	4			SCREW
23	J400 6651	AR			SCREW
24	J575 2586	2			KEY
25	S013 1609	2			NUT
26	J400 6823	2			WASHER
27	J575 6162	2			BRACKET
28	J400 6883	2			PIN
29	J575 6174-5	1			BRACKET
30	J575 2542	1			RAIL, Pickup Box Front
31	J575 2558-9	1			RAIL, Pickup Box Side

MODEL CODES
16=Cherokee 2 Dr.(1981-83)
17=Cherokee 2 Dr.(1981-83)
73=Cherokee 2WD-2 Dr.(1984-86)
74=Cherokee 2WD-4 Dr.(1984-86)
18=Cherokee 4 Dr.(1981-83)
77=Cherokee 4WD-2 Dr.(1984-86)
78=Cherokee 4WD-4 Dr.(1984-86)
85=CJ-5 (1981-83)
86=CJ-6(1981)
87=CJ-7(1981-86)
88=CJ-8, Scrambler(1981-86)
64=Comanche 2WD-6 Ft. Box(1986)
66=Comanche 2WD-7 Ft. Box(1986)
63=Comanche 4WD-6 Ft. Box(1986)
65=Comanche 4WD-7 Ft. Box(1986)
15=Grand Wagoneer 4 Dr.(1984-86)
25=J-10 Truck 7 Ft. Box(1981-84)
26=J10 Truck 8 Ft. Box(1981-86)
27=J-20 Truck 8 Ft. Box(1981-86)
15=Wagoneer 4 Dr.(1981-83)
75=Wagoneer 4WD-4 Dr.(1984-86)

BODY
CJ=CJ-5, CJ-6, CJ-7, CJ-8, Scrambler(1981-86)
MJ=Comanche Pickup(1986)

STYLES
SJ=Wagoneer(1981-83), Grand Wagoneer(1984-86), Cherokee(1981-83), J-10, J-20(1981-86)
XJ=Wagoneer(1984-86), Cherokee(1984-86)

AR = Use as Required - = Non Illustrated Part P.A.R. = Paint as Required

« RETURN TO GROUP INDEX

MOUNTING HARDWARE, PICKUP BOX SPORTSIDE J10
Figure 23A-9400

81J69 9400

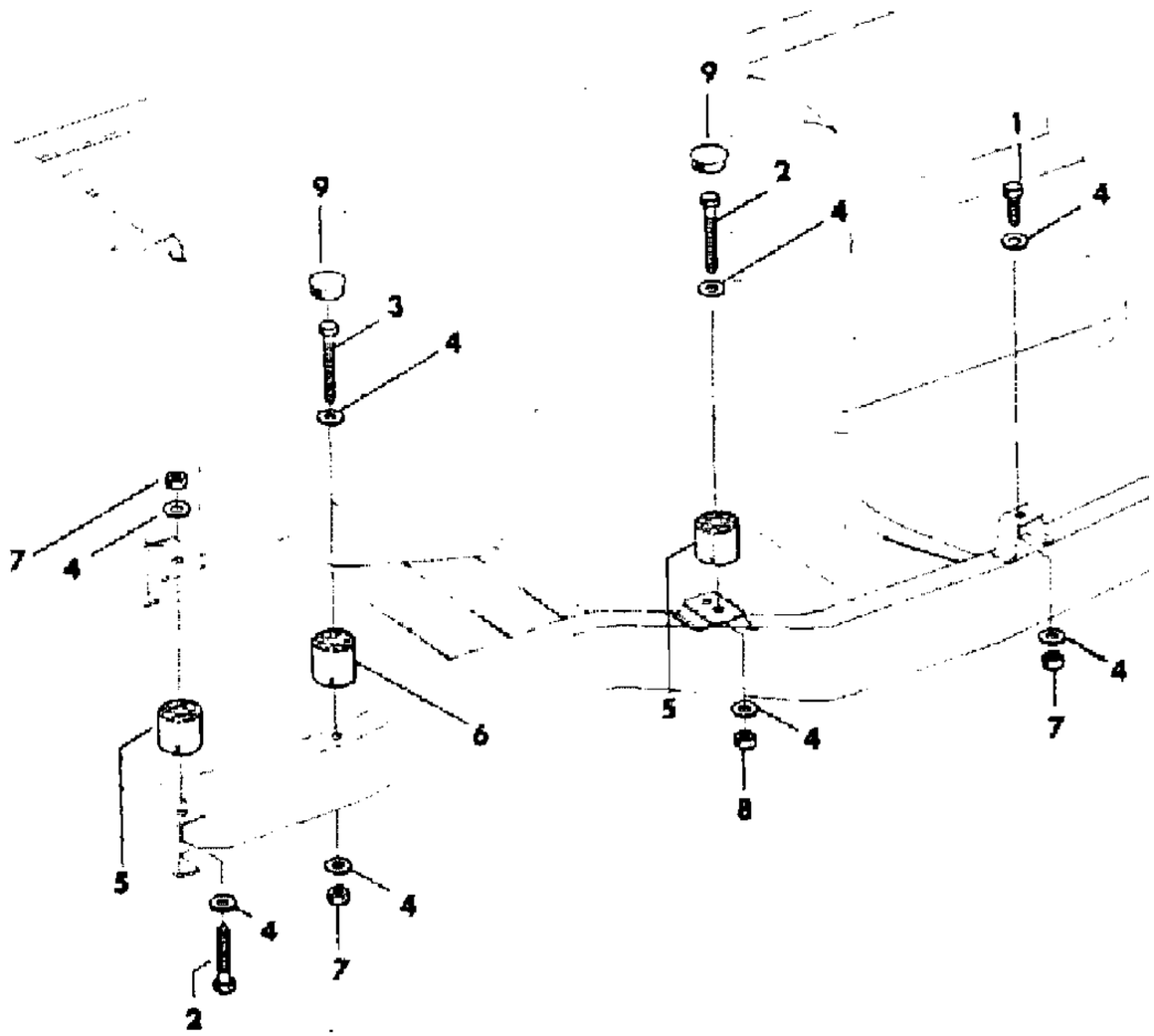

ITEM	PART NUMBER	QTY	BODY	MODEL	DESCRIPTION
1	J941 9105	2			BOLT
2	J400 6620	4			BOLT
3	S941 9114	2			BOLT
4	J448 8495	14			WASHER
5	J575 2007	4			SPACER
6	J575 2008	2			SPACER
7	J400 4025	6			NUT
8	J027 2122	2			NUT
9	J400 6453	4			PLUG

MODEL CODES

16=Cherokee 2 Dr.(1981-83)
17=Cherokee 2 Dr.(1981-83)
73=Cherokee 2WD-2 Dr.(1984-86)
74=Cherokee 2WD-4 Dr.(1984-86)
18=Cherokee 4 Dr.(1981-83)
77=Cherokee 4WD-2 Dr.(1984-86)
78=Cherokee 4WD-4 Dr.(1984-86)
85=CJ-5 (1981-83)
86=CJ-6(1981)
87=CJ-7(1981-86)
88=CJ-8, Scrambler(1981-86)
64=Comanche 2WD-6 Ft. Box(1986)
66=Comanche 2WD-7 Ft. Box(1986)
63=Comanche 4WD-6 Ft. Box(1986)
65=Comanche 4WD-7 Ft. Box(1986)
15=Grand Wagoneer 4 Dr.(1984-86)
25=J-10 Truck 7 Ft. Box(1981-84)
26=J10 Truck 8 Ft. Box(1981-86)
27=J-20 Truck 8 Ft. Box(1981-86)
15=Wagoneer 4 Dr.(1981-83)
75=Wagoneer 4WD-4 Dr.(1984-86)

BODY
CJ=CJ-5, CJ-6, CJ-7, CJ-8, Scrambler(1981-86)
MJ=Comanche Pickup(1986)

STYLES
SJ=Wagoneer(1981-83), Grand Wagoneer(1984-86), Cherokee(1981-83), J-10, J-20(1981-86)
XJ=Wagoneer(1984-86), Cherokee(1984-86)

AR = Use as Required - = Non Illustrated Part P.A.R. = Paint as Required

« RETURN TO GROUP INDEX

TAILGATE, LATCH AND HINGES SPORTSIDE J10
Figure 23A-9500

81J69 9500

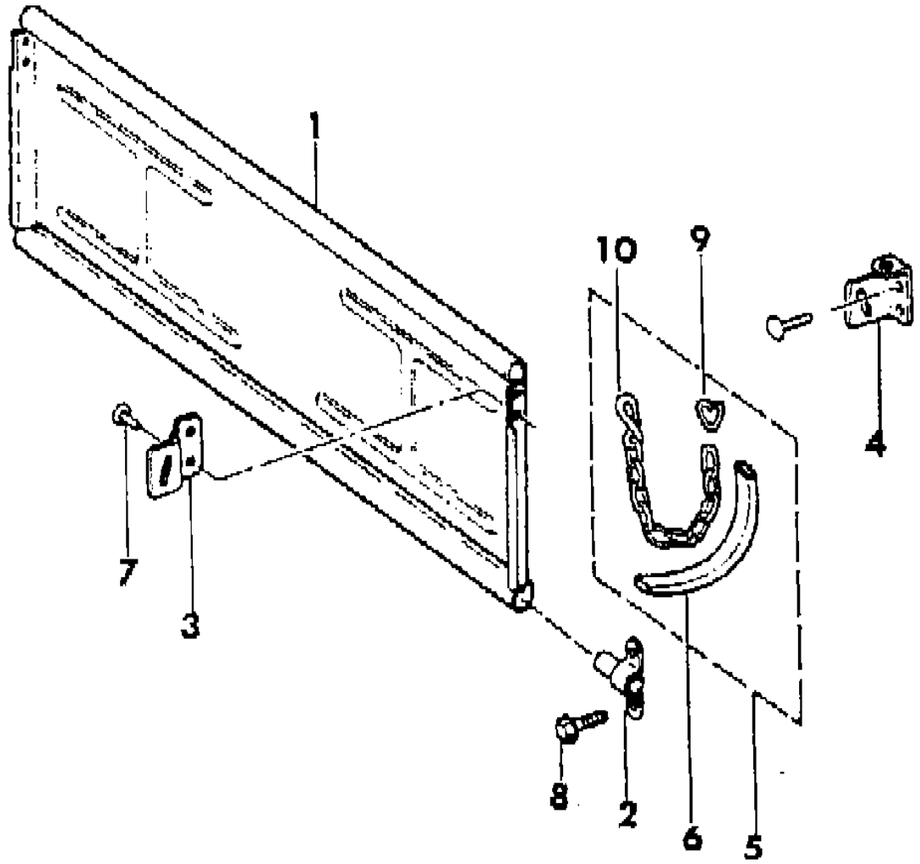

ITEM	PART NUMBER	QTY	BODY	MODEL	DESCRIPTION
1	J066 6039	1			TAILGATE, Pickup Box
2	J081 7307	1			HINGE, Tailgate
3					LOCK
	J065 1598	1			Right
	J065 1597	1			Left
4					LOCK
	J065 1592	1			Right
	J065 1591	1			Left
5	J575 2480-1	1			CHAIN ASSEMBLY ***
6	J575 2475	2			COVER
7	S010 4250	4			RIVET
8	J400 4455	4			SCREW
9	J065 1593	2			LINK
10	J575 2482-3	1			CHAIN

MODEL CODES
16=Cherokee 2 Dr.(1981-83)
17=Cherokee 2 Dr.(1981-83)
73=Cherokee 2WD-2 Dr.(1984-86)
74=Cherokee 2WD-4 Dr.(1984-86)
18=Cherokee 4 Dr.(1981-83)
77=Cherokee 4WD-2 Dr.(1984-86)
78=Cherokee 4WD-4 Dr.(1984-86)
85=CJ-5 (1981-83)
86=CJ-6(1981)
87=CJ-7(1981-86)
88=CJ-8, Scrambler(1981-86)
64=Comanche 2WD-6 Ft. Box(1986)
66=Comanche 2WD-7 Ft. Box(1986)
63=Comanche 4WD-6 Ft. Box(1986)
65=Comanche 4WD-7 Ft. Box(1986)
15=Grand Wagoneer 4 Dr.(1984-86)
25=J-10 Truck 7 Ft. Box(1981-84)
26=J10 Truck 8 Ft. Box(1981-86)
27=J-20 Truck 8 Ft. Box(1981-86)
15=Wagoneer 4 Dr.(1981-83)
75=Wagoneer 4WD-4 Dr.(1984-86)

BODY
CJ=CJ-5, CJ-6, CJ-7, CJ-8, Scrambler(1981-86)
MJ=Comanche Pickup(1986)

STYLES
SJ=Wagoneer(1981-83), Grand Wagoneer(1984-86), Cherokee(1981-83), J-10, J-20(1981-86)
XJ=Wagoneer(1984-86), Cherokee(1984-86)

AR = Use as Required - = Non Illustrated Part P.A.R. = Paint as Required

« RETURN TO GROUP INDEX

SPORTBAR TOWNSIDE, SPORTSIDE J10, J20
Figure 23A-9600

81J69 9600

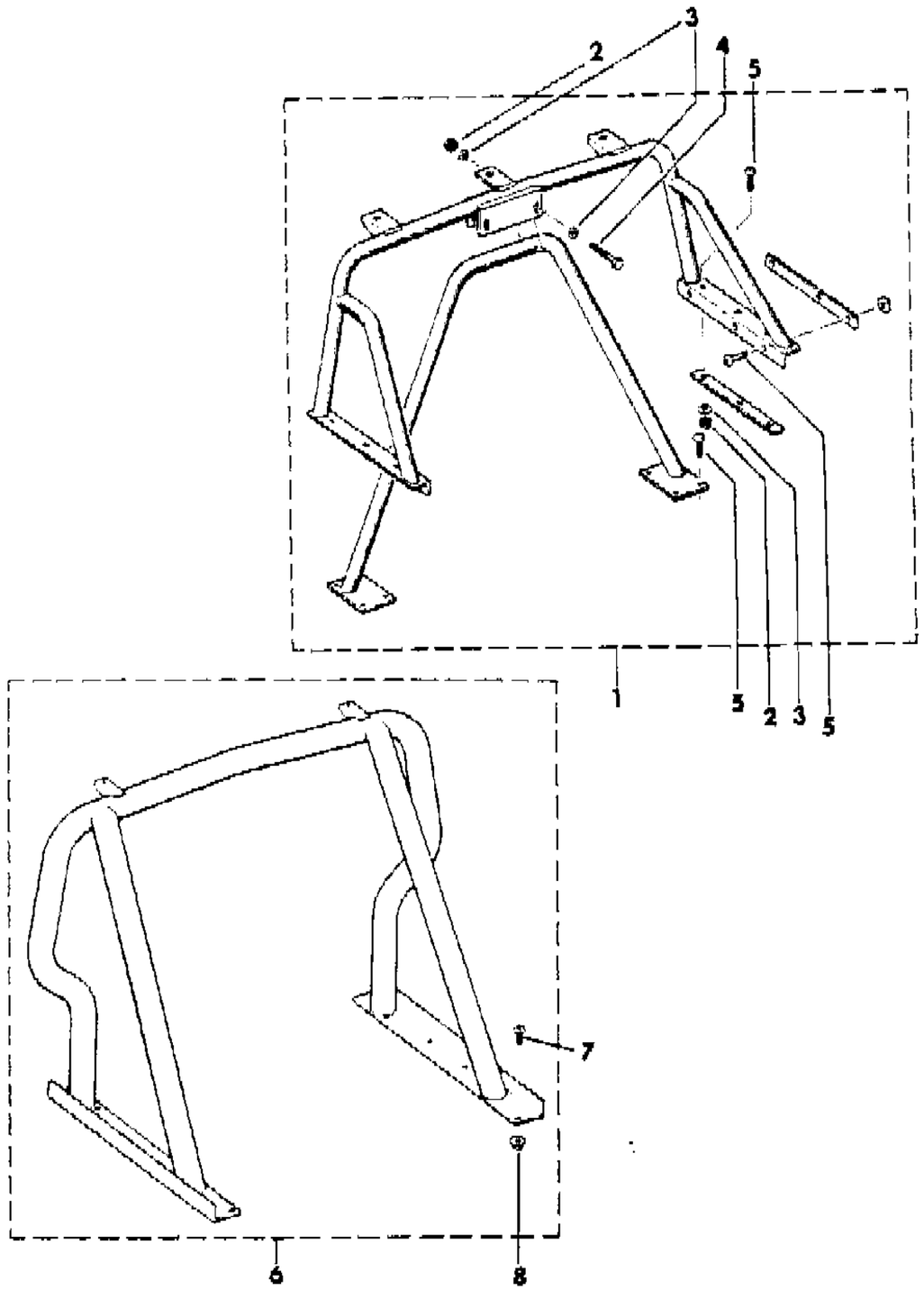

ITEM	PART NUMBER	QTY	BODY	MODEL	DESCRIPTION
1	J207 3309	1			SPORT BAR, Townside ***
2	J400 5895	AR			NUT
3	J400 1104	AR			WASHER
4	J018 9303	2			BOLT
5	J400 5651	AR			BOLT
6	J207 3313	1			SPORT BAR, Sportside ***
7	J400 5651	AR			BOLT
8	J400 5895	AR			NUT

MODEL CODES

16=Cherokee 2 Dr.(1981-83)
17=Cherokee 2 Dr.(1981-83)
73=Cherokee 2WD-2 Dr.(1984-86)
74=Cherokee 2WD-4 Dr.(1984-86)
18=Cherokee 4 Dr.(1981-83)
77=Cherokee 4WD-2 Dr.(1984-86)
78=Cherokee 4WD-4 Dr.(1984-86)
85=CJ-5 (1981-83)
86=CJ-6(1981)
87=CJ-7(1981-86)
88=CJ-8, Scrambler(1981-86)
64=Comanche 2WD-6 Ft. Box(1986)
66=Comanche 2WD-7 Ft. Box(1986)
63=Comanche 4WD-6 Ft. Box(1986)
65=Comanche 4WD-7 Ft. Box(1986)
15=Grand Wagoneer 4 Dr.(1984-86)
25=J-10 Truck 7 Ft. Box(1981-84)
26=J10 Truck 8 Ft. Box(1981-86)
27=J-20 Truck 8 Ft. Box(1981-86)
15=Wagoneer 4 Dr.(1981-83)
75=Wagoneer 4WD-4 Dr.(1984-86)

BODY
CJ=CJ-5, CJ-6, CJ-7, CJ-8, Scrambler(1981-86)
MJ=Comanche Pickup(1986)

STYLES
SJ=Wagoneer(1981-83), Grand Wagoneer(1984-86), Cherokee(1981-83), J-10, J-20(1981-86)
XJ=Wagoneer(1984-86), Cherokee(1984-86)

AR = Use as Required - = Non Illustrated Part P.A.R. = Paint as Required

« RETURN TO GROUP INDEX

SOFT TOP AND HARDWARE TOWNSIDE, SPORTSIDE J10, J20
Figure 23A-9700

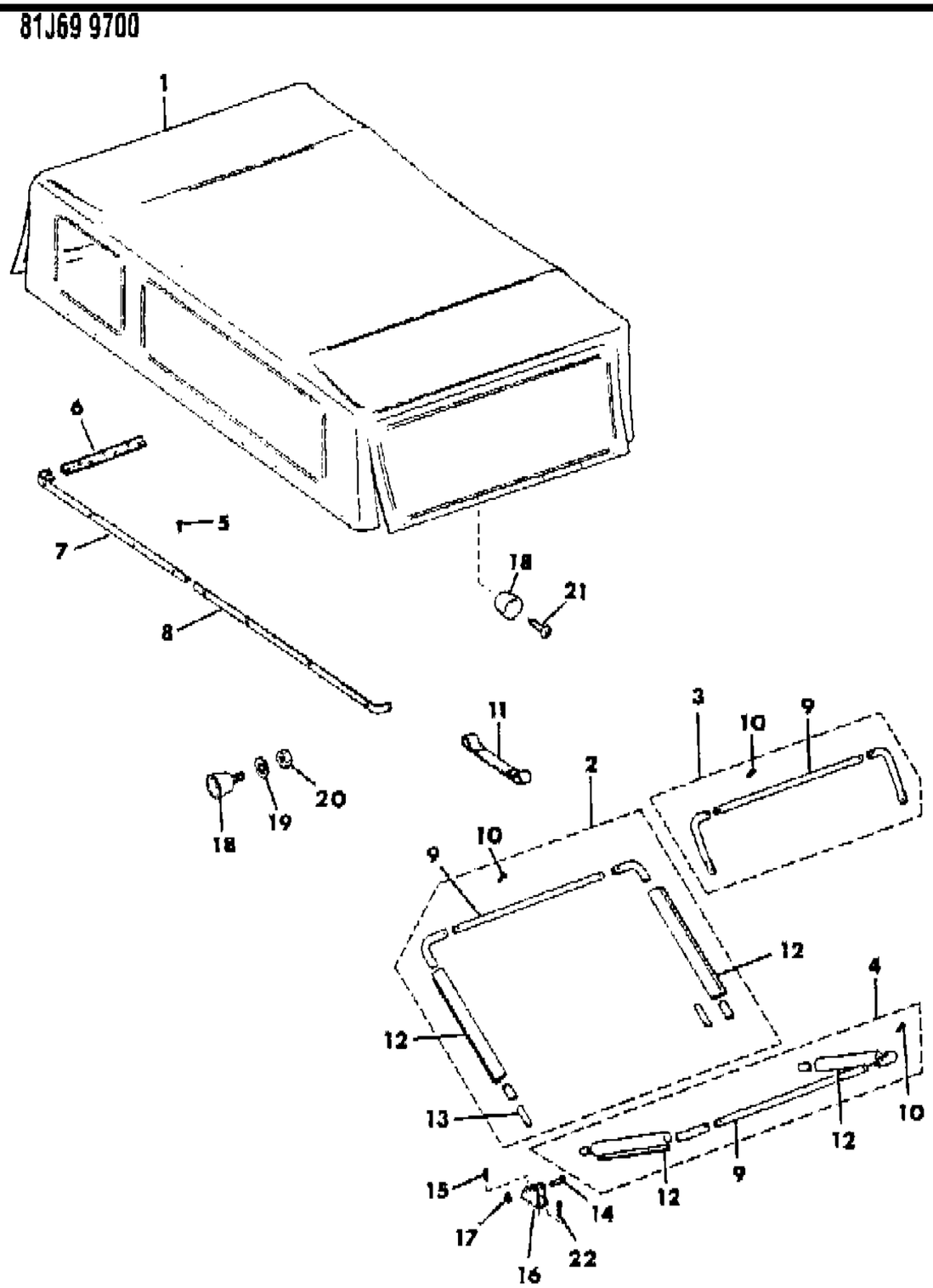

ITEM	PART NUMBER	QTY	BODY	MODEL	DESCRIPTION
1					TOP, Soft
	J812 3944	1		25	7ft Pickup Box
	J812 3977	1		26,27	8ft Pickup Box
2					BOW ASSEMBLY, Front ***
	J812 3967	1		25	7ft Pickup Box
	J812 3979	1		26,27	8ft Pickup Box
3					BOW ASSEMBLY, Center ***
	J812 3970	2		25	7ft Pickup Box
	J812 3982	2		26,27	8ft Pickup Box
4					BOW ASSEMBLY, Rear ***
	J812 3972	1		25	7ft Pickup Box
	J812 3984	1		26,27	8ft Pickup Box
5					SCREW
	S016 1895	AR		25	7ft Pickup Box
	J207 4029	AR		26,27	8ft Pickup Box
6	J812 3958	2			RETAINER, Front
7					RETAINER, Side Belt Rail, Front
	J812 3961	1		25	Right, 7ft Pickup Box
	J812 3964	1		26,27	Right, 8ft Pickup Box
	J812 3959	1		25	Left, 7ft Pickup Box
	J812 3960	1		26,27	Left, 8ft Pickup Box
8					RETAINER, Side Belt Rail, Rear
	J812 3959	1		25	Right, 7ft Pickup Box
	J812 3960	1		26,27	Right, 8ft Pickup Box
	J812 3961	1		25	Left, 7ft Pickup Box
	J812 3964	1		26,27	Left, 8ft Pickup Box
9	J812 3965	4			TUBE
10	J207 4029	AR			SCREW
11					STRAP
	J812 3973	4		25	7ft Pickup Box
	J812 3985	4		26,27	8ft Pickup Box
12					COVER, Roof Bow
					Front
	J812 3974	2		25	7ft Pickup Box
	J812 3986	2		26,27	8ft Pickup Box
					Rear
	J812 3975	2		25	7ft Pickup Box
	J812 3987	2		26,27	8ft Pickup Box
13	J812 3976	2			EXTENSION, Roof Bow

MODEL CODES

16=Cherokee 2 Dr.(1981-83)	78=Cherokee 4WD-4 Dr.(1984-86)	64=Comanche 2WD-6 Ft. Box(1986)	25=J-10 Truck 7 Ft. Box(1981-84)
17=Cherokee 2 Dr.(1981-83)	85=CJ-5 (1981-83)	66=Comanche 2WD-7 Ft. Box(1986)	26=J10 Truck 8 Ft. Box(1981-86)
73=Cherokee 2WD-2 Dr.(1984-86)	86=CJ-6(1981)	63=Comanche 4WD-6 Ft. Box(1986)	27=J-20 Truck 8 Ft. Box(1981-86)
74=Cherokee 2WD-4 Dr.(1984-86)	87=CJ-7(1981-86)	65=Comanche 4WD-7 Ft. Box(1986)	15=Wagoneer 4 Dr.(1981-83)
18=Cherokee 4 Dr.(1981-83)	88=CJ-8, Scrambler(1981-86)	15=Grand Wagoneer 4 Dr.(1984-86)	75=Wagoneer 4WD-4 Dr.(1984-86)
77=Cherokee 4WD-2 Dr.(1984-86)			

BODY
CJ=CJ-5, CJ-6, CJ-7, CJ-8, Scrambler(1981-86)
MJ=Comanche Pickup(1986)

STYLES
SJ=Wagoneer(1981-83), Grand Wagoneer(1984-86), Cherokee(1981-83), J-10, J-20(1981-86)
XJ=Wagoneer(1984-86), Cherokee(1984-86)

AR = Use as Required - = Non Illustrated Part P.A.R. = Paint as Required

« RETURN TO GROUP INDEX »

SOFT TOP AND HARDWARE TOWNSIDE, SPORTSIDE J10, J20
Figure 23A-9700

81J69 9700

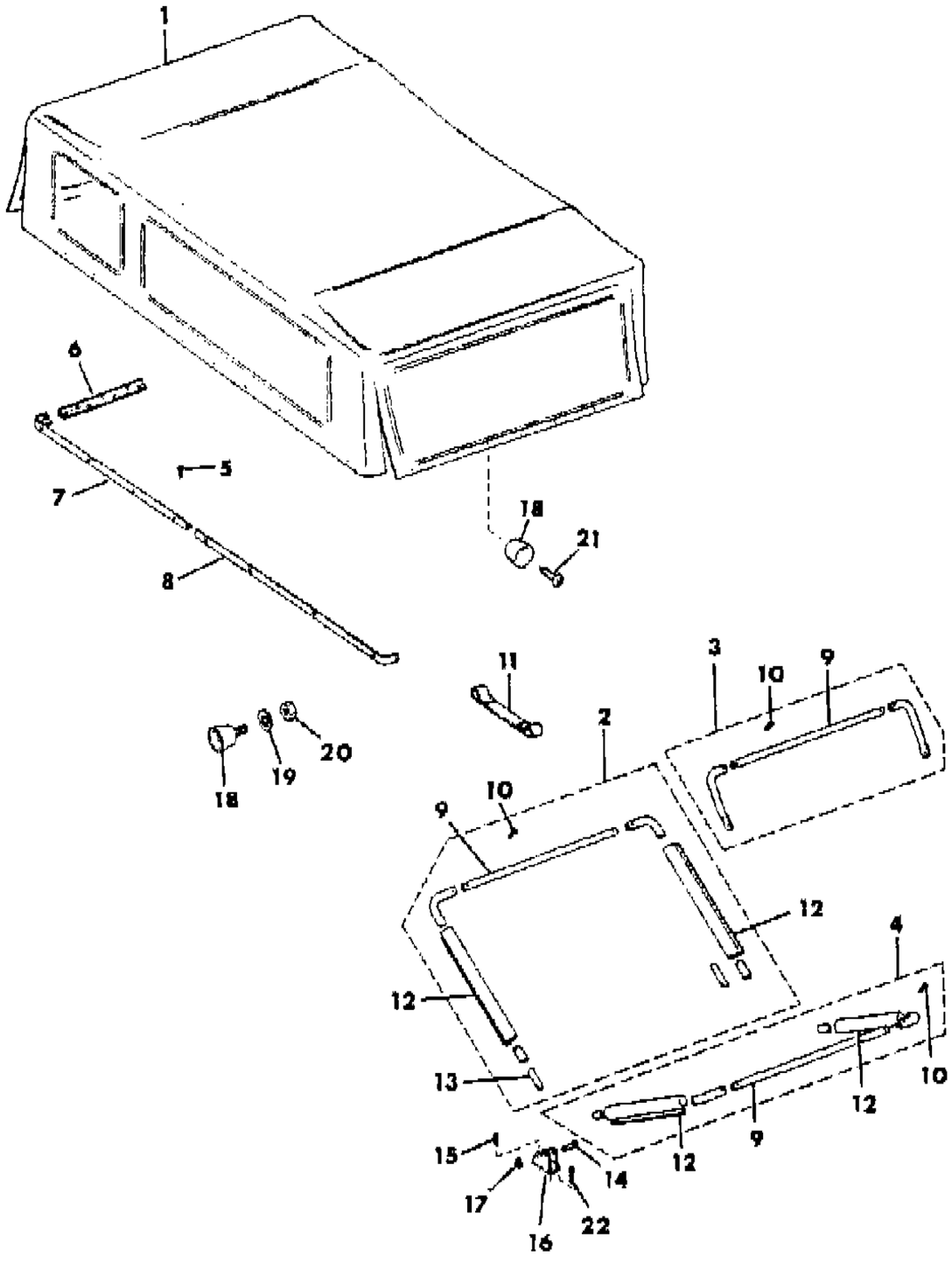

ITEM	PART NUMBER	QTY	BODY	MODEL	DESCRIPTION
14	J812 3727	4			PIN
15	J812 3598	AR			SCREW
16	J545 6478	2			BRACKET
17	J207 7031	AR			RING
18	J812 3724	AR			STUD
19	S012 1801	AR			WASHER, Lock
20	S012 0361	AR			NUT
21	J812 3723	AR			SCREW
22	S016 1895	4			SCREW

MODEL CODES

16=Cherokee 2 Dr.(1981-83)
17=Cherokee 2 Dr.(1981-83)
73=Cherokee 2WD-2 Dr.(1984-86)
74=Cherokee 2WD-4 Dr.(1984-86)
18=Cherokee 4 Dr.(1981-83)
77=Cherokee 4WD-2 Dr.(1984-86)
78=Cherokee 4WD-4 Dr.(1984-86)
85=CJ-5 (1981-83)
86=CJ-6(1981)
87=CJ-7(1981-86)
88=CJ-8, Scrambler(1981-86)
64=Comanche 2WD-6 Ft. Box(1986)
66=Comanche 2WD-7 Ft. Box(1986)
63=Comanche 4WD-6 Ft. Box(1986)
65=Comanche 4WD-7 Ft. Box(1986)
15=Grand Wagoneer 4 Dr.(1984-86)
25=J-10 Truck 7 Ft. Box(1981-84)
26=J10 Truck 8 Ft. Box(1981-86)
27=J-20 Truck 8 Ft. Box(1981-86)
15=Wagoneer 4 Dr.(1981-83)
75=Wagoneer 4WD-4 Dr.(1984-86)

BODY
CJ=CJ-5, CJ-6, CJ-7, CJ-8, Scrambler(1981-86)
MJ=Comanche Pickup(1986)

STYLES
SJ=Wagoneer(1981-83), Grand Wagoneer(1984-86), Cherokee(1981-83), J-10, J-20(1981-86)
XJ=Wagoneer(1984-86), Cherokee(1984-86)

AR = Use as Required - = Non Illustrated Part P.A.R. = Paint as Required

« RETURN TO GROUP INDEX

SOFT TOP AND HARDWARE TOWNSIDE, SPORTSIDE J10, J20
Figure 23A-9700

81J69 9800

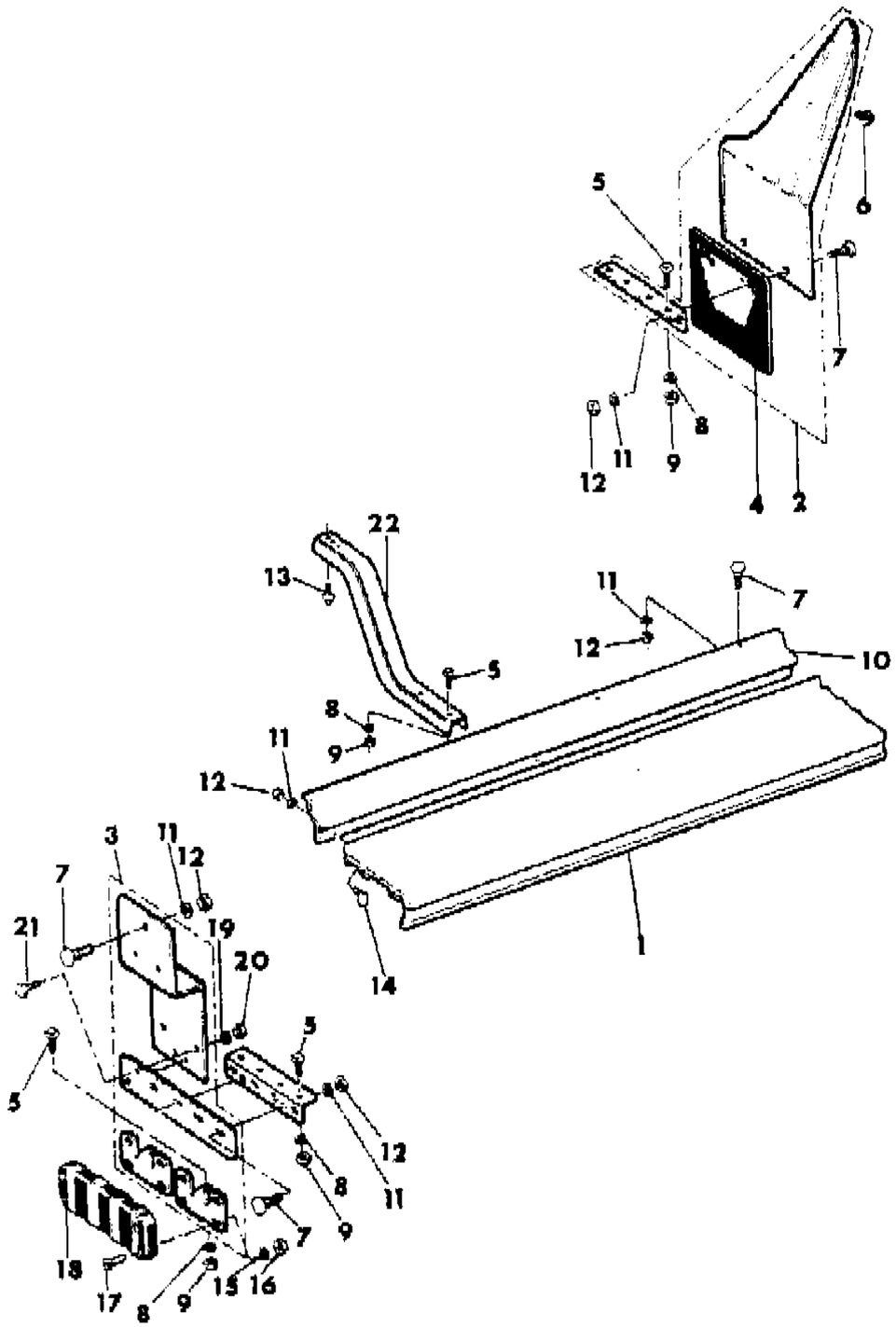

ITEM	PART NUMBER	QTY	BODY	MODEL	DESCRIPTION
1	J813 1233	2			BOARD, Running
2	J813 1238-9	AR			GUARD, Splash
3	J813 1237	2			BRACKET ASSEMBLY ***
4	J813 1242	2			BRACE
5	J018 0078	AR			SCREW
6	J400 5466	AR			SCREW
7	J813 1258	AR			SCREW
8	J012 0214	AR			WASHER
9	J012 0376	AR			NUT
10	J813 1240	2			PLATE
11	J012 0380	AR			WASHER
12	J012 0375	AR			NUT
13	J813 1260	AR			SCREW
14	J813 1259	AR			SCREW
15	J012 0217	AR			WASHER
16	J012 0361	AR			NUT
17	J813 1261	AR			RIVET
18	J813 1234	2			CAP
19	J012 0383	AR			WASHER
20	J027 1501	1			NUT
21	J018 0145	AR			BRACKET
22	J813 1235	AR			BRACKET

MODEL CODES

16=Cherokee 2 Dr.(1981-83)
17=Cherokee 2 Dr.(1981-83)
73=Cherokee 2WD-2 Dr.(1984-86)
74=Cherokee 2WD-4 Dr.(1984-86)
18=Cherokee 4 Dr.(1981-83)
77=Cherokee 4WD-2 Dr.(1984-86)
78=Cherokee 4WD-4 Dr.(1984-86)
85=CJ-5 (1981-83)
86=CJ-6(1981)
87=CJ-7(1981-86)
88=CJ-8, Scrambler(1981-86)
64=Comanche 2WD-6 Ft. Box(1986)
66=Comanche 2WD-7 Ft. Box(1986)
63=Comanche 4WD-6 Ft. Box(1986)
65=Comanche 4WD-7 Ft. Box(1986)
15=Grand Wagoneer 4 Dr.(1984-86)
25=J-10 Truck 7 Ft. Box(1981-84)
26=J10 Truck 8 Ft. Box(1981-86)
27=J-20 Truck 8 Ft. Box(1981-86)
15=Wagoneer 4 Dr.(1981-83)
75=Wagoneer 4WD-4 Dr.(1984-86)

BODY

CJ=CJ-5, CJ-6, CJ-7, CJ-8, Scrambler(1981-86)
MJ=Comanche Pickup(1986)

STYLES

SJ=Wagoneer(1981-83), Grand Wagoneer(1984-86), Cherokee(1981-83), J-10, J-20(1981-86)
XJ=Wagoneer(1984-86), Cherokee(1984-86)

AR = Use as Required - = Non Illustrated Part P.A.R. = Paint as Required

« RETURN TO GROUP INDEX

LABELS MISCELLANEOUS BODY CJ-5,6,7,8, SCRAMBLER
Figure 23A-9900

81J69 9900

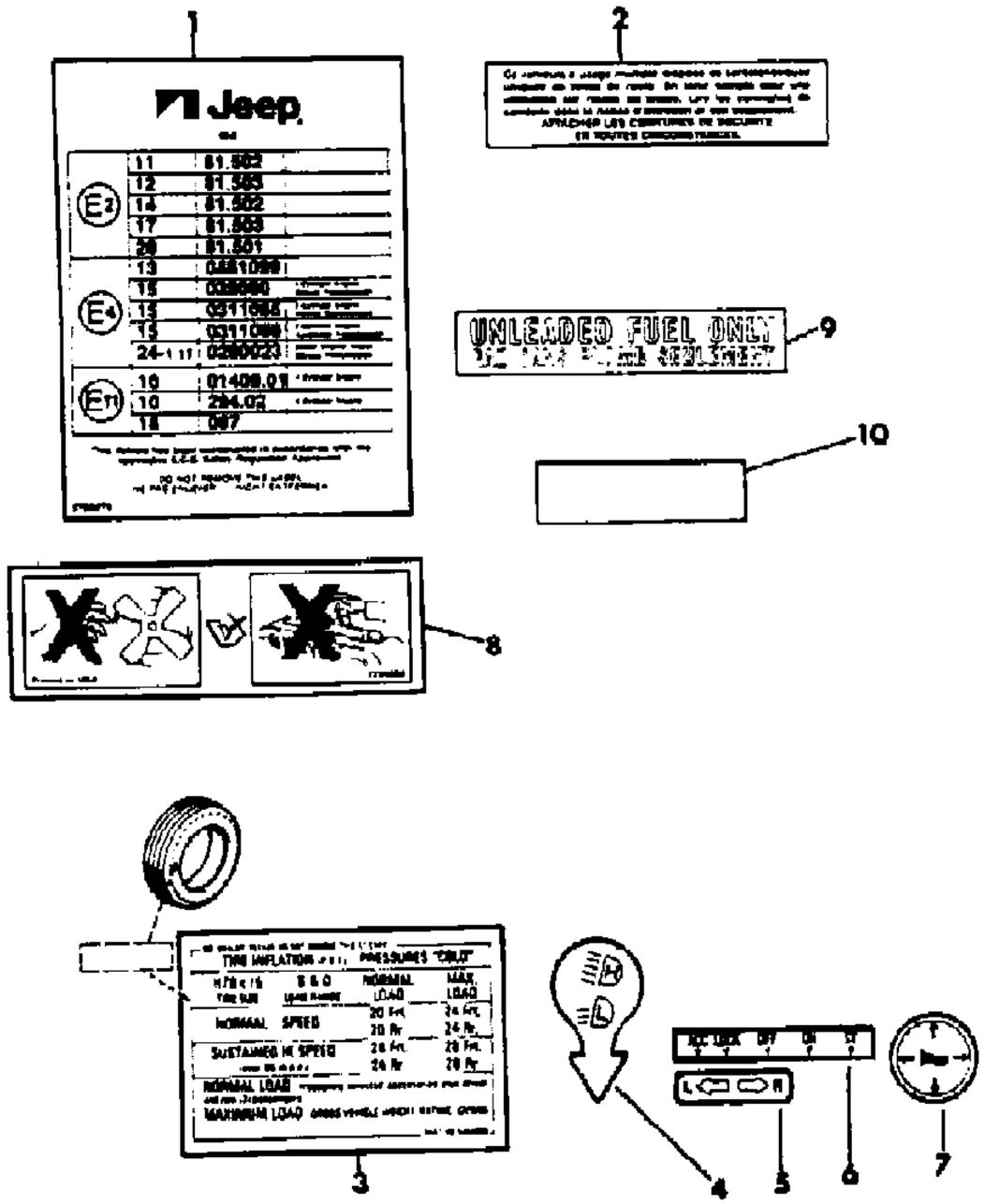

ITEM	PART NUMBER	QTY	BODY	MODEL	DESCRIPTION
1					LABEL, E Mark, EXPORT
	J576 2575	1			1982
	J576 4140	1			1983
	J576 4780	1			1984-86
2					LABEL, Vehicle Advisory
	J576 4193	1			English
	J576 2323	1			French
3					LABEL, Tire Pressure
					H78x15
	J535 4048	1			1981-83
					L78x15
	J535 7641	1			1981-82: Suburbanite
	J535 9491	1			1981-83: Tractor
					P78x15
	J536 5074	1			1984-85: EXPORT, Australian Design Rules
	J805 3089	1			7.00x16LT
					1983-85: EXPORT
					7.50R16x5 Sand Tire
	J805 3090	1			1983-85: EXPORT
					9.00x15 Tracker
	J535 6672	1			1981-82
					9Rx15LT
	J535 9768	1			1981-82
					P205/75R15
	J536 4791	1		85,87	1983-86
	J536 4788	1		88	1983-86
					P215/75R15
	J536 4790	1		85,87	1983-86
	J536 4787	1		88	1983-86
					P235/75R15
	J536 3180	1		85,87	1982-83
	J536 3167	1		88	1982-83
	J536 4789	1		85,87	1983-86
	J536 4786	1		88	1983-86
	J536 5075	1			1984-85: EXPORT, Australian Design Rules
4					LABEL, Headlamp Dimmer
	J324 2472	1			Japan
5					LABEL, Turn Signal
	J324 2471	1			Japan

MODEL CODES

16=Cherokee 2 Dr.(1981-83)	78=Cherokee 4WD-4 Dr.(1984-86)	64=Comanche 2WD-6 Ft. Box(1986)	25=J-10 Truck 7 Ft. Box(1981-84)
17=Cherokee 2 Dr.(1981-83)	85=CJ-5 (1981-83)	66=Comanche 2WD-7 Ft. Box(1986)	26=J10 Truck 8 Ft. Box(1981-86)
73=Cherokee 2WD-2 Dr.(1984-86)	86=CJ-6(1981)	63=Comanche 4WD-6 Ft. Box(1986)	27=J-20 Truck 8 Ft. Box(1981-86)
74=Cherokee 2WD-4 Dr.(1984-86)	87=CJ-7(1981-86)	65=Comanche 4WD-7 Ft. Box(1986)	15=Wagoneer 4 Dr.(1981-83)
18=Cherokee 4 Dr.(1981-83)	88=CJ-8, Scrambler(1981-86)	15=Grand Wagoneer 4 Dr.(1984-86)	75=Wagoneer 4WD-4 Dr.(1984-86)
77=Cherokee 4WD-2 Dr.(1984-86)			

BODY
CJ=CJ-5, CJ-6, CJ-7, CJ-8, Scrambler(1981-86)
MJ=Comanche Pickup(1986)

STYLES
SJ=Wagoneer(1981-83), Grand Wagoneer(1984-86), Cherokee(1981-83), J-10, J-20(1981-86)
XJ=Wagoneer(1984-86), Cherokee(1984-86)

AR = Use as Required - = Non Illustrated Part P.A.R. = Paint as Required

LABELS MISCELLANEOUS BODY CJ-5,6,7,8, SCRAMBLER
Figure 23A-9900

81J69 9900

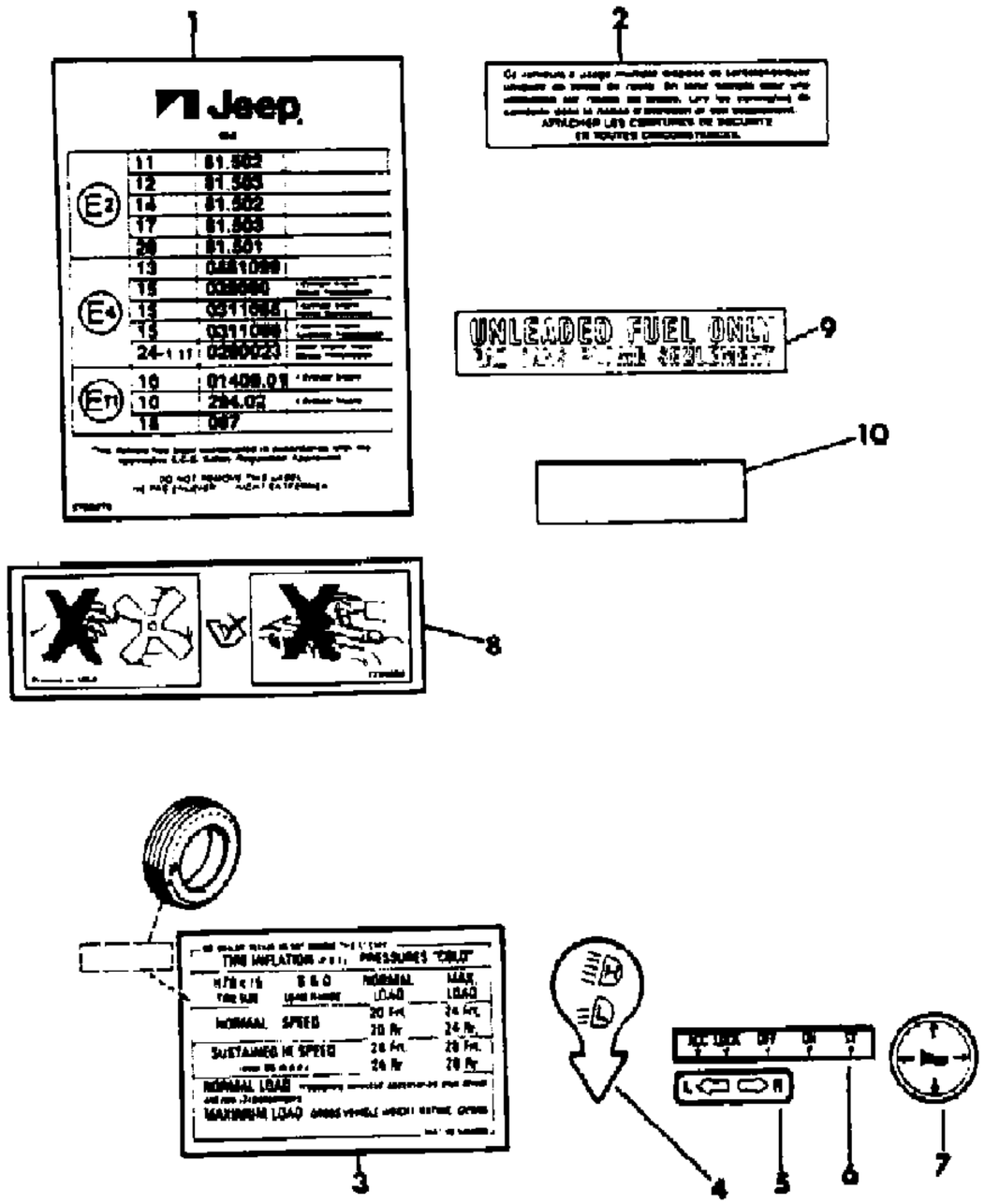

ITEM	PART NUMBER	QTY	BODY	MODEL	DESCRIPTION
6					LABEL, Ignition
	J324 2470	1			Japan
7					LABEL, Horn
	J324 2469	1			Japan
8	J323 4806	1			LABEL, Fan
9					LABEL, Unleaded Fuel
	J369 6393	1			Body
	J546 1055	1			Instrument Panel
10	J322 9455	1			LABEL, Catalytic Converter
					LABEL, Air Cleaner
	J536 1946	1			Four Cylinder
	J322 7513	1			Six Cylinder
	J321 1704	1			Eight Cylinder
					LABEL, Emission
					Four Cylinder
					With Manual Transmission
	J536 2380	1			
	J536 3308	1			CANADA
					With Automatic Transmission
	J536 2392	1			
	J536 3309	1			CANADA
					Six Cylinder
					With Manual Transmission
	J536 2369	1			
	J536 2382	1			California
	J324 2323	1			Japan
					With Automatic Transmission
	J536 2368	1			
	J536 2384	1			California
	J324 2323	1			Japan
	J536 2371	1			Eight Cylinder

MODEL CODES

16=Cherokee 2 Dr.(1981-83)	78=Cherokee 4WD-4 Dr.(1984-86)	64=Comanche 2WD-6 Ft. Box(1986)	25=J-10 Truck 7 Ft. Box(1981-84)
17=Cherokee 2 Dr.(1981-83)	85=CJ-5 (1981-83)	66=Comanche 2WD-7 Ft. Box(1986)	26=J10 Truck 8 Ft. Box(1981-86)
73=Cherokee 2WD-2 Dr.(1984-86)	86=CJ-6(1981)	63=Comanche 4WD-6 Ft. Box(1986)	27=J-20 Truck 8 Ft. Box(1981-86)
74=Cherokee 2WD-4 Dr.(1984-86)	87=CJ-7(1981-86)	65=Comanche 4WD-7 Ft. Box(1986)	15=Wagoneer 4 Dr.(1981-83)
18=Cherokee 4 Dr.(1981-83)	88=CJ-8, Scrambler(1981-86)	15=Grand Wagoneer 4 Dr.(1984-86)	75=Wagoneer 4WD-4 Dr.(1984-86)
77=Cherokee 4WD-2 Dr.(1984-86)			

BODY
CJ=CJ-5, CJ-6, CJ-7, CJ-8, Scrambler(1981-86)
MJ=Comanche Pickup(1986)

STYLES
SJ=Wagoneer(1981-83), Grand Wagoneer(1984-86), Cherokee(1981-83), J-10, J-20(1981-86)
XJ=Wagoneer(1984-86), Cherokee(1984-86)

AR = Use as Required - = Non Illustrated Part P.A.R. = Paint as Required

« RETURN TO GROUP INDEX

LABELS MISCELLANEOUS BODY XJ CHEROKEE, XJ WAGONEER, COMANCHE
Figure 23A-1000

81J69 10000

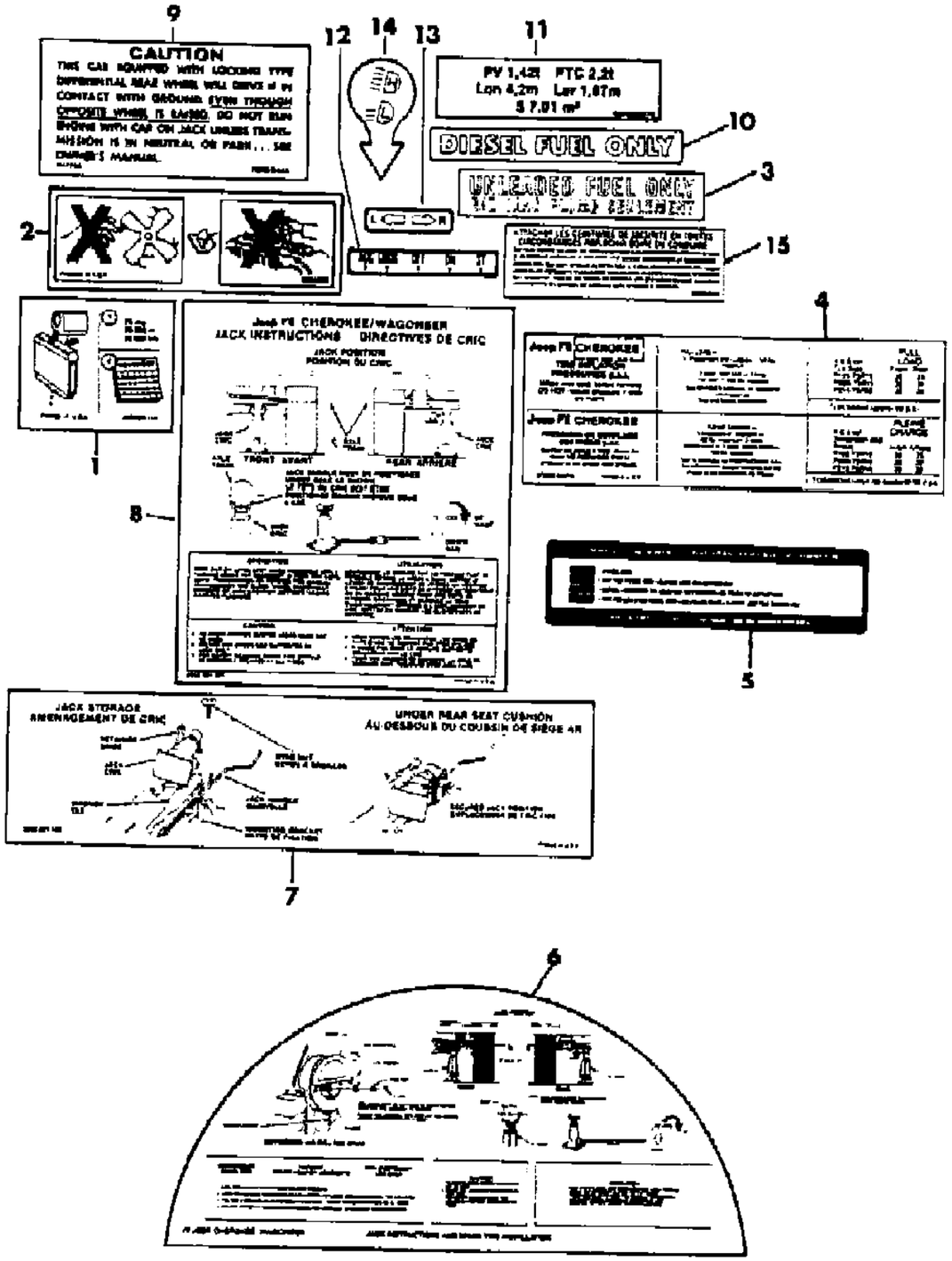

ITEM	PART NUMBER	QTY	BODY	MODEL	DESCRIPTION
1	3300 1114	1			LABEL, Radiator
2	J323 4806	1			LABEL, Fan
3					LABEL, Unleaded Fuel
	J369 6393	1			
	J369 6394	1			CANADA
4					LABEL, Tire Pressure
					1984
	5200 1401	1	XJ	73,74,7	
	5200 0714	1	XJ	75	
					1985
	5200 1401	1	XJ	73,74,7	
	5200 1920	1	XJ	75	
					1986
	5200 1401	1	XJ	73,74,7	
	5200 0714	1	XJ	75	
	5200 1401	1	MJ		
5					LABEL, Transfer Case
					Command Trac
	5501 7686	1			
	5501 7687	1			CANADA, EXPORT
					SelecTrac
	5501 7688	1			
	5501 7689	1			CANADA, EXPORT
6					LABEL, Spare Tire
	5200 1189	1	XJ		
	5200 1190	1	XJ		CANADA
7					LABEL, Jack Storage
	5200 1187	1	XJ		
	5200 1188	1	XJ		CANADA
8					LABEL, Jack
	5200 1200	1	XJ		
	5200 1201	1	XJ		CANADA
9	J315 7268	1			LABEL, Locking Differential
10	J546 4900	1			LABEL, Diesel Fuel
11					LABEL, Commercial Vehicle
					EXPORT
	5500 9370	1			1984-85
	5501 0386	1			1986
12					LABEL, Ignition

MODEL CODES

16=Cherokee 2 Dr.(1981-83)	78=Cherokee 4WD-4 Dr.(1984-86)	64=Comanche 2WD-6 Ft. Box(1986)	25=J-10 Truck 7 Ft. Box(1981-84)
17=Cherokee 2 Dr.(1981-83)	85=CJ-5 (1981-83)	66=Comanche 2WD-7 Ft. Box(1986)	26=J10 Truck 8 Ft. Box(1981-86)
73=Cherokee 2WD-2 Dr.(1984-86)	86=CJ-6(1981)	63=Comanche 4WD-6 Ft. Box(1986)	27=J-20 Truck 8 Ft. Box(1981-86)
74=Cherokee 2WD-4 Dr.(1984-86)	87=CJ-7(1981-86)	65=Comanche 4WD-7 Ft. Box(1986)	15=Wagoneer 4 Dr.(1981-83)
18=Cherokee 4 Dr.(1981-83)	88=CJ-8, Scrambler(1981-86)	15=Grand Wagoneer 4 Dr.(1984-86)	75=Wagoneer 4WD-4 Dr.(1984-86)
77=Cherokee 4WD-2 Dr.(1984-86)			

BODY
CJ=CJ-5, CJ-6, CJ-7, CJ-8, Scrambler(1981-86)
MJ=Comanche Pickup(1986)

STYLES
SJ=Wagoneer(1981-83), Grand Wagoneer(1984-86), Cherokee(1981-83), J-10, J-20(1981-86)
XJ=Wagoneer(1984-86), Cherokee(1984-86)

AR = Use as Required - = Non Illustrated Part P.A.R. = Paint as Required

LABELS MISCELLANEOUS BODY XJ CHEROKEE, XJ WAGONEER, COMANCHE
Figure 23A-1000

81J69 10000

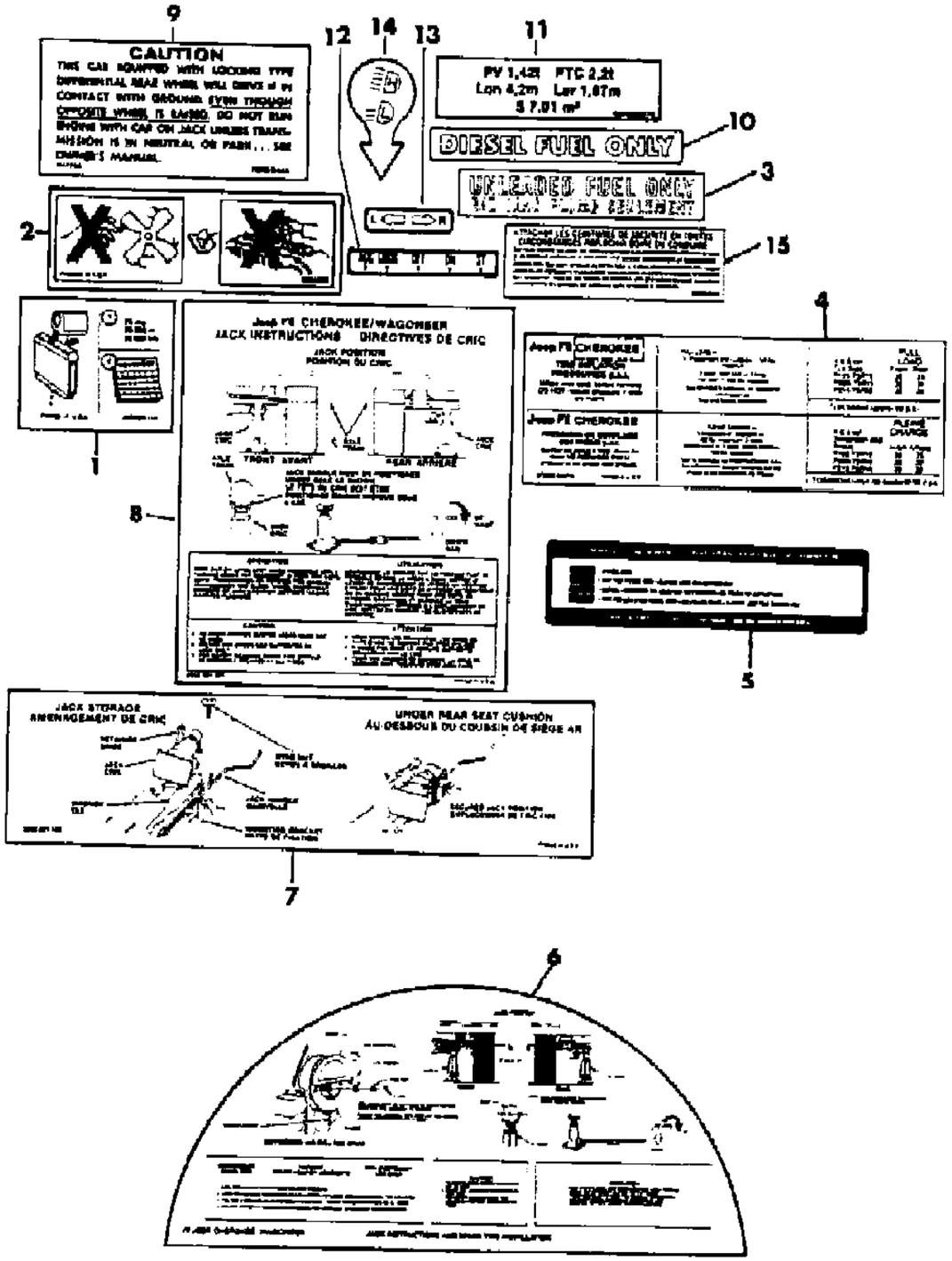

ITEM	PART NUMBER	QTY	BODY	MODEL	DESCRIPTION
	J324 2470	1			Japan
13					LABEL, Turn Signal
	J324 2471	1			Japan
14					LABEL, Headlamp Dimmer
	J324 2472	1			Japan
15					LABEL, Closed Body Warning
	5500 9558	1			CANADA

MODEL CODES

16=Cherokee 2 Dr.(1981-83)	78=Cherokee 4WD-4 Dr.(1984-86)	64=Comanche 2WD-6 Ft. Box(1986)	25=J-10 Truck 7 Ft. Box(1981-84)
17=Cherokee 2 Dr.(1981-83)	85=CJ-5 (1981-83)	66=Comanche 2WD-7 Ft. Box(1986)	26=J10 Truck 8 Ft. Box(1981-86)
73=Cherokee 2WD-2 Dr.(1984-86)	86=CJ-6(1981)	63=Comanche 4WD-6 Ft. Box(1986)	27=J-20 Truck 8 Ft. Box(1981-86)
74=Cherokee 2WD-4 Dr.(1984-86)	87=CJ-7(1981-86)	65=Comanche 4WD-7 Ft. Box(1986)	15=Wagoneer 4 Dr.(1981-83)
18=Cherokee 4 Dr.(1981-83)	88=CJ-8, Scrambler(1981-86)	15=Grand Wagoneer 4 Dr.(1984-86)	75=Wagoneer 4WD-4 Dr.(1984-86)
77=Cherokee 4WD-2 Dr.(1984-86)			

BODY
CJ=CJ-5, CJ-6, CJ-7, CJ-8, Scrambler(1981-86)
MJ=Comanche Pickup(1986)

STYLES
SJ=Wagoneer(1981-83), Grand Wagoneer(1984-86), Cherokee(1981-83), J-10, J-20(1981-86)
XJ=Wagoneer(1984-86), Cherokee(1984-86)

AR = Use as Required - = Non Illustrated Part P.A.R. = Paint as Required

LABELS MISCELLANEOUS BODY SJ CHEROKEE, SJ WAGONEER, J10, J20
Figure 23A-1010

81J69 10100

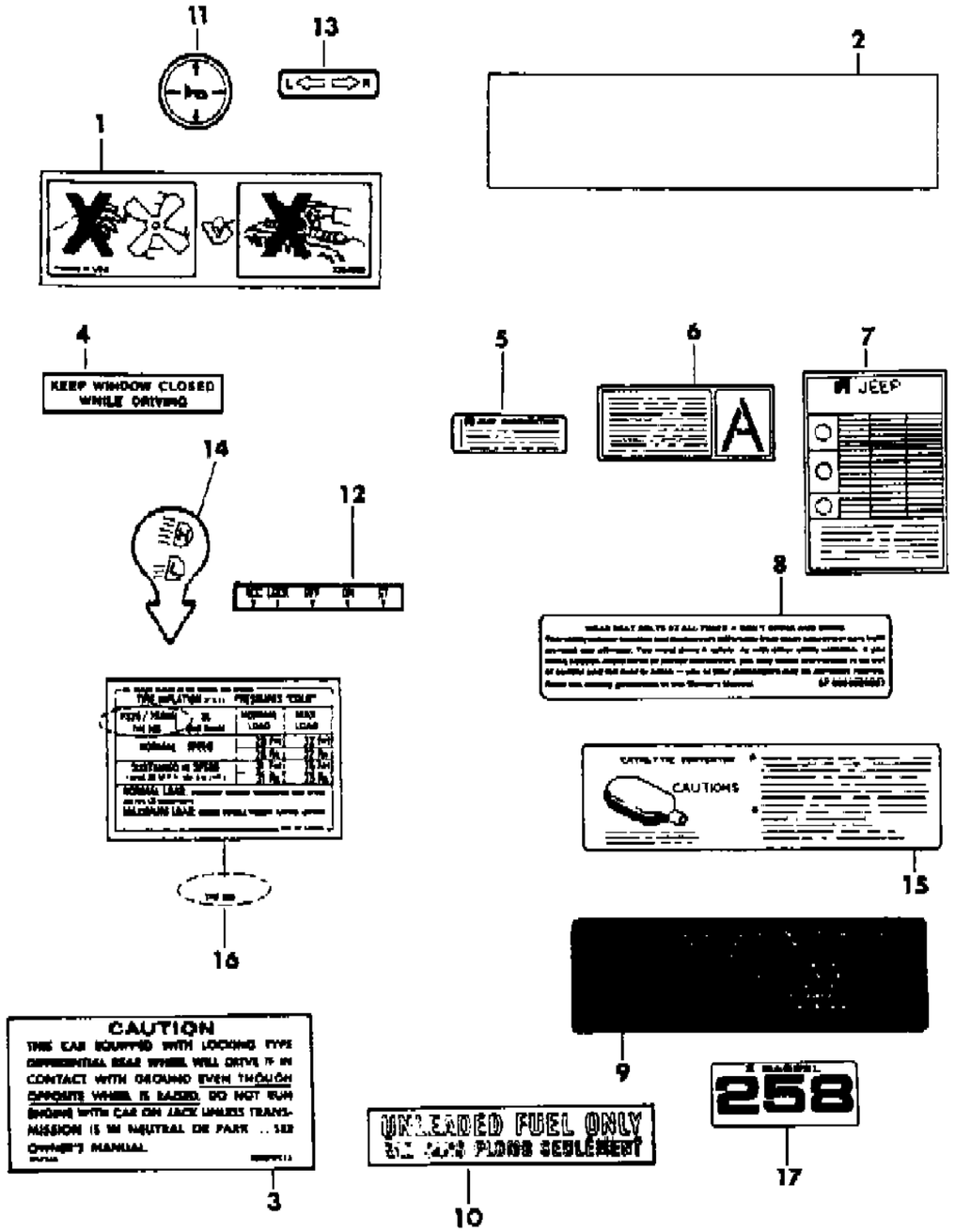

ITEM	PART NUMBER	QTY	BODY	MODEL	DESCRIPTION
1	J323 4806	1			LABEL, Fan
2	J576 1377	1			LABEL, Torque Rod
3	J315 7268	1			LABEL, Locking Differential
4	J369 6965	1			LABEL, Tailgate Window
5					LABEL, Jack
					EXPORT, Australian Design Rules
	J536 4693	1		17,18	
	J536 4694	1		27	
6					LABEL, A Mark
	J575 0372	1			EXPORT, American-Arab Vehicle
7					LABEL, E Mark
	J576 2574	1			EXPORT
8	5500 9557	1			LABEL, Sunvisor, English
9	5500 9558	1			LABEL, Sunvisor, French
10	J369 6393	1			LABEL, Unleaded Fuel
11					LABEL, Horn
	J324 2469	1			Japan
12					LABEL, Ignition
	J324 2470	1			Japan
13					LABEL, Turn Signal
	J324 2471	1			Japan
14					LABEL, Headlamp Dimmer
	J324 2472	1			Japan
15	J322 9455	1			LABEL, Catalytic Converter
16					LABEL, Tire Pressure
					H78x15
	J535 4369	1		15,16,1	1981-82: 32 PSI
	J535 4368	1		15,16,1	1981-82: 36 PSI
	J535 7659	1		15,16,1	1981-82: With Snow Plow Package
	J535 4367	1		25,26	1981-83: 32 PSI
	J535 3326	1		25,26	1981-82: 36 PSI
	J535 7660	1		25,26	1981-83: With Snow Plow Package
					HR78-15
	J535 8174	1		15,16,1	1981-82
	J535 8174	1		25,26	1981-82
					L78x15
	J535 9251	1		18,25,2	1981-82
					10Rx15LT
	J535 9766	1		17,25,2	1981-82

MODEL CODES

16=Cherokee 2 Dr.(1981-83)
17=Cherokee 2 Dr.(1981-83)
73=Cherokee 2WD-2 Dr.(1984-86)
74=Cherokee 2WD-4 Dr.(1984-86)
18=Cherokee 4 Dr.(1981-83)
77=Cherokee 4WD-2 Dr.(1984-86)
78=Cherokee 4WD-4 Dr.(1984-86)
85=CJ-5 (1981-83)
86=CJ-6(1981)
87=CJ-7(1981-86)
88=CJ-8, Scrambler(1981-86)
64=Comanche 2WD-6 Ft. Box(1986)
66=Comanche 2WD-7 Ft. Box(1986)
63=Comanche 4WD-6 Ft. Box(1986)
65=Comanche 4WD-7 Ft. Box(1986)
15=Grand Wagoneer 4 Dr.(1984-86)
25=J-10 Truck 7 Ft. Box(1981-84)
26=J10 Truck 8 Ft. Box(1981-86)
27=J-20 Truck 8 Ft. Box(1981-86)
15=Wagoneer 4 Dr.(1981-83)
75=Wagoneer 4WD-4 Dr.(1984-86)

BODY
CJ=CJ-5, CJ-6, CJ-7, CJ-8, Scrambler(1981-86)
MJ=Comanche Pickup(1986)

STYLES
SJ=Wagoneer(1981-83), Grand Wagoneer(1984-86), Cherokee(1981-83), J-10, J-20(1981-86)
XJ=Wagoneer(1984-86), Cherokee(1984-86)

AR = Use as Required - = Non Illustrated Part P.A.R. = Paint as Required

LABELS MISCELLANEOUS BODY SJ CHEROKEE, SJ WAGONEER, J10, J20
Figure 23A-1010

81J69 10100

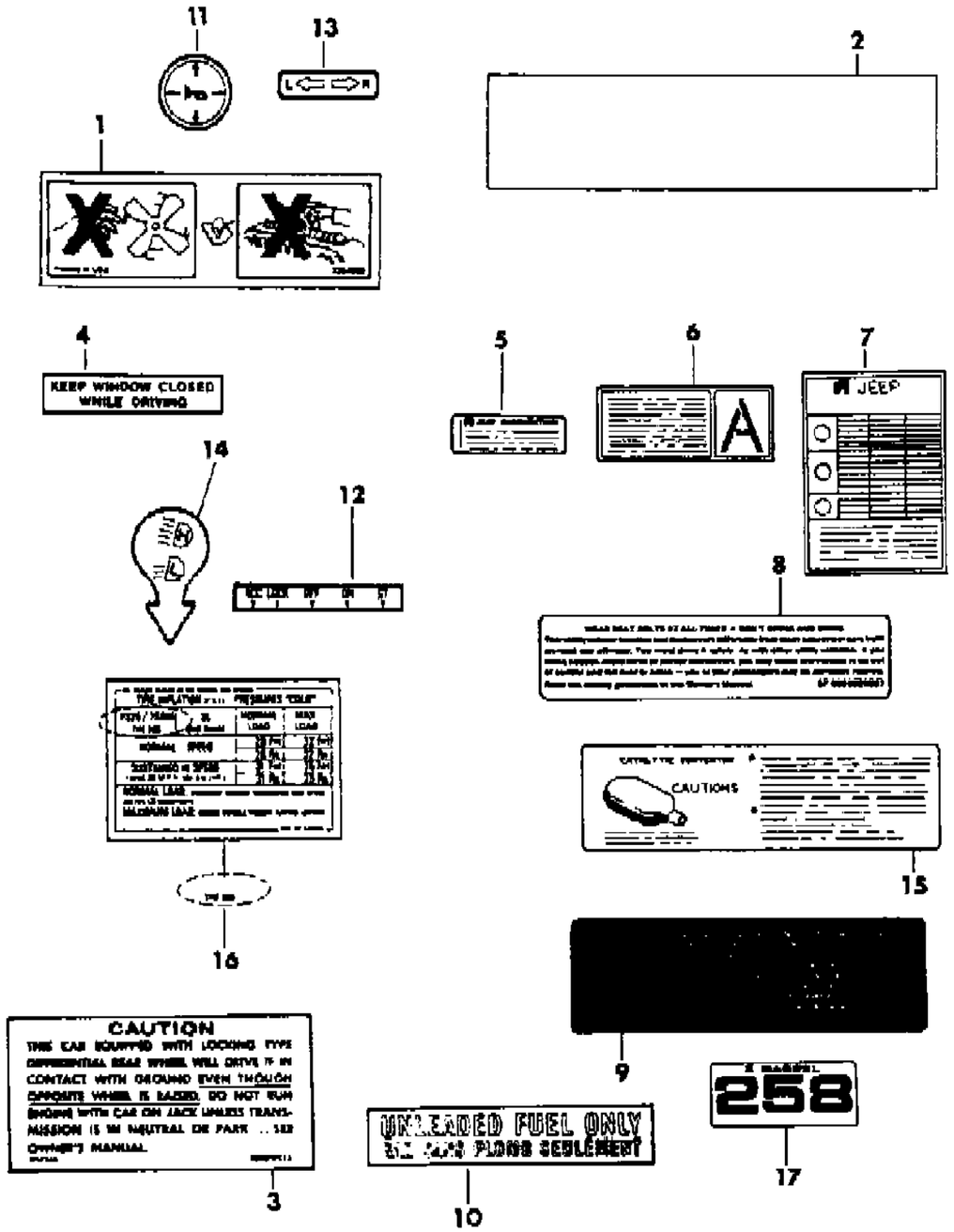

ITEM	PART NUMBER	QTY	BODY	MODEL	DESCRIPTION
					10.00x15LT
	J535 5868	1		17,25,2	1981-82
					7.50x16
	J536 5181	1		27	1985-86: EXPORT, Australian Design Rules
					8.75x16.5
	J535 9253	1		27	1981-86
					8.75x16.5LT
	J536 5070	1		27	1984-86
					9.50x16.5
	J535 3320	1		27	1981-86
					P225/75R15
	J535 9252	1			1981-82
	J536 2845	1			1982-86
					P235/75R15
	J536 3052	1		16,18	1982-86
					1985-86
	5200 2339	1		15	
	J536 5182	1		15	EXPORT, Australian Design Rules
17					LABEL, Air Cleaner
	J322 7513	1			Six Cylinder
					Eight Cylinder
	J321 1704	1			5.0L
	J321 1705	1			5.9L

MODEL CODES

16=Cherokee 2 Dr.(1981-83)	78=Cherokee 4WD-4 Dr.(1984-86)	64=Comanche 2WD-6 Ft. Box(1986)	25=J-10 Truck 7 Ft. Box(1981-84)
17=Cherokee 2 Dr.(1981-83)	85=CJ-5 (1981-83)	66=Comanche 2WD-7 Ft. Box(1986)	26=J10 Truck 8 Ft. Box(1981-86)
73=Cherokee 2WD-2 Dr.(1984-86)	86=CJ-6(1981)	63=Comanche 4WD-6 Ft. Box(1986)	27=J-20 Truck 8 Ft. Box(1981-86)
74=Cherokee 2WD-4 Dr.(1984-86)	87=CJ-7(1981-86)	65=Comanche 4WD-7 Ft. Box(1986)	15=Wagoneer 4 Dr.(1981-83)
18=Cherokee 4 Dr.(1981-83)	88=CJ-8, Scrambler(1981-86)	15=Grand Wagoneer 4 Dr.(1984-86)	75=Wagoneer 4WD-4 Dr.(1984-86)
77=Cherokee 4WD-2 Dr.(1984-86)			

BODY
CJ=CJ-5, CJ-6, CJ-7, CJ-8, Scrambler(1981-86)
MJ=Comanche Pickup(1986)

STYLES
SJ=Wagoneer(1981-83), Grand Wagoneer(1984-86), Cherokee(1981-83), J-10, J-20(1981-86)
XJ=Wagoneer(1984-86), Cherokee(1984-86)

AR = Use as Required - = Non Illustrated Part P.A.R. = Paint as Required

« RETURN TO GROUP INDEX

ILLUSTRATION NOT AVAILABLE AT TIME OF PUBLICATION

GROUP 23C - BODY - DOORS AND RELATED PARTS

ILLUSTRATION TITLE	GROUP-FIG. NO.
CJ	
DOORS, FULL, FRONT HANDLES, LATCHES, WITH MEYER CAB CJ-5	Fig. 23C-100
DOORS, FULL, FRONT HANDLES, LATCHES, RODS, WITH FIXED VENT CJ-7,8 1981-82	Fig. 23C-200
DOORS, FULL, FRONT HANDLES, LATCHES, RODS, WITH MOVABLE VENT CJ-7,8 1982-86	Fig. 23C-300
DOORS, FULL, FRONT GLASS AND REGULATOR CJ-7,8	Fig. 23C-400
WEATHERSTRIPS, DOOR, FRONT CJ-7,8	Fig. 23C-500
CHAIN, BARRIER EXPORT CJ-7	Fig. 23C-600
HINGES, FRONT DOOR CJ-7,8	Fig. 23C-700
MIRRORS, EXTERIOR CJ	Fig. 23C-800
MIRRORS, EXTERIOR ECE, JAPAN CJ	Fig. 23C-900
DOOR, REAR, HANDLES AND LATCHES VERTICAL, WITH MEYER CAB CJ-5	Fig. 23C-1000
DOOR, REAR, HANDLES AND LATCHES WORLD CAB, EXPORT, LEFT/RIGHT HAND DRIVE CJ-7,8	Fig. 23C-1100
HINGES, REAR DOOR WORLD CAB, EXPORT CJ-7,8	Fig. 23C-1200
CHEROKEE, WAGONEER, COMANCHE	
DOORS, FRONT AND REAR FOUR DOOR XJ CHEROKEE, XJ WAGONEER	Fig. 23C-1300
DOOR, FRONT TWO DOOR XJ CHEROKEE	Fig. 23C-1400
DOOR, FRONT COMANCHE	Fig. 23C-1500
HINGES, DOOR FRONT AND REAR XJ CHEROKEE, XJ WAGONEER, COMANCHE	Fig. 23C-1600
DOORS, HANDLES AND ACTUATORS CHEROKEE, WAGONEER, COMANCHE	Fig. 23C-1700
DOOR, HANDLES AND CONTROLS XJ CHEROKEE, XJ WAGONEER, COMANCHE	Fig. 23C-1800
GLASS, DOOR FRONT AND REAR XJ CHEROKEE, XJ WAGONEER, COMANCHE	Fig. 23C-1900
REGULATORS, DOOR GLASS MANUAL XJ CHEROKEE, XJ WAGONEER, COMANCHE	Fig. 23C-2000
REGULATORS, DOOR GLASS ELECTRIC XJ CHEROKEE, XJ WAGONEER, COMANCHE	Fig. 23C-2100
WEATHERSTRIPS, DOOR FRONT AND REAR XJ CHEROKEE, XJ WAGONEER, COMANCHE	Fig. 23C-2200
MIRRORS, EXTERIOR MANUAL XJ CHEROKEE, XJ WAGONEER, COMANCHE	Fig. 23C-2300
MIRRORS, EXTERIOR LOW PROFILE XJ CHEROKEE, XJ WAGONEER, COMANCHE	Fig. 23C-2400
MIRRORS, EXTERIOR REMOTE CONTROL XJ CHEROKEE, XJ WAGONEER, COMANCHE	Fig. 23C-2500
MIRRORS, EXTERIOR ELECTRIC XJ CHEROKEE, XJ WAGONEER	Fig. 23C-2600
SJ WAGONEER, SJ CHEROKEE, J10, J20	
DOORS, FRONT AND REAR SJ WAGONEER, SJ CHEROKEE, J10, J20	Fig. 23C-2700
DOOR, LATCHES AND RODS FRONT AND REAR SJ WAGONEER, SJ CHEROKEE, J10, J20	Fig. 23C-2800
DOOR, CONTROLS SJ WAGONEER, SJ CHEROKEE, J10, J20	Fig. 23C-2900
DOOR, GLASS REGULATOR MANUAL SJ WAGONEER, SJ CHEROKEE, J10, J20	Fig. 23C-3000
REGULATOR, DOOR GLASS ELECTRIC, TYPE 1, 1981-82 SJ WAGONEER, SJ CHEROKEE, J10, J20	Fig. 23C-3100
REGULATOR, DOOR GLASS ELECTRIC FLEXRACK, TYPE 2, 1982-85 SJ WAGONEER, SJ CHEROKEE, J10, J20	Fig. 23C-3200

ILLUSTRATION TITLE **GROUP-FIG. NO.**

SJ WAGONEER, SJ CHEROKEE, J10, J20 (Continued)

REGULATOR, DOOR GLASS ELECTRIC FLEXRACK, TYPE 2, 1982-85 SJ WAGONEER, SJ CHEROKEE, J10, J20 . . . . . Fig. 23C-3200
REGULATOR, DOOR GLASS ELECTRIC FLEXRACK, TYPE THREE 1985-86 GRAND WAGONEER, J10, J20 Fig. 23C-3300
GLASS, DOOR FRONT AND REAR SJ WAGONEER, SJ CHEROKEE, J10, J20 . . . . . Fig. 23C-3400
WEATHERSTRIPS, DOOR FRONT AND REAR SJ WAGONEER, SJ CHEROKEE, J10, J20 . . . . . Fig. 23C-3500
MIRRORS, EXTERIOR SJ WAGONEER, SJ CHEROKEE, J10, J20 . . . . . Fig. 23C-3600

DOORS, FULL, FRONT HANDLES, LATCHES, WITH MEYER CAB CJ-5
Figure 23C-100

81J71 100

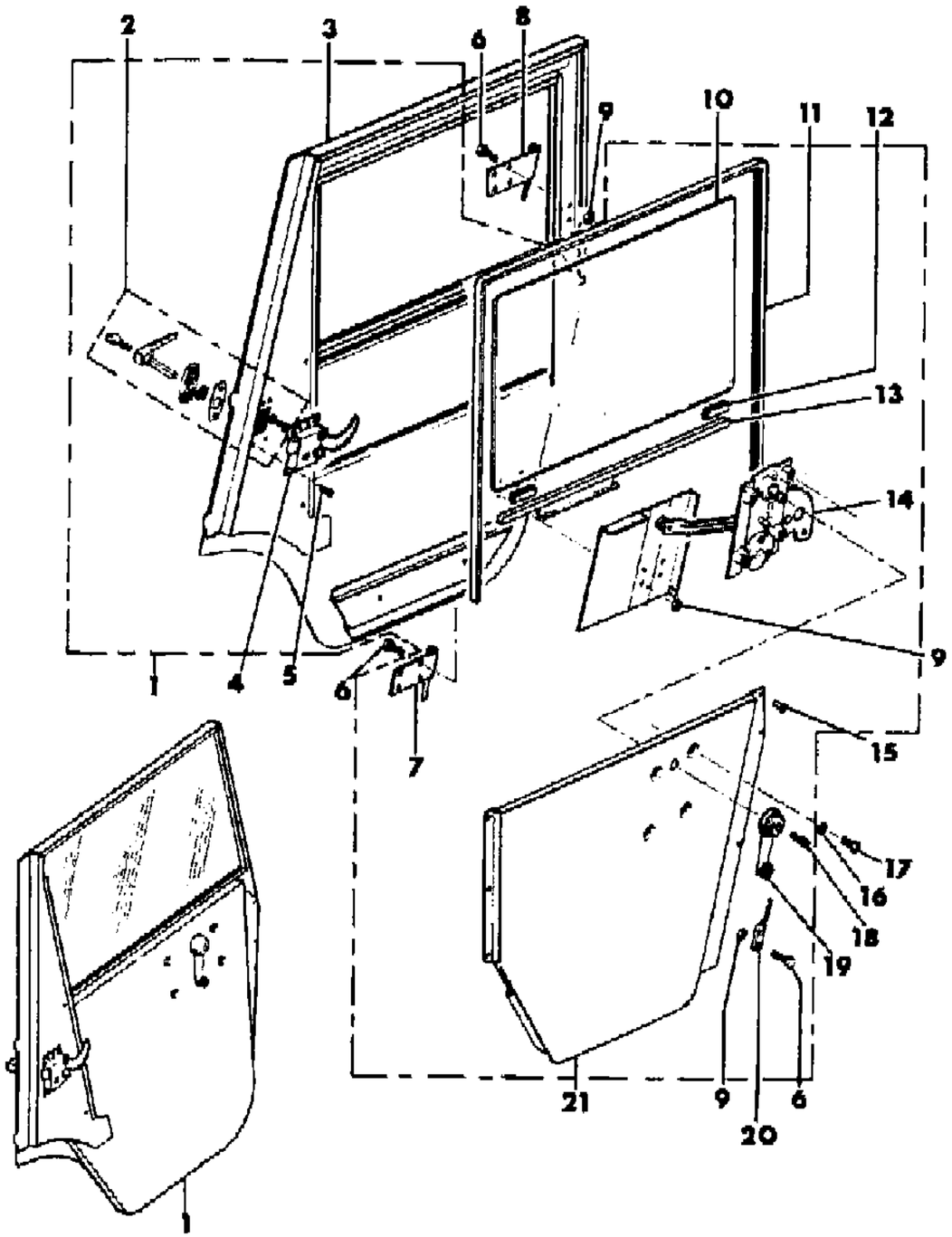

ITEM	PART NUMBER	QTY	BODY	MODEL	DESCRIPTION
1	J204 3314-5	1			DOOR ASSEMBLY ***
2	J204 3663	2			HANDLE
3					SHELL, Door
	J204 2042	1			Right
	J204 2054	1			Left
4					LATCH
	J204 2051	1			Right
	J204 3309	1			Left
5	J202 1143	AR			SCREW
6	J202 0002	AR			BOLT
7					HINGE
	J204 2045	1			Right
	J204 2057	1			Left
8					HINGE
	J204 2013	1			Right
	J204 2015	1			Left
9	J202 0312	AR			NUT
10	J204 2046	2			GLASS
11	J204 3564	2			FRAME, Glass
12	J204 2083	AR			SEAL
13	J204 3320-1	1			CHANNEL, Glass
14	J204 3318-9	1			REGULATOR, Glass
15	J202 1143	AR			FASTENER
16	J202 1270	AR			WASHER
17	J202 1249	AR			SCREW
18	J202 3322	2			SCREW
19	J204 3662	2			HANDLE, Regulator
20	J204 2020	2			HOOK
21	J204 3316-7	1			PANEL, Repair

MODEL CODES
16=Cherokee 2 Dr.(1981-83)
17=Cherokee 2 Dr.(1981-83)
73=Cherokee 2WD-2 Dr.(1984-86)
74=Cherokee 2WD-4 Dr.(1984-86)
18=Cherokee 4 Dr.(1981-83)
77=Cherokee 4WD-2 Dr.(1984-86)
78=Cherokee 4WD-4 Dr.(1984-86)
85=CJ-5 (1981-83)
86=CJ-6(1981)
87=CJ-7(1981-86)
88=CJ-8, Scrambler(1981-86)
64=Comanche 2WD-6 Ft. Box(1986)
66=Comanche 2WD-7 Ft. Box(1986)
63=Comanche 4WD-6 Ft. Box(1986)
65=Comanche 4WD-7 Ft. Box(1986)
15=Grand Wagoneer 4 Dr.(1984-86)
25=J-10 Truck 7 Ft. Box(1981-84)
26=J10 Truck 8 Ft. Box(1981-86)
27=J-20 Truck 8 Ft. Box(1981-86)
15=Wagoneer 4 Dr.(1981-83)
75=Wagoneer 4WD-4 Dr.(1984-86)

BODY
CJ=CJ-5, CJ-6, CJ-7, CJ-8, Scrambler(1981-86)
MJ=Comanche Pickup(1986)

STYLES
SJ=Wagoneer(1981-83), Grand Wagoneer(1984-86), Cherokee(1981-83), J-10, J-20(1981-86)
XJ=Wagoneer(1984-86), Cherokee(1984-86)

AR = Use as Required - = Non Illustrated Part P.A.R. = Paint as Required

« RETURN TO GROUP INDEX

DOORS, FULL, FRONT HANDLES, LATCHES, RODS, WITH FIXED VENT CJ-7,8 1981-82
Figure 23C-200

81J71 200

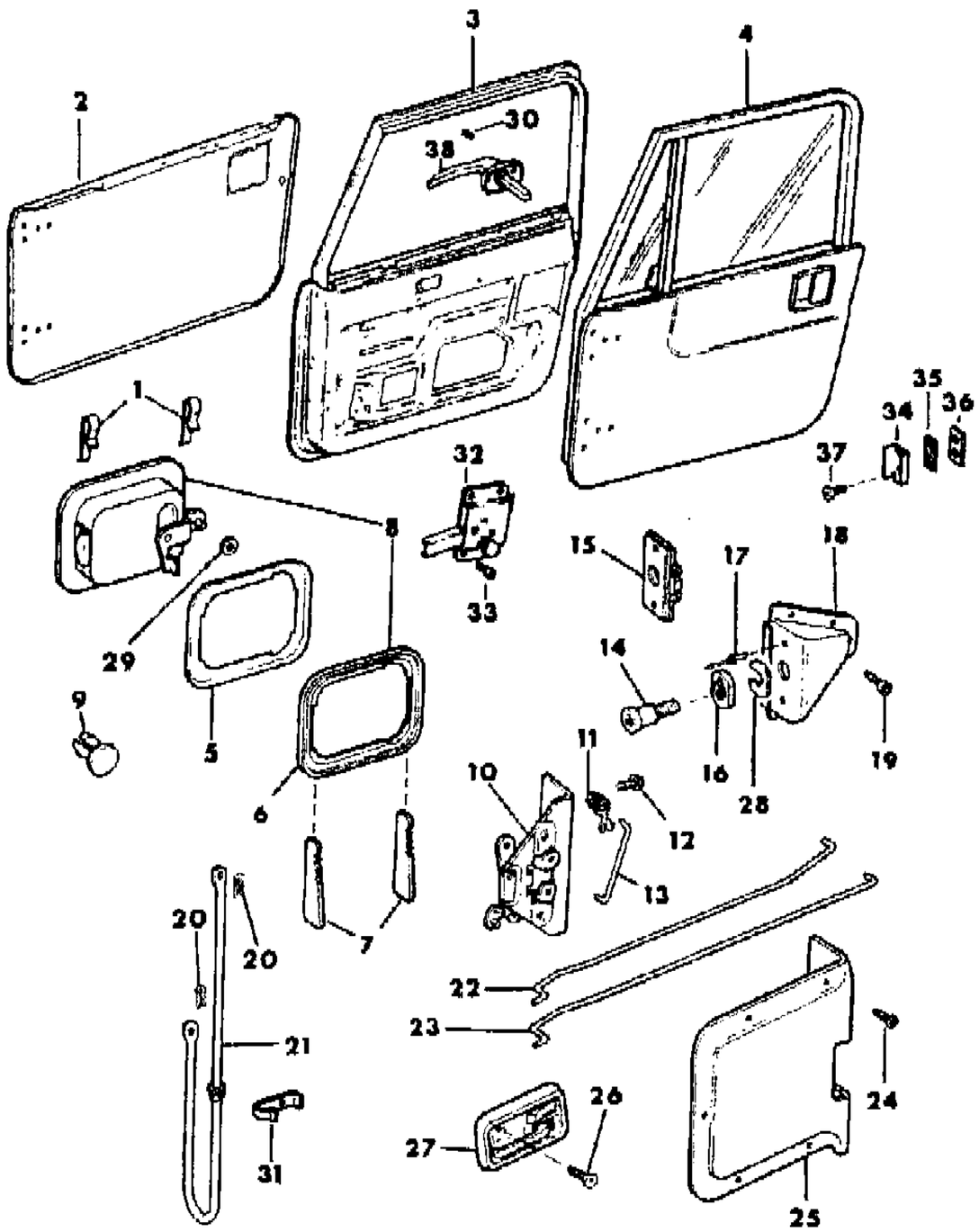

ITEM	PART NUMBER	QTY	BODY	MODEL	DESCRIPTION
1	8350 2268	4			CLIP
2					PANEL, Repair
					RIGHT
	J545 4136	1			with lever type exterior handle protruding from the door, 1981
	J575 8154	1			with paddle type exterior handle, flush with panel1981-82
					LEFT
	J545 4135	1			with lever type exterior handle protruding from the door, 1981
	J575 8155	1			with paddle type exterior handle, flush with panel, 1981-82
3					DOOR, w/Inner and Outer Panels
	J813 2804-5	1			with lever type exterior handle, protruding from the door, 1981
	J813 3668-9	1			with paddle type exterior handle, flush with panel, 1981-82
4					DOOR ASSEMBLY, with paddle type exterior handle, flush with panel, 1981 ***
	J813 3970-1	1			After 11-4-80, also order J8133997 mtg. kit
5	J575 8898	2			BEZEL, Trim
6	J575 8174	2			GASKET
7	J575 8175	4			KEEPER ***
8	J575 8172-3	1			HANDLE, Exterior
9	J400 4949	4			PLUG
10	J575 8176-7	1			LATCH, Door
11	J400 4532	2			CLIP, w/Bushing
12	J400 6874	4			SCREW
13	J575 8190	2			ROD, Lock Cylinder
14	J575 8191	2			STRIKER, Door
15	J575 8194	2			PLATE, Tapping
16	J575 8192	2			PLATE, Striker
17	J400 6878	4			RIVET
18	J575 8468	1			COVER, Striker
19	J400 5817	8			SCREW
20	J400 5122	4			PIN
21					ROD, Latch Release
	J575 8954-5	1			1981-84
	J576 5376-7	1			1984-86
22	J575 8948-9	1			ROD, Locking
23	J575 8950-1	1			ROD, R/Control
24	J400 4812	10			SCREW
25	J575 8170-1	1			COVER, Latch
26	J400 6870	2			SCREW
27					HANDLE, R/Control

MODEL CODES

16=Cherokee 2 Dr.(1981-83)
17=Cherokee 2 Dr.(1981-83)
73=Cherokee 2WD-2 Dr.(1984-86)
74=Cherokee 2WD-4 Dr.(1984-86)
18=Cherokee 4 Dr.(1981-83)
77=Cherokee 4WD-2 Dr.(1984-86)
78=Cherokee 4WD-4 Dr.(1984-86)
85=CJ-5 (1981-83)
86=CJ-6(1981)
87=CJ-7(1981-86)
88=CJ-8, Scrambler(1981-86)
64=Comanche 2WD-6 Ft. Box(1986)
66=Comanche 2WD-7 Ft. Box(1986)
63=Comanche 4WD-6 Ft. Box(1986)
65=Comanche 4WD-7 Ft. Box(1986)
15=Grand Wagoneer 4 Dr.(1984-86)
25=J-10 Truck 7 Ft. Box(1981-84)
26=J10 Truck 8 Ft. Box(1981-86)
27=J-20 Truck 8 Ft. Box(1981-86)
15=Wagoneer 4 Dr.(1981-83)
75=Wagoneer 4WD-4 Dr.(1984-86)

BODY
CJ=CJ-5, CJ-6, CJ-7, CJ-8, Scrambler(1981-86)
MJ=Comanche Pickup(1986)

STYLES
SJ=Wagoneer(1981-83), Grand Wagoneer(1984-86), Cherokee(1981-83), J-10, J-20(1981-86)
XJ=Wagoneer(1984-86), Cherokee(1984-86)

AR = Use as Required - = Non Illustrated Part P.A.R. = Paint as Required

« RETURN TO GROUP INDEX »

DOORS, FULL, FRONT HANDLES, LATCHES, RODS, WITH FIXED VENT CJ-7,8 1981-82
Figure 23C-200

81J71 200

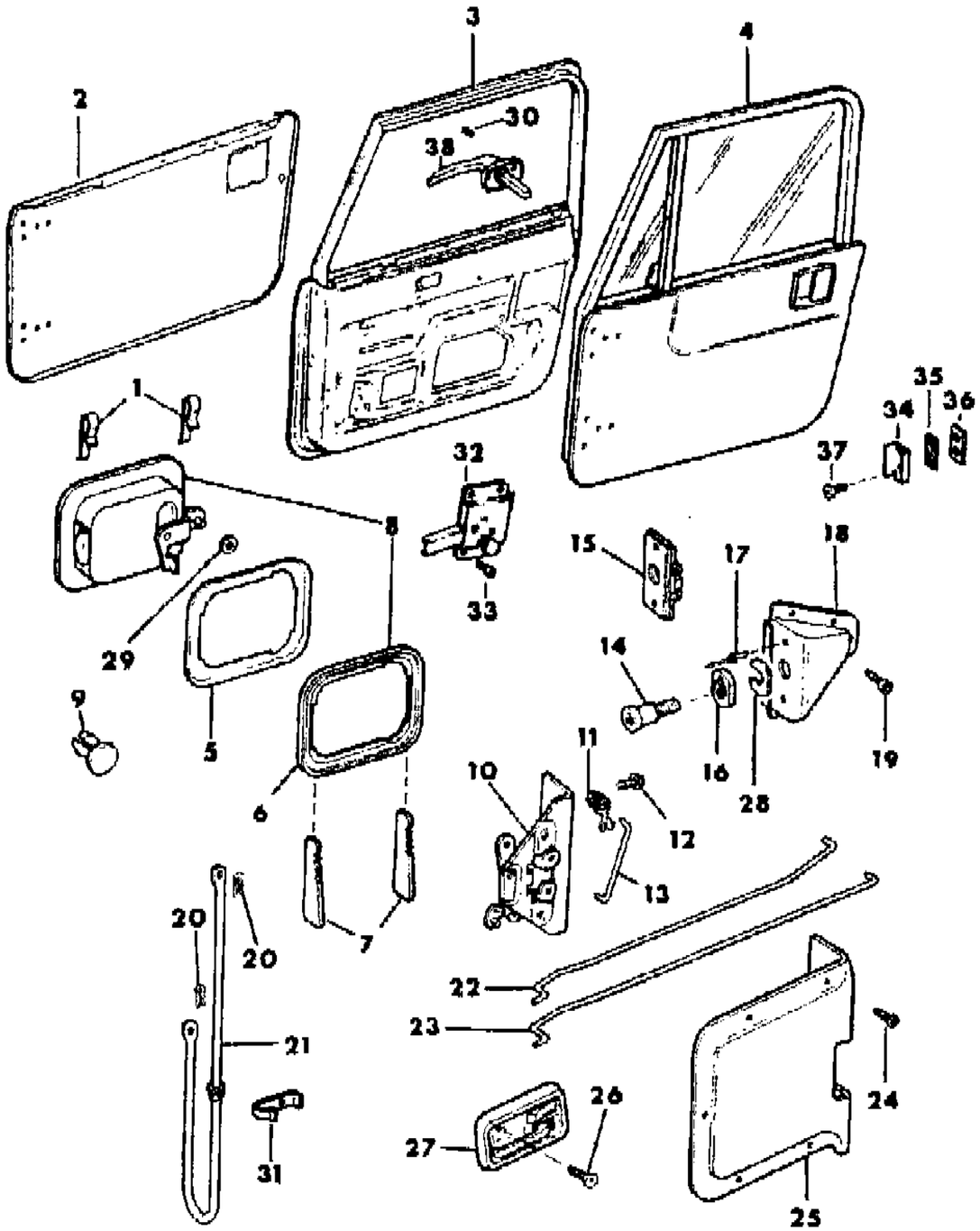

ITEM	PART NUMBER	QTY	BODY	MODEL	DESCRIPTION
	T065 0261	1			Right
	T065 0326	1			Left
28	J575 8193	4			SHIM
29	3420 1846	2			WASHER
30	J400 4980	4			SCREW
31	J400 6879	2			CLIP
32	J546 1866-7	1			LATCH, Door
33	J400 5657	8			SCREW
34	J545 9838	2			STRIKER, Door
35	J545 9187	AR			SHIM
36	J545 9677	2			PLATE, Tapping
37	J400 4995	4			SCREW
38	J812 8461	2			HANDLE, Exterior, w/Cylinder

MODEL CODES
16=Cherokee 2 Dr.(1981-83)
17=Cherokee 2 Dr.(1981-83)
73=Cherokee 2WD-2 Dr.(1984-86)
74=Cherokee 2WD-4 Dr.(1984-86)
18=Cherokee 4 Dr.(1981-83)
77=Cherokee 4WD-2 Dr.(1984-86)
78=Cherokee 4WD-4 Dr.(1984-86)
85=CJ-5 (1981-83)
86=CJ-6(1981)
87=CJ-7(1981-86)
88=CJ-8, Scrambler(1981-86)
64=Comanche 2WD-6 Ft. Box(1986)
66=Comanche 2WD-7 Ft. Box(1986)
63=Comanche 4WD-6 Ft. Box(1986)
65=Comanche 4WD-7 Ft. Box(1986)
15=Grand Wagoneer 4 Dr.(1984-86)
25=J-10 Truck 7 Ft. Box(1981-84)
26=J10 Truck 8 Ft. Box(1981-86)
27=J-20 Truck 8 Ft. Box(1981-86)
15=Wagoneer 4 Dr.(1981-83)
75=Wagoneer 4WD-4 Dr.(1984-86)

BODY
CJ=CJ-5, CJ-6, CJ-7, CJ-8, Scrambler(1981-86)
MJ=Comanche Pickup(1986)

STYLES
SJ=Wagoneer(1981-83), Grand Wagoneer(1984-86), Cherokee(1981-83), J-10, J-20(1981-86)
XJ=Wagoneer(1984-86), Cherokee(1984-86)

AR = Use as Required - = Non Illustrated Part P.A.R. = Paint as Required

« RETURN TO GROUP INDEX

DOORS, FULL, FRONT HANDLES, LATCHES, RODS, WITH MOVABLE VENT CJ-7,8 1982-86
Figure 23C-300

81J71 300

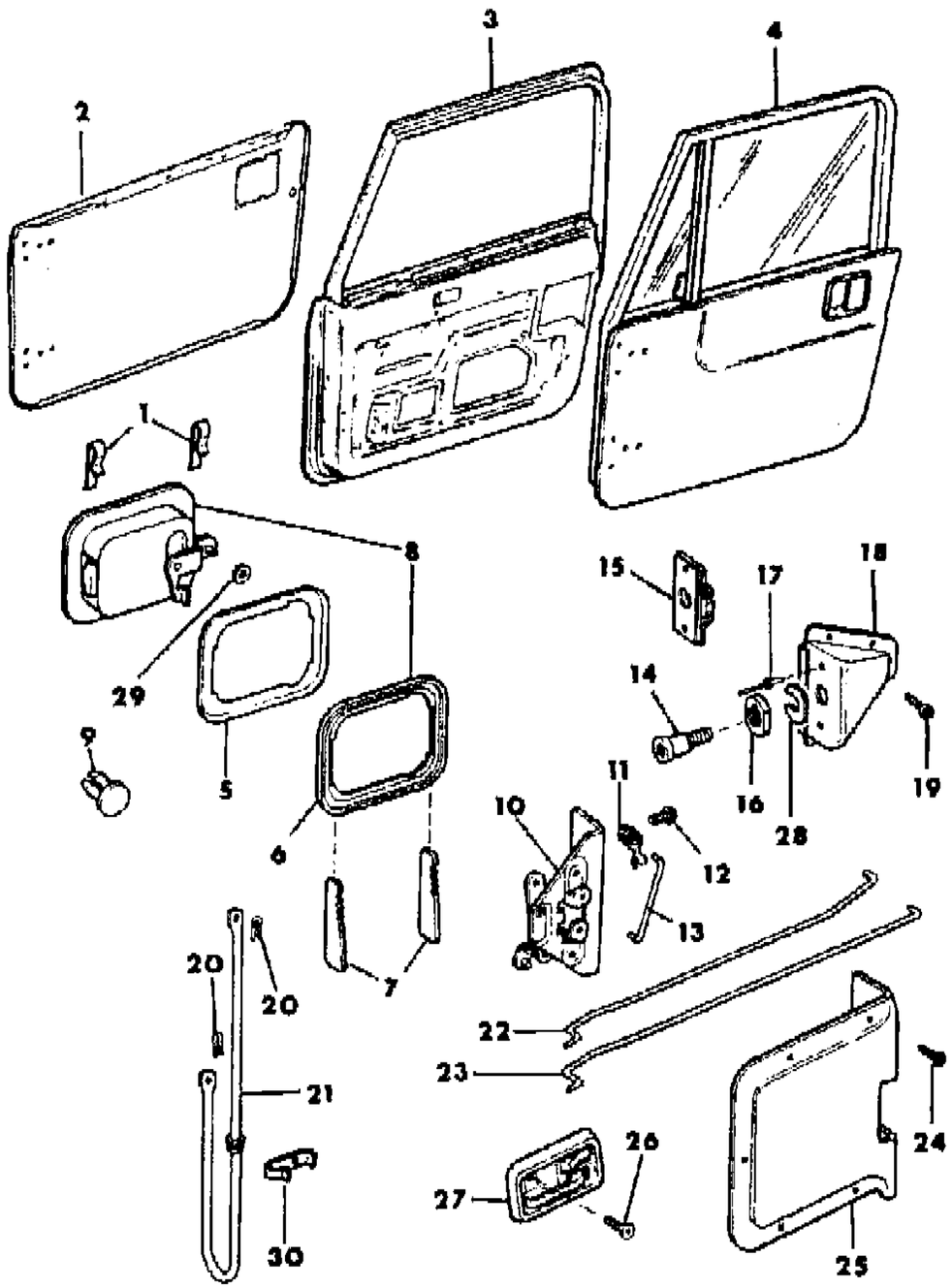

ITEM	PART NUMBER	QTY	BODY	MODEL	DESCRIPTION
1	8350 2268	4			CLIP
2	J576 1130-1	1			PANEL, Repair
3					DOOR, w/Inner and Outer Panels
	J576 2362-3	1			w/o World Cab
	J556 8055	1			w/World Cab, Right
	J556 8054	1			w/World Cab, Left
4					DOOR ASSEMBLY, Also Order 83500653 Mtg. Kit ***
	8350 0652	1			Right
	8350 0651	1			Left
5	J575 8898	2			BEZEL, Trim
6	J575 8174	2			GASKET
7	J575 8175	4			KEEPER ***
8	J575 8172	1			HANDLE, Exterior
9	J400 4949	4			PLUG
10	J575 8176-7	1			LATCH, Door
11	J400 4532	2			CLIP, w/Bushing
12	J400 6874	4			SCREW
13	J575 8190	2			ROD, Lock Cylinder
14	J575 8191	2			STRIKER, Door
15	J575 8194	2			PLATE, Tapping
16	J575 8192	2			PLATE, Striker
17	J400 6878	4			RIVET
18	J575 8468-9	1			COVER, Striker
19	J400 5817	8			SCREW
20	J400 5122	4			PIN
21					ROD, Latch Release
	J575 8954-5	1			1981-84
	J576 5376-7	1			1984-86
22	J575 8948-9	1			ROD, Locking
23	J575 8950-1	1			ROD, R/Control
24	J400 4812	10			SCREW
25	J575 8170-1	1			COVER, Latch
26	J400 6870	2			SCREW
27					HANDLE, R/Control
	T065 0261	1			Right
	T065 0326	1			Left
28	J575 8193	4			SHIM
29	3420 1846	2			WASHER
30	J400 6897	2			CLIP

MODEL CODES
16=Cherokee 2 Dr.(1981-83)
17=Cherokee 2 Dr.(1981-83)
73=Cherokee 2WD-2 Dr.(1984-86)
74=Cherokee 2WD-4 Dr.(1984-86)
18=Cherokee 4 Dr.(1981-83)
77=Cherokee 4WD-2 Dr.(1984-86)
78=Cherokee 4WD-4 Dr.(1984-86)
85=CJ-5 (1981-83)
86=CJ-6(1981)
87=CJ-7(1981-86)
88=CJ-8, Scrambler(1981-86)
64=Comanche 2WD-6 Ft. Box(1986)
66=Comanche 2WD-7 Ft. Box(1986)
63=Comanche 4WD-6 Ft. Box(1986)
65=Comanche 4WD-7 Ft. Box(1986)
15=Grand Wagoneer 4 Dr.(1984-86)
25=J-10 Truck 7 Ft. Box(1981-84)
26=J10 Truck 8 Ft. Box(1981-86)
27=J-20 Truck 8 Ft. Box(1981-86)
15=Wagoneer 4 Dr.(1981-83)
75=Wagoneer 4WD-4 Dr.(1984-86)

BODY
CJ=CJ-5, CJ-6, CJ-7, CJ-8, Scrambler(1981-86)
MJ=Comanche Pickup(1986)

STYLES
SJ=Wagoneer(1981-83), Grand Wagoneer(1984-86), Cherokee(1981-83), J-10, J-20(1981-86)
XJ=Wagoneer(1984-86), Cherokee(1984-86)

AR = Use as Required - = Non Illustrated Part P.A.R. = Paint as Required

« RETURN TO GROUP INDEX

DOORS, FULL, FRONT GLASS AND REGULATOR CJ-7,8
Figure 23C-400

81J71 400

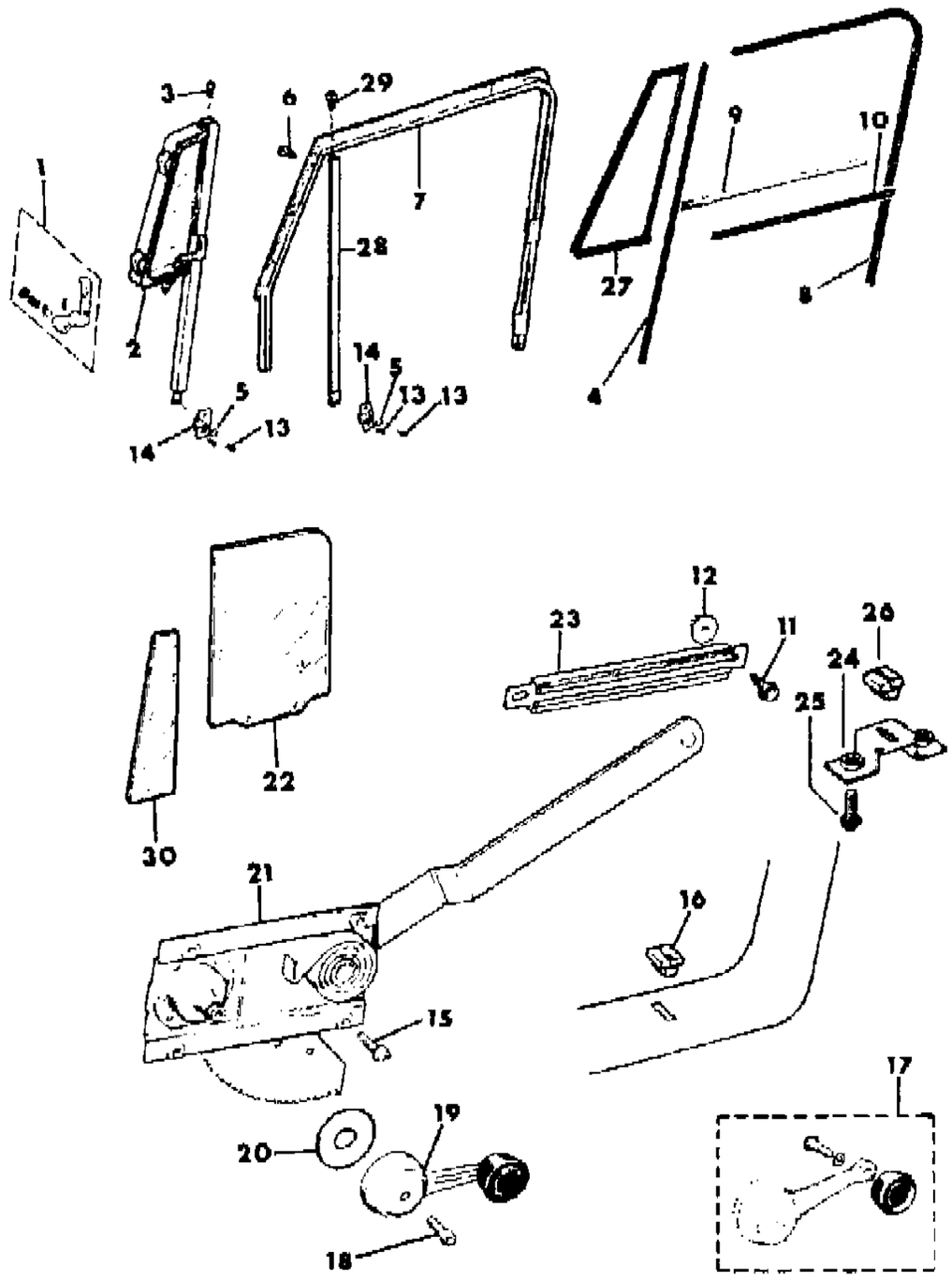

ITEM	PART NUMBER	QTY	BODY	MODEL	DESCRIPTION
1	J813 4852-3	1			PACKAGE, Handle
2	J576 2326-7	1			VENT, Pivoting
3	J045 7002	AR			SCREW
4					WEATHERSTRIP, Glass Run
	J545 4164	2			w/Fixed Vent Glass, 1981-82
	J813 4851	2			w/Movable Vent Glass, 1982-86
5	J012 0386	2			WASHER
6	J016 4487	2			SCREW
7					FRAME, Glass
					RIGHT
	J545 4144	1			w/fixed vent glass, paddle type exterior handle, flush with panel, 1981-82
	J576 1134	1			w/movable vent glass, 1982-86
	J556 8057	1			w/world cab, export
					LEFT
	J545 4147	1			w/fixed vent glass, paddle type exterior handle, flush with panel, 1981-82
	J576 1135	1			w/movable vent glass, 1982-86
	J556 8056	1			w/world cab, export
8					CHANNEL, Glass Run
	J545 7057	1			w/o world cab, export
	J556 8181	2			w/World Cab, Export
9					WEATHERSTRIP, Inner
	J545 3833	2			w/Fixed Vent Glass, 1981-82
	J576 2384-5	1			w/Movable Vent Glass, 1982-86
10	J545 9644	2			WEATHERSTRIP, Outer
11	J400 0424	4			SCREW
12	J400 3706	4			GROMMET
13	J045 5683	AR			SCREW
14	J454 7300	2			BRACKET, Division Bar Mtg.
15	J019 1985	8			SCREW
16	J576 4621	2			BUMPER, Stop, 1983-86
17	J813 4422	AR			PACKAGE, Knob
18	J400 5969	2			SCREW
19	J367 8907	2			HANDLE, Regulator
20	J361 3467	2			WASHER
21					REGULATOR, Glass
	J545 4146	1			Right
	J545 4145	1			Left

MODEL CODES

16=Cherokee 2 Dr.(1981-83)
17=Cherokee 2 Dr.(1981-83)
73=Cherokee 2WD-2 Dr.(1984-86)
74=Cherokee 2WD-4 Dr.(1984-86)
18=Cherokee 4 Dr.(1981-83)
77=Cherokee 4WD-2 Dr.(1984-86)
78=Cherokee 4WD-4 Dr.(1984-86)
85=CJ-5 (1981-83)
86=CJ-6(1981)
87=CJ-7(1981-86)
88=CJ-8, Scrambler(1981-86)
64=Comanche 2WD-6 Ft. Box(1986)
66=Comanche 2WD-7 Ft. Box(1986)
63=Comanche 4WD-6 Ft. Box(1986)
65=Comanche 4WD-7 Ft. Box(1986)
15=Grand Wagoneer 4 Dr.(1984-86)
25=J-10 Truck 7 Ft. Box(1981-84)
26=J10 Truck 8 Ft. Box(1981-86)
27=J-20 Truck 8 Ft. Box(1981-86)
15=Wagoneer 4 Dr.(1981-83)
75=Wagoneer 4WD-4 Dr.(1984-86)

BODY
CJ=CJ-5, CJ-6, CJ-7, CJ-8, Scrambler(1981-86)
MJ=Comanche Pickup(1986)

STYLES
SJ=Wagoneer(1981-83), Grand Wagoneer(1984-86), Cherokee(1981-83), J-10, J-20(1981-86)
XJ=Wagoneer(1984-86), Cherokee(1984-86)

AR = Use as Required - = Non Illustrated Part P.A.R. = Paint as Required

« RETURN TO GROUP INDEX »

DOORS, FULL, FRONT GLASS AND REGULATOR CJ-7,8
Figure 23C-400

81J71 400

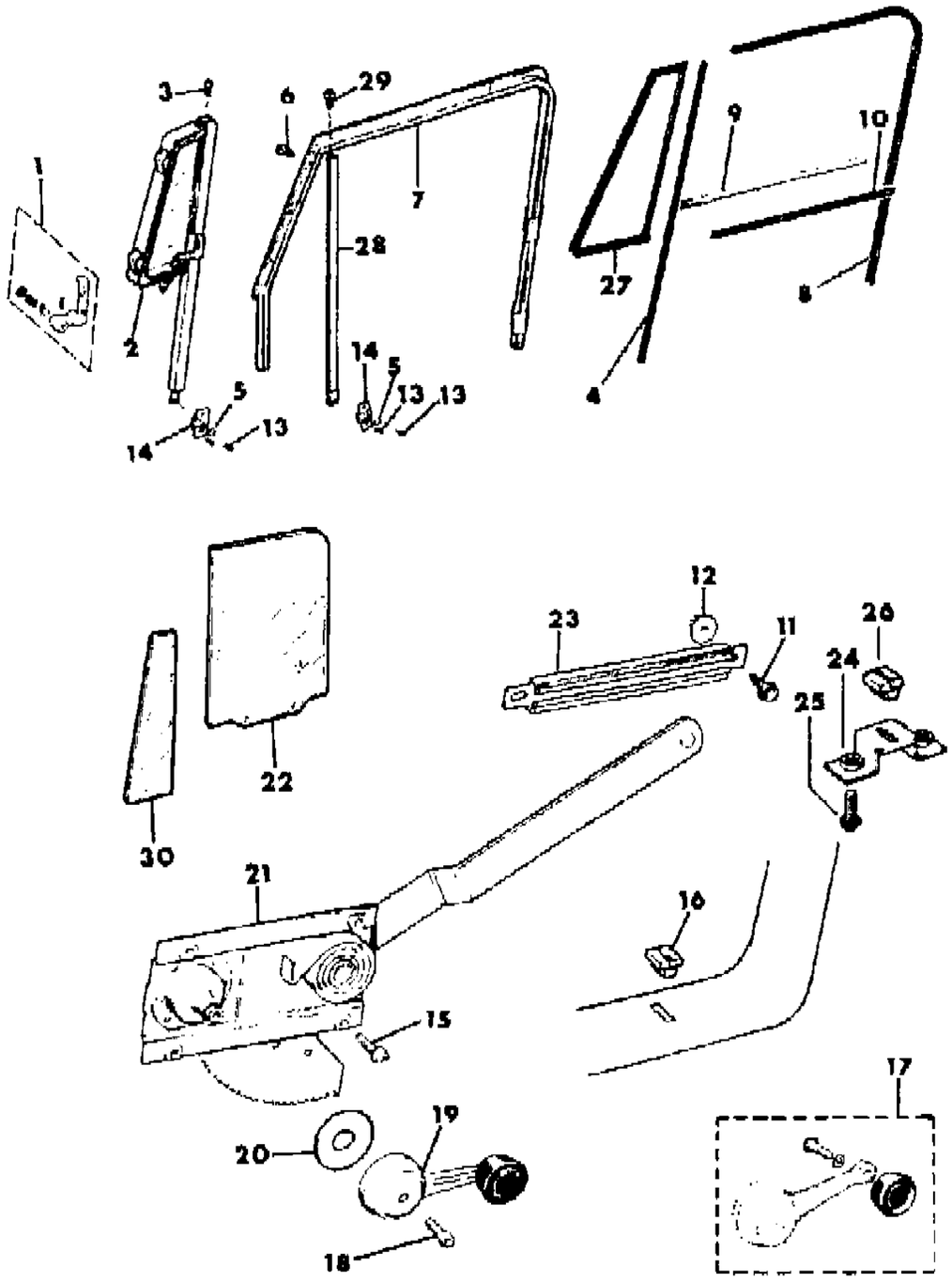

ITEM	PART NUMBER	QTY	BODY	MODEL	DESCRIPTION
22					GLASS, Door
					RIGHT
	J545 3882	1			US, Canada
	J556 7897	1			World Cab, Export
	J575 6184	1			Export
					LEFT
	J454 3881	1			US, Canada
	J556 7898	1			World Cab, Export
	J575 6185	1			Export
23	J545 4156	2			GUIDE, Glass
24	J545 7232	2			BRACKET, Stop, 1981-83
25	J454 0283	4			SCREW, 1981-83
26	J095 7728	1			BUMPER, Stop, 1981-83
27					WEATHERSTRIP, Fixed Glass
	J545 9434	1			Right
	J545 9433	1			Left
28					BAR, Division
	J545 4162	1			Right
	J545 4161	1			Left
29	J045 7002	AR			SCREW
30					GLASS, Fixed, 1981-82
					RIGHT
	J545 3880	1			US, Canada ***
	J575 6132	1			Export
					LEFT
	J545 3879	1			US, Canada
	J575 6133	1			Export

MODEL CODES

16=Cherokee 2 Dr.(1981-83)	78=Cherokee 4WD-4 Dr.(1984-86)	64=Comanche 2WD-6 Ft. Box(1986)	25=J-10 Truck 7 Ft. Box(1981-84)
17=Cherokee 2 Dr.(1981-83)	85=CJ-5 (1981-83)	66=Comanche 2WD-7 Ft. Box(1986)	26=J10 Truck 8 Ft. Box(1981-86)
73=Cherokee 2WD-2 Dr.(1984-86)	86=CJ-6(1981)	63=Comanche 4WD-6 Ft. Box(1986)	27=J-20 Truck 8 Ft. Box(1981-86)
74=Cherokee 2WD-4 Dr.(1984-86)	87=CJ-7(1981-86)	65=Comanche 4WD-7 Ft. Box(1986)	15=Wagoneer 4 Dr.(1981-83)
18=Cherokee 4 Dr.(1981-83)	88=CJ-8, Scrambler(1981-86)	15=Grand Wagoneer 4 Dr.(1984-86)	75=Wagoneer 4WD-4 Dr.(1984-86)
77=Cherokee 4WD-2 Dr.(1984-86)			

BODY
CJ=CJ-5, CJ-6, CJ-7, CJ-8, Scrambler(1981-86)
MJ=Comanche Pickup(1986)

STYLES
SJ=Wagoneer(1981-83), Grand Wagoneer(1984-86), Cherokee(1981-83), J-10, J-20(1981-86)
XJ=Wagoneer(1984-86), Cherokee(1984-86)

AR = Use as Required - = Non Illustrated Part P.A.R. = Paint as Required

« RETURN TO GROUP INDEX

WEATHERSTRIPS, DOOR, FRONT CJ-7,8
Figure 23C-500

81J71 500

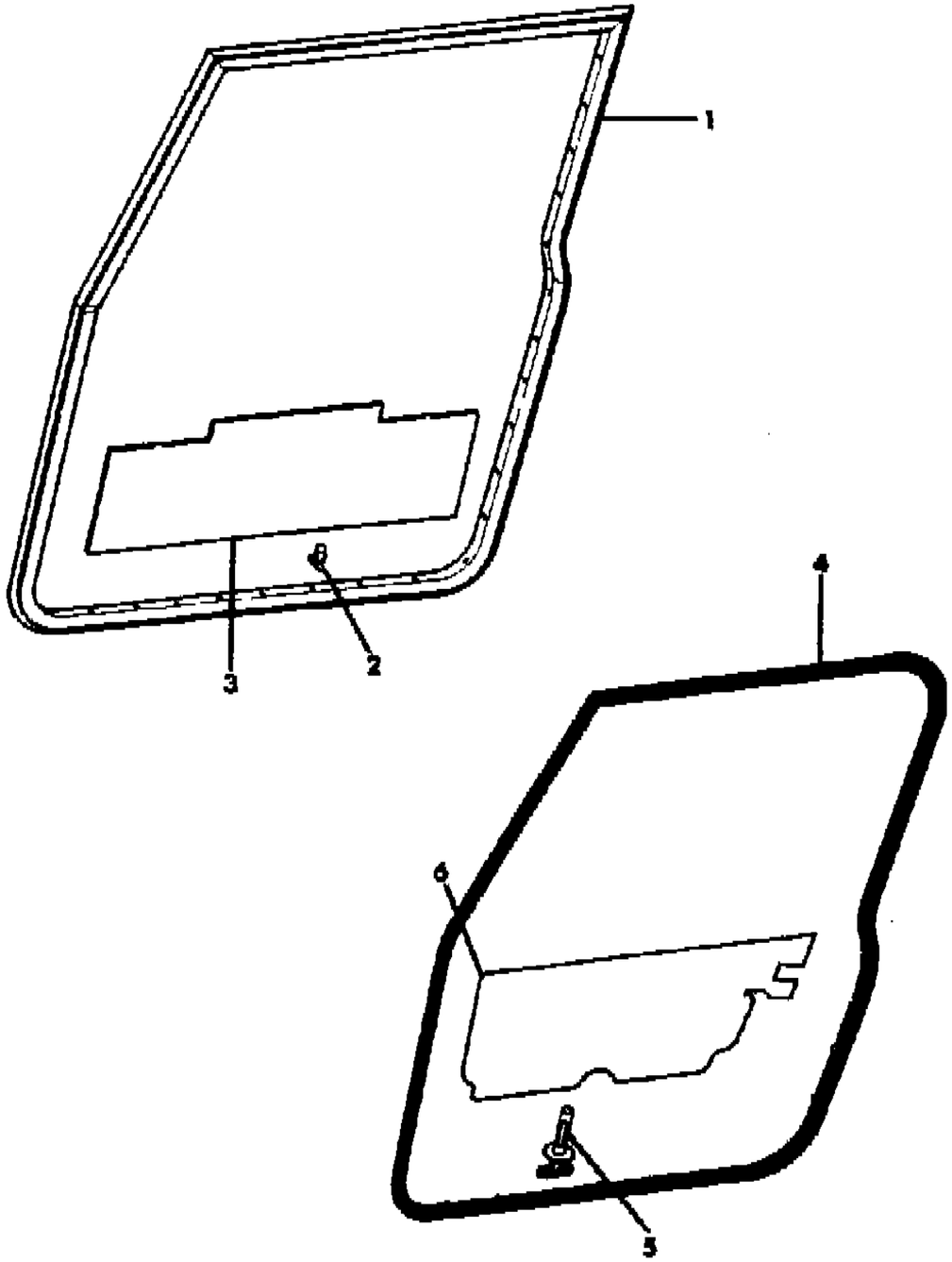

ITEM	PART NUMBER	QTY	BODY	MODEL	DESCRIPTION
1					WEATHERSTRIP
	J805 3258	1			Right
	J556 8129	1			Left
2	J400 1916	AR			FASTENER
3	J576 6604	2			WATERDAM, Door ***
4					WEATHERSTRIP
	J545 4170	1			Right
	J545 4169	1			Left
5	J400 1916	AR			FASTENER
6	5505 2556-7	1			WEATHERSTRIP

MODEL CODES

16=Cherokee 2 Dr.(1981-83)
17=Cherokee 2 Dr.(1981-83)
73=Cherokee 2WD-2 Dr.(1984-86)
74=Cherokee 2WD-4 Dr.(1984-86)
18=Cherokee 4 Dr.(1981-83)
77=Cherokee 4WD-2 Dr.(1984-86)
78=Cherokee 4WD-4 Dr.(1984-86)
85=CJ-5 (1981-83)
86=CJ-6(1981)
87=CJ-7(1981-86)
88=CJ-8, Scrambler(1981-86)
64=Comanche 2WD-6 Ft. Box(1986)
66=Comanche 2WD-7 Ft. Box(1986)
63=Comanche 4WD-6 Ft. Box(1986)
65=Comanche 4WD-7 Ft. Box(1986)
15=Grand Wagoneer 4 Dr.(1984-86)
25=J-10 Truck 7 Ft. Box(1981-84)
26=J10 Truck 8 Ft. Box(1981-86)
27=J-20 Truck 8 Ft. Box(1981-86)
15=Wagoneer 4 Dr.(1981-83)
75=Wagoneer 4WD-4 Dr.(1984-86)

BODY
CJ=CJ-5, CJ-6, CJ-7, CJ-8, Scrambler(1981-86)
MJ=Comanche Pickup(1986)

STYLES
SJ=Wagoneer(1981-83), Grand Wagoneer(1984-86), Cherokee(1981-83), J-10, J-20(1981-86)
XJ=Wagoneer(1984-86), Cherokee(1984-86)

AR = Use as Required - = Non Illustrated Part P.A.R. = Paint as Required

« RETURN TO GROUP INDEX

CHAIN, BARRIER EXPORT CJ-7
Figure 23C-600

81J71 600

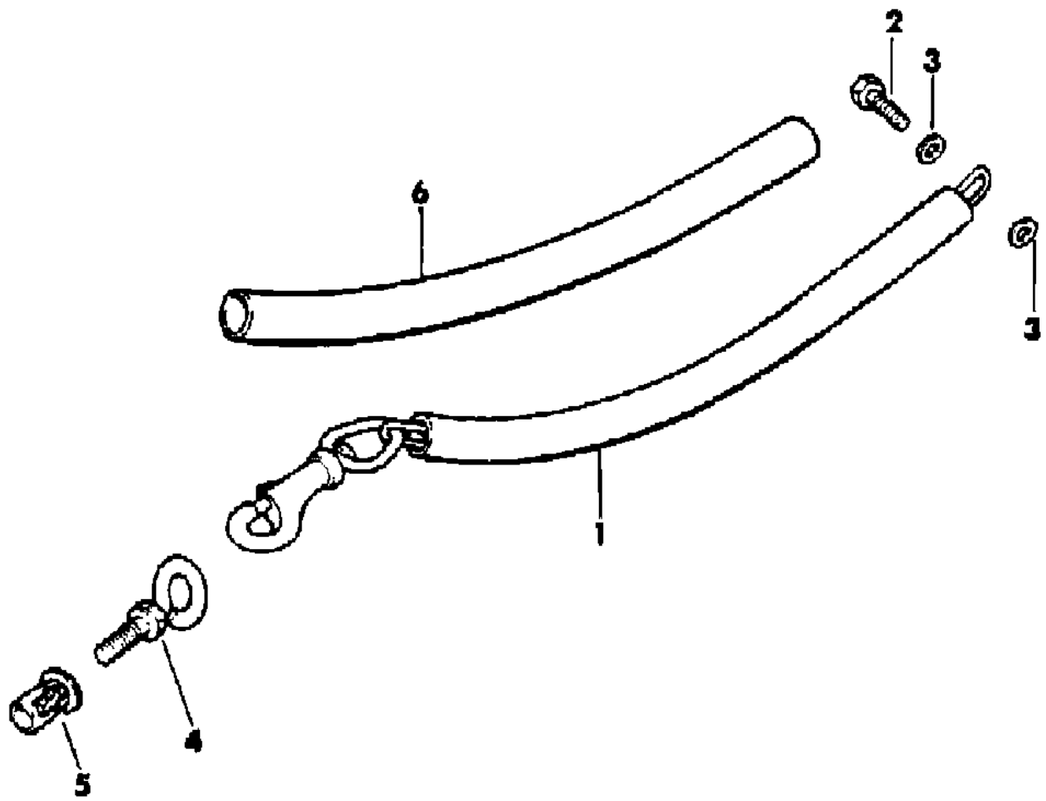

ITEM	PART NUMBER	QTY	BODY	MODEL	DESCRIPTION
1	J575 8862	2			CHAIN ***
2					BOLT
	J018 0020	2			1981-82
	J400 7214	2			1983
3	J400 7015	2			WASHER
4	J400 7013	2			BOLT
5	J400 7012	2			NUT
6					COVER
	J576 3357	2			Black
	J576 3359	2			Honey
	J576 3358	2			Nutmeg

MODEL CODES
16=Cherokee 2 Dr.(1981-83)
17=Cherokee 2 Dr.(1981-83)
73=Cherokee 2WD-2 Dr.(1984-86)
74=Cherokee 2WD-4 Dr.(1984-86)
18=Cherokee 4 Dr.(1981-83)
77=Cherokee 4WD-2 Dr.(1984-86)
78=Cherokee 4WD-4 Dr.(1984-86)
85=CJ-5 (1981-83)
86=CJ-6(1981)
87=CJ-7(1981-86)
88=CJ-8, Scrambler(1981-86)
64=Comanche 2WD-6 Ft. Box(1986)
66=Comanche 2WD-7 Ft. Box(1986)
63=Comanche 4WD-6 Ft. Box(1986)
65=Comanche 4WD-7 Ft. Box(1986)
15=Grand Wagoneer 4 Dr.(1984-86)
25=J-10 Truck 7 Ft. Box(1981-84)
26=J10 Truck 8 Ft. Box(1981-86)
27=J-20 Truck 8 Ft. Box(1981-86)
15=Wagoneer 4 Dr.(1981-83)
75=Wagoneer 4WD-4 Dr.(1984-86)

BODY
CJ=CJ-5, CJ-6, CJ-7, CJ-8, Scrambler(1981-86)
MJ=Comanche Pickup(1986)

STYLES
SJ=Wagoneer(1981-83), Grand Wagoneer(1984-86), Cherokee(1981-83), J-10, J-20(1981-86)
XJ=Wagoneer(1984-86), Cherokee(1984-86)

AR = Use as Required - = Non Illustrated Part P.A.R. = Paint as Required

« RETURN TO GROUP INDEX

HINGES, FRONT DOOR CJ-7,8
Figure 23C-700

81J71 700

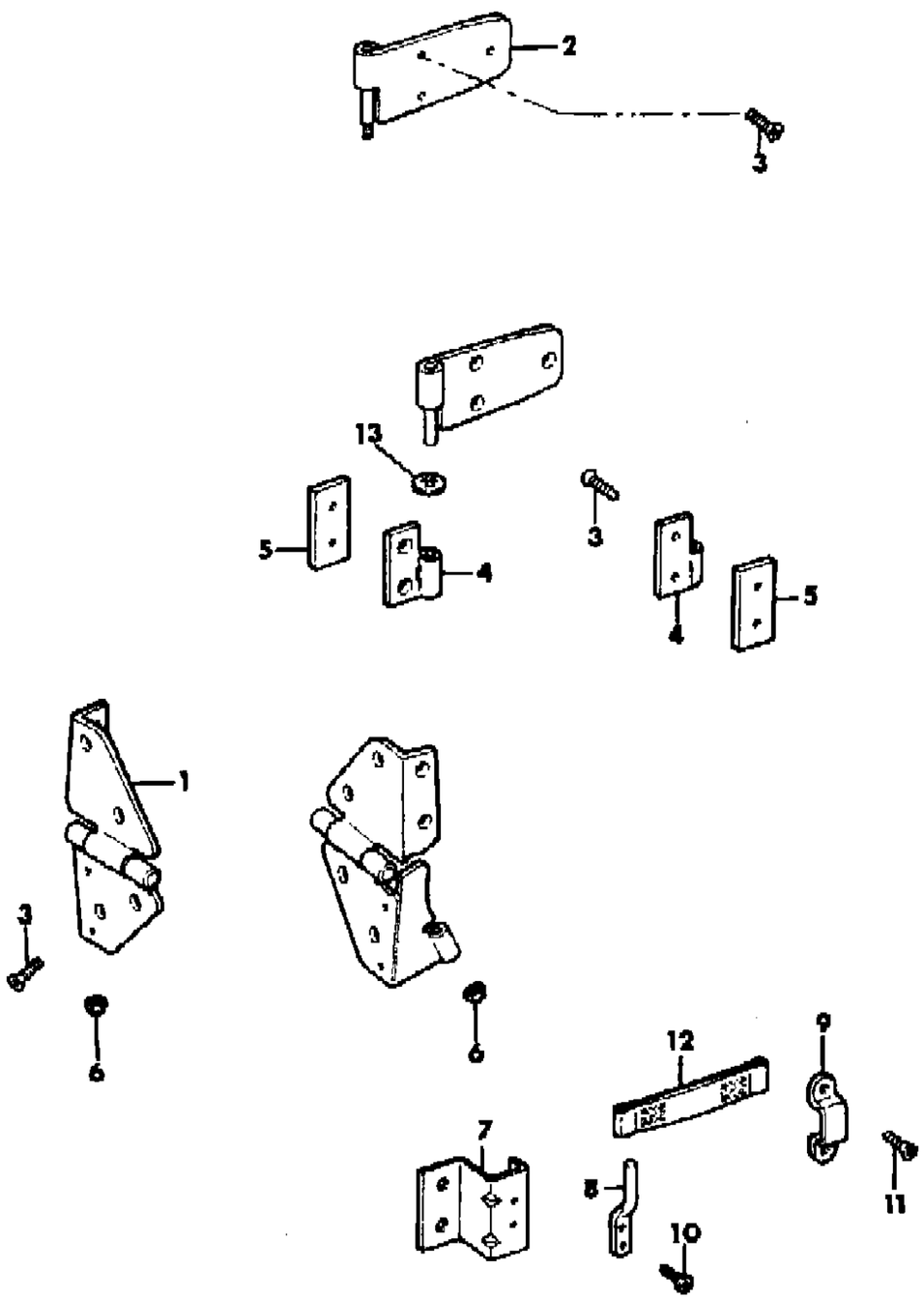

ITEM	PART NUMBER	QTY	BODY	MODEL	DESCRIPTION
1					HINGE, Upper Body Half
	J546 2424-5	1			Windshield Hinge Mounted Mirror
	J576 1944-5	1			Door Mounted Mirror
2					HINGE, Upper Door Half
	J546 2412-3	2			Windshield Hinge Mounted Mirror
	J576 1138-9	1			Door Mounted Mirror
3	J400 4956	AR			SCREW
4					HINGE, Lower Body Half
	J545 7098	1			Right
	J545 7097	1			Left
5	J545 9281	2			PLATE, Tapping
6	J400 7048	2			RING
7	J545 9280	2			BRACKET
8	J545 9286	2			PIN
9	J545 5264	2			LOOP, Footman ***
10	J400 6455	4			SCREW
11	J440 4995	4			SCREW
12	J545 9207	2			STRAP
13					SHIM
	J400 5677	AR			.06
	J400 5678	AR			.09

MODEL CODES

16=Cherokee 2 Dr.(1981-83)	78=Cherokee 4WD-4 Dr.(1984-86)	64=Comanche 2WD-6 Ft. Box(1986)	25=J-10 Truck 7 Ft. Box(1981-84)
17=Cherokee 2 Dr.(1981-83)	85=CJ-5 (1981-83)	66=Comanche 2WD-7 Ft. Box(1986)	26=J10 Truck 8 Ft. Box(1981-86)
73=Cherokee 2WD-2 Dr.(1984-86)	86=CJ-6(1981)	63=Comanche 4WD-6 Ft. Box(1986)	27=J-20 Truck 8 Ft. Box(1981-86)
74=Cherokee 2WD-4 Dr.(1984-86)	87=CJ-7(1981-86)	65=Comanche 4WD-7 Ft. Box(1986)	15=Wagoneer 4 Dr.(1981-83)
18=Cherokee 4 Dr.(1981-83)	88=CJ-8, Scrambler(1981-86)	15=Grand Wagoneer 4 Dr.(1984-86)	75=Wagoneer 4WD-4 Dr.(1984-86)
77=Cherokee 4WD-2 Dr.(1984-86)			

BODY
CJ=CJ-5, CJ-6, CJ-7, CJ-8, Scrambler(1981-86)
MJ=Comanche Pickup(1986)

STYLES
SJ=Wagoneer(1981-83), Grand Wagoneer(1984-86), Cherokee(1981-83), J-10, J-20(1981-86)
XJ=Wagoneer(1984-86), Cherokee(1984-86)

AR = Use as Required - = Non Illustrated Part P.A.R. = Paint as Required

« RETURN TO GROUP INDEX

MIRRORS, EXTERIOR CJ
Figure 23C-800

81J71 800

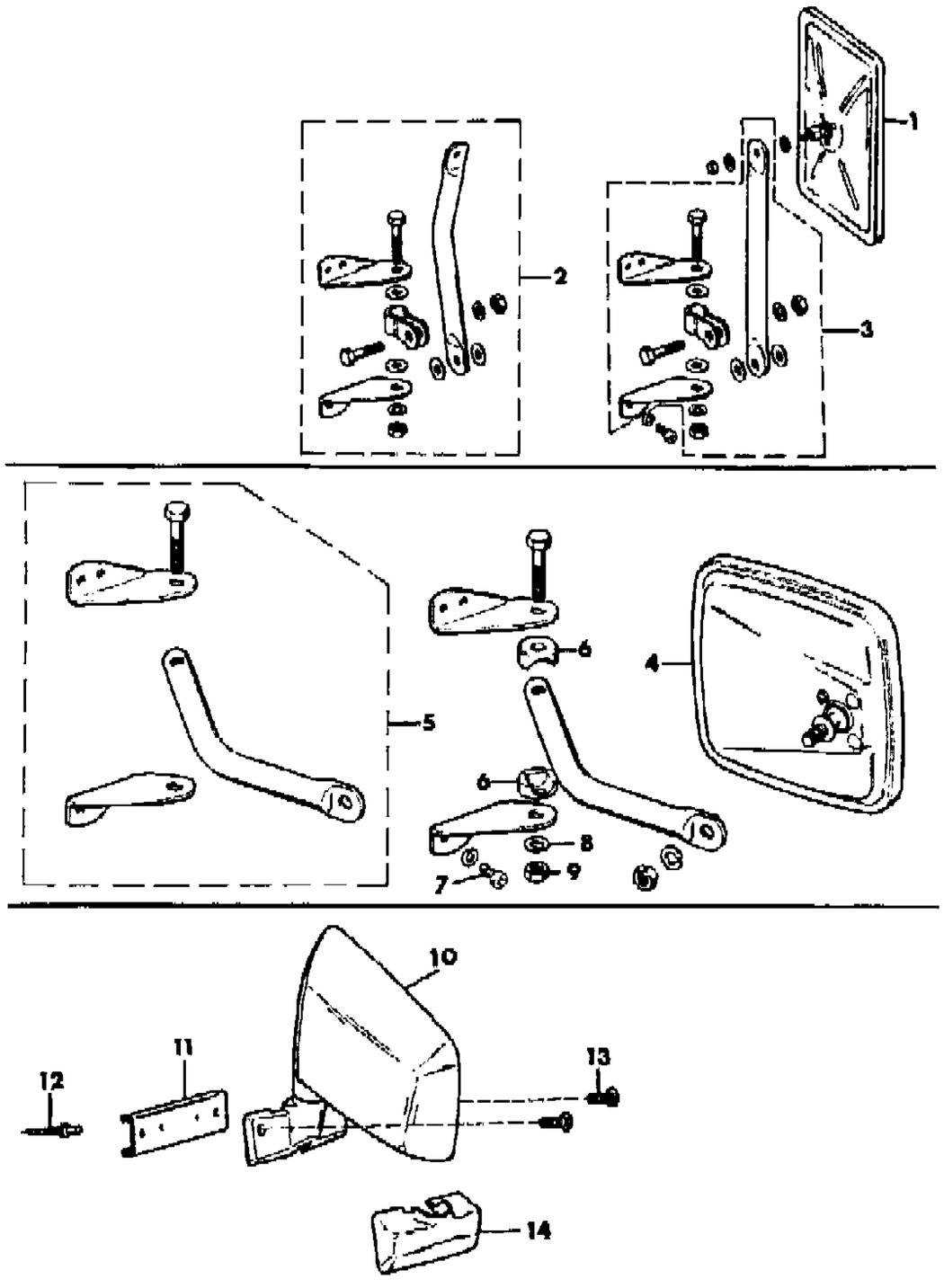

ITEM	PART NUMBER	QTY	BODY	MODEL	DESCRIPTION
1	J098 4032	2			MIRROR
2	J097 8516	2			ARM, Curved
3	J097 8518	2			ARM, Straight
4					MIRROR
	J546 2736	2			Primed
	J575 1193	2			Bright
	J546 2736	2			R.H. Drive, Australian Design Rules
	J575 1193	2			R.H. Drive
5					ARM
	J545 5302	1			Right, Primed
	J545 5301	1			Left, Primed
	J575 1195	1			Right, Bright
	J575 1194	1			Left, Bright
	J546 4244	1			Right, R.H. Drive
	J546 4252	1			Left, R.H. Drive
6	8350 0261	4			CLAMP
7	J400 6130	AR			SCREW
	J420 0323	AR			SCREW, Limited
	J400 5627	AR			SCREW, Export, ECE, Japan
8					WASHER
	J400 4904	AR			3/8
	J400 6897	AR			5/16
9					NUT
	J400 4905	AR			3/8-24
	J400 6806	AR			3/8-16
	J400 6896	AR			5/16-18
10	J813 4188-9	1			MIRROR
11	J576 1726	2			REINFORCEMENT
12	J400 4962	4			RIVET
13	J420 0323	4			SCREW
14	J067 4896	2			COVER

MODEL CODES

16=Cherokee 2 Dr.(1981-83)
17=Cherokee 2 Dr.(1981-83)
73=Cherokee 2WD-2 Dr.(1984-86)
74=Cherokee 2WD-4 Dr.(1984-86)
18=Cherokee 4 Dr.(1981-83)
77=Cherokee 4WD-2 Dr.(1984-86)
78=Cherokee 4WD-4 Dr.(1984-86)
85=CJ-5 (1981-83)
86=CJ-6(1981)
87=CJ-7(1981-86)
88=CJ-8, Scrambler(1981-86)
64=Comanche 2WD-6 Ft. Box(1986)
66=Comanche 2WD-7 Ft. Box(1986)
63=Comanche 4WD-6 Ft. Box(1986)
65=Comanche 4WD-7 Ft. Box(1986)
15=Grand Wagoneer 4 Dr.(1984-86)
25=J-10 Truck 7 Ft. Box(1981-84)
26=J10 Truck 8 Ft. Box(1981-86)
27=J-20 Truck 8 Ft. Box(1981-86)
15=Wagoneer 4 Dr.(1981-83)
75=Wagoneer 4WD-4 Dr.(1984-86)

BODY
CJ=CJ-5, CJ-6, CJ-7, CJ-8, Scrambler(1981-86)
MJ=Comanche Pickup(1986)

STYLES
SJ=Wagoneer(1981-83), Grand Wagoneer(1984-86), Cherokee(1981-83), J-10, J-20(1981-86)
XJ=Wagoneer(1984-86), Cherokee(1984-86)

AR = Use as Required - = Non Illustrated Part P.A.R. = Paint as Required

« RETURN TO GROUP INDEX

MIRRORS, EXTERIOR ECE, JAPAN CJ
Figure 23C-900

81J71 900

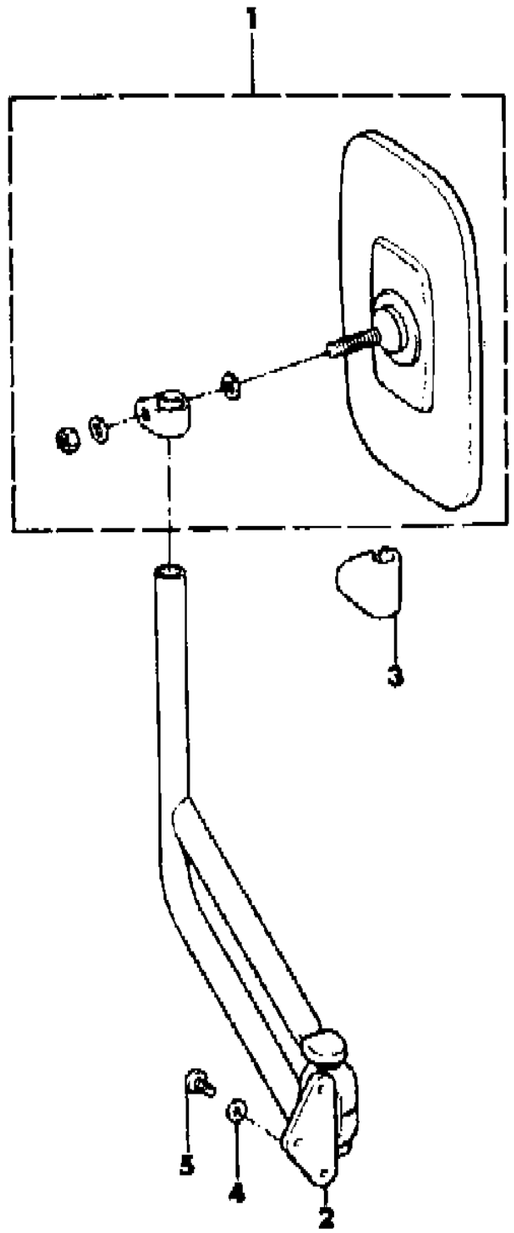

ITEM	PART NUMBER	QTY	BODY	MODEL	DESCRIPTION
1	J575 8195	2			MIRROR
2					ARM
	J575 8870	1			Right
	J575 8871	1			Left
3	J575 8953	2			CAP
4	J400 7044	6			WASHER
5	J400 5657	6			SCREW

MODEL CODES

16=Cherokee 2 Dr.(1981-83)	78=Cherokee 4WD-4 Dr.(1984-86)	64=Comanche 2WD-6 Ft. Box(1986)	25=J-10 Truck 7 Ft. Box(1981-84)
17=Cherokee 2 Dr.(1981-83)	85=CJ-5 (1981-83)	66=Comanche 2WD-7 Ft. Box(1986)	26=J10 Truck 8 Ft. Box(1981-86)
73=Cherokee 2WD-2 Dr.(1984-86)	86=CJ-6(1981)	63=Comanche 4WD-6 Ft. Box(1986)	27=J-20 Truck 8 Ft. Box(1981-86)
74=Cherokee 2WD-4 Dr.(1984-86)	87=CJ-7(1981-86)	65=Comanche 4WD-7 Ft. Box(1986)	15=Wagoneer 4 Dr.(1981-83)
18=Cherokee 4 Dr.(1981-83)	88=CJ-8, Scrambler(1981-86)	15=Grand Wagoneer 4 Dr.(1984-86)	75=Wagoneer 4WD-4 Dr.(1984-86)
77=Cherokee 4WD-2 Dr.(1984-86)			

BODY
CJ=CJ-5, CJ-6, CJ-7, CJ-8, Scrambler(1981-86)
MJ=Comanche Pickup(1986)

STYLES
SJ=Wagoneer(1981-83), Grand Wagoneer(1984-86), Cherokee(1981-83), J-10, J-20(1981-86)
XJ=Wagoneer(1984-86), Cherokee(1984-86)

AR = Use as Required - = Non Illustrated Part P.A.R. = Paint as Required

« RETURN TO GROUP INDEX

DOOR, REAR, HANDLES AND LATCHES VERTICAL, WITH MEYER CAB CJ-5
Figure 23C-1000

81J71 1000

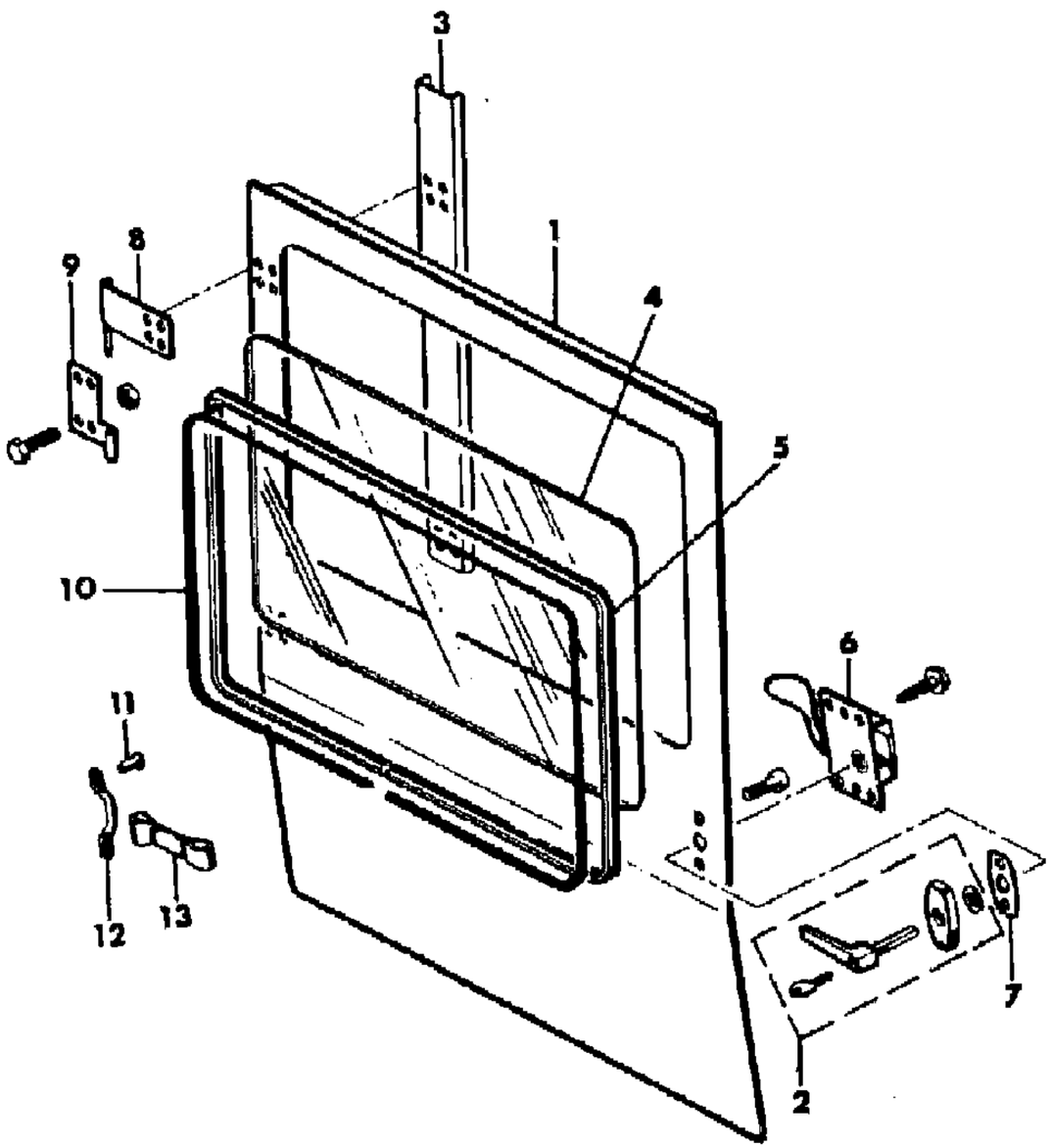

ITEM	PART NUMBER	QTY	BODY	MODEL	DESCRIPTION
1	J204 3129	1			DOOR
2	J204 3663	1			HANDLE
3	J204 3112	1			REINFORCEMENT
4	J204 3654	1			GLASS
5	J204 3655	1			SEAL
6	J204 3309	1			LATCH, Door
7	J204 3665	1			PLATE
8	J204 3110	1			HINGE, Upper
9	J204 2017	1			HINGE, Lower
10	J204 3656	1			MOULDING
11	J204 1143	1			FASTENER
12	J204 2053	1			LOOP, Footman ***
13	J204 2052	1			STRAP

MODEL CODES

16=Cherokee 2 Dr.(1981-83)
17=Cherokee 2 Dr.(1981-83)
73=Cherokee 2WD-2 Dr.(1984-86)
74=Cherokee 2WD-4 Dr.(1984-86)
18=Cherokee 4 Dr.(1981-83)
77=Cherokee 4WD-2 Dr.(1984-86)
78=Cherokee 4WD-4 Dr.(1984-86)
85=CJ-5 (1981-83)
86=CJ-6(1981)
87=CJ-7(1981-86)
88=CJ-8, Scrambler(1981-86)
64=Comanche 2WD-6 Ft. Box(1986)
66=Comanche 2WD-7 Ft. Box(1986)
63=Comanche 4WD-6 Ft. Box(1986)
65=Comanche 4WD-7 Ft. Box(1986)
15=Grand Wagoneer 4 Dr.(1984-86)
25=J-10 Truck 7 Ft. Box(1981-84)
26=J10 Truck 8 Ft. Box(1981-86)
27=J-20 Truck 8 Ft. Box(1981-86)
15=Wagoneer 4 Dr.(1981-83)
75=Wagoneer 4WD-4 Dr.(1984-86)

BODY
CJ=CJ-5, CJ-6, CJ-7, CJ-8, Scrambler(1981-86)
MJ=Comanche Pickup(1986)

STYLES
SJ=Wagoneer(1981-83), Grand Wagoneer(1984-86), Cherokee(1981-83), J-10, J-20(1981-86)
XJ=Wagoneer(1984-86), Cherokee(1984-86)

AR = Use as Required - = Non Illustrated Part P.A.R. = Paint as Required

« RETURN TO GROUP INDEX

DOOR, REAR, HANDLES AND LATCHES WORLD CAB, EXPORT, LEFT/RIGHT HAND DRIVE CJ-7,8
Figure 23C-1100

81J71 1100

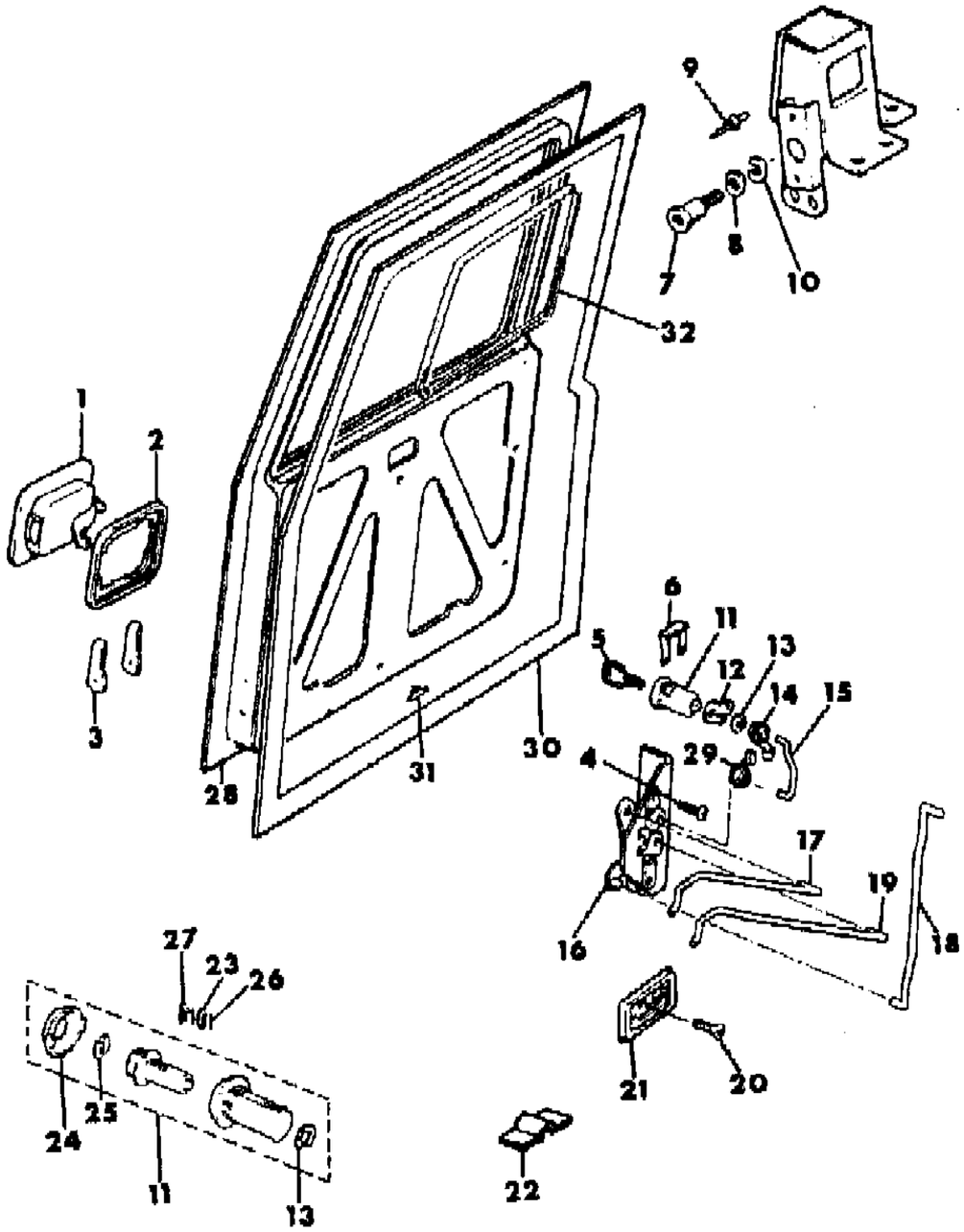

ITEM	PART NUMBER	QTY	BODY	MODEL	DESCRIPTION
1					HANDLE
	J805 2561	1			R.H. Drive
	J805 2560	1			L.H. Drive
2	J575 8174	1			GASKET
3	J575 8175	2			KEEPER ***
4	J018 0020	4			SCREW
5	J364 1913	1			KEY, Uncoded
6	J351 6003	1			RETAINER, Lock
7	J575 8191	1			STRIKER, Door
8	J575 8192	1			PLATE, Striker
9	J400 6990	2			RIVET
10	J575 8193	1			SHIM
11	J812 2874	1			CYLINDER, Lock
12					LEVER
	J805 2472	1			R.H. Drive
	J805 2471	1			L.H. Drive
13	J400 2250	1			RETAINER, Lock
14					CLIP, w/Bushing
	J400 4522	2			R.H. Drive ***
	J400 4533	2			L.H. Drive
15	J805 2459	1			ROD, Lock Cylinder
16					LATCH, Door
	J805 2569	1			R.H. Drive
	J805 2562	1			L.H. Drive
17					ROD, Locking
	J805 2461	1			R.H. Drive
	J805 2460	1			L.H. Drive
18	8350 1148	1			ROD, Latch Release
19					ROD, R/Control
	J805 2463	1			R.H. Drive
	J805 2462	1			L.H. Drive
20	J400 6870	1			SCREW
21					HANDLE
	T065 0261	1			R.H. Drive
	T065 0326	1			L.H. Drive
22	J805 2241	2			CLIP
23	J812 2881	AR			SPRING
24	J812 7677	1			CAP, Cylinder
25	J813 8585	1			SHUTTER, Lock ***

MODEL CODES

16=Cherokee 2 Dr.(1981-83)
17=Cherokee 2 Dr.(1981-83)
73=Cherokee 2WD-2 Dr.(1984-86)
74=Cherokee 2WD-4 Dr.(1984-86)
18=Cherokee 4 Dr.(1981-83)
77=Cherokee 4WD-2 Dr.(1984-86)
78=Cherokee 4WD-4 Dr.(1984-86)
85=CJ-5 (1981-83)
86=CJ-6(1981)
87=CJ-7(1981-86)
88=CJ-8, Scrambler(1981-86)
64=Comanche 2WD-6 Ft. Box(1986)
66=Comanche 2WD-7 Ft. Box(1986)
63=Comanche 4WD-6 Ft. Box(1986)
65=Comanche 4WD-7 Ft. Box(1986)
15=Grand Wagoneer 4 Dr.(1984-86)
25=J-10 Truck 7 Ft. Box(1981-84)
26=J10 Truck 8 Ft. Box(1981-86)
27=J-20 Truck 8 Ft. Box(1981-86)
15=Wagoneer 4 Dr.(1981-83)
75=Wagoneer 4WD-4 Dr.(1984-86)

BODY
CJ=CJ-5, CJ-6, CJ-7, CJ-8, Scrambler(1981-86)
MJ=Comanche Pickup(1986)

STYLES
SJ=Wagoneer(1981-83), Grand Wagoneer(1984-86), Cherokee(1981-83), J-10, J-20(1981-86)
XJ=Wagoneer(1984-86), Cherokee(1984-86)

AR = Use as Required - = Non Illustrated Part P.A.R. = Paint as Required

DOOR, REAR, HANDLES AND LATCHES WORLD CAB, EXPORT, LEFT/RIGHT HAND DRIVE CJ-7,8
Figure 23C-1100

81J71 1100

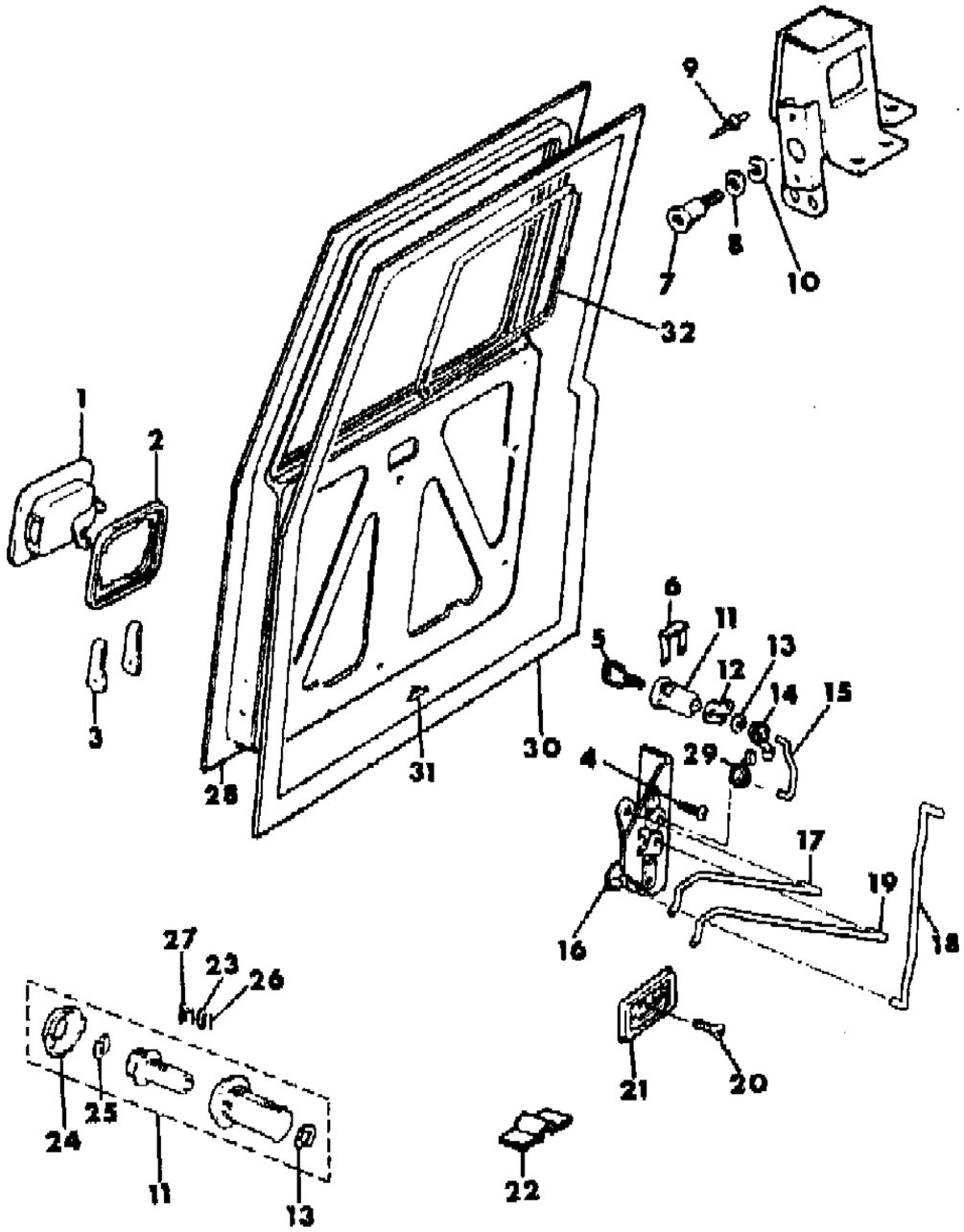

ITEM	PART NUMBER	QTY	BODY	MODEL	DESCRIPTION
26					TUMBLER, Lock ***
	J812 2876	AR			No. 1
	J812 2877	AR			No. 2
	J812 2878	AR			No. 3
	J812 2879	AR			No. 4
	J812 2880	AR			No. 5
27	J812 2875	1			RETAINER, Tumbler
28					DOOR
	J805 2133	1			R.H. Drive
	J805 2132	1			L.H. Drive
29	J400 4532	1			CLIP, w/Bushing
30	J805 2124	1			WEATHERSEAL ***
31	J400 1916	AR			FASTENER
32					WEATHERSTRIP, Fixed Glass
	J805 2122	1			CJ-7
	J805 2188	1			CJ-8

MODEL CODES

16=Cherokee 2 Dr.(1981-83)
17=Cherokee 2 Dr.(1981-83)
73=Cherokee 2WD-2 Dr.(1984-86)
74=Cherokee 2WD-4 Dr.(1984-86)
18=Cherokee 4 Dr.(1981-83)
77=Cherokee 4WD-2 Dr.(1984-86)
78=Cherokee 4WD-4 Dr.(1984-86)
85=CJ-5 (1981-83)
86=CJ-6(1981)
87=CJ-7(1981-86)
88=CJ-8, Scrambler(1981-86)
64=Comanche 2WD-6 Ft. Box(1986)
66=Comanche 2WD-7 Ft. Box(1986)
63=Comanche 4WD-6 Ft. Box(1986)
65=Comanche 4WD-7 Ft. Box(1986)
15=Grand Wagoneer 4 Dr.(1984-86)
25=J-10 Truck 7 Ft. Box(1981-84)
26=J10 Truck 8 Ft. Box(1981-86)
27=J-20 Truck 8 Ft. Box(1981-86)
15=Wagoneer 4 Dr.(1981-83)
75=Wagoneer 4WD-4 Dr.(1984-86)

BODY
CJ=CJ-5, CJ-6, CJ-7, CJ-8, Scrambler(1981-86)
MJ=Comanche Pickup(1986)

STYLES
SJ=Wagoneer(1981-83), Grand Wagoneer(1984-86), Cherokee(1981-83), J-10, J-20(1981-86)
XJ=Wagoneer(1984-86), Cherokee(1984-86)

AR = Use as Required - = Non Illustrated Part P.A.R. = Paint as Required

« RETURN TO GROUP INDEX

HINGES, REAR DOOR WORLD CAB, EXPORT CJ-7,8
Figure 23C-1200

81J71 1200

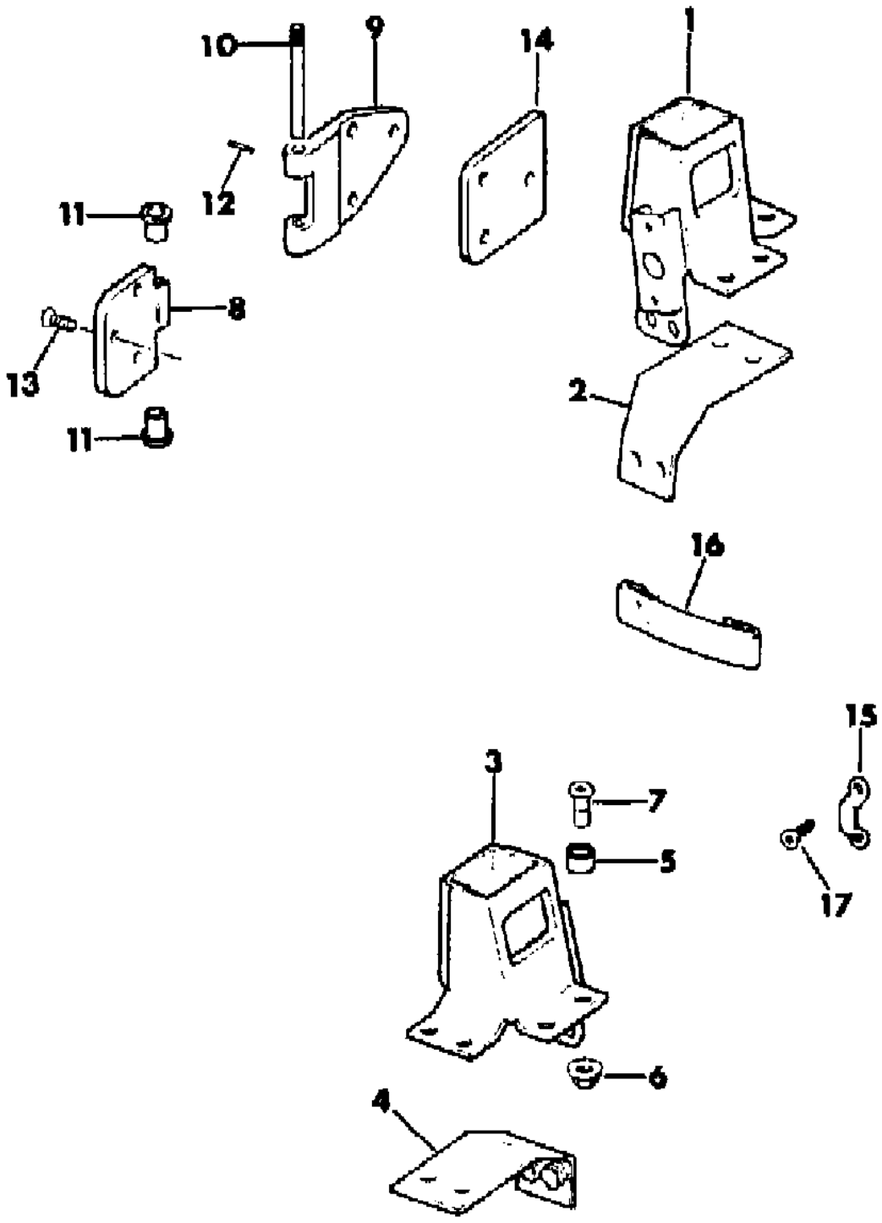

ITEM	PART NUMBER	QTY	BODY	MODEL	DESCRIPTION
1	8350 0183	1			BRACKET, Striker Mtg.
2	J805 2409	1			REINFORCEMENT
3	J805 2568	1			REINFORCEMENT
4	J805 2408	1			REINFORCEMENT
5	J400 6826	1			WASHER
6	J400 4747	1			NUT
7	J400 5651	8			BOLT
8	J805 2160	2			HINGE
9	J805 2161	2			HIHGE ***
10	J805 2194	2			PIN
11	J805 2193	4			BEARING
12	J027 3936	2			PIN
13	J400 5831	6			SCREW
14	J805 2037	2			PLATE, Tapping
15	5501 3666	2			LOOP, Footman ***
16	J545 9207	1			STRAP
17	J400 7088	4			SCREW

MODEL CODES

16=Cherokee 2 Dr.(1981-83)
17=Cherokee 2 Dr.(1981-83)
73=Cherokee 2WD-2 Dr.(1984-86)
74=Cherokee 2WD-4 Dr.(1984-86)
18=Cherokee 4 Dr.(1981-83)
77=Cherokee 4WD-2 Dr.(1984-86)
78=Cherokee 4WD-4 Dr.(1984-86)
85=CJ-5 (1981-83)
86=CJ-6(1981)
87=CJ-7(1981-86)
88=CJ-8, Scrambler(1981-86)
64=Comanche 2WD-6 Ft. Box(1986)
66=Comanche 2WD-7 Ft. Box(1986)
63=Comanche 4WD-6 Ft. Box(1986)
65=Comanche 4WD-7 Ft. Box(1986)
15=Grand Wagoneer 4 Dr.(1984-86)
25=J-10 Truck 7 Ft. Box(1981-84)
26=J10 Truck 8 Ft. Box(1981-86)
27=J-20 Truck 8 Ft. Box(1981-86)
15=Wagoneer 4 Dr.(1981-83)
75=Wagoneer 4WD-4 Dr.(1984-86)

BODY
CJ=CJ-5, CJ-6, CJ-7, CJ-8, Scrambler(1981-86)
MJ=Comanche Pickup(1986)

STYLES
SJ=Wagoneer(1981-83), Grand Wagoneer(1984-86), Cherokee(1981-83), J-10, J-20(1981-86)
XJ=Wagoneer(1984-86), Cherokee(1984-86)

AR = Use as Required - = Non Illustrated Part P.A.R. = Paint as Required

« RETURN TO GROUP INDEX

DOORS, FRONT AND REAR FOUR DOOR XJ CHEROKEE, XJ WAGONEER
Figure 23C-1300

81J71 1300

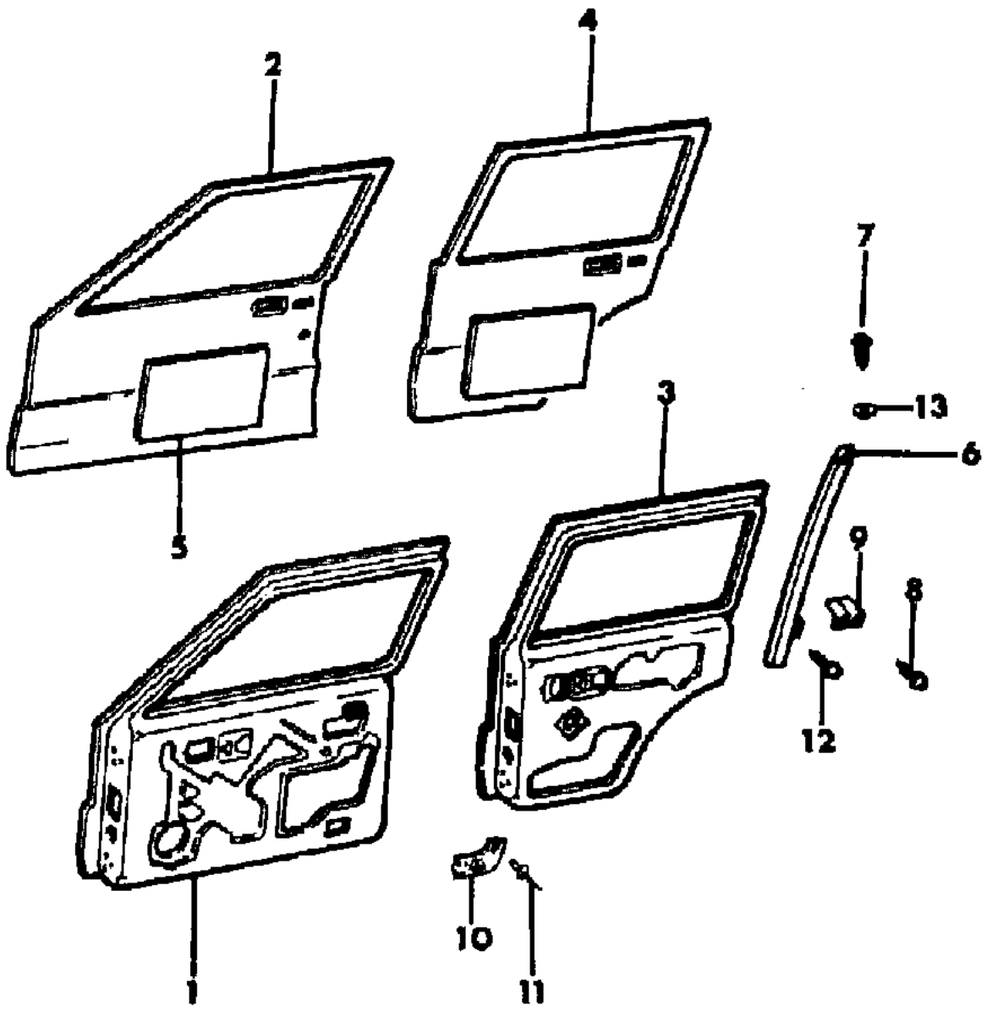

ITEM	PART NUMBER	QTY	BODY	MODEL	DESCRIPTION
1	5700 0108-9	1			SHELL, Front Door
2	5700 0098-9	1			PANEL, Front Repair
3	5700 0112-3	1			SHELL, Rear Door
4	5700 0106-7	1			PANEL, Rear Repair
5	5500 1254	4			PAD, Deadener
6	5500 2350-1	1			BAR, Division
7	3420 2035	2			SCREW
8	3420 1450	4			SCREW
9	5500 3650	2			RETAINER
10	5500 1278-9	1			BRACKET, Armrest
11	3420 1353	4			RIVET
12	3420 1301	2			SCREW
13	J400 3089	2			WASHER

MODEL CODES

16=Cherokee 2 Dr.(1981-83)
17=Cherokee 2 Dr.(1981-83)
73=Cherokee 2WD-2 Dr.(1984-86)
74=Cherokee 2WD-4 Dr.(1984-86)
18=Cherokee 4 Dr.(1981-83)
77=Cherokee 4WD-2 Dr.(1984-86)
78=Cherokee 4WD-4 Dr.(1984-86)
85=CJ-5 (1981-83)
86=CJ-6(1981)
87=CJ-7(1981-86)
88=CJ-8, Scrambler(1981-86)
64=Comanche 2WD-6 Ft. Box(1986)
66=Comanche 2WD-7 Ft. Box(1986)
63=Comanche 4WD-6 Ft. Box(1986)
65=Comanche 4WD-7 Ft. Box(1986)
15=Grand Wagoneer 4 Dr.(1984-86)
25=J-10 Truck 7 Ft. Box(1981-84)
26=J10 Truck 8 Ft. Box(1981-86)
27=J-20 Truck 8 Ft. Box(1981-86)
15=Wagoneer 4 Dr.(1981-83)
75=Wagoneer 4WD-4 Dr.(1984-86)

BODY
CJ=CJ-5, CJ-6, CJ-7, CJ-8, Scrambler(1981-86)
MJ=Comanche Pickup(1986)

STYLES
SJ=Wagoneer(1981-83), Grand Wagoneer(1984-86), Cherokee(1981-83), J-10, J-20(1981-86)
XJ=Wagoneer(1984-86), Cherokee(1984-86)

AR = Use as Required - = Non Illustrated Part P.A.R. = Paint as Required

« RETURN TO GROUP INDEX

DOOR, FRONT TWO DOOR XJ CHEROKEE
Figure 23C-1400

81J71 1400

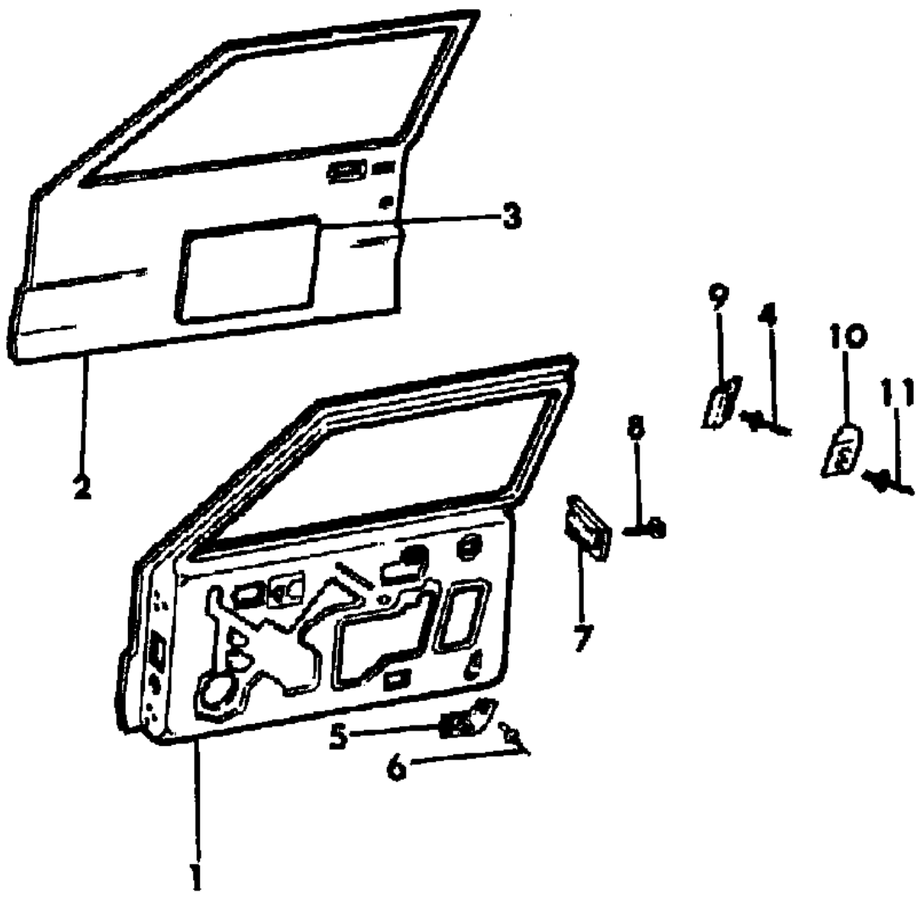

ITEM	PART NUMBER	QTY	BODY	MODEL	DESCRIPTION
1	5700 0110-1	1			SHELL, Door
2	5700 0102-3	1			PANEL, Repair
3	5500 1254	2			PAD, Deadener
4	3420 1384	2			RIVET
5	5500 1278-9	1			BRACKET, Armrest
6	3420 1353	4			RIVET
7	5500 6224-5	1			SPACER
8	1150 0055	4			SCREW
9	5500 6216	2			REINFORCEMENT
10	5500 6214-5	1			SPACER
11	J400 6543	4			RIVET

MODEL CODES

16=Cherokee 2 Dr.(1981-83)
17=Cherokee 2 Dr.(1981-83)
73=Cherokee 2WD-2 Dr.(1984-86)
74=Cherokee 2WD-4 Dr.(1984-86)
18=Cherokee 4 Dr.(1981-83)
77=Cherokee 4WD-2 Dr.(1984-86)
78=Cherokee 4WD-4 Dr.(1984-86)
85=CJ-5 (1981-83)
86=CJ-6(1981)
87=CJ-7(1981-86)
88=CJ-8, Scrambler(1981-86)
64=Comanche 2WD-6 Ft. Box(1986)
66=Comanche 2WD-7 Ft. Box(1986)
63=Comanche 4WD-6 Ft. Box(1986)
65=Comanche 4WD-7 Ft. Box(1986)
15=Grand Wagoneer 4 Dr.(1984-86)
25=J-10 Truck 7 Ft. Box(1981-84)
26=J10 Truck 8 Ft. Box(1981-86)
27=J-20 Truck 8 Ft. Box(1981-86)
15=Wagoneer 4 Dr.(1981-83)
75=Wagoneer 4WD-4 Dr.(1984-86)

BODY
CJ=CJ-5, CJ-6, CJ-7, CJ-8, Scrambler(1981-86)
MJ=Comanche Pickup(1986)

STYLES
SJ=Wagoneer(1981-83), Grand Wagoneer(1984-86), Cherokee(1981-83), J-10, J-20(1981-86)
XJ=Wagoneer(1984-86), Cherokee(1984-86)

AR = Use as Required - = Non Illustrated Part P.A.R. = Paint as Required

« RETURN TO GROUP INDEX

DOOR, FRONT COMANCHE
Figure 23C-1500

81J71 1500

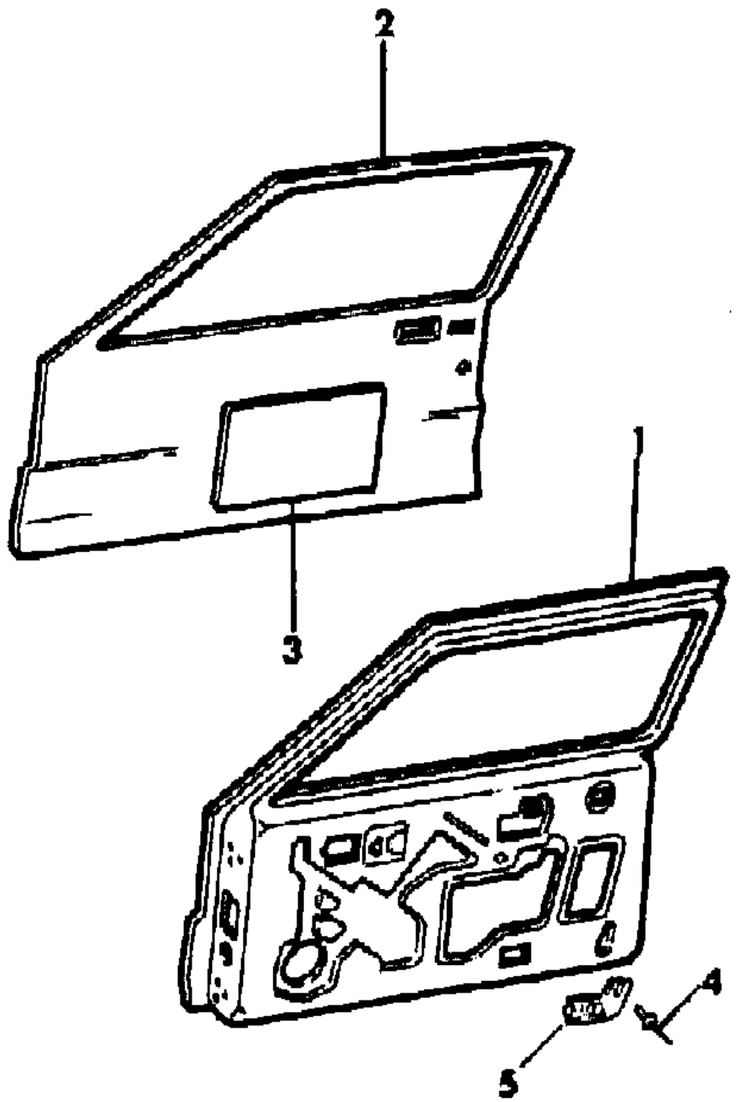

ITEM	PART NUMBER	QTY	BODY	MODEL	DESCRIPTION
1	5700 0108-9	1			SHELL, Door
2	8351 0194-5	1			PANEL, Repair
3	5500 1254	2			PAD, Deadener
4	3420 1353	4			RIVET
5	5500 1278-9	1			BRACKET, Armrest

MODEL CODES

16=Cherokee 2 Dr.(1981-83)
17=Cherokee 2 Dr.(1981-83)
73=Cherokee 2WD-2 Dr.(1984-86)
74=Cherokee 2WD-4 Dr.(1984-86)
18=Cherokee 4 Dr.(1981-83)
77=Cherokee 4WD-2 Dr.(1984-86)
78=Cherokee 4WD-4 Dr.(1984-86)
85=CJ-5 (1981-83)
86=CJ-6(1981)
87=CJ-7(1981-86)
88=CJ-8, Scrambler(1981-86)
64=Comanche 2WD-6 Ft. Box(1986)
66=Comanche 2WD-7 Ft. Box(1986)
63=Comanche 4WD-6 Ft. Box(1986)
65=Comanche 4WD-7 Ft. Box(1986)
15=Grand Wagoneer 4 Dr.(1984-86)
25=J-10 Truck 7 Ft. Box(1981-84)
26=J10 Truck 8 Ft. Box(1981-86)
27=J-20 Truck 8 Ft. Box(1981-86)
15=Wagoneer 4 Dr.(1981-83)
75=Wagoneer 4WD-4 Dr.(1984-86)

BODY
CJ=CJ-5, CJ-6, CJ-7, CJ-8, Scrambler(1981-86)
MJ=Comanche Pickup(1986)

STYLES
SJ=Wagoneer(1981-83), Grand Wagoneer(1984-86), Cherokee(1981-83), J-10, J-20(1981-86)
XJ=Wagoneer(1984-86), Cherokee(1984-86)

AR = Use as Required - = Non Illustrated Part P.A.R. = Paint as Required

« RETURN TO GROUP INDEX

HINGES, DOOR FRONT AND REAR XJ CHEROKEE, XJ WAGONEER, COMANCHE
Figure 23C-1600

81J71 1600

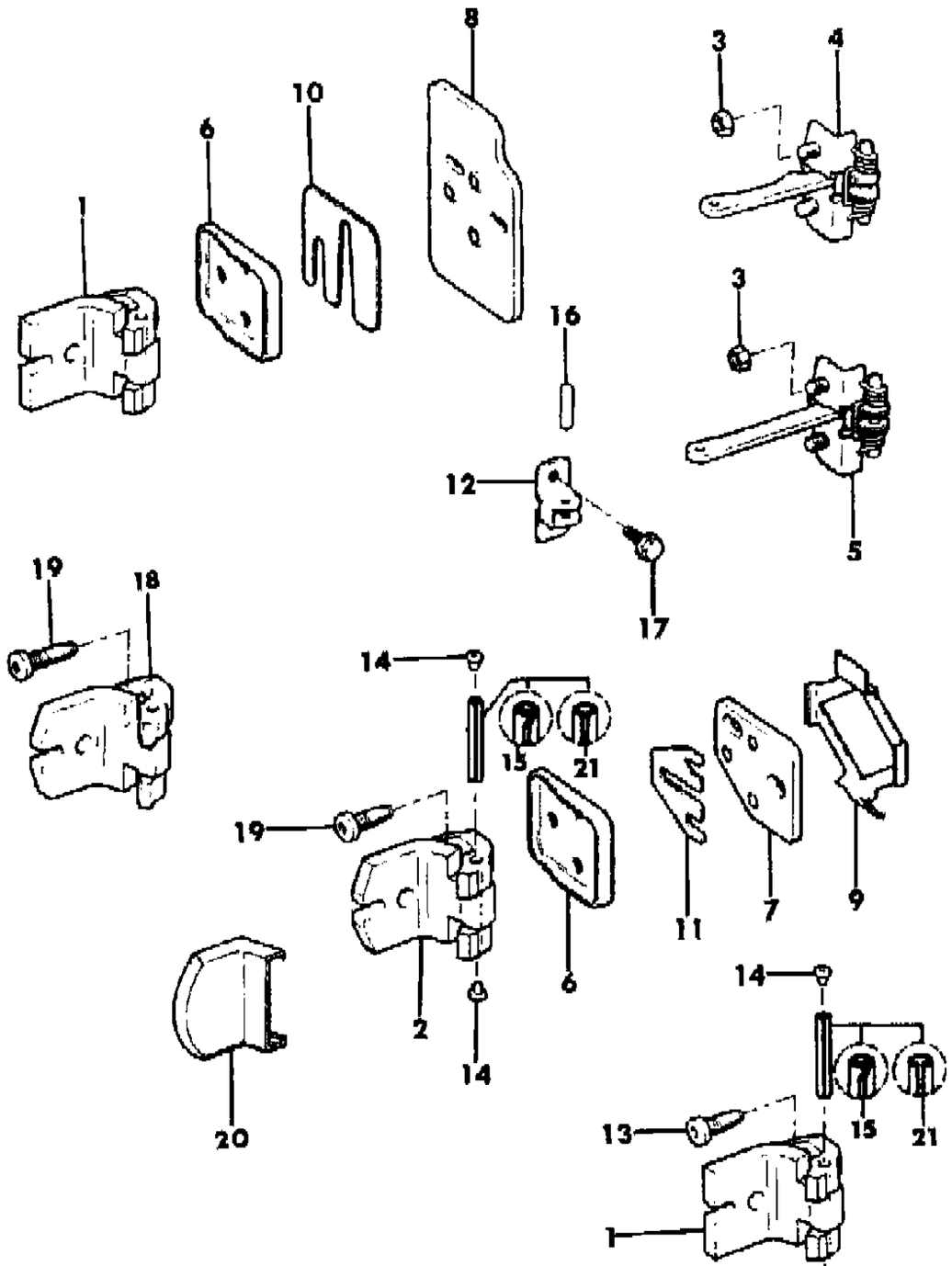

ITEM	PART NUMBER	QTY	BODY	MODEL	DESCRIPTION
1	5500 4626	4			HINGE, Front Door
2	5500 0762	2			HINGE, Rear Door Lower
3	3420 1866	8			NUT
4	5500 0783	2			ARM, Front Check
5	5500 0818	2			ARM, Rear Check
6	5500 4597	8			PLATE, Shim
7	5500 0248-9	1			PLATE, Hinge Mtg.
8	5500 4600-1	1			PLATE, Hinge Mtg.
9	5500 0264	4			RETAINER
10					SHIM
	5500 5658	AR			.65mm
	5500 4920	AR			1.4mm
11	5500 1223	AR			SHIM
12	5500 2361	4			BRACKET, Check Arm
13					BOLT
	3420 1771	AR			.30mm
	3420 1987	AR			.36mm
14	3420 2314	16			PLUG, Hinge Pin
15	5500 0765	8			PIN, Hinge
16					PIN, Check Arm
	J941 2281	4			1984-85
	5501 2900	4			1986
17					SCREW
	1150 5117	8			1984-85
	3420 1756	8			1986
18	5500 5218	2			HINGE, Rear Door Upper
19	3420 1987	6			BOLT
20	5500 6643	4			COVER, Rear Hinge
21	5500 8099	8			PIN, Hinge

MODEL CODES

16=Cherokee 2 Dr.(1981-83)
17=Cherokee 2 Dr.(1981-83)
73=Cherokee 2WD-2 Dr.(1984-86)
74=Cherokee 2WD-4 Dr.(1984-86)
18=Cherokee 4 Dr.(1981-83)
77=Cherokee 4WD-2 Dr.(1984-86)
78=Cherokee 4WD-4 Dr.(1984-86)
85=CJ-5 (1981-83)
86=CJ-6(1981)
87=CJ-7(1981-86)
88=CJ-8, Scrambler(1981-86)
64=Comanche 2WD-6 Ft. Box(1986)
66=Comanche 2WD-7 Ft. Box(1986)
63=Comanche 4WD-6 Ft. Box(1986)
65=Comanche 4WD-7 Ft. Box(1986)
15=Grand Wagoneer 4 Dr.(1984-86)
25=J-10 Truck 7 Ft. Box(1981-84)
26=J10 Truck 8 Ft. Box(1981-86)
27=J-20 Truck 8 Ft. Box(1981-86)
15=Wagoneer 4 Dr.(1981-83)
75=Wagoneer 4WD-4 Dr.(1984-86)

BODY
CJ=CJ-5, CJ-6, CJ-7, CJ-8, Scrambler(1981-86)
MJ=Comanche Pickup(1986)

STYLES
SJ=Wagoneer(1981-83), Grand Wagoneer(1984-86), Cherokee(1981-83), J-10, J-20(1981-86)
XJ=Wagoneer(1984-86), Cherokee(1984-86)

AR = Use as Required - = Non Illustrated Part P.A.R. = Paint as Required

« RETURN TO GROUP INDEX

DOORS, HANDLES AND ACTUATORS CHEROKEE, WAGONEER, COMANCHE
Figure 23C-1700

81J71 1700

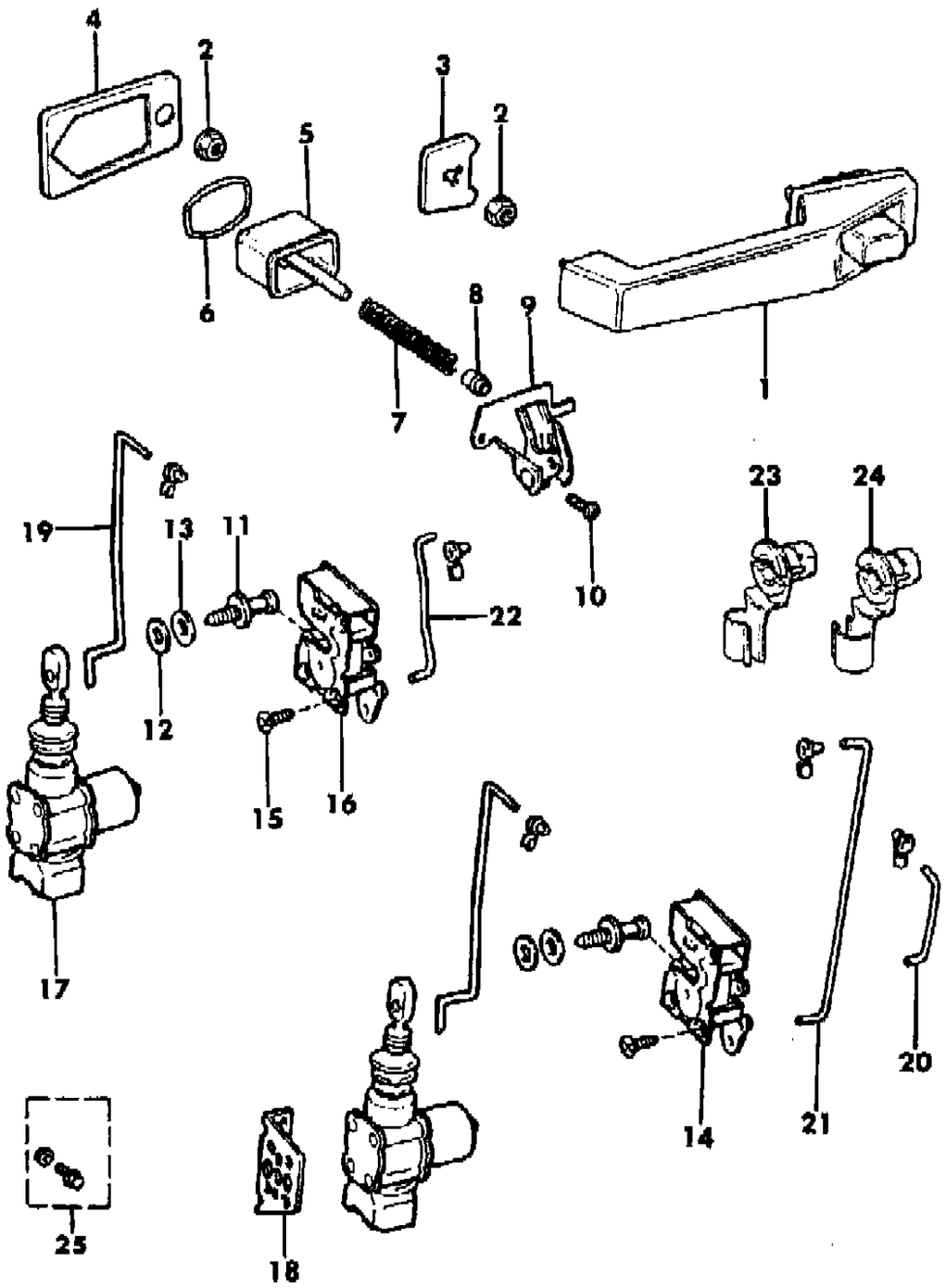

ITEM	PART NUMBER	QTY	BODY	MODEL	DESCRIPTION
1					HANDLE, Exterior
	5500 7466-7	1			Black, Plastic
	5500 2378-9	1			Black, Metal
	5500 0560-1	1			Bright
2	J420 0306	8			NUT
3	5500 2180	4			GASKET, Front
4	5500 2181	4			GASKET, Rear
5					BUTTON, Push
	5500 7469	4			Black, Plastic
	5500 2305	4			Black, Metal
	5500 2173	4			Bright
6	5500 2176	4			GASKET
7	5500 2177	4			SPRING
8	5500 2178	4			BUSHING
9	5500 2188-9	1			BELLCRANK
10	3420 1339	4			SCREW
11	5500 2371	4			STRIKER, Door
12	J400 2073	4			WASHER
13	J400 2057	8			WASHER
14	5500 0766-7	1			LATCH, Front Door
15	3420 1755	12			SCREW
16	5500 0570-1	1			LATCH, Rear Door
17	J813 4627	AR			ACTUATOR, Lock
18	J371 9474	AR			BRACKET, Actuator
19					ROD, Actuator
	5500 0780-1	1			Four Door and Truck
	5500 0836-7	1			Two Door
20					ROD, Lock Cylinder
	5500 2004-5	1			Four Door and Truck
	5500 0832-3	1			Two Door
21					ROD
	5500 1954-5	1			Four Door and Truck
	5500 0563	2			Two Door
22	5500 1968	2			ROD, Four Door
23	J400 4532	AR			CLIP, w/Bushing
24	J400 4533	AR			CLIP, w/Bushing
25	J813 0358	1			PACKAGE, Fastener

MODEL CODES

16=Cherokee 2 Dr.(1981-83)
17=Cherokee 2 Dr.(1981-83)
73=Cherokee 2WD-2 Dr.(1984-86)
74=Cherokee 2WD-4 Dr.(1984-86)
18=Cherokee 4 Dr.(1981-83)
77=Cherokee 4WD-2 Dr.(1984-86)
78=Cherokee 4WD-4 Dr.(1984-86)
85=CJ-5 (1981-83)
86=CJ-6(1981)
87=CJ-7(1981-86)
88=CJ-8, Scrambler(1981-86)
64=Comanche 2WD-6 Ft. Box(1986)
66=Comanche 2WD-7 Ft. Box(1986)
63=Comanche 4WD-6 Ft. Box(1986)
65=Comanche 4WD-7 Ft. Box(1986)
15=Grand Wagoneer 4 Dr.(1984-86)
25=J-10 Truck 7 Ft. Box(1981-84)
26=J10 Truck 8 Ft. Box(1981-86)
27=J-20 Truck 8 Ft. Box(1981-86)
15=Wagoneer 4 Dr.(1981-83)
75=Wagoneer 4WD-4 Dr.(1984-86)

BODY
CJ=CJ-5, CJ-6, CJ-7, CJ-8, Scrambler(1981-86)
MJ=Comanche Pickup(1986)

STYLES
SJ=Wagoneer(1981-83), Grand Wagoneer(1984-86), Cherokee(1981-83), J-10, J-20(1981-86)
XJ=Wagoneer(1984-86), Cherokee(1984-86)

AR = Use as Required - = Non Illustrated Part P.A.R. = Paint as Required

« RETURN TO GROUP INDEX

DOOR, HANDLES AND CONTROLS XJ CHEROKEE, XJ WAGONEER, COMANCHE
Figure 23C-1800

81J71 1800

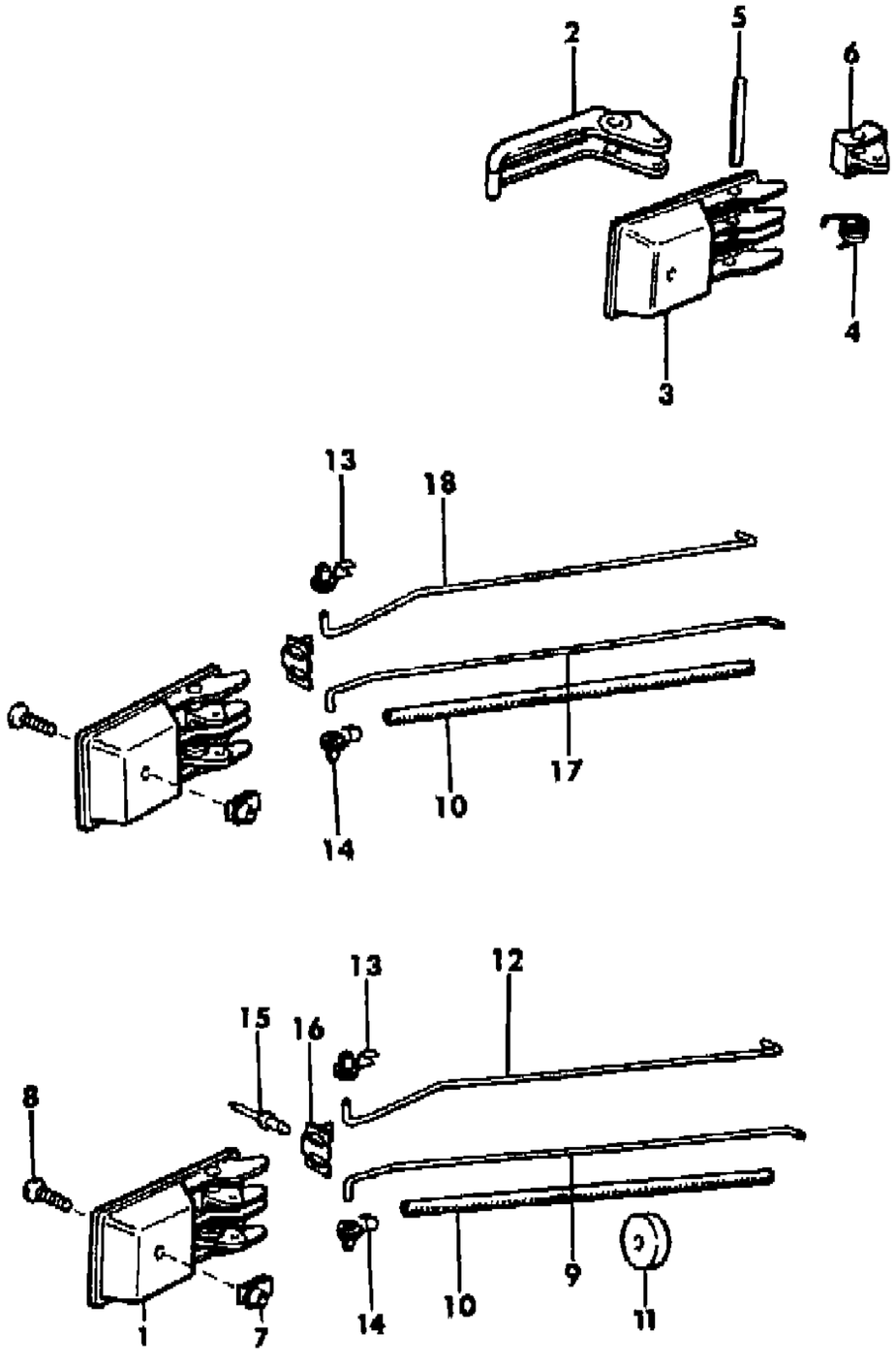

ITEM	PART NUMBER	QTY	BODY	MODEL	DESCRIPTION
1	5500 0870-1	2			HANDLE, R/Control
2	5500 2182-3	2			HANDLE
3	5500 2154-5	2			CUP
4	5500 2184	4			SPRING
5	5500 2873	4			PIN
6	5500 2186-7	2			BUTTON
7	1150 0654	4			NUT
8	S150 0405	4			SCREW
9					ROD, R/Control
	5500 1958-9	1			Four Door and Truck
	5500 1952-3	1			Two Door
10	J372 1174	AR			SLEEVE
11	5505 2523	2			SILENCER
12					ROD, Locking
	5500 1962-3	1			Four Door and Truck
	5500 1956-7	1			Two Door
13-14	J400 4532-3	2			CLIP, w/Bushing
15	3420 1197	4			RIVET
16	5500 2083	4			RETAINER
17	5500 1966-7	1			ROD, R/Control
18	5500 1970-1	1			ROD, Locking

MODEL CODES

16=Cherokee 2 Dr.(1981-83)
17=Cherokee 2 Dr.(1981-83)
73=Cherokee 2WD-2 Dr.(1984-86)
74=Cherokee 2WD-4 Dr.(1984-86)
18=Cherokee 4 Dr.(1981-83)
77=Cherokee 4WD-2 Dr.(1984-86)
78=Cherokee 4WD-4 Dr.(1984-86)
85=CJ-5 (1981-83)
86=CJ-6(1981)
87=CJ-7(1981-86)
88=CJ-8, Scrambler(1981-86)
64=Comanche 2WD-6 Ft. Box(1986)
66=Comanche 2WD-7 Ft. Box(1986)
63=Comanche 4WD-6 Ft. Box(1986)
65=Comanche 4WD-7 Ft. Box(1986)
15=Grand Wagoneer 4 Dr.(1984-86)
25=J-10 Truck 7 Ft. Box(1981-84)
26=J10 Truck 8 Ft. Box(1981-86)
27=J-20 Truck 8 Ft. Box(1981-86)
15=Wagoneer 4 Dr.(1981-83)
75=Wagoneer 4WD-4 Dr.(1984-86)

BODY
CJ=CJ-5, CJ-6, CJ-7, CJ-8, Scrambler(1981-86)
MJ=Comanche Pickup(1986)

STYLES
SJ=Wagoneer(1981-83), Grand Wagoneer(1984-86), Cherokee(1981-83), J-10, J-20(1981-86)
XJ=Wagoneer(1984-86), Cherokee(1984-86)

AR = Use as Required - = Non Illustrated Part P.A.R. = Paint as Required

« RETURN TO GROUP INDEX

GLASS, DOOR FRONT AND REAR XJ CHEROKEE, XJ WAGONEER, COMANCHE
Figure 23C-1900

81J71 1900

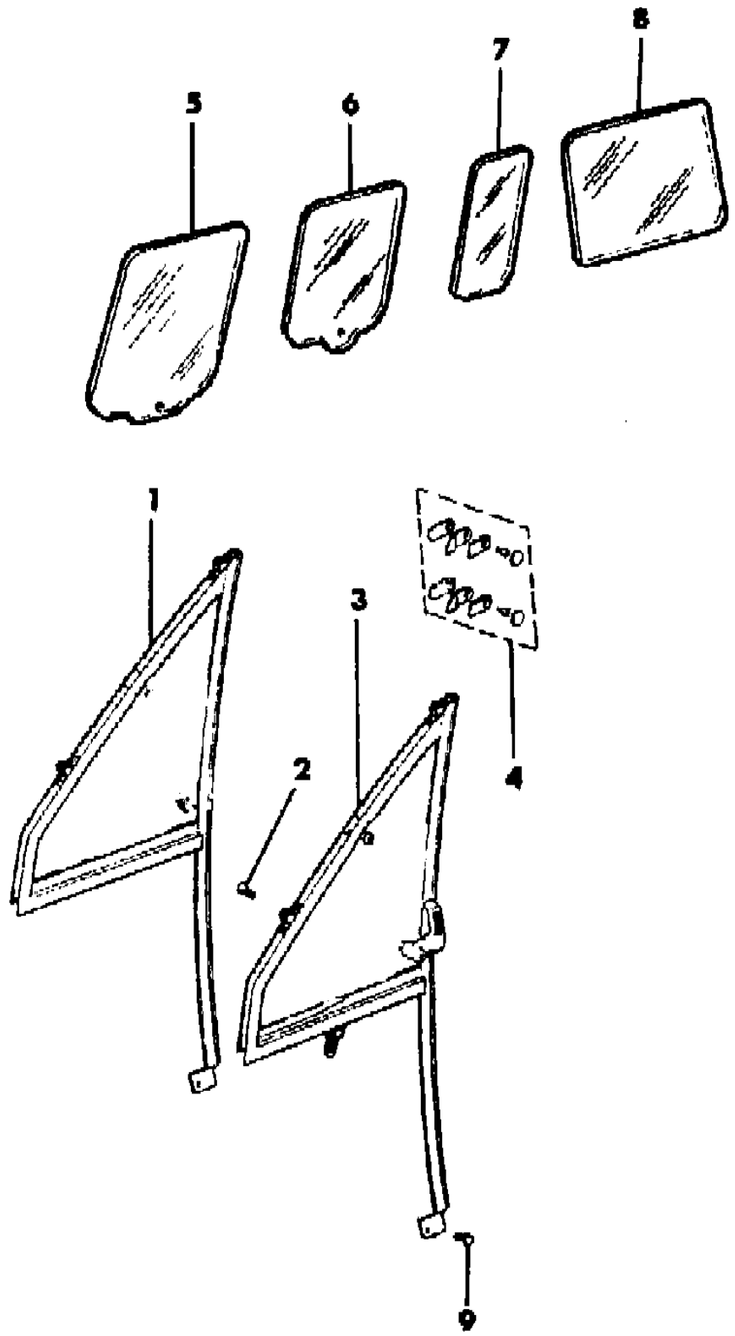

ITEM	PART NUMBER	QTY	BODY	MODEL	DESCRIPTION
1					VENT, Fixed
	5500 2344-5	1			Clear
	5500 2346-7	1			Tinted
2	3420 2035	4			SCREW
3					VENT, Pivoting
	5500 2338-9	1			Clear
	5500 2340-1	1			Tinted
4	8350 2274-5	1			PACKAGE, Hinge
5					GLASS, Front Door
	5500 0574-5	1			Clear, Four Door and Truck
	5500 0576-7	1			Tinted, Four Door and Truck
	5500 0578-9	1			Clear, Two Door
	5500 0580-1	1			Tinted, Two Door
6					GLASS, Rear Door
	5500 0588-9	1			Clear
	5500 0590-1	1			Tinted
	5501 8650-1	1			Bronze
7					GLASS, Rear Door Fixed
	5500 0618	1			Clear
	5500 0620-1	1			Tinted
	5501 8652-3	1			Bronze
8					GLASS, Quarter, See 23A
9	3420 1301	2			SCREW

MODEL CODES

16=Cherokee 2 Dr.(1981-83)	78=Cherokee 4WD-4 Dr.(1984-86)	64=Comanche 2WD-6 Ft. Box(1986)	25=J-10 Truck 7 Ft. Box(1981-84)
17=Cherokee 2 Dr.(1981-83)	85=CJ-5 (1981-83)	66=Comanche 2WD-7 Ft. Box(1986)	26=J10 Truck 8 Ft. Box(1981-86)
73=Cherokee 2WD-2 Dr.(1984-86)	86=CJ-6(1981)	63=Comanche 4WD-6 Ft. Box(1986)	27=J-20 Truck 8 Ft. Box(1981-86)
74=Cherokee 2WD-4 Dr.(1984-86)	87=CJ-7(1981-86)	65=Comanche 4WD-7 Ft. Box(1986)	15=Wagoneer 4 Dr.(1981-83)
18=Cherokee 4 Dr.(1981-83)	88=CJ-8, Scrambler(1981-86)	15=Grand Wagoneer 4 Dr.(1984-86)	75=Wagoneer 4WD-4 Dr.(1984-86)
77=Cherokee 4WD-2 Dr.(1984-86)			

BODY
CJ=CJ-5, CJ-6, CJ-7, CJ-8, Scrambler(1981-86)
MJ=Comanche Pickup(1986)

STYLES
SJ=Wagoneer(1981-83), Grand Wagoneer(1984-86), Cherokee(1981-83), J-10, J-20(1981-86)
XJ=Wagoneer(1984-86), Cherokee(1984-86)

AR = Use as Required - = Non Illustrated Part P.A.R. = Paint as Required

« RETURN TO GROUP INDEX

REGULATORS, DOOR GLASS MANUAL XJ CHEROKEE, XJ WAGONEER, COMANCHE
Figure 23C-2000

81J71 2000

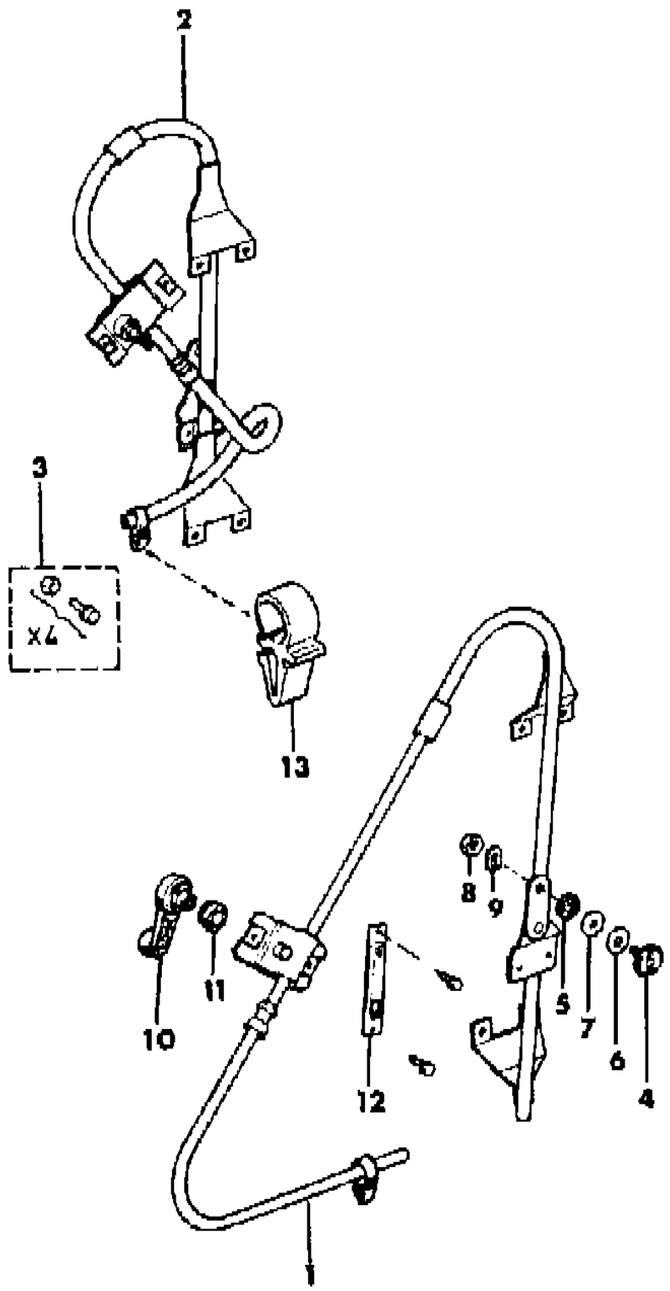

ITEM	PART NUMBER	QTY	BODY	MODEL	DESCRIPTION
1	5500 0586-7	1			REGULATOR, Front Door
2	5500 0594-5	1			REGULATOR, Rear Door
3	J813 0358	AR			PACKAGE, Fastener
4	5500 2432	AR			BOLT
5	5500 2433	AR			NUT
6		AR			BUSHING
7	J363 2958	AR			WASHER
8	3420 1514	AR			NUT
9	J400 4616	AR			WASHER
10					HANDLE, Regulator
	3500 8134	AR			Black
	3500 7083	AR			Med. Blue
	5500 2381	AR			Slate Blue
	3501 5484	AR			Cordovan
	3500 0570	AR			Garnet
	3500 4316	AR			Honey
	3501 1062	AR			Tan
	3500 0571	AR			Nutmeg
11	3500 0573	AR			SPACER
12	5500 5444	2			STRAP, Support
13	5500 9757	4			CLIP

MODEL CODES

16=Cherokee 2 Dr.(1981-83)
17=Cherokee 2 Dr.(1981-83)
73=Cherokee 2WD-2 Dr.(1984-86)
74=Cherokee 2WD-4 Dr.(1984-86)
18=Cherokee 4 Dr.(1981-83)
77=Cherokee 4WD-2 Dr.(1984-86)
78=Cherokee 4WD-4 Dr.(1984-86)
85=CJ-5 (1981-83)
86=CJ-6(1981)
87=CJ-7(1981-86)
88=CJ-8, Scrambler(1981-86)
64=Comanche 2WD-6 Ft. Box(1986)
66=Comanche 2WD-7 Ft. Box(1986)
63=Comanche 4WD-6 Ft. Box(1986)
65=Comanche 4WD-7 Ft. Box(1986)
15=Grand Wagoneer 4 Dr.(1984-86)
25=J-10 Truck 7 Ft. Box(1981-84)
26=J10 Truck 8 Ft. Box(1981-86)
27=J-20 Truck 8 Ft. Box(1981-86)
15=Wagoneer 4 Dr.(1981-83)
75=Wagoneer 4WD-4 Dr.(1984-86)

BODY

CJ=CJ-5, CJ-6, CJ-7, CJ-8, Scrambler(1981-86)
MJ=Comanche Pickup(1986)

STYLES

SJ=Wagoneer(1981-83), Grand Wagoneer(1984-86), Cherokee(1981-83), J-10, J-20(1981-86)
XJ=Wagoneer(1984-86), Cherokee(1984-86)

AR = Use as Required - = Non Illustrated Part P.A.R. = Paint as Required

« RETURN TO GROUP INDEX

REGULATORS, DOOR GLASS ELECTRIC XJ CHEROKEE, XJ WAGONEER, COMANCHE
Figure 23C-2100

81J71 2100

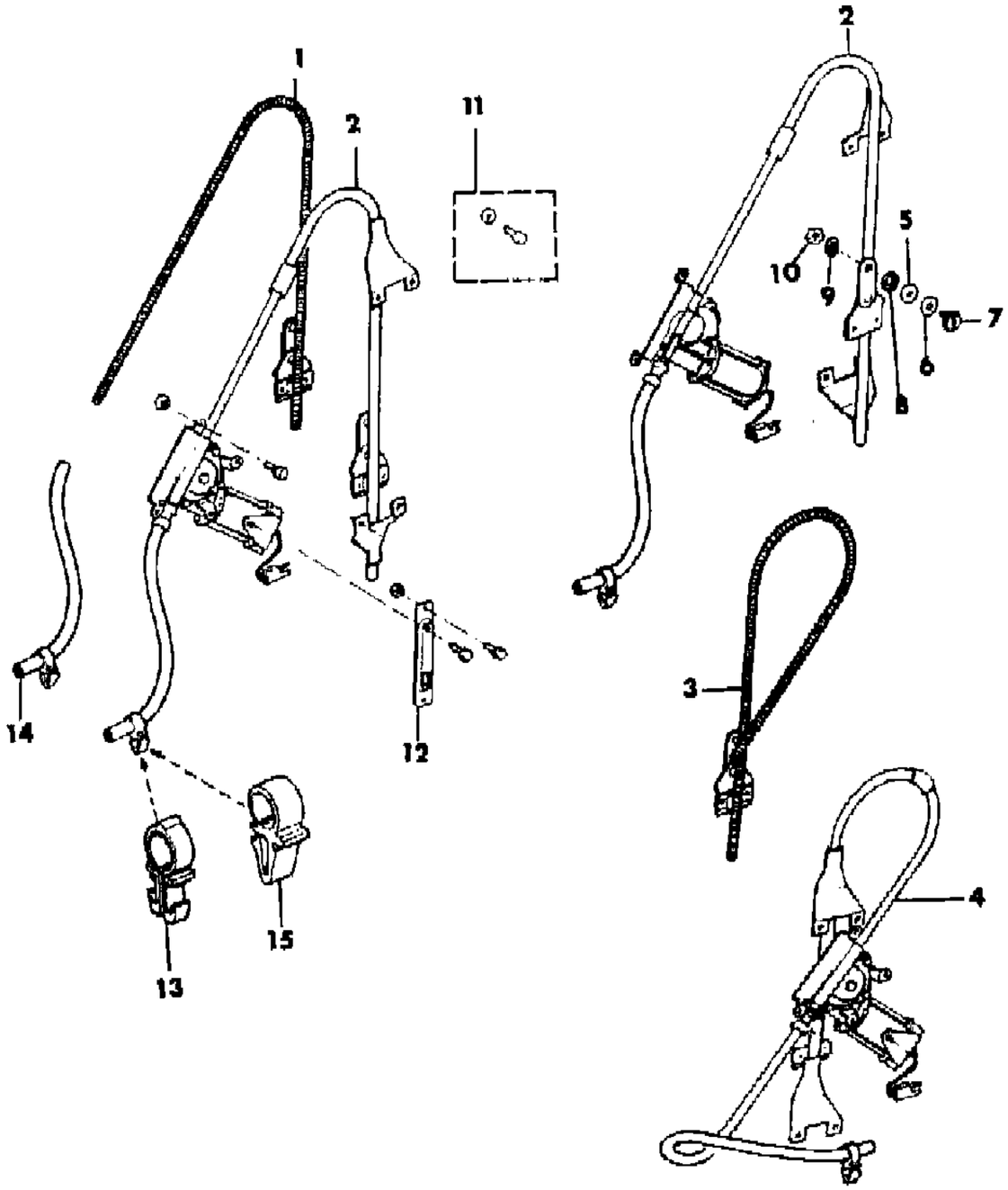

ITEM	PART NUMBER	QTY	BODY	MODEL	DESCRIPTION
1	8350 2178	2			CABLE, Drive
2	5500 0660-1	1			REGULATOR, Front Door
3	8350 2179	2			CABLE, Drive
4	5500 0558-9	1			REGULATOR, Rear Door
5	J363 2958	AR			WASHER
6	5500 2434	AR			BUSHING
7	5500 2432	AR			BOLT
8	5500 2433	AR			NUT
9	J400 4616	AR			WASHER
10	3420 1514	AR			NUT
11	J813 0358	AR			PACKAGE, Fastener
12	5500 5444	2			STRAP, Support
13	J400 5701	4			CLIP
14	8350 2180	4			HOSE
15	5500 9757	4			CLIP

MODEL CODES

16=Cherokee 2 Dr.(1981-83)
17=Cherokee 2 Dr.(1981-83)
73=Cherokee 2WD-2 Dr.(1984-86)
74=Cherokee 2WD-4 Dr.(1984-86)
18=Cherokee 4 Dr.(1981-83)
77=Cherokee 4WD-2 Dr.(1984-86)
78=Cherokee 4WD-4 Dr.(1984-86)
85=CJ-5 (1981-83)
86=CJ-6(1981)
87=CJ-7(1981-86)
88=CJ-8, Scrambler(1981-86)
64=Comanche 2WD-6 Ft. Box(1986)
66=Comanche 2WD-7 Ft. Box(1986)
63=Comanche 4WD-6 Ft. Box(1986)
65=Comanche 4WD-7 Ft. Box(1986)
15=Grand Wagoneer 4 Dr.(1984-86)
25=J-10 Truck 7 Ft. Box(1981-84)
26=J10 Truck 8 Ft. Box(1981-86)
27=J-20 Truck 8 Ft. Box(1981-86)
15=Wagoneer 4 Dr.(1981-83)
75=Wagoneer 4WD-4 Dr.(1984-86)

BODY
CJ=CJ-5, CJ-6, CJ-7, CJ-8, Scrambler(1981-86)
MJ=Comanche Pickup(1986)

STYLES
SJ=Wagoneer(1981-83), Grand Wagoneer(1984-86), Cherokee(1981-83), J-10, J-20(1981-86)
XJ=Wagoneer(1984-86), Cherokee(1984-86)

AR = Use as Required - = Non Illustrated Part P.A.R. = Paint as Required

« RETURN TO GROUP INDEX

WEATHERSTRIPS, DOOR FRONT AND REAR XJ CHEROKEE, XJ WAGONEER, COMANCHE
Figure 23C-2200

81J71 2200

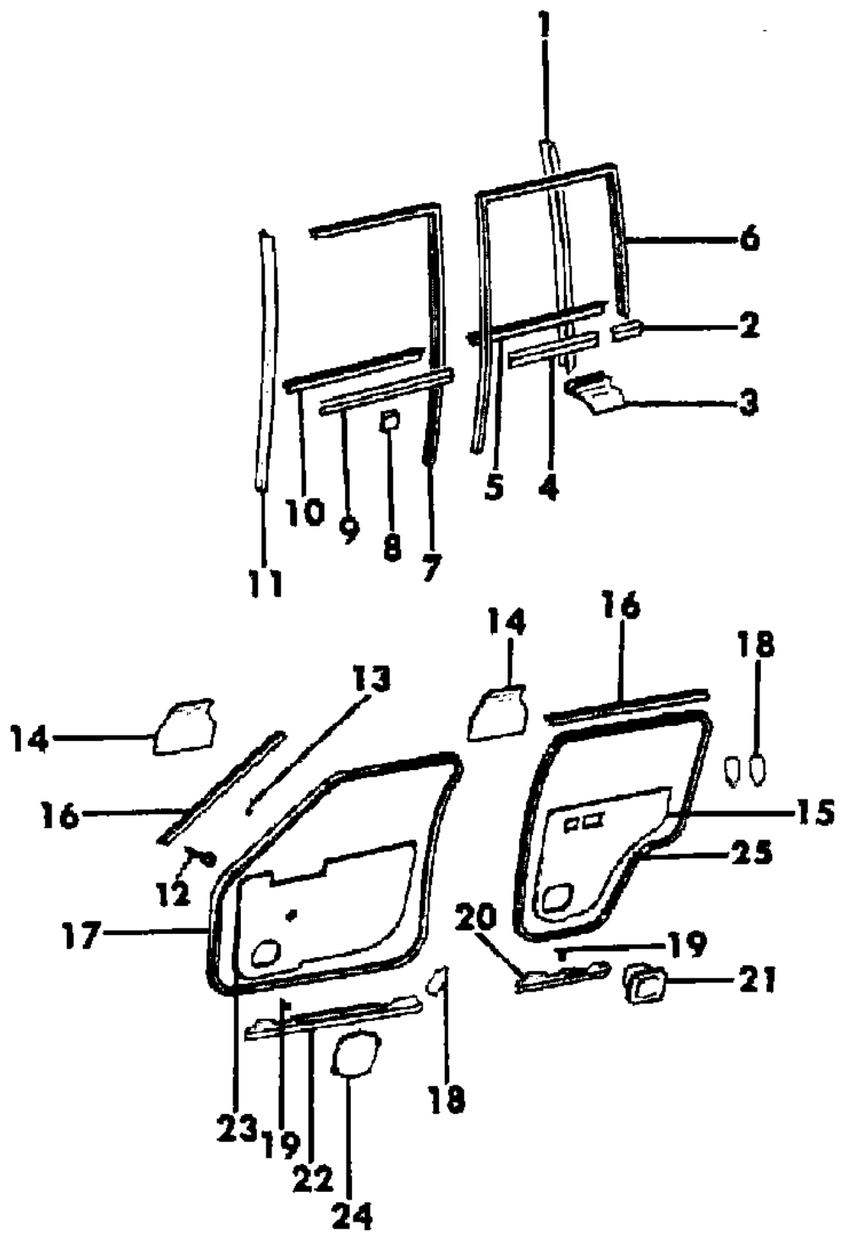

ITEM	PART NUMBER	QTY	BODY	MODEL	DESCRIPTION
1	5500 5666	2			WEATHERSTRIP, Glass Run
2	5500 5377	2			WEATHERSTRIP, Outer
3	5500 6513	2			DEFLECTOR, Water
4	5500 5304	2			WEATHERSTRIP, Outer
5	5500 5532-3	1			WEATHERSTRIP, Inner
6	5500 5316-7	1			CHANNEL, Glass Run
7					CHANNEL, Glass Run
	5500 5314-5	1			Four Door and Truck
	5500 5318-9	1			Two Door
8	5500 5383	AR			CLIP
9					WEATHERSTRIP, Outer
	5500 5302-3	1			Four Door and Truck
	5500 5306-7	1			Two Door
10					WEATHERSTRIP, Inner
	5500 5528	1			Four Door and Truck
	5500 5530-1	1			Two Door
11	5500 2337	2			WEATHERSTRIP, Glass Run
12	3420 2035	2			SCREW
13	3420 1956	AR			RIVET
14	5500 5060	4			SHIELD, Switch
15	5500 3626-7	1			WATERDAM, Door ***
16	5500 5012-3	1			SEAL, Secondary
17					SEAL, Door
	5500 4968	2			Four Door and Truck
	5500 4970	2			Two Door
18	5500 6632	6			WATERDAM, Hole Cover ***
19	3420 1495	AR			RIVET
20	5500 7014-5	1			SEAL, Door
21	5500 5178	2			POCKET, Ash Tray
22					SEAL, Door
	5500 7010-1	1			Four Door and Truck
	5500 7006-7	1			Two Door
23					WATERDAM, Door ***
	5500 3624-5	1			Four Door and Truck
	5500 3622-3	1			Two Door
24	5500 3628	2			WATERDAM, Speaker ***
25	5500 4969	2			SEAL, Door

MODEL CODES

16=Cherokee 2 Dr.(1981-83)
17=Cherokee 2 Dr.(1981-83)
73=Cherokee 2WD-2 Dr.(1984-86)
74=Cherokee 2WD-4 Dr.(1984-86)
18=Cherokee 4 Dr.(1981-83)
77=Cherokee 4WD-2 Dr.(1984-86)
78=Cherokee 4WD-4 Dr.(1984-86)
85=CJ-5 (1981-83)
86=CJ-6(1981)
87=CJ-7(1981-86)
88=CJ-8, Scrambler(1981-86)
64=Comanche 2WD-6 Ft. Box(1986)
66=Comanche 2WD-7 Ft. Box(1986)
63=Comanche 4WD-6 Ft. Box(1986)
65=Comanche 4WD-7 Ft. Box(1986)
15=Grand Wagoneer 4 Dr.(1984-86)
25=J-10 Truck 7 Ft. Box(1981-84)
26=J10 Truck 8 Ft. Box(1981-86)
27=J-20 Truck 8 Ft. Box(1981-86)
15=Wagoneer 4 Dr.(1981-83)
75=Wagoneer 4WD-4 Dr.(1984-86)

BODY
CJ=CJ-5, CJ-6, CJ-7, CJ-8, Scrambler(1981-86)
MJ=Comanche Pickup(1986)

STYLES
SJ=Wagoneer(1981-83), Grand Wagoneer(1984-86), Cherokee(1981-83), J-10, J-20(1981-86)
XJ=Wagoneer(1984-86), Cherokee(1984-86)

AR = Use as Required - = Non Illustrated Part P.A.R. = Paint as Required

« RETURN TO GROUP INDEX

81J71 2300

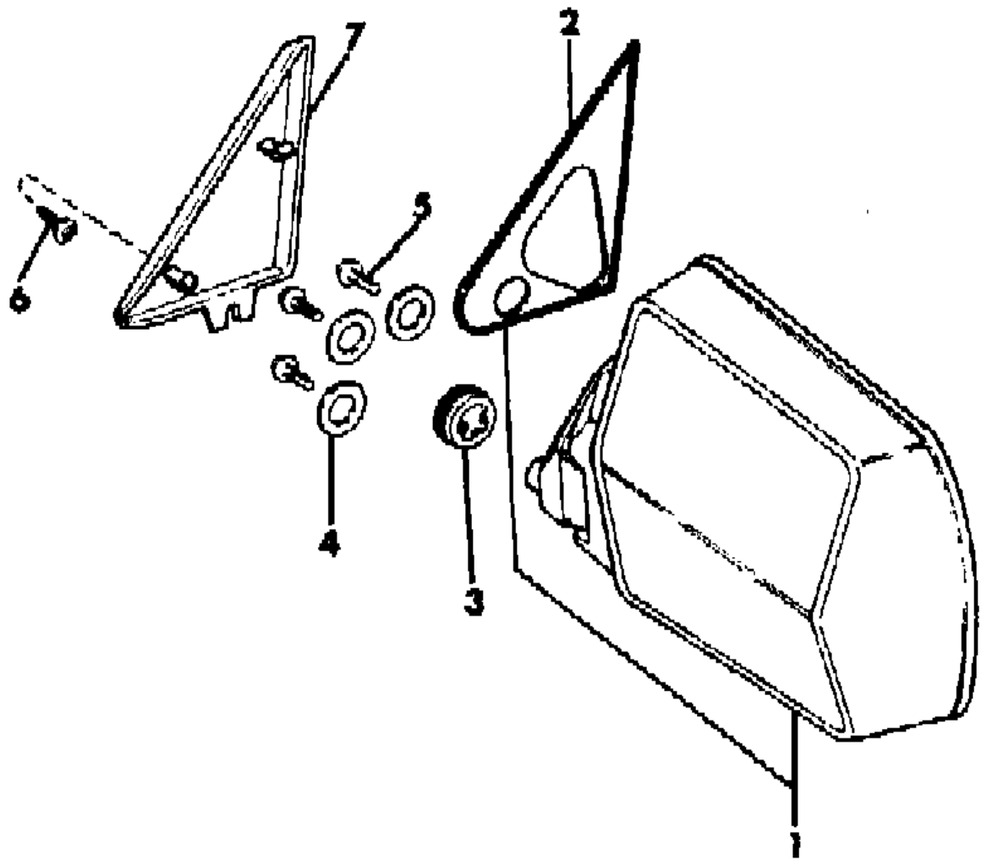

ITEM	PART NUMBER	QTY	BODY	MODEL	DESCRIPTION
1					MIRROR
	5503 4131	1			Black, Left
	8220 0314	1			Black, Right
	5500 2891	2			Bright
	8220 0314	2			Black, Truck
	8220 0315	2			Bright, Truck
2	5500 5430-1	1			GASKET
3	5500 6488	2			GROMMET
4	5500 5025	6			O-RING
5	3420 2005	6			SCREW
6	3420 1314	2			SCREW
7	5500 4954-5	1			COVER, Mirror

MODEL CODES
16=Cherokee 2 Dr.(1981-83)
17=Cherokee 2 Dr.(1981-83)
73=Cherokee 2WD-2 Dr.(1984-86)
74=Cherokee 2WD-4 Dr.(1984-86)
18=Cherokee 4 Dr.(1981-83)
77=Cherokee 4WD-2 Dr.(1984-86)
78=Cherokee 4WD-4 Dr.(1984-86)
85=CJ-5 (1981-83)
86=CJ-6(1981)
87=CJ-7(1981-86)
88=CJ-8, Scrambler(1981-86)
64=Comanche 2WD-6 Ft. Box(1986)
66=Comanche 2WD-7 Ft. Box(1986)
63=Comanche 4WD-6 Ft. Box(1986)
65=Comanche 4WD-7 Ft. Box(1986)
15=Grand Wagoneer 4 Dr.(1984-86)
25=J-10 Truck 7 Ft. Box(1981-84)
26=J10 Truck 8 Ft. Box(1981-86)
27=J-20 Truck 8 Ft. Box(1981-86)
15=Wagoneer 4 Dr.(1981-83)
75=Wagoneer 4WD-4 Dr.(1984-86)

BODY
CJ=CJ-5, CJ-6, CJ-7, CJ-8, Scrambler(1981-86)
MJ=Comanche Pickup(1986)

STYLES
SJ=Wagoneer(1981-83), Grand Wagoneer(1984-86), Cherokee(1981-83), J-10, J-20(1981-86)
XJ=Wagoneer(1984-86), Cherokee(1984-86)

AR = Use as Required - = Non Illustrated Part P.A.R. = Paint as Required

MIRRORS, EXTERIOR LOW PROFILE XJ CHEROKEE, XJ WAGONEER, COMANCHE
Figure 23C-2400

81J71 2400

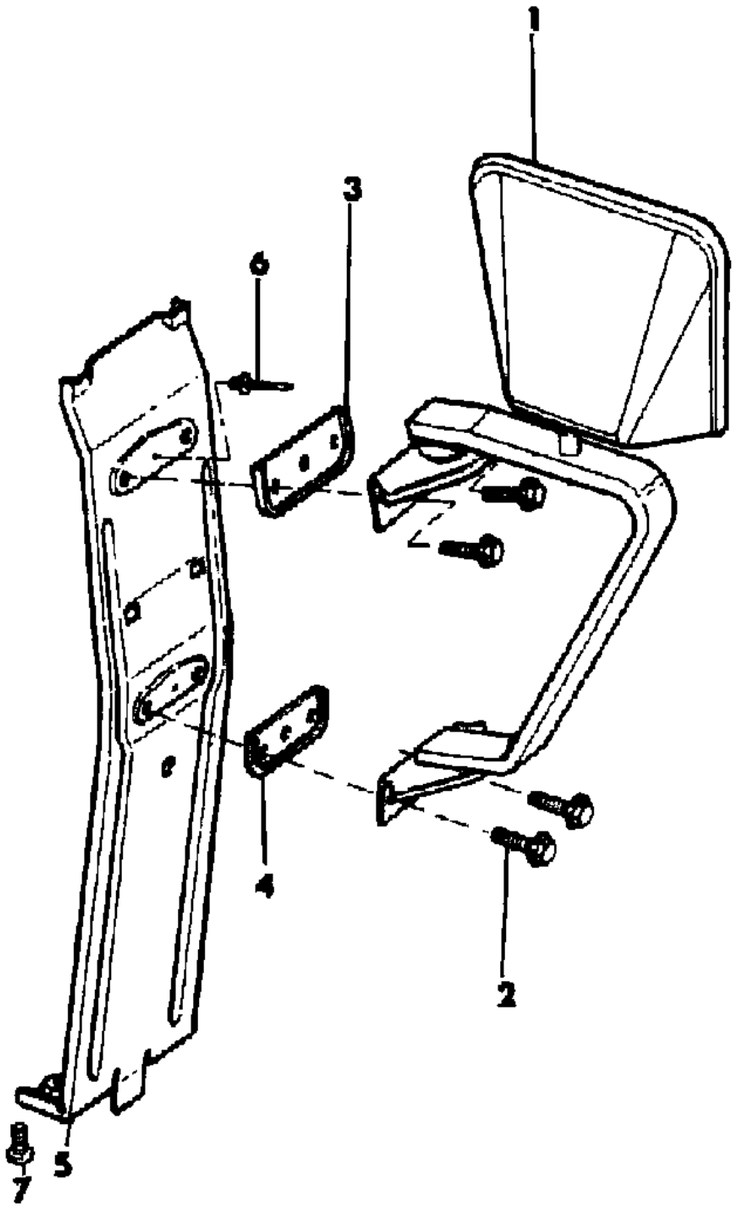

ITEM	PART NUMBER	QTY	BODY	MODEL	DESCRIPTION
1	5500 0534	2			MIRROR
2	3420 1604	8			BOLT
3	5500 1948	2			GASKET
4	5500 1949	2			GASKET
5	5500 4966	2			REINFORCEMENT
6	3420 1684	4			RIVET
7	3420 1808	4			SCREW

MODEL CODES

16=Cherokee 2 Dr.(1981-83)
17=Cherokee 2 Dr.(1981-83)
73=Cherokee 2WD-2 Dr.(1984-86)
74=Cherokee 2WD-4 Dr.(1984-86)
18=Cherokee 4 Dr.(1981-83)
77=Cherokee 4WD-2 Dr.(1984-86)
78=Cherokee 4WD-4 Dr.(1984-86)
85=CJ-5 (1981-83)
86=CJ-6(1981)
87=CJ-7(1981-86)
88=CJ-8, Scrambler(1981-86)
64=Comanche 2WD-6 Ft. Box(1986)
66=Comanche 2WD-7 Ft. Box(1986)
63=Comanche 4WD-6 Ft. Box(1986)
65=Comanche 4WD-7 Ft. Box(1986)
15=Grand Wagoneer 4 Dr.(1984-86)
25=J-10 Truck 7 Ft. Box(1981-84)
26=J10 Truck 8 Ft. Box(1981-86)
27=J-20 Truck 8 Ft. Box(1981-86)
15=Wagoneer 4 Dr.(1981-83)
75=Wagoneer 4WD-4 Dr.(1984-86)

BODY
CJ=CJ-5, CJ-6, CJ-7, CJ-8, Scrambler(1981-86)
MJ=Comanche Pickup(1986)

STYLES
SJ=Wagoneer(1981-83), Grand Wagoneer(1984-86), Cherokee(1981-83), J-10, J-20(1981-86)
XJ=Wagoneer(1984-86), Cherokee(1984-86)

AR = Use as Required - = Non Illustrated Part P.A.R. = Paint as Required

« RETURN TO GROUP INDEX

MIRRORS, EXTERIOR REMOTE CONTROL XJ CHEROKEE, XJ WAGONEER, COMANCHE
Figure 23C-2500

81J71 2500

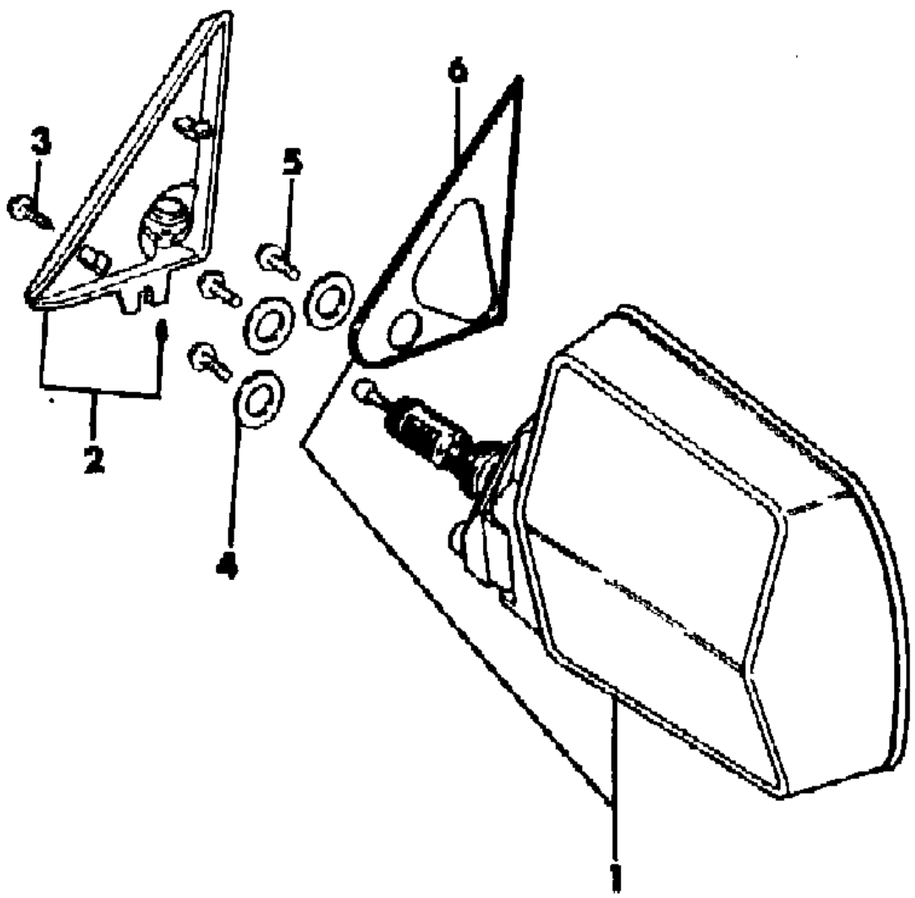

ITEM	PART NUMBER	QTY	BODY	MODEL	DESCRIPTION
1					MIRROR
	5500 0530-1	1			Black
	5500 1874-5	1			Bright
	5500 6994	1			Right, Economic Commission of Europe
	5500 6993	1			Left, Economic Commission of Europe
2	5500 4946-7	1			COVER, Mirror
3	3420 1314	2			SCREW
4	5500 5025	6			O-RING
5	3420 2005	6			SCREW
6	5500 5430-1	1			GASKET

MODEL CODES
16=Cherokee 2 Dr.(1981-83)
17=Cherokee 2 Dr.(1981-83)
73=Cherokee 2WD-2 Dr.(1984-86)
74=Cherokee 2WD-4 Dr.(1984-86)
18=Cherokee 4 Dr.(1981-83)
77=Cherokee 4WD-2 Dr.(1984-86)
78=Cherokee 4WD-4 Dr.(1984-86)
85=CJ-5 (1981-83)
86=CJ-6(1981)
87=CJ-7(1981-86)
88=CJ-8, Scrambler(1981-86)
64=Comanche 2WD-6 Ft. Box(1986)
66=Comanche 2WD-7 Ft. Box(1986)
63=Comanche 4WD-6 Ft. Box(1986)
65=Comanche 4WD-7 Ft. Box(1986)
15=Grand Wagoneer 4 Dr.(1984-86)
25=J-10 Truck 7 Ft. Box(1981-84)
26=J10 Truck 8 Ft. Box(1981-86)
27=J-20 Truck 8 Ft. Box(1981-86)
15=Wagoneer 4 Dr.(1981-83)
75=Wagoneer 4WD-4 Dr.(1984-86)

BODY
CJ=CJ-5, CJ-6, CJ-7, CJ-8, Scrambler(1981-86)
MJ=Comanche Pickup(1986)

STYLES
SJ=Wagoneer(1981-83), Grand Wagoneer(1984-86), Cherokee(1981-83), J-10, J-20(1981-86)
XJ=Wagoneer(1984-86), Cherokee(1984-86)

AR = Use as Required - = Non Illustrated Part P.A.R. = Paint as Required

« RETURN TO GROUP INDEX

MIRRORS, EXTERIOR ELECTRIC XJ CHEROKEE, XJ WAGONEER
Figure 23C-2600

81J71 2600

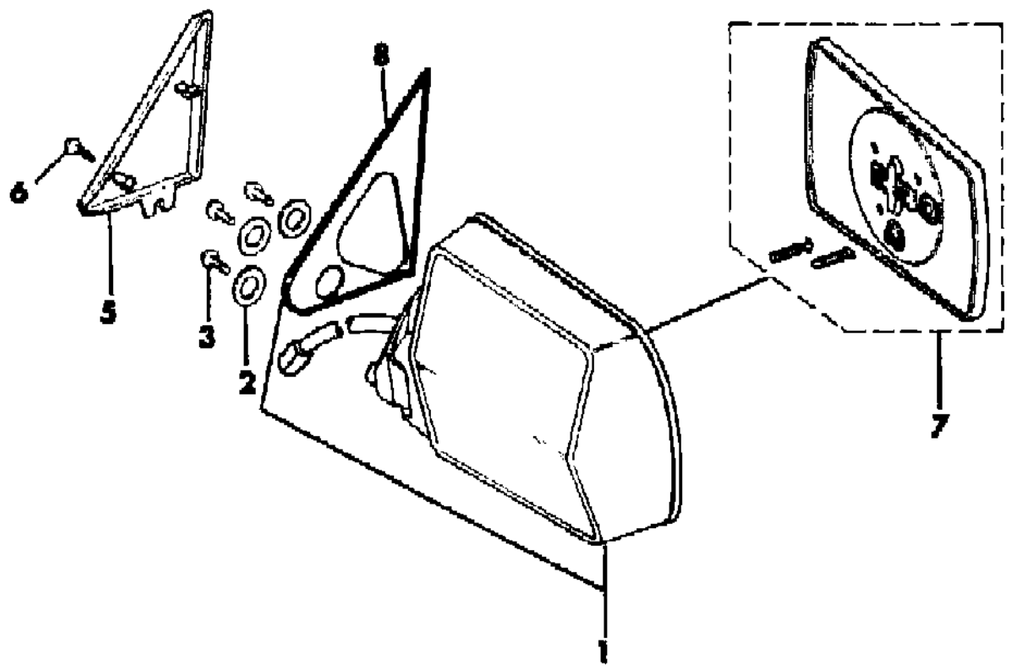

ITEM	PART NUMBER	QTY	BODY	MODEL	DESCRIPTION
1					MIRROR
	5500 0532-3	1			Black
	5500 1876-7	1			Bright
	5500 6997	1			Left, (Black) Economic Commission of Europe
	5500 6998	1			Right (Black) Economic Commission of Europe
	5500 6998-9	1			Bright, Economic Commission of Europe
	5500 6999	1			Left (Bright) Economic Commission of Europe
	5500 7000	1			Right (Bright) Economic Commission of Europe
2	5500 5025	6			O-RING
3	3420 2005	6			SCREW
4	5600 0911	1			SWITCH, Mirror
5	5500 4954-5	1			COVER, Mirror
6	3420 1314	2			SCREW
7					GLASS, Replacement
	8350 3627	1			Left
	8350 3628	1			Right
8	5500 5430-1	1			GASKET

MODEL CODES

16=Cherokee 2 Dr.(1981-83)	78=Cherokee 4WD-4 Dr.(1984-86)	64=Comanche 2WD-6 Ft. Box(1986)	25=J-10 Truck 7 Ft. Box(1981-84)
17=Cherokee 2 Dr.(1981-83)	85=CJ-5 (1981-83)	66=Comanche 2WD-7 Ft. Box(1986)	26=J10 Truck 8 Ft. Box(1981-86)
73=Cherokee 2WD-2 Dr.(1984-86)	86=CJ-6(1981)	63=Comanche 4WD-6 Ft. Box(1986)	27=J-20 Truck 8 Ft. Box(1981-86)
74=Cherokee 2WD-4 Dr.(1984-86)	87=CJ-7(1981-86)	65=Comanche 4WD-7 Ft. Box(1986)	15=Wagoneer 4 Dr.(1981-83)
18=Cherokee 4 Dr.(1981-83)	88=CJ-8, Scrambler(1981-86)	15=Grand Wagoneer 4 Dr.(1984-86)	75=Wagoneer 4WD-4 Dr.(1984-86)
77=Cherokee 4WD-2 Dr.(1984-86)			

BODY
CJ=CJ-5, CJ-6, CJ-7, CJ-8, Scrambler(1981-86)
MJ=Comanche Pickup(1986)

STYLES
SJ=Wagoneer(1981-83), Grand Wagoneer(1984-86), Cherokee(1981-83), J-10, J-20(1981-86)
XJ=Wagoneer(1984-86), Cherokee(1984-86)

AR = Use as Required - = Non Illustrated Part P.A.R. = Paint as Required

« RETURN TO GROUP INDEX

DOORS, FRONT AND REAR SJ WAGONEER, SJ CHEROKEE, J10, J20
Figure 23C-2700

81J71 2700

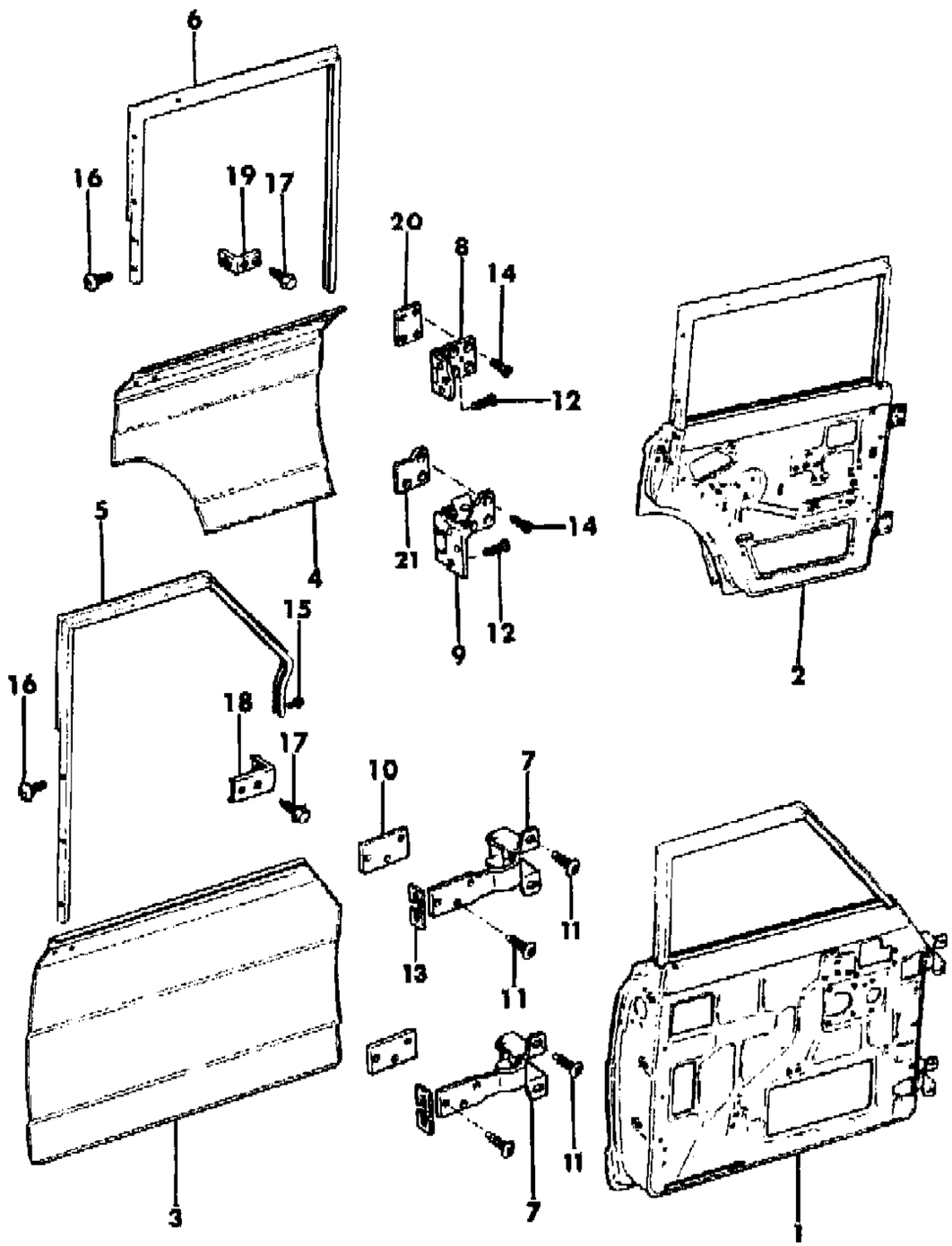

ITEM	PART NUMBER	QTY	BODY	MODEL	DESCRIPTION
1	J576 1250-1	1			SHELL, Front Door
2	J576 1254-5	1			SHELL, Rear Door
3					PANEL, Front Repair
	J575 0387	1			Left
	J575 0388	1			Right
4					PANEL, Rear Repair
	J095 7361	1			Left
	J095 7362	1			Right
5	J575 8502-3	1			FRAME, Front Door
6	J575 8496-7	1			FRAME, Rear Door
7	J575 8134-5	2			HINGE, Front Door
8					HINGE, Rear Door Upper
	J545 5207	1			Left
	J545 5208	1			Right
9					HINGE, Rear Door Lower
	J545 5205	1			Left
	J545 5206	1			Right
10	J095 2621	4			PLATE, Tapping
11	J400 6194	12			SCREW
12	J400 7003	12			SCREW
13	J545 5354	4			SEAL, Hinge
14	J400 5831	14			SCREW
15	J400 3069	2			SCREW
16	J097 9925	14			SCREW
17	J400 4801	8			BOLT
18	J095 7719	2			BRACKET, Division Bar Mtg.
19	J095 7757	2			BRACKET, Division Bar Mtg.
20	J095 8699	2			SHIM, Hinge
21	J095 8682	2			SHIM, Hinge

MODEL CODES

16=Cherokee 2 Dr.(1981-83)
17=Cherokee 2 Dr.(1981-83)
73=Cherokee 2WD-2 Dr.(1984-86)
74=Cherokee 2WD-4 Dr.(1984-86)
18=Cherokee 4 Dr.(1981-83)
77=Cherokee 4WD-2 Dr.(1984-86)
78=Cherokee 4WD-4 Dr.(1984-86)
85=CJ-5 (1981-83)
86=CJ-6(1981)
87=CJ-7(1981-86)
88=CJ-8, Scrambler(1981-86)
64=Comanche 2WD-6 Ft. Box(1986)
66=Comanche 2WD-7 Ft. Box(1986)
63=Comanche 4WD-6 Ft. Box(1986)
65=Comanche 4WD-7 Ft. Box(1986)
15=Grand Wagoneer 4 Dr.(1984-86)
25=J-10 Truck 7 Ft. Box(1981-84)
26=J10 Truck 8 Ft. Box(1981-86)
27=J-20 Truck 8 Ft. Box(1981-86)
15=Wagoneer 4 Dr.(1981-83)
75=Wagoneer 4WD-4 Dr.(1984-86)

BODY
CJ=CJ-5, CJ-6, CJ-7, CJ-8, Scrambler(1981-86)
MJ=Comanche Pickup(1986)

STYLES
SJ=Wagoneer(1981-83), Grand Wagoneer(1984-86), Cherokee(1981-83), J-10, J-20(1981-86)
XJ=Wagoneer(1984-86), Cherokee(1984-86)

AR = Use as Required - = Non Illustrated Part P.A.R. = Paint as Required

« RETURN TO GROUP INDEX

DOOR, LATCHES AND RODS FRONT AND REAR SJ WAGONEER, SJ CHEROKEE, J10, J20
Figure 23C-2800

81J71 2800

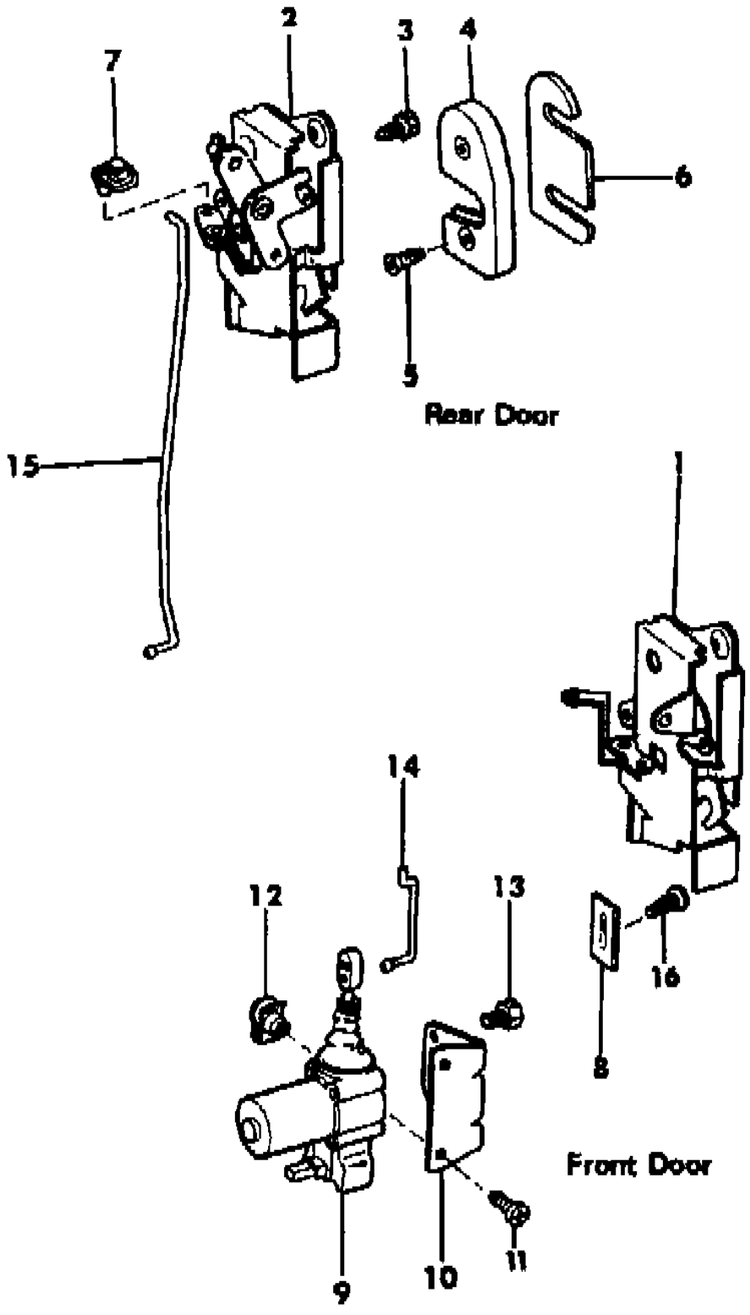

ITEM	PART NUMBER	QTY	BODY	MODEL	DESCRIPTION
1					LATCH, Front Door
	J575 0018	1			Right
	J575 0017	1			Left
2					LATCH, Rear Door
	J575 0020	1			Right
	J575 0019	1			Left
3	J400 7032	AR			SCREW
4					STRIKER, Front Door
	J575 0082	2			Right
	J575 0081	2			Left
5	J400 6434	AR			SCREW
6	J575 0093	AR			SHIM
7	J400 3672	2			RETAINER
8					SEAL, Dust
	J097 9385	AR			1981-84
	J576 6754	2			1985-86
	J545 6156	AR			Snap in
9	J813 4627	4			ACTUATOR, Door Lock
10	J813 4628	4			BRACKET, Actuator
11	J400 2203	AR			SCREW
12	J400 4201	AR			NUT
13	J813 4670	AR			SCREW
14	J575 1074	2			ROD, Front Door Actuator
15					ROD, Rear Door Actuator
	J575 2015	1			1981-83, Right
	J575 2016	1			1981-83, Left
	J576 4668-9	1			1983-86
16	J097 9226	AR			RIVET

MODEL CODES

16=Cherokee 2 Dr.(1981-83)	78=Cherokee 4WD-4 Dr.(1984-86)	64=Comanche 2WD-6 Ft. Box(1986)	25=J-10 Truck 7 Ft. Box(1981-84)
17=Cherokee 2 Dr.(1981-83)	85=CJ-5 (1981-83)	66=Comanche 2WD-7 Ft. Box(1986)	26=J10 Truck 8 Ft. Box(1981-86)
73=Cherokee 2WD-2 Dr.(1984-86)	86=CJ-6(1981)	63=Comanche 4WD-6 Ft. Box(1986)	27=J-20 Truck 8 Ft. Box(1981-86)
74=Cherokee 2WD-4 Dr.(1984-86)	87=CJ-7(1981-86)	65=Comanche 4WD-7 Ft. Box(1986)	15=Wagoneer 4 Dr.(1981-83)
18=Cherokee 4 Dr.(1981-83)	88=CJ-8, Scrambler(1981-86)	15=Grand Wagoneer 4 Dr.(1984-86)	75=Wagoneer 4WD-4 Dr.(1984-86)
77=Cherokee 4WD-2 Dr.(1984-86)			

BODY
CJ=CJ-5, CJ-6, CJ-7, CJ-8, Scrambler(1981-86)
MJ=Comanche Pickup(1986)

STYLES
SJ=Wagoneer(1981-83), Grand Wagoneer(1984-86), Cherokee(1981-83), J-10, J-20(1981-86)
XJ=Wagoneer(1984-86), Cherokee(1984-86)

AR = Use as Required - = Non Illustrated Part P.A.R. = Paint as Required

« RETURN TO GROUP INDEX

DOOR, CONTROLS SJ WAGONEER, SJ CHEROKEE, J10, J20
Figure 23C-2900

81J71 2900

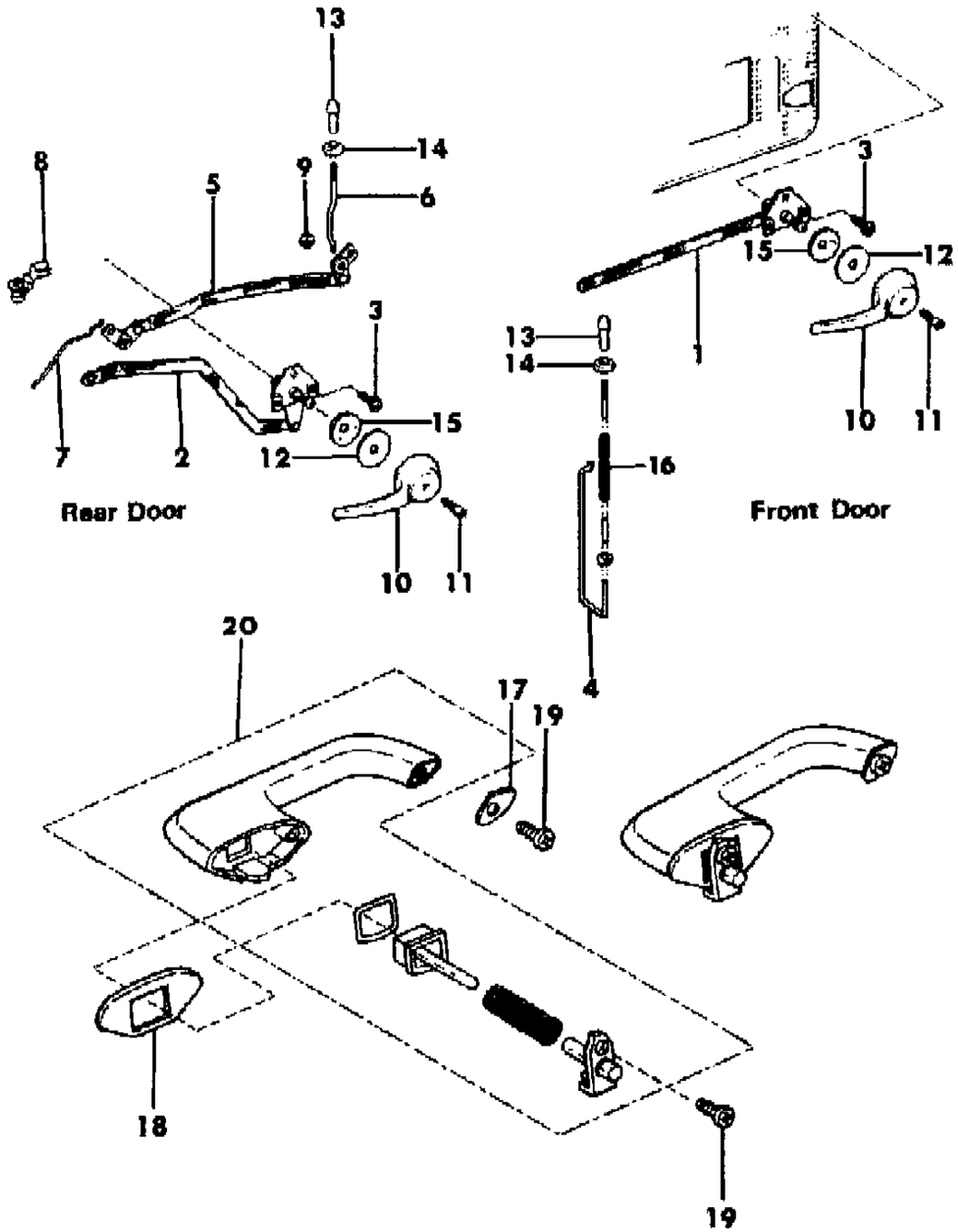

ITEM	PART NUMBER	QTY	BODY	MODEL	DESCRIPTION
1	J545 5998-9	1			CONTROL, Remote
2					CONTROL, Door Remote
	J545 5894	1			Right
	J545 5893	1			Left
3	J098 1780	12			SCREW
4					LEVER, Lock Rod
	J575 1980	1			Right
	J575 1979	1			Left
5					BELLCRANK, Locking
	J575 0398	1			Right, 1981-82
	J576 1990	1			Right, 1983-86
	J575 0397	1			Left, 1981-82
	J576 1991	1			Left, 1983-86
6					ROD, Locking
	J575 2018	1			Right
	J575 2017	1			Left
7	J575 1988	2			ROD, Lock Actuator
8	J400 4532	2			CLIP, w/Bushing
9	J027 1166	4			NUT
10	J545 5997	4			HANDLE, Remote
11	J097 3442	4			SCREW
12	J098 7527	4			WASHER
13	J098 9957	4			BUTTON, Lock
14	J097 2848	4			GROMMET, Button
15	J095 6346	4			ESCUTCHEON
16	J096 1848	2			INSULATION
17					GASKET, Front
	J096 0394	2			Right
	J096 0393	2			Left
18					GASKET, Rear
	J096 0388	2			Right
	J096 0387	2			Left
19	J098 1780	8			SCREW
20					HANDLE
	J095 6856	2			Right
	J095 6855	2			Left

MODEL CODES
16=Cherokee 2 Dr.(1981-83)
17=Cherokee 2 Dr.(1981-83)
73=Cherokee 2WD-2 Dr.(1984-86)
74=Cherokee 2WD-4 Dr.(1984-86)
18=Cherokee 4 Dr.(1981-83)
77=Cherokee 4WD-2 Dr.(1984-86)
78=Cherokee 4WD-4 Dr.(1984-86)
85=CJ-5 (1981-83)
86=CJ-6(1981)
87=CJ-7(1981-86)
88=CJ-8, Scrambler(1981-86)
64=Comanche 2WD-6 Ft. Box(1986)
66=Comanche 2WD-7 Ft. Box(1986)
63=Comanche 4WD-6 Ft. Box(1986)
65=Comanche 4WD-7 Ft. Box(1986)
15=Grand Wagoneer 4 Dr.(1984-86)
25=J-10 Truck 7 Ft. Box(1981-84)
26=J10 Truck 8 Ft. Box(1981-86)
27=J-20 Truck 8 Ft. Box(1981-86)
15=Wagoneer 4 Dr.(1981-83)
75=Wagoneer 4WD-4 Dr.(1984-86)

BODY
CJ=CJ-5, CJ-6, CJ-7, CJ-8, Scrambler(1981-86)
MJ=Comanche Pickup(1986)

STYLES
SJ=Wagoneer(1981-83), Grand Wagoneer(1984-86), Cherokee(1981-83), J-10, J-20(1981-86)
XJ=Wagoneer(1984-86), Cherokee(1984-86)

AR = Use as Required - = Non Illustrated Part P.A.R. = Paint as Required

« RETURN TO GROUP INDEX

DOOR, GLASS REGULATOR MANUAL SJ WAGONEER, SJ CHEROKEE, J10, J20
Figure 23C-3000

81J71 3000

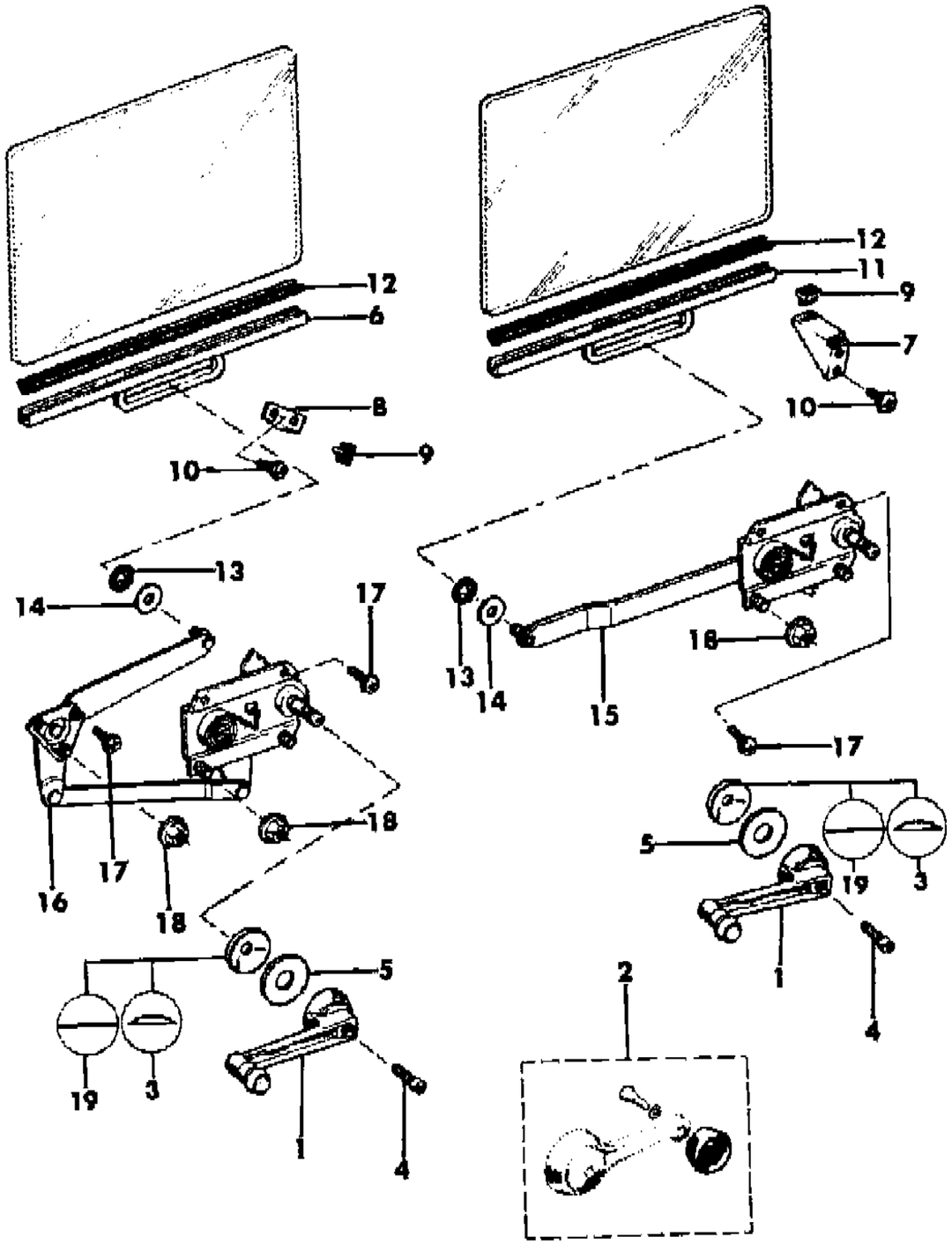

ITEM	PART NUMBER	QTY	BODY	MODEL	DESCRIPTION
1	J367 8907	4			HANDLE
2	J813 4422	AR			PACKAGE, Knob
3	J095 6346	4			ESCUTCHEON
4	J097 3442	4			SCREW
5	J361 3467	4			WASHER
6	J575 1070-1	1			CHANNEL, Glass
7	J095 7720	2			BRACKET, Glass Stop
8	J095 9614	2			BRACKET, Glass Stop
9	J095 7728	4			BUMPER, Stop
10	S045 4542	8			SCREW
11					CHANNEL, Glass
	J095 7854	1			Right
	J095 7853	1			Left
12	J546 9513	4			SEAL, Glass Lower
13	J098 0363	4			RETAINER
14	J400 2086	4			WASHER
15	J545 6004-5	1			REGULATOR
16	J545 6002-3	1			REGULATOR
17	J098 1780	AR			SCREW
18	J400 5699	AR			NUT
19	J098 7527	4			ESCUTCHEON

MODEL CODES

16=Cherokee 2 Dr.(1981-83)
17=Cherokee 2 Dr.(1981-83)
73=Cherokee 2WD-2 Dr.(1984-86)
74=Cherokee 2WD-4 Dr.(1984-86)
18=Cherokee 4 Dr.(1981-83)
77=Cherokee 4WD-2 Dr.(1984-86)
78=Cherokee 4WD-4 Dr.(1984-86)
85=CJ-5 (1981-83)
86=CJ-6(1981)
87=CJ-7(1981-86)
88=CJ-8, Scrambler(1981-86)
64=Comanche 2WD-6 Ft. Box(1986)
66=Comanche 2WD-7 Ft. Box(1986)
63=Comanche 4WD-6 Ft. Box(1986)
65=Comanche 4WD-7 Ft. Box(1986)
15=Grand Wagoneer 4 Dr.(1984-86)
25=J-10 Truck 7 Ft. Box(1981-84)
26=J10 Truck 8 Ft. Box(1981-86)
27=J-20 Truck 8 Ft. Box(1981-86)
15=Wagoneer 4 Dr.(1981-83)
75=Wagoneer 4WD-4 Dr.(1984-86)

BODY
CJ=CJ-5, CJ-6, CJ-7, CJ-8, Scrambler(1981-86)
MJ=Comanche Pickup(1986)

STYLES
SJ=Wagoneer(1981-83), Grand Wagoneer(1984-86), Cherokee(1981-83), J-10, J-20(1981-86)
XJ=Wagoneer(1984-86), Cherokee(1984-86)

AR = Use as Required - = Non Illustrated Part P.A.R. = Paint as Required

« RETURN TO GROUP INDEX

REGULATOR, DOOR GLASS ELECTRIC, TYPE 1, 1981-82 SJ WAGONEER, SJ CHEROKEE, J10, J20
Figure 23C-3100

81J71 3100

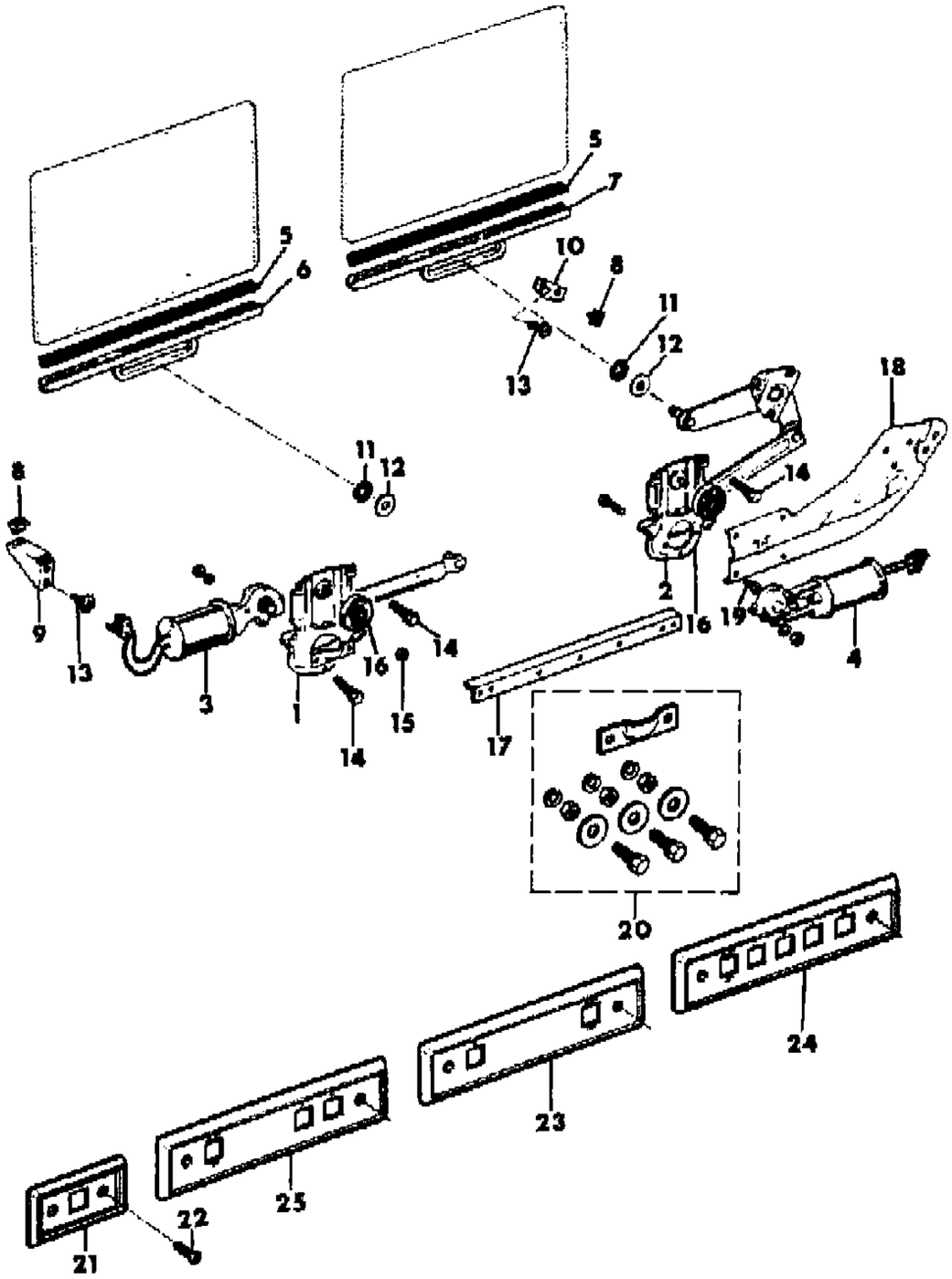

ITEM	PART NUMBER	QTY	BODY	MODEL	DESCRIPTION
1					REGULATOR, Front
	J813 2688	1			Right
	J813 2687	1			Left
2					REGULATOR, Rear
	J813 2690	1			Right
	J813 2689	1			Left
3					MOTOR, Front
	J813 2692	1			Right
	J813 2691	1			Left
4					MOTOR, Rear
	J813 3419	1			Left
5	J546 9513	4			SEAL, Glass Lower
6					CHANNEL, Glass, Front
	J095 7854	1			Right
	J095 7853	1			Left
7	J575 1070-1	1			CHANNEL, Glass, Rear
8	J095 7728	4			BUMPER, Stop
9	J095 7720	2			BRACKET, Glass Stop, Front
10	J095 9614	2			BRACKET, Glass Stop, Rear
11	J098 0363	4			RETAINER
12	J400 2086	4			WASHER
13	S045 4542	8			SCREW
14	J400 6604	AR			SCREW
15	J400 5699	AR			NUT
16	J813 3422	4			SPRING
17	J575 2267	2			REINFORCEMENT, Regulator, Front
18	J575 1898-9	1			REINFORCEMENT, Regulator, Rear
19	J400 5966	4			SCREW
20	J813 3421	AR			PACKAGE, Fastener
21					BEZEL, Switch
	J373 1897	2			Bright
	J373 1890	2			Woodgrain
22	J941 6327	AR			SCREW
23					BEZEL, Switch
	J575 1880	2			Bright
	J373 4398	2			Woodgrain
24					BEZEL, Switch
	J373 1900	1			Bright
	J373 1893	1			Woodgrain

MODEL CODES
16=Cherokee 2 Dr.(1981-83)
17=Cherokee 2 Dr.(1981-83)
73=Cherokee 2WD-2 Dr.(1984-86)
74=Cherokee 2WD-4 Dr.(1984-86)
18=Cherokee 4 Dr.(1981-83)
77=Cherokee 4WD-2 Dr.(1984-86)
78=Cherokee 4WD-4 Dr.(1984-86)
85=CJ-5 (1981-83)
86=CJ-6(1981)
87=CJ-7(1981-86)
88=CJ-8, Scrambler(1981-86)
64=Comanche 2WD-6 Ft. Box(1986)
66=Comanche 2WD-7 Ft. Box(1986)
63=Comanche 4WD-6 Ft. Box(1986)
65=Comanche 4WD-7 Ft. Box(1986)
15=Grand Wagoneer 4 Dr.(1984-86)
25=J-10 Truck 7 Ft. Box(1981-84)
26=J10 Truck 8 Ft. Box(1981-86)
27=J-20 Truck 8 Ft. Box(1981-86)
15=Wagoneer 4 Dr.(1981-83)
75=Wagoneer 4WD-4 Dr.(1984-86)

BODY
CJ=CJ-5, CJ-6, CJ-7, CJ-8, Scrambler(1981-86)
MJ=Comanche Pickup(1986)

STYLES
SJ=Wagoneer(1981-83), Grand Wagoneer(1984-86), Cherokee(1981-83), J-10, J-20(1981-86)
XJ=Wagoneer(1984-86), Cherokee(1984-86)

AR = Use as Required - = Non Illustrated Part P.A.R. = Paint as Required

81J71 3100

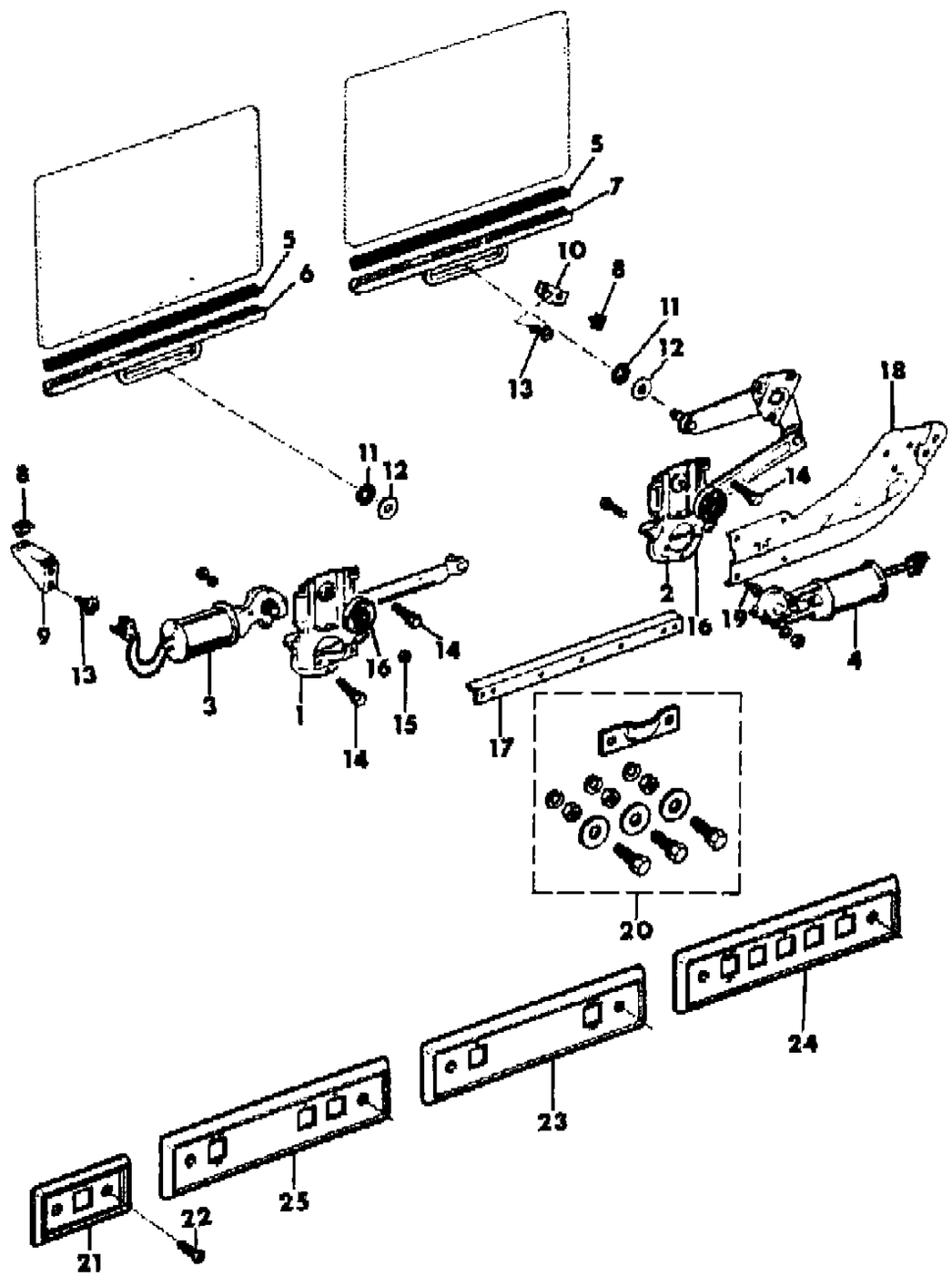

ITEM	PART NUMBER	QTY	BODY	MODEL	DESCRIPTION
25					BEZEL, Switch
	J575 1885	1			Bright
	J373 1894	1			Woodgrain

MODEL CODES
16=Cherokee 2 Dr.(1981-83)
17=Cherokee 2 Dr.(1981-83)
73=Cherokee 2WD-2 Dr.(1984-86)
74=Cherokee 2WD-4 Dr.(1984-86)
18=Cherokee 4 Dr.(1981-83)
77=Cherokee 4WD-2 Dr.(1984-86)
78=Cherokee 4WD-4 Dr.(1984-86)
85=CJ-5 (1981-83)
86=CJ-6(1981)
87=CJ-7(1981-86)
88=CJ-8, Scrambler(1981-86)
64=Comanche 2WD-6 Ft. Box(1986)
66=Comanche 2WD-7 Ft. Box(1986)
63=Comanche 4WD-6 Ft. Box(1986)
65=Comanche 4WD-7 Ft. Box(1986)
15=Grand Wagoneer 4 Dr.(1984-86)
25=J-10 Truck 7 Ft. Box(1981-84)
26=J10 Truck 8 Ft. Box(1981-86)
27=J-20 Truck 8 Ft. Box(1981-86)
15=Wagoneer 4 Dr.(1981-83)
75=Wagoneer 4WD-4 Dr.(1984-86)

BODY
CJ=CJ-5, CJ-6, CJ-7, CJ-8, Scrambler(1981-86)
MJ=Comanche Pickup(1986)

STYLES
SJ=Wagoneer(1981-83), Grand Wagoneer(1984-86), Cherokee(1981-83), J-10, J-20(1981-86)
XJ=Wagoneer(1984-86), Cherokee(1984-86)

AR = Use as Required - = Non Illustrated Part P.A.R. = Paint as Required

REGULATOR, DOOR GLASS ELECTRIC FLEXRACK, TYPE 2, 1982-85 SJ WAGONEER, SJ CHEROKEE, J10, J20
Figure 23C-3200

81J71 3200

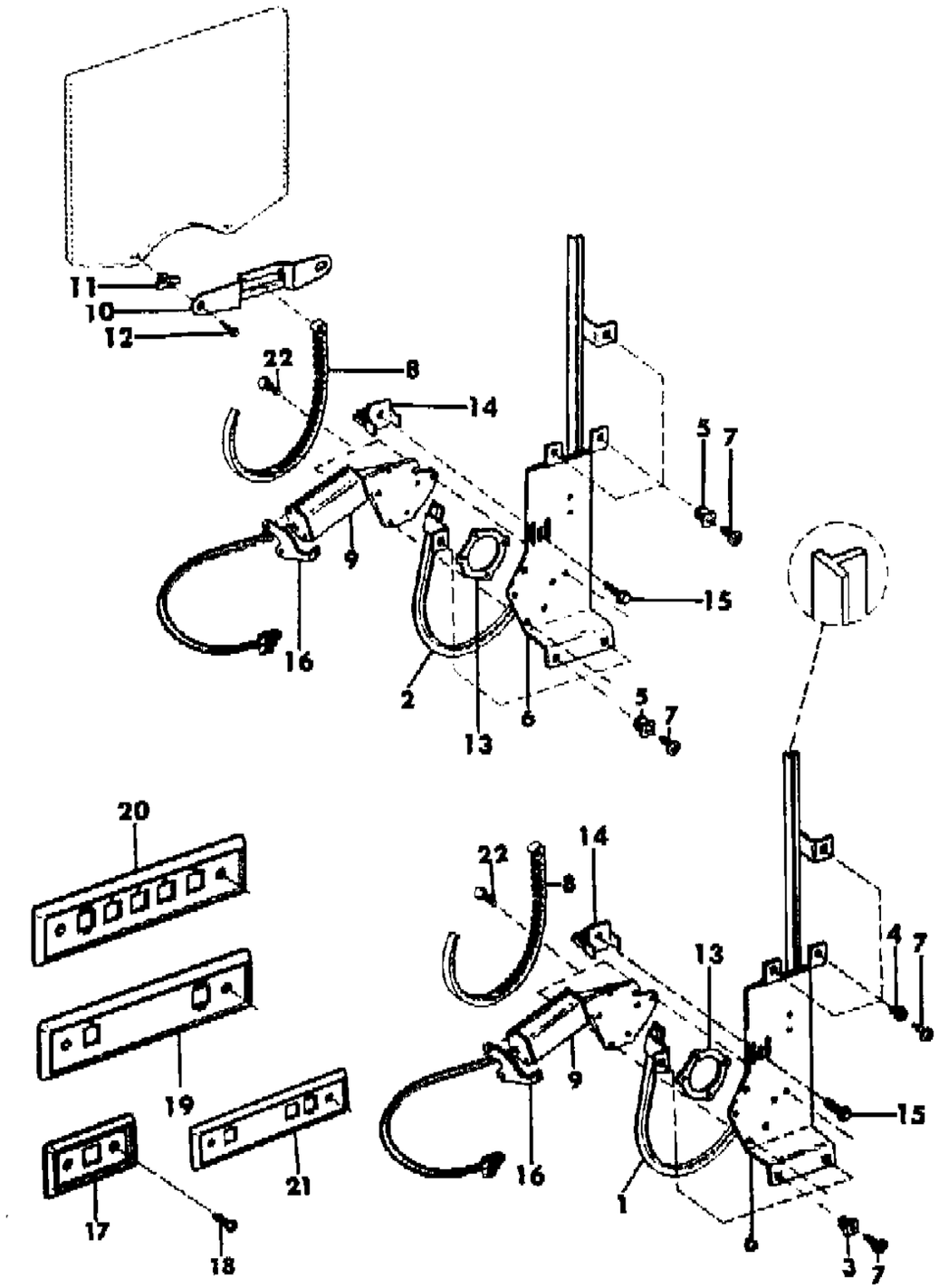

ITEM	PART NUMBER	QTY	BODY	MODEL	DESCRIPTION
1-2	J813 4242-3	2			REGULATOR
3	J400 7029	AR			NUT
4	J400 7030	AR			NUT
5	J400 0141	AR			NUT
6	J813 4774-5	1			PLATE, Mtg.
7	J400 5789	AR			SCREW
8					FLEXRACK ***
	J813 4246	2			Right
	J813 4773	2			Left
9	J813 4244-5	2			MOTOR, Regulator
10	J576 1101	4			BRACKET, Glass Lift
11	J400 3706	8			GROMMET
12	J400 0424	8			SCREW
13	J813 4854	4			GASKET
14	J813 4241	4			BRACKET, Glass Stop
15	J400 2203	4			SCREW
16					BRACKET, Support
	J813 4836	1			Right
	J813 4835	1			Left
17					BEZEL, Switch
	J373 1897	2			Bright
	J373 1890	2			Woodgrain
18	J941 6327	AR			SCREW
19					BEZEL, Switch
	J575 1880	2			Bright
	J373 4398	1			Woodgrain
20					BEZEL, Switch
	J373 1900	1			Bright
	J373 1893	1			Woodgrain
21					BEZEL, Switch
	J575 1885	1			Bright
	J373 1894	1			Woodgrain, 1982-83
22	J813 4240	8			SCREW

MODEL CODES

16=Cherokee 2 Dr.(1981-83)	78=Cherokee 4WD-4 Dr.(1984-86)	64=Comanche 2WD-6 Ft. Box(1986)	25=J-10 Truck 7 Ft. Box(1981-84)
17=Cherokee 2 Dr.(1981-83)	85=CJ-5 (1981-83)	66=Comanche 2WD-7 Ft. Box(1986)	26=J10 Truck 8 Ft. Box(1981-86)
73=Cherokee 2WD-2 Dr.(1984-86)	86=CJ-6(1981)	63=Comanche 4WD-6 Ft. Box(1986)	27=J-20 Truck 8 Ft. Box(1981-86)
74=Cherokee 2WD-4 Dr.(1984-86)	87=CJ-7(1981-86)	65=Comanche 4WD-7 Ft. Box(1986)	15=Wagoneer 4 Dr.(1981-83)
18=Cherokee 4 Dr.(1981-83)	88=CJ-8, Scrambler(1981-86)	15=Grand Wagoneer 4 Dr.(1984-86)	75=Wagoneer 4WD-4 Dr.(1984-86)
77=Cherokee 4WD-2 Dr.(1984-86)			

BODY
CJ=CJ-5, CJ-6, CJ-7, CJ-8, Scrambler(1981-86)
MJ=Comanche Pickup(1986)

STYLES
SJ=Wagoneer(1981-83), Grand Wagoneer(1984-86), Cherokee(1981-83), J-10, J-20(1981-86)
XJ=Wagoneer(1984-86), Cherokee(1984-86)

AR = Use as Required - = Non Illustrated Part P.A.R. = Paint as Required

« RETURN TO GROUP INDEX

REGULATOR, DOOR GLASS ELECTRIC FLEXRACK, TYPE THREE 1985-86 GRAND WAGONEER, J10, J20
Figure 23C-3300

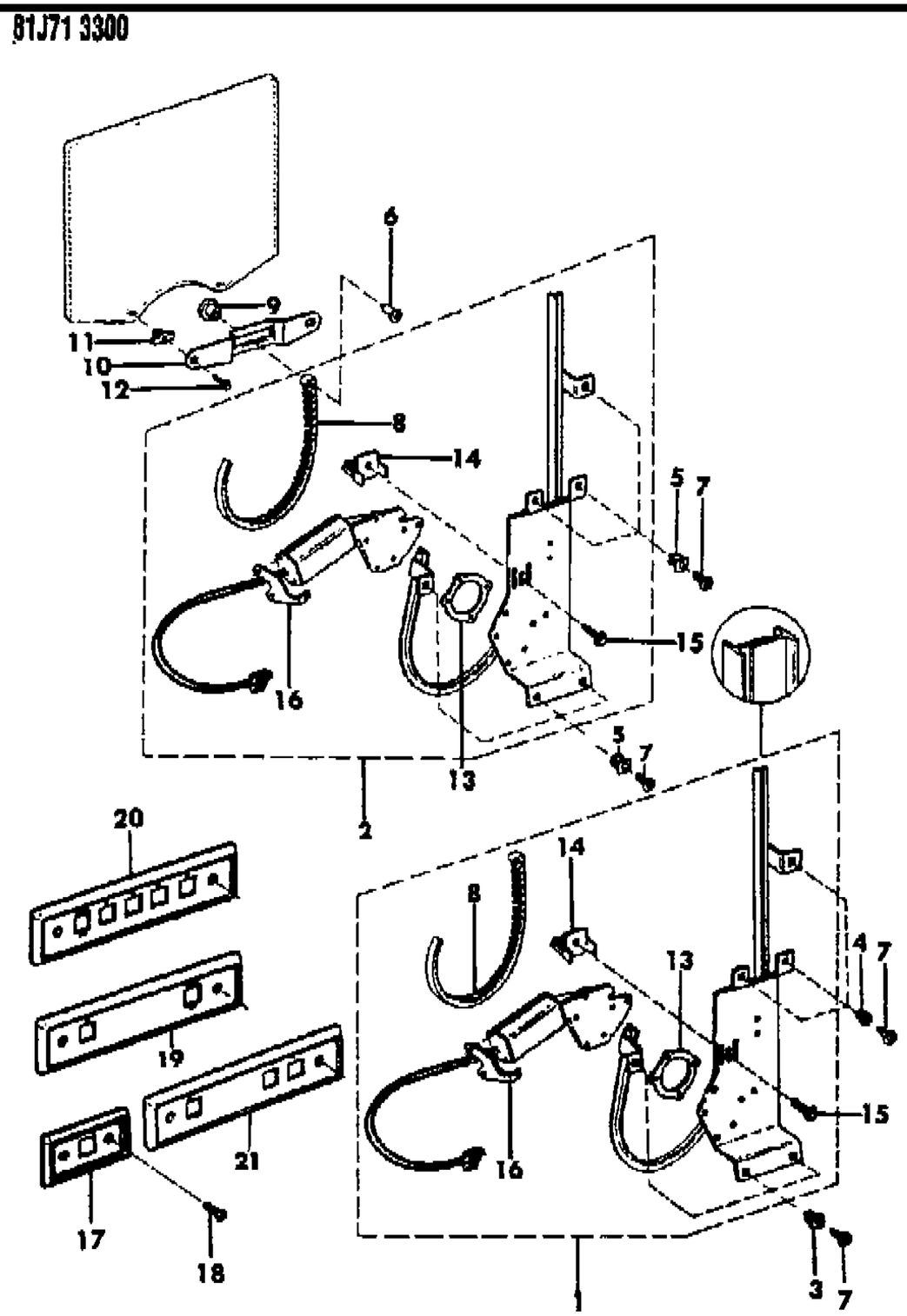

ITEM	PART NUMBER	QTY	BODY	MODEL	DESCRIPTION
1	5600 1610-1	1			REGULATOR
2	5600 1612-3	1			REGULATOR
3	J400 7029	AR			NUT
4	J400 7030	AR			NUT
5	J400 0141	AR			NUT
6	J400 7341	4			BOLT
7	J400 5789	AR			SCREW
8	8350 2152-3	2			FLEXRACK ***
9	5600 1615	4			RETAINER
10	J576 1101	4			BRACKET, Glass Lift
11	J400 3706	8			GROMMET
12	J400 0424	8			SCREW
13	J813 4854	4			GASKET
14	J813 4241	4			BRACKET, Glass Stop
15	J400 2203	4			SCREW
16					BRACKET, Support
	J813 4836	1			Right
	J813 4835	1			Left
17					BEZEL, Switch
	J373 1897	2			Bright, 1985
	J373 1890	2			Woodgrain, 1985
	5501 1081	2			Woodgrain, 1986
18	J941 6327	AR			SCREW
19					BEZEL, Switch
	J575 1880	1			Bright, 1985
	J373 4398	1			Woodgrain, 1985
	5501 1084	1			Woodgrain, 1986
20					BEZEL, Switch
	J373 1900	1			Bright, 1985
	J373 1893	1			Woodgrain, 1985
	5501 1085	1			Woodgrain, 1986
21	J575 1885	1			BEZEL, Switch, 1985

MODEL CODES

16=Cherokee 2 Dr.(1981-83)
17=Cherokee 2 Dr.(1981-83)
73=Cherokee 2WD-2 Dr.(1984-86)
74=Cherokee 2WD-4 Dr.(1984-86)
18=Cherokee 4 Dr.(1981-83)
77=Cherokee 4WD-2 Dr.(1984-86)
78=Cherokee 4WD-4 Dr.(1984-86)
85=CJ-5 (1981-83)
86=CJ-6(1981)
87=CJ-7(1981-86)
88=CJ-8, Scrambler(1981-86)
64=Comanche 2WD-6 Ft. Box(1986)
66=Comanche 2WD-7 Ft. Box(1986)
63=Comanche 4WD-6 Ft. Box(1986)
65=Comanche 4WD-7 Ft. Box(1986)
15=Grand Wagoneer 4 Dr.(1984-86)
25=J-10 Truck 7 Ft. Box(1981-84)
26=J10 Truck 8 Ft. Box(1981-86)
27=J-20 Truck 8 Ft. Box(1981-86)
15=Wagoneer 4 Dr.(1981-83)
75=Wagoneer 4WD-4 Dr.(1984-86)

BODY
CJ=CJ-5, CJ-6, CJ-7, CJ-8, Scrambler(1981-86)
MJ=Comanche Pickup(1986)

STYLES
SJ=Wagoneer(1981-83), Grand Wagoneer(1984-86), Cherokee(1981-83), J-10, J-20(1981-86)
XJ=Wagoneer(1984-86), Cherokee(1984-86)

AR = Use as Required - = Non Illustrated Part P.A.R. = Paint as Required

« RETURN TO GROUP INDEX

GLASS, DOOR FRONT AND REAR SJ WAGONEER, SJ CHEROKEE, J10, J20
Figure 23C-3400

81J71 3400

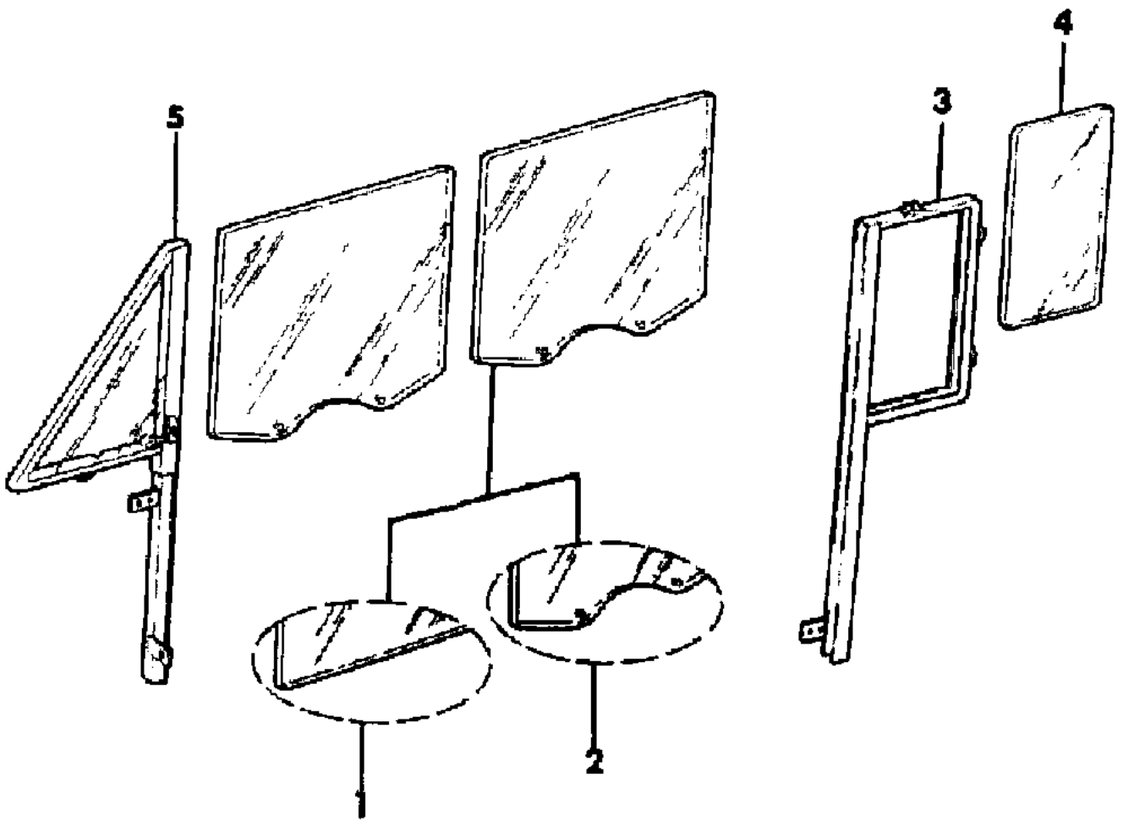

ITEM	PART NUMBER	QTY	BODY	MODEL	DESCRIPTION
1					GLASS, Door, Manual Regulator, 1981-86 Type 1 Electric
					Regulator, 1981-82
	J546 9511	2			Clear
	J546 9510	2			Tinted
	J575 6135	2			Clear, Export
	J575 6136	2			Tinted, Export
2					GLASS, Door, Flexrack Electric Regulator, 1982-86
	J576 1294	2			Clear
	J576 1295	2			Tinted
	J576 1302	2			Tinted, Export
3					GLASS, Rear Door, Fixed
	J575 2754-5	1			Clear
	J575 2756-7	1			Tinted
	J575 6170-1	1			Clear, Export
	J575 6172-3	1			Tinted, Export
4					GLASS, Fixed
	J546 9666	2			Clear
	J546 9520	2			Tinted
	J575 6168	2			Clear, Export
	J575 6169	2			Tinted, Export
5					VENT, Pivoting
					BLACK FRAME
	J813 4376-7	1			Clear
	J813 4378-9	1			Tinted
	J813 4378-9	1			Tinted
	J813 4418	1			Tinted, Right, Export, 1982-85
	J813 4417	1			Tinted, Left, Export, 1982-85
					CHROME FRAME
	J575 2740-1	1			Clear, 1981-82
	J575 2742-3	1			Tinted, 1981-82
	J575 6164-5	1			Clear, Export, 1981
	J575 6166-7	1			Tinted, Export, 1981-82

MODEL CODES

16=Cherokee 2 Dr.(1981-83)
17=Cherokee 2 Dr.(1981-83)
73=Cherokee 2WD-2 Dr.(1984-86)
74=Cherokee 2WD-4 Dr.(1984-86)
18=Cherokee 4 Dr.(1981-83)
77=Cherokee 4WD-2 Dr.(1984-86)
78=Cherokee 4WD-4 Dr.(1984-86)
85=CJ-5 (1981-83)
86=CJ-6(1981)
87=CJ-7(1981-86)
88=CJ-8, Scrambler(1981-86)
64=Comanche 2WD-6 Ft. Box(1986)
66=Comanche 2WD-7 Ft. Box(1986)
63=Comanche 4WD-6 Ft. Box(1986)
65=Comanche 4WD-7 Ft. Box(1986)
15=Grand Wagoneer 4 Dr.(1984-86)
25=J-10 Truck 7 Ft. Box(1981-84)
26=J10 Truck 8 Ft. Box(1981-86)
27=J-20 Truck 8 Ft. Box(1981-86)
15=Wagoneer 4 Dr.(1981-83)
75=Wagoneer 4WD-4 Dr.(1984-86)

BODY
CJ=CJ-5, CJ-6, CJ-7, CJ-8, Scrambler(1981-86)
MJ=Comanche Pickup(1986)

STYLES
SJ=Wagoneer(1981-83), Grand Wagoneer(1984-86), Cherokee(1981-83), J-10, J-20(1981-86)
XJ=Wagoneer(1984-86), Cherokee(1984-86)

AR = Use as Required - = Non Illustrated Part P.A.R. = Paint as Required

« RETURN TO GROUP INDEX

WEATHERSTRIPS, DOOR FRONT AND REAR SJ WAGONEER, SJ CHEROKEE, J10, J20
Figure 23C-3500

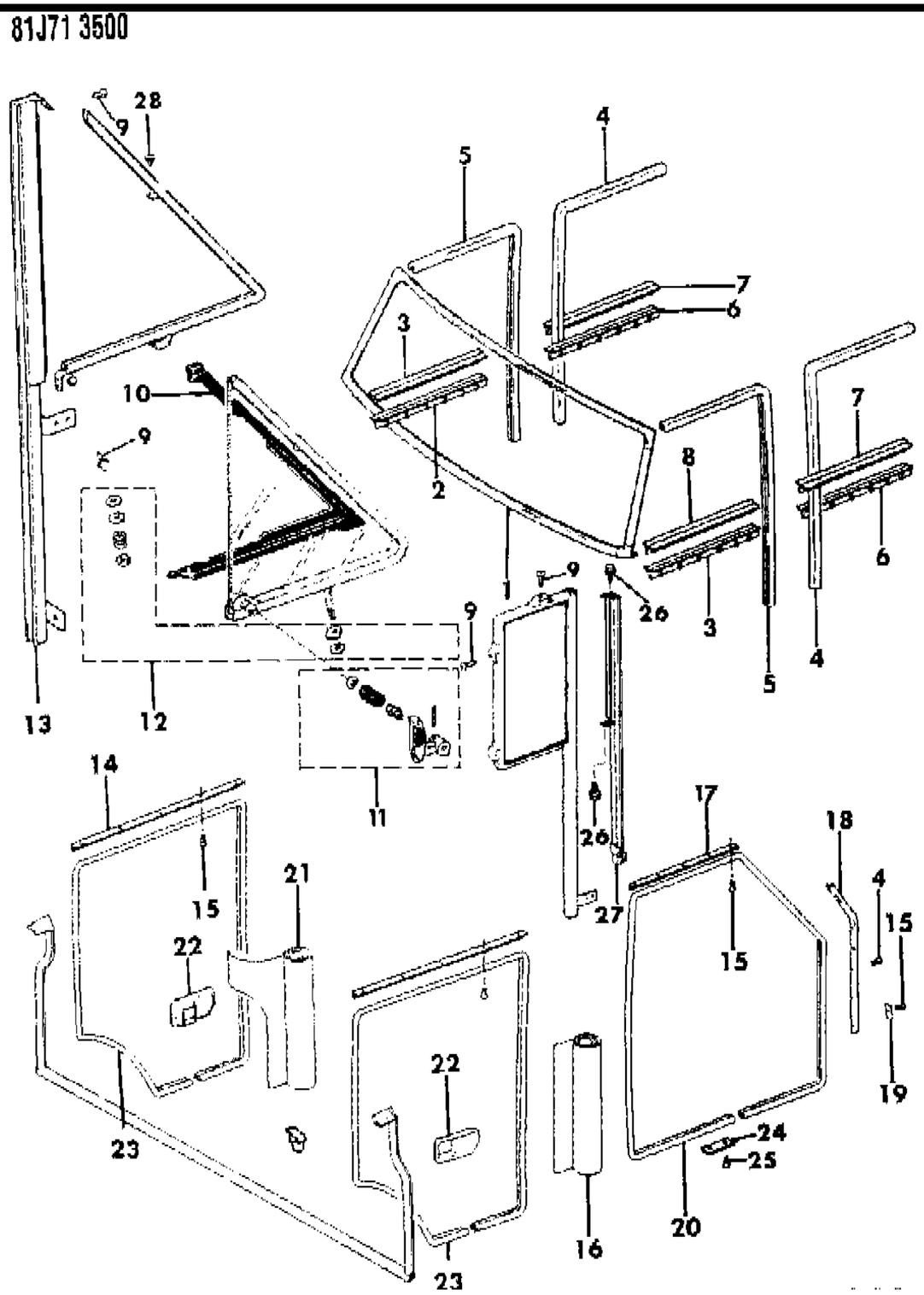

ITEM	PART NUMBER	QTY	BODY	MODEL	DESCRIPTION
1					SEAL, Windshield, See 23A
2					WEATHERSTRIP, Inner
	J546 2330	1			1981-83
	J576 1986	1			1983-86
3					WEATHERSTRIP, Outer
	J098 1604	2			1981-83
	J576 1982	2			1983-86
4	J546 9514	2			CHANNEL, Glass Run
5	J546 9507	2			CHANNEL, Glass Run
6					WEATHERSTRIP, Inner
	J546 2331	2			1981-83
	J576 1984	2			1983-86
7					WEATHERSTRIP, Outer
	J098 1605	2			1981-83
	J576 1983	2			1983-86
8					WEATHERSTRIP, Inner
	J546 2329	1			1981-83
	J576 1985	1			1983-86
9	J941 7282	AR			SCREW
10	J546 5718-9	1			WEATHERSTRIP, Vent
11	J812 8926-7	1			PACKAGE, Vent Handle
12	J812 8923	2			PACKAGE, Spring
13	J575 2750-1	1			BAR, Division
14	J098 5015	2			SHIELD
15	J400 6637	AR			RIVET
16	J575 2678	2			WATERDAM ***
17	J098 5014	2			SHIELD
18	5505 2554-5	1			SHIELD
19	J400 7269	2			WASHER
20					SEAL, Door
	5505 2550	1			Right
	5505 2549	1			Left
21	J575 2679	2			WATERDAM ***
22	J575 4522-3	1			WATERDAM, Switch ***
23					SEAL, Door
	5505 2552	1			Right
	5505 2551	1			Left
24	J097 9385	2			SEAL, Dust
25	J400 6637	4			RIVET

MODEL CODES

16=Cherokee 2 Dr.(1981-83)
17=Cherokee 2 Dr.(1981-83)
73=Cherokee 2WD-2 Dr.(1984-86)
74=Cherokee 2WD-4 Dr.(1984-86)
18=Cherokee 4 Dr.(1981-83)
77=Cherokee 4WD-2 Dr.(1984-86)
78=Cherokee 4WD-4 Dr.(1984-86)
85=CJ-5 (1981-83)
86=CJ-6(1981)
87=CJ-7(1981-86)
88=CJ-8, Scrambler(1981-86)
64=Comanche 2WD-6 Ft. Box(1986)
66=Comanche 2WD-7 Ft. Box(1986)
63=Comanche 4WD-6 Ft. Box(1986)
65=Comanche 4WD-7 Ft. Box(1986)
15=Grand Wagoneer 4 Dr.(1984-86)
25=J-10 Truck 7 Ft. Box(1981-84)
26=J10 Truck 8 Ft. Box(1981-86)
27=J-20 Truck 8 Ft. Box(1981-86)
15=Wagoneer 4 Dr.(1981-83)
75=Wagoneer 4WD-4 Dr.(1984-86)

BODY
CJ=CJ-5, CJ-6, CJ-7, CJ-8, Scrambler(1981-86)
MJ=Comanche Pickup(1986)

STYLES
SJ=Wagoneer(1981-83), Grand Wagoneer(1984-86), Cherokee(1981-83), J-10, J-20(1981-86)
XJ=Wagoneer(1984-86), Cherokee(1984-86)

AR = Use as Required - = Non Illustrated Part P.A.R. = Paint as Required

« RETURN TO GROUP INDEX »

WEATHERSTRIPS, DOOR FRONT AND REAR SJ WAGONEER, SJ CHEROKEE, J10, J20
Figure 23C-3500

81J71 3500

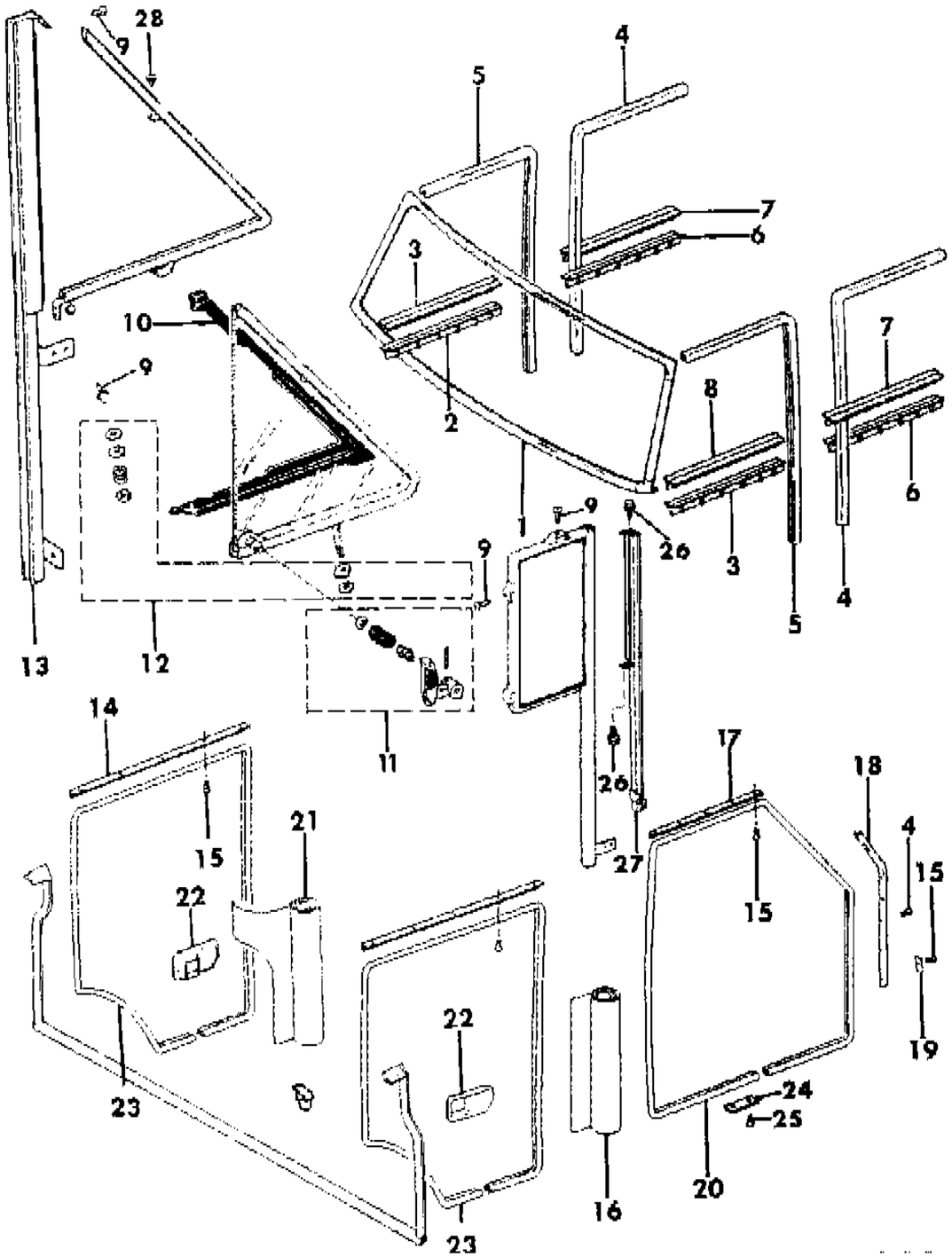

ITEM	PART NUMBER	QTY	BODY	MODEL	DESCRIPTION
26	J400 4801	AR			SCREW
27	J575 2762-3	1			BAR, Division
28	J812 8929	2			RIVET

MODEL CODES

16=Cherokee 2 Dr.(1981-83)	78=Cherokee 4WD-4 Dr.(1984-86)	64=Comanche 2WD-6 Ft. Box(1986)	25=J-10 Truck 7 Ft. Box(1981-84)
17=Cherokee 2 Dr.(1981-83)	85=CJ-5 (1981-83)	66=Comanche 2WD-7 Ft. Box(1986)	26=J10 Truck 8 Ft. Box(1981-86)
73=Cherokee 2WD-2 Dr.(1984-86)	86=CJ-6(1981)	63=Comanche 4WD-6 Ft. Box(1986)	27=J-20 Truck 8 Ft. Box(1981-86)
74=Cherokee 2WD-4 Dr.(1984-86)	87=CJ-7(1981-86)	65=Comanche 4WD-7 Ft. Box(1986)	15=Wagoneer 4 Dr.(1981-83)
18=Cherokee 4 Dr.(1981-83)	88=CJ-8, Scrambler(1981-86)	15=Grand Wagoneer 4 Dr.(1984-86)	75=Wagoneer 4WD-4 Dr.(1984-86)
77=Cherokee 4WD-2 Dr.(1984-86)			

BODY
CJ=CJ-5, CJ-6, CJ-7, CJ-8, Scrambler(1981-86)
MJ=Comanche Pickup(1986)

STYLES
SJ=Wagoneer(1981-83), Grand Wagoneer(1984-86), Cherokee(1981-83), J-10, J-20(1981-86)
XJ=Wagoneer(1984-86), Cherokee(1984-86)

AR = Use as Required - = Non Illustrated Part P.A.R. = Paint as Required

« RETURN TO GROUP INDEX

MIRRORS, EXTERIOR SJ WAGONEER, SJ CHEROKEE, J10, J20
Figure 23C-3600

81J71 3600

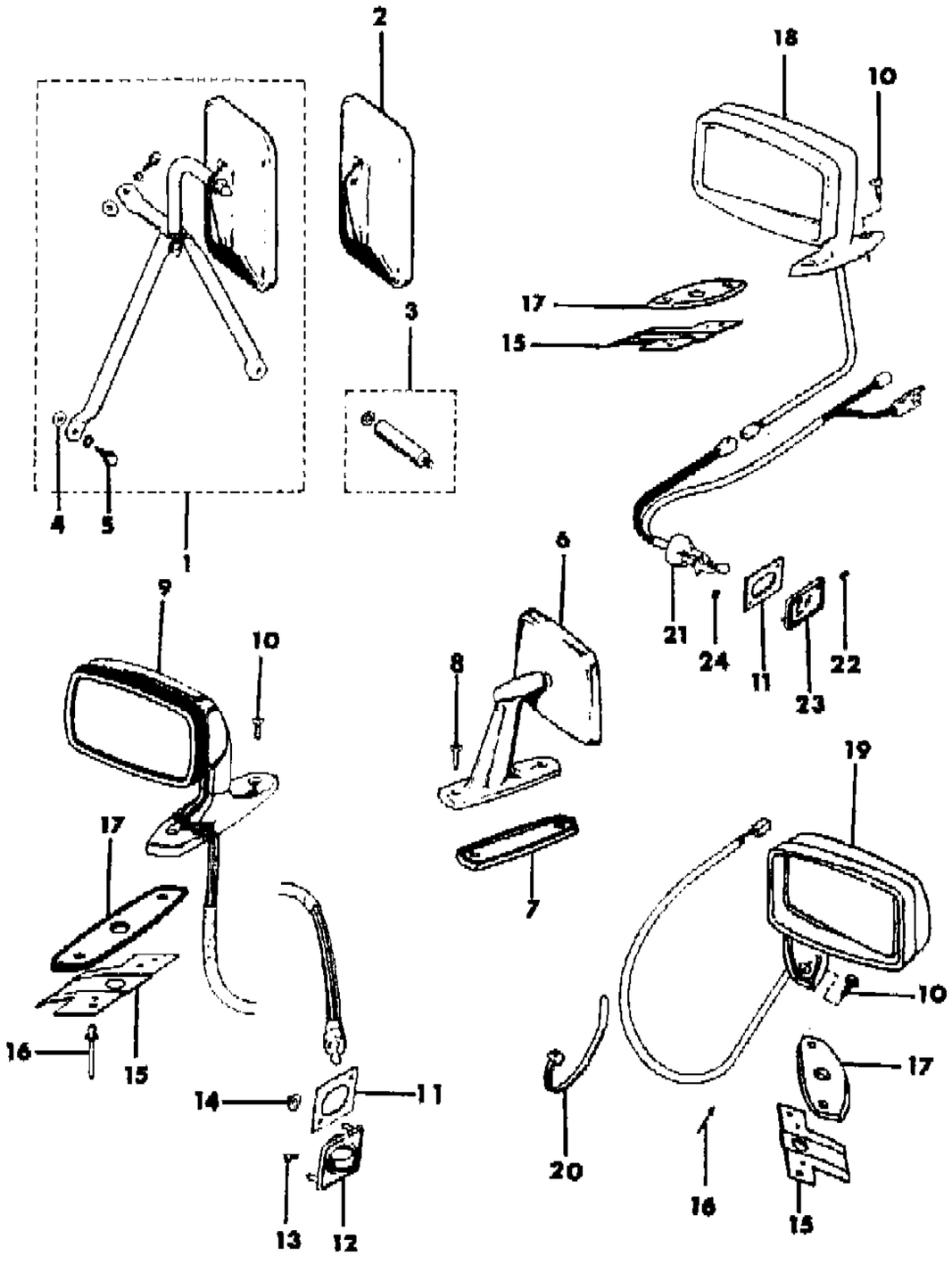

ITEM	PART NUMBER	QTY	BODY	MODEL	DESCRIPTION
1	J812 2824	2			MIRROR, Low Profile
2	J812 2825	2			MIRROR, Low Profile
3	J545 6152	1			PACKAGE, Extension
4	J400 3120	AR			NUT
5	J400 6106	AR			SCREW
6	J097 7877	2			MIROR, Manual ***
7	J097 7705	2			GASKET, Mirror
8	J400 2807	4			SCREW
9					MIRROR, Remote
	J575 1990	1			Right
	J575 1989	1			Left
10	J420 0317	AR			SCREW
11	J575 2278	2			RETAINER, Switch
12	J373 2132	2			ESCUTCHEON
13	J420 0085	2			SCREW
14	J400 6866	4			NUT
15	J575 1974	AR			REINFORCEMENT
16	J400 4962	AR			RIVET
17	J575 1960	AR			GASKET
18	J575 2987	1			MIRROR, Remote, Left
19	J575 2986	1			MIRROR, Remote, Right
20	J322 3227	2			STRAP
21	J575 6932	1			SWITCH, Mirror
22	J420 0322	1			SCREW
23	J374 0893	1			ESCUTCHEON
24	J400 7022	2			NUT

MODEL CODES

16=Cherokee 2 Dr.(1981-83)
17=Cherokee 2 Dr.(1981-83)
73=Cherokee 2WD-2 Dr.(1984-86)
74=Cherokee 2WD-4 Dr.(1984-86)
18=Cherokee 4 Dr.(1981-83)
77=Cherokee 4WD-2 Dr.(1984-86)
78=Cherokee 4WD-4 Dr.(1984-86)
85=CJ-5 (1981-83)
86=CJ-6(1981)
87=CJ-7(1981-86)
88=CJ-8, Scrambler(1981-86)
64=Comanche 2WD-6 Ft. Box(1986)
66=Comanche 2WD-7 Ft. Box(1986)
63=Comanche 4WD-6 Ft. Box(1986)
65=Comanche 4WD-7 Ft. Box(1986)
15=Grand Wagoneer 4 Dr.(1984-86)
25=J-10 Truck 7 Ft. Box(1981-84)
26=J10 Truck 8 Ft. Box(1981-86)
27=J-20 Truck 8 Ft. Box(1981-86)
15=Wagoneer 4 Dr.(1981-83)
75=Wagoneer 4WD-4 Dr.(1984-86)

BODY
CJ=CJ-5, CJ-6, CJ-7, CJ-8, Scrambler(1981-86)
MJ=Comanche Pickup(1986)

STYLES
SJ=Wagoneer(1981-83), Grand Wagoneer(1984-86), Cherokee(1981-83), J-10, J-20(1981-86)
XJ=Wagoneer(1984-86), Cherokee(1984-86)

AR = Use as Required - = Non Illustrated Part P.A.R. = Paint as Required

« RETURN TO GROUP INDEX

ILLUSTRATION NOT AVAILABLE AT TIME OF PUBLICATION

GROUP 23D - WIPER & WASHER AND CYLINDER & KEYS

ILLUSTRATION TITLE	GROUP-FIG. NO.
CJ	
CYLINDERS AND KEYS CJ	Fig. 23D-100
WINDSHIELD WIPER SYSTEM CJ	Fig. 23D-200
WINDSHIELD WASHER SYSTEM CJ	Fig. 23D-300
XJ CHEROKEE, XJ WAGONEER	
CYLINDERS AND KEYS XJ CHEROKEE, XJ WAGONEER, COMANCHE	Fig. 23D-400
WINSHIELD WIPER SYSTEM XJ CHEROKEE, XJ WAGONEER, COMANCHE	Fig. 23D-500
REAR WIPER SYSTEM XJ CHEROKEE, XJ WAGONEER	Fig. 23D-600
WINDSHIELD AND REAR WASHER SYSTEM XJ CHEROKEE, XJ WAGONEER, COMANCHE WITH GAS ENGINE	Fig. 23D-700
WINSHIELD AND REAR WASHER SYSTEM XJ CHEROKEE WITH DIESEL ENGINE	Fig. 23D-800
SJ CHEROKEE, SJ WAGONEER, J10, J20	
CYLINDERS AND KEYS SJ CHEROKEE, SJ WAGONEER, J10, J20	Fig. 23D-900
WINSHIELD WIPER AND WASHER SYSTEM SJ CHEROKEE, SJ WAGONEER, J10, J20	Fig. 23D-1000
MOTOR COMPONENTS, WINDSHIELD WIPER SJ CHEROKEE, SJ WAGONEER, J10, J20	Fig. 23D-1100

CYLINDERS AND KEYS CJ
Figure 23D-100

81J72 100

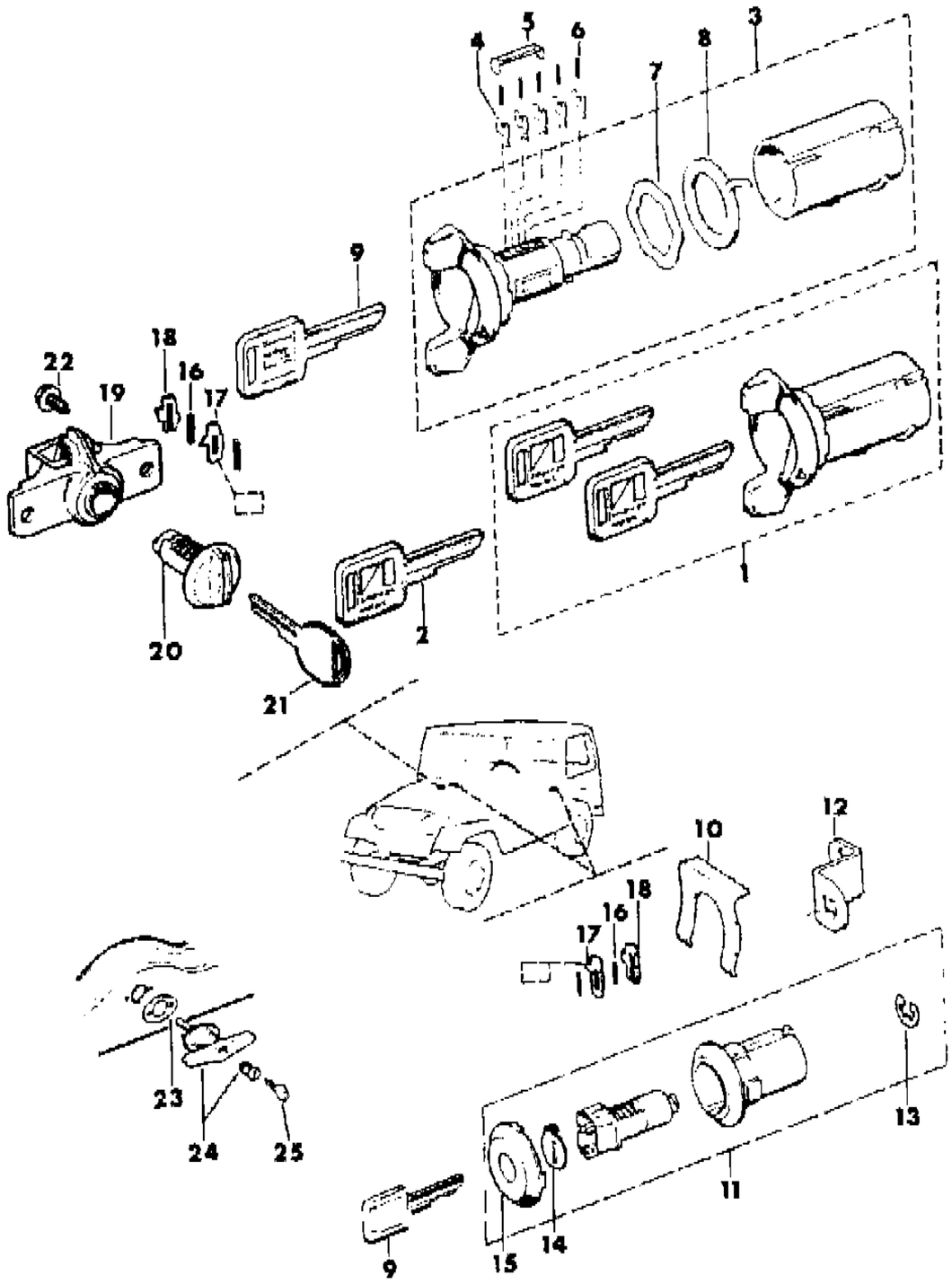

ITEM	PART NUMBER	QTY	BODY	MODEL	DESCRIPTION
1	8350 1971	1			CYLINDER, Ignition Switch Lock, 1985-86
2	8350 1972	AR			KEY, 1985-86
3	J812 0081	1			CYLINDER, Ignition Switch Lock, 1981-84
4					TUMBLER, 1981-84 ***
	J448 7670	AR			No. 1
	J448 7671	AR			No. 2
	J448 7672	AR			No. 3
	J448 7673	AR			No. 4
	J448 7674	AR			No. 5
5	J448 7675	1			RETAINER, 1981-84
6	J448 7676	5			SPRING, 1981-84
7	J448 7660	1			WASHER
8	J448 7659	1			RING, 1981-84
9					KEY
	J364 1914	AR			1981-84
	J364 1913	AR			1985-86
10	J351 6003	2			RETAINER, Lock
11	J812 2874	AR			CYLINDER, Door Lock, Uncoded
12	J576 2370	2			LEVER
13	J400 2250	2			RETAINER, Lock
14	J813 3585	2			SHUTTER, Lock ***
15	J812 7677	2			CAP, Lock Cylinder
16	J812 2881	AR			SPRING
17					TUMBLER, Lock ***
	J812 2876	AR			No. 1
	J812 2877	AR			No. 2
	J812 2878	AR			No. 3
	J812 2879	AR			No. 4
	J812 2880	AR			No. 5
18	J812 2875	1			RETAINER, Tumbler
19	J363 2495	1			HOUSING, Glovebox Lock
20	J812 5764	1			CYLINDER, Glovebox Lock, Uncoded
21	J364 1913	1			KEY
22	J448 9486	2			SCREW
23	J095 3289	1			GASKET
24					HANDLE
	J812 4246	1			Ribbed Surface, w/Cylinder, w/o Key, 1981
	J813 3802	1			Smooth Surface, w/Cylinder, w/o Key, 1981-86
25	J364 1913	1			KEY

MODEL CODES

16=Cherokee 2 Dr.(1981-83)
17=Cherokee 2 Dr.(1981-83)
73=Cherokee 2WD-2 Dr.(1984-86)
74=Cherokee 2WD-4 Dr.(1984-86)
18=Cherokee 4 Dr.(1981-83)
77=Cherokee 4WD-2 Dr.(1984-86)
78=Cherokee 4WD-4 Dr.(1984-86)
85=CJ-5 (1981-83)
86=CJ-6(1981)
87=CJ-7(1981-86)
88=CJ-8, Scrambler(1981-86)
64=Comanche 2WD-6 Ft. Box(1986)
66=Comanche 2WD-7 Ft. Box(1986)
63=Comanche 4WD-6 Ft. Box(1986)
65=Comanche 4WD-7 Ft. Box(1986)
15=Grand Wagoneer 4 Dr.(1984-86)
25=J-10 Truck 7 Ft. Box(1981-84)
26=J10 Truck 8 Ft. Box(1981-86)
27=J-20 Truck 8 Ft. Box(1981-86)
15=Wagoneer 4 Dr.(1981-83)
75=Wagoneer 4WD-4 Dr.(1984-86)

BODY
CJ=CJ-5, CJ-6, CJ-7, CJ-8, Scrambler(1981-86)
MJ=Comanche Pickup(1986)

STYLES
SJ=Wagoneer(1981-83), Grand Wagoneer(1984-86), Cherokee(1981-83), J-10, J-20(1981-86)
XJ=Wagoneer(1984-86), Cherokee(1984-86)

AR = Use as Required - = Non Illustrated Part P.A.R. = Paint as Required

« RETURN TO GROUP INDEX

WINDSHIELD WIPER SYSTEM CJ
Figure 23D-200

81J72 200

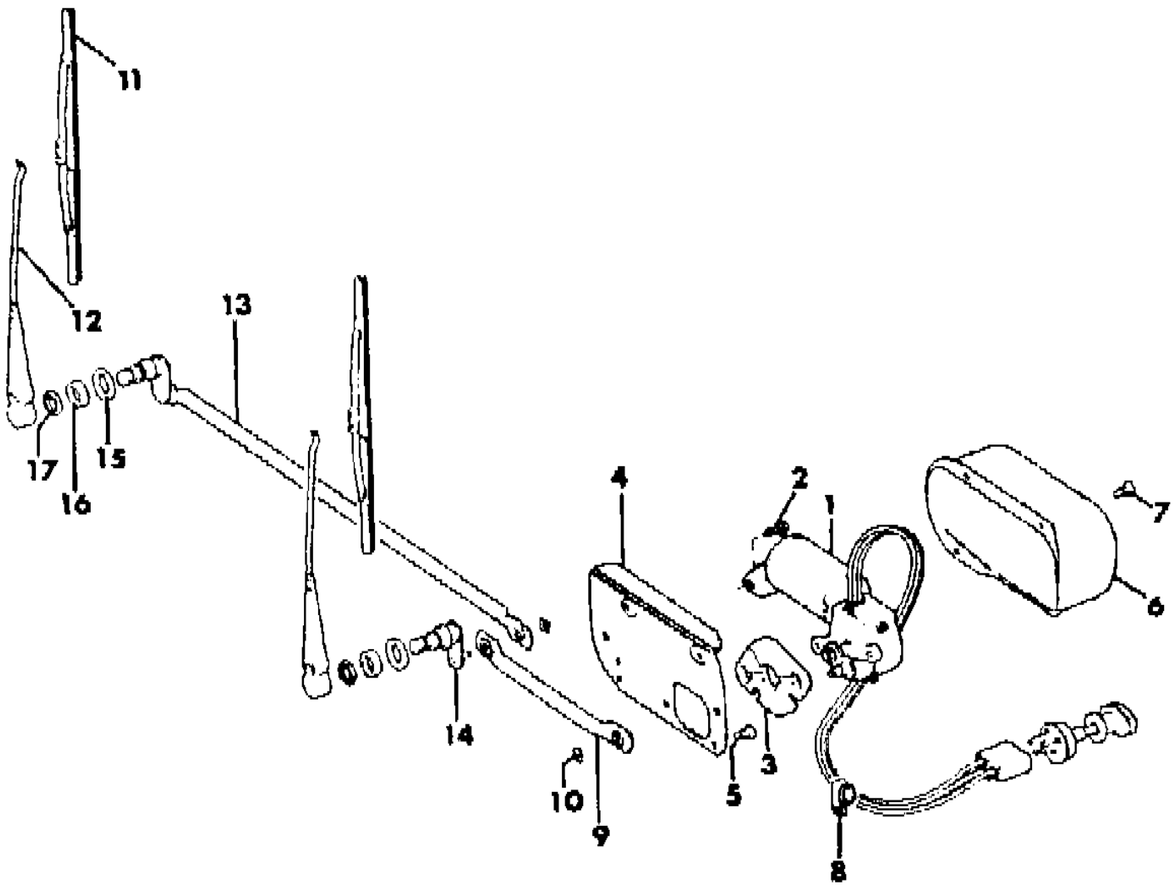

ITEM	PART NUMBER	QTY	BODY	MODEL	DESCRIPTION
1					MOTOR, Wiper
	J545 3956	1			Left Hand Drive, 1981-82
	J576 3696	1			Left Hand Drive, 1983-86
	J576 2628	1			Right Hand Drive
2	J400 5765	3			SCREW
3	J545 9282	1			GASKET
4	J575 6806	1			PLATE
5	J812 0052	2			SCREW
6	J545 3963	1			COVER
7	J400 5969	3			SCREW
8	J400 5669	1			CLAMP
9	J545 3960	1			ARM, Wiper Motor Drive
10	J095 7868	1			RING, Retaining
11					BLADE, Wiper
	J576 2336	2			Black
	J575 8032	2			Bright
12					ARM, Wiper
	J576 2337	2			Black
	J575 8005	2			Bright
	J805 3246	2			Export, Right Hand Drive
13	J545 3958	1			PIVOT, Right
14	J545 3957	1			PIVOT, Left
15	J097 3658	2			GASKET
16	J545 9081	2			SPACER
17					NUT
	J400 7058	2			Black
	J400 5672	2			Bright

MODEL CODES

16=Cherokee 2 Dr.(1981-83)	78=Cherokee 4WD-4 Dr.(1984-86)	64=Comanche 2WD-6 Ft. Box(1986)	25=J-10 Truck 7 Ft. Box(1981-84)
17=Cherokee 2 Dr.(1981-83)	85=CJ-5 (1981-83)	66=Comanche 2WD-7 Ft. Box(1986)	26=J10 Truck 8 Ft. Box(1981-86)
73=Cherokee 2WD-2 Dr.(1984-86)	86=CJ-6(1981)	63=Comanche 4WD-6 Ft. Box(1986)	27=J-20 Truck 8 Ft. Box(1981-86)
74=Cherokee 2WD-4 Dr.(1984-86)	87=CJ-7(1981-86)	65=Comanche 4WD-7 Ft. Box(1986)	15=Wagoneer 4 Dr.(1981-83)
18=Cherokee 4 Dr.(1981-83)	88=CJ-8, Scrambler(1981-86)	15=Grand Wagoneer 4 Dr.(1984-86)	75=Wagoneer 4WD-4 Dr.(1984-86)
77=Cherokee 4WD-2 Dr.(1984-86)			

BODY
CJ=CJ-5, CJ-6, CJ-7, CJ-8, Scrambler(1981-86)
MJ=Comanche Pickup(1986)

STYLES
SJ=Wagoneer(1981-83), Grand Wagoneer(1984-86), Cherokee(1981-83), J-10, J-20(1981-86)
XJ=Wagoneer(1984-86), Cherokee(1984-86)

AR = Use as Required - = Non Illustrated Part P.A.R. = Paint as Required

« RETURN TO GROUP INDEX

WINDSHIELD WASHER SYSTEM CJ
Figure 23D-300

81J72 300

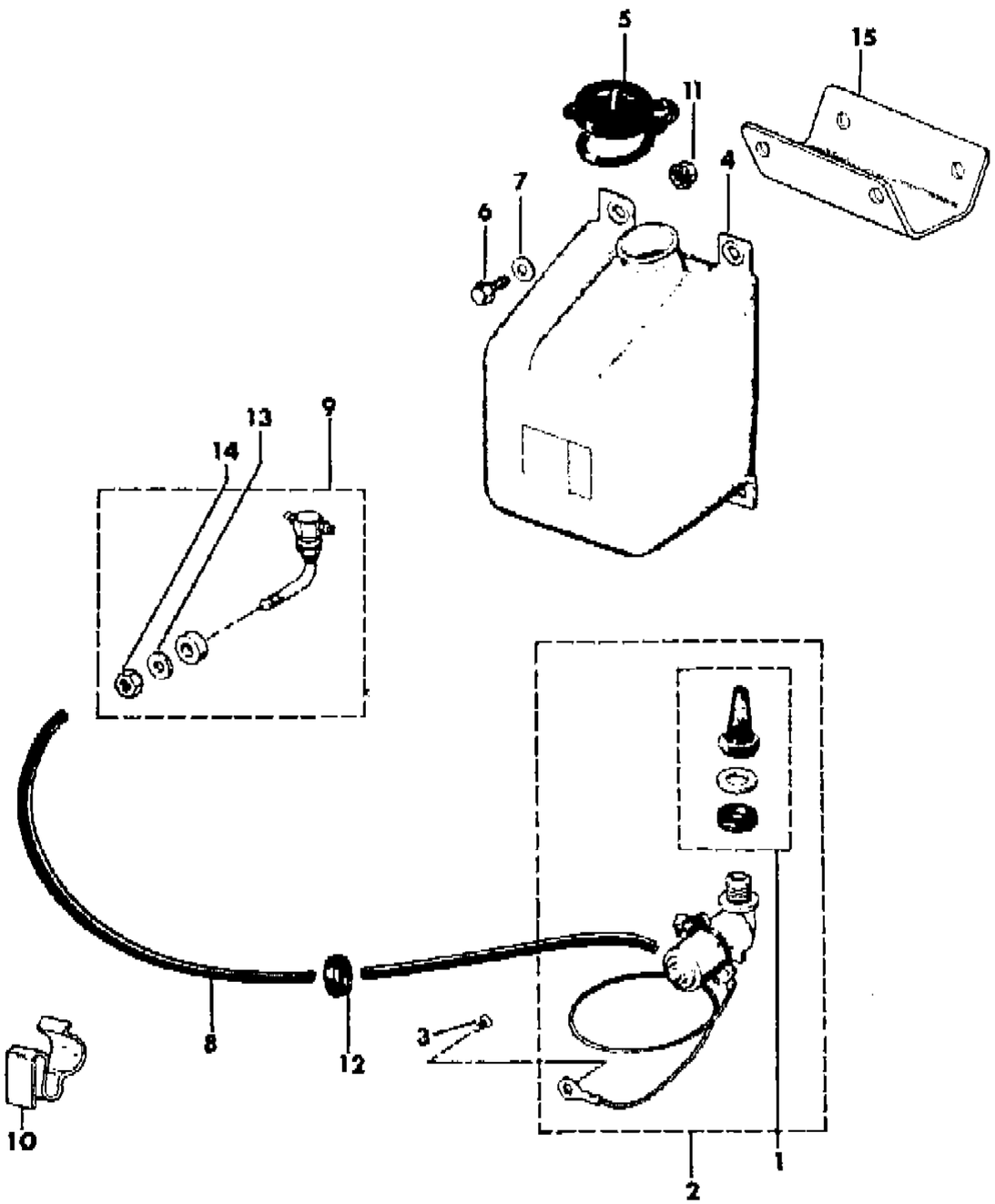

ITEM	PART NUMBER	QTY	BODY	MODEL	DESCRIPTION
1	J812 1405	1			FILTER
2	J812 1404	1			PUMP, Washer
3	J812 0052	1			SCREW
4	J812 1741	1			RESERVOIR
5	J448 9483	1			CAP, Reservoir
6	J067 3600	3			SCREW
7	J400 1091	3			WASHER
8	J812 5811	AR			HOSE
9	J094 2794	1			NOZZLE, Washer
10	J094 5201	1			CLIP
11	J941 6918	3			NUT
12	J321 3963	1			GROMMET
13	J013 8485	2			WASHER
14	J012 0376	2			NUT
15	J576 1266	1			BRACKET, Export Diesel

MODEL CODES
16=Cherokee 2 Dr.(1981-83)
17=Cherokee 2 Dr.(1981-83)
73=Cherokee 2WD-2 Dr.(1984-86)
74=Cherokee 2WD-4 Dr.(1984-86)
18=Cherokee 4 Dr.(1981-83)
77=Cherokee 4WD-2 Dr.(1984-86)
78=Cherokee 4WD-4 Dr.(1984-86)
85=CJ-5 (1981-83)
86=CJ-6(1981)
87=CJ-7(1981-86)
88=CJ-8, Scrambler(1981-86)
64=Comanche 2WD-6 Ft. Box(1986)
66=Comanche 2WD-7 Ft. Box(1986)
63=Comanche 4WD-6 Ft. Box(1986)
65=Comanche 4WD-7 Ft. Box(1986)
15=Grand Wagoneer 4 Dr.(1984-86)
25=J-10 Truck 7 Ft. Box(1981-84)
26=J10 Truck 8 Ft. Box(1981-86)
27=J-20 Truck 8 Ft. Box(1981-86)
15=Wagoneer 4 Dr.(1981-83)
75=Wagoneer 4WD-4 Dr.(1984-86)

BODY
CJ=CJ-5, CJ-6, CJ-7, CJ-8, Scrambler(1981-86)
MJ=Comanche Pickup(1986)

STYLES
SJ=Wagoneer(1981-83), Grand Wagoneer(1984-86), Cherokee(1981-83), J-10, J-20(1981-86)
XJ=Wagoneer(1984-86), Cherokee(1984-86)

AR = Use as Required - = Non Illustrated Part P.A.R. = Paint as Required

« RETURN TO GROUP INDEX

CYLINDERS AND KEYS XJ CHEROKEE, XJ WAGONEER, COMANCHE
Figure 23D-400

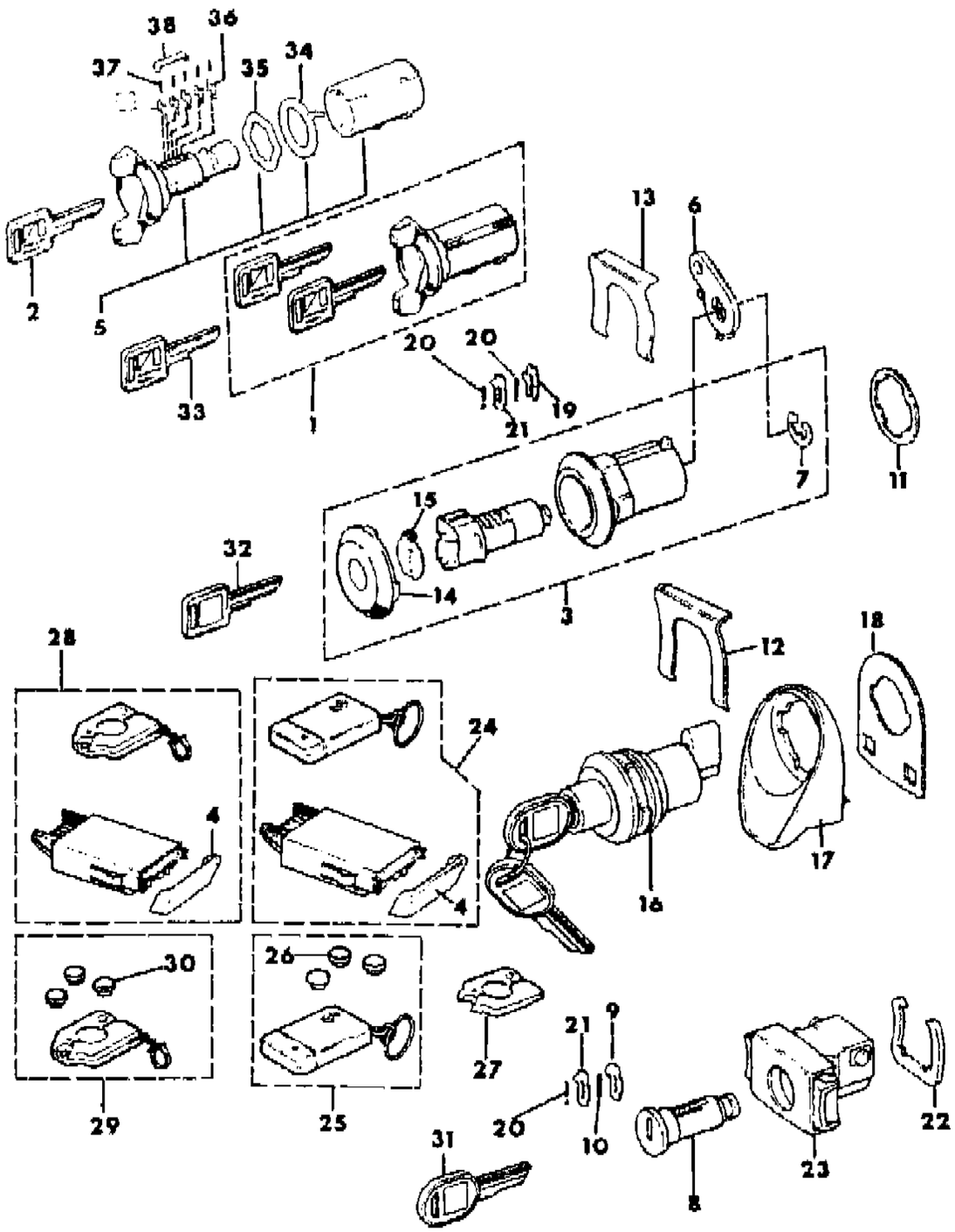

ITEM	PART NUMBER	QTY	BODY	MODEL	DESCRIPTION
1	8350 1971	1			CYLINDER, Ignition Switch Lock, Coded, 1985-86
2	J364 1914	1			KEY, 1984
3	J812 2874	2			CYLINDER, Door Lock, Uncoded
4	T103 0528	1			LENS, Keyless Entry, Receiver
5	J812 0081	1			CYLINDER, Ignition Switch Lock
6	J360 1333	2			LEVER
7	J400 2250	2			RETAINER, Lock
8	8350 0485	1			CYLINDER, Glovebox Lock, Uncoded
9	8350 0486	1			TUMBLER, Anti-Rattle ***
10	8350 0487	1			SPRING, Anti-Rattle
11	J373 2585	2			GASKET
12	J367 9995	1			RETAINER, Lock
13	J351 6003	2			RETAINER, Lock
14	J812 7677	2			CAP
15	J813 3585	2			SHUTTER, Lock ***
16	8351 0179	1			CYLINDER, Liftgate Lock, Coded
17	5500 1135	1			HANDLE
18	5500 5162	1			GASKET
19	J812 2875	1			RETAINER, Tumbler
20	J812 2881	AR			SPRING
21					TUMBLER ***
	J812 2876	AR			No. 1
	J812 2877	AR			No. 2
	J812 2878	AR			No. 3
	J812 2879	AR			No. 4
	J812 2880	AR			No. 5
22	5500 4962	1			RETAINER, Lock
23					LATCH, Glovebox
	5500 2919	1			Almond
	5500 7800	1			Black
	5500 7111	1			Med. Blue
	5500 2918	1			Slate Blue
	5501 5407	1			Charcoal
	5501 0846	1			Cordovan
	5500 2920	1			Garnet
	5500 6235	1			Honey
	5500 2921	1			Nutmeg
	3501 1603	1			Tan
24	T136 6133	1			RECEIVER, Keyless Entry, w/Transmitter

MODEL CODES

16=Cherokee 2 Dr.(1981-83)
17=Cherokee 2 Dr.(1981-83)
73=Cherokee 2WD-2 Dr.(1984-86)
74=Cherokee 2WD-4 Dr.(1984-86)
18=Cherokee 4 Dr.(1981-83)
77=Cherokee 4WD-2 Dr.(1984-86)
78=Cherokee 4WD-4 Dr.(1984-86)
85=CJ-5 (1981-83)
86=CJ-6(1981)
87=CJ-7(1981-86)
88=CJ-8, Scrambler(1981-86)
64=Comanche 2WD-6 Ft. Box(1986)
66=Comanche 2WD-7 Ft. Box(1986)
63=Comanche 4WD-6 Ft. Box(1986)
65=Comanche 4WD-7 Ft. Box(1986)
15=Grand Wagoneer 4 Dr.(1984-86)
25=J-10 Truck 7 Ft. Box(1981-84)
26=J10 Truck 8 Ft. Box(1981-86)
27=J-20 Truck 8 Ft. Box(1981-86)
15=Wagoneer 4 Dr.(1981-83)
75=Wagoneer 4WD-4 Dr.(1984-86)

BODY
CJ=CJ-5, CJ-6, CJ-7, CJ-8, Scrambler(1981-86)
MJ=Comanche Pickup(1986)

STYLES
SJ=Wagoneer(1981-83), Grand Wagoneer(1984-86), Cherokee(1981-83), J-10, J-20(1981-86)
XJ=Wagoneer(1984-86), Cherokee(1984-86)

AR = Use as Required - = Non Illustrated Part P.A.R. = Paint as Required

« RETURN TO GROUP INDEX »

CYLINDERS AND KEYS XJ CHEROKEE, XJ WAGONEER, COMANCHE
Figure 23D-400

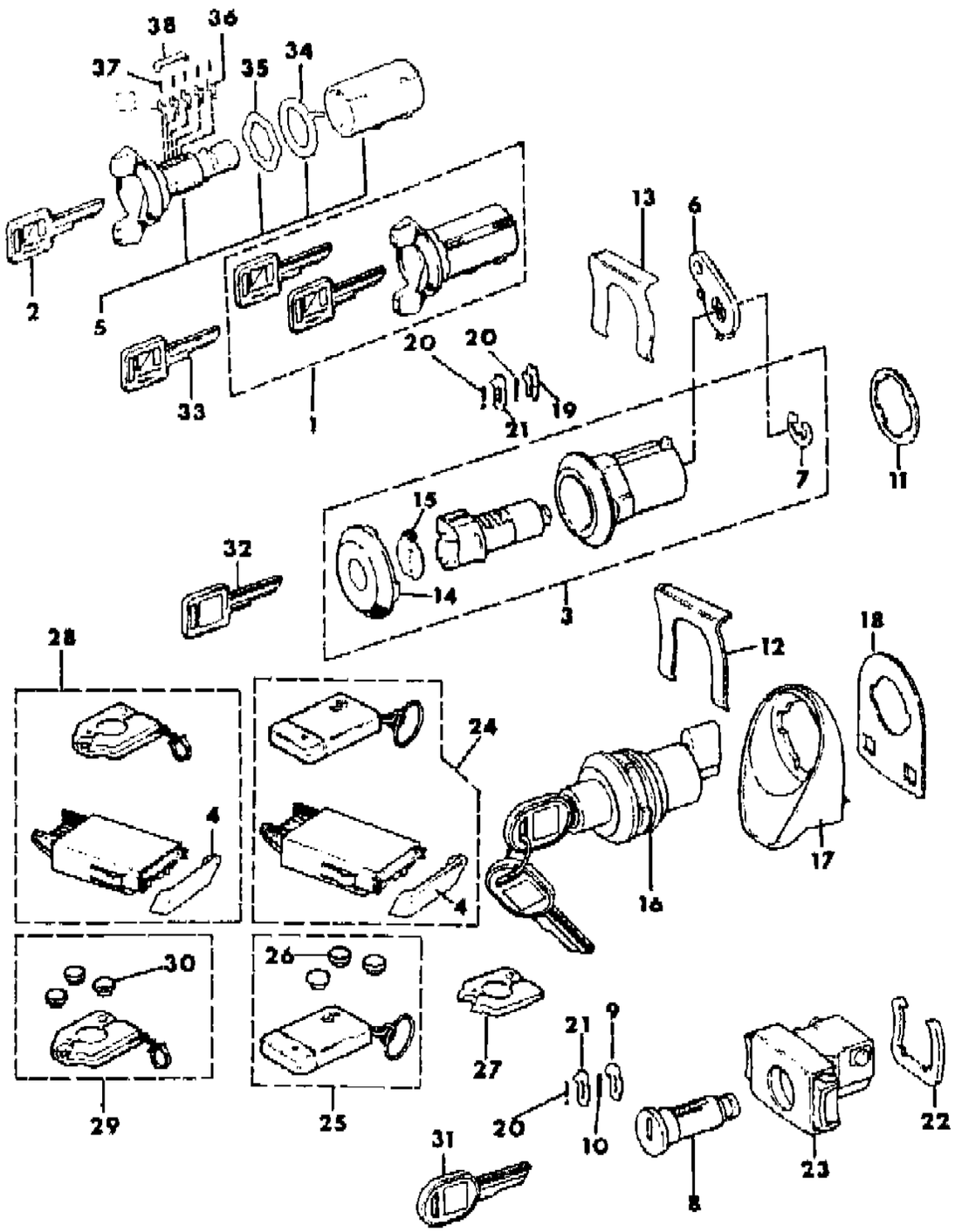

ITEM	PART NUMBER	QTY	BODY	MODEL	DESCRIPTION
25	T103 0867	1			TRANSMITTER, Keyless Entry ***
26	8350 2283	3			BATTERY, Transmitter ***
27	8350 2787	1			COVER, Transmitter
28	T136 5695	1			RECEIVER, Keyless Entry, w/Transmitter
29	T102 7378	1			TRANSMITTER, Keyless Entry ***
30	8350 0489	3			BATTERY, Transmitter ***
31	J364 1913	AR			KEY
32					KEY
	J364 1914	AR			1984
	J364 1913	AR			1985-86
33	8350 1972	AR			KEY
34	J448 7659	1			RING, Antitheft, 1984
35	J448 7660	1			WASHER, 1984
36					TUMBLER, 1984 ***
	J448 7670	AR			No. 1
	J448 7671	AR			No. 2
	J448 7672	AR			No. 3
	J448 7673	AR			No. 4
	J448 7674	AR			No. 5
37	J448 7676	5			SPRING, 1984
38	J448 7675	1			RETAINER, 1984

MODEL CODES
16=Cherokee 2 Dr.(1981-83)
17=Cherokee 2 Dr.(1981-83)
73=Cherokee 2WD-2 Dr.(1984-86)
74=Cherokee 2WD-4 Dr.(1984-86)
18=Cherokee 4 Dr.(1981-83)
77=Cherokee 4WD-2 Dr.(1984-86)
78=Cherokee 4WD-4 Dr.(1984-86)
85=CJ-5 (1981-83)
86=CJ-6(1981)
87=CJ-7(1981-86)
88=CJ-8, Scrambler(1981-86)
64=Comanche 2WD-6 Ft. Box(1986)
66=Comanche 2WD-7 Ft. Box(1986)
63=Comanche 4WD-6 Ft. Box(1986)
65=Comanche 4WD-7 Ft. Box(1986)
15=Grand Wagoneer 4 Dr.(1984-86)
25=J-10 Truck 7 Ft. Box(1981-84)
26=J10 Truck 8 Ft. Box(1981-86)
27=J-20 Truck 8 Ft. Box(1981-86)
15=Wagoneer 4 Dr.(1981-83)
75=Wagoneer 4WD-4 Dr.(1984-86)

BODY
CJ=CJ-5, CJ-6, CJ-7, CJ-8, Scrambler(1981-86)
MJ=Comanche Pickup(1986)

STYLES
SJ=Wagoneer(1981-83), Grand Wagoneer(1984-86), Cherokee(1981-83), J-10, J-20(1981-86)
XJ=Wagoneer(1984-86), Cherokee(1984-86)

AR = Use as Required - = Non Illustrated Part P.A.R. = Paint as Required

« RETURN TO GROUP INDEX

WINSHIELD WIPER SYSTEM XJ CHEROKEE, XJ WAGONEER, COMANCHE
Figure 23D-500

81J72 500

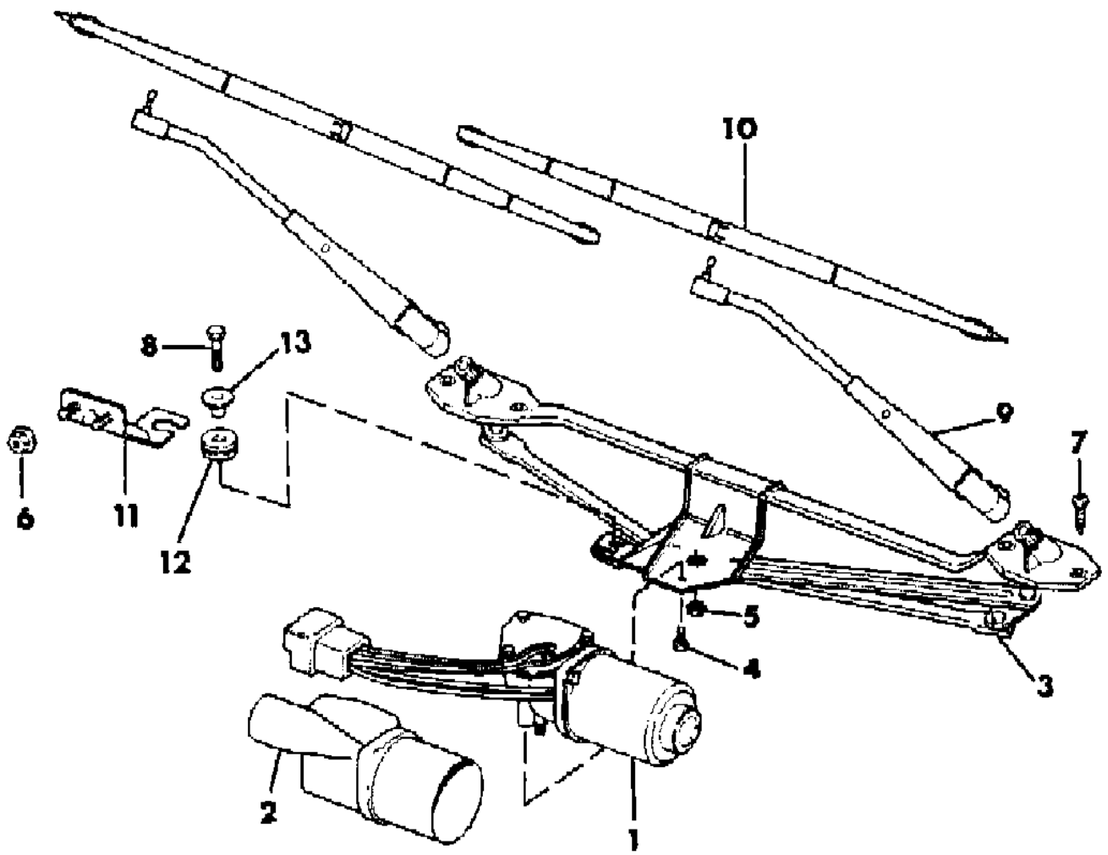

ITEM	PART NUMBER	QTY	BODY	MODEL	DESCRIPTION
1	5600 0899	1			MOTOR, Wiper
2	5600 0901	1			COVER, Motor
3	8350 0660	1			LINKAGE, Wiper ***
4	1150 3876	3			BOLT
5	3420 1866	1			NUT
6	3420 1358	2			NUT
7	3420 1496	4			SCREW
8	3420 1187	1			BOLT
9	5600 1132	2			ARM, Wiper
10	5600 1133	2			BLADE, Wiper
11	5500 3036	1			BRACKET, Mtg.
12	5500 5397	1			GROMMET
13	5500 5398	1			SPACER

MODEL CODES

16=Cherokee 2 Dr.(1981-83)
17=Cherokee 2 Dr.(1981-83)
73=Cherokee 2WD-2 Dr.(1984-86)
74=Cherokee 2WD-4 Dr.(1984-86)
18=Cherokee 4 Dr.(1981-83)
77=Cherokee 4WD-2 Dr.(1984-86)
78=Cherokee 4WD-4 Dr.(1984-86)
85=CJ-5 (1981-83)
86=CJ-6(1981)
87=CJ-7(1981-86)
88=CJ-8, Scrambler(1981-86)
64=Comanche 2WD-6 Ft. Box(1986)
66=Comanche 2WD-7 Ft. Box(1986)
63=Comanche 4WD-6 Ft. Box(1986)
65=Comanche 4WD-7 Ft. Box(1986)
15=Grand Wagoneer 4 Dr.(1984-86)
25=J-10 Truck 7 Ft. Box(1981-84)
26=J10 Truck 8 Ft. Box(1981-86)
27=J-20 Truck 8 Ft. Box(1981-86)
15=Wagoneer 4 Dr.(1981-83)
75=Wagoneer 4WD-4 Dr.(1984-86)

BODY
CJ=CJ-5, CJ-6, CJ-7, CJ-8, Scrambler(1981-86)
MJ=Comanche Pickup(1986)

STYLES
SJ=Wagoneer(1981-83), Grand Wagoneer(1984-86), Cherokee(1981-83), J-10, J-20(1981-86)
XJ=Wagoneer(1984-86), Cherokee(1984-86)

AR = Use as Required - = Non Illustrated Part P.A.R. = Paint as Required

« RETURN TO GROUP INDEX

REAR WIPER SYSTEM XJ CHEROKEE, XJ WAGONEER
Figure 23D-600

81J72 600

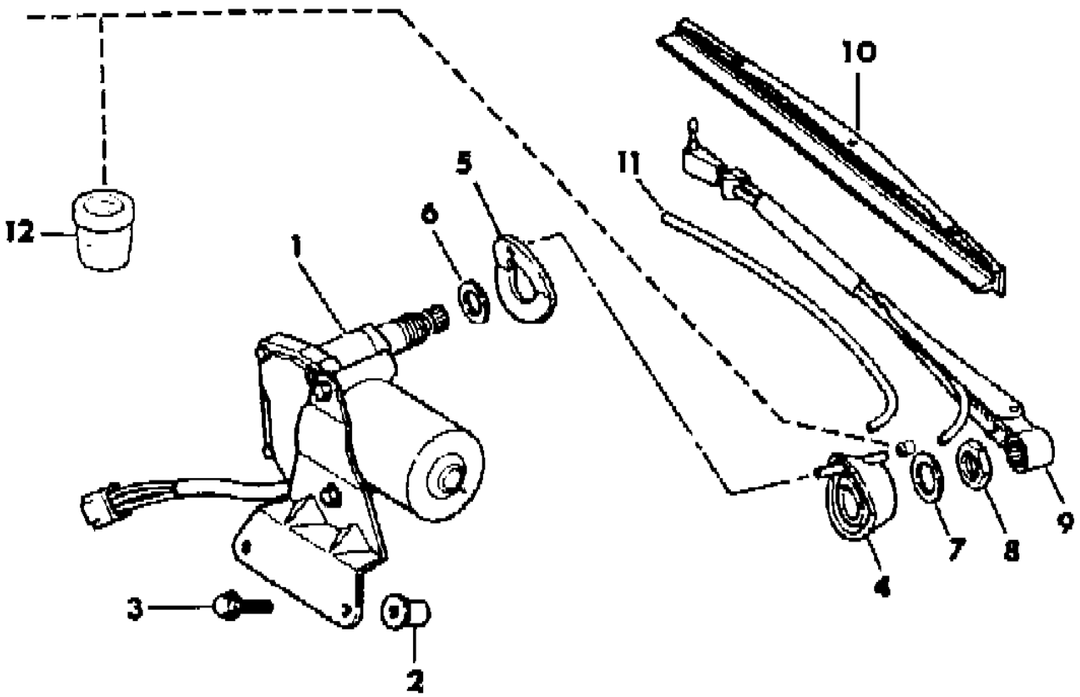

ITEM	PART NUMBER	QTY	BODY	MODEL	DESCRIPTION
1	5600 0701	1			MOTOR, Wiper
2	3420 1589	2			NUT
3	3420 1686	2			SCREW
4	5500 0302	1			BEZEL, Wiper
5	5500 5024	1			GASKET
6	5500 5126	1			SEAL
7	3420 1542	1			WASHER
8	3420 1543	1			NUT
9	5600 0598	1			ARM, w/Nozzle
10	5500 0299	1			BLADE, Wiper
11	3600 0423	AR			HOSE
12	3420 1767	1			CLIP

MODEL CODES

16=Cherokee 2 Dr.(1981-83)
17=Cherokee 2 Dr.(1981-83)
73=Cherokee 2WD-2 Dr.(1984-86)
74=Cherokee 2WD-4 Dr.(1984-86)
18=Cherokee 4 Dr.(1981-83)
77=Cherokee 4WD-2 Dr.(1984-86)
78=Cherokee 4WD-4 Dr.(1984-86)
85=CJ-5 (1981-83)
86=CJ-6(1981)
87=CJ-7(1981-86)
88=CJ-8, Scrambler(1981-86)
64=Comanche 2WD-6 Ft. Box(1986)
66=Comanche 2WD-7 Ft. Box(1986)
63=Comanche 4WD-6 Ft. Box(1986)
65=Comanche 4WD-7 Ft. Box(1986)
15=Grand Wagoneer 4 Dr.(1984-86)
25=J-10 Truck 7 Ft. Box(1981-84)
26=J10 Truck 8 Ft. Box(1981-86)
27=J-20 Truck 8 Ft. Box(1981-86)
15=Wagoneer 4 Dr.(1981-83)
75=Wagoneer 4WD-4 Dr.(1984-86)

BODY
CJ=CJ-5, CJ-6, CJ-7, CJ-8, Scrambler(1981-86)
MJ=Comanche Pickup(1986)

STYLES
SJ=Wagoneer(1981-83), Grand Wagoneer(1984-86), Cherokee(1981-83), J-10, J-20(1981-86)
XJ=Wagoneer(1984-86), Cherokee(1984-86)

AR = Use as Required - = Non Illustrated Part P.A.R. = Paint as Required

« RETURN TO GROUP INDEX

WINDSHIELD AND REAR WASHER SYSTEM XJ CHEROKEE, XJ WAGONEER, COMANCHE WITH GAS ENGINE
Figure 23D-700

81J72 700

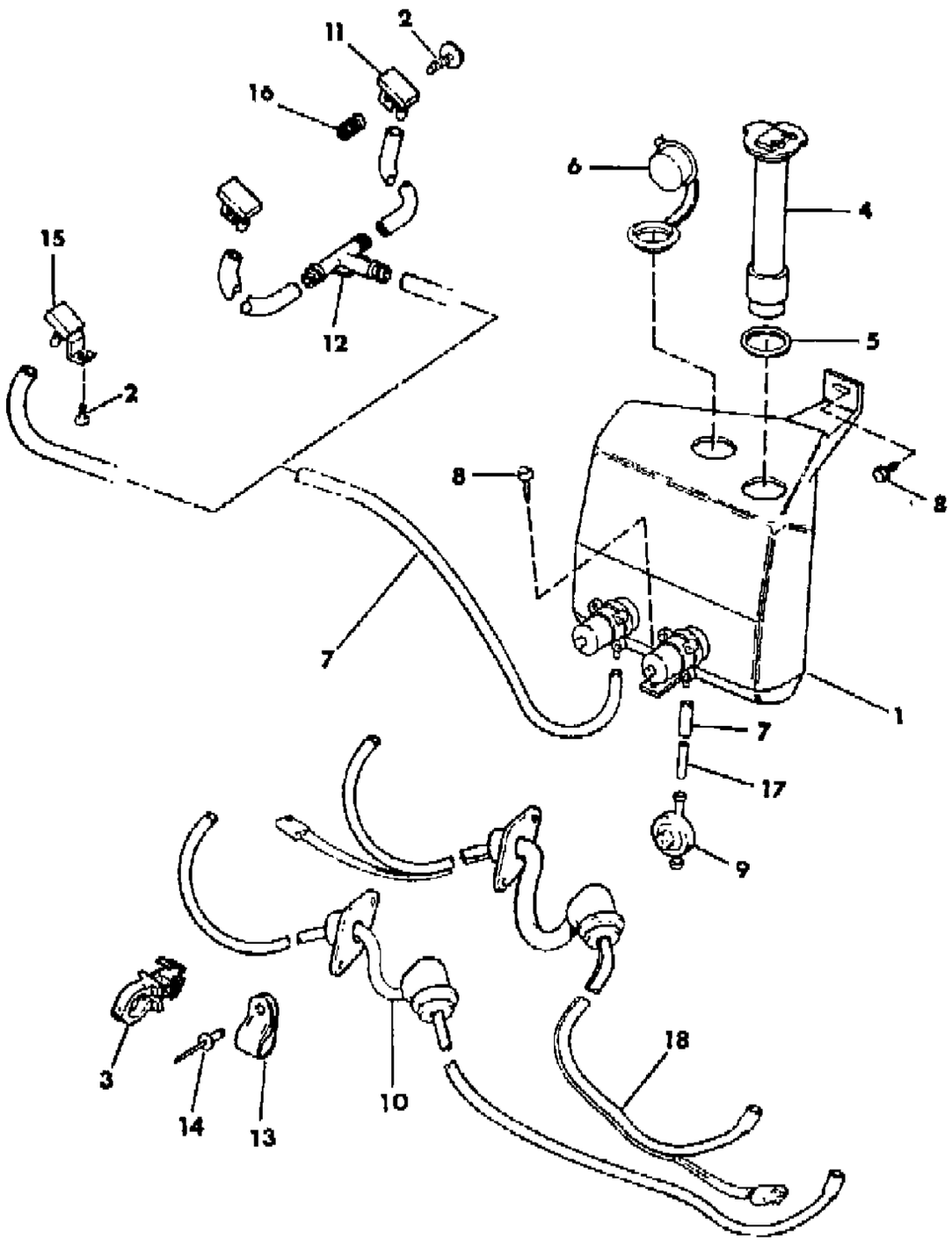

ITEM	PART NUMBER	QTY	BODY	MODEL	DESCRIPTION
1					RESERVOIR, Washer
	8351 0016	1			w/Rear Wiper/Washer, w/Sensor
	8351 0017	1			w/o Rear Wiper/Washer, w/Sensor
	8351 0018	1			w/o Rear Wiper/Washer, w/o Sensor
2					SCREW
	3420 1905	AR			1984-85
	J400 4262	2			1986
3	J400 6550	1			CLIP
4	5600 0873	1			SENSOR, Fluid
5	5600 0595	1			GASKET, Sensor
6	5600 0699	1			CAP, Reservoir
7	8350 1071	AR			HOSE
8	3420 1784	2			SCREW
9	5600 2070	1			VALVE, Check 1986
10	5600 1296	1			HOSE, Rear Washer
11	5600 1601	2			NOZZLE, Washer
12	J321 0891	1			CONNECTOR, Tee
13	3420 1904	1			CLIP
14	3420 1197	1			RIVET
15	5600 0369	1			NOZZLE, Washer
16	3420 2025	2			INSERT
17	J368 3219	1			VALVE, Check 1984-85
18	5600 1213	1			HARNESS, w/Hose ***

MODEL CODES

16=Cherokee 2 Dr.(1981-83)
17=Cherokee 2 Dr.(1981-83)
73=Cherokee 2WD-2 Dr.(1984-86)
74=Cherokee 2WD-4 Dr.(1984-86)
18=Cherokee 4 Dr.(1981-83)
77=Cherokee 4WD-2 Dr.(1984-86)
78=Cherokee 4WD-4 Dr.(1984-86)
85=CJ-5 (1981-83)
86=CJ-6(1981)
87=CJ-7(1981-86)
88=CJ-8, Scrambler(1981-86)
64=Comanche 2WD-6 Ft. Box(1986)
66=Comanche 2WD-7 Ft. Box(1986)
63=Comanche 4WD-6 Ft. Box(1986)
65=Comanche 4WD-7 Ft. Box(1986)
15=Grand Wagoneer 4 Dr.(1984-86)
25=J-10 Truck 7 Ft. Box(1981-84)
26=J10 Truck 8 Ft. Box(1981-86)
27=J-20 Truck 8 Ft. Box(1981-86)
15=Wagoneer 4 Dr.(1981-83)
75=Wagoneer 4WD-4 Dr.(1984-86)

BODY
CJ=CJ-5, CJ-6, CJ-7, CJ-8, Scrambler(1981-86)
MJ=Comanche Pickup(1986)

STYLES
SJ=Wagoneer(1981-83), Grand Wagoneer(1984-86), Cherokee(1981-83), J-10, J-20(1981-86)
XJ=Wagoneer(1984-86), Cherokee(1984-86)

AR = Use as Required - = Non Illustrated Part P.A.R. = Paint as Required

« RETURN TO GROUP INDEX

WINSHIELD AND REAR WASHER SYSTEM XJ CHEROKEE WITH DIESEL ENGINE
Figure 23D-800

81J72 800

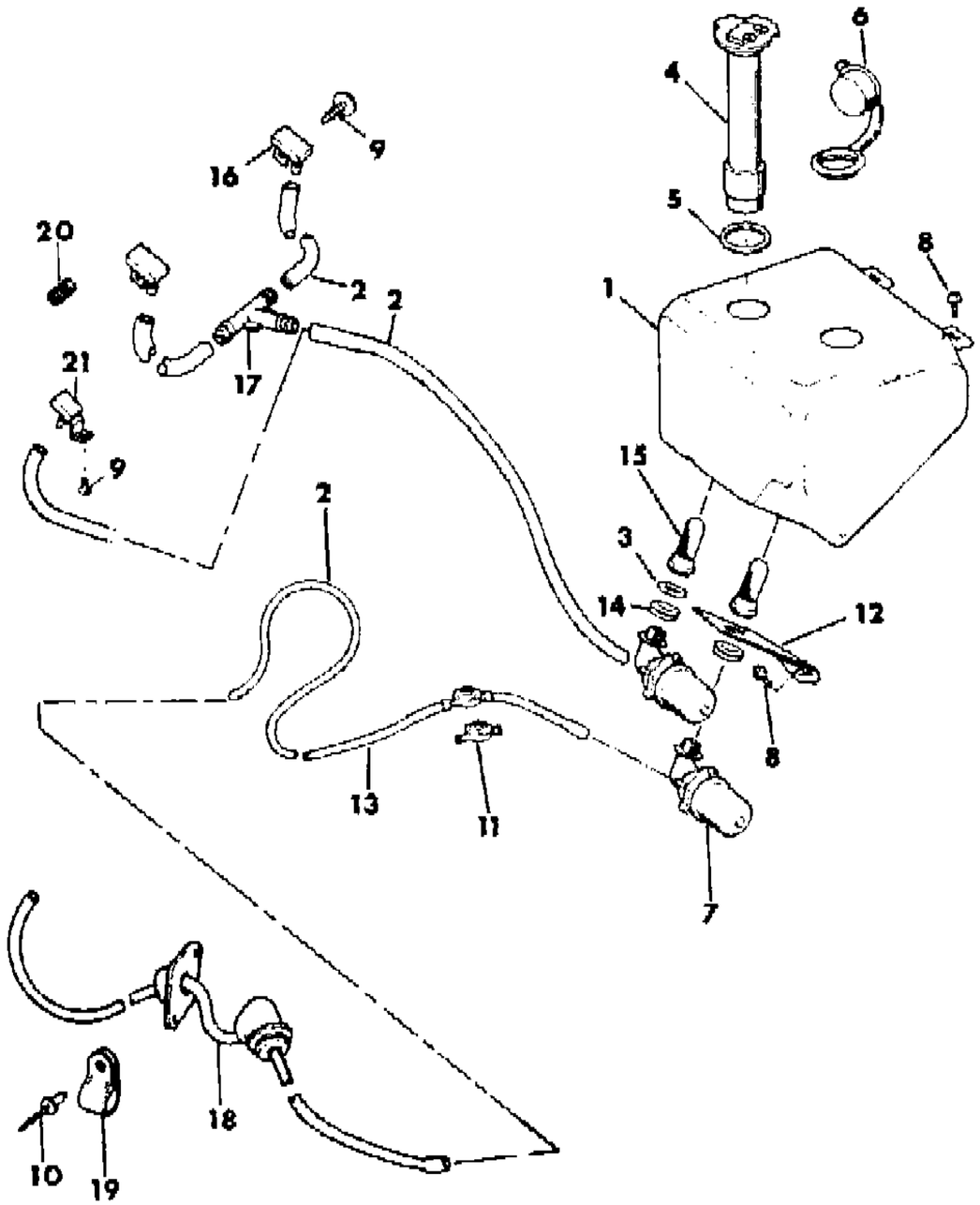

ITEM	PART NUMBER	QTY	BODY	MODEL	DESCRIPTION
1					RESERVOIR
	5600 0875	1			w/Rear Wipe/Wash, w/Sensor
	5600 0867	1			w/o Rear Wipe/Wash, w/o Sensor
2	8350 1071	AR			HOSE
3	5600 0594	1			WASHER
4	5600 0873	1			SENSOR, Fluid
5	5600 0595	1			GASKET, Sensor
6	5600 0699	1			CAP, Reservoir
7	3600 1132	AR			PUMP, Washer
8	3420 1784	3			SCREW
9	3420 1905	3			SCREW
10	3420 1197	1			RIVET
11	J368 3219	1			VALVE, Check
12	5600 0870	1			BRACKET, Reservoir
13	5600 1442	1			HOSE, Rear Washer
14	5600 0592	AR			SEAL, Filter Nut
15	5600 0593	AR			NUT, Filter
16	5600 1601	2			NOZZLE, Washer
17	J321 0891	1			CONNECTOR, Tee
18	5600 1296	1			HOSE, Rear Washer
19	3420 1904	1			CLIP
20	3420 2025	2			INSERT
21	5600 0369	1			NOZZLE, Washer

MODEL CODES

16=Cherokee 2 Dr.(1981-83)
17=Cherokee 2 Dr.(1981-83)
73=Cherokee 2WD-2 Dr.(1984-86)
74=Cherokee 2WD-4 Dr.(1984-86)
18=Cherokee 4 Dr.(1981-83)
77=Cherokee 4WD-2 Dr.(1984-86)
78=Cherokee 4WD-4 Dr.(1984-86)
85=CJ-5 (1981-83)
86=CJ-6(1981)
87=CJ-7(1981-86)
88=CJ-8, Scrambler(1981-86)
64=Comanche 2WD-6 Ft. Box(1986)
66=Comanche 2WD-7 Ft. Box(1986)
63=Comanche 4WD-6 Ft. Box(1986)
65=Comanche 4WD-7 Ft. Box(1986)
15=Grand Wagoneer 4 Dr.(1984-86)
25=J-10 Truck 7 Ft. Box(1981-84)
26=J10 Truck 8 Ft. Box(1981-86)
27=J-20 Truck 8 Ft. Box(1981-86)
15=Wagoneer 4 Dr.(1981-83)
75=Wagoneer 4WD-4 Dr.(1984-86)

BODY
CJ=CJ-5, CJ-6, CJ-7, CJ-8, Scrambler(1981-86)
MJ=Comanche Pickup(1986)

STYLES
SJ=Wagoneer(1981-83), Grand Wagoneer(1984-86), Cherokee(1981-83), J-10, J-20(1981-86)
XJ=Wagoneer(1984-86), Cherokee(1984-86)

AR = Use as Required - = Non Illustrated Part P.A.R. = Paint as Required

« RETURN TO GROUP INDEX

CYLINDERS AND KEYS SJ CHEROKEE, SJ WAGONEER, J10, J20
Figure 23D-900

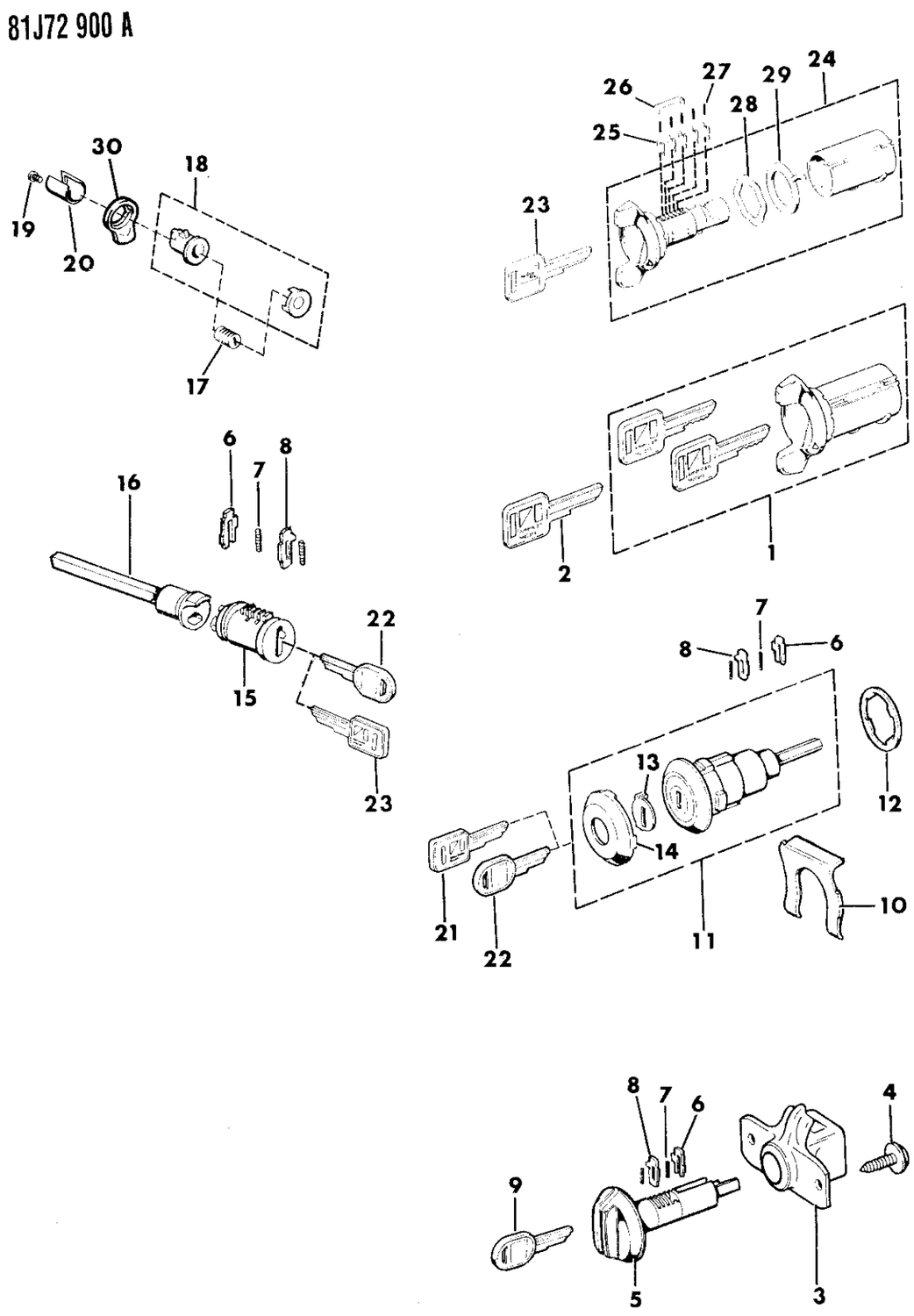

ITEM	PART NUMBER	QTY	BODY	MODEL	DESCRIPTION
1	8350 1971	1			CYLINDER, Ignition Switch Lock, Coded, 1985-86
2	8350 1972	AR			KEY, 1985-86
3	J363 2495	1			HOUSING, Glovebox Lock, 1982-86
4	J448 9486	2			SCREW, 1982-86
5	J812 5764	1			CYLINDER, Glovebox Lock, Uncoded, 1982-86
6	J812 2875	1			RETAINER, Tumbler
7	J812 2881	AR			SPRING
8					TUMBLER ***
	J812 2876	AR			No. 1
	J812 2877	AR			No. 2
	J812 2878	AR			No. 3
	J812 2879	AR			No. 4
	J812 2880	AR			No. 5
9	J364 1913	AR			KEY
10	J098 7269	2			RETAINER, Lock
11	J812 8289	2			CYLINDER, Door Lock, Uncoded
12	J098 7272	2			GASKET
13	J813 3585	2			SHUTTER, Lock ***
14	J812 7677	2			CAP
15					CYLINDER, Tailgate Lock
	8350 5385	1			w/Electric Regulator
	J812 2971	1			w/o Electric Regulator
16	J096 2048	1			SHAFT, Tailgate Cylinder, w/Electric Regulator
17					CYLINDER, Glovebox Lock, Uncoded
	J812 2968	1			1981
	J812 5764	1			1982-86
18	J812 2969	1			BASE, 1981-85
19	J045 0649	1			SCREW
20	J066 4843	1			CUP, 1981-85 ***
21	J364 1914	AR			KEY, 1981-84
22	J364 1913	AR			KEY, 1985-86
23	J364 1914	AR			KEY, 1981-84
24	J812 0081	1			CYLINDER, Ignition Switch Lock, Uncoded, 1981-84
25					TUMBLER, 1981-84 ***
	J448 7670	AR			No. 1
	J448 7671	AR			No. 2
	J448 7672	AR			No. 3
	J448 7673	AR			No. 4
	J448 7674	AR			No. 5

MODEL CODES

16=Cherokee 2 Dr.(1981-83)	78=Cherokee 4WD-4 Dr.(1984-86)	64=Comanche 2WD-6 Ft. Box(1986)	25=J-10 Truck 7 Ft. Box(1981-84)
17=Cherokee 2 Dr.(1981-83)	85=CJ-5 (1981-83)	66=Comanche 2WD-7 Ft. Box(1986)	26=J10 Truck 8 Ft. Box(1981-86)
73=Cherokee 2WD-2 Dr.(1984-86)	86=CJ-6(1981)	63=Comanche 4WD-6 Ft. Box(1986)	27=J-20 Truck 8 Ft. Box(1981-86)
74=Cherokee 2WD-4 Dr.(1984-86)	87=CJ-7(1981-86)	65=Comanche 4WD-7 Ft. Box(1986)	15=Wagoneer 4 Dr.(1981-83)
18=Cherokee 4 Dr.(1981-83)	88=CJ-8, Scrambler(1981-86)	15=Grand Wagoneer 4 Dr.(1984-86)	75=Wagoneer 4WD-4 Dr.(1984-86)
77=Cherokee 4WD-2 Dr.(1984-86)			

BODY
CJ=CJ-5, CJ-6, CJ-7, CJ-8, Scrambler(1981-86)
MJ=Comanche Pickup(1986)

STYLES
SJ=Wagoneer(1981-83), Grand Wagoneer(1984-86), Cherokee(1981-83), J-10, J-20(1981-86)
XJ=Wagoneer(1984-86), Cherokee(1984-86)

AR = Use as Required - = Non Illustrated Part P.A.R. = Paint as Required

« RETURN TO GROUP INDEX »

CYLINDERS AND KEYS SJ CHEROKEE, SJ WAGONEER, J10, J20
Figure 23D-900

81J72 900 A

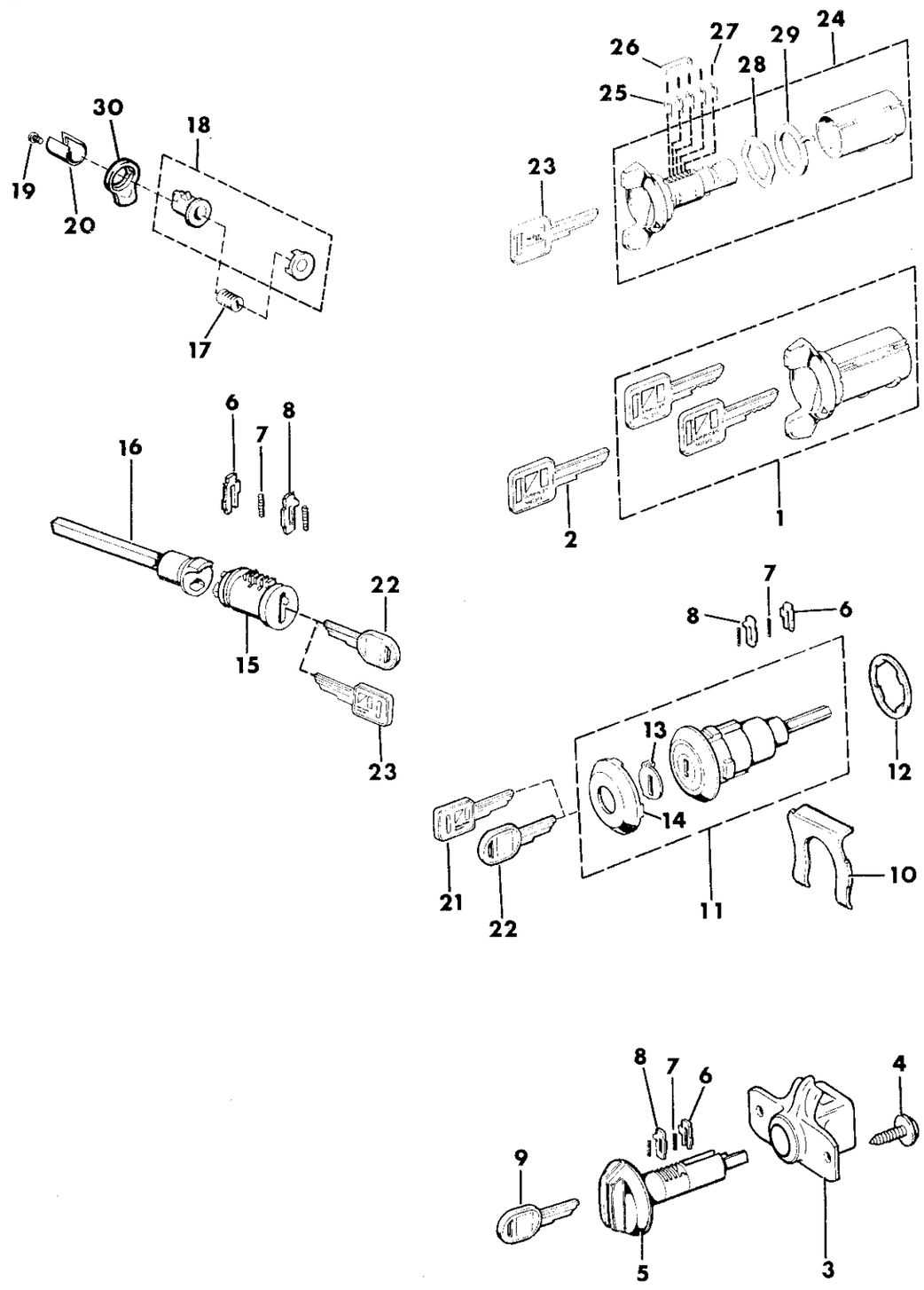

ITEM	PART NUMBER	QTY	BODY	MODEL	DESCRIPTION
26	J448 7675	1			RETAINER, 1981-84
27	J448 7676	5			SPRING, 1981-84
28	J448 7660	1			WASHER, 1981-84
29	J448 7659	1			RING, 1981-84
30					TAB, Glovebox Pull ***
	J546 4382	1			Black
	J546 5778	1			Blue
	J575 5263	1			Brown
	J575 5264	1			Nutmeg
	J546 5779	1			Russet

MODEL CODES

16=Cherokee 2 Dr.(1981-83)	78=Cherokee 4WD-4 Dr.(1984-86)	64=Comanche 2WD-6 Ft. Box(1986)	25=J-10 Truck 7 Ft. Box(1981-84)
17=Cherokee 2 Dr.(1981-83)	85=CJ-5 (1981-83)	66=Comanche 2WD-7 Ft. Box(1986)	26=J10 Truck 8 Ft. Box(1981-86)
73=Cherokee 2WD-2 Dr.(1984-86)	86=CJ-6(1981)	63=Comanche 4WD-6 Ft. Box(1986)	27=J-20 Truck 8 Ft. Box(1981-86)
74=Cherokee 2WD-4 Dr.(1984-86)	87=CJ-7(1981-86)	65=Comanche 4WD-7 Ft. Box(1986)	15=Wagoneer 4 Dr.(1981-83)
18=Cherokee 4 Dr.(1981-83)	88=CJ-8, Scrambler(1981-86)	15=Grand Wagoneer 4 Dr.(1984-86)	75=Wagoneer 4WD-4 Dr.(1984-86)
77=Cherokee 4WD-2 Dr.(1984-86)			

BODY
CJ=CJ-5, CJ-6, CJ-7, CJ-8, Scrambler(1981-86)
MJ=Comanche Pickup(1986)

STYLES
SJ=Wagoneer(1981-83), Grand Wagoneer(1984-86), Cherokee(1981-83), J-10, J-20(1981-86)
XJ=Wagoneer(1984-86), Cherokee(1984-86)

AR = Use as Required - = Non Illustrated Part P.A.R. = Paint as Required

« RETURN TO GROUP INDEX

WINSHIELD WIPER AND WASHER SYSTEM SJ CHEROKEE, SJ WAGONEER, J10, J20
Figure 23D-1000

81J72 1000

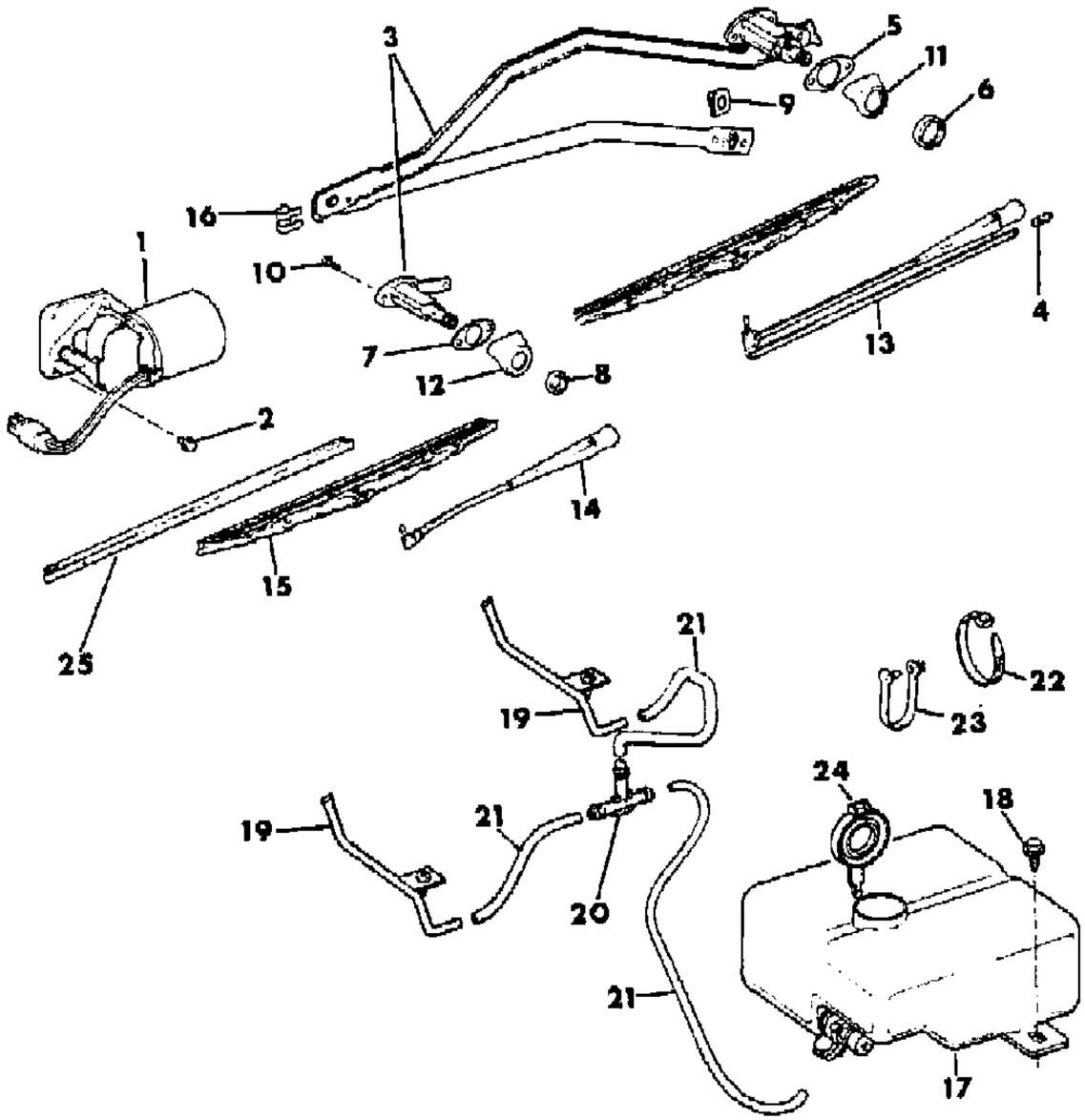

ITEM	PART NUMBER	QTY	BODY	MODEL	DESCRIPTION
1	J575 8467	1			MOTOR, Wiper
2	J400 6455	3			SCREW
3	J575 8474	1			LINKAGE, Wiper ***
	J805 1473	1			Right Hand Drive, Export
4	J812 8491	2			CLIP
5	J546 2415	1			GASKET
6	J400 6450	1			NUT
7	J095 7871	1			GASKET
8	J400 6452	1			NUT
9	J366 5764	1			CLIP
10	J400 6656	4			SCREW
11	J575 1149	1			ESCUTCHEON
12	J575 1144	1			ESCUTCHEON
13	J575 8475	1			ARM, Wiper
14	J575 1155	1			ARM, Wiper
	J805 1299	1			Left, Right Hand Drive, Export
	J805 0449	1			Right, Right Hand Drive, Export
15	J575 1147	2			BLADE, Wiper
16	J095 7868	2			CLIP
17	J545 4940	1			RESERVOIR
18	J400 5466	2			SCREW
19	J545 8180	2			NOZZLE, Washer
20	J321 0891	1			TEE
21	J812 5811	AR			HOSE
22	J322 3227	2			STRAP
23	J400 1712	AR			CLIP, Cable
24	J545 5166	1			CAP, Reservoir
25	J813 3092	2			REFILL, Blade

MODEL CODES

16=Cherokee 2 Dr.(1981-83)
17=Cherokee 2 Dr.(1981-83)
73=Cherokee 2WD-2 Dr.(1984-86)
74=Cherokee 2WD-4 Dr.(1984-86)
18=Cherokee 4 Dr.(1981-83)
77=Cherokee 4WD-2 Dr.(1984-86)
78=Cherokee 4WD-4 Dr.(1984-86)
85=CJ-5 (1981-83)
86=CJ-6(1981)
87=CJ-7(1981-86)
88=CJ-8, Scrambler(1981-86)
64=Comanche 2WD-6 Ft. Box(1986)
66=Comanche 2WD-7 Ft. Box(1986)
63=Comanche 4WD-6 Ft. Box(1986)
65=Comanche 4WD-7 Ft. Box(1986)
15=Grand Wagoneer 4 Dr.(1984-86)
25=J-10 Truck 7 Ft. Box(1981-84)
26=J10 Truck 8 Ft. Box(1981-86)
27=J-20 Truck 8 Ft. Box(1981-86)
15=Wagoneer 4 Dr.(1981-83)
75=Wagoneer 4WD-4 Dr.(1984-86)

BODY
CJ=CJ-5, CJ-6, CJ-7, CJ-8, Scrambler(1981-86)
MJ=Comanche Pickup(1986)

STYLES
SJ=Wagoneer(1981-83), Grand Wagoneer(1984-86), Cherokee(1981-83), J-10, J-20(1981-86)
XJ=Wagoneer(1984-86), Cherokee(1984-86)

AR = Use as Required - = Non Illustrated Part P.A.R. = Paint as Required

« RETURN TO GROUP INDEX

MOTOR COMPONENTS, WINDSHIELD WIPER SJ CHEROKEE, SJ WAGONEER, J10, J20
Figure 23D-1100

81J72 1100

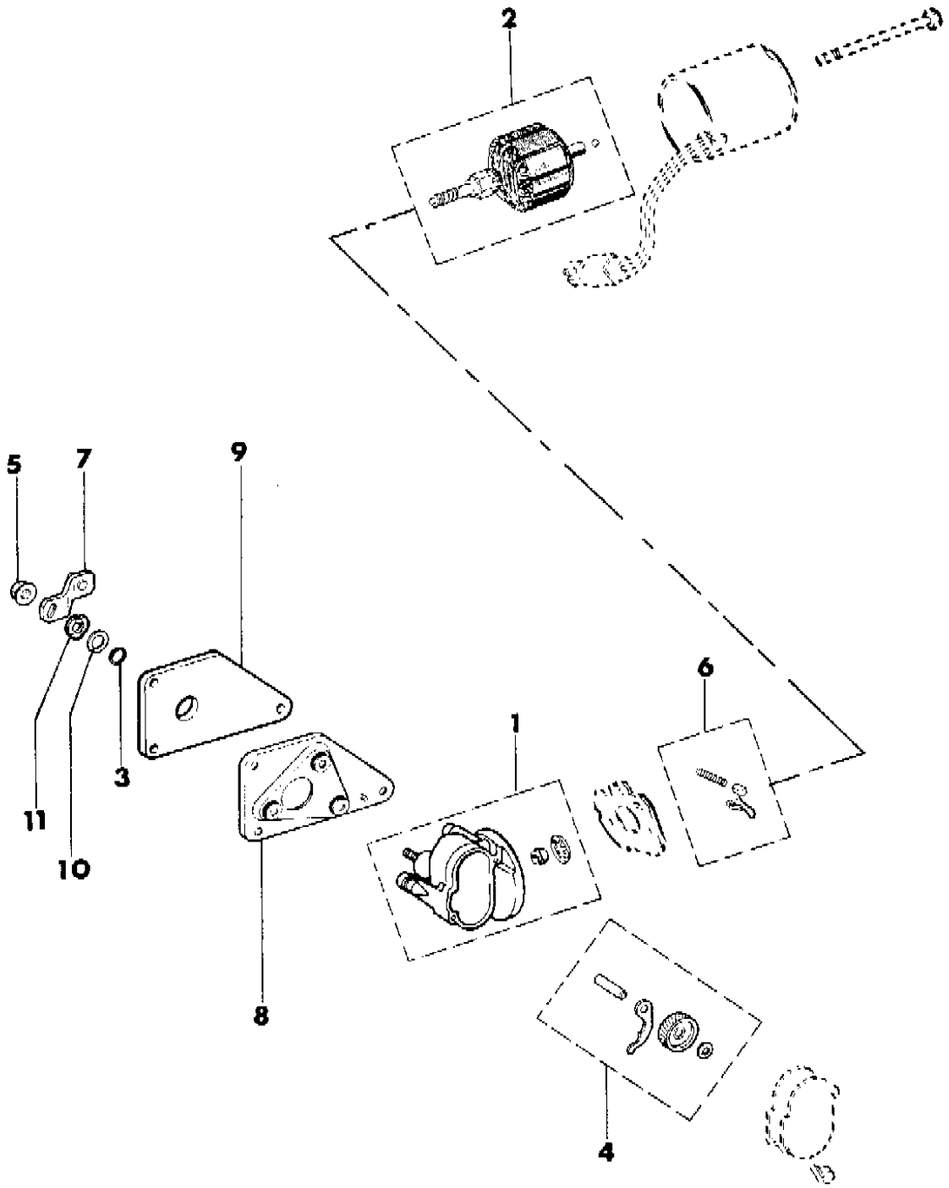

ITEM	PART NUMBER	QTY	BODY	MODEL	DESCRIPTION
1	J812 2833	1			HOUSING, Gear
2	J812 2830	1			ARMATURE, Wiper ***
3	J812 2906	1			SEAL
4	J812 3096	1			GEAR, Motor ***
5	J812 2748	1			NUT
6	J812 2831	1			PACKAGE, Brush
7					ARM, Motor Drive
	J575 8466	1			w/One Piece Linkage, 1981-86
	J546 9999	1			w/Two Piece Linkage, 1981
8	J546 9997	1			BRACKET
9	J546 9998	1			GASKET
10	J812 2750	1			WASHER
11	J812 2749	1			WASHER

MODEL CODES

16=Cherokee 2 Dr.(1981-83)	78=Cherokee 4WD-4 Dr.(1984-86)	64=Comanche 2WD-6 Ft. Box(1986)	25=J-10 Truck 7 Ft. Box(1981-84)
17=Cherokee 2 Dr.(1981-83)	85=CJ-5 (1981-83)	66=Comanche 2WD-7 Ft. Box(1986)	26=J10 Truck 8 Ft. Box(1981-86)
73=Cherokee 2WD-2 Dr.(1984-86)	86=CJ-6(1981)	63=Comanche 4WD-6 Ft. Box(1986)	27=J-20 Truck 8 Ft. Box(1981-86)
74=Cherokee 2WD-4 Dr.(1984-86)	87=CJ-7(1981-86)	65=Comanche 4WD-7 Ft. Box(1986)	15=Wagoneer 4 Dr.(1981-83)
18=Cherokee 4 Dr.(1981-83)	88=CJ-8, Scrambler(1981-86)	15=Grand Wagoneer 4 Dr.(1984-86)	75=Wagoneer 4WD-4 Dr.(1984-86)
77=Cherokee 4WD-2 Dr.(1984-86)			

BODY
CJ=CJ-5, CJ-6, CJ-7, CJ-8, Scrambler(1981-86)
MJ=Comanche Pickup(1986)

STYLES
SJ=Wagoneer(1981-83), Grand Wagoneer(1984-86), Cherokee(1981-83), J-10, J-20(1981-86)
XJ=Wagoneer(1984-86), Cherokee(1984-86)

AR = Use as Required - = Non Illustrated Part P.A.R. = Paint as Required

« RETURN TO GROUP INDEX

Figure 23D-1100

ILLUSTRATION NOT AVAILABLE AT TIME OF PUBLICATION

GROUP 24 - HEATER AND AIR CONDITIONING

ILLUSTRATION TITLE	GROUP-FIG. NO.
CONTROLS, HEATER AND FRESH AIR CJ-5,6,7,8 SCRAMBLER	Fig. 24-100
HEATER ASSEMBLY CJ-5,6,7,8, SCRAMBLER	Fig. 24-200
HOUSING AND CORE, HEATER XJ CHEROKEE, XJ WAGONEER, COMANCHE	Fig. 24-300
CORE AND BLOWER MOTOR, HEATER SJ CHEROKEE, SJ WAGONEER, J10, J20	Fig. 24-400
PLUMBING, HEATER CJ-5,6,7,8, SCRAMBLER	Fig. 24-500
HOSES, HEATER 2.5L GAS ENGINE AND DIESEL ENGINE XJ CHEROKEE, XJ WAGONEER, COMANCHE	Fig. 24-600
HOSES, HEATER SIX CYLINDER ENGINE XJ CHEROKEE, XJ WAGONEER, COMANCHE	Fig. 24-700
HOSES, HEATER SJ CHEROKEE, SJ WAGONEER, J10, J20	Fig. 24-800
CONTROLS, HEATER AND AIR CONDITIONING XJ CHEROKEE, XJ WAGONEER, COMANCHE 1984-85	Fig. 24-900
CONTROLS, HEATER AND AIR CONDITIONING XJ CHEROKEE, XJ WAGONEER, COMANCHE 1986	Fig. 24-1000
CONTROLS, HEATER AND AIR CONDITIONING SJ CHEROKEE, SJ WAGONEER, J10, J20 1981-85	Fig. 24-1100
CONTROLS, HEATER AND AIR CONDITIONING SJ GRAND WAGONEER, J10, J20 1986	Fig. 24-1200
EVAPORATOR AND BLOWER, AIR CONDITIONING CJ-5,6,7,8, SCRAMBLER	Fig. 24-1300
BLOWER MOTOR AND HOUSING HEATER AND AIR CONDITIONING XJ CHEROKEE, XJ WAGONEER, COMANCHE	Fig. 24-1400
CORE, EVAPORATOR XJ CHEROKEE, XJ WAGONEER COMANCHE	Fig. 24-1500
EVAPORATOR AND BLOWER, AIR CONDITIONING SJ CHEROKEE, SJ WAGONEER, J10, J20 1981-85	Fig. 24-1600
EVAPORATOR AND BLOWER, AIR CONDITIONING SJ CHEROKEE, SJ WAGONEER, J10, J20 1986	Fig. 24-1700
EVAPORATOR AND BLOWER, AIR CONDITIONING SJ CHEROKEE, SJ WAGONEER, J10, J20 RIGHT HAND DRIVE	Fig. 24-1800
EVAPORATOR AND BLOWER, AIR CONDITIONING WITH AMERICAN AIR CONDITIONING SJ CHEROKEE, SJ WAGONEER, J10, J20	Fig. 24-1900
RECEIVER/DRIER AND HOSES WITH FACTORY AIR CONDITIONING CJ-5,6,7,8, SCRAMBLER	Fig. 24-2000
RECEIVER/DRIER AND HOSES WITH AMERICAN AIR CONDITIONING CJ-5,6,7,8, SCRAMBLER	Fig. 24-2100
RECEIVER/DRIER AND HOSES 2.5L FOUR AND 2.8L SIX CYLINDER XJ CHEROKEE, XJ WAGONEER, COMANCHE	Fig. 24-2200
RECEIVER/DRIER AND HOSES 2.1L DIESEL XJ CHEROKEE, XJ WAGONEER, COMANCHE	Fig. 24-2300
VACUUM LINES, AIR CONDITIONING XJ CHEROKEE, XJ WAGONEER COMANCHE	Fig. 24-2400
RECEIVER/DRIER AND HOSES WITH FACTORY AIR CONDITIONING SJ CHEROKEE, SJ WAGONEER, J10, J20	Fig. 24-2500
RECEIVER/DRIER AND HOSES WITH AMERICAN AIR CONDITIONING SJ CHEROKEE, SJ WAGONEER, J10, J20	Fig. 24-2600
COMPRESSOR, AIR CONDITIONING SANDEN	Fig. 24-2700
COMPRESSOR, AIR CONDITIONING YORK	Fig. 24-2800
COMPRESSOR MOUNTING FOUR CYLINDER WITH AMERICAN AIR CJ-5,6,7,8, SCRAMBLER	Fig. 24-2900
COMPRESSOR MOUNTING SIX CYLINDER WITH SANDEN FACTORY AIR CJ-5,6,7,8, SCRAMBLER	Fig. 24-3000
COMPRESSOR MOUNTING SIX CYLINDER WITH YORK FACTORY AIR CJ-5,6,7,8, SCRAMBLER	Fig. 24-3100
COMPRESSOR MOUNTING SIX CYLINDER WITH AMERICAN AIR CJ-5,6,7,8, SCRAMBLER	Fig. 24-3200

GROUP 24 - HEATER AND AIR CONDITIONING

ILLUSTRATION TITLE **GROUP-FIG. NO.**

SJ CHEROKEE, SJ WAGONEER, J10, J20 (Continued)

COMPRESSOR MOUNTING EIGHT CYLINDER WITH YORK FACTORY AIR SJ CHEROKEE, SJ WAGONEER, J10, J20 . . . . . Fig. 24-3300
COMPRESSOR MOUNTING EIGHT CYLINDER WITH AMERICAN AIR CJ-5,6,7,8, SCRAMBLER . . . . . Fig. 24-3400
COMPRESSOR MOUNTING FOUR CYLINDER WITH FACTORY AIR XJ CHEROKEE, XJ WAGONEER, COMANCHE . . . . . Fig. 24-3500
COMPRESSOR MOUNTING FOUR CYLINDER OR DIESEL WITH AMERICAN AIR XJ CHEROKEE, XJ WAGONEER, COMANCHE . . . . . Fig. 24-3600
COMPRESSOR MOUNTING SIX CYLINDER WITH FACTORY AIR XJ CHEROKEE, XJ WAGONEER, COMANCHE . . . . . Fig. 24-3700
COMPRESSOR MOUNTING SIX CYLINDER WITH AMERICAN AIR XJ CHEROKEE, XJ WAGONEER, COMANCHE . . . . . Fig. 24-3800
COMPRESSOR MOUNTING DIESEL WITH FACTORY AIR XJ CHEROKEE, XJ WAGONEER, COMANCHE . Fig. 24-3900
COMPRESSOR MOUNTING SIX CYLINDER WITH SANDEN FACTORY AIR SJ CHEROKEE, SJ WAGONEER, J10, J20 . . . . . Fig. 24-4000
COMPRESSOR MOUNTING SIX CYLINDER WITH FACTORY AIR SJ CHEROKEE, SJ WAGONEER, J10, J20 . . . . . Fig. 24-4100
COMPRESSOR MOUNTING SIX CYLINDER WITH AMERICAN AIR SJ CHEROKEE, SJ WAGONEER, J10, J20 . . . . . Fig. 24-4200
COMPRESSOR MOUNTING EIGHT CYLINDER WITH YORK FACTORY AIR SJ CHEROKEE, SJ WAGONEER, J10, J20 . . . . . Fig. 24-4300
COMPRESSOR MOUNTING EIGHT CYLINDER WITH AMERICAN AIR SJ CHEROKEE, SJ WAGONEER, J10, J20 . . . . . Fig. 24-4400
AIR DISTRIBUTION DUCTS CJ-5,6,7,8, SCRAMBLER . . . . . Fig. 24-4500
AIR DISTRIBUTION DUCTS XJ CHEROKEE, XJ WAGONEER COMANCHE . . . . . Fig. 24-4600
AIR DISTRIBUTION DUCTS FRESH AIR SJ CHEROKEE, SJ WAGONEER, J10, J20 . . . . . Fig. 24-4700
AIR DISTRIBUTION DUCTS 1981-85, HEATER AND DEFROSTER SJ CHEROKEE, SJ WAGONEER, J10, J20 . . . . . Fig. 24-4800
AIR DISTRIBUTION DUCTS 1986, HEATER AND DEFROSTER SJ CHEROKEE, SJ WAGONEER, J10 . . . . Fig. 24-4900

CONTROLS, HEATER AND FRESH AIR CJ-5,6,7,8 SCRAMBLER
Figure 24-100

81J24 100

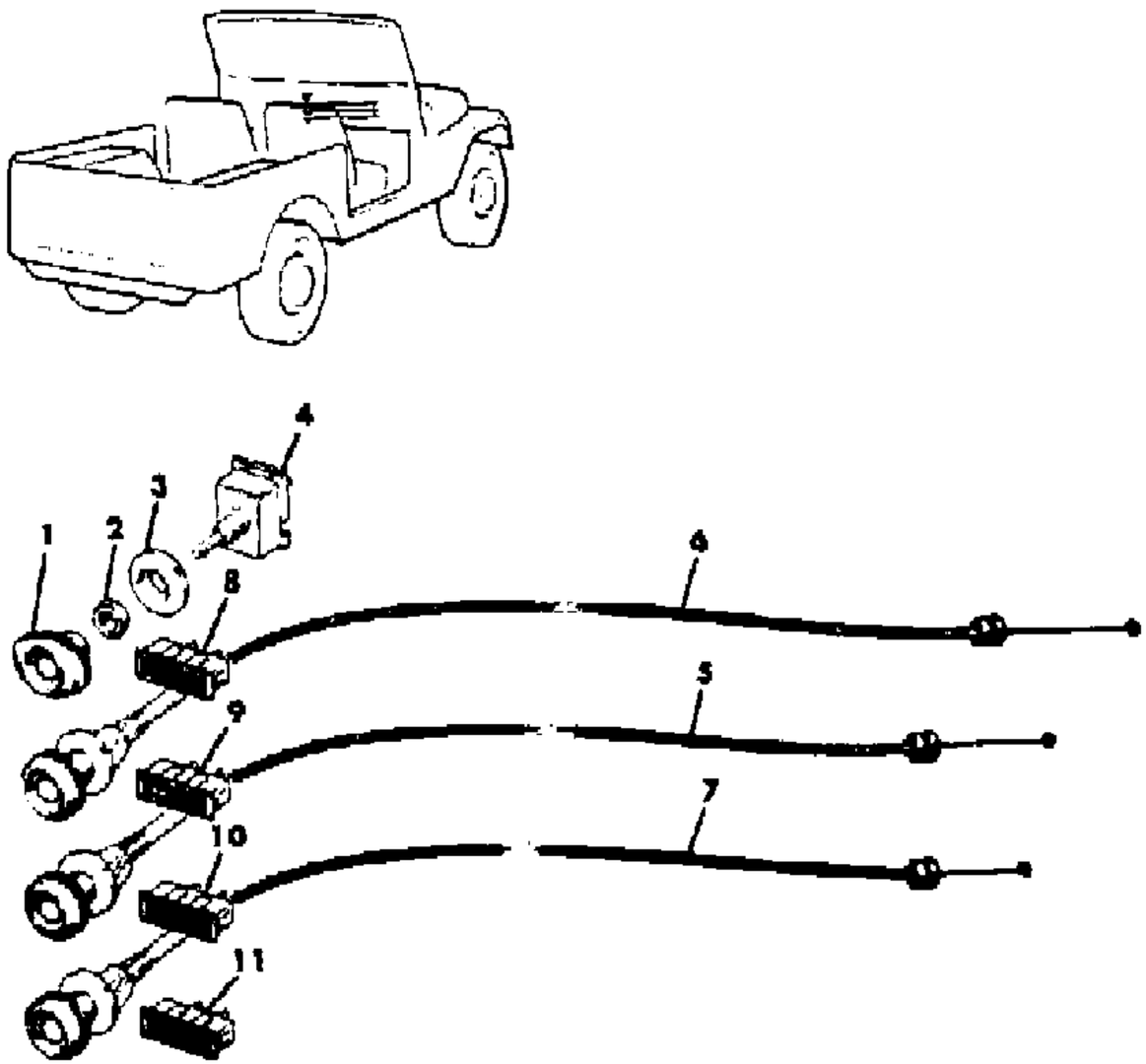

ITEM	PART NUMBER	QTY	BODY	MODEL	DESCRIPTION
1	J545 9189	1			KNOB, Fan Switch
2	J400 0056	1			NUT
3	J098 7911	1			BEZEL
4	J546 2784	1			SWITCH, Fan
5	J546 3656	1			CABLE, Temperature Control
6	J546 3657	1			CABLE, Fresh Air Control
7	J546 3655	1			CABLE, Heater Control
8	J575 2818	1			LAMP, Fan
9	J575 2815	1			LAMP, Air
10	J575 2816	1			LAMP, Temperature
11	J575 2817	1			LAMP, Defroster

MODEL CODES

16=Cherokee 2 Dr.(1981-83)
17=Cherokee 2 Dr.(1981-83)
73=Cherokee 2WD-2 Dr.(1984-86)
74=Cherokee 2WD-4 Dr.(1984-86)
18=Cherokee 4 Dr.(1981-83)
77=Cherokee 4WD-2 Dr.(1984-86)
78=Cherokee 4WD-4 Dr.(1984-86)
85=CJ-5 (1981-83)
86=CJ-6(1981)
87=CJ-7(1981-86)
88=CJ-8, Scrambler(1981-86)
64=Comanche 2WD-6 Ft. Box(1986)
66=Comanche 2WD-7 Ft. Box(1986)
63=Comanche 4WD-6 Ft. Box(1986)
65=Comanche 4WD-7 Ft. Box(1986)
15=Grand Wagoneer 4 Dr.(1984-86)
25=J-10 Truck 7 Ft. Box(1981-84)
26=J10 Truck 8 Ft. Box(1981-86)
27=J-20 Truck 8 Ft. Box(1981-86)
15=Wagoneer 4 Dr.(1981-83)
75=Wagoneer 4WD-4 Dr.(1984-86)

BODY
CJ=CJ-5, CJ-6, CJ-7, CJ-8, Scrambler(1981-86)
MJ=Comanche Pickup(1986)

STYLES
SJ=Wagoneer(1981-83), Grand Wagoneer(1984-86), Cherokee(1981-83), J-10, J-20(1981-86)
XJ=Wagoneer(1984-86), Cherokee(1984-86)

AR = Use as Required - = Non Illustrated Part P.A.R. = Paint as Required

« RETURN TO GROUP INDEX

HEATER ASSEMBLY CJ-5,6,7,8, SCRAMBLER
Figure 24-200

81J24 200

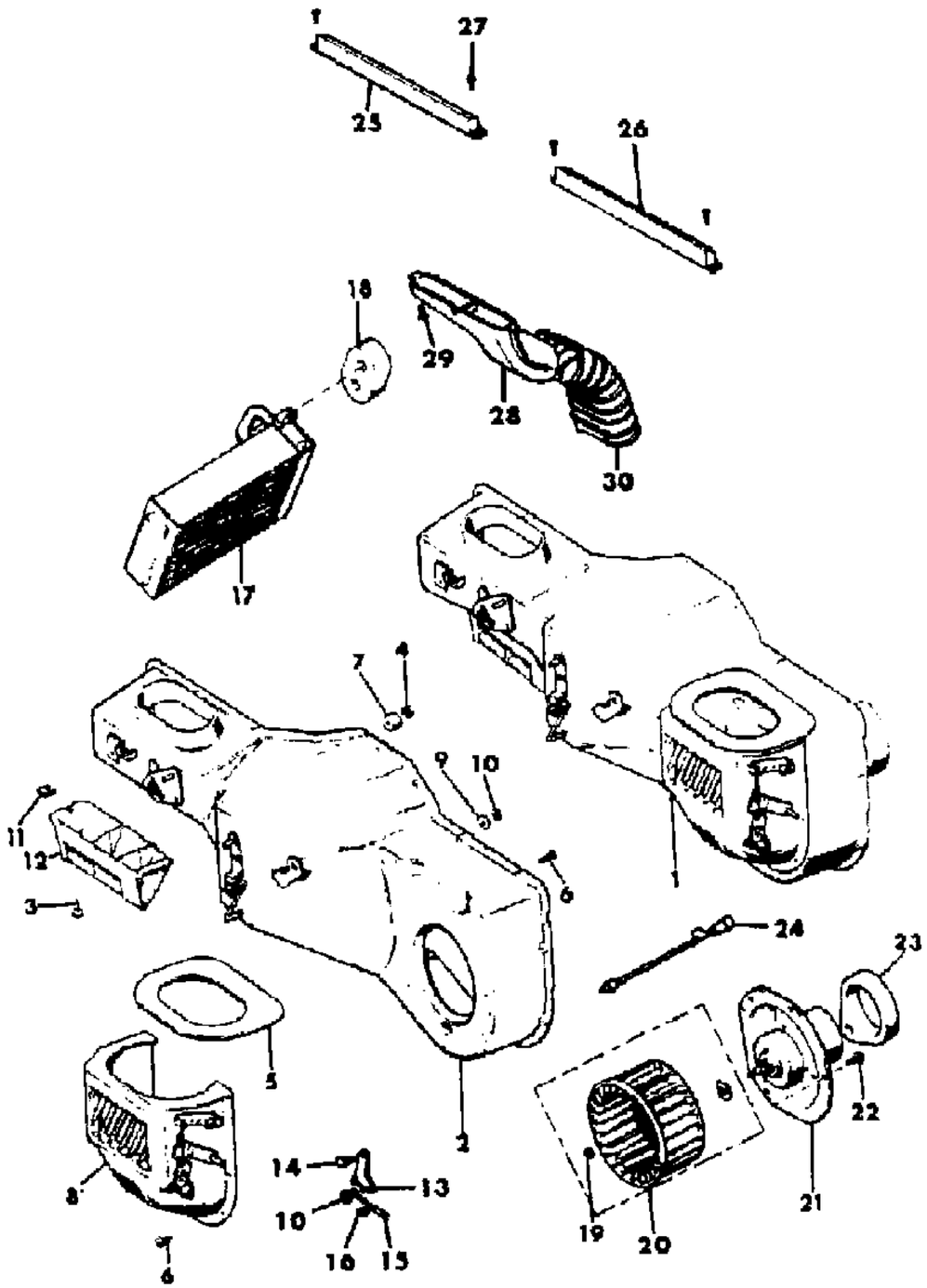

ITEM	PART NUMBER	QTY	BODY	MODEL	DESCRIPTION
1					HEATER ASSEMBLY ***
	J546 9898	1			
	J575 1865	1			EXPORT, Right Hand Drive
2					HOUSING, Heater
	J812 9378	1			
	J813 3800	1			EXPORT, Right Hand Drive
3	J400 2337	1			SCREW
4	J027 1172	4			NUT
5	J546 3794	1			SEAL
6	J400 4566	23			SCREW
7					SPACER
	J546 2713	4			
	J575 1923	4			EXPORT, Right Hand Drive
8					HOUSING, Damper
					With Damper Door
	J813 0000	1			
	J813 3801	1			EXPORT, Right Hand Drive
					Without Damper Door
	J546 2392	1			
	J575 1633	1			EXPORT, Right Hand Drive
9	J400 3089	1			WASHER
10	J400 1714	4			NUT, Push
11	J400 5843	2			U-NUT
12					DEFLECTOR, Air
	J546 1575	1			
	J575 1677	1			EXPORT, Right Hand Drive
13					LINK, Cable
	J546 2743	1			
	J575 1641	1			EXPORT, Right Hand Drive
14	J400 5840	1			BOLT
15	J546 2343	1			CABLE, Temperature Control
16	J400 5844	1			CLIP
17	J546 9877	1			CORE, Heater
18					SEAL, Heater Core Tubes
	J546 2711	1			
	J575 2265	1			EXPORT, Right Hand Drive
19	J420 0306	1			NUT
20					WHEEL, Blower
	J812 2174	1			

MODEL CODES

16=Cherokee 2 Dr.(1981-83)	78=Cherokee 4WD-4 Dr.(1984-86)	64=Comanche 2WD-6 Ft. Box(1986)	25=J-10 Truck 7 Ft. Box(1981-84)
17=Cherokee 2 Dr.(1981-83)	85=CJ-5 (1981-83)	66=Comanche 2WD-7 Ft. Box(1986)	26=J10 Truck 8 Ft. Box(1981-86)
73=Cherokee 2WD-2 Dr.(1984-86)	86=CJ-6(1981)	63=Comanche 4WD-6 Ft. Box(1986)	27=J-20 Truck 8 Ft. Box(1981-86)
74=Cherokee 2WD-4 Dr.(1984-86)	87=CJ-7(1981-86)	65=Comanche 4WD-7 Ft. Box(1986)	15=Wagoneer 4 Dr.(1981-83)
18=Cherokee 4 Dr.(1981-83)	88=CJ-8, Scrambler(1981-86)	15=Grand Wagoneer 4 Dr.(1984-86)	75=Wagoneer 4WD-4 Dr.(1984-86)
77=Cherokee 4WD-2 Dr.(1984-86)			

BODY
CJ=CJ-5, CJ-6, CJ-7, CJ-8, Scrambler(1981-86)
MJ=Comanche Pickup(1986)

STYLES
SJ=Wagoneer(1981-83), Grand Wagoneer(1984-86), Cherokee(1981-83), J-10, J-20(1981-86)
XJ=Wagoneer(1984-86), Cherokee(1984-86)

AR = Use as Required - = Non Illustrated Part P.A.R. = Paint as Required

HEATER ASSEMBLY CJ-5,6,7,8, SCRAMBLER
Figure 24-200

81J24 200

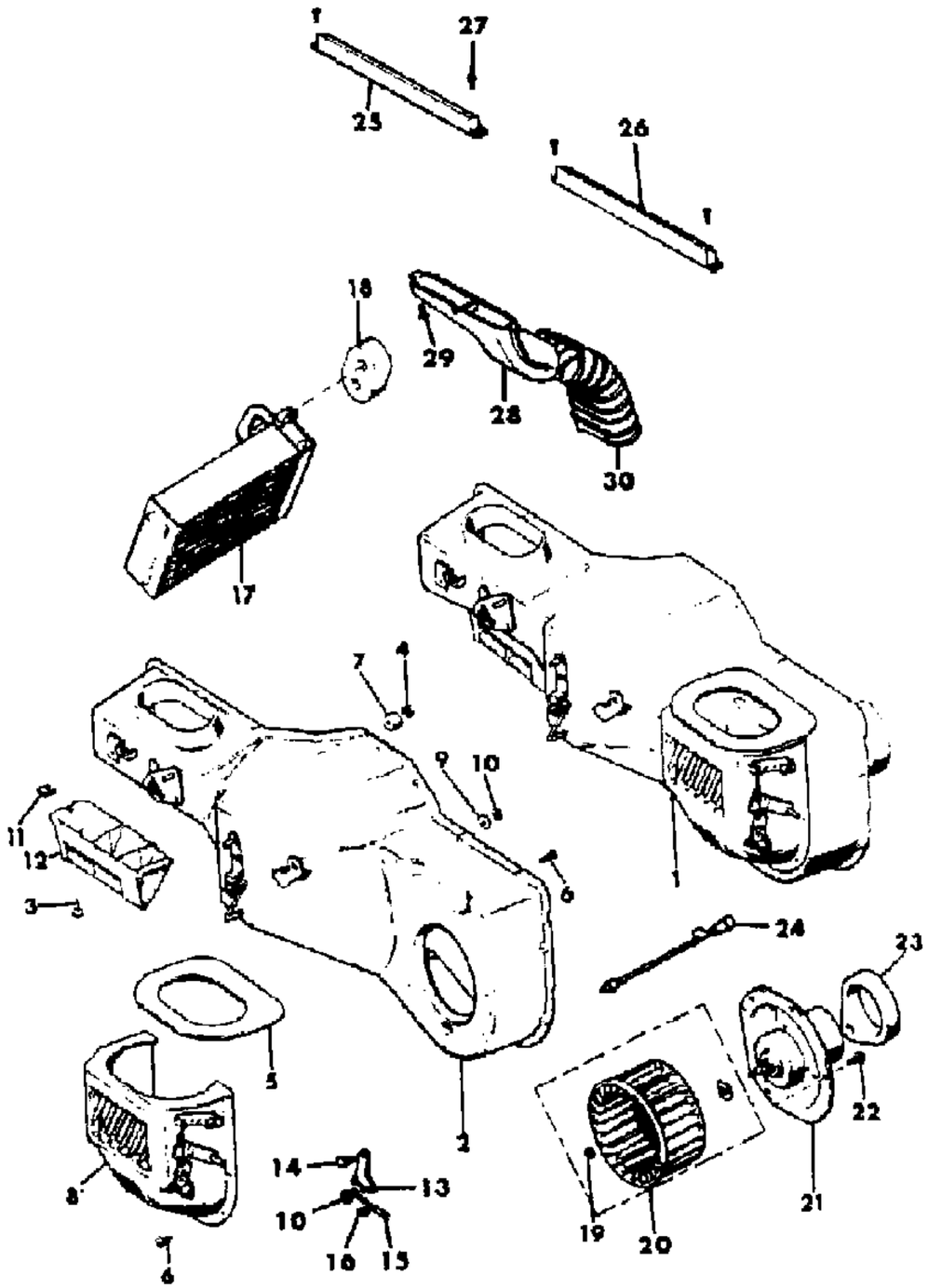

ITEM	PART NUMBER	QTY	BODY	MODEL	DESCRIPTION
	J575 1258	1			EXPORT, Right Hand Drive
21					MOTOR, Blower
	J575 1827	1			
	J575 1244	1			EXPORT, Right Hand Drive
22	J812 0054	5			SCREW
23					SEAL
	J546 2710	1			
	J575 1919	1			EXPORT, Right Hand Drive
24					WIRE, Blower Feed
	J575 1903	1			EXPORT, Right Hand Drive
25	J575 0339	1			DEFLECTOR, Left Defroster
26	J575 0340	1			DEFLECTOR, Right Defroster
27	J812 0052	4			SCREW
28					DUCT, Defroster
	J546 1591	1			
	J575 1608	1			EXPORT, Right Hand Drive
29	S016 1895	2			SCREW
30	J546 2328	1			HOSE, Defroster

MODEL CODES

16=Cherokee 2 Dr.(1981-83)
17=Cherokee 2 Dr.(1981-83)
73=Cherokee 2WD-2 Dr.(1984-86)
74=Cherokee 2WD-4 Dr.(1984-86)
18=Cherokee 4 Dr.(1981-83)
77=Cherokee 4WD-2 Dr.(1984-86)
78=Cherokee 4WD-4 Dr.(1984-86)
85=CJ-5 (1981-83)
86=CJ-6(1981)
87=CJ-7(1981-86)
88=CJ-8, Scrambler(1981-86)
64=Comanche 2WD-6 Ft. Box(1986)
66=Comanche 2WD-7 Ft. Box(1986)
63=Comanche 4WD-6 Ft. Box(1986)
65=Comanche 4WD-7 Ft. Box(1986)
15=Grand Wagoneer 4 Dr.(1984-86)
25=J-10 Truck 7 Ft. Box(1981-84)
26=J10 Truck 8 Ft. Box(1981-86)
27=J-20 Truck 8 Ft. Box(1981-86)
15=Wagoneer 4 Dr.(1981-83)
75=Wagoneer 4WD-4 Dr.(1984-86)

BODY
CJ=CJ-5, CJ-6, CJ-7, CJ-8, Scrambler(1981-86)
MJ=Comanche Pickup(1986)

STYLES
SJ=Wagoneer(1981-83), Grand Wagoneer(1984-86), Cherokee(1981-83), J-10, J-20(1981-86)
XJ=Wagoneer(1984-86), Cherokee(1984-86)

AR = Use as Required - = Non Illustrated Part P.A.R. = Paint as Required

« RETURN TO GROUP INDEX

HOUSING AND CORE, HEATER XJ CHEROKEE, XJ WAGONEER, COMANCHE
Figure 24-300

81J24 300

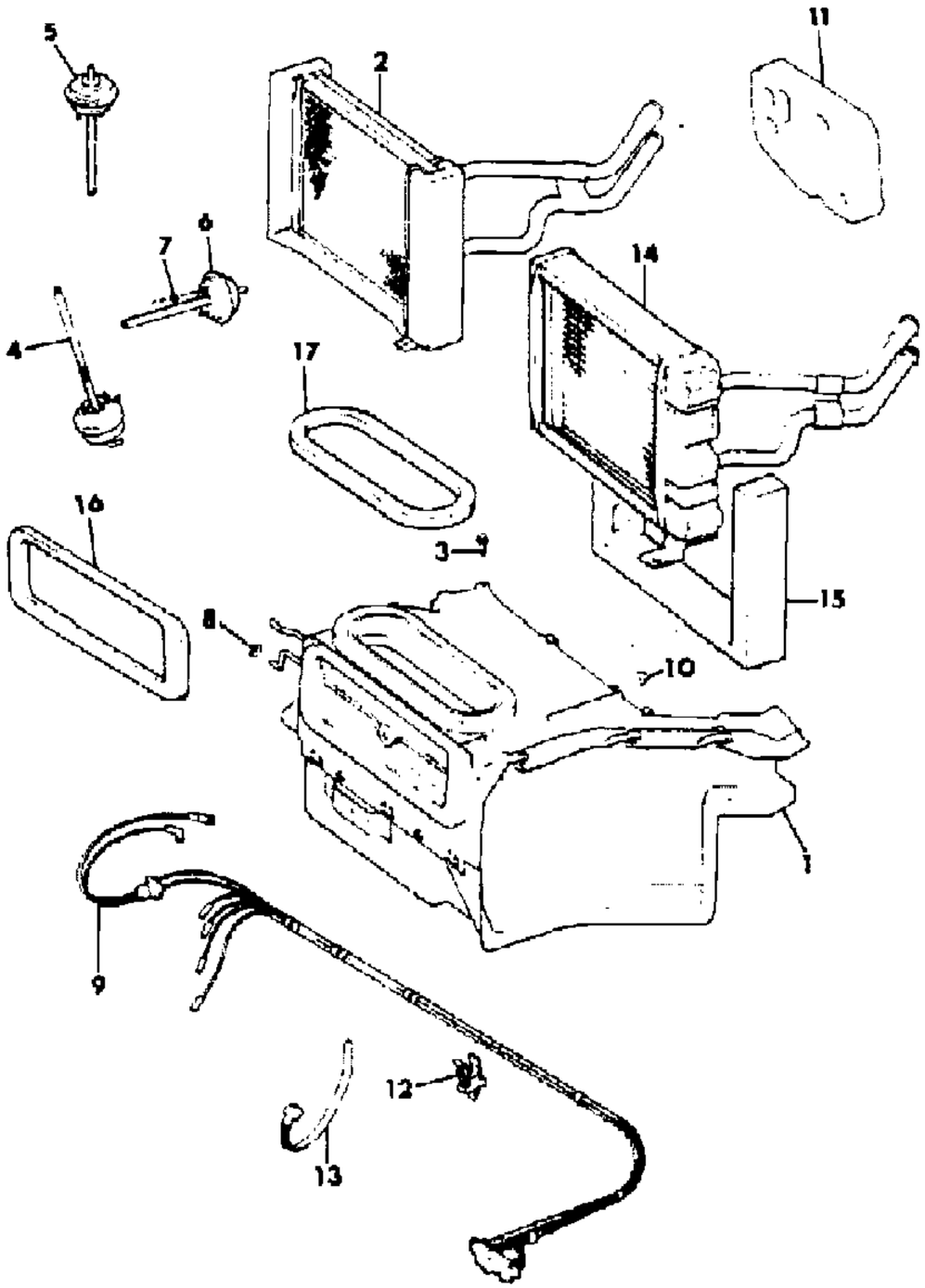

ITEM	PART NUMBER	QTY	BODY	MODEL	DESCRIPTION
1					HOUSING, Heater
	8350 0959	1			With Air Conditioning
	8350 0957	1			Without Air Conditioning
2					CORE, Heater
	5600 0049	1			With Gas Engine
3	3420 1366	3			SCREW
4	5600 0043	1			MOTOR, Heater Vacuum
5	5600 0044	1			MOTOR, Heater Vacuum
6	5600 0198	1			MOTOR, Heater Vacuum
7	3420 1001	AR			NUT
8	J400 0369	AR			NUT, Push
9					HOSE ASSEMBLY, Vacuum ***
					With Air Conditioning
	5600 0244	1			1984
	5600 1252	1			1985
	5600 1771	1			1986
					Without Air Conditioning
	5600 0243	1			1984
	5600 1251	1			1985
	5600 1772	1			1986
10	3420 1358	2			NUT
11					SEAL
					Without Air Conditioning
	5600 0180	1			1984
	5600 1268	1			1985-86
12	5600 1280	1			CLIP
13	J322 3227	1			STRAP
14					CORE, Heater
	5600 1321	1			With Diesel Engine
15					SEAL, Heater Core
	5600 1322	1			With Diesel Engine
16	5600 0533	1			SEAL
17	5600 0513	1			SEAL

MODEL CODES
16=Cherokee 2 Dr.(1981-83)
17=Cherokee 2 Dr.(1981-83)
73=Cherokee 2WD-2 Dr.(1984-86)
74=Cherokee 2WD-4 Dr.(1984-86)
18=Cherokee 4 Dr.(1981-83)
77=Cherokee 4WD-2 Dr.(1984-86)
78=Cherokee 4WD-4 Dr.(1984-86)
85=CJ-5 (1981-83)
86=CJ-6(1981)
87=CJ-7(1981-86)
88=CJ-8, Scrambler(1981-86)
64=Comanche 2WD-6 Ft. Box(1986)
66=Comanche 2WD-7 Ft. Box(1986)
63=Comanche 4WD-6 Ft. Box(1986)
65=Comanche 4WD-7 Ft. Box(1986)
15=Grand Wagoneer 4 Dr.(1984-86)
25=J-10 Truck 7 Ft. Box(1981-84)
26=J10 Truck 8 Ft. Box(1981-86)
27=J-20 Truck 8 Ft. Box(1981-86)
15=Wagoneer 4 Dr.(1981-83)
75=Wagoneer 4WD-4 Dr.(1984-86)

BODY
CJ=CJ-5, CJ-6, CJ-7, CJ-8, Scrambler(1981-86)
MJ=Comanche Pickup(1986)

STYLES
SJ=Wagoneer(1981-83), Grand Wagoneer(1984-86), Cherokee(1981-83), J-10, J-20(1981-86)
XJ=Wagoneer(1984-86), Cherokee(1984-86)

AR = Use as Required - = Non Illustrated Part P.A.R. = Paint as Required

« RETURN TO GROUP INDEX

CORE AND BLOWER MOTOR, HEATER SJ CHEROKEE, SJ WAGONEER, J10, J20
Figure 24-400

81J24 400

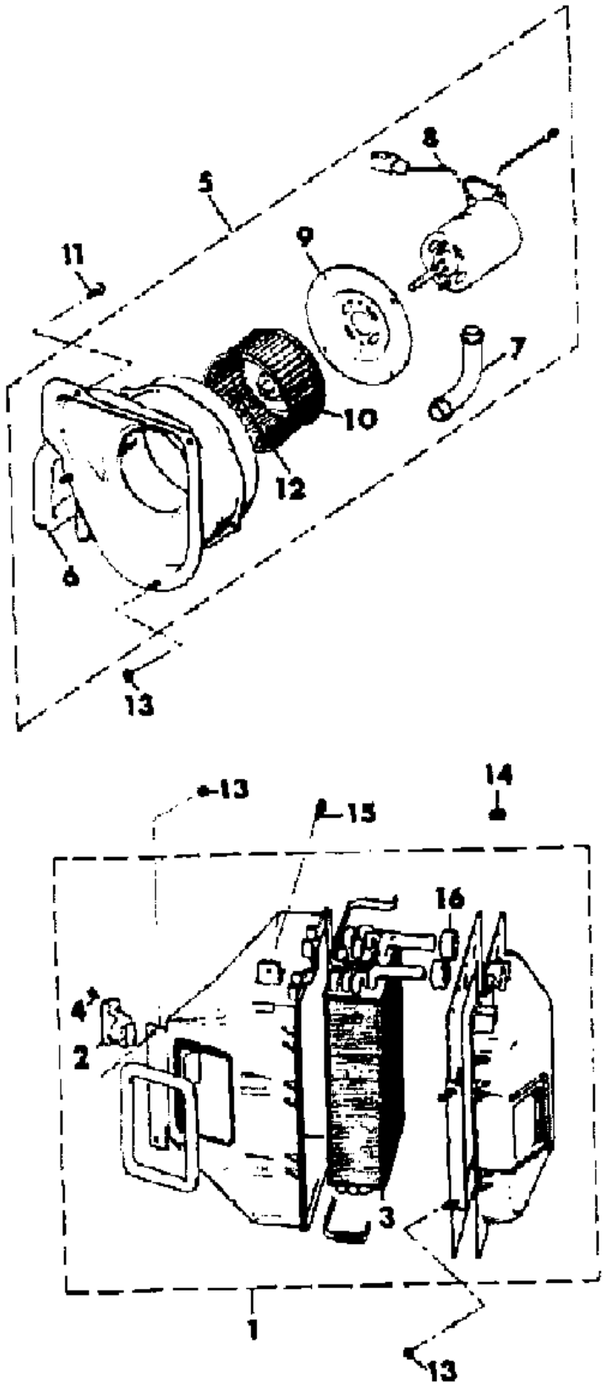

ITEM	PART NUMBER	QTY	BODY	MODEL	DESCRIPTION
1					HEATER ASSEMBLY ***
	J546 4396	1			1981-85
	5600 1493	1			1986
2					RESISTOR
	J096 1042	1			1981-85
	5600 1516	1			1986
3	J812 8784	1			CORE, Heater
4	J812 0054	2			SCREW
5	J546 4398	1			BLOWER ASSEMBLY, Heater ***
6	J546 4395	1			GASKET
7	J322 0580	1			TUBE, Cooling
8	J812 8778	1			MOTOR, Blower
9	J546 4439	1			PLATE
10					WHEEL, Blower
	J322 0588	1			
	J805 1106	1			EXPORT, Right Hand Drive
11	J942 3952	2			SCREW
12					CLAMP
	J093 4246	1			
	J318 0753	1			EXPORT, Right Hand Drive
13	J027 1172	AR			NUT
14	J400 6866	1			NUT, Push
15	J812 0052	AR			SCREW
16	J546 4422	2			SEAL

MODEL CODES

16=Cherokee 2 Dr.(1981-83)
17=Cherokee 2 Dr.(1981-83)
73=Cherokee 2WD-2 Dr.(1984-86)
74=Cherokee 2WD-4 Dr.(1984-86)
18=Cherokee 4 Dr.(1981-83)
77=Cherokee 4WD-2 Dr.(1984-86)
78=Cherokee 4WD-4 Dr.(1984-86)
85=CJ-5 (1981-83)
86=CJ-6(1981)
87=CJ-7(1981-86)
88=CJ-8, Scrambler(1981-86)
64=Comanche 2WD-6 Ft. Box(1986)
66=Comanche 2WD-7 Ft. Box(1986)
63=Comanche 4WD-6 Ft. Box(1986)
65=Comanche 4WD-7 Ft. Box(1986)
15=Grand Wagoneer 4 Dr.(1984-86)
25=J-10 Truck 7 Ft. Box(1981-84)
26=J10 Truck 8 Ft. Box(1981-86)
27=J-20 Truck 8 Ft. Box(1981-86)
15=Wagoneer 4 Dr.(1981-83)
75=Wagoneer 4WD-4 Dr.(1984-86)

BODY
CJ=CJ-5, CJ-6, CJ-7, CJ-8, Scrambler(1981-86)
MJ=Comanche Pickup(1986)

STYLES
SJ=Wagoneer(1981-83), Grand Wagoneer(1984-86), Cherokee(1981-83), J-10, J-20(1981-86)
XJ=Wagoneer(1984-86), Cherokee(1984-86)

AR = Use as Required - = Non Illustrated Part P.A.R. = Paint as Required

« RETURN TO GROUP INDEX

PLUMBING, HEATER CJ-5,6,7,8, SCRAMBLER
Figure 24-500

81J24 500

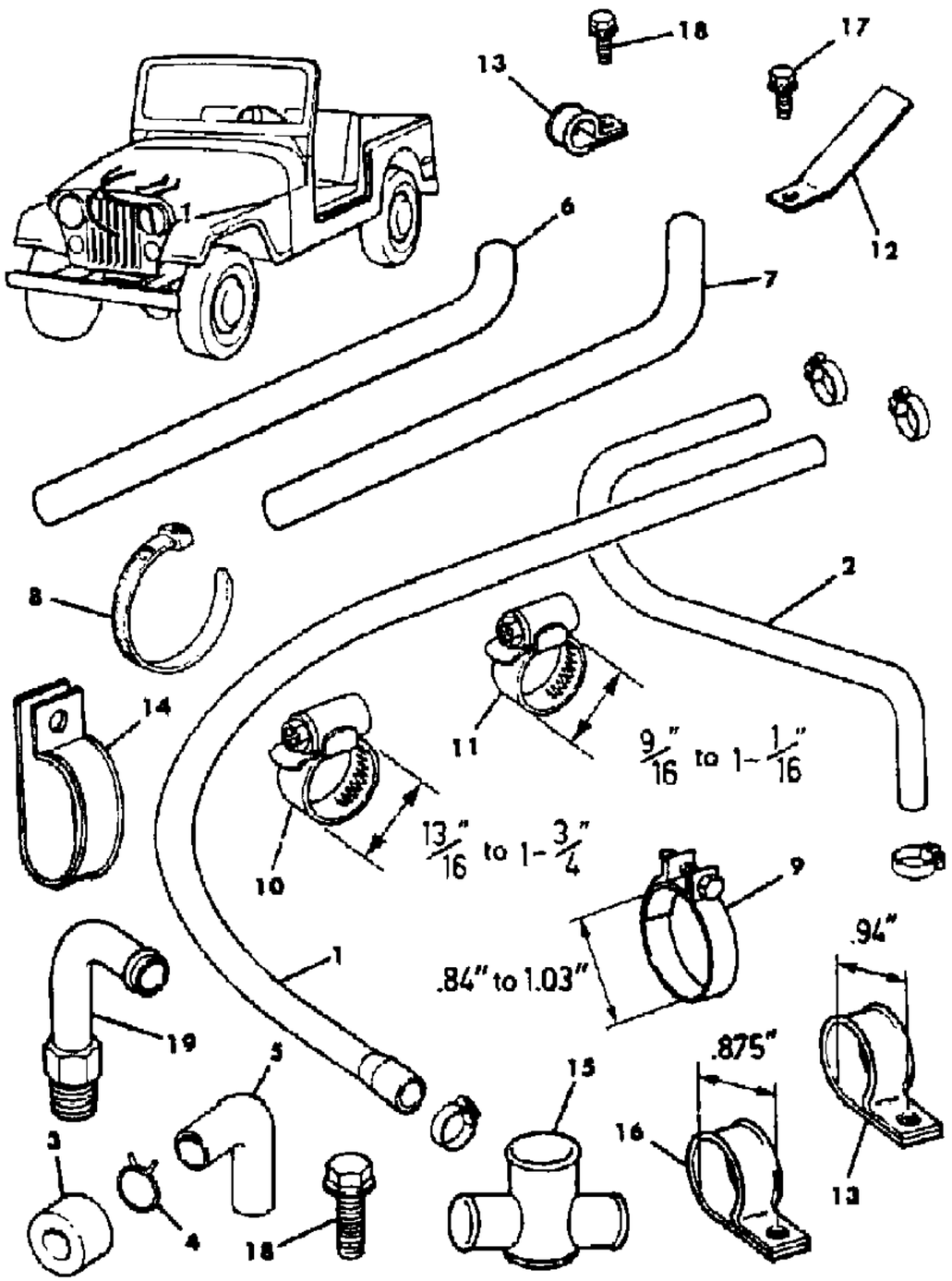

ITEM	PART NUMBER	QTY	BODY	MODEL	DESCRIPTION
1					HOSE, Heater Core to Pump
					Left Hand Drive
					Four Cylinder
	J575 8854	1			1981-82
	J576 4670	1			1983-86
					Six Cylinder
	J545 7913	1			1981-82
	J576 4087	1			1983-86
	J545 5250	1			Eight Cylinder
	J066 9731	1			Diesel
					EXPORT, Right Hand Drive
					Four Cylinder
	J575 8855	1			1981-83
	J576 4673	1			1984-86
	J575 7913	1			Six Cylinder
	J320 3739	1			Diesel, Bulk Hose
2					HOSE, Manifold to Heater Core
					Left Hand Drive
					Four Cylinder
	J320 3739	1			1981-82: Bulk Hose
	J576 4195	1			1983-86
					Six Cylinder
	J320 3739	1			1981-83: Bulk Hose
	J576 4195	1			1984-86
	J320 3739	1			Eight Cylinder, Bulk Hose
	J320 3739	1			Diesel, Bulk Hose
					EXPORT, Right Hand Drive
					Four Cylinder
	J320 3739	1			1981-83: Bulk Hose
	J576 4657	1			1984-86
	J320 3739	1			Six Cylinder, Bulk Hose
	J320 3739	1			Diesel, Bulk Hose
3					SEAL
	J546 2712	1			
	J575 1921	1			EXPORT, Right Hand Drive
4	S027 2844	1			CLAMP
5					HOSE, Heater Drain
	J546 3814	1			
	J575 2356	1			EXPORT, Right Hand Drive

MODEL CODES

16=Cherokee 2 Dr.(1981-83)
17=Cherokee 2 Dr.(1981-83)
73=Cherokee 2WD-2 Dr.(1984-86)
74=Cherokee 2WD-4 Dr.(1984-86)
18=Cherokee 4 Dr.(1981-83)
77=Cherokee 4WD-2 Dr.(1984-86)
78=Cherokee 4WD-4 Dr.(1984-86)
85=CJ-5 (1981-83)
86=CJ-6(1981)
87=CJ-7(1981-86)
88=CJ-8, Scrambler(1981-86)
64=Comanche 2WD-6 Ft. Box(1986)
66=Comanche 2WD-7 Ft. Box(1986)
63=Comanche 4WD-6 Ft. Box(1986)
65=Comanche 4WD-7 Ft. Box(1986)
15=Grand Wagoneer 4 Dr.(1984-86)
25=J-10 Truck 7 Ft. Box(1981-84)
26=J10 Truck 8 Ft. Box(1981-86)
27=J-20 Truck 8 Ft. Box(1981-86)
15=Wagoneer 4 Dr.(1981-83)
75=Wagoneer 4WD-4 Dr.(1984-86)

BODY
CJ=CJ-5, CJ-6, CJ-7, CJ-8, Scrambler(1981-86)
MJ=Comanche Pickup(1986)

STYLES
SJ=Wagoneer(1981-83), Grand Wagoneer(1984-86), Cherokee(1981-83), J-10, J-20(1981-86)
XJ=Wagoneer(1984-86), Cherokee(1984-86)

AR = Use as Required - = Non Illustrated Part P.A.R. = Paint as Required

PLUMBING, HEATER CJ-5,6,7,8, SCRAMBLER
Figure 24-500

81J24 500

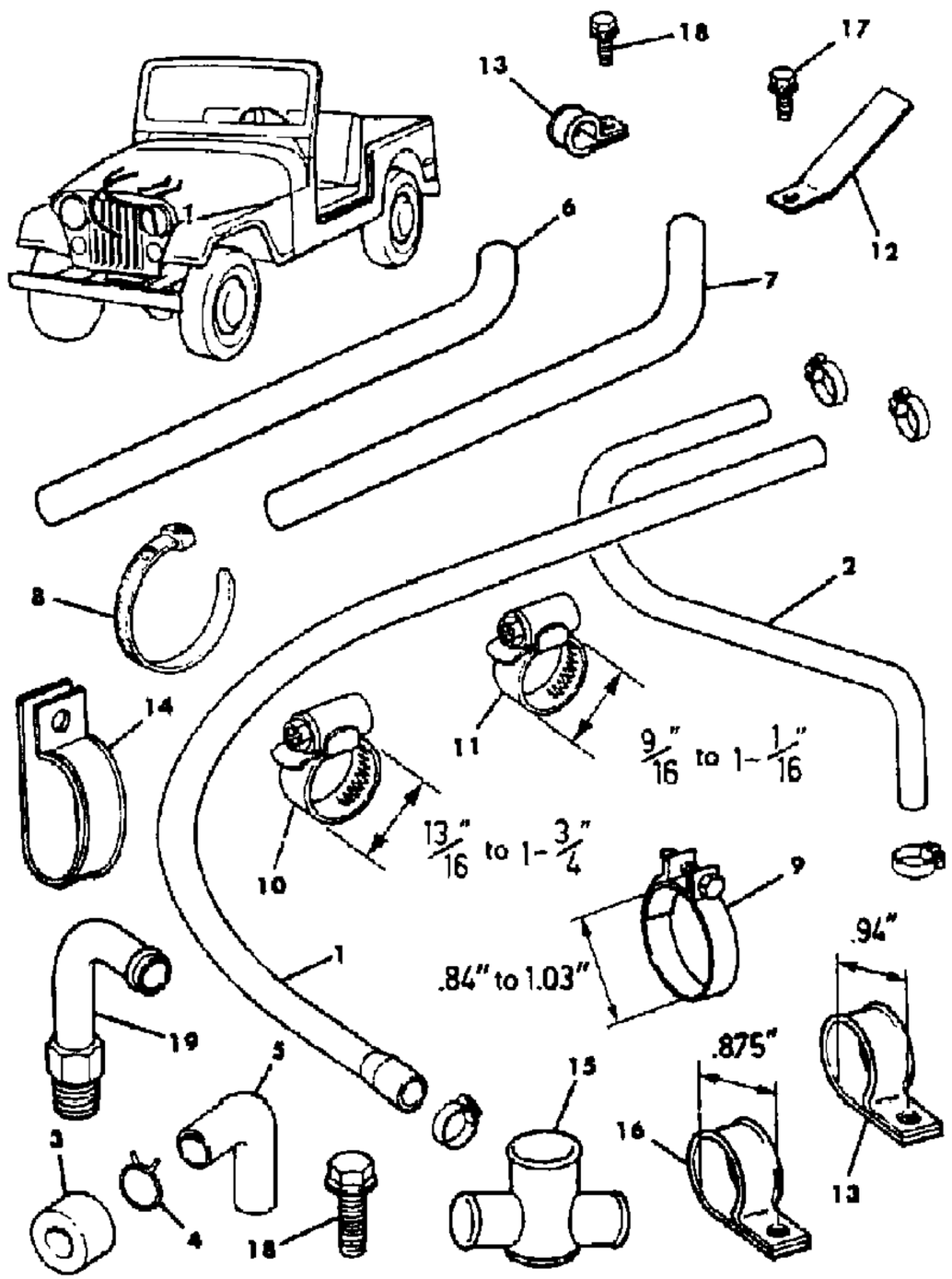

ITEM	PART NUMBER	QTY	BODY	MODEL	DESCRIPTION
6					HOSE, CTO
	J324 0602	1			1981: Six Cylinder, California
7	J372 8191	1			HOSE, Thermostat to Manifold
8	J322 3227	1			STRAP
9	S044 3632	1			CLAMP
10	J320 3077	1			CLAMP
11	J320 3076	1			CLAMP
12	J576 4086	1			BRACKET
13	J400 3838	1			CLIP
14	J546 0142	1			BRACKET
15					TUBE ASSEMBLY, CTO ***
	J372 8089	1			Six Cylinder, California
16	S012 0530	1			CLAMP
17	J400 1701	1			SCREW
18	J400 1814	1			SCREW
19					NIPPLE, Manifold
	J321 9631	1			Eight Cylinder

MODEL CODES

16=Cherokee 2 Dr.(1981-83)
17=Cherokee 2 Dr.(1981-83)
73=Cherokee 2WD-2 Dr.(1984-86)
74=Cherokee 2WD-4 Dr.(1984-86)
18=Cherokee 4 Dr.(1981-83)
77=Cherokee 4WD-2 Dr.(1984-86)
78=Cherokee 4WD-4 Dr.(1984-86)
85=CJ-5 (1981-83)
86=CJ-6(1981)
87=CJ-7(1981-86)
88=CJ-8, Scrambler(1981-86)
64=Comanche 2WD-6 Ft. Box(1986)
66=Comanche 2WD-7 Ft. Box(1986)
63=Comanche 4WD-6 Ft. Box(1986)
65=Comanche 4WD-7 Ft. Box(1986)
15=Grand Wagoneer 4 Dr.(1984-86)
25=J-10 Truck 7 Ft. Box(1981-84)
26=J10 Truck 8 Ft. Box(1981-86)
27=J-20 Truck 8 Ft. Box(1981-86)
15=Wagoneer 4 Dr.(1981-83)
75=Wagoneer 4WD-4 Dr.(1984-86)

BODY
CJ=CJ-5, CJ-6, CJ-7, CJ-8, Scrambler(1981-86)
MJ=Comanche Pickup(1986)

STYLES
SJ=Wagoneer(1981-83), Grand Wagoneer(1984-86), Cherokee(1981-83), J-10, J-20(1981-86)
XJ=Wagoneer(1984-86), Cherokee(1984-86)

AR = Use as Required - = Non Illustrated Part P.A.R. = Paint as Required

« RETURN TO GROUP INDEX

HOSES, HEATER 2.5L GAS ENGINE AND DIESEL ENGINE XJ CHEROKEE, XJ WAGONEER, COMANCHE
Figure 24-600

81J24 600

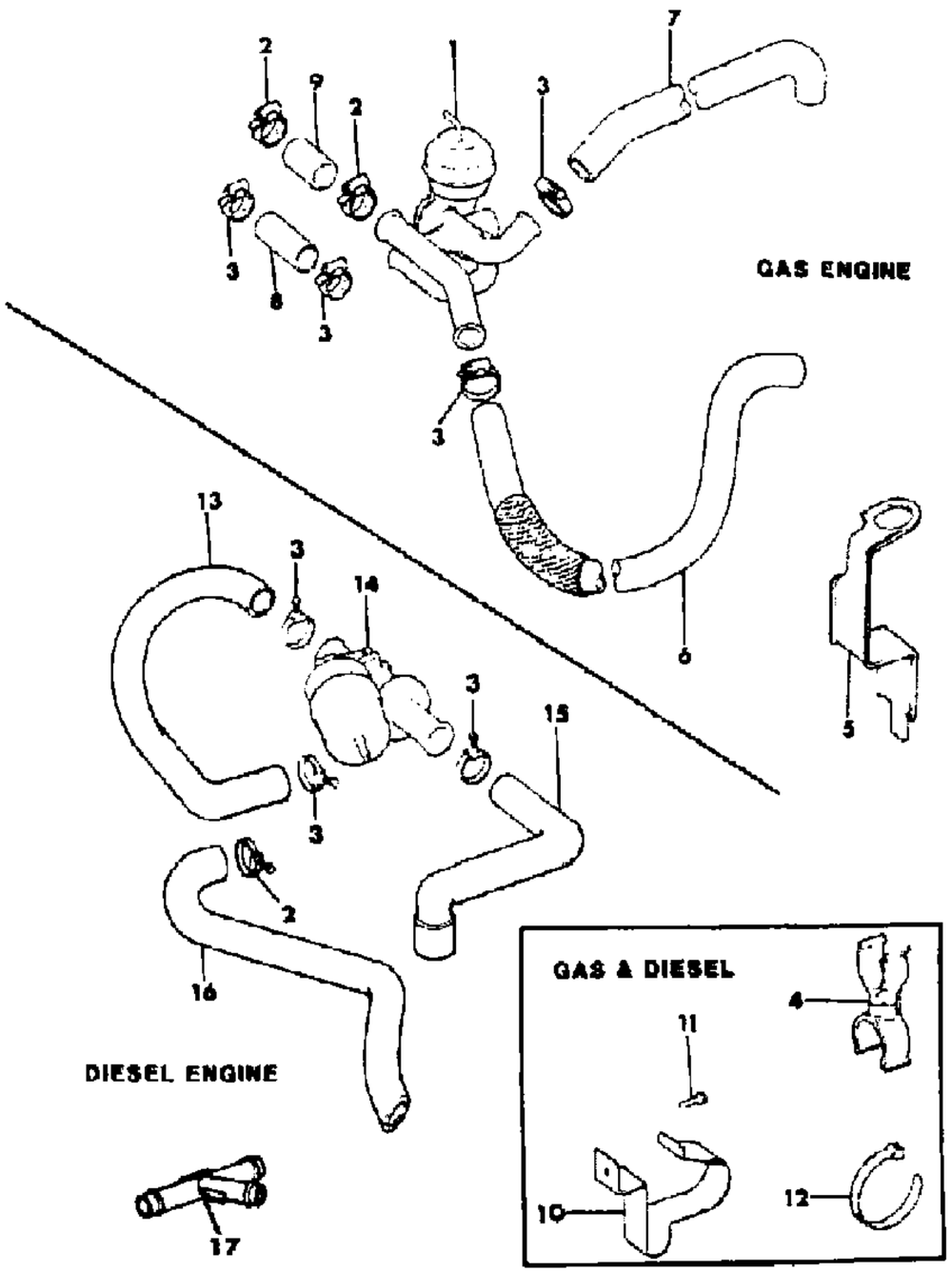

ITEM	PART NUMBER	QTY	BODY	MODEL	DESCRIPTION
1	5600 0414	1			VALVE, Heater Water
2	J320 3077	AR			CLAMP, 13/16" Thru 1 3/4"
3	J941 1984	AR			CLAMP, 9/16" Thru 1 1/16"
4	5600 1786	1			CLIP
5	5500 9747	1			BRACE
6					HOSE
	5600 1216	1			With Air Conditioning
	J448 6763	1			Without Air Conditioning, 3/4" Bulk
7					HOSE, Manifold To Water Valve
	5600 1254	1			1984-85
					1986
	5200 2738	1			
	5600 1254	1			Non-Regulated Markets
8	J320 3739	1			HOSE, 5/8" Bulk
9	J448 6763	1			HOSE, 3/4" Bulk
10	5600 0712	1			BRACKET
11	3420 1489	1			SCREW
12	J322 3227	1			STRAP
13	5600 1265	1			HOSE
14	J322 2290	1			VALVE, Heater Water
15	5600 1277	1			HOSE
16	5600 1696	1			HOSE
17	J400 6848	1			CONNECTOR

MODEL CODES

16=Cherokee 2 Dr.(1981-83)
17=Cherokee 2 Dr.(1981-83)
73=Cherokee 2WD-2 Dr.(1984-86)
74=Cherokee 2WD-4 Dr.(1984-86)
18=Cherokee 4 Dr.(1981-83)
77=Cherokee 4WD-2 Dr.(1984-86)
78=Cherokee 4WD-4 Dr.(1984-86)
85=CJ-5 (1981-83)
86=CJ-6(1981)
87=CJ-7(1981-86)
88=CJ-8, Scrambler(1981-86)
64=Comanche 2WD-6 Ft. Box(1986)
66=Comanche 2WD-7 Ft. Box(1986)
63=Comanche 4WD-6 Ft. Box(1986)
65=Comanche 4WD-7 Ft. Box(1986)
15=Grand Wagoneer 4 Dr.(1984-86)
25=J-10 Truck 7 Ft. Box(1981-84)
26=J10 Truck 8 Ft. Box(1981-86)
27=J-20 Truck 8 Ft. Box(1981-86)
15=Wagoneer 4 Dr.(1981-83)
75=Wagoneer 4WD-4 Dr.(1984-86)

BODY
CJ=CJ-5, CJ-6, CJ-7, CJ-8, Scrambler(1981-86)
MJ=Comanche Pickup(1986)

STYLES
SJ=Wagoneer(1981-83), Grand Wagoneer(1984-86), Cherokee(1981-83), J-10, J-20(1981-86)
XJ=Wagoneer(1984-86), Cherokee(1984-86)

AR = Use as Required - = Non Illustrated Part P.A.R. = Paint as Required

« RETURN TO GROUP INDEX

HOSES, HEATER SIX CYLINDER ENGINE XJ CHEROKEE, XJ WAGONEER, COMANCHE
Figure 24-700

81J24 700

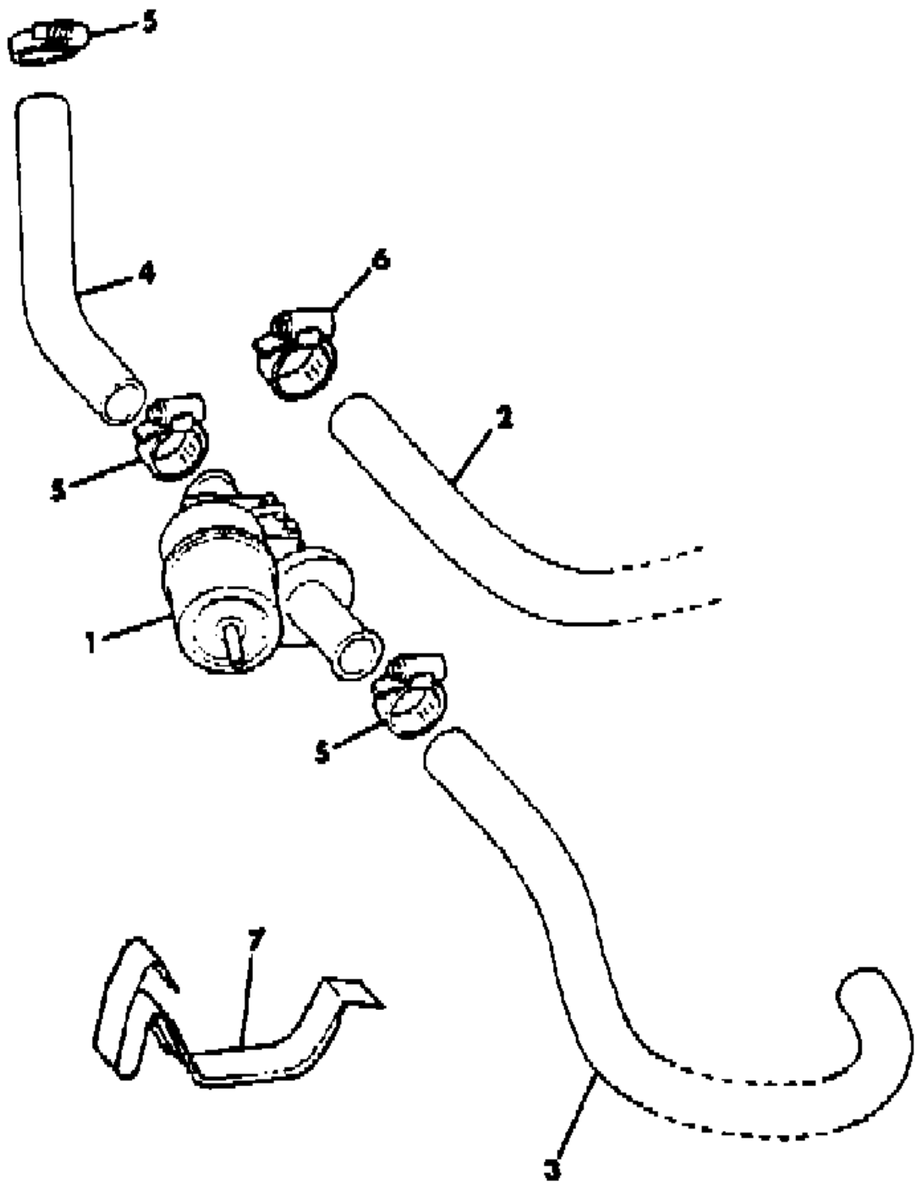

ITEM	PART NUMBER	QTY	BODY	MODEL	DESCRIPTION
1	J322 2290	1			VALVE, Heater Water
2	J448 6763	1			HOSE, 3/4" Bulk
3	5600 0880	1			HOSE
4	5600 1182	1			HOSE
5	J320 3076	AR			CLAMP, 9/16" Thru 1 1/16"
6	J320 3077	AR			CLAMP, 13/16" Thru 1 3/4"
7	5600 1140	1			CLIP

MODEL CODES

16=Cherokee 2 Dr.(1981-83)
17=Cherokee 2 Dr.(1981-83)
73=Cherokee 2WD-2 Dr.(1984-86)
74=Cherokee 2WD-4 Dr.(1984-86)
18=Cherokee 4 Dr.(1981-83)
77=Cherokee 4WD-2 Dr.(1984-86)
78=Cherokee 4WD-4 Dr.(1984-86)
85=CJ-5 (1981-83)
86=CJ-6(1981)
87=CJ-7(1981-86)
88=CJ-8, Scrambler(1981-86)
64=Comanche 2WD-6 Ft. Box(1986)
66=Comanche 2WD-7 Ft. Box(1986)
63=Comanche 4WD-6 Ft. Box(1986)
65=Comanche 4WD-7 Ft. Box(1986)
15=Grand Wagoneer 4 Dr.(1984-86)
25=J-10 Truck 7 Ft. Box(1981-84)
26=J10 Truck 8 Ft. Box(1981-86)
27=J-20 Truck 8 Ft. Box(1981-86)
15=Wagoneer 4 Dr.(1981-83)
75=Wagoneer 4WD-4 Dr.(1984-86)

BODY
CJ=CJ-5, CJ-6, CJ-7, CJ-8, Scrambler(1981-86)
MJ=Comanche Pickup(1986)

STYLES
SJ=Wagoneer(1981-83), Grand Wagoneer(1984-86), Cherokee(1981-83), J-10, J-20(1981-86)
XJ=Wagoneer(1984-86), Cherokee(1984-86)

AR = Use as Required - = Non Illustrated Part P.A.R. = Paint as Required

« RETURN TO GROUP INDEX

HOSES, HEATER SJ CHEROKEE, SJ WAGONEER, J10, J20
Figure 24-800

81J24 800

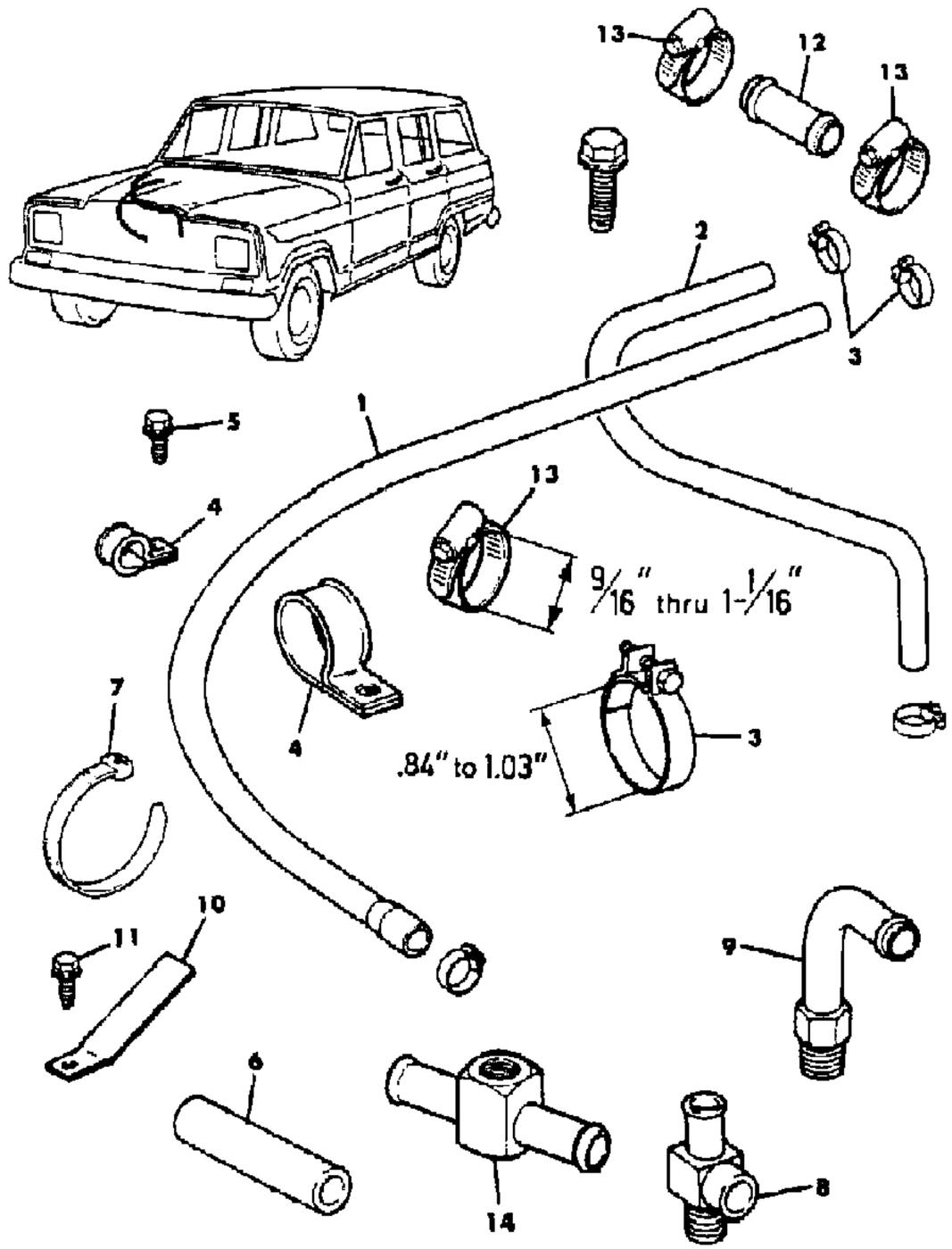

ITEM	PART NUMBER	QTY	BODY	MODEL	DESCRIPTION
1					HOSE, Core to Pump
	J575 5252	1			1981-83
	J576 5301	1			1984-86
	J805 1780	1			EXPORT, Right Hand Drive
2					HOSE, Manifold To Heater Core
					Six Cylinder
	J575 8482	1			1981-82
	J320 3739	1			1983-86: Bulk
	J805 1779	1			EXPORT, Right Hand Drive
					Eight Cylinder
	J320 3739	1			1981-83: Bulk
	J576 4195	1			1984-86
	J805 1781	1			EXPORT, Right Hand Drive
3	S044 3632	AR			CLAMP
4	J400 3838	1			CLIP
5					SCREW
	J400 1814	1			Eight Cylinder
6					PROTECTOR, Hose
	J535 4540	1			Eight Cylinder
7					STRAP
	J322 3227	1			Six Cylinder
8					FITTING, 90 Degree
	5300 0680	1			Eight Cylinder
9					NIPPLE, Manifold
	J321 9631	1			Eight Cylinder
10					BRACKET, Hose Mounting
	J576 4086	1			Six Cylinder
	J546 0142				EXPORT, Right Hand Drive
11	J400 1701	1			SCREW
12					COUPLING ***
					Eight Cylinder
	J805 3245	1			EXPORT, Right Hand Drive
13	J320 3076	2			CLAMP
14					TUBE ASSEMBLY, CTO Switch ***
	J372 8089	1			Six Cylinder

MODEL CODES

16=Cherokee 2 Dr.(1981-83)
17=Cherokee 2 Dr.(1981-83)
73=Cherokee 2WD-2 Dr.(1984-86)
74=Cherokee 2WD-4 Dr.(1984-86)
18=Cherokee 4 Dr.(1981-83)
77=Cherokee 4WD-2 Dr.(1984-86)
78=Cherokee 4WD-4 Dr.(1984-86)
85=CJ-5 (1981-83)
86=CJ-6(1981)
87=CJ-7(1981-86)
88=CJ-8, Scrambler(1981-86)
64=Comanche 2WD-6 Ft. Box(1986)
66=Comanche 2WD-7 Ft. Box(1986)
63=Comanche 4WD-6 Ft. Box(1986)
65=Comanche 4WD-7 Ft. Box(1986)
15=Grand Wagoneer 4 Dr.(1984-86)
25=J-10 Truck 7 Ft. Box(1981-84)
26=J10 Truck 8 Ft. Box(1981-86)
27=J-20 Truck 8 Ft. Box(1981-86)
15=Wagoneer 4 Dr.(1981-83)
75=Wagoneer 4WD-4 Dr.(1984-86)

BODY
CJ=CJ-5, CJ-6, CJ-7, CJ-8, Scrambler(1981-86)
MJ=Comanche Pickup(1986)

STYLES
SJ=Wagoneer(1981-83), Grand Wagoneer(1984-86), Cherokee(1981-83), J-10, J-20(1981-86)
XJ=Wagoneer(1984-86), Cherokee(1984-86)

AR = Use as Required - = Non Illustrated Part P.A.R. = Paint as Required

« RETURN TO GROUP INDEX

Figure 24-900

81J24 900

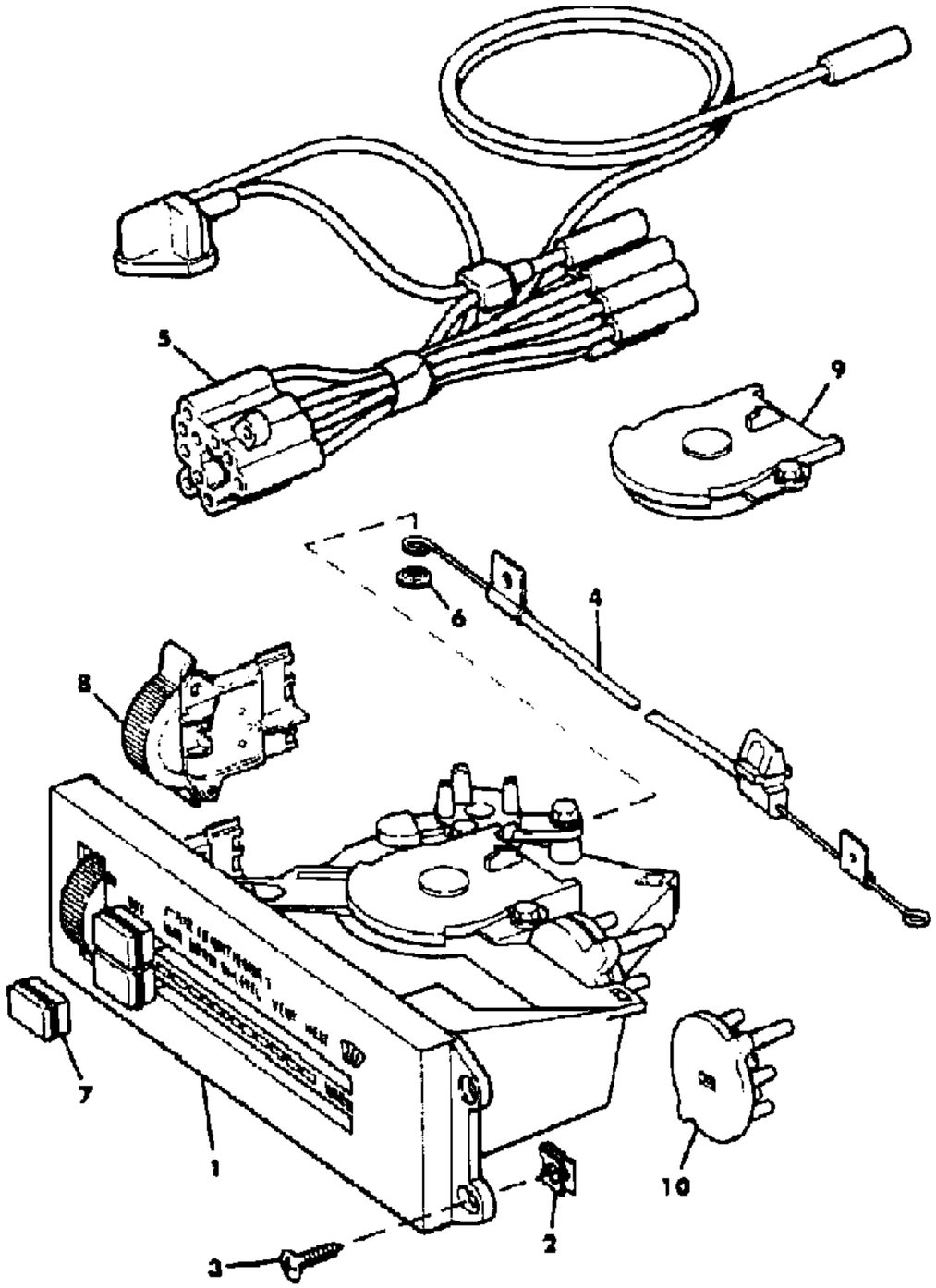

ITEM	PART NUMBER	QTY	BODY	MODEL	DESCRIPTION
1					CONTROL, Heater
	5600 0240	1			Without Factory Air Conditioning
					CONTROL, Heater And Air Conditioning
	5600 0241	1			With Factory Air Conditioning
	5600 0241	1			With American Air Conditioning
2	J400 4223	4			NUT
3	J942 2008	4			SCREW
4	5600 0144	1			CABLE, Blend Air Door
5					HARNESS, Vacuum
	8220 0124	1			With American Air Conditioning
6	J400 6866	1			NUT
7	8350 2181	2			KNOB, Heater And Air Condtitioning Control
8	8350 2184	1			SWITCH, Heater And Air Conditioning Blower
9	8350 2185	1			SWITCH, Selector
10					SWITCH, Vacuum
	8350 2182	1			Without Factory Air Conditioning
	8350 2183	1			With Factory Air Conditioning

MODEL CODES

16=Cherokee 2 Dr.(1981-83)
17=Cherokee 2 Dr.(1981-83)
73=Cherokee 2WD-2 Dr.(1984-86)
74=Cherokee 2WD-4 Dr.(1984-86)
18=Cherokee 4 Dr.(1981-83)
77=Cherokee 4WD-2 Dr.(1984-86)
78=Cherokee 4WD-4 Dr.(1984-86)
85=CJ-5 (1981-83)
86=CJ-6(1981)
87=CJ-7(1981-86)
88=CJ-8, Scrambler(1981-86)
64=Comanche 2WD-6 Ft. Box(1986)
66=Comanche 2WD-7 Ft. Box(1986)
63=Comanche 4WD-6 Ft. Box(1986)
65=Comanche 4WD-7 Ft. Box(1986)
15=Grand Wagoneer 4 Dr.(1984-86)
25=J-10 Truck 7 Ft. Box(1981-84)
26=J10 Truck 8 Ft. Box(1981-86)
27=J-20 Truck 8 Ft. Box(1981-86)
15=Wagoneer 4 Dr.(1981-83)
75=Wagoneer 4WD-4 Dr.(1984-86)

BODY
CJ=CJ-5, CJ-6, CJ-7, CJ-8, Scrambler(1981-86)
MJ=Comanche Pickup(1986)

STYLES
SJ=Wagoneer(1981-83), Grand Wagoneer(1984-86), Cherokee(1981-83), J-10, J-20(1981-86)
XJ=Wagoneer(1984-86), Cherokee(1984-86)

AR = Use as Required - = Non Illustrated Part P.A.R. = Paint as Required

« RETURN TO GROUP INDEX

CONTROLS, HEATER AND AIR CONDITIONING XJ CHEROKEE, XJ WAGONEER, COMANCHE 1986
Figure 24-1000

81J24 1000

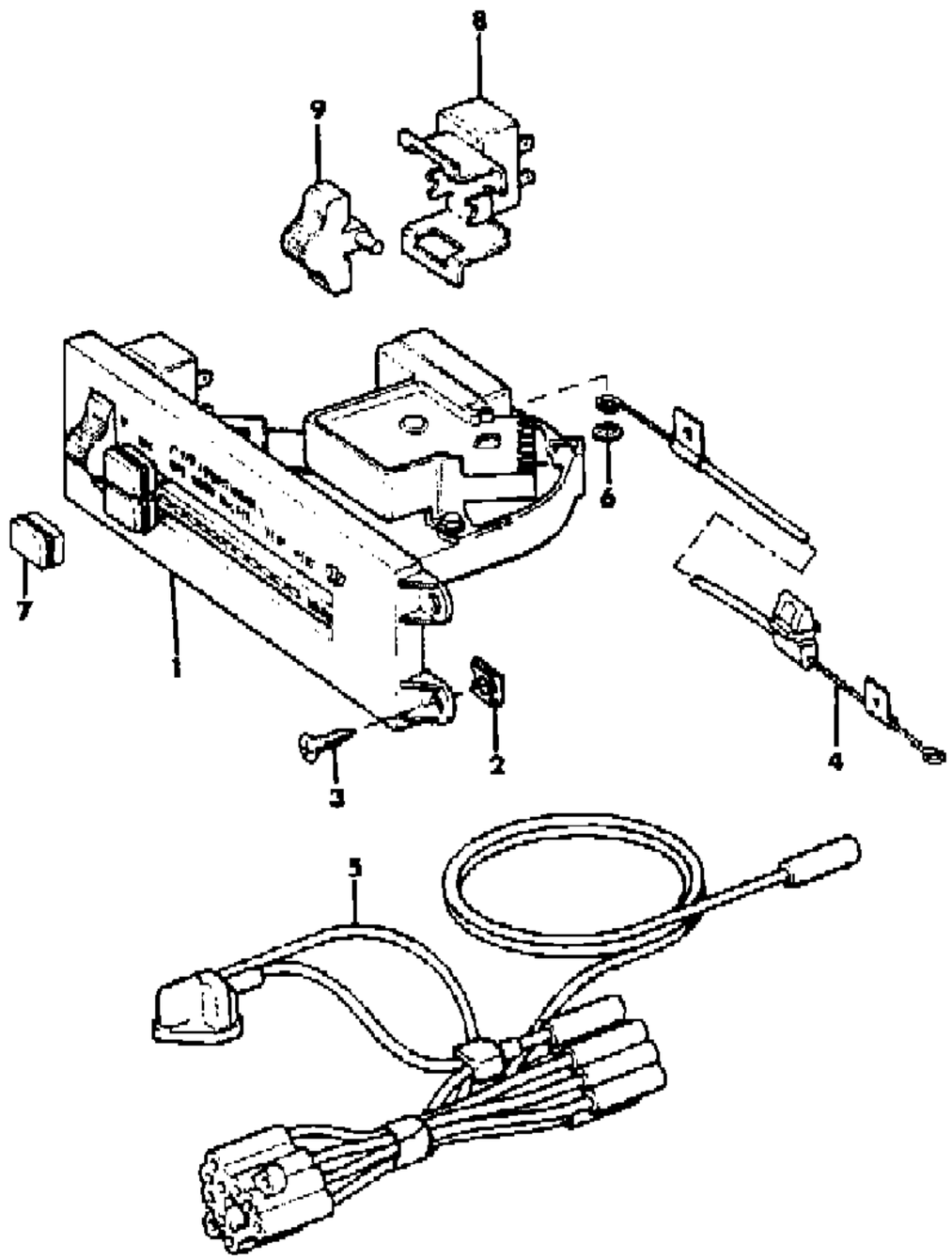

ITEM	PART NUMBER	QTY	BODY	MODEL	DESCRIPTION
1					CONTROL, Heater
	5600 1761	1			Without Factory Air Conditioning
					CONTROL, Heater And Air Conditioning
	5600 1762	1			With Factory Air Conditioning
	5600 1762	1			With American Air Conditioning
2	J400 4223	4			NUT
3	1150 1012	4			SCREW
4	5600 0144	1			CABLE, Blend Air Door
5					HARNESS, Vacuum
	5600 1771	1			With American Air Conditioning
6	J400 6886	1			NUT
7	8350 2718	2			KNOB, Heater And Air Conditioning Control
8	8350 2719	1			SWITCH, Heater And Air Conditioning Blower
9	8350 2721	1			WHEEL, Thumb

MODEL CODES

16=Cherokee 2 Dr.(1981-83)	78=Cherokee 4WD-4 Dr.(1984-86)	64=Comanche 2WD-6 Ft. Box(1986)	25=J-10 Truck 7 Ft. Box(1981-84)
17=Cherokee 2 Dr.(1981-83)	85=CJ-5 (1981-83)	66=Comanche 2WD-7 Ft. Box(1986)	26=J10 Truck 8 Ft. Box(1981-86)
73=Cherokee 2WD-2 Dr.(1984-86)	86=CJ-6(1981)	63=Comanche 4WD-6 Ft. Box(1986)	27=J-20 Truck 8 Ft. Box(1981-86)
74=Cherokee 2WD-4 Dr.(1984-86)	87=CJ-7(1981-86)	65=Comanche 4WD-7 Ft. Box(1986)	15=Wagoneer 4 Dr.(1981-83)
18=Cherokee 4 Dr.(1981-83)	88=CJ-8, Scrambler(1981-86)	15=Grand Wagoneer 4 Dr.(1984-86)	75=Wagoneer 4WD-4 Dr.(1984-86)
77=Cherokee 4WD-2 Dr.(1984-86)			

BODY
CJ=CJ-5, CJ-6, CJ-7, CJ-8, Scrambler(1981-86)
MJ=Comanche Pickup(1986)

STYLES
SJ=Wagoneer(1981-83), Grand Wagoneer(1984-86), Cherokee(1981-83), J-10, J-20(1981-86)
XJ=Wagoneer(1984-86), Cherokee(1984-86)

AR = Use as Required - = Non Illustrated Part P.A.R. = Paint as Required

« RETURN TO GROUP INDEX

CONTROLS, HEATER AND AIR CONDITIONING SJ CHEROKEE, SJ WAGONEER, J10, J20 1981-85
Figure 24-1100

81J24 1100

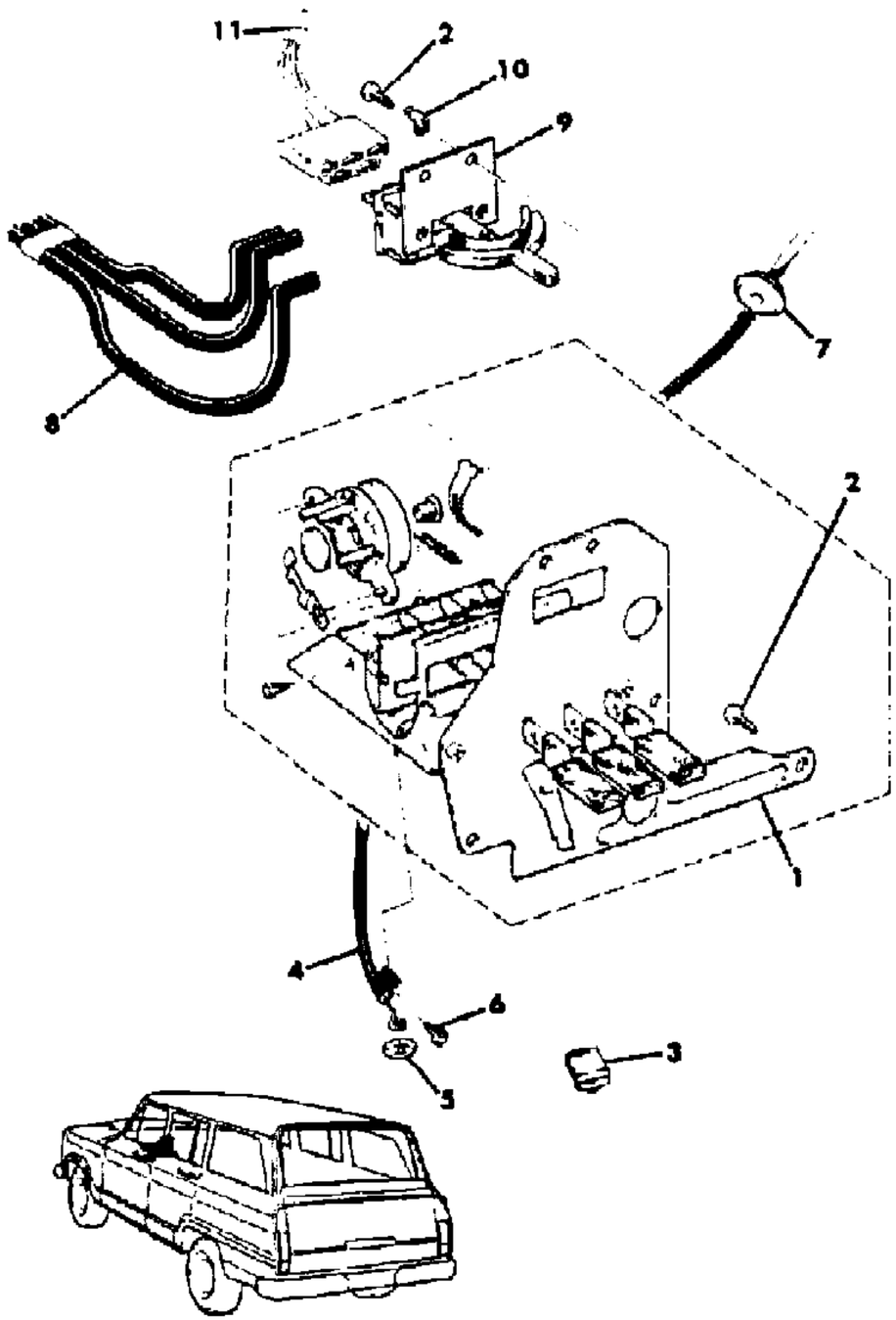

ITEM	PART NUMBER	QTY	BODY	MODEL	DESCRIPTION
1					CONTROL, Heater
	J098 7935	1			Without Factory Air Conditioning
2	J016 3162	4			SCREW
3	J098 7936	1			KNOB, Heater Control
4	J098 8118	1			CABLE, Temperature Control
5	J096 0299	1			NUT
6	J812 0052	1			SCREW
7	J321 3963	1			GROMMET
8					HARNESS ASSEMBLY, Vacuum
	J576 2379	1			1982-85
					HOSE, Vacuum
	J812 5810	AR			1981: Bulk
9	J363 1605	1			SWITCH, Heater Blower
10	J535 0421	1			TERMINAL
11					HARNESS, Air Conditioning
	J546 8981	1			1981-82
	J576 3561	1			1983-85

MODEL CODES

16=Cherokee 2 Dr.(1981-83)
17=Cherokee 2 Dr.(1981-83)
73=Cherokee 2WD-2 Dr.(1984-86)
74=Cherokee 2WD-4 Dr.(1984-86)
18=Cherokee 4 Dr.(1981-83)
77=Cherokee 4WD-2 Dr.(1984-86)
78=Cherokee 4WD-4 Dr.(1984-86)
85=CJ-5 (1981-83)
86=CJ-6(1981)
87=CJ-7(1981-86)
88=CJ-8, Scrambler(1981-86)
64=Comanche 2WD-6 Ft. Box(1986)
66=Comanche 2WD-7 Ft. Box(1986)
63=Comanche 4WD-6 Ft. Box(1986)
65=Comanche 4WD-7 Ft. Box(1986)
15=Grand Wagoneer 4 Dr.(1984-86)
25=J-10 Truck 7 Ft. Box(1981-84)
26=J10 Truck 8 Ft. Box(1981-86)
27=J-20 Truck 8 Ft. Box(1981-86)
15=Wagoneer 4 Dr.(1981-83)
75=Wagoneer 4WD-4 Dr.(1984-86)

BODY
CJ=CJ-5, CJ-6, CJ-7, CJ-8, Scrambler(1981-86)
MJ=Comanche Pickup(1986)

STYLES
SJ=Wagoneer(1981-83), Grand Wagoneer(1984-86), Cherokee(1981-83), J-10, J-20(1981-86)
XJ=Wagoneer(1984-86), Cherokee(1984-86)

AR = Use as Required - = Non Illustrated Part P.A.R. = Paint as Required

« RETURN TO GROUP INDEX

CONTROLS, HEATER AND AIR CONDITIONING SJ GRAND WAGONEER, J10, J20 1986
Figure 24-1200

81J24 1200

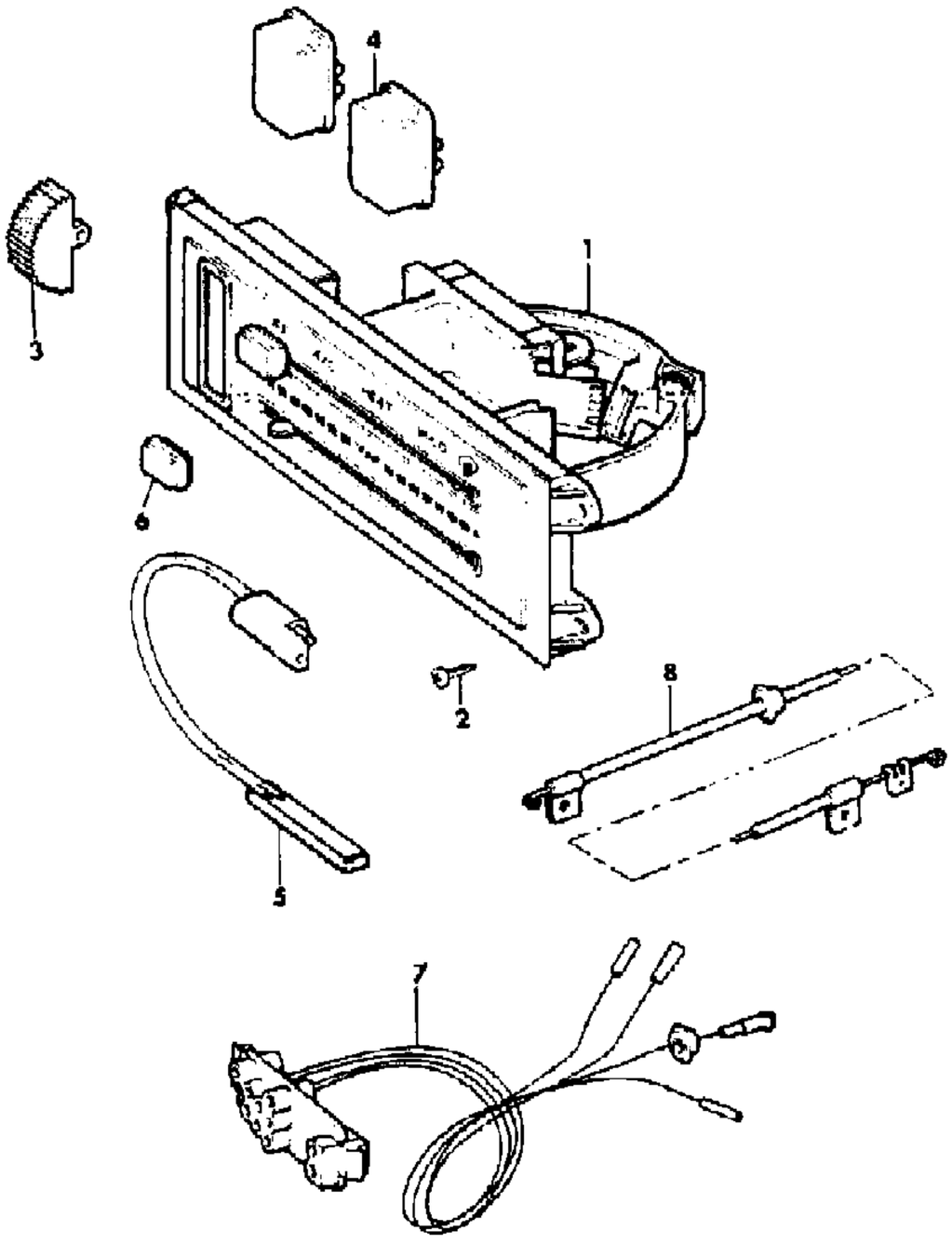

ITEM	PART NUMBER	QTY	BODY	MODEL	DESCRIPTION
1					CONTROL, Heater
	5600 1688	1			Without Factory Air Conditioning
					CONTROL, Heater And Air Conditioning
	5600 1492	1			With Factory Air Conditioning
2	T301 6024	4			SCREW
3	8350 2721	1			WHEEL, Thumb
4					SWITCH, Heater Blower
	8350 2719	1			Without Factory Air Conditioning
					SWITCH, Heater And Air Conditioning Blower
	8350 2720	1			With Factory Air Conditioning
5					POTENTIOMETER ***
	8350 2722	1			With Factory Air Conditioning
6	8350 2718	2			KNOB, Heater And Air Conditioning Control
7	5600 1506	1			HARNESS, Vacuum
8	5600 1505	1			CABLE, Temperature Control

MODEL CODES

16=Cherokee 2 Dr.(1981-83)
17=Cherokee 2 Dr.(1981-83)
73=Cherokee 2WD-2 Dr.(1984-86)
74=Cherokee 2WD-4 Dr.(1984-86)
18=Cherokee 4 Dr.(1981-83)
77=Cherokee 4WD-2 Dr.(1984-86)
78=Cherokee 4WD-4 Dr.(1984-86)
85=CJ-5 (1981-83)
86=CJ-6(1981)
87=CJ-7(1981-86)
88=CJ-8, Scrambler(1981-86)
64=Comanche 2WD-6 Ft. Box(1986)
66=Comanche 2WD-7 Ft. Box(1986)
63=Comanche 4WD-6 Ft. Box(1986)
65=Comanche 4WD-7 Ft. Box(1986)
15=Grand Wagoneer 4 Dr.(1984-86)
25=J-10 Truck 7 Ft. Box(1981-84)
26=J10 Truck 8 Ft. Box(1981-86)
27=J-20 Truck 8 Ft. Box(1981-86)
15=Wagoneer 4 Dr.(1981-83)
75=Wagoneer 4WD-4 Dr.(1984-86)

BODY
CJ=CJ-5, CJ-6, CJ-7, CJ-8, Scrambler(1981-86)
MJ=Comanche Pickup(1986)

STYLES
SJ=Wagoneer(1981-83), Grand Wagoneer(1984-86), Cherokee(1981-83), J-10, J-20(1981-86)
XJ=Wagoneer(1984-86), Cherokee(1984-86)

AR = Use as Required - = Non Illustrated Part P.A.R. = Paint as Required

« RETURN TO GROUP INDEX

EVAPORATOR AND BLOWER, AIR CONDITIONING CJ-5,6,7,8, SCRAMBLER
Figure 24-1300

81J24 1300

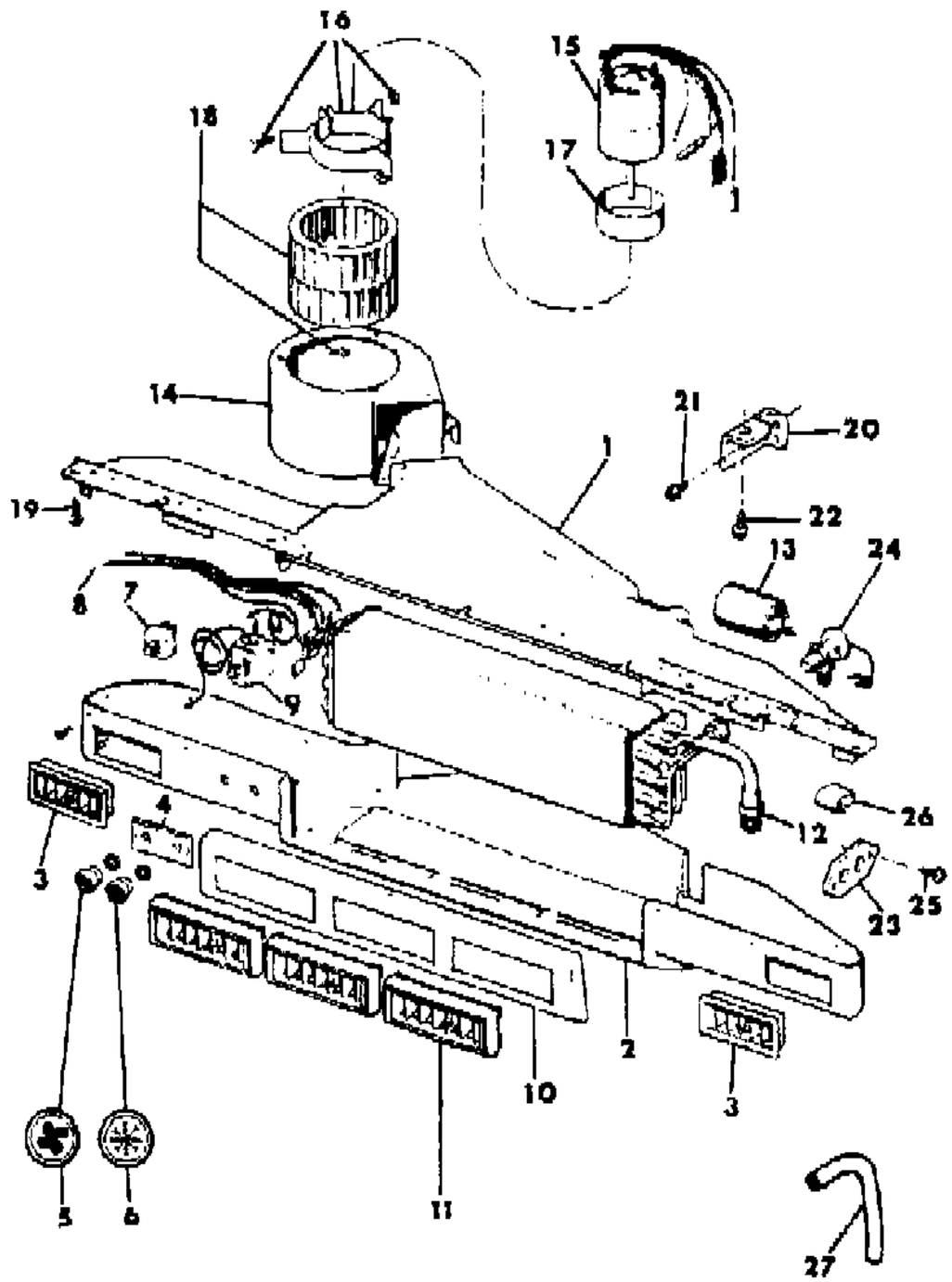

ITEM	PART NUMBER	QTY	BODY	MODEL	DESCRIPTION
1					HOUSING, Evaporator Upper
	J812 8122	1			With Factory Air Conditioning
					With American Air Conditioning
	J812 7558	1			1981-82
	J812 8122	1			1983-86
2					HOUSING, Evaporator Lower
	J812 8123	1			With Factory Air Conditioning
					With American Air Conditioning
	J812 7559	1			1981-82
	J812 8123	1			1983-86
3					OUTLET, Air
	J812 8135	1			With Factory Air Conditioning
					With American Air Conditioning
	J812 7561	1			1981-82
	J812 8135	1			1983-86
4	J812 8133	1			PLATE
5	J813 3710	1			KNOB, Blower Switch
6	J813 3711	1			KNOB, Temperature Control
7	J812 9018	1			SWITCH, Blower
8					HARNESS, Air Conditioning
	J813 2666	1			With Factory Air Conditioning
					With American Air Conditioning
	J812 7565	1			1981-82
	J813 2666	1			1983-86
9	J812 1840	1			THERMOSTAT
10	J812 8129	1			PANEL, Outlet Mounting
11					OUTLET, Air
	J812 8134	1			With Factory Air Conditioning
					With American Air Conditioning
	J812 7561	1			1981-82
	J812 8134	1			1983-86
12					CORE, Evaporator
	J812 8124	1			With Factory Air Conditioning
					With American Air Conditioning
	J812 7560	1			1981-82
	J812 8124	1			1983-86
13	J315 8337	1			TAPE, Insulation
14	J812 8128	1			HOUSING, Blower/Evaporator
15					MOTOR, Blower

MODEL CODES

16=Cherokee 2 Dr.(1981-83)
17=Cherokee 2 Dr.(1981-83)
73=Cherokee 2WD-2 Dr.(1984-86)
74=Cherokee 2WD-4 Dr.(1984-86)
18=Cherokee 4 Dr.(1981-83)
77=Cherokee 4WD-2 Dr.(1984-86)
78=Cherokee 4WD-4 Dr.(1984-86)
85=CJ-5 (1981-83)
86=CJ-6(1981)
87=CJ-7(1981-86)
88=CJ-8, Scrambler(1981-86)
64=Comanche 2WD-6 Ft. Box(1986)
66=Comanche 2WD-7 Ft. Box(1986)
63=Comanche 4WD-6 Ft. Box(1986)
65=Comanche 4WD-7 Ft. Box(1986)
15=Grand Wagoneer 4 Dr.(1984-86)
25=J-10 Truck 7 Ft. Box(1981-84)
26=J10 Truck 8 Ft. Box(1981-86)
27=J-20 Truck 8 Ft. Box(1981-86)
15=Wagoneer 4 Dr.(1981-83)
75=Wagoneer 4WD-4 Dr.(1984-86)

BODY
CJ=CJ-5, CJ-6, CJ-7, CJ-8, Scrambler(1981-86)
MJ=Comanche Pickup(1986)

STYLES
SJ=Wagoneer(1981-83), Grand Wagoneer(1984-86), Cherokee(1981-83), J-10, J-20(1981-86)
XJ=Wagoneer(1984-86), Cherokee(1984-86)

AR = Use as Required - = Non Illustrated Part P.A.R. = Paint as Required

EVAPORATOR AND BLOWER, AIR CONDITIONING CJ-5,6,7,8, SCRAMBLER
Figure 24-1300

81J24 1300

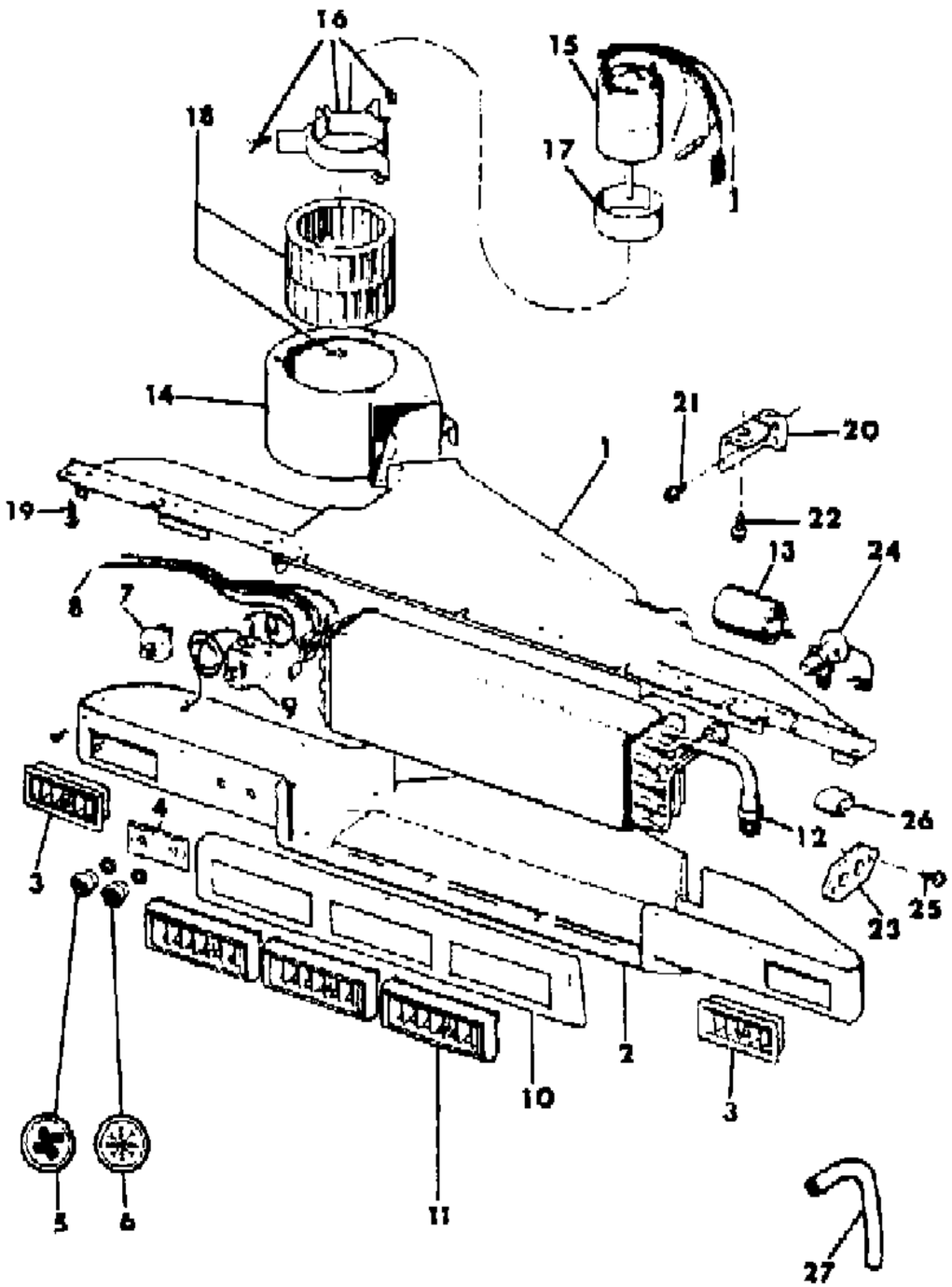

ITEM	PART NUMBER	QTY	BODY	MODEL	DESCRIPTION
	J812 8125	1			With Factory Air Conditioning
	J812 6691	1			With American Air Conditioning
16	J812 8139	1			BRACKET, Blower Motor
17	J812 6993	1			INSULATION
18	J812 6991	1			WHEEL, Blower
19	J812 0054	4			SCREW
20					BRACKET, Support
	J535 6555	1			1981-82
	J576 3697	1			1983-86
21	J400 4077	2			SCREW
22	J400 1701	1			SCREW
23	J318 5484	1			GROMMET
24	J812 1823	1			VALVE, Expansion
25	J400 4642	2			SCREW
26	J812 1901	1			CLAMP
27					TUBE, Drain
					1981-82
	J812 1901	1			With Factory Air Conditioning
	J813 2669	1			With American Air Conditioning
	J576 2368	1			1983-86

MODEL CODES

16=Cherokee 2 Dr.(1981-83)
17=Cherokee 2 Dr.(1981-83)
73=Cherokee 2WD-2 Dr.(1984-86)
74=Cherokee 2WD-4 Dr.(1984-86)
18=Cherokee 4 Dr.(1981-83)
77=Cherokee 4WD-2 Dr.(1984-86)
78=Cherokee 4WD-4 Dr.(1984-86)
85=CJ-5 (1981-83)
86=CJ-6(1981)
87=CJ-7(1981-86)
88=CJ-8, Scrambler(1981-86)
64=Comanche 2WD-6 Ft. Box(1986)
66=Comanche 2WD-7 Ft. Box(1986)
63=Comanche 4WD-6 Ft. Box(1986)
65=Comanche 4WD-7 Ft. Box(1986)
15=Grand Wagoneer 4 Dr.(1984-86)
25=J-10 Truck 7 Ft. Box(1981-84)
26=J10 Truck 8 Ft. Box(1981-86)
27=J-20 Truck 8 Ft. Box(1981-86)
15=Wagoneer 4 Dr.(1981-83)
75=Wagoneer 4WD-4 Dr.(1984-86)

BODY
CJ=CJ-5, CJ-6, CJ-7, CJ-8, Scrambler(1981-86)
MJ=Comanche Pickup(1986)

STYLES
SJ=Wagoneer(1981-83), Grand Wagoneer(1984-86), Cherokee(1981-83), J-10, J-20(1981-86)
XJ=Wagoneer(1984-86), Cherokee(1984-86)

AR = Use as Required - = Non Illustrated Part P.A.R. = Paint as Required

« RETURN TO GROUP INDEX

BLOWER MOTOR AND HOUSING HEATER AND AIR CONDITIONING XJ CHEROKEE, XJ WAGONEER, COMANCHE
Figure 24-1400

81J24 1400

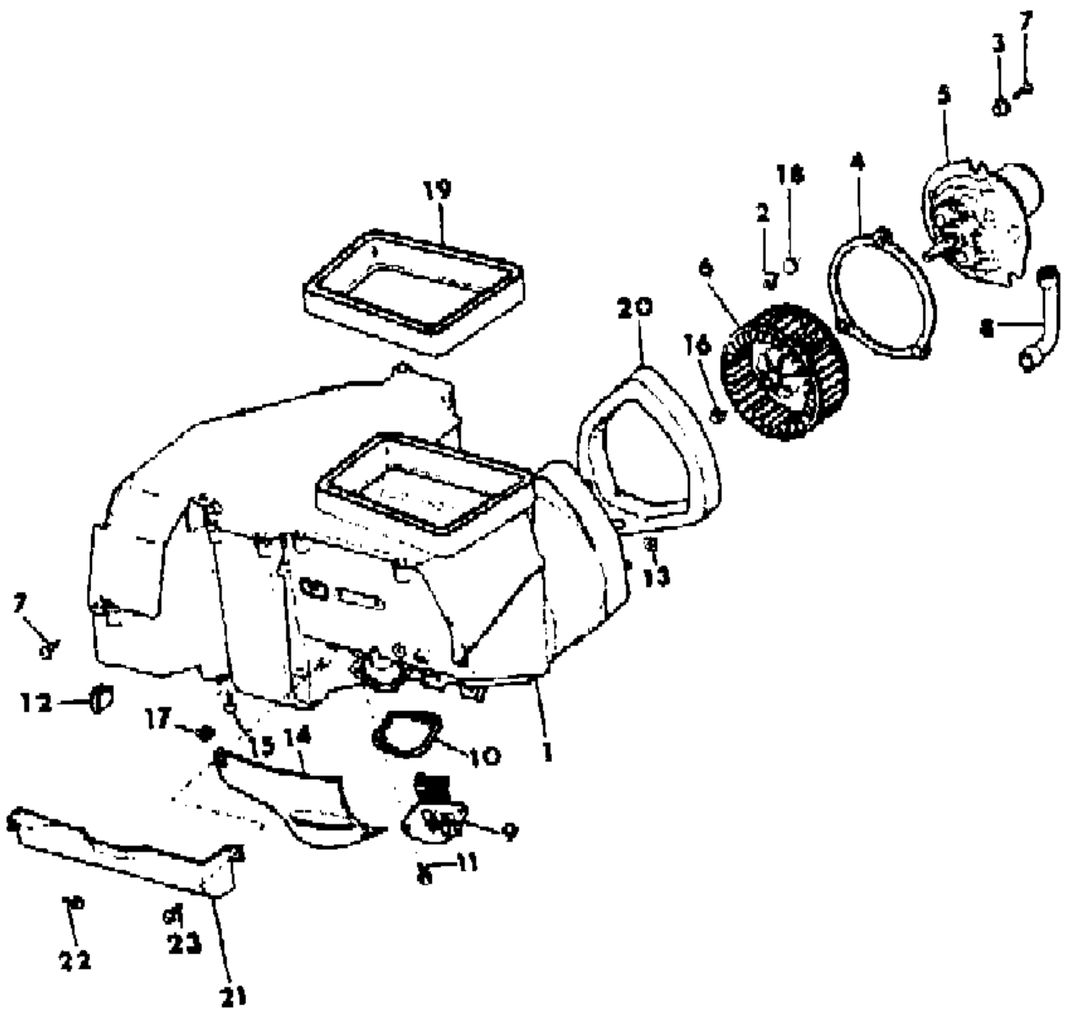

ITEM	PART NUMBER	QTY	BODY	MODEL	DESCRIPTION
1					HOUSING, Blower
					With Factory Air Conditioning
	8350 0960	1			Four Cylinder
	8350 0960	1			Six Cylinder
	8350 1868	1			Diesel
	8350 1973	1			With American Air Conditioning
					Without Air Conditioning
	8350 0958	1			Four Cylinder
	8350 0958	1			Six Cylinder
	8350 1869	1			Diesel
2	3420 1363	3			U-NUT
3	5600 0176	3			SPACER
4	5600 0171	1			GASKET
5	5600 0173	1			MOTOR, Blower
6	5600 0174	1			WHEEL, Blower
7	3420 1362	5			SCREW
8	5600 0178	1			TUBE, Cooling
9					RESISTOR
	5600 0177	1			With Air Conditioning
	5600 0522	1			Without Air Conditioning
10	5600 0682	1			SEAL
11	3420 1366	2			SCREW
12	J400 6391	1			CLIP
13	3420 1358	3			NUT
14	5600 0622	1			COVER
15	3420 2344	1			SCREW
16	J318 0753	1			CLAMP
17	J400 6866	1			NUT, Push
18	5600 1195	3			SEAL
19	5600 1196	1			SEAL
20	5600 1295	1			SEAL
21					COVER, Blend Air
	5600 2634	1			Economic Commission of Europe
22					SCREW
	J941 7855	1			Economic Commission of Europe
23					SCREW
	3420 1365	1			Economic Commission of Europe

MODEL CODES

16=Cherokee 2 Dr.(1981-83)	78=Cherokee 4WD-4 Dr.(1984-86)	64=Comanche 2WD-6 Ft. Box(1986)	25=J-10 Truck 7 Ft. Box(1981-84)
17=Cherokee 2 Dr.(1981-83)	85=CJ-5 (1981-83)	66=Comanche 2WD-7 Ft. Box(1986)	26=J10 Truck 8 Ft. Box(1981-86)
73=Cherokee 2WD-2 Dr.(1984-86)	86=CJ-6(1981)	63=Comanche 4WD-6 Ft. Box(1986)	27=J-20 Truck 8 Ft. Box(1981-86)
74=Cherokee 2WD-4 Dr.(1984-86)	87=CJ-7(1981-86)	65=Comanche 4WD-7 Ft. Box(1986)	15=Wagoneer 4 Dr.(1981-83)
18=Cherokee 4 Dr.(1981-83)	88=CJ-8, Scrambler(1981-86)	15=Grand Wagoneer 4 Dr.(1984-86)	75=Wagoneer 4WD-4 Dr.(1984-86)
77=Cherokee 4WD-2 Dr.(1984-86)			

BODY
CJ=CJ-5, CJ-6, CJ-7, CJ-8, Scrambler(1981-86)
MJ=Comanche Pickup(1986)

STYLES
SJ=Wagoneer(1981-83), Grand Wagoneer(1984-86), Cherokee(1981-83), J-10, J-20(1981-86)
XJ=Wagoneer(1984-86), Cherokee(1984-86)

AR = Use as Required - = Non Illustrated Part P.A.R. = Paint as Required

« RETURN TO GROUP INDEX

CORE, EVAPORATOR XJ CHEROKEE, XJ WAGONEER COMANCHE
Figure 24-1500

81J24 1500

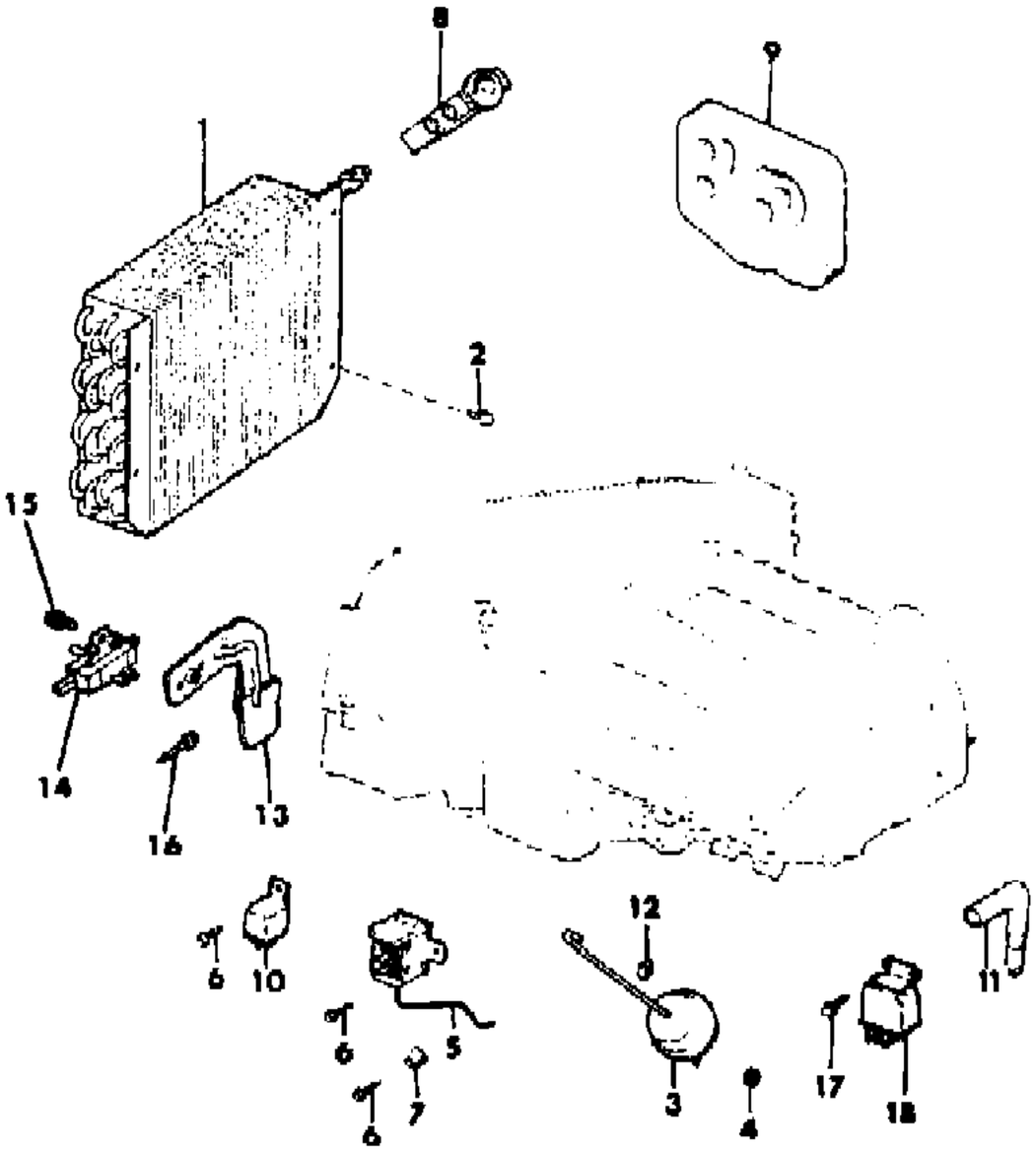

ITEM	PART NUMBER	QTY	BODY	MODEL	DESCRIPTION
1					CORE, Evaporator
					With Factory Air Conditioning
	5600 0210	1			1984-85
	5600 1214	1			1986
	8350 1906	1			With American Air Conditioning
2	1150 2843	4			SCREW
3	5600 0208	1			MOTOR, Evaporator Vacuum
4	3420 1001	2			NUT
5	5600 0222	1			CONTROL, Thermostat
6	3420 1366	4			SCREW
7	J317 7100	1			CLIP
8					VALVE, Expansion
	5600 0212	1			With Factory Air Conditioning
	8350 1907	1			With American Air Conditioning
9					SEAL
	5600 0189	1			1984
	5600 1286	1			1985-86
10					RELAY, Evaporator
	3600 0400	1			With Factory Air Conditioning
	8350 0154	1			With American Air Conditioning
11	5600 0726	1			TUBE, Drain
12	J400 0369	1			NUT, Push
13					BRACKET
	5300 2323	1			1985: Diesel
14					SWITCH, Clutch Cut-Off
	3300 0775	1			1985: Diesel
15					SCREW
	1150 2453	1			1985: Diesel
16					RIVET
	3420 1035	2			1985: Diesel
17					SCREW
	1150 1608	1			1985: Diesel
18					RELAY, Cut-Off
	3300 2326	2			1985: Diesel

MODEL CODES

16=Cherokee 2 Dr.(1981-83)
17=Cherokee 2 Dr.(1981-83)
73=Cherokee 2WD-2 Dr.(1984-86)
74=Cherokee 2WD-4 Dr.(1984-86)
18=Cherokee 4 Dr.(1981-83)
77=Cherokee 4WD-2 Dr.(1984-86)
78=Cherokee 4WD-4 Dr.(1984-86)
85=CJ-5 (1981-83)
86=CJ-6(1981)
87=CJ-7(1981-86)
88=CJ-8, Scrambler(1981-86)
64=Comanche 2WD-6 Ft. Box(1986)
66=Comanche 2WD-7 Ft. Box(1986)
63=Comanche 4WD-6 Ft. Box(1986)
65=Comanche 4WD-7 Ft. Box(1986)
15=Grand Wagoneer 4 Dr.(1984-86)
25=J-10 Truck 7 Ft. Box(1981-84)
26=J10 Truck 8 Ft. Box(1981-86)
27=J-20 Truck 8 Ft. Box(1981-86)
15=Wagoneer 4 Dr.(1981-83)
75=Wagoneer 4WD-4 Dr.(1984-86)

BODY
CJ=CJ-5, CJ-6, CJ-7, CJ-8, Scrambler(1981-86)
MJ=Comanche Pickup(1986)

STYLES
SJ=Wagoneer(1981-83), Grand Wagoneer(1984-86), Cherokee(1981-83), J-10, J-20(1981-86)
XJ=Wagoneer(1984-86), Cherokee(1984-86)

AR = Use as Required - = Non Illustrated Part P.A.R. = Paint as Required

« RETURN TO GROUP INDEX

EVAPORATOR AND BLOWER, AIR CONDITIONING SJ CHEROKEE, SJ WAGONEER, J10, J20 1981-85
Figure 24-1600

81J24 1600

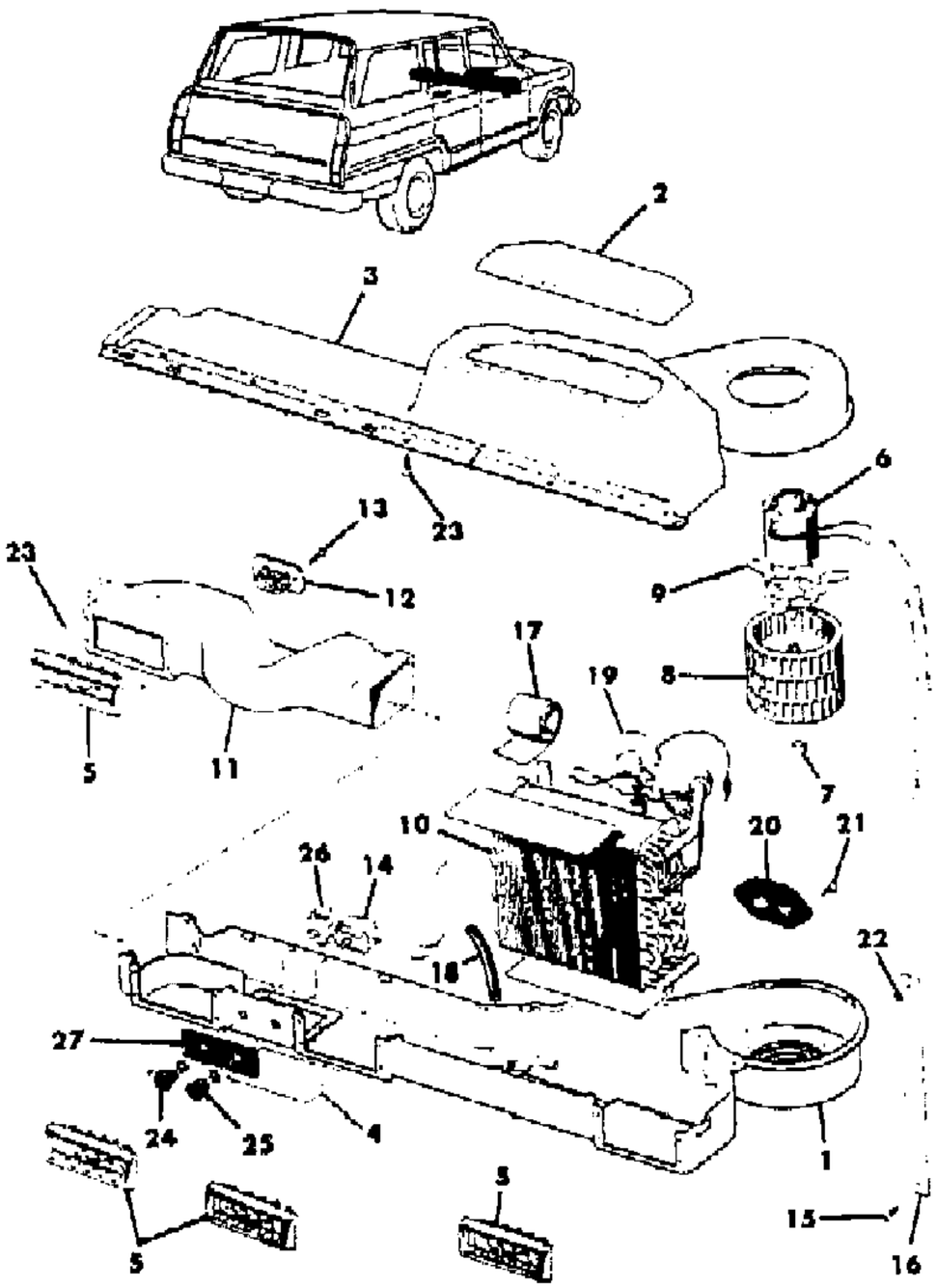

ITEM	PART NUMBER	QTY	BODY	MODEL	DESCRIPTION
1					HOUSING, Evaporator Lower
	J546 2743	1			1981-83: P.A.R.
	J576 3617	1			1983-85: P.A.R.
2	J546 9262	1			COVER, Evaporator Housing, P.A.R.
3					HOUSING, Evaporator Upper
	J546 9266	1			1981-85: P.A.R.
4	J546 9270	1			PLATE, P.A.R.
5	J546 9288	4			OUTLET, Air, Modification Required
6	J575 1834	1			MOTOR, Blower
7	J318 1643	1			CLAMP
8	J575 1934	1			WHEEL, Blower
9	J546 3811	1			BRACKET, Blower Motor Mounting
10	J813 4176	1			CORE, Evaporator
11					HOUSING ASSEMBLY, Extension ***
	J812 8414	1			1981: P.A.R.
	J813 4340	1			1982: P.A.R.
	J576 3621	1			1983-85
12					RESISTOR
	J374 1278	1			1983-85
13	J400 4566	2			SCREW
14	J546 4350	1			THERMOSTAT
15	J045 6334	1			SCREW
16	J545 5069	1			BRACKET, Mounting
17	J315 8337	1			INSULATION
18					TUBE, Drain
	J812 4493	1			10"
	J575 2862	1			12"
19	J546 4379	1			VALVE, Expansion
20	J318 5484	1			GROMMET
21	J941 4712	2			SCREW
22	J027 1172	1			NUT
23	J400 2311	AR			SCREW
24	J575 8382	1			KNOB, Blower Switch
25	J575 8383	1			KNOB, Temperature Control
26					SWITCH, Air Conditioning Blower
					Rheostat Type Switch; Lettering "HI-PC-OFF-LOW"
	J546 4338	1			1981-82
					3 Position Switch; Lettering "OFF-LOW-MED-HI"
	J576 3546	1			1983-85

MODEL CODES
16=Cherokee 2 Dr.(1981-83)
17=Cherokee 2 Dr.(1981-83)
73=Cherokee 2WD-2 Dr.(1984-86)
74=Cherokee 2WD-4 Dr.(1984-86)
18=Cherokee 4 Dr.(1981-83)
77=Cherokee 4WD-2 Dr.(1984-86)
78=Cherokee 4WD-4 Dr.(1984-86)
85=CJ-5 (1981-83)
86=CJ-6(1981)
87=CJ-7(1981-86)
88=CJ-8, Scrambler(1981-86)
64=Comanche 2WD-6 Ft. Box(1986)
66=Comanche 2WD-7 Ft. Box(1986)
63=Comanche 4WD-6 Ft. Box(1986)
65=Comanche 4WD-7 Ft. Box(1986)
15=Grand Wagoneer 4 Dr.(1984-86)
25=J-10 Truck 7 Ft. Box(1981-84)
26=J10 Truck 8 Ft. Box(1981-86)
27=J-20 Truck 8 Ft. Box(1981-86)
15=Wagoneer 4 Dr.(1981-83)
75=Wagoneer 4WD-4 Dr.(1984-86)

BODY
CJ=CJ-5, CJ-6, CJ-7, CJ-8, Scrambler(1981-86)
MJ=Comanche Pickup(1986)

STYLES
SJ=Wagoneer(1981-83), Grand Wagoneer(1984-86), Cherokee(1981-83), J-10, J-20(1981-86)
XJ=Wagoneer(1984-86), Cherokee(1984-86)

AR = Use as Required - = Non Illustrated Part P.A.R. = Paint as Required

« RETURN TO GROUP INDEX »

EVAPORATOR AND BLOWER, AIR CONDITIONING SJ CHEROKEE, SJ WAGONEER, J10, J20 1981-85
Figure 24-1600

81J24 1600

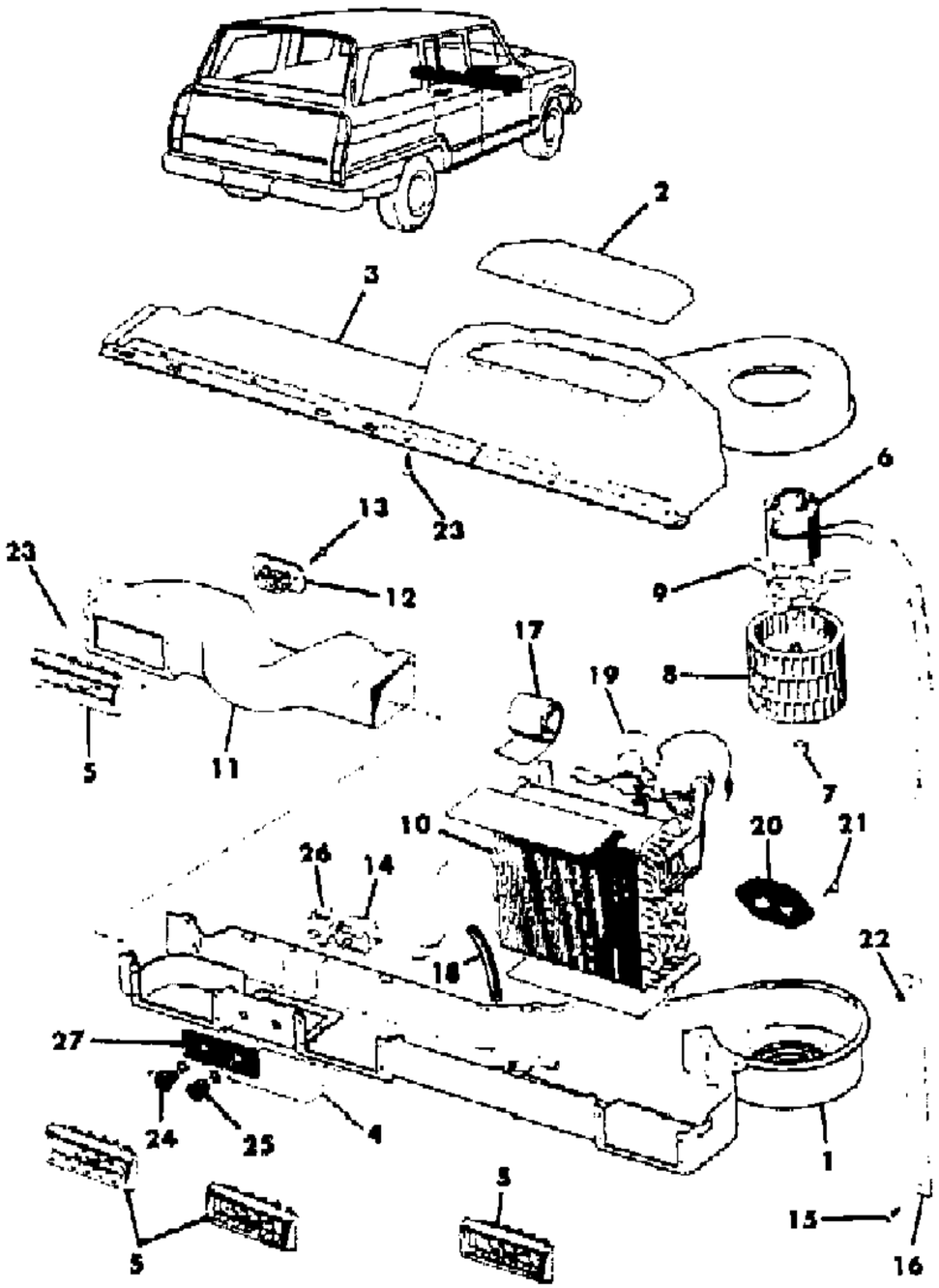

ITEM	PART NUMBER	QTY	BODY	MODEL	DESCRIPTION
27					PLATE
					Rheostat Type Switch; Lettering "HI-PC-OFF-LOW"
	J812 4487	1			1981-83
					3 Position Switch; Lettering "OFF-LOW-MED-HI"
	J576 4047	1			1984-85: Black
	J576 4721	1			1984: Dark Almond
	J576 4049	1			1984: Nutmeg
	J576 5346	1			1985: Garnet
	J576 5347	1			1985: Honey

MODEL CODES

16=Cherokee 2 Dr.(1981-83)	78=Cherokee 4WD-4 Dr.(1984-86)	64=Comanche 2WD-6 Ft. Box(1986)	25=J-10 Truck 7 Ft. Box(1981-84)
17=Cherokee 2 Dr.(1981-83)	85=CJ-5 (1981-83)	66=Comanche 2WD-7 Ft. Box(1986)	26=J10 Truck 8 Ft. Box(1981-86)
73=Cherokee 2WD-2 Dr.(1984-86)	86=CJ-6(1981)	63=Comanche 4WD-6 Ft. Box(1986)	27=J-20 Truck 8 Ft. Box(1981-86)
74=Cherokee 2WD-4 Dr.(1984-86)	87=CJ-7(1981-86)	65=Comanche 4WD-7 Ft. Box(1986)	15=Wagoneer 4 Dr.(1981-83)
18=Cherokee 4 Dr.(1981-83)	88=CJ-8, Scrambler(1981-86)	15=Grand Wagoneer 4 Dr.(1984-86)	75=Wagoneer 4WD-4 Dr.(1984-86)
77=Cherokee 4WD-2 Dr.(1984-86)			

BODY
CJ=CJ-5, CJ-6, CJ-7, CJ-8, Scrambler(1981-86)
MJ=Comanche Pickup(1986)

STYLES
SJ=Wagoneer(1981-83), Grand Wagoneer(1984-86), Cherokee(1981-83), J-10, J-20(1981-86)
XJ=Wagoneer(1984-86), Cherokee(1984-86)

AR = Use as Required - = Non Illustrated Part P.A.R. = Paint as Required

« RETURN TO GROUP INDEX

EVAPORATOR AND BLOWER, AIR CONDITIONING SJ CHEROKEE, SJ WAGONEER, J10, J20 1986
Figure 24-1700

81J24 1700

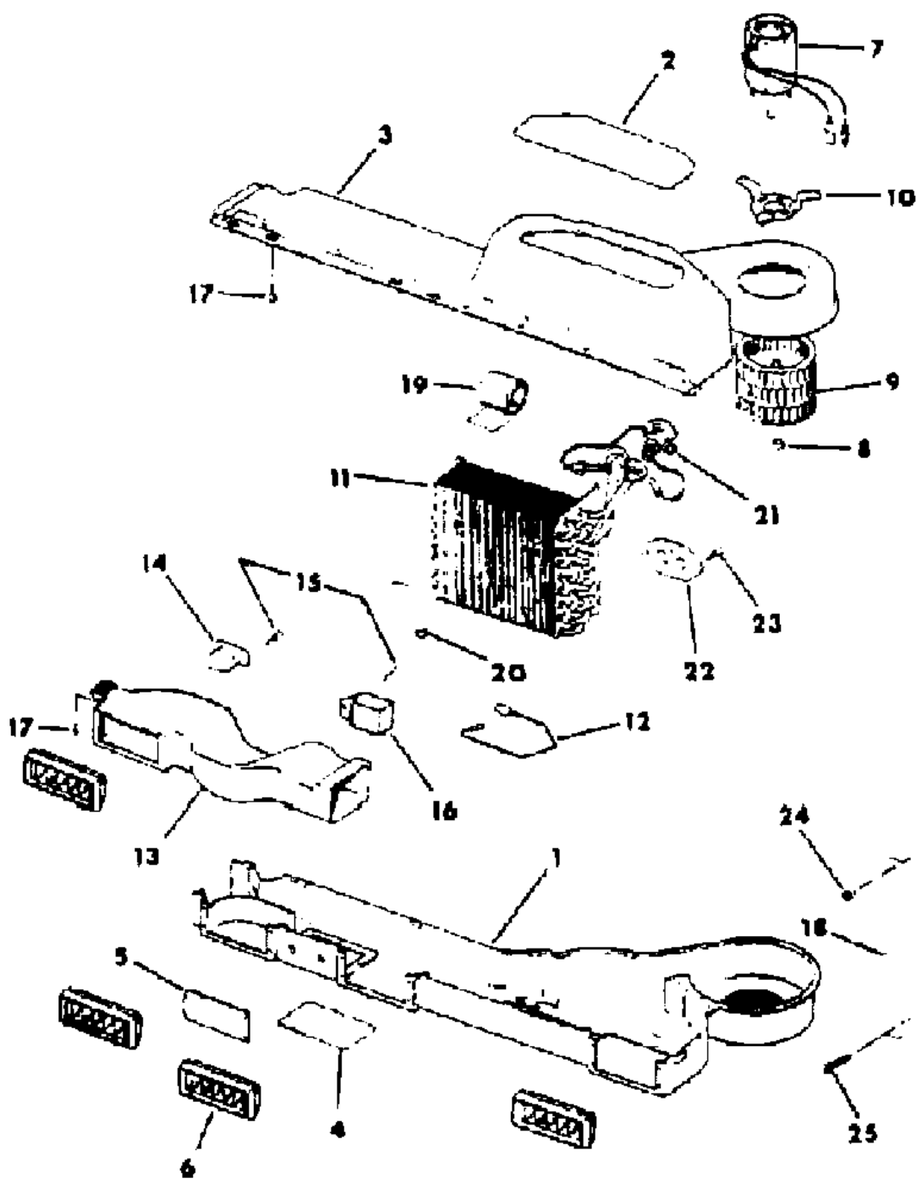

ITEM	PART NUMBER	QTY	BODY	MODEL	DESCRIPTION
1	5600 1789	1			HOUSING, Lower, P.A.R.
2	J546 9262	1			COVER, Housing, P.A.R.
3	J546 9266	1			HOUSING, Upper, P.A.R.
4	J546 9270	1			PLATE, P.A.R.
5	5600 1515	1			PLATE, P.A.R.
6	J546 9288	4			OUTLET, Air, P.A.R.
7	5600 2007	1			MOTOR, Blower
8	J318 1643	1			CLAMP
9	J575 1934	1			WHEEL, Blower
10	J546 3811	1			BRACKET, Motor
11	5600 1962	1			CORE, Evaporator
12	5600 2728	1			THERMISTOR ***
13	8350 2636	1			HOUSING, Extension, P.A.R.
14	5600 1516	1			RESISTOR
15	J400 4566	4			SCREW
16	5600 1959	1			THERMOSTAT
17	J400 2311	8			SCREW
18	J545 5069	1			BRACKET
19	J315 8337	1			INSULATION
20	J575 2862	1			TUBE, Drain
21	J546 4379	1			VALVE, Expansion
22	J318 5484	1			GROMMET
23	J941 4712	2			SCREW
24	J027 1172	1			NUT
25	J045 6334	1			SCREW

MODEL CODES
16=Cherokee 2 Dr.(1981-83)
17=Cherokee 2 Dr.(1981-83)
73=Cherokee 2WD-2 Dr.(1984-86)
74=Cherokee 2WD-4 Dr.(1984-86)
18=Cherokee 4 Dr.(1981-83)
77=Cherokee 4WD-2 Dr.(1984-86)
78=Cherokee 4WD-4 Dr.(1984-86)
85=CJ-5 (1981-83)
86=CJ-6(1981)
87=CJ-7(1981-86)
88=CJ-8, Scrambler(1981-86)
64=Comanche 2WD-6 Ft. Box(1986)
66=Comanche 2WD-7 Ft. Box(1986)
63=Comanche 4WD-6 Ft. Box(1986)
65=Comanche 4WD-7 Ft. Box(1986)
15=Grand Wagoneer 4 Dr.(1984-86)
25=J-10 Truck 7 Ft. Box(1981-84)
26=J10 Truck 8 Ft. Box(1981-86)
27=J-20 Truck 8 Ft. Box(1981-86)
15=Wagoneer 4 Dr.(1981-83)
75=Wagoneer 4WD-4 Dr.(1984-86)

BODY
CJ=CJ-5, CJ-6, CJ-7, CJ-8, Scrambler(1981-86)
MJ=Comanche Pickup(1986)

STYLES
SJ=Wagoneer(1981-83), Grand Wagoneer(1984-86), Cherokee(1981-83), J-10, J-20(1981-86)
XJ=Wagoneer(1984-86), Cherokee(1984-86)

AR = Use as Required - = Non Illustrated Part P.A.R. = Paint as Required

« RETURN TO GROUP INDEX

EVAPORATOR AND BLOWER, AIR CONDITIONING SJ CHEROKEE, SJ WAGONEER, J10, J20 RIGHT HAND DRIVE
Figure 24-1800

81J24 1800 A

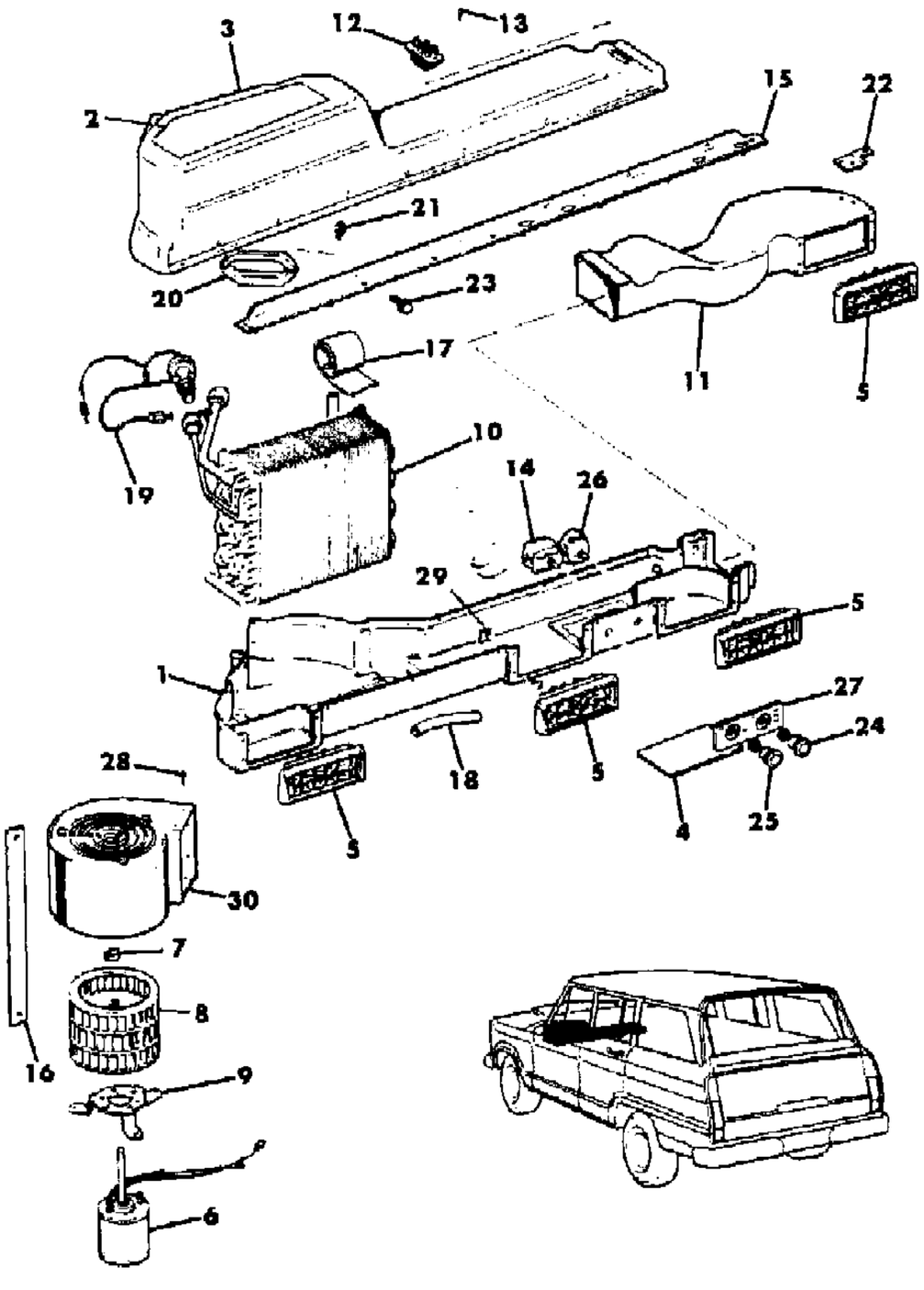

ITEM	PART NUMBER	QTY	BODY	MODEL	DESCRIPTION
1	J805 3180	1			HOUSING, Evaporator Lower, Modification Required
2	J546 9262	1			COVER, Evaporator Housing, P.A.R.
3	J805 3159	1			HOUSING, Evaporator Upper, Modification Required
4	J546 9270	1			PLATE, P.A.R.
5	J546 9288	4			OUTLET, Air, Modification Required
6	J575 1834	1			MOTOR, Blower
7	J318 0753	1			CLAMP
8	J575 1934	1			WHEEL, Blower
9	J546 3811	1			BRACKET, Blower Motor Mounting
10	J805 1888	1			CORE, Evaporator
11	J805 3170	1			HOUSING ASSEMBLY, Extension ***
12	J374 1278	1			RESISTOR
13	J400 4566	2			SCREW
14	J546 4350	1			THERMOSTAT
15	J805 1236	1			BRACKET
16	J545 5069	1			BRACKET, Mounting
17	J315 8337	1			INSULATION
18	J575 2862	1			TUBE, Drain
19	J546 4379	1			VALVE, Expansion
20	J318 5484	1			GROMMET
21	J941 4712	2			SCREW
22	J805 1243	1			BRACKET
23	J400 2311	AR			SCREW
24	J575 8382	1			KNOB, Blower Switch
25	J575 8383	1			KNOB, Temperature Control
26	J576 3546	1			SWITCH, Air Conditioning Blower
27					PLATE
	J576 4047	1			1984-85: Black
	J576 4721	1			1984: Dark Almond
	J576 4049	1			1984: Nutmeg
	J576 5346	1			1985: Garnet
	J576 5347	1			1985: Honey
28	S016 1895	1			SCREW
29	J400 0383	9			NUT
30	J805 1233	1			HOUSING, Blower/Evaporator

MODEL CODES

16=Cherokee 2 Dr.(1981-83)
17=Cherokee 2 Dr.(1981-83)
73=Cherokee 2WD-2 Dr.(1984-86)
74=Cherokee 2WD-4 Dr.(1984-86)
18=Cherokee 4 Dr.(1981-83)
77=Cherokee 4WD-2 Dr.(1984-86)
78=Cherokee 4WD-4 Dr.(1984-86)
85=CJ-5 (1981-83)
86=CJ-6(1981)
87=CJ-7(1981-86)
88=CJ-8, Scrambler(1981-86)
64=Comanche 2WD-6 Ft. Box(1986)
66=Comanche 2WD-7 Ft. Box(1986)
63=Comanche 4WD-6 Ft. Box(1986)
65=Comanche 4WD-7 Ft. Box(1986)
15=Grand Wagoneer 4 Dr.(1984-86)
25=J-10 Truck 7 Ft. Box(1981-84)
26=J10 Truck 8 Ft. Box(1981-86)
27=J-20 Truck 8 Ft. Box(1981-86)
15=Wagoneer 4 Dr.(1981-83)
75=Wagoneer 4WD-4 Dr.(1984-86)

BODY
CJ=CJ-5, CJ-6, CJ-7, CJ-8, Scrambler(1981-86)
MJ=Comanche Pickup(1986)

STYLES
SJ=Wagoneer(1981-83), Grand Wagoneer(1984-86), Cherokee(1981-83), J-10, J-20(1981-86)
XJ=Wagoneer(1984-86), Cherokee(1984-86)

AR = Use as Required - = Non Illustrated Part P.A.R. = Paint as Required

« RETURN TO GROUP INDEX

EVAPORATOR AND BLOWER, AIR CONDITIONING WITH AMERICAN AIR CONDITIONING SJ CHEROKEE, SJ WAGONEER, J10, J20
Figure 24-1900

81J24 1900

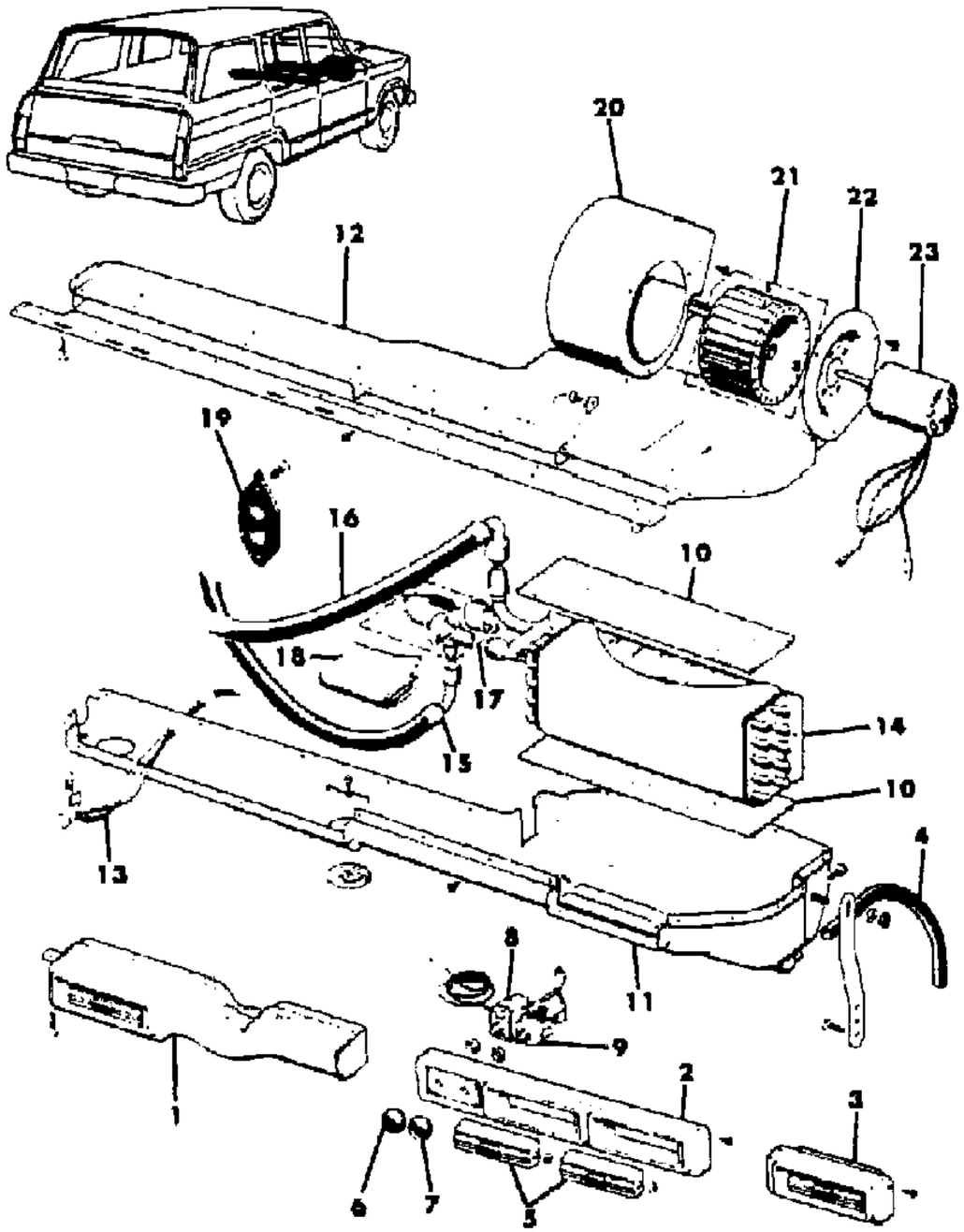

ITEM	PART NUMBER	QTY	BODY	MODEL	DESCRIPTION
1	J812 9278	1			HOUSING ASSEMBLY, Extension ***
2	J812 9276	1			OUTLET, Air
3	J812 9277	1			OUTLET, Air
4	J812 1902	1			TUBE, Drain
5	J812 7561	3			LOUVER, Air Outlet
6	J813 3711	1			KNOB
7	J813 3710	1			KNOB
8	J812 1841	1			THERMOSTAT
9	J812 1837	1			SWITCH
10	J812 1893	2			SCREEN
11	J812 9275	1			HOUSING, Evaporator, Lower
12	J812 9274	1			HOUSING, Evaporator Upper
13					HARNESS, Wire
	J812 1886	1			1981-82
	8351 0199	1			1983-86
14	J812 5403	1			CORE, Evaporator
15	J812 5777	1			HOSE, Receiver To Evaporator
16	J812 5776	1			HOSE, Receiver To Evaporator
17	J812 1823	1			VALVE, Expansion
18	J812 1914	1			INSULATION
19	J812 7564	2			GROMMET
20	J812 1907	1			HOUSING, Blower Motor
21	J812 1898	1			WHEEL, Blower Motor
22	J812 1865	1			PLATE, Blower Motor Mounting
23	J812 6691	1			MOTOR, Blower

MODEL CODES

16=Cherokee 2 Dr.(1981-83)
17=Cherokee 2 Dr.(1981-83)
73=Cherokee 2WD-2 Dr.(1984-86)
74=Cherokee 2WD-4 Dr.(1984-86)
18=Cherokee 4 Dr.(1981-83)
77=Cherokee 4WD-2 Dr.(1984-86)
78=Cherokee 4WD-4 Dr.(1984-86)
85=CJ-5 (1981-83)
86=CJ-6(1981)
87=CJ-7(1981-86)
88=CJ-8, Scrambler(1981-86)
64=Comanche 2WD-6 Ft. Box(1986)
66=Comanche 2WD-7 Ft. Box(1986)
63=Comanche 4WD-6 Ft. Box(1986)
65=Comanche 4WD-7 Ft. Box(1986)
15=Grand Wagoneer 4 Dr.(1984-86)
25=J-10 Truck 7 Ft. Box(1981-84)
26=J10 Truck 8 Ft. Box(1981-86)
27=J-20 Truck 8 Ft. Box(1981-86)
15=Wagoneer 4 Dr.(1981-83)
75=Wagoneer 4WD-4 Dr.(1984-86)

BODY
CJ=CJ-5, CJ-6, CJ-7, CJ-8, Scrambler(1981-86)
MJ=Comanche Pickup(1986)

STYLES
SJ=Wagoneer(1981-83), Grand Wagoneer(1984-86), Cherokee(1981-83), J-10, J-20(1981-86)
XJ=Wagoneer(1984-86), Cherokee(1984-86)

AR = Use as Required - = Non Illustrated Part P.A.R. = Paint as Required

« RETURN TO GROUP INDEX

RECEIVER/DRIER AND HOSES WITH FACTORY AIR CONDITIONING CJ-5,6,7,8, SCRAMBLER
Figure 24-2000

81J24 2000

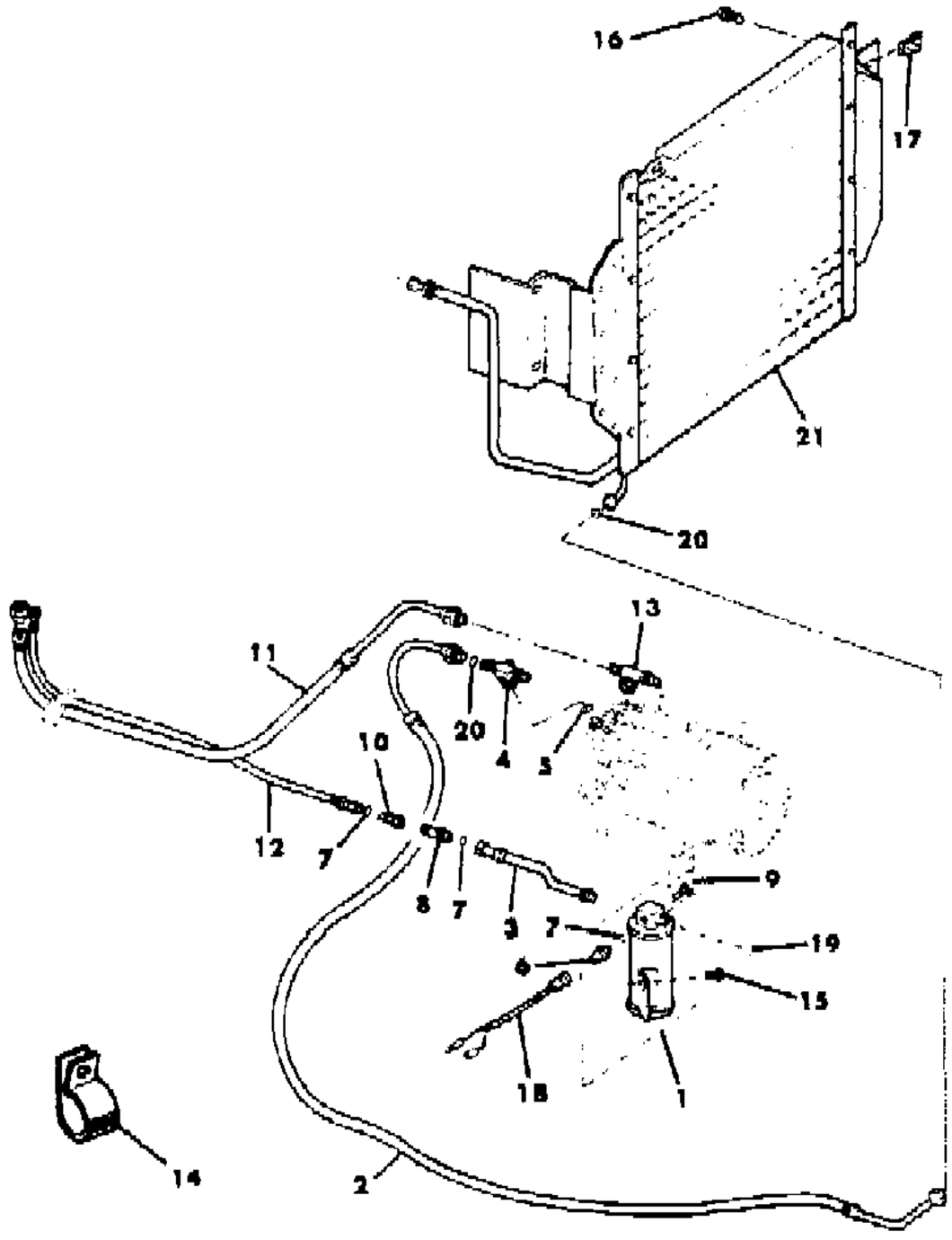

ITEM	PART NUMBER	QTY	BODY	MODEL	DESCRIPTION
1					RECEIVER/DRIER ***
	J812 8141	1			1981: Without Low Pressure Switch
	J813 4556	1			1982-86: With Low Pressure Switch
2					HOSE, Compressor To Condenser
	J812 8143	1			1981: Eight Cylinder
	J812 8143	1			1981: Six Cylinder, Vehicle Serial #000001 thru #020211
	J813 4554	1			1981: Six Cylinder, Vehicle Serial #020212 and higher
	J813 4554	1			1982-86
3					HOSE, Receiver To Quick Coupling
	J812 8142	1			1981: Eight Cylinder
	J812 8142	1			1981: Six Cylinder, Vehicle Serial #000001 thru #020211
	J813 3894	1			1981: Six Cylinder, Vehicle Serial #020212 and af ter
	J813 3894	1			1982-86
4	J545 9856	1			VALVE, Discharge
5	J322 2353	1			O-RING
6	J813 4555	1			SWITCH, Low Pressure Cut-Out
7	J317 1788	AR			O-RING
8	J317 1794	1			COUPLING, Male ***
9	J369 2994	1			VALVE PACKAGE, Relief ***
10	J317 1795	1			COUPLING, Female ***
11	J812 8136	1			HOSE, Evaporator To Compressor
12	J812 8137	1			HOSE, Quick Coupling To Evaporator
13	J545 9857	1			VALVE, Suction
14	S012 0530	1			CLIP
15	J941 4721	2			SCREW
16	J400 4648	2			SCREW
17	J096 8861	2			NUT, U-Type
18	J576 3596	1			WIRE, Low Freon
19	J321 2113	2			O-RING
20	J321 2112	2			O-RING
21					CORE, Condenser
	J812 8140	1			1981: Eight Cylinder
	J812 8140	1			1981: Six Cylinder, Vehicle Serial #000001 thru #020211
	J813 3893	1			1981: Six Cylinder, Vehicle Serial #020212 and higher
	J813 3893	1			1982-86

MODEL CODES

16=Cherokee 2 Dr.(1981-83)
17=Cherokee 2 Dr.(1981-83)
73=Cherokee 2WD-2 Dr.(1984-86)
74=Cherokee 2WD-4 Dr.(1984-86)
18=Cherokee 4 Dr.(1981-83)
77=Cherokee 4WD-2 Dr.(1984-86)
78=Cherokee 4WD-4 Dr.(1984-86)
85=CJ-5 (1981-83)
86=CJ-6(1981)
87=CJ-7(1981-86)
88=CJ-8, Scrambler(1981-86)
64=Comanche 2WD-6 Ft. Box(1986)
66=Comanche 2WD-7 Ft. Box(1986)
63=Comanche 4WD-6 Ft. Box(1986)
65=Comanche 4WD-7 Ft. Box(1986)
15=Grand Wagoneer 4 Dr.(1984-86)
25=J-10 Truck 7 Ft. Box(1981-84)
26=J10 Truck 8 Ft. Box(1981-86)
27=J-20 Truck 8 Ft. Box(1981-86)
15=Wagoneer 4 Dr.(1981-83)
75=Wagoneer 4WD-4 Dr.(1984-86)

BODY
CJ=CJ-5, CJ-6, CJ-7, CJ-8, Scrambler(1981-86)
MJ=Comanche Pickup(1986)

STYLES
SJ=Wagoneer(1981-83), Grand Wagoneer(1984-86), Cherokee(1981-83), J-10, J-20(1981-86)
XJ=Wagoneer(1984-86), Cherokee(1984-86)

AR = Use as Required - = Non Illustrated Part P.A.R. = Paint as Required

« RETURN TO GROUP INDEX

RECEIVER/DRIER AND HOSES WITH AMERICAN AIR CONDITIONING CJ-5,6,7,8, SCRAMBLER
Figure 24-2100

81J24 2100

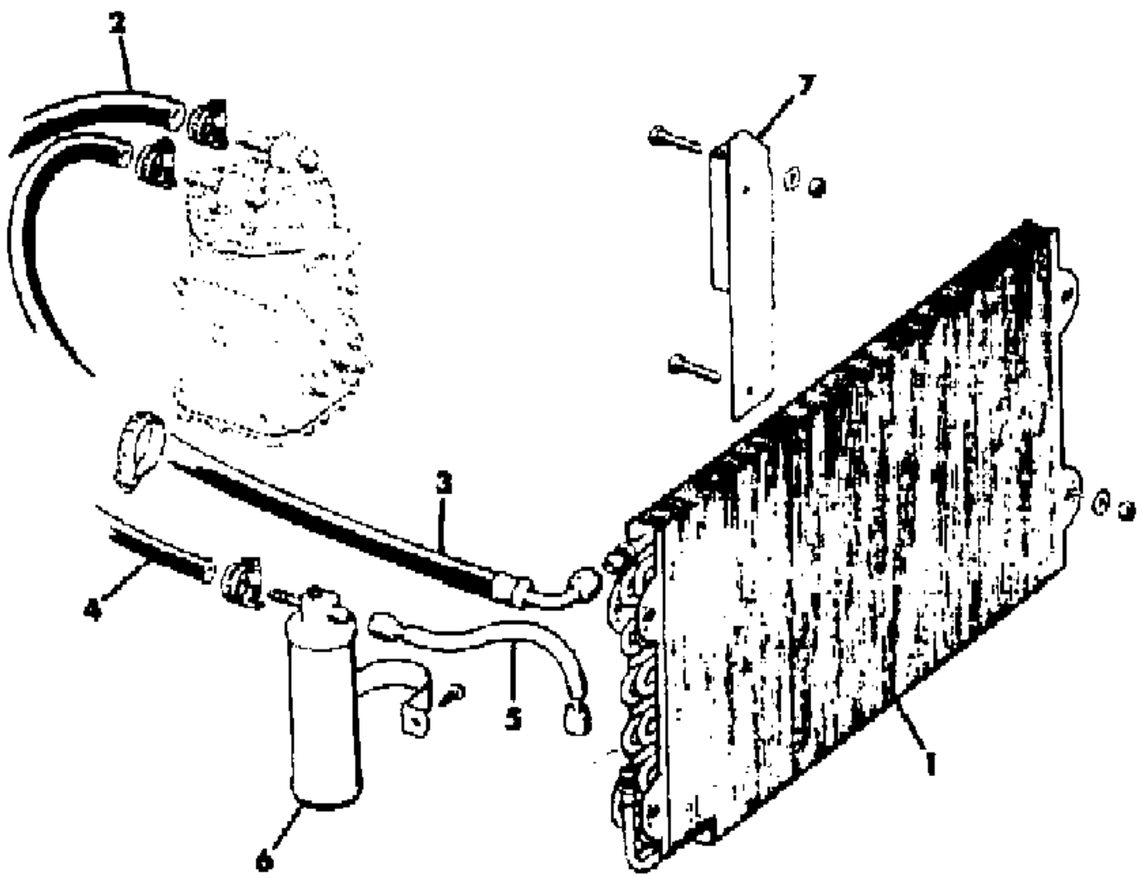

ITEM	PART NUMBER	QTY	BODY	MODEL	DESCRIPTION
1					CORE, Condenser
	J812 1846	1			Four Cylinder, Eight Cylinder
	J813 3893	1			Six Cylinder
2					HOSE, Evaporator To Compressor
	J812 7562	1			1981-82: Six Cylinder, Eight Cylinder
	J813 2922	1			1981-82: Four Cylinder
	8350 2676	1			1983-86
3					HOSE, Compressor To Condenser
	J812 9014	1			1981-82: Six Cylinder, Eight Cylinder
	J813 2923	1			1981-82: Four Cylinder
	8350 2677	1			1983-86
4					HOSE, Receiver To Evaporator
	J812 7563	1			1981: Six Cylinder, Vehicle Serial #000001 thru #020211
	J813 3905	1			1981: Six Cylinder, Vehicle Serial #020212 and higher
	J813 3905	1			1982: Six Cylinder
	J812 7563	1			1981-82: Eight Cylinder
	J813 2924	1			1981-82: Four Cylinder
	8350 2105	1			1983-86
5	J812 9542	1			TUBE, Condenser To Receiver
6					RECEIVER/DRIER ***
	J812 1825	1			1981-82: Four Cylinder, Eight Cylinder
	J812 1825	1			1981: Six Cylinder, Vehicle Serial #000001 thru #020211
	J812 8141	1			1981: Six Cylinder, Vehicle Serial #020212 and higher
	J812 8141	1			1982: Six Cylinder
	8350 2535	1			1983-86
7					BRACKET, Condenser
	J813 2925	1			1981: Six Cylinder, Vehicle Serial #000001 thru #020211
	J813 2926	1			1981: Six Cylinder, Vehicle Serial #020212 and higher
	J813 2926	1			1982-86

MODEL CODES

16=Cherokee 2 Dr.(1981-83)	78=Cherokee 4WD-4 Dr.(1984-86)	64=Comanche 2WD-6 Ft. Box(1986)	25=J-10 Truck 7 Ft. Box(1981-84)
17=Cherokee 2 Dr.(1981-83)	85=CJ-5 (1981-83)	66=Comanche 2WD-7 Ft. Box(1986)	26=J10 Truck 8 Ft. Box(1981-86)
73=Cherokee 2WD-2 Dr.(1984-86)	86=CJ-6(1981)	63=Comanche 4WD-6 Ft. Box(1986)	27=J-20 Truck 8 Ft. Box(1981-86)
74=Cherokee 2WD-4 Dr.(1984-86)	87=CJ-7(1981-86)	65=Comanche 4WD-7 Ft. Box(1986)	15=Wagoneer 4 Dr.(1981-83)
18=Cherokee 4 Dr.(1981-83)	88=CJ-8, Scrambler(1981-86)	15=Grand Wagoneer 4 Dr.(1984-86)	75=Wagoneer 4WD-4 Dr.(1984-86)
77=Cherokee 4WD-2 Dr.(1984-86)			

BODY
CJ=CJ-5, CJ-6, CJ-7, CJ-8, Scrambler(1981-86)
MJ=Comanche Pickup(1986)

STYLES
SJ=Wagoneer(1981-83), Grand Wagoneer(1984-86), Cherokee(1981-83), J-10, J-20(1981-86)
XJ=Wagoneer(1984-86), Cherokee(1984-86)

AR = Use as Required - = Non Illustrated Part P.A.R. = Paint as Required

« RETURN TO GROUP INDEX

RECEIVER/DRIER AND HOSES 2.5L FOUR AND 2.8L SIX CYLINDER XJ CHEROKEE, XJ WAGONEER, COMANCHE
Figure 24-2200

81J24 2200

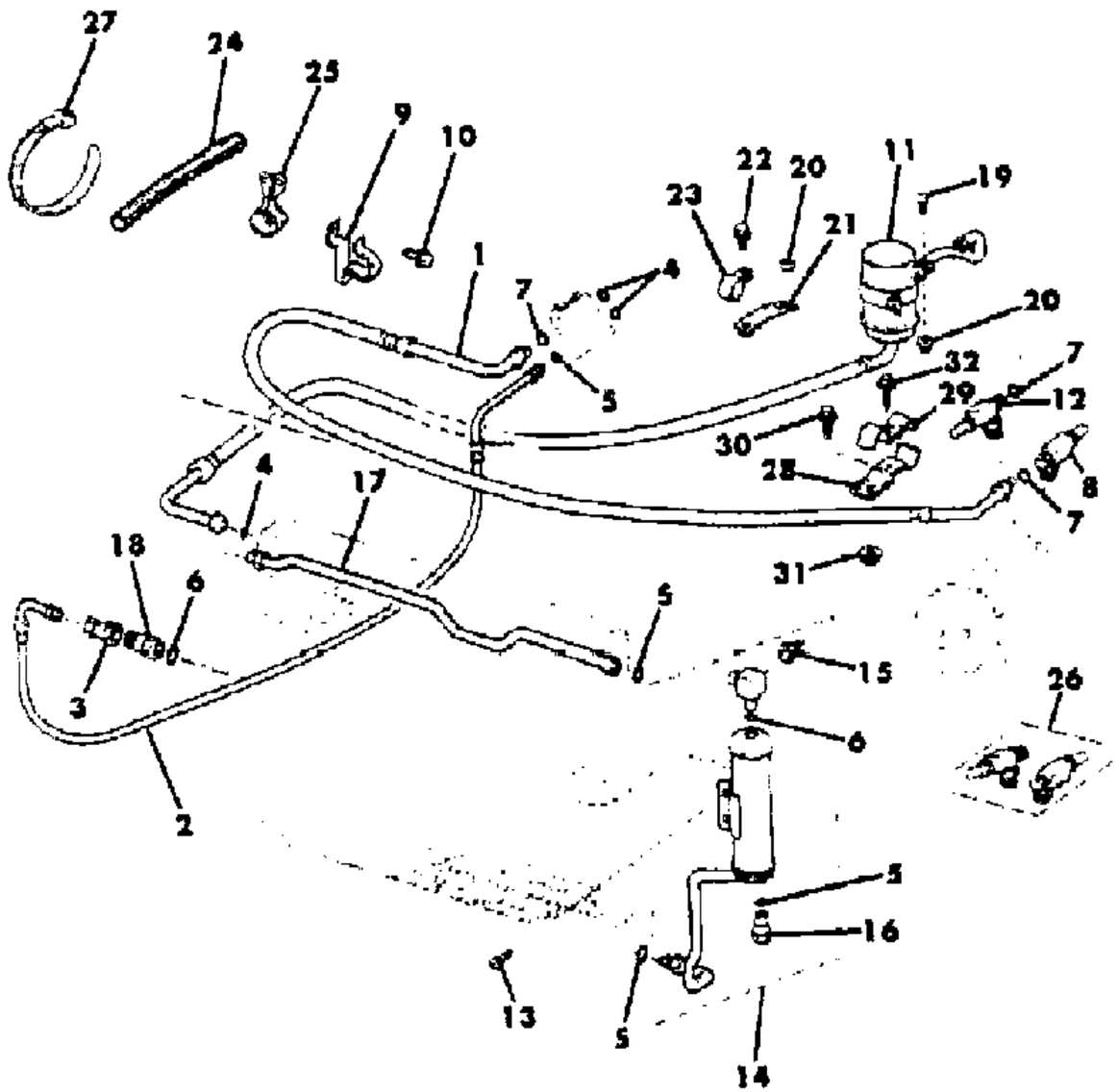

ITEM	PART NUMBER	QTY	BODY	MODEL	DESCRIPTION
-					CONDENSER
	5600 0230	1			w/Factory Air
	8350 1909	1			w/American Air
1					HOSE, Evaporator To Compressor
					Four Cylinder
					With Factory Air Conditioning
	5600 0213	1			1984-85
	5600 1781	1			1986
	8350 1975	1			With American Air Conditioning
					Six Cylinder
	5600 0878	1			With Factory Air Conditioning
	8350 1915	1			With American Air Conditioning
2					HOSE, Receiver To Evaporator
					Four Cylinder
					With Factory Air Conditioning
	5600 0217	1			1984-85
	5600 1782	1			1986
	8350 1913	1			With American Air Conditioning
					Six Cylinder
	5600 0217	1			With Factory Air Coditioning
	8350 1913	1			With American Air Conditioning
3	J317 1795	1			COUPLING, Female ***
4	J321 2112	3			O-RING
5	J321 2113	4			O-RING
6	J317 1788	2			O-RING
7	J322 2353	3			O-RING
8					VALVE, Suction
					Four Cylinder
	3600 0454	1			1984-85
	5600 0879	1			1986
	5600 0879	1			Six Cylinder
9	5600 0712	1			BRACKET
10	3420 1489	1			SCREW
11					HOSE, Compressor To Condenser
					Four Cylinder
	5300 1438	1			With Factory Air Conditioning
	8350 1976	1			With American Air Conditioning
					Six Cylinder
	5300 1095	1			With Factory Air Conditioning

MODEL CODES

16=Cherokee 2 Dr.(1981-83)
17=Cherokee 2 Dr.(1981-83)
73=Cherokee 2WD-2 Dr.(1984-86)
74=Cherokee 2WD-4 Dr.(1984-86)
18=Cherokee 4 Dr.(1981-83)
77=Cherokee 4WD-2 Dr.(1984-86)
78=Cherokee 4WD-4 Dr.(1984-86)
85=CJ-5 (1981-83)
86=CJ-6(1981)
87=CJ-7(1981-86)
88=CJ-8, Scrambler(1981-86)
64=Comanche 2WD-6 Ft. Box(1986)
66=Comanche 2WD-7 Ft. Box(1986)
63=Comanche 4WD-6 Ft. Box(1986)
65=Comanche 4WD-7 Ft. Box(1986)
15=Grand Wagoneer 4 Dr.(1984-86)
25=J-10 Truck 7 Ft. Box(1981-84)
26=J10 Truck 8 Ft. Box(1981-86)
27=J-20 Truck 8 Ft. Box(1981-86)
15=Wagoneer 4 Dr.(1981-83)
75=Wagoneer 4WD-4 Dr.(1984-86)

BODY
CJ=CJ-5, CJ-6, CJ-7, CJ-8, Scrambler(1981-86)
MJ=Comanche Pickup(1986)

STYLES
SJ=Wagoneer(1981-83), Grand Wagoneer(1984-86), Cherokee(1981-83), J-10, J-20(1981-86)
XJ=Wagoneer(1984-86), Cherokee(1984-86)

AR = Use as Required - = Non Illustrated Part P.A.R. = Paint as Required

RECEIVER/DRIER AND HOSES 2.5L FOUR AND 2.8L SIX CYLINDER XJ CHEROKEE, XJ WAGONEER, COMANCHE
Figure 24-2200

81J24 2200

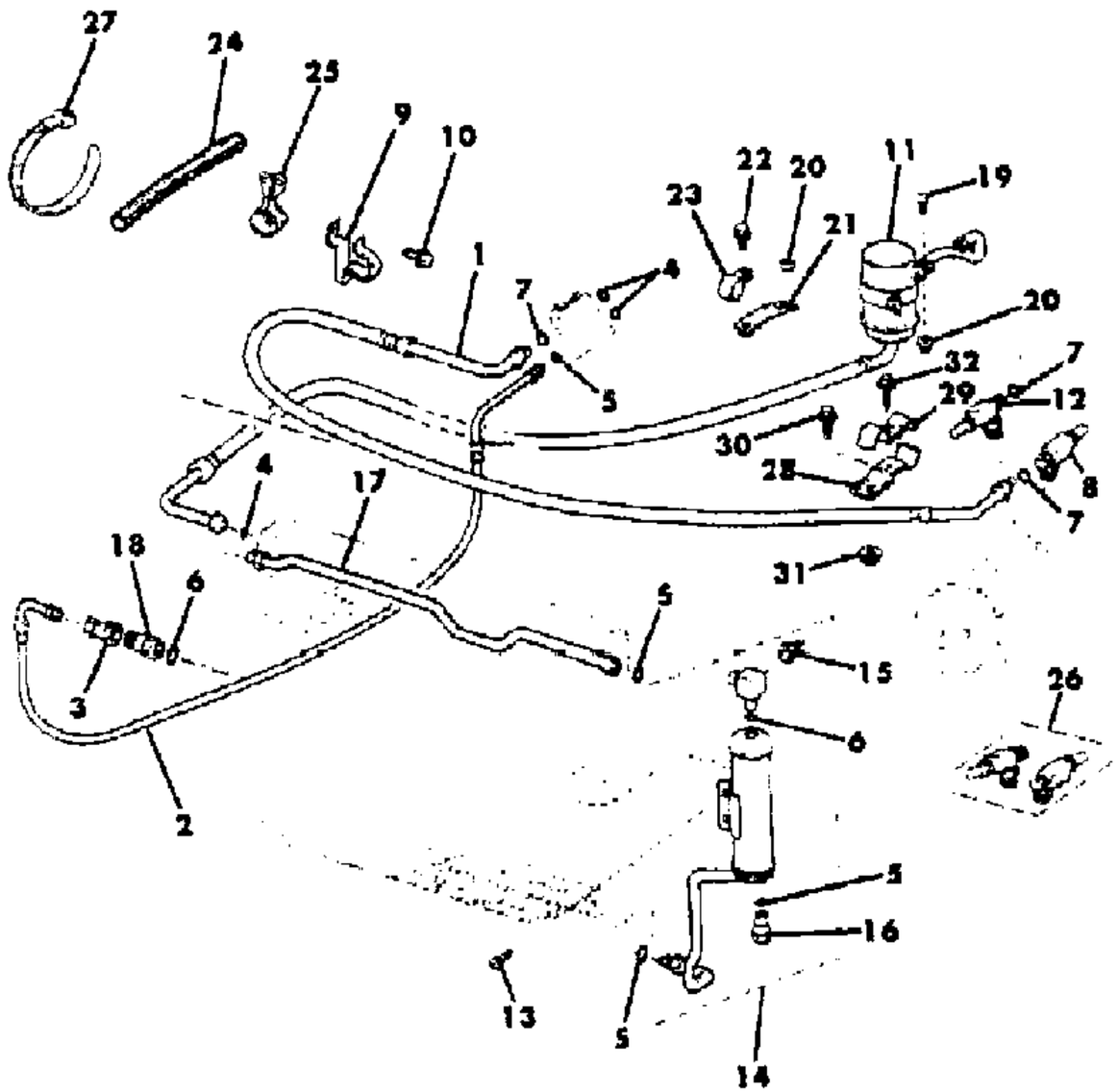

ITEM	PART NUMBER	QTY	BODY	MODEL	DESCRIPTION
	8350 1916	1			With American Air Conditioning
12					VALVE, Discharge
	3200 0262	1			Four Cylinder
	5300 0573	1			Six Cylinder
13	J812 0054	2			SCREW
14					RECEIVER/DRIER ***
	5600 0687	1			With Factory Air Conditioning
	8350 1910	1			With American Air Conditioning
15	J374 1260	1			SWITCH, Cut-Off
16	J369 2994	1			VALVE PACKAGE, Relief ***
17					TUBE, Receiver
	5600 0688	1			With Factory Air Conditioning
	8350 1911	1			With American Air Conditioning
18	J317 1794	1			COUPLING, Male ***
19					BOLT
	J420 0446	1			Four Cylinder
20					NUT
	1150 1850	2			Four Cylinder
21					STRAP
	J324 2927	1			Four Cylinder
22					BOLT
	3420 1897	1			Four Cylinder
23					CLIP
	J372 8150	1			Four Cylinder
24					PROTECTOR, Hose
	8350 1974	1			With American Air Conditioning
25					CLAMP
	8350 1977	1			With American Air Conditioning
26					VALVE PACKAGE, Suction And Discharge ***
	8350 2083	1			With American Air Conditioning
27	J322 3227	1			STRAP
28					BRACKET
	5600 1171	1			Six Cylinder
29					CLIP
	5600 1172	1			Six Cylinder
30	3420 1756	1			BOLT
31	3420 1246	1			NUT
32	3420 1362	1			SCREW

MODEL CODES

16=Cherokee 2 Dr.(1981-83)
17=Cherokee 2 Dr.(1981-83)
73=Cherokee 2WD-2 Dr.(1984-86)
74=Cherokee 2WD-4 Dr.(1984-86)
18=Cherokee 4 Dr.(1981-83)
77=Cherokee 4WD-2 Dr.(1984-86)
78=Cherokee 4WD-4 Dr.(1984-86)
85=CJ-5 (1981-83)
86=CJ-6(1981)
87=CJ-7(1981-86)
88=CJ-8, Scrambler(1981-86)
64=Comanche 2WD-6 Ft. Box(1986)
66=Comanche 2WD-7 Ft. Box(1986)
63=Comanche 4WD-6 Ft. Box(1986)
65=Comanche 4WD-7 Ft. Box(1986)
15=Grand Wagoneer 4 Dr.(1984-86)
25=J-10 Truck 7 Ft. Box(1981-84)
26=J10 Truck 8 Ft. Box(1981-86)
27=J-20 Truck 8 Ft. Box(1981-86)
15=Wagoneer 4 Dr.(1981-83)
75=Wagoneer 4WD-4 Dr.(1984-86)

BODY
CJ=CJ-5, CJ-6, CJ-7, CJ-8, Scrambler(1981-86)
MJ=Comanche Pickup(1986)

STYLES
SJ=Wagoneer(1981-83), Grand Wagoneer(1984-86), Cherokee(1981-83), J-10, J-20(1981-86)
XJ=Wagoneer(1984-86), Cherokee(1984-86)

AR = Use as Required - = Non Illustrated Part P.A.R. = Paint as Required

« RETURN TO GROUP INDEX

RECEIVER/DRIER AND HOSES 2.1L DIESEL XJ CHEROKEE, XJ WAGONEER, COMANCHE
Figure 24-2300

81J24 2300

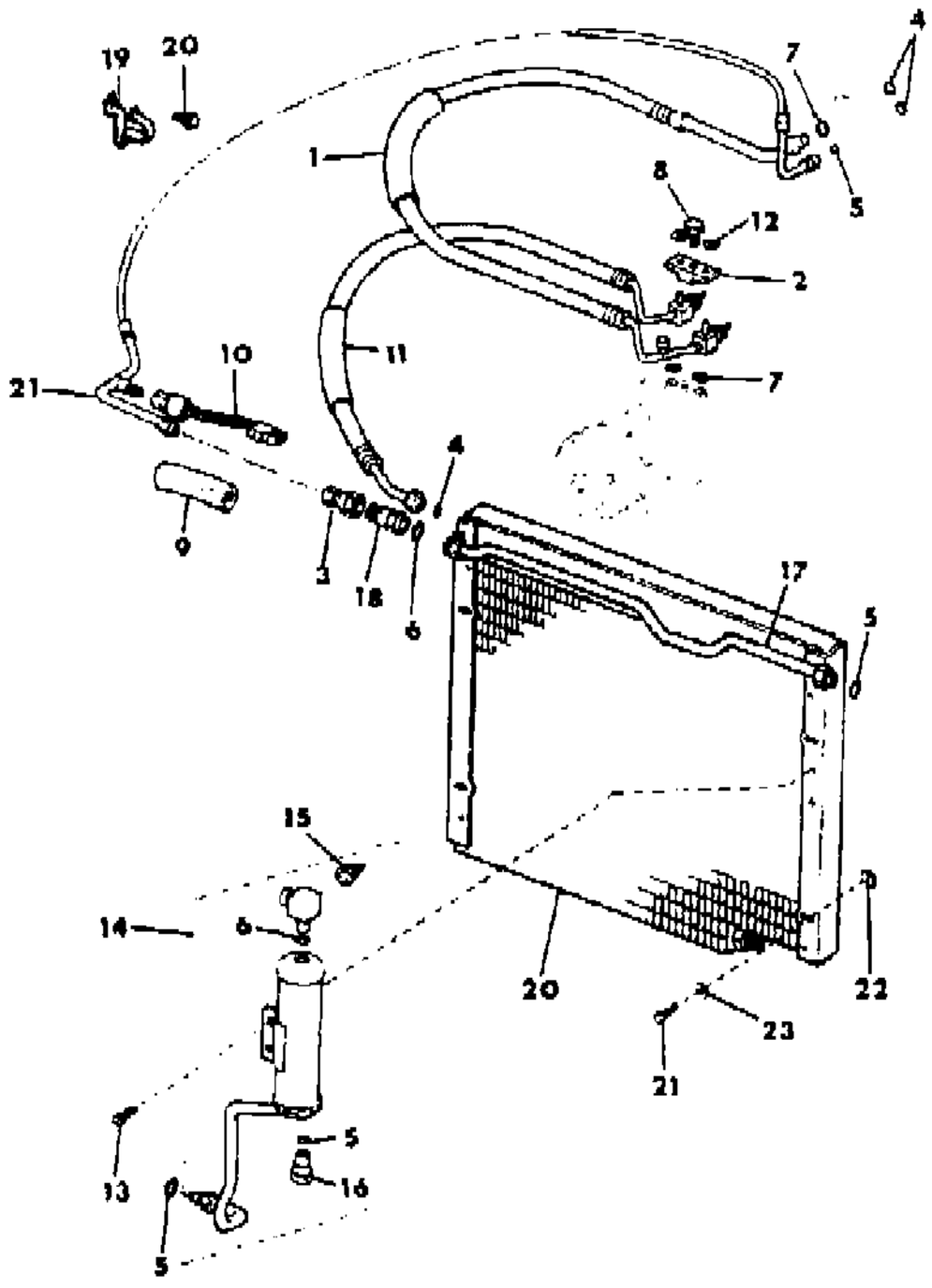

ITEM	PART NUMBER	QTY	BODY	MODEL	DESCRIPTION
1	5600 1273	1			HOSE AND VALVE ASSEMBLY, Evaporator To Compressor ***
2	5600 1403	1			RETAINER, Valve
3	J317 1795	1			COUPLING, Female ***
4	J321 2112	3			O-RING
5	J321 2113	4			O-RING
6	J317 1788	2			O-RING
7	J322 2353	3			O-RING
8	3420 2171	1			SCREW
9	J369 3082	1			INSULATOR, Modification Required
10					SWITCH, Cut-Off
	5600 1310	1			With Factory Air Conditioning
	8350 2595	1			With American Air Conditioning
11					HOSE AND VALVE ASSEMBLY, Compressor To Condenser ***
	5300 1482	1			With Factory Air Conditioning
	5600 1955	1			With American Air Conditioning
12	J400 6866	2			NUT, Push
13	J812 0054	2			SCREW
14	5600 0687	1			RECEIVER/DRIER ***
15	J374 1260	1			SWITCH, Cut-Off
16	J369 2994	1			VALVE PACKAGE, Relief ***
17	5600 0688	1			TUBE, Receiver
18	J317 1794	1			COUPLING, Male ***
19	5600 0712	1			BRACKET, Hose Mounting
20	5600 0230	1			CONDENSER
	3420 1489	AR			SCREW
21					HOSE, Receiver To Evaporator
	5600 1274	1			With Factory Air Conditioning
	8350 1913	1			With American Air Conditioning
22	1150 0660	AR			NUT
23	1150 0323	AR			WASHER

MODEL CODES

16=Cherokee 2 Dr.(1981-83)	78=Cherokee 4WD-4 Dr.(1984-86)	64=Comanche 2WD-6 Ft. Box(1986)	25=J-10 Truck 7 Ft. Box(1981-84)
17=Cherokee 2 Dr.(1981-83)	85=CJ-5 (1981-83)	66=Comanche 2WD-7 Ft. Box(1986)	26=J10 Truck 8 Ft. Box(1981-86)
73=Cherokee 2WD-2 Dr.(1984-86)	86=CJ-6(1981)	63=Comanche 4WD-6 Ft. Box(1986)	27=J-20 Truck 8 Ft. Box(1981-86)
74=Cherokee 2WD-4 Dr.(1984-86)	87=CJ-7(1981-86)	65=Comanche 4WD-7 Ft. Box(1986)	15=Wagoneer 4 Dr.(1981-83)
18=Cherokee 4 Dr.(1981-83)	88=CJ-8, Scrambler(1981-86)	15=Grand Wagoneer 4 Dr.(1984-86)	75=Wagoneer 4WD-4 Dr.(1984-86)
77=Cherokee 4WD-2 Dr.(1984-86)			

BODY
CJ=CJ-5, CJ-6, CJ-7, CJ-8, Scrambler(1981-86)
MJ=Comanche Pickup(1986)

STYLES
SJ=Wagoneer(1981-83), Grand Wagoneer(1984-86), Cherokee(1981-83), J-10, J-20(1981-86)
XJ=Wagoneer(1984-86), Cherokee(1984-86)

AR = Use as Required - = Non Illustrated Part P.A.R. = Paint as Required

« RETURN TO GROUP INDEX

VACUUM LINES, AIR CONDITIONING XJ CHEROKEE, XJ WAGONEER COMANCHE
Figure 24-2400

81J24 2400

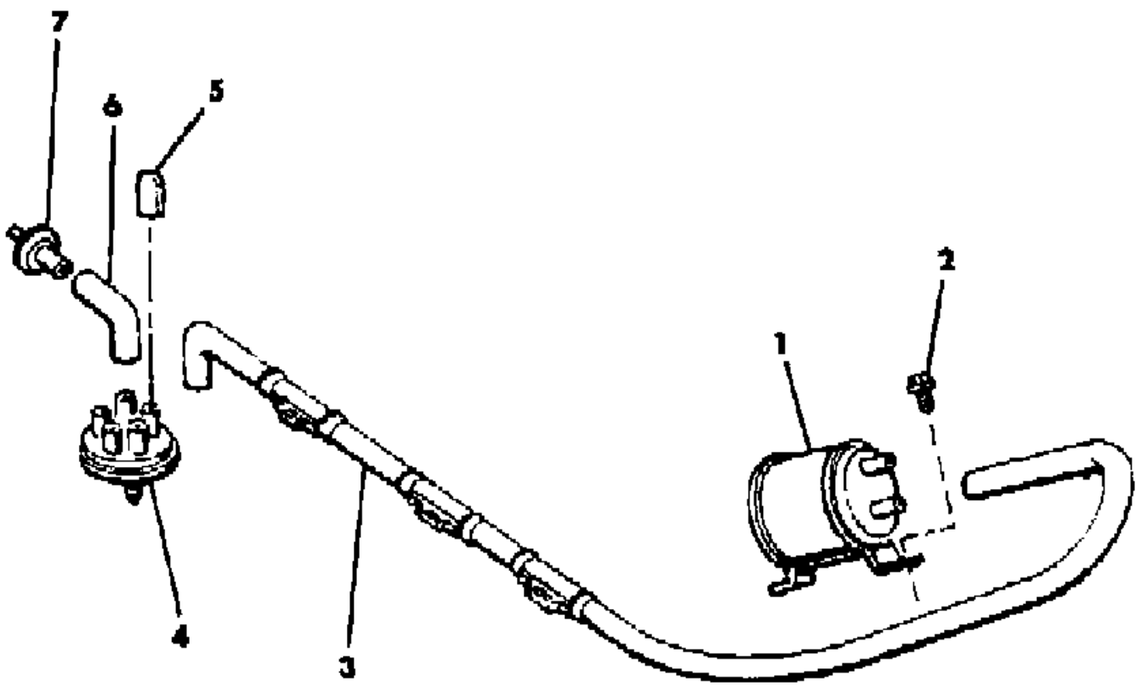

ITEM	PART NUMBER	QTY	BODY	MODEL	DESCRIPTION
1	J323 2991	1			TANK, Vacuum
2	1150 2843	2			SCREW
3					HOSE ASSEMBLY ***
	5600 1264	1			1984-85
					1986
	5300 3520	1			With Cruise Control
	5600 1904	1			Without Cruise Control
4	5600 1250	1			MANIFOLD, Vacuum ***
5	3420 2137	1			CAP
6					HOSE
	3300 0657	1			Diesel
7					VALVE, Check
	J322 5641	1			Diesel

MODEL CODES

16=Cherokee 2 Dr.(1981-83)
17=Cherokee 2 Dr.(1981-83)
73=Cherokee 2WD-2 Dr.(1984-86)
74=Cherokee 2WD-4 Dr.(1984-86)
18=Cherokee 4 Dr.(1981-83)
77=Cherokee 4WD-2 Dr.(1984-86)
78=Cherokee 4WD-4 Dr.(1984-86)
85=CJ-5 (1981-83)
86=CJ-6(1981)
87=CJ-7(1981-86)
88=CJ-8, Scrambler(1981-86)
64=Comanche 2WD-6 Ft. Box(1986)
66=Comanche 2WD-7 Ft. Box(1986)
63=Comanche 4WD-6 Ft. Box(1986)
65=Comanche 4WD-7 Ft. Box(1986)
15=Grand Wagoneer 4 Dr.(1984-86)
25=J-10 Truck 7 Ft. Box(1981-84)
26=J10 Truck 8 Ft. Box(1981-86)
27=J-20 Truck 8 Ft. Box(1981-86)
15=Wagoneer 4 Dr.(1981-83)
75=Wagoneer 4WD-4 Dr.(1984-86)

BODY
CJ=CJ-5, CJ-6, CJ-7, CJ-8, Scrambler(1981-86)
MJ=Comanche Pickup(1986)

STYLES
SJ=Wagoneer(1981-83), Grand Wagoneer(1984-86), Cherokee(1981-83), J-10, J-20(1981-86)
XJ=Wagoneer(1984-86), Cherokee(1984-86)

AR = Use as Required - = Non Illustrated Part P.A.R. = Paint as Required

« RETURN TO GROUP INDEX

RECEIVER/DRIER AND HOSES WITH FACTORY AIR CONDITIONING SJ CHEROKEE, SJ WAGONEER, J10, J20
Figure 24-2500

81J24 2500

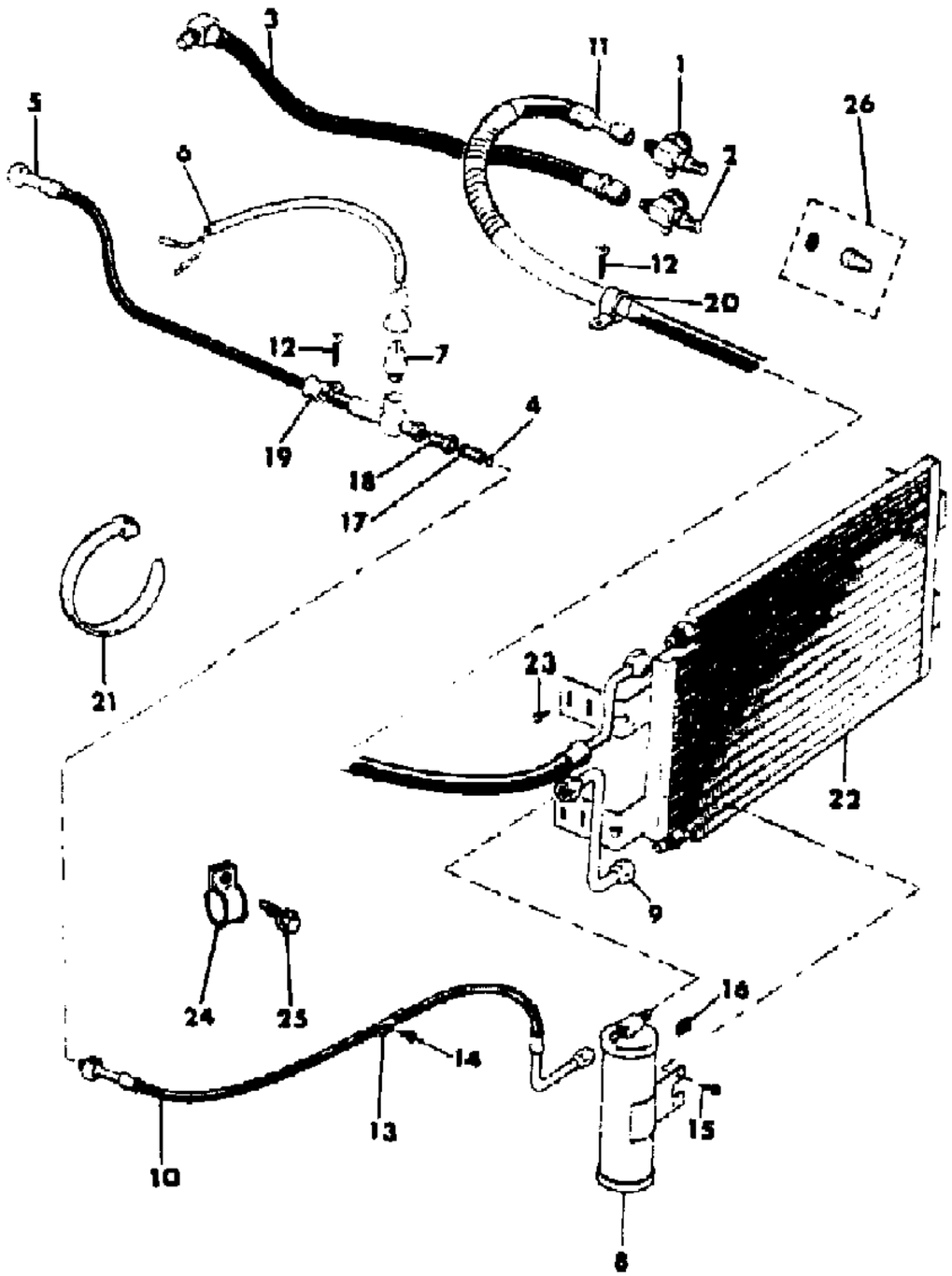

ITEM	PART NUMBER	QTY	BODY	MODEL	DESCRIPTION
1	J545 9856	1			VALVE, Discharge
2					VALVE, Suction
	J545 9857	1			1981-82: Without Cut-Off Switch
3					HOSE, Evaporator To Compressor
	J546 3854	1			
					1983-86: EXPORT, Right Hand Drive
	J805 3131	1			Six Cylinder
	J805 1890	1			Eight Cylinder
4	J317 1788	AR			O-RING
5					HOSE, Quick Coupling To Evaporator
	J546 3995	1			1981-82: Without Cut-Off Switch
	J576 3649	1			1982-86: With Cut-Off Switch
	J805 1889	1			1983-86: EXPORT, Right Hand Drive
6	J576 3526	1			WIRE, Low Freon
7	J374 1260	1			SWITCH, Cut-Off
8					RECEIVER/DRIER ***
	J813 0314	1			Six Cylinder
	J813 0315	1			Eight Cylinder
9	J813 0316	1			TUBE, Receiver
10	J813 0317	1			HOSE, Receiver To Quick Coupling
11	J813 0318	1			HOSE, Compressor To Condenser
12	S016 1895	AR			SCREW
13	J012 0525	1			CLIP
14	J448 9486	1			SCREW
15	J812 0054	2			SCREW
16	J044 5446	2			NUT
17	J317 1794	1			COUPLING, Male ***
18	J317 1795	1			COUPLING, Female ***
19	S012 0530	2			CLIP
20	J400 3838	1			CLIP
21	J322 3227	AR			STRAP
22					CORE, Condenser
	J813 0313	1			Six Cylinder
	J813 0312	1			Eight Cylinder
23	S014 5415	4			SCREW
24	J546 0142	1			BRACKET
25	J400 5559	1			SCREW
26	J448 8331	2			CAP PACKAGE ***

MODEL CODES
16=Cherokee 2 Dr.(1981-83)
17=Cherokee 2 Dr.(1981-83)
73=Cherokee 2WD-2 Dr.(1984-86)
74=Cherokee 2WD-4 Dr.(1984-86)
18=Cherokee 4 Dr.(1981-83)
77=Cherokee 4WD-2 Dr.(1984-86)
78=Cherokee 4WD-4 Dr.(1984-86)
85=CJ-5 (1981-83)
86=CJ-6(1981)
87=CJ-7(1981-86)
88=CJ-8, Scrambler(1981-86)
64=Comanche 2WD-6 Ft. Box(1986)
66=Comanche 2WD-7 Ft. Box(1986)
63=Comanche 4WD-6 Ft. Box(1986)
65=Comanche 4WD-7 Ft. Box(1986)
15=Grand Wagoneer 4 Dr.(1984-86)
25=J-10 Truck 7 Ft. Box(1981-84)
26=J10 Truck 8 Ft. Box(1981-86)
27=J-20 Truck 8 Ft. Box(1981-86)
15=Wagoneer 4 Dr.(1981-83)
75=Wagoneer 4WD-4 Dr.(1984-86)

BODY
CJ=CJ-5, CJ-6, CJ-7, CJ-8, Scrambler(1981-86)
MJ=Comanche Pickup(1986)

STYLES
SJ=Wagoneer(1981-83), Grand Wagoneer(1984-86), Cherokee(1981-83), J-10, J-20(1981-86)
XJ=Wagoneer(1984-86), Cherokee(1984-86)

AR = Use as Required - = Non Illustrated Part P.A.R. = Paint as Required

« RETURN TO GROUP INDEX

RECEIVER/DRIER AND HOSES WITH AMERICAN AIR CONDITIONING SJ CHEROKEE, SJ WAGONEER, J10, J20
Figure 24-2600

81J24 2600

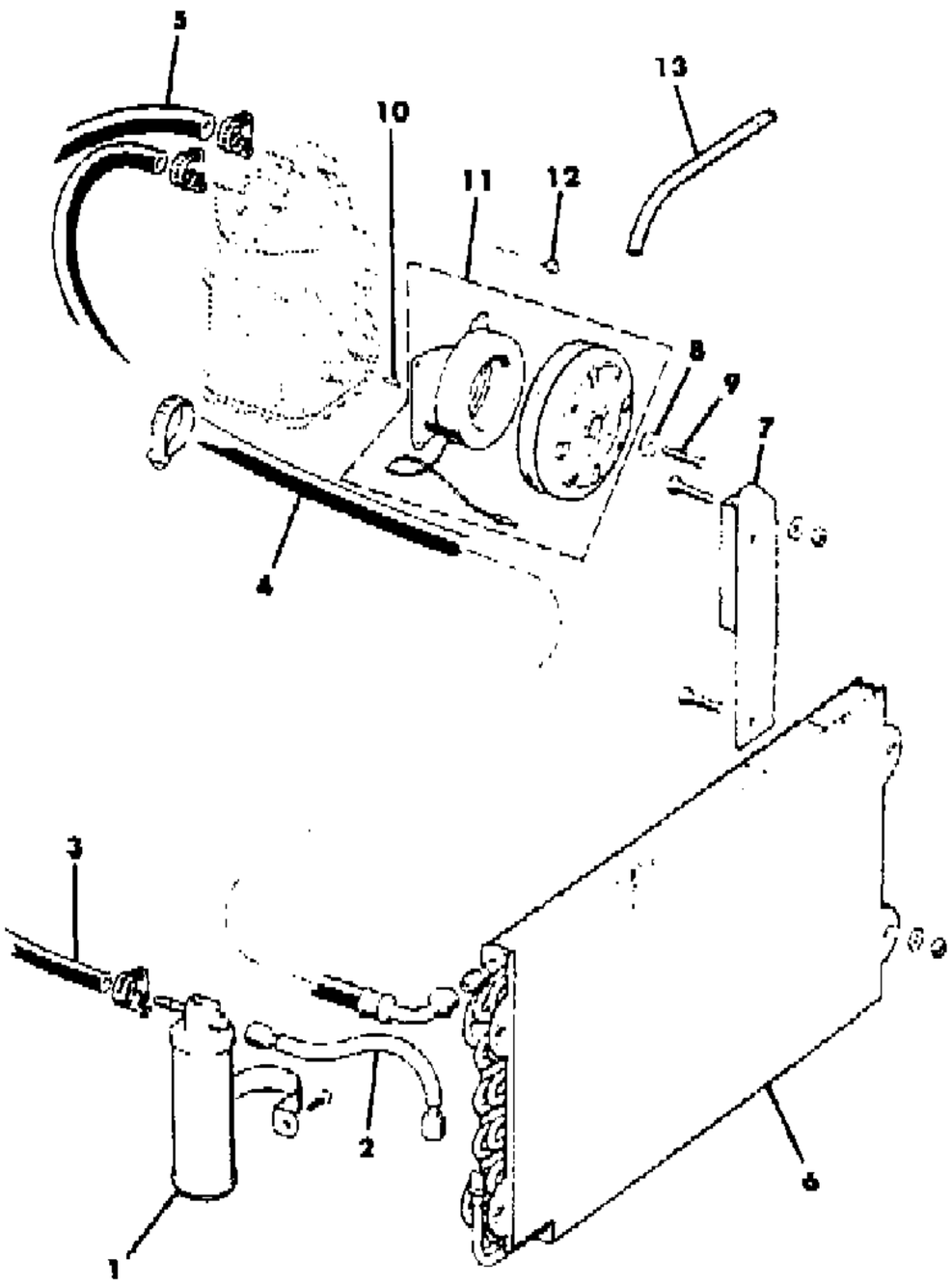

ITEM	PART NUMBER	QTY	BODY	MODEL	DESCRIPTION
1	J812 1825	1			RECEIVER/DRIER ***
2	J812 5778	1			TUBE, Condenser To Receiver
3	J812 5777	1			HOSE, Receiver To Evaporator
4	J812 5401	1			HOSE, Compressor To Condensor
5	J812 5776	1			HOSE, Evaporator To Compressor
6	J812 6093	1			CORE, Condenser
7					MOUNTING PACKAGE, Condenser
					1981-82
	J812 6098	1			Six Cylinder
	J812 6094	1			Eight Cylinder
	8351 0198	1			1983-86
8	J400 0208	1			WASHER
9	J400 0207	1			BOLT
10	J369 3097	1			KEY, Shaft
11					CLUTCH, Compressor
	J813 3448	1			US-California
	J812 6139	1			Without US-California
12	J400 0741	4			SCREW
13					BELT, Compressor
					Six Cylinder
	J322 7692	1			1981-83
	8350 4325	1			1984-86
	J813 1730	1			Eight Cylinder

MODEL CODES

16=Cherokee 2 Dr.(1981-83)	78=Cherokee 4WD-4 Dr.(1984-86)	64=Comanche 2WD-6 Ft. Box(1986)	25=J-10 Truck 7 Ft. Box(1981-84)
17=Cherokee 2 Dr.(1981-83)	85=CJ-5 (1981-83)	66=Comanche 2WD-7 Ft. Box(1986)	26=J10 Truck 8 Ft. Box(1981-86)
73=Cherokee 2WD-2 Dr.(1984-86)	86=CJ-6(1981)	63=Comanche 4WD-6 Ft. Box(1986)	27=J-20 Truck 8 Ft. Box(1981-86)
74=Cherokee 2WD-4 Dr.(1984-86)	87=CJ-7(1981-86)	65=Comanche 4WD-7 Ft. Box(1986)	15=Wagoneer 4 Dr.(1981-83)
18=Cherokee 4 Dr.(1981-83)	88=CJ-8, Scrambler(1981-86)	15=Grand Wagoneer 4 Dr.(1984-86)	75=Wagoneer 4WD-4 Dr.(1984-86)
77=Cherokee 4WD-2 Dr.(1984-86)			

BODY
CJ=CJ-5, CJ-6, CJ-7, CJ-8, Scrambler(1981-86)
MJ=Comanche Pickup(1986)

STYLES
SJ=Wagoneer(1981-83), Grand Wagoneer(1984-86), Cherokee(1981-83), J-10, J-20(1981-86)
XJ=Wagoneer(1984-86), Cherokee(1984-86)

AR = Use as Required - = Non Illustrated Part P.A.R. = Paint as Required

« RETURN TO GROUP INDEX

COMPRESSOR, AIR CONDITIONING SANDEN
Figure 24-2700

81J24 2700

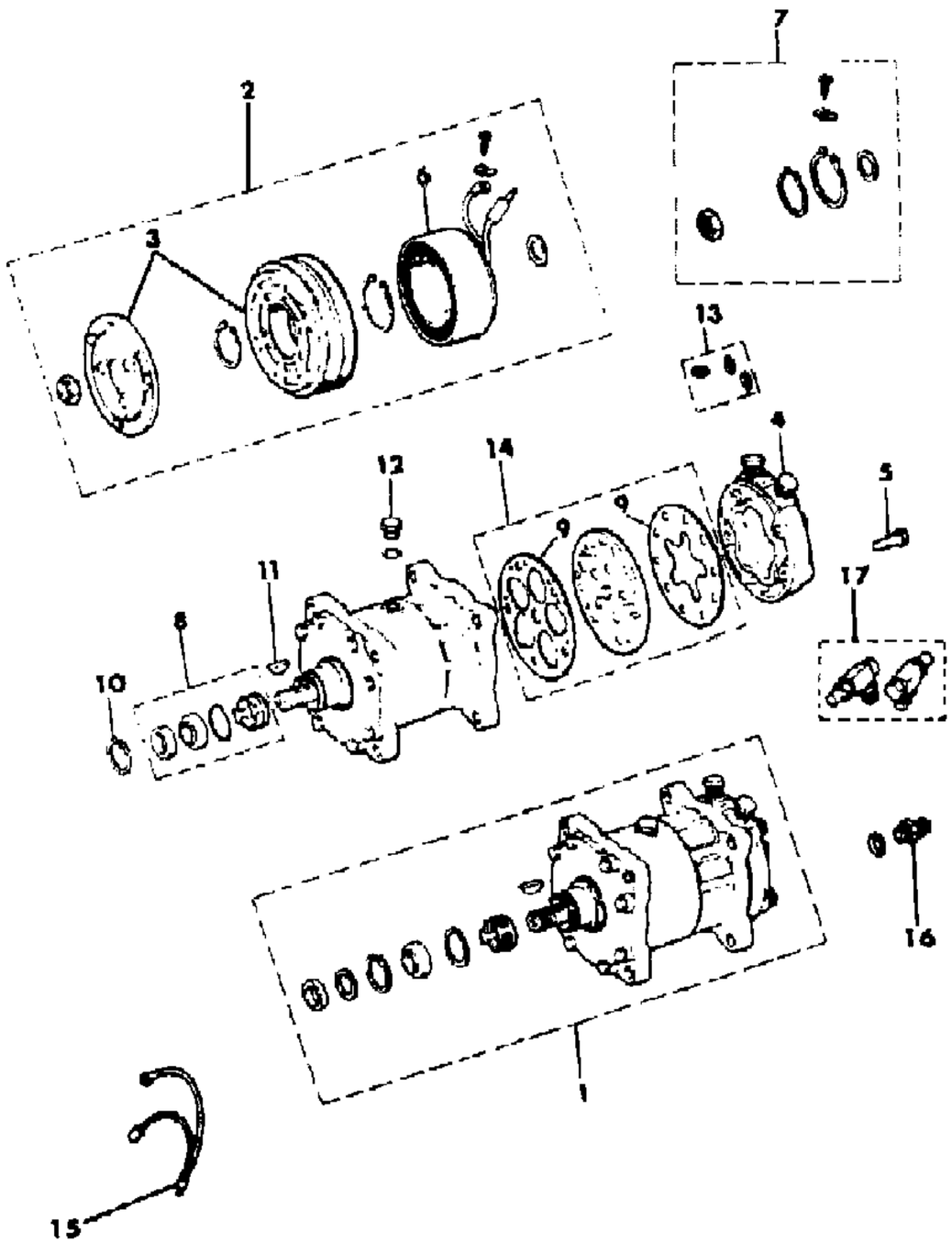

ITEM	PART NUMBER	QTY	BODY	MODEL	DESCRIPTION
1					COMPRESSOR, Air Conditioning
					With Factory Air Conditioning
	J813 3449	1	CJ,SJ		
	J813 3449	1	XJ,MJ		Four Cylinder
	J813 3449	1	XJ,MJ		Six Cylinder
	8350 1450	1	XJ,MJ		Diesel
					With American Air Conditioning
	J813 3196	1	CJ,SJ		
	8350 2757	1	XJ,MJ		Four Cylinder
	J813 3449	1	XJ,MJ		Six Cylinder
2					CLUTCH PACKAGE, Compressor ***
					With Factory Air Conditioning
	8351 0034	1	XJ,MJ		Four Cylinder
	8351 0035	1	XJ,MJ		Six Cylinder
	8351 0033	1	XJ,MJ		Diesel
					With American Air Conditioning
	8350 2758	1	XJ,MJ		Four Cylinder
	8351 0035	1	XJ,MJ		Six Cylinder
					With Double Groove Pulley
	J813 4178	1	CJ,SJ		1982-83
	8351 0033	1	CJ,SJ		1984-86
					With Serpentine Pulley
	J813 3448	1	CJ,SJ		1981-83
	8351 0034	1	CJ,SJ		1984-86
3					CLUTCH, Compressor
					With Factory Air Conditioning
	J813 3446	1	XJ,MJ		Four Cylinder
	8351 0039	1	XJ,MJ		Six Cylinder
	J813 4177	1	XJ,MJ		Diesel
					With American Air Conditioning
	8350 2759	1	XJ,MJ		Four Cylinder
	8351 0039	1	XJ,MJ		Six Cylinder
					With Double Groove Pulley
	J813 4177	1	CJ,SJ		1982-86
					With Serpentine Pulley
	J813 3446	1	CJ,SJ		1981-86
4					HEAD, Compressor Cylinder
					With Factory Air Conditioning
	J813 3445	1	CJ,SJ		

MODEL CODES

16=Cherokee 2 Dr.(1981-83)	78=Cherokee 4WD-4 Dr.(1984-86)	64=Comanche 2WD-6 Ft. Box(1986)	25=J-10 Truck 7 Ft. Box(1981-84)
17=Cherokee 2 Dr.(1981-83)	85=CJ-5 (1981-83)	66=Comanche 2WD-7 Ft. Box(1986)	26=J10 Truck 8 Ft. Box(1981-86)
73=Cherokee 2WD-2 Dr.(1984-86)	86=CJ-6(1981)	63=Comanche 4WD-6 Ft. Box(1986)	27=J-20 Truck 8 Ft. Box(1981-86)
74=Cherokee 2WD-4 Dr.(1984-86)	87=CJ-7(1981-86)	65=Comanche 4WD-7 Ft. Box(1986)	15=Wagoneer 4 Dr.(1981-83)
18=Cherokee 4 Dr.(1981-83)	88=CJ-8, Scrambler(1981-86)	15=Grand Wagoneer 4 Dr.(1984-86)	75=Wagoneer 4WD-4 Dr.(1984-86)
77=Cherokee 4WD-2 Dr.(1984-86)			

BODY
CJ=CJ-5, CJ-6, CJ-7, CJ-8, Scrambler(1981-86)
MJ=Comanche Pickup(1986)

STYLES
SJ=Wagoneer(1981-83), Grand Wagoneer(1984-86), Cherokee(1981-83), J-10, J-20(1981-86)
XJ=Wagoneer(1984-86), Cherokee(1984-86)

AR = Use as Required - = Non Illustrated Part P.A.R. = Paint as Required

« RETURN TO GROUP INDEX »

COMPRESSOR, AIR CONDITIONING SANDEN
Figure 24-2700

81J24 2700

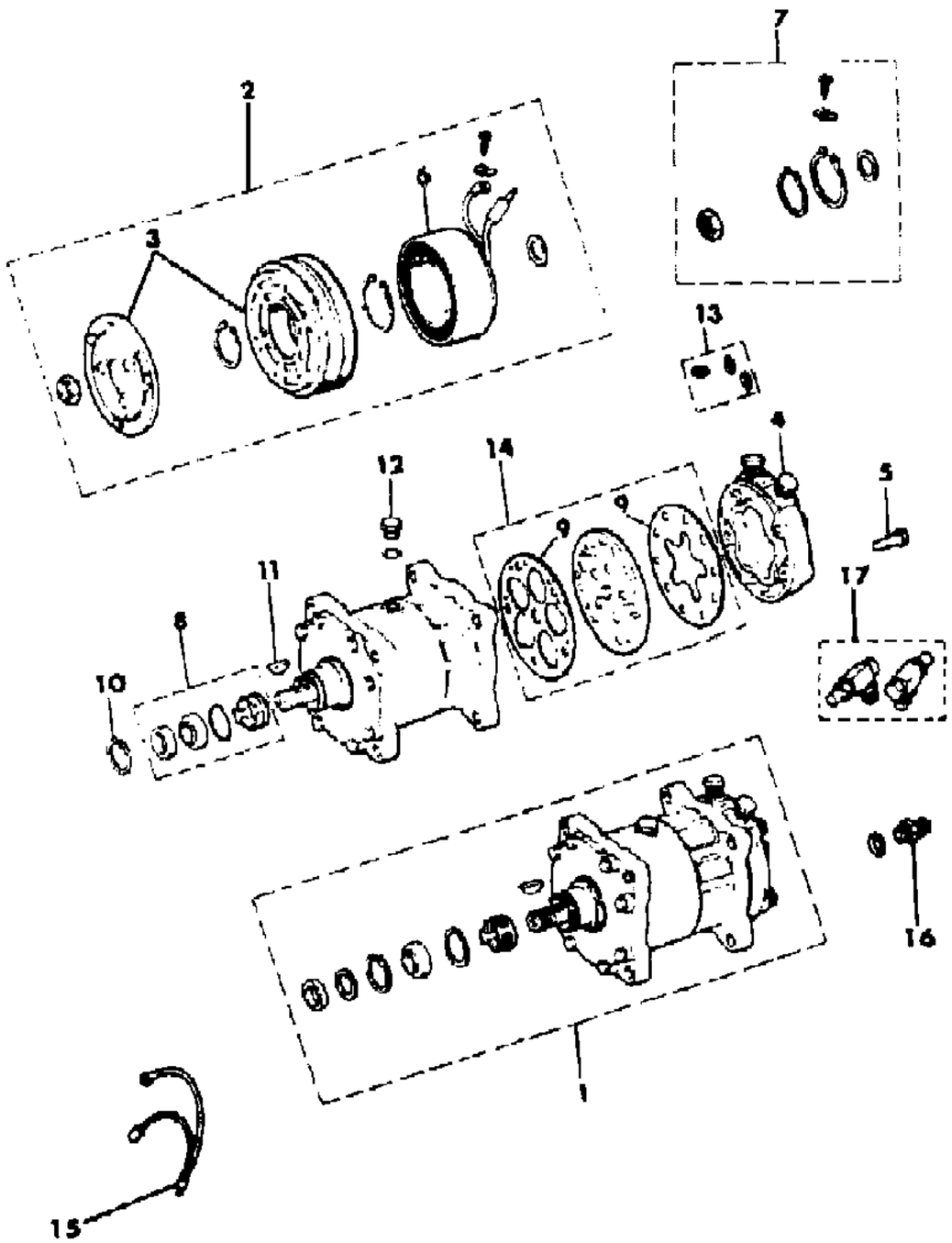

ITEM	PART NUMBER	QTY	BODY	MODEL	DESCRIPTION
	J813 3445	1	XJ,MJ		Four Cylinder
	J813 3445	1	XJ,MJ		Six Cylinder
	J813 4179	1	XJ,MJ		Diesel
					With American Air Conditioning
	J813 3188	1	CJ,SJ		
	8350 2761	1	XJ,MJ		Four Cylinder
	J813 3445	1	XJ,MJ		Six Cylinder
5	J813 3189	5			BOLT
6					COIL, Compressor Clutch
	J813 3447	1	CJ,SJ		1981-83
	8351 0032	1	CJ,SJ		1984-86
	8351 0032	1	XJ,MJ		With Factory Air Conditioning
	8350 2760	1	XJ,MJ		With American Air Conditioning
7	J813 3192	1			SERVICE PACKAGE, Clutch ***
8	J813 3183	1			SEAL PACKAGE, Clutch
9	J813 3186	1			GASKET PACKAGE
10	J813 3182	1			RING, Snap
11	J813 3191	1			KEY, Shaft
12	J813 3185	1			PLUG
13	J813 3184	1			O-RING PACKAGE ***
14	J813 3187	1			PLATE PACKAGE ***
15	8350 0157	1	CJ,SJ		HARNESS, Jumper
16	J813 3190	2	CJ,SJ		VALVE, Service Port
17	J813 3904	1	CJ,SJ		FITTING PACKAGE ***

MODEL CODES

16=Cherokee 2 Dr.(1981-83)
17=Cherokee 2 Dr.(1981-83)
73=Cherokee 2WD-2 Dr.(1984-86)
74=Cherokee 2WD-4 Dr.(1984-86)
18=Cherokee 4 Dr.(1981-83)
77=Cherokee 4WD-2 Dr.(1984-86)
78=Cherokee 4WD-4 Dr.(1984-86)
85=CJ-5 (1981-83)
86=CJ-6(1981)
87=CJ-7(1981-86)
88=CJ-8, Scrambler(1981-86)
64=Comanche 2WD-6 Ft. Box(1986)
66=Comanche 2WD-7 Ft. Box(1986)
63=Comanche 4WD-6 Ft. Box(1986)
65=Comanche 4WD-7 Ft. Box(1986)
15=Grand Wagoneer 4 Dr.(1984-86)
25=J-10 Truck 7 Ft. Box(1981-84)
26=J10 Truck 8 Ft. Box(1981-86)
27=J-20 Truck 8 Ft. Box(1981-86)
15=Wagoneer 4 Dr.(1981-83)
75=Wagoneer 4WD-4 Dr.(1984-86)

BODY
CJ=CJ-5, CJ-6, CJ-7, CJ-8, Scrambler(1981-86)
MJ=Comanche Pickup(1986)

STYLES
SJ=Wagoneer(1981-83), Grand Wagoneer(1984-86), Cherokee(1981-83), J-10, J-20(1981-86)
XJ=Wagoneer(1984-86), Cherokee(1984-86)

AR = Use as Required - = Non Illustrated Part P.A.R. = Paint as Required

« RETURN TO GROUP INDEX

COMPRESSOR, AIR CONDITIONING YORK
Figure 24-2800

81J24 2800

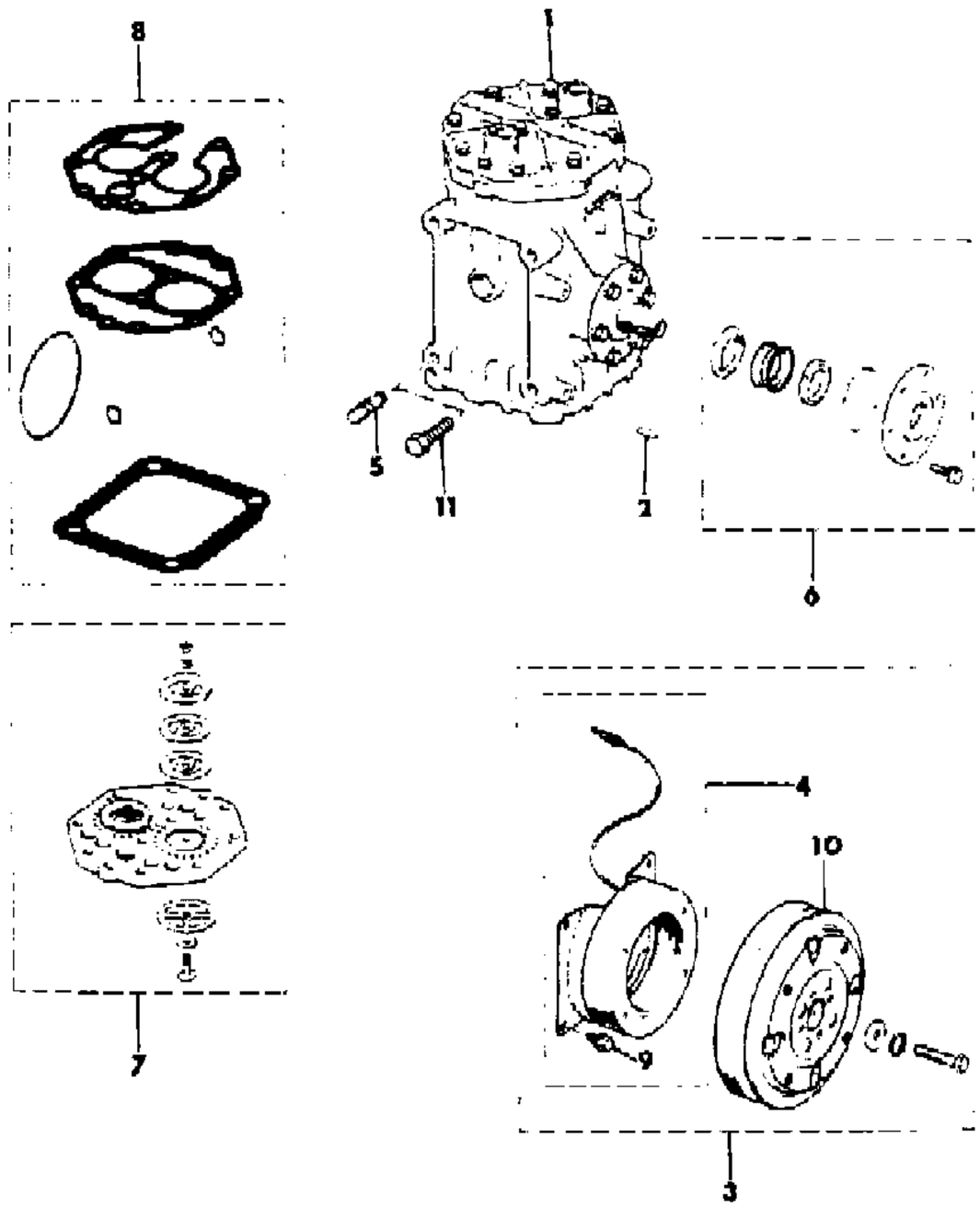

ITEM	PART NUMBER	QTY	BODY	MODEL	DESCRIPTION
1					COMPRESSOR, Air Conditioning
	J322 8826	1			With Factory Air Conditioning
	J812 1817	1			With American Air Conditioning
2	J369 3097	1			KEY, Shaft
3					CLUTCH PACKAGE, Compressor ***
	J812 6139	1			1981: With American Air Conditioning
					1981-86: With Factory Air Conditioning
					Six Cylinder
	J369 2974	1			1981: Made by ELECTRO-LOCK with Unpainted Finish
	J321 7331	1			1981: Made by WARNER-ELECTRIC with Painted Black Finish
					Eight Cylinder
	J576 1332	1			Made by OGURA
	J322 7685	1			Made by WARNER-ELECTRIC with Painted Black Finish
	J369 2973	1			Made by ELECTRO-LOCK with Unpainted Finish
4					COIL, Compressor Clutch
					Six Cylinder
	J812 1283	1			Made by WARNER-ELECTRIC with Painted Black Finish
	J813 4174	1			Made by OGURA
					Eight Cylinder
	J812 8244	1			Made by ELECTRO-LOCK with Unpainted Finish
	J813 4174	1			Made by OGURA
	J812 1283	1			Made by WARNER-ELECTRIC with Painted Black Finish
5	J400 3917	3			STUD
6					SEAL PACKAGE
	J812 0180	1			With Factory Air Conditioning
	J812 1820	1			With American Air Conditioning
7					PLATE PACKAGE ***
	J812 7440	1			With Factory Air Conditioning
	J812 1821	1			With American Air Conditioning
8					GASKET PACKAGE
	J812 2073	1			With Factory Air Conditioning
	J812 1819	1			With American Air Conditioning
9	J400 0741	4			SCREW
10					CLUTCH, Compressor
					Six Cylinder
	J812 8243	1			Made by ELECTRO-LOCK with Unpainted Finish
	J812 2111	1			Made by WARNER-ELECTRIC with Painted Black Finish
					Eight Cylinder
	J812 9533	1			Made by ELECTRO-LOCK with Unpainted Finish

MODEL CODES

16=Cherokee 2 Dr.(1981-83)
17=Cherokee 2 Dr.(1981-83)
73=Cherokee 2WD-2 Dr.(1984-86)
74=Cherokee 2WD-4 Dr.(1984-86)
18=Cherokee 4 Dr.(1981-83)
77=Cherokee 4WD-2 Dr.(1984-86)
78=Cherokee 4WD-4 Dr.(1984-86)
85=CJ-5 (1981-83)
86=CJ-6(1981)
87=CJ-7(1981-86)
88=CJ-8, Scrambler(1981-86)
64=Comanche 2WD-6 Ft. Box(1986)
66=Comanche 2WD-7 Ft. Box(1986)
63=Comanche 4WD-6 Ft. Box(1986)
65=Comanche 4WD-7 Ft. Box(1986)
15=Grand Wagoneer 4 Dr.(1984-86)
25=J-10 Truck 7 Ft. Box(1981-84)
26=J10 Truck 8 Ft. Box(1981-86)
27=J-20 Truck 8 Ft. Box(1981-86)
15=Wagoneer 4 Dr.(1981-83)
75=Wagoneer 4WD-4 Dr.(1984-86)

BODY
CJ=CJ-5, CJ-6, CJ-7, CJ-8, Scrambler(1981-86)
MJ=Comanche Pickup(1986)

STYLES
SJ=Wagoneer(1981-83), Grand Wagoneer(1984-86), Cherokee(1981-83), J-10, J-20(1981-86)
XJ=Wagoneer(1984-86), Cherokee(1984-86)

AR = Use as Required - = Non Illustrated Part P.A.R. = Paint as Required

81J24 2800

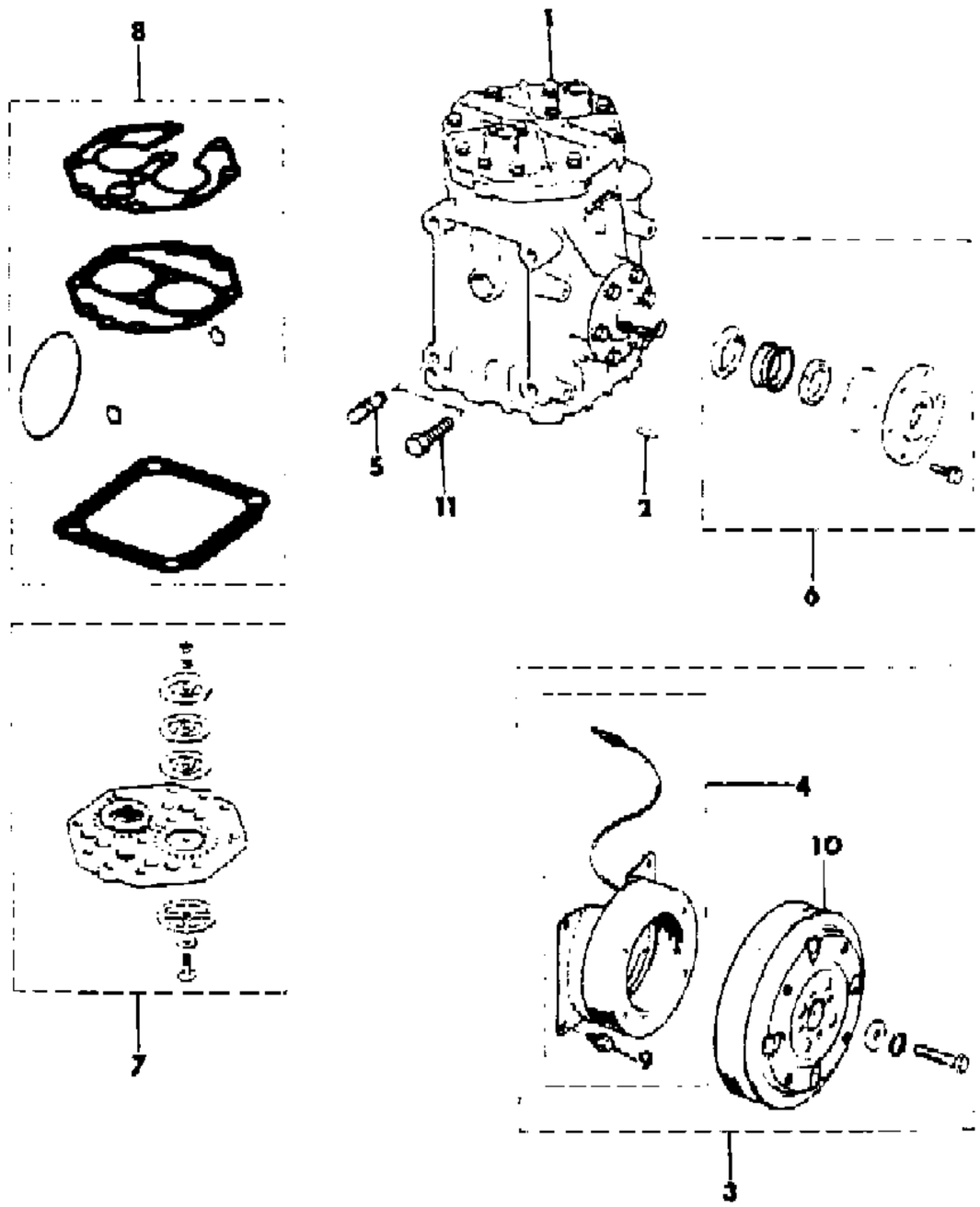

ITEM	PART NUMBER	QTY	BODY	MODEL	DESCRIPTION
	J812 6532	1			Made by WARNER-ELECTRIC with Painted Black Finish
	J813 4175	1			Made by OGURA
11	J018 0122	AR			BOLT

MODEL CODES

16=Cherokee 2 Dr.(1981-83)
17=Cherokee 2 Dr.(1981-83)
73=Cherokee 2WD-2 Dr.(1984-86)
74=Cherokee 2WD-4 Dr.(1984-86)
18=Cherokee 4 Dr.(1981-83)
77=Cherokee 4WD-2 Dr.(1984-86)
78=Cherokee 4WD-4 Dr.(1984-86)
85=CJ-5 (1981-83)
86=CJ-6(1981)
87=CJ-7(1981-86)
88=CJ-8, Scrambler(1981-86)
64=Comanche 2WD-6 Ft. Box(1986)
66=Comanche 2WD-7 Ft. Box(1986)
63=Comanche 4WD-6 Ft. Box(1986)
65=Comanche 4WD-7 Ft. Box(1986)
15=Grand Wagoneer 4 Dr.(1984-86)
25=J-10 Truck 7 Ft. Box(1981-84)
26=J10 Truck 8 Ft. Box(1981-86)
27=J-20 Truck 8 Ft. Box(1981-86)
15=Wagoneer 4 Dr.(1981-83)
75=Wagoneer 4WD-4 Dr.(1984-86)

BODY
CJ=CJ-5, CJ-6, CJ-7, CJ-8, Scrambler(1981-86)
MJ=Comanche Pickup(1986)

STYLES
SJ=Wagoneer(1981-83), Grand Wagoneer(1984-86), Cherokee(1981-83), J-10, J-20(1981-86)
XJ=Wagoneer(1984-86), Cherokee(1984-86)

AR = Use as Required - = Non Illustrated Part P.A.R. = Paint as Required

COMPRESSOR MOUNTING FOUR CYLINDER WITH AMERICAN AIR CJ-5,6,7,8, SCRAMBLER
Figure 24-2900

81J24 2900

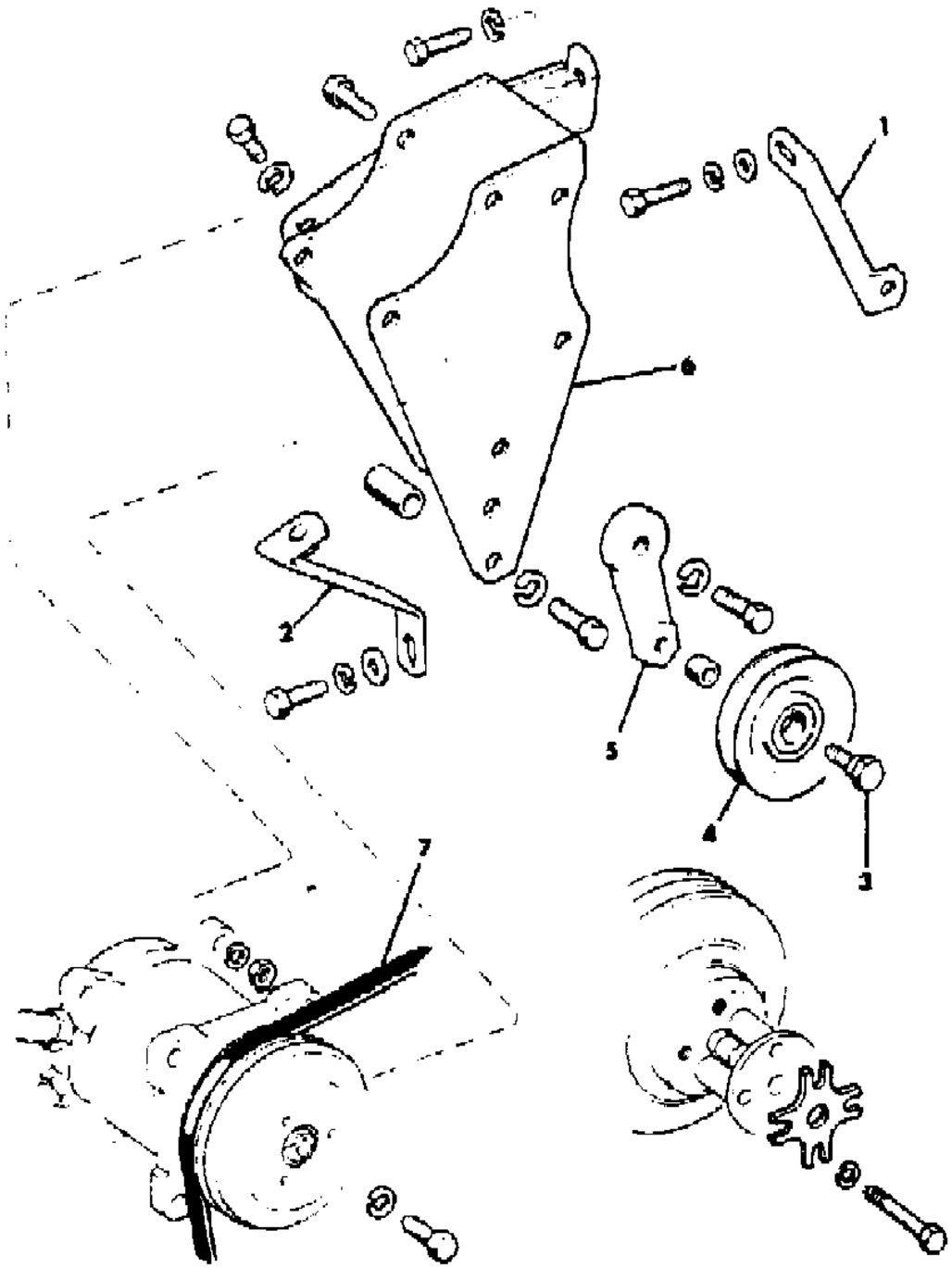

ITEM	PART NUMBER	QTY	BODY	MODEL	DESCRIPTION
1	J813 2872	1			BRACKET, Compressor Mounting
2	J813 3874	1			BRACKET, Compressor Mounting
3	J400 6082	1			BOLT
4	J812 1949	1			PULLEY, Idler
5	J813 3872	1			ECCENTRIC, Idler Pulley
6	J813 2871	1			BRACKET
7					BELT, Compressor
	J813 2879	1			1981-83
	8350 4325	1			1984-86

MODEL CODES

16=Cherokee 2 Dr.(1981-83)
17=Cherokee 2 Dr.(1981-83)
73=Cherokee 2WD-2 Dr.(1984-86)
74=Cherokee 2WD-4 Dr.(1984-86)
18=Cherokee 4 Dr.(1981-83)
77=Cherokee 4WD-2 Dr.(1984-86)
78=Cherokee 4WD-4 Dr.(1984-86)
85=CJ-5 (1981-83)
86=CJ-6(1981)
87=CJ-7(1981-86)
88=CJ-8, Scrambler(1981-86)
64=Comanche 2WD-6 Ft. Box(1986)
66=Comanche 2WD-7 Ft. Box(1986)
63=Comanche 4WD-6 Ft. Box(1986)
65=Comanche 4WD-7 Ft. Box(1986)
15=Grand Wagoneer 4 Dr.(1984-86)
25=J-10 Truck 7 Ft. Box(1981-84)
26=J10 Truck 8 Ft. Box(1981-86)
27=J-20 Truck 8 Ft. Box(1981-86)
15=Wagoneer 4 Dr.(1981-83)
75=Wagoneer 4WD-4 Dr.(1984-86)

BODY
CJ=CJ-5, CJ-6, CJ-7, CJ-8, Scrambler(1981-86)
MJ=Comanche Pickup(1986)

STYLES
SJ=Wagoneer(1981-83), Grand Wagoneer(1984-86), Cherokee(1981-83), J-10, J-20(1981-86)
XJ=Wagoneer(1984-86), Cherokee(1984-86)

AR = Use as Required - = Non Illustrated Part P.A.R. = Paint as Required

« RETURN TO GROUP INDEX

COMPRESSOR MOUNTING SIX CYLINDER WITH SANDEN FACTORY AIR CJ-5,6,7,8, SCRAMBLER
Figure 24-3000

81J24 3000

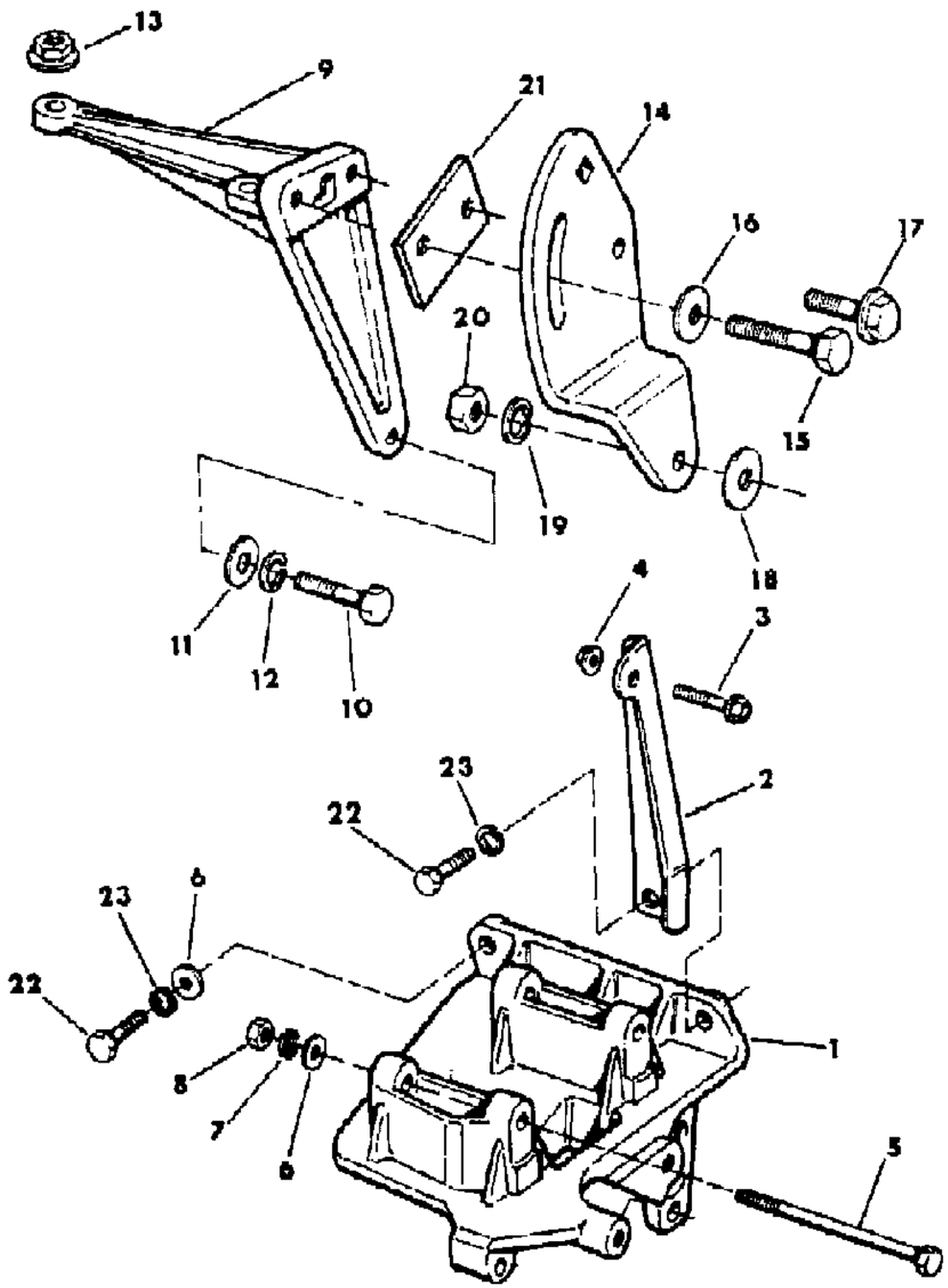

ITEM	PART NUMBER	QTY	BODY	MODEL	DESCRIPTION
1	J323 9470	1			BRACKET, Compressor Mounting
2	J323 9633	1			BRACE, Compressor
3	J400 4010	1			SCREW
4	S941 1507	1			NUT
5	J941 7624	2			SCREW
6	J400 1102	AR			WASHER
7	J012 0930	2			WASHER
8	S941 8738	2			NUT
9	J324 2191	1			BRACKET, Idler Pulley Mounting
10	J018 0126	1			SCREW
11	J400 1104	1			WASHER
12	J012 0382	1			WASHER
13	J400 4005	1			NUT
14	J322 4472	1			BRACKET, Idler
15	J400 4100	1			SCREW
16	J400 5390	1			WASHER
17	J027 3776	1			SCREW
18	J400 1289	1			SPACER
19	J400 1898	1			WASHER, Lock
20	S012 0370	1			NUT
21	J322 4473	1			SPACER
22	J018 0123	AR			SCREW
23	J400 3803	AR			WASHER

MODEL CODES

16=Cherokee 2 Dr.(1981-83)
17=Cherokee 2 Dr.(1981-83)
73=Cherokee 2WD-2 Dr.(1984-86)
74=Cherokee 2WD-4 Dr.(1984-86)
18=Cherokee 4 Dr.(1981-83)
77=Cherokee 4WD-2 Dr.(1984-86)
78=Cherokee 4WD-4 Dr.(1984-86)
85=CJ-5 (1981-83)
86=CJ-6(1981)
87=CJ-7(1981-86)
88=CJ-8, Scrambler(1981-86)
64=Comanche 2WD-6 Ft. Box(1986)
66=Comanche 2WD-7 Ft. Box(1986)
63=Comanche 4WD-6 Ft. Box(1986)
65=Comanche 4WD-7 Ft. Box(1986)
15=Grand Wagoneer 4 Dr.(1984-86)
25=J-10 Truck 7 Ft. Box(1981-84)
26=J10 Truck 8 Ft. Box(1981-86)
27=J-20 Truck 8 Ft. Box(1981-86)
15=Wagoneer 4 Dr.(1981-83)
75=Wagoneer 4WD-4 Dr.(1984-86)

BODY
CJ=CJ-5, CJ-6, CJ-7, CJ-8, Scrambler(1981-86)
MJ=Comanche Pickup(1986)

STYLES
SJ=Wagoneer(1981-83), Grand Wagoneer(1984-86), Cherokee(1981-83), J-10, J-20(1981-86)
XJ=Wagoneer(1984-86), Cherokee(1984-86)

AR = Use as Required - = Non Illustrated Part P.A.R. = Paint as Required

« RETURN TO GROUP INDEX

COMPRESSOR MOUNTING SIX CYLINDER WITH YORK FACTORY AIR CJ-5,6,7,8, SCRAMBLER
Figure 24-3100

81J24 3100

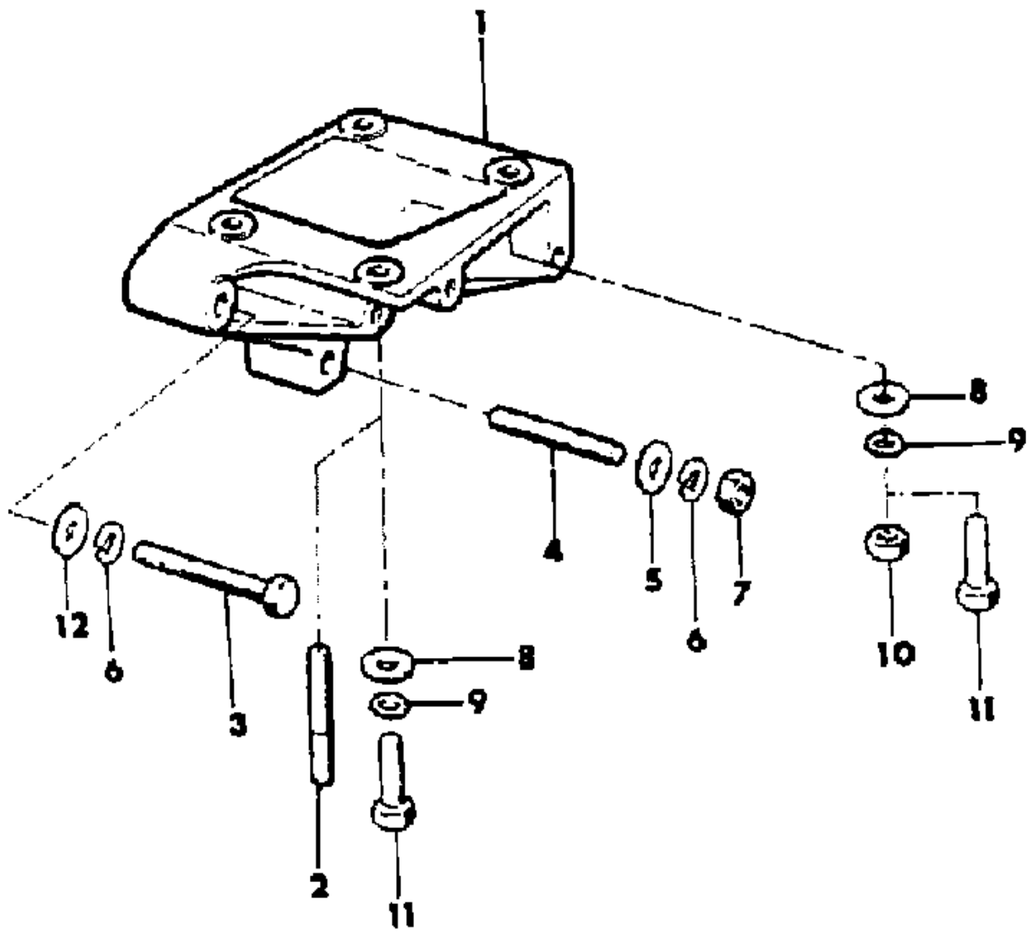

ITEM	PART NUMBER	QTY	BODY	MODEL	DESCRIPTION
1	J323 7579	1			BRACKET, Compressor Mounting
2	J400 3917	4			STUD
3	J018 0161	1			SCREW
4	J400 5587	1			STUD
5	J400 1116	1			WASHER
6	J400 4809	2			WASHER
7	J027 1506	1			NUT
8	J400 1102	4			WASHER
9	J012 0930	4			WASHER
10	J012 0369	3			NUT
11	J018 0122	AR			SCREW
12	J400 1289	1			SPACER

MODEL CODES

16=Cherokee 2 Dr.(1981-83)
17=Cherokee 2 Dr.(1981-83)
73=Cherokee 2WD-2 Dr.(1984-86)
74=Cherokee 2WD-4 Dr.(1984-86)
18=Cherokee 4 Dr.(1981-83)
77=Cherokee 4WD-2 Dr.(1984-86)
78=Cherokee 4WD-4 Dr.(1984-86)
85=CJ-5 (1981-83)
86=CJ-6(1981)
87=CJ-7(1981-86)
88=CJ-8, Scrambler(1981-86)
64=Comanche 2WD-6 Ft. Box(1986)
66=Comanche 2WD-7 Ft. Box(1986)
63=Comanche 4WD-6 Ft. Box(1986)
65=Comanche 4WD-7 Ft. Box(1986)
15=Grand Wagoneer 4 Dr.(1984-86)
25=J-10 Truck 7 Ft. Box(1981-84)
26=J10 Truck 8 Ft. Box(1981-86)
27=J-20 Truck 8 Ft. Box(1981-86)
15=Wagoneer 4 Dr.(1981-83)
75=Wagoneer 4WD-4 Dr.(1984-86)

BODY
CJ=CJ-5, CJ-6, CJ-7, CJ-8, Scrambler(1981-86)
MJ=Comanche Pickup(1986)

STYLES
SJ=Wagoneer(1981-83), Grand Wagoneer(1984-86), Cherokee(1981-83), J-10, J-20(1981-86)
XJ=Wagoneer(1984-86), Cherokee(1984-86)

AR = Use as Required - = Non Illustrated Part P.A.R. = Paint as Required

« RETURN TO GROUP INDEX

COMPRESSOR MOUNTING SIX CYLINDER WITH AMERICAN AIR CJ-5,6,7,8, SCRAMBLER
Figure 24-3200

81J24 3200

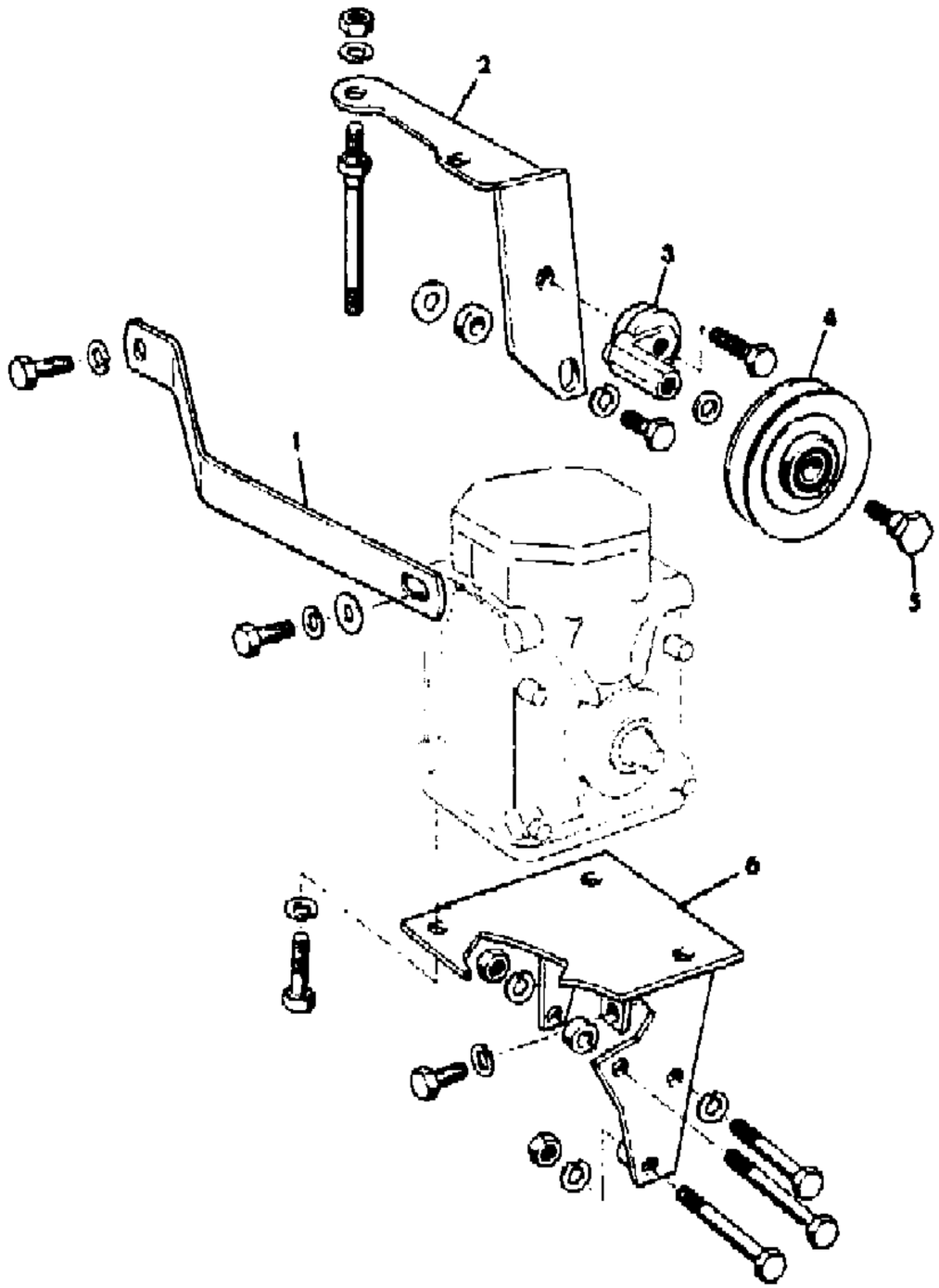

ITEM	PART NUMBER	QTY	BODY	MODEL	DESCRIPTION
1					BRACKET, Compressor Mounting
	J813 0038	1			Without Serpentine Belt Drive
2					BRACKET, Compressor Mounting
	J812 6186	1			Without Serpentine Belt Drive
3					ECCENTRIC
	J812 6189	1			Without Serpentine Belt Drive
4					PULLEY, Idler
	J812 1949	1			Without Serpentine Belt Drive
5					BOLT
	J812 1950	1			Without Serpentine Belt Drive
6					BRACKET, Compressor Mounting
	J812 6183	1			Without Serpentine Belt Drive
	J323 9470	1			With Serpentine Belt Drive

MODEL CODES

16=Cherokee 2 Dr.(1981-83)
17=Cherokee 2 Dr.(1981-83)
73=Cherokee 2WD-2 Dr.(1984-86)
74=Cherokee 2WD-4 Dr.(1984-86)
18=Cherokee 4 Dr.(1981-83)
77=Cherokee 4WD-2 Dr.(1984-86)
78=Cherokee 4WD-4 Dr.(1984-86)
85=CJ-5 (1981-83)
86=CJ-6(1981)
87=CJ-7(1981-86)
88=CJ-8, Scrambler(1981-86)
64=Comanche 2WD-6 Ft. Box(1986)
66=Comanche 2WD-7 Ft. Box(1986)
63=Comanche 4WD-6 Ft. Box(1986)
65=Comanche 4WD-7 Ft. Box(1986)
15=Grand Wagoneer 4 Dr.(1984-86)
25=J-10 Truck 7 Ft. Box(1981-84)
26=J10 Truck 8 Ft. Box(1981-86)
27=J-20 Truck 8 Ft. Box(1981-86)
15=Wagoneer 4 Dr.(1981-83)
75=Wagoneer 4WD-4 Dr.(1984-86)

BODY
CJ=CJ-5, CJ-6, CJ-7, CJ-8, Scrambler(1981-86)
MJ=Comanche Pickup(1986)

STYLES
SJ=Wagoneer(1981-83), Grand Wagoneer(1984-86), Cherokee(1981-83), J-10, J-20(1981-86)
XJ=Wagoneer(1984-86), Cherokee(1984-86)

AR = Use as Required - = Non Illustrated Part P.A.R. = Paint as Required

« RETURN TO GROUP INDEX

COMPRESSOR MOUNTING EIGHT CYLINDER WITH YORK FACTORY AIR SJ CHEROKEE, SJ WAGONEER, J10, J20
Figure 24-3300

81J24 3300

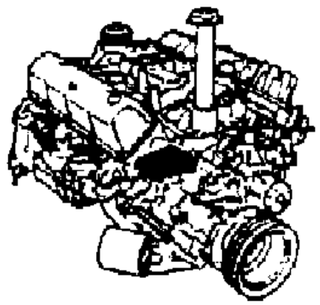

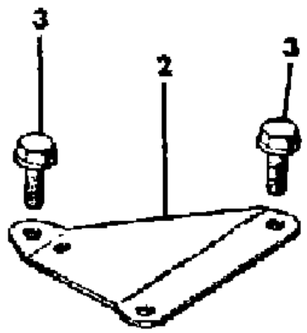

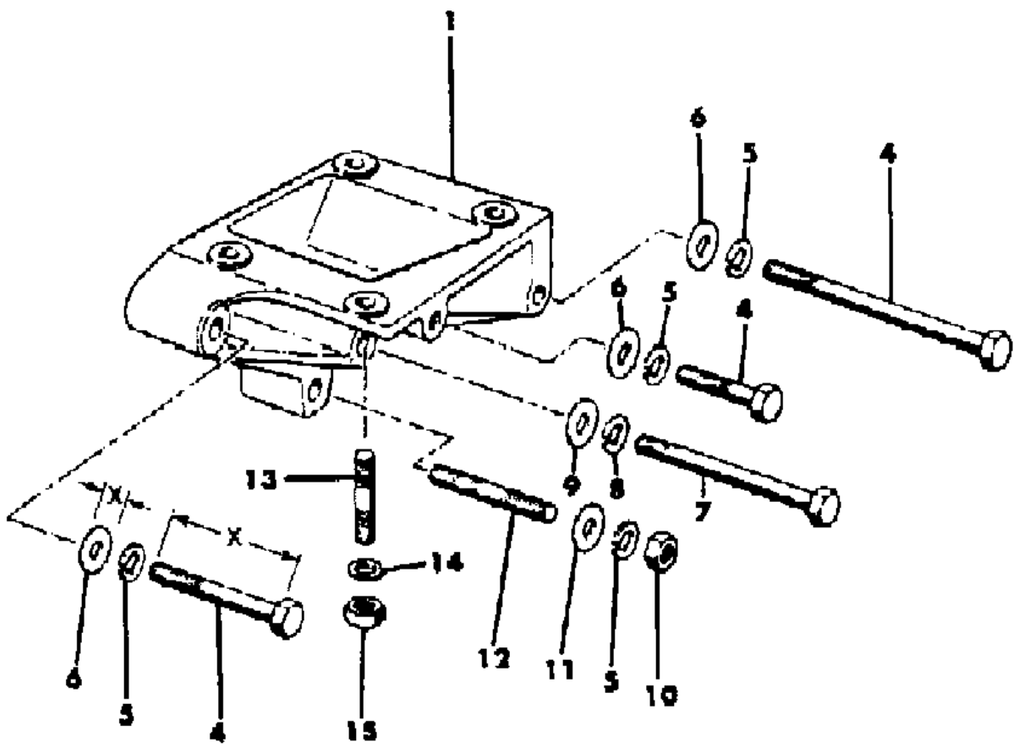

ITEM	PART NUMBER	QTY	BODY	MODEL	DESCRIPTION
1	J322 7681	1			BRACKET
2	J323 4689	1			BRACE
3	J027 4882	3			BOLT
4					BOLT
	S018 0147	AR			1.25" Long
	J018 0161	AR			3.25" Long
5	J400 4809	AR			WASHER
6					WASHER
	J400 1102	AR			.37" Thick
	J400 3807	AR			.43" Thick
	J400 1116	AR			.46" Thick
7					BOLT
	J018 9295	1			4.5" Long
	J021 5511	1			5.6" Long
8	J400 3803	AR			WASHER
9	J400 1102	AR			WASHER
10	J027 1506	1			NUT
11	J400 1116	AR			WASHER
12	J400 5587	1			STUD
13	J400 3917	4			STUD
14	J013 8489	4			WASHER
15	J012 0369	4			NUT

MODEL CODES

16=Cherokee 2 Dr.(1981-83)
17=Cherokee 2 Dr.(1981-83)
73=Cherokee 2WD-2 Dr.(1984-86)
74=Cherokee 2WD-4 Dr.(1984-86)
18=Cherokee 4 Dr.(1981-83)
77=Cherokee 4WD-2 Dr.(1984-86)
78=Cherokee 4WD-4 Dr.(1984-86)
85=CJ-5 (1981-83)
86=CJ-6(1981)
87=CJ-7(1981-86)
88=CJ-8, Scrambler(1981-86)
64=Comanche 2WD-6 Ft. Box(1986)
66=Comanche 2WD-7 Ft. Box(1986)
63=Comanche 4WD-6 Ft. Box(1986)
65=Comanche 4WD-7 Ft. Box(1986)
15=Grand Wagoneer 4 Dr.(1984-86)
25=J-10 Truck 7 Ft. Box(1981-84)
26=J10 Truck 8 Ft. Box(1981-86)
27=J-20 Truck 8 Ft. Box(1981-86)
15=Wagoneer 4 Dr.(1981-83)
75=Wagoneer 4WD-4 Dr.(1984-86)

BODY
CJ=CJ-5, CJ-6, CJ-7, CJ-8, Scrambler(1981-86)
MJ=Comanche Pickup(1986)

STYLES
SJ=Wagoneer(1981-83), Grand Wagoneer(1984-86), Cherokee(1981-83), J-10, J-20(1981-86)
XJ=Wagoneer(1984-86), Cherokee(1984-86)

AR = Use as Required - = Non Illustrated Part P.A.R. = Paint as Required

« RETURN TO GROUP INDEX

COMPRESSOR MOUNTING EIGHT CYLINDER WITH AMERICAN AIR CJ-5,6,7,8, SCRAMBLER
Figure 24-3400

81J24 3400

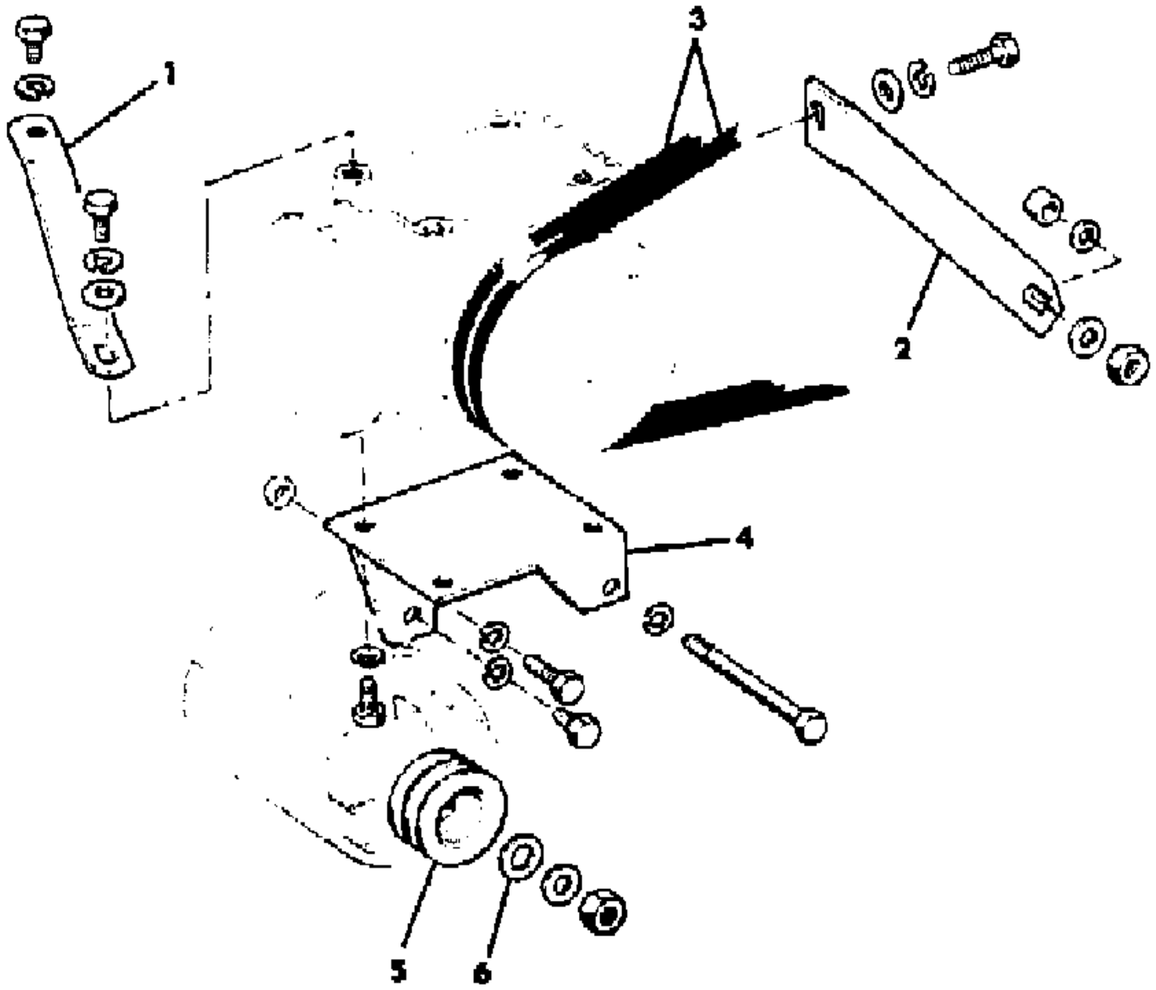

ITEM	PART NUMBER	QTY	BODY	MODEL	DESCRIPTION
1	J813 1727	1			BRACKET, Compressor Mounting
2	J813 1726	1			BRACKET, Compressor Mounting
3	J813 1730	2			BELT, Compressor
4	J813 1725	1			BRACKET, Compressor Mounting
5	J813 1728	1			PULLEY, Alternator
6	J813 1729	1			SPACER

MODEL CODES

16=Cherokee 2 Dr.(1981-83)	78=Cherokee 4WD-4 Dr.(1984-86)	64=Comanche 2WD-6 Ft. Box(1986)	25=J-10 Truck 7 Ft. Box(1981-84)
17=Cherokee 2 Dr.(1981-83)	85=CJ-5 (1981-83)	66=Comanche 2WD-7 Ft. Box(1986)	26=J10 Truck 8 Ft. Box(1981-86)
73=Cherokee 2WD-2 Dr.(1984-86)	86=CJ-6(1981)	63=Comanche 4WD-6 Ft. Box(1986)	27=J-20 Truck 8 Ft. Box(1981-86)
74=Cherokee 2WD-4 Dr.(1984-86)	87=CJ-7(1981-86)	65=Comanche 4WD-7 Ft. Box(1986)	15=Wagoneer 4 Dr.(1981-83)
18=Cherokee 4 Dr.(1981-83)	88=CJ-8, Scrambler(1981-86)	15=Grand Wagoneer 4 Dr.(1984-86)	75=Wagoneer 4WD-4 Dr.(1984-86)
77=Cherokee 4WD-2 Dr.(1984-86)			

BODY
CJ=CJ-5, CJ-6, CJ-7, CJ-8, Scrambler(1981-86)
MJ=Comanche Pickup(1986)

STYLES
SJ=Wagoneer(1981-83), Grand Wagoneer(1984-86), Cherokee(1981-83), J-10, J-20(1981-86)
XJ=Wagoneer(1984-86), Cherokee(1984-86)

AR = Use as Required - = Non Illustrated Part P.A.R. = Paint as Required

« RETURN TO GROUP INDEX

COMPRESSOR MOUNTING FOUR CYLINDER WITH FACTORY AIR XJ CHEROKEE, XJ WAGONEER, COMANCHE
Figure 24-3500

81J24 3500

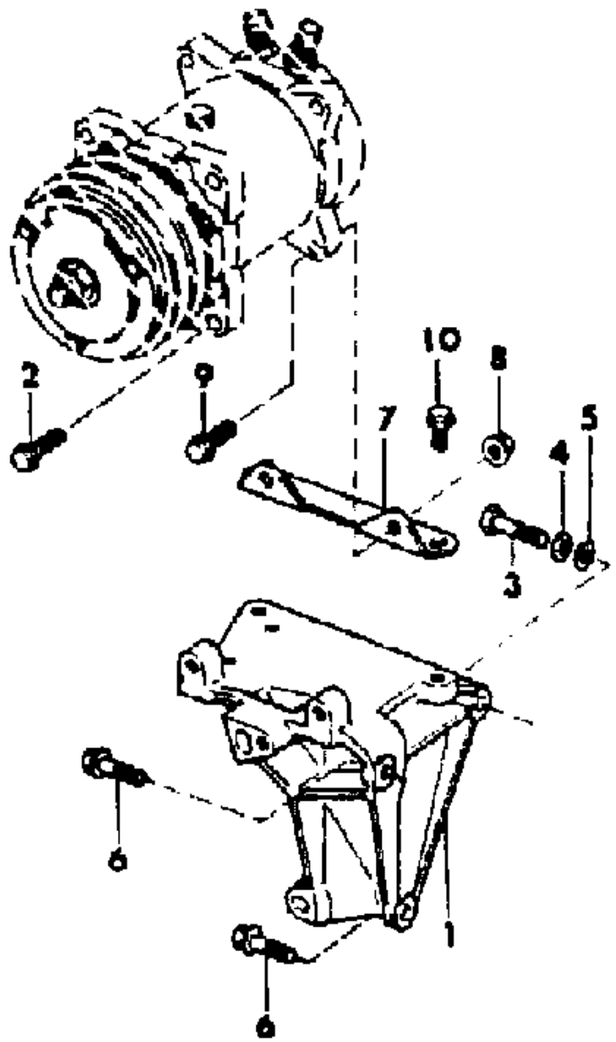

ITEM	PART NUMBER	QTY	BODY	MODEL	DESCRIPTION
1	5300 0530	1			BRACKET
2	3420 1869	2			BOLT
3	J018 0129	1			BOLT
4	J012 0382	1			WASHER
5	J400 1102	1			WASHER
6	J400 6995	2			BOLT
7	5300 0529	1			BRACKET
8	1150 1850	8			NUT
9	1150 2689	2			BOLT
10	3420 1868	2			BOLT

MODEL CODES

16=Cherokee 2 Dr.(1981-83)
17=Cherokee 2 Dr.(1981-83)
73=Cherokee 2WD-2 Dr.(1984-86)
74=Cherokee 2WD-4 Dr.(1984-86)
18=Cherokee 4 Dr.(1981-83)
77=Cherokee 4WD-2 Dr.(1984-86)
78=Cherokee 4WD-4 Dr.(1984-86)
85=CJ-5 (1981-83)
86=CJ-6(1981)
87=CJ-7(1981-86)
88=CJ-8, Scrambler(1981-86)
64=Comanche 2WD-6 Ft. Box(1986)
66=Comanche 2WD-7 Ft. Box(1986)
63=Comanche 4WD-6 Ft. Box(1986)
65=Comanche 4WD-7 Ft. Box(1986)
15=Grand Wagoneer 4 Dr.(1984-86)
25=J-10 Truck 7 Ft. Box(1981-84)
26=J10 Truck 8 Ft. Box(1981-86)
27=J-20 Truck 8 Ft. Box(1981-86)
15=Wagoneer 4 Dr.(1981-83)
75=Wagoneer 4WD-4 Dr.(1984-86)

BODY
CJ=CJ-5, CJ-6, CJ-7, CJ-8, Scrambler(1981-86)
MJ=Comanche Pickup(1986)

STYLES
SJ=Wagoneer(1981-83), Grand Wagoneer(1984-86), Cherokee(1981-83), J-10, J-20(1981-86)
XJ=Wagoneer(1984-86), Cherokee(1984-86)

AR = Use as Required - = Non Illustrated Part P.A.R. = Paint as Required

« RETURN TO GROUP INDEX

COMPRESSOR MOUNTING FOUR CYLINDER OR DIESEL WITH AMERICAN AIR XJ CHEROKEE, XJ WAGONEER, COMANCHE
Figure 24-3600

81J24 3600

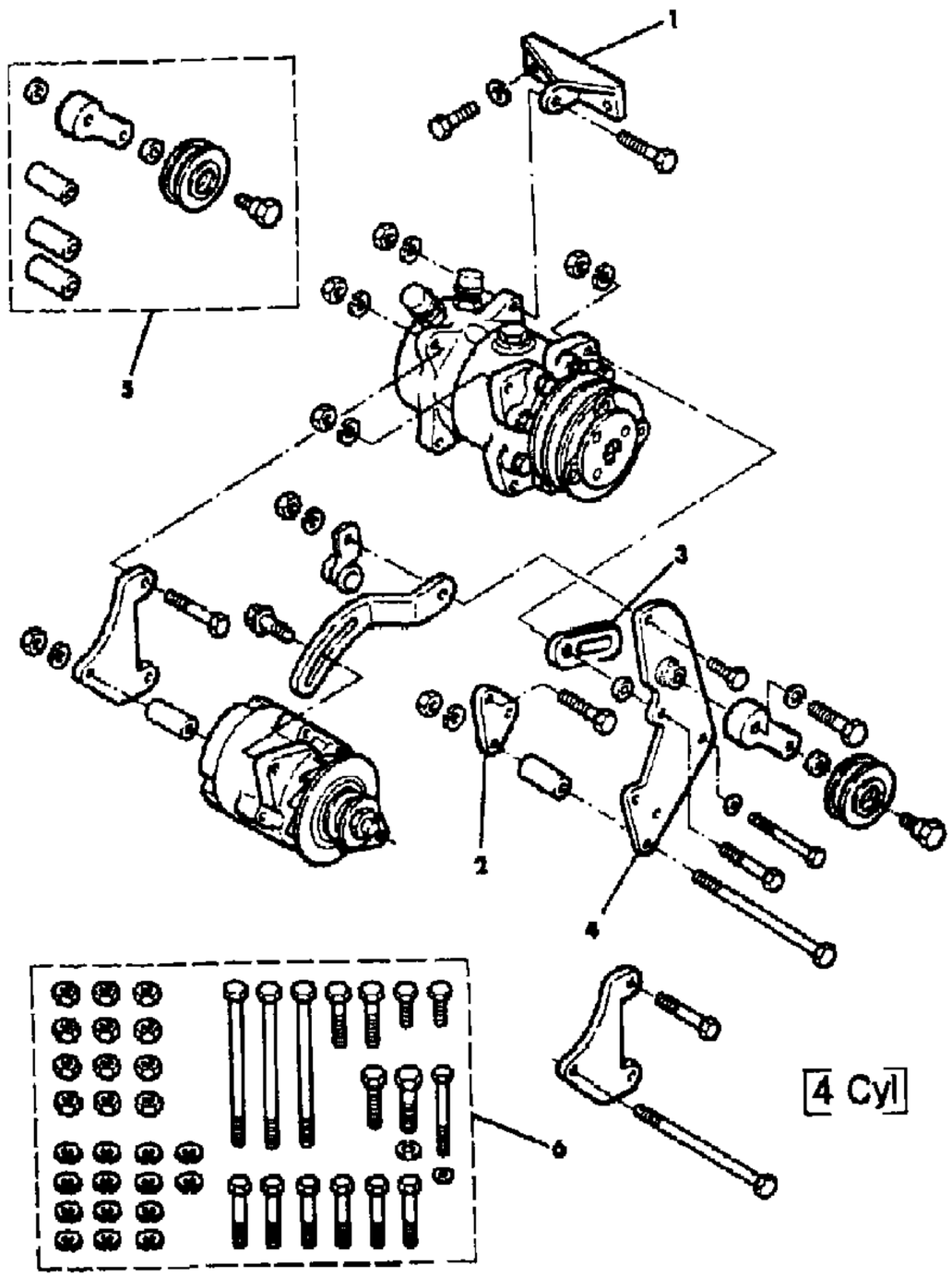

ITEM	PART NUMBER	QTY	BODY	MODEL	DESCRIPTION
1	8350 1919	1			BRACE
2	8350 1918	1			SUPPORT
3	8350 2593	1			BRACKET
4	8350 1917	1			BRACKET
5	8350 1857	1			IDLER PACKAGE ***
6	8350 1922	1			BOLT PACKAGE

MODEL CODES
16=Cherokee 2 Dr.(1981-83)
17=Cherokee 2 Dr.(1981-83)
73=Cherokee 2WD-2 Dr.(1984-86)
74=Cherokee 2WD-4 Dr.(1984-86)
18=Cherokee 4 Dr.(1981-83)
77=Cherokee 4WD-2 Dr.(1984-86)
78=Cherokee 4WD-4 Dr.(1984-86)
85=CJ-5 (1981-83)
86=CJ-6(1981)
87=CJ-7(1981-86)
88=CJ-8, Scrambler(1981-86)
64=Comanche 2WD-6 Ft. Box(1986)
66=Comanche 2WD-7 Ft. Box(1986)
63=Comanche 4WD-6 Ft. Box(1986)
65=Comanche 4WD-7 Ft. Box(1986)
15=Grand Wagoneer 4 Dr.(1984-86)
25=J-10 Truck 7 Ft. Box(1981-84)
26=J10 Truck 8 Ft. Box(1981-86)
27=J-20 Truck 8 Ft. Box(1981-86)
15=Wagoneer 4 Dr.(1981-83)
75=Wagoneer 4WD-4 Dr.(1984-86)

BODY
CJ=CJ-5, CJ-6, CJ-7, CJ-8, Scrambler(1981-86)
MJ=Comanche Pickup(1986)

STYLES
SJ=Wagoneer(1981-83), Grand Wagoneer(1984-86), Cherokee(1981-83), J-10, J-20(1981-86)
XJ=Wagoneer(1984-86), Cherokee(1984-86)

AR = Use as Required - = Non Illustrated Part P.A.R. = Paint as Required

« RETURN TO GROUP INDEX

COMPRESSOR MOUNTING SIX CYLINDER WITH FACTORY AIR XJ CHEROKEE, XJ WAGONEER, COMANCHE
Figure 24-3700

81J24 3700

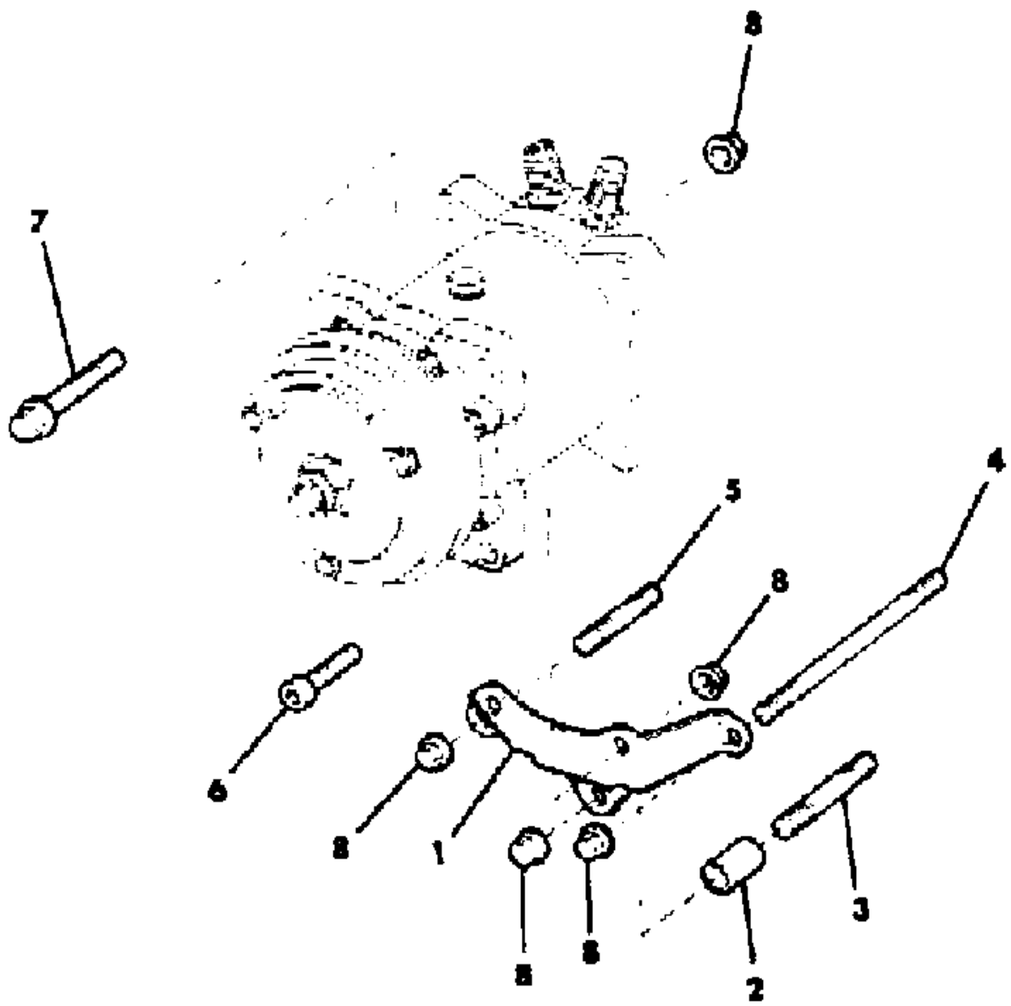

ITEM	PART NUMBER	QTY	BODY	MODEL	DESCRIPTION
1	5300 0623	1			BRACKET
2	J325 1284	1			SPACER
3	3420 1568	1			STUD
4	3420 1569	1			STUD
5	3420 1567	1			STUD
6	J420 0446	2			BOLT
7	3420 2047	1			BOLT
8	1150 1850	8			NUT

MODEL CODES

16=Cherokee 2 Dr.(1981-83)
17=Cherokee 2 Dr.(1981-83)
73=Cherokee 2WD-2 Dr.(1984-86)
74=Cherokee 2WD-4 Dr.(1984-86)
18=Cherokee 4 Dr.(1981-83)
77=Cherokee 4WD-2 Dr.(1984-86)
78=Cherokee 4WD-4 Dr.(1984-86)
85=CJ-5 (1981-83)
86=CJ-6(1981)
87=CJ-7(1981-86)
88=CJ-8, Scrambler(1981-86)
64=Comanche 2WD-6 Ft. Box(1986)
66=Comanche 2WD-7 Ft. Box(1986)
63=Comanche 4WD-6 Ft. Box(1986)
65=Comanche 4WD-7 Ft. Box(1986)
15=Grand Wagoneer 4 Dr.(1984-86)
25=J-10 Truck 7 Ft. Box(1981-84)
26=J10 Truck 8 Ft. Box(1981-86)
27=J-20 Truck 8 Ft. Box(1981-86)
15=Wagoneer 4 Dr.(1981-83)
75=Wagoneer 4WD-4 Dr.(1984-86)

BODY
CJ=CJ-5, CJ-6, CJ-7, CJ-8, Scrambler(1981-86)
MJ=Comanche Pickup(1986)

STYLES
SJ=Wagoneer(1981-83), Grand Wagoneer(1984-86), Cherokee(1981-83), J-10, J-20(1981-86)
XJ=Wagoneer(1984-86), Cherokee(1984-86)

AR = Use as Required - = Non Illustrated Part P.A.R. = Paint as Required

« RETURN TO GROUP INDEX

COMPRESSOR MOUNTING SIX CYLINDER WITH AMERICAN AIR XJ CHEROKEE, XJ WAGONEER, COMANCHE
Figure 24-3800

81J24 3800

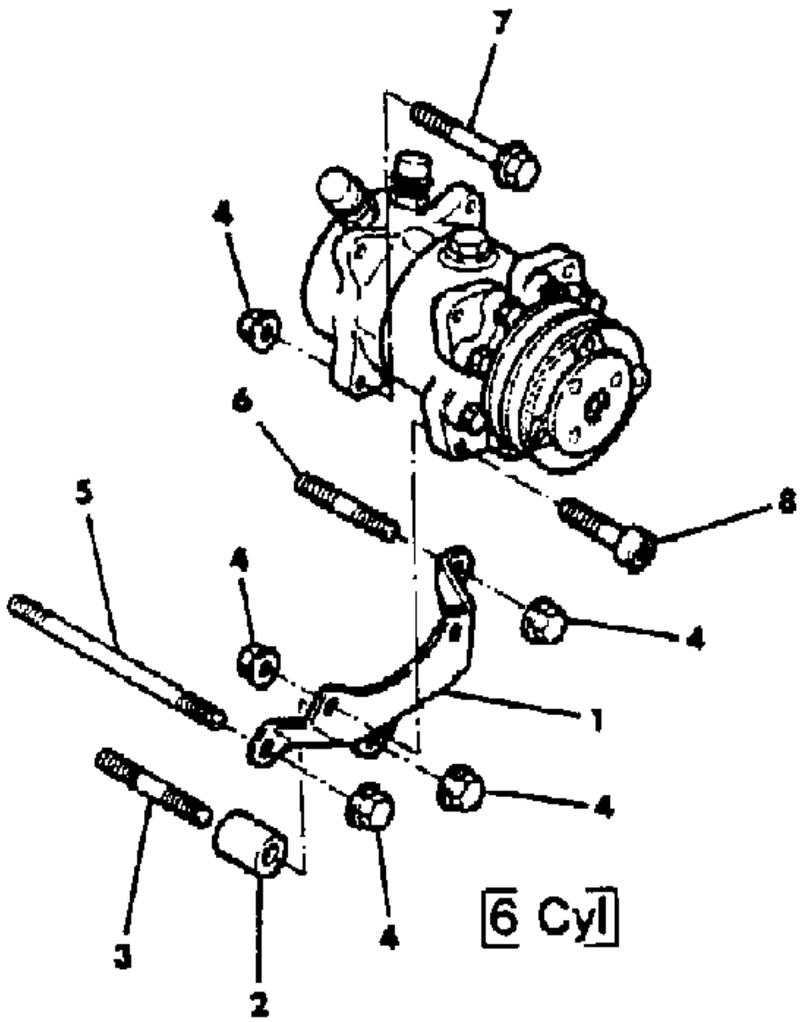

ITEM	PART NUMBER	QTY	BODY	MODEL	DESCRIPTION
1	5300 0623	1			BRACKET
2	J325 1284	1			SPACER
3	3420 1568	1			STUD
4	1150 1850	6			NUT
5	3420 1569	1			STUD
6	3420 1567	1			STUD
7	3420 2047	1			BOLT
8	J420 0446	2			BOLT

MODEL CODES

16=Cherokee 2 Dr.(1981-83)
17=Cherokee 2 Dr.(1981-83)
73=Cherokee 2WD-2 Dr.(1984-86)
74=Cherokee 2WD-4 Dr.(1984-86)
18=Cherokee 4 Dr.(1981-83)
77=Cherokee 4WD-2 Dr.(1984-86)
78=Cherokee 4WD-4 Dr.(1984-86)
85=CJ-5 (1981-83)
86=CJ-6(1981)
87=CJ-7(1981-86)
88=CJ-8, Scrambler(1981-86)
64=Comanche 2WD-6 Ft. Box(1986)
66=Comanche 2WD-7 Ft. Box(1986)
63=Comanche 4WD-6 Ft. Box(1986)
65=Comanche 4WD-7 Ft. Box(1986)
15=Grand Wagoneer 4 Dr.(1984-86)
25=J-10 Truck 7 Ft. Box(1981-84)
26=J10 Truck 8 Ft. Box(1981-86)
27=J-20 Truck 8 Ft. Box(1981-86)
15=Wagoneer 4 Dr.(1981-83)
75=Wagoneer 4WD-4 Dr.(1984-86)

BODY
CJ=CJ-5, CJ-6, CJ-7, CJ-8, Scrambler(1981-86)
MJ=Comanche Pickup(1986)

STYLES
SJ=Wagoneer(1981-83), Grand Wagoneer(1984-86), Cherokee(1981-83), J-10, J-20(1981-86)
XJ=Wagoneer(1984-86), Cherokee(1984-86)

AR = Use as Required - = Non Illustrated Part P.A.R. = Paint as Required

« RETURN TO GROUP INDEX

COMPRESSOR MOUNTING DIESEL WITH FACTORY AIR XJ CHEROKEE, XJ WAGONEER, COMANCHE
Figure 24-3900

81J24 3900

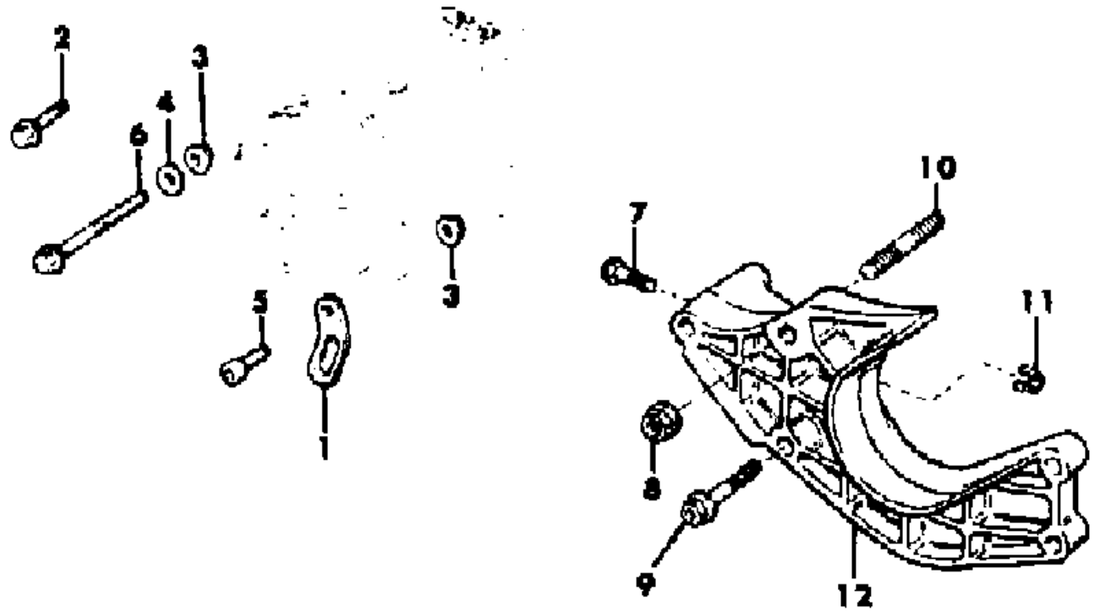

ITEM	PART NUMBER	QTY	BODY	MODEL	DESCRIPTION
1	5300 5157	1			STRAP
2	3420 2079	4			SCREW
3	1150 2812	2			NUT
4	J400 1104	1			WASHER
5	J420 0446	1			BOLT
6	3420 2834	1			BOLT
7	3420 1869	1			BOLT
8	J420 0081	1			NUT
9	3420 2047	1			BOLT
10	3420 1744	1			STUD
11	5300 0548	1			SPACER
12	5300 1771	1			BRACKET

MODEL CODES
16=Cherokee 2 Dr.(1981-83)
17=Cherokee 2 Dr.(1981-83)
73=Cherokee 2WD-2 Dr.(1984-86)
74=Cherokee 2WD-4 Dr.(1984-86)
18=Cherokee 4 Dr.(1981-83)
77=Cherokee 4WD-2 Dr.(1984-86)
78=Cherokee 4WD-4 Dr.(1984-86)
85=CJ-5 (1981-83)
86=CJ-6(1981)
87=CJ-7(1981-86)
88=CJ-8, Scrambler(1981-86)
64=Comanche 2WD-6 Ft. Box(1986)
66=Comanche 2WD-7 Ft. Box(1986)
63=Comanche 4WD-6 Ft. Box(1986)
65=Comanche 4WD-7 Ft. Box(1986)
15=Grand Wagoneer 4 Dr.(1984-86)
25=J-10 Truck 7 Ft. Box(1981-84)
26=J10 Truck 8 Ft. Box(1981-86)
27=J-20 Truck 8 Ft. Box(1981-86)
15=Wagoneer 4 Dr.(1981-83)
75=Wagoneer 4WD-4 Dr.(1984-86)

BODY
CJ=CJ-5, CJ-6, CJ-7, CJ-8, Scrambler(1981-86)
MJ=Comanche Pickup(1986)

STYLES
SJ=Wagoneer(1981-83), Grand Wagoneer(1984-86), Cherokee(1981-83), J-10, J-20(1981-86)
XJ=Wagoneer(1984-86), Cherokee(1984-86)

AR = Use as Required - = Non Illustrated Part P.A.R. = Paint as Required

« RETURN TO GROUP INDEX

COMPRESSOR MOUNTING SIX CYLINDER WITH SANDEN FACTORY AIR SJ CHEROKEE, SJ WAGONEER, J10, J20
Figure 24-4000

81J24 4000

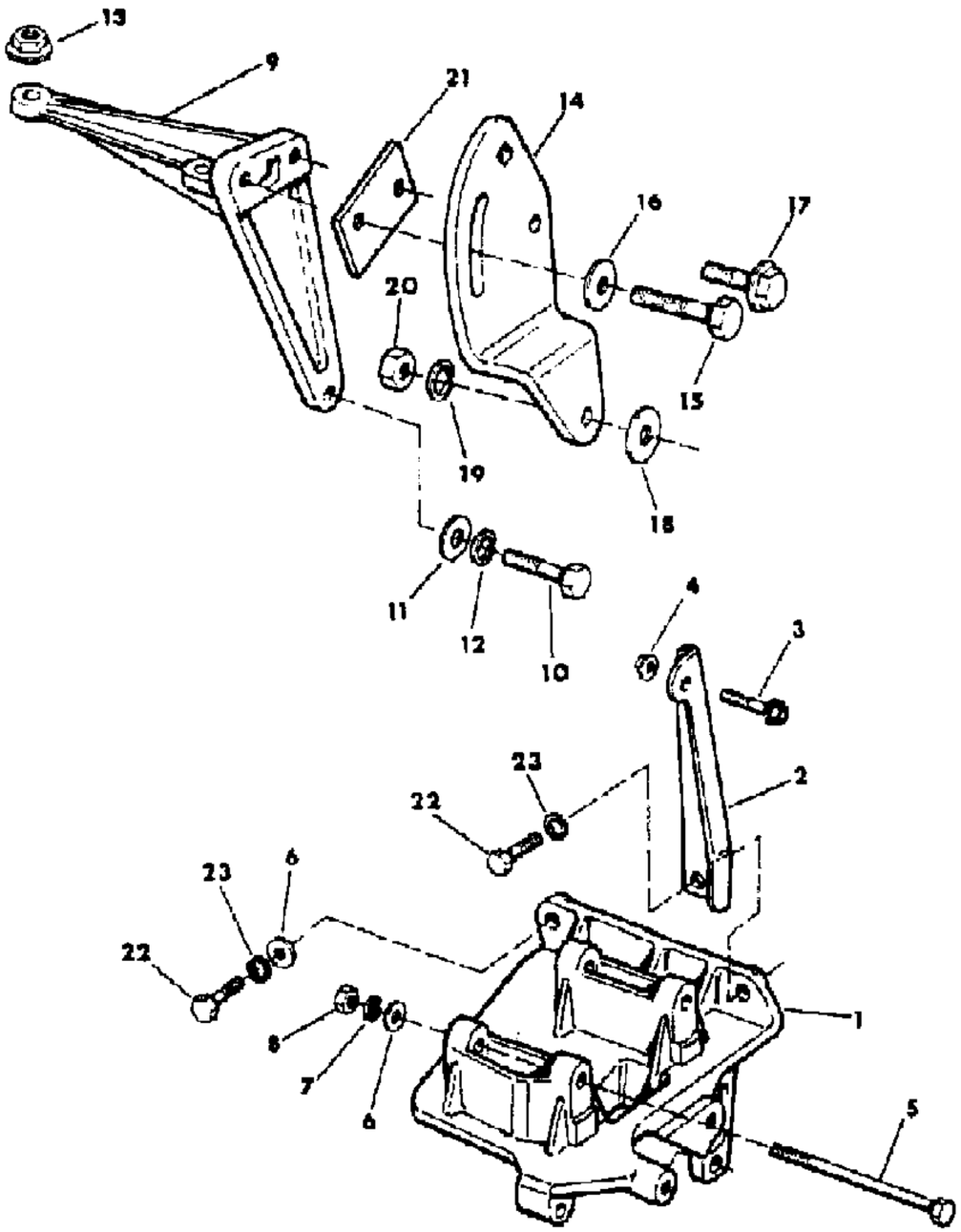

ITEM	PART NUMBER	QTY	BODY	MODEL	DESCRIPTION
1	J323 9470	1			BRACKET, Compressor Mounting
2	J323 9633	1			BRACE, Compressor
3	J400 4010	1			SCREW
4	S941 1507	1			NUT
5	J941 7624	2			SCREW
6	J400 1102	AR			WASHER
7	J012 0930	2			WASHER
8	S941 8738	2			NUT
9	J324 2191	1			BRACKET, Idler Pulley Mounting
10	J018 0126	1			SCREW
11	J400 1104	1			WASHER
12	J012 0382	1			WASHER
13	J400 4005	1			NUT
14	J322 4472	1			BRACKET, Idler
15	J400 4100	1			SCREW
16	J400 5390	1			WASHER
17	J027 3776	1			SCREW
18	J400 1289	1			SPACER
19	J400 1898	1			WASHER, Lock
20	S012 0370	1			NUT
21	J322 4473	1			SPACER
22	J018 0123	AR			SCREW
23	J400 3803	AR			WASHER

MODEL CODES

16=Cherokee 2 Dr.(1981-83)
17=Cherokee 2 Dr.(1981-83)
73=Cherokee 2WD-2 Dr.(1984-86)
74=Cherokee 2WD-4 Dr.(1984-86)
18=Cherokee 4 Dr.(1981-83)
77=Cherokee 4WD-2 Dr.(1984-86)
78=Cherokee 4WD-4 Dr.(1984-86)
85=CJ-5 (1981-83)
86=CJ-6(1981)
87=CJ-7(1981-86)
88=CJ-8, Scrambler(1981-86)
64=Comanche 2WD-6 Ft. Box(1986)
66=Comanche 2WD-7 Ft. Box(1986)
63=Comanche 4WD-6 Ft. Box(1986)
65=Comanche 4WD-7 Ft. Box(1986)
15=Grand Wagoneer 4 Dr.(1984-86)
25=J-10 Truck 7 Ft. Box(1981-84)
26=J10 Truck 8 Ft. Box(1981-86)
27=J-20 Truck 8 Ft. Box(1981-86)
15=Wagoneer 4 Dr.(1981-83)
75=Wagoneer 4WD-4 Dr.(1984-86)

BODY
CJ=CJ-5, CJ-6, CJ-7, CJ-8, Scrambler(1981-86)
MJ=Comanche Pickup(1986)

STYLES
SJ=Wagoneer(1981-83), Grand Wagoneer(1984-86), Cherokee(1981-83), J-10, J-20(1981-86)
XJ=Wagoneer(1984-86), Cherokee(1984-86)

AR = Use as Required - = Non Illustrated Part P.A.R. = Paint as Required

« RETURN TO GROUP INDEX

COMPRESSOR MOUNTING SIX CYLINDER WITH FACTORY AIR SJ CHEROKEE, SJ WAGONEER, J10, J20
Figure 24-4100

81J24 4100

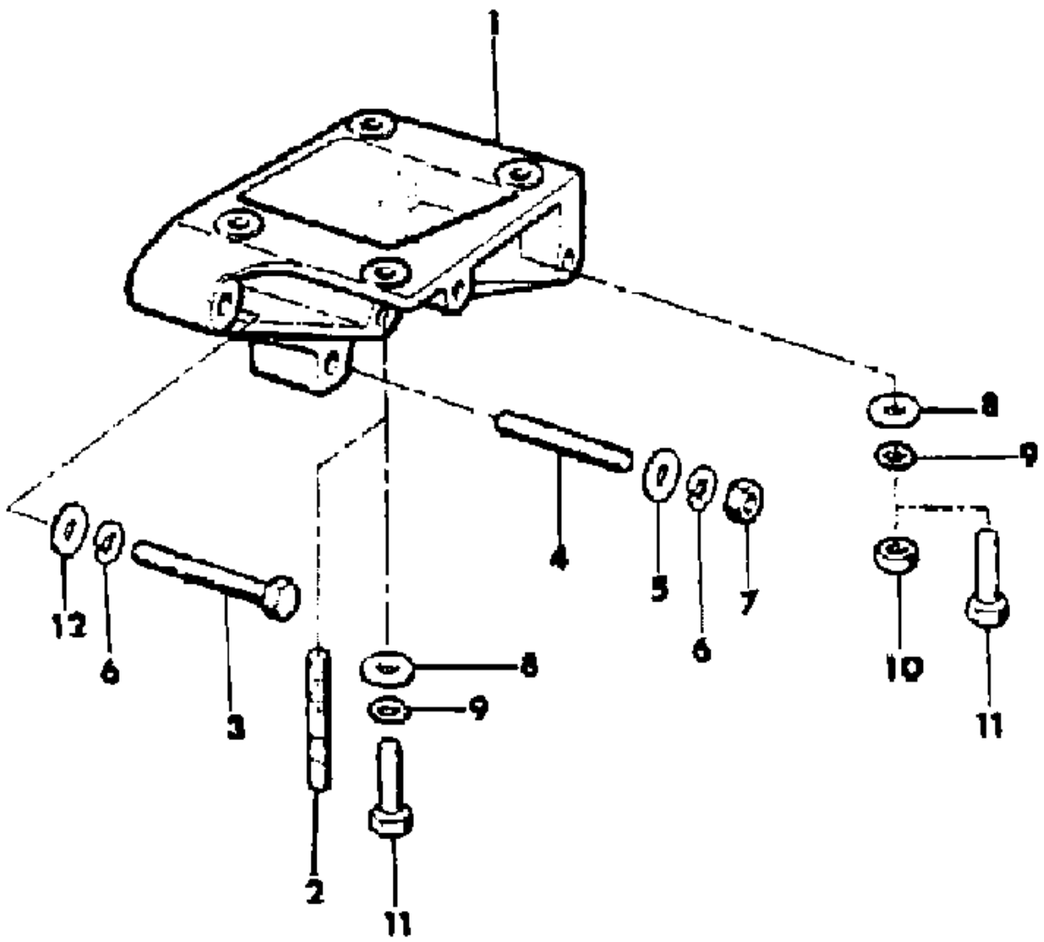

ITEM	PART NUMBER	QTY	BODY	MODEL	DESCRIPTION
1	J323 7579	1			BRACKET, Compressor Mounting
2	J400 3917	4			STUD
3	J018 0161	1			SCREW
4	J400 5587	1			STUD
5	J400 1116	1			WASHER
6	J400 4809	2			WASHER
7	J027 1506	1			NUT
8	J400 1102	4			WASHER
9	J012 0930	4			WASHER
10	J012 0369	3			NUT
11	J018 0122	AR			SCREW
12	J400 1289	1			SPACER

MODEL CODES

16=Cherokee 2 Dr.(1981-83)
17=Cherokee 2 Dr.(1981-83)
73=Cherokee 2WD-2 Dr.(1984-86)
74=Cherokee 2WD-4 Dr.(1984-86)
18=Cherokee 4 Dr.(1981-83)
77=Cherokee 4WD-2 Dr.(1984-86)
78=Cherokee 4WD-4 Dr.(1984-86)
85=CJ-5 (1981-83)
86=CJ-6(1981)
87=CJ-7(1981-86)
88=CJ-8, Scrambler(1981-86)
64=Comanche 2WD-6 Ft. Box(1986)
66=Comanche 2WD-7 Ft. Box(1986)
63=Comanche 4WD-6 Ft. Box(1986)
65=Comanche 4WD-7 Ft. Box(1986)
15=Grand Wagoneer 4 Dr.(1984-86)
25=J-10 Truck 7 Ft. Box(1981-84)
26=J10 Truck 8 Ft. Box(1981-86)
27=J-20 Truck 8 Ft. Box(1981-86)
15=Wagoneer 4 Dr.(1981-83)
75=Wagoneer 4WD-4 Dr.(1984-86)

BODY
CJ=CJ-5, CJ-6, CJ-7, CJ-8, Scrambler(1981-86)
MJ=Comanche Pickup(1986)

STYLES
SJ=Wagoneer(1981-83), Grand Wagoneer(1984-86), Cherokee(1981-83), J-10, J-20(1981-86)
XJ=Wagoneer(1984-86), Cherokee(1984-86)

AR = Use as Required - = Non Illustrated Part P.A.R. = Paint as Required

« RETURN TO GROUP INDEX

COMPRESSOR MOUNTING SIX CYLINDER WITH AMERICAN AIR SJ CHEROKEE, SJ WAGONEER, J10, J20
Figure 24-4200

81J24 4200

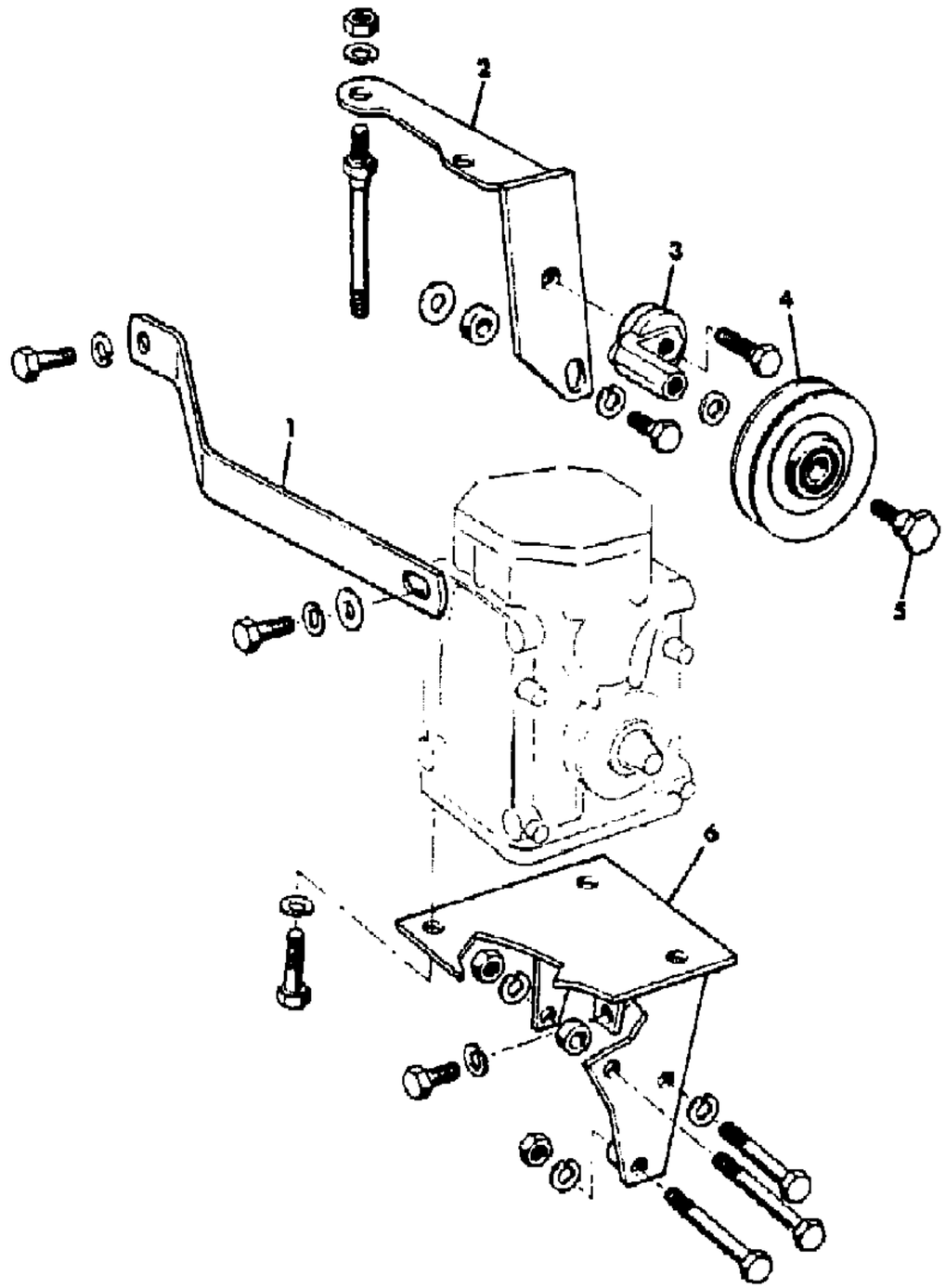

ITEM	PART NUMBER	QTY	BODY	MODEL	DESCRIPTION
1	J813 3875	1			BRACKET, Compressor Mounting
2	J812 6186	1			BRACKET, Compressor Mounting
3	J812 6189	1			ECCENTRIC
4	J812 1949	1			PULLEY, Idler
5	J812 1950	1			BOLT
6	J812 6183	1			BRACKET, Compressor Mounting

MODEL CODES

16=Cherokee 2 Dr.(1981-83)
17=Cherokee 2 Dr.(1981-83)
73=Cherokee 2WD-2 Dr.(1984-86)
74=Cherokee 2WD-4 Dr.(1984-86)
18=Cherokee 4 Dr.(1981-83)
77=Cherokee 4WD-2 Dr.(1984-86)
78=Cherokee 4WD-4 Dr.(1984-86)
85=CJ-5 (1981-83)
86=CJ-6(1981)
87=CJ-7(1981-86)
88=CJ-8, Scrambler(1981-86)
64=Comanche 2WD-6 Ft. Box(1986)
66=Comanche 2WD-7 Ft. Box(1986)
63=Comanche 4WD-6 Ft. Box(1986)
65=Comanche 4WD-7 Ft. Box(1986)
15=Grand Wagoneer 4 Dr.(1984-86)
25=J-10 Truck 7 Ft. Box(1981-84)
26=J10 Truck 8 Ft. Box(1981-86)
27=J-20 Truck 8 Ft. Box(1981-86)
15=Wagoneer 4 Dr.(1981-83)
75=Wagoneer 4WD-4 Dr.(1984-86)

BODY
CJ=CJ-5, CJ-6, CJ-7, CJ-8, Scrambler(1981-86)
MJ=Comanche Pickup(1986)

STYLES
SJ=Wagoneer(1981-83), Grand Wagoneer(1984-86), Cherokee(1981-83), J-10, J-20(1981-86)
XJ=Wagoneer(1984-86), Cherokee(1984-86)

AR = Use as Required - = Non Illustrated Part P.A.R. = Paint as Required

« RETURN TO GROUP INDEX

COMPRESSOR MOUNTING EIGHT CYLINDER WITH YORK FACTORY AIR SJ CHEROKEE, SJ WAGONEER, J10, J20
Figure 24-3300

81J24 4300

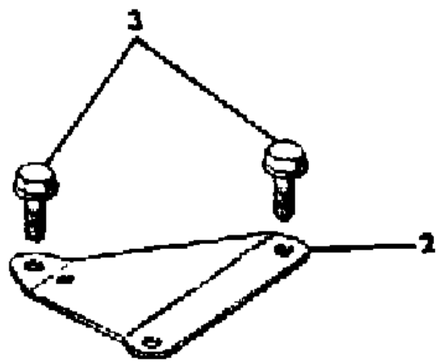

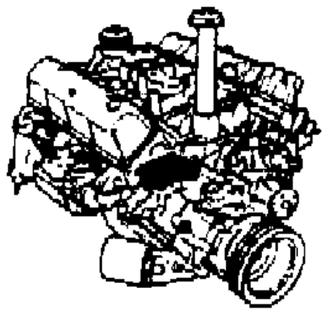

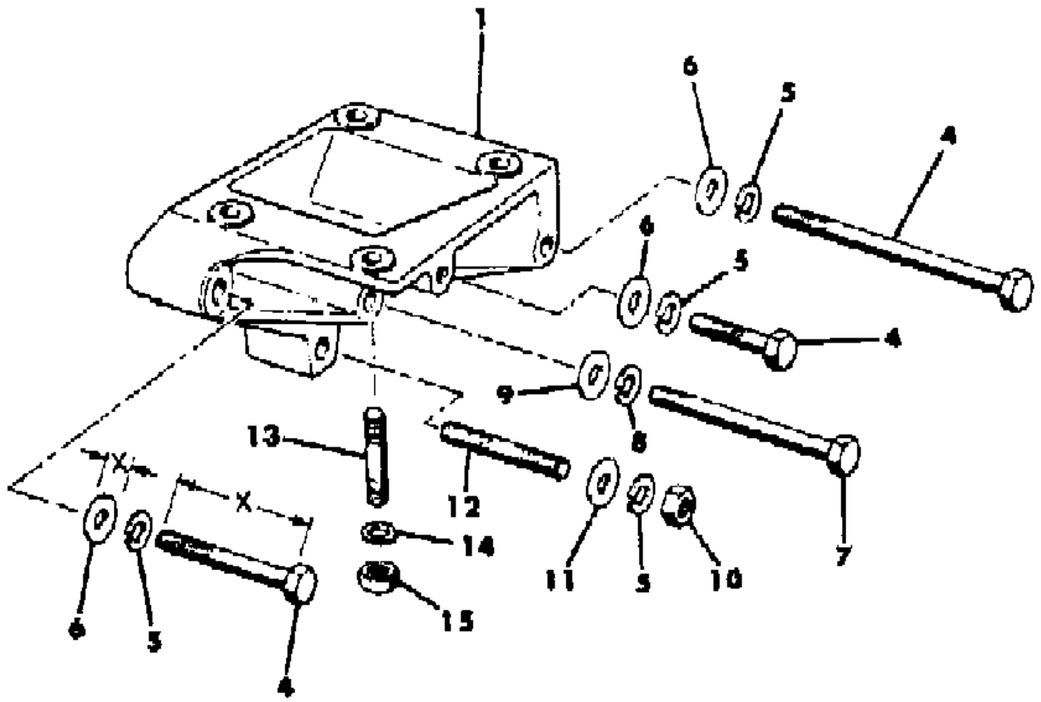

ITEM	PART NUMBER	QTY	BODY	MODEL	DESCRIPTION
1	J813 1725	1			BRACKET, Mounting
2	J323 4689	1			BRACKET
3	J027 4882	3			SCREW
4					BOLT
	S018 0147	AR			X=1.25"
	S018 0161	AR			X=3.25"
5	J400 4809	AR			WASHER
6					SPACER
	J400 1289	AR			X=.47"x.19"
					WASHER
	J400 1102	AR			X=.38"
	J400 3807	AR			X=.44"
	J400 1116	AR			X=.47"
7					BOLT
	J018 9295	1			X=4.50"
	J021 5511	1			X=5.60"
8	J400 3803	1			WASHER, Lock
9	J400 1102	1			WASHER, Plain
10	J027 1506	1			NUT
11	J400 1116	1			WASHER, Plain
12	J400 5587	1			STUD
13	J400 3917	4			STUD
14	J013 8489	1			WASHER, Lock
15	J012 0369	3			NUT

MODEL CODES

16=Cherokee 2 Dr.(1981-83)	78=Cherokee 4WD-4 Dr.(1984-86)	64=Comanche 2WD-6 Ft. Box(1986)	25=J-10 Truck 7 Ft. Box(1981-84)
17=Cherokee 2 Dr.(1981-83)	85=CJ-5 (1981-83)	66=Comanche 2WD-7 Ft. Box(1986)	26=J10 Truck 8 Ft. Box(1981-86)
73=Cherokee 2WD-2 Dr.(1984-86)	86=CJ-6(1981)	63=Comanche 4WD-6 Ft. Box(1986)	27=J-20 Truck 8 Ft. Box(1981-86)
74=Cherokee 2WD-4 Dr.(1984-86)	87=CJ-7(1981-86)	65=Comanche 4WD-7 Ft. Box(1986)	15=Wagoneer 4 Dr.(1981-83)
18=Cherokee 4 Dr.(1981-83)	88=CJ-8, Scrambler(1981-86)	15=Grand Wagoneer 4 Dr.(1984-86)	75=Wagoneer 4WD-4 Dr.(1984-86)
77=Cherokee 4WD-2 Dr.(1984-86)			

BODY
CJ=CJ-5, CJ-6, CJ-7, CJ-8, Scrambler(1981-86)
MJ=Comanche Pickup(1986)

STYLES
SJ=Wagoneer(1981-83), Grand Wagoneer(1984-86), Cherokee(1981-83), J-10, J-20(1981-86)
XJ=Wagoneer(1984-86), Cherokee(1984-86)

AR = Use as Required - = Non Illustrated Part P.A.R. = Paint as Required

« RETURN TO GROUP INDEX

COMPRESSOR MOUNTING EIGHT CYLINDER WITH AMERICAN AIR SJ CHEROKEE, SJ WAGONEER, J10, J20
Figure 24-4400

81J24 4400

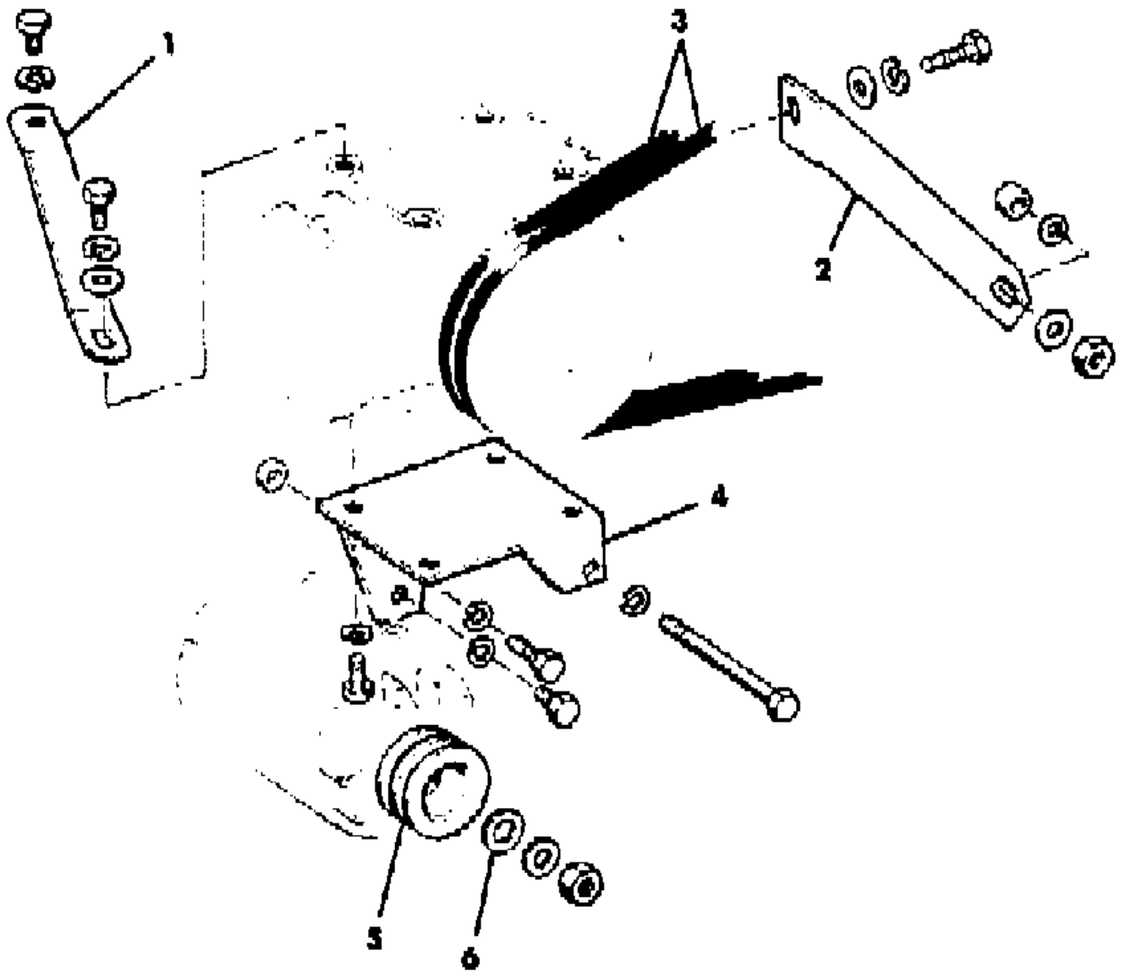

ITEM	PART NUMBER	QTY	BODY	MODEL	DESCRIPTION
1	J813 1727	1			BRACKET, Compressor Mounting
2	J813 1726	1			BRACKET, Compressor Mounting
3	J813 1730	2			BELT
4	J813 1725	1			BRACKET, Compressor Mounting
5	J813 1728	1			PULLEY, Alternator
6	J813 1729	1			SPACER

MODEL CODES

16=Cherokee 2 Dr.(1981-83)
17=Cherokee 2 Dr.(1981-83)
73=Cherokee 2WD-2 Dr.(1984-86)
74=Cherokee 2WD-4 Dr.(1984-86)
18=Cherokee 4 Dr.(1981-83)
77=Cherokee 4WD-2 Dr.(1984-86)
78=Cherokee 4WD-4 Dr.(1984-86)
85=CJ-5 (1981-83)
86=CJ-6(1981)
87=CJ-7(1981-86)
88=CJ-8, Scrambler(1981-86)
64=Comanche 2WD-6 Ft. Box(1986)
66=Comanche 2WD-7 Ft. Box(1986)
63=Comanche 4WD-6 Ft. Box(1986)
65=Comanche 4WD-7 Ft. Box(1986)
15=Grand Wagoneer 4 Dr.(1984-86)
25=J-10 Truck 7 Ft. Box(1981-84)
26=J10 Truck 8 Ft. Box(1981-86)
27=J-20 Truck 8 Ft. Box(1981-86)
15=Wagoneer 4 Dr.(1981-83)
75=Wagoneer 4WD-4 Dr.(1984-86)

BODY
CJ=CJ-5, CJ-6, CJ-7, CJ-8, Scrambler(1981-86)
MJ=Comanche Pickup(1986)

STYLES
SJ=Wagoneer(1981-83), Grand Wagoneer(1984-86), Cherokee(1981-83), J-10, J-20(1981-86)
XJ=Wagoneer(1984-86), Cherokee(1984-86)

AR = Use as Required - = Non Illustrated Part P.A.R. = Paint as Required

« RETURN TO GROUP INDEX

AIR DISTRIBUTION DUCTS CJ-5,6,7,8, SCRAMBLER
Figure 24-4500

81J24 4500

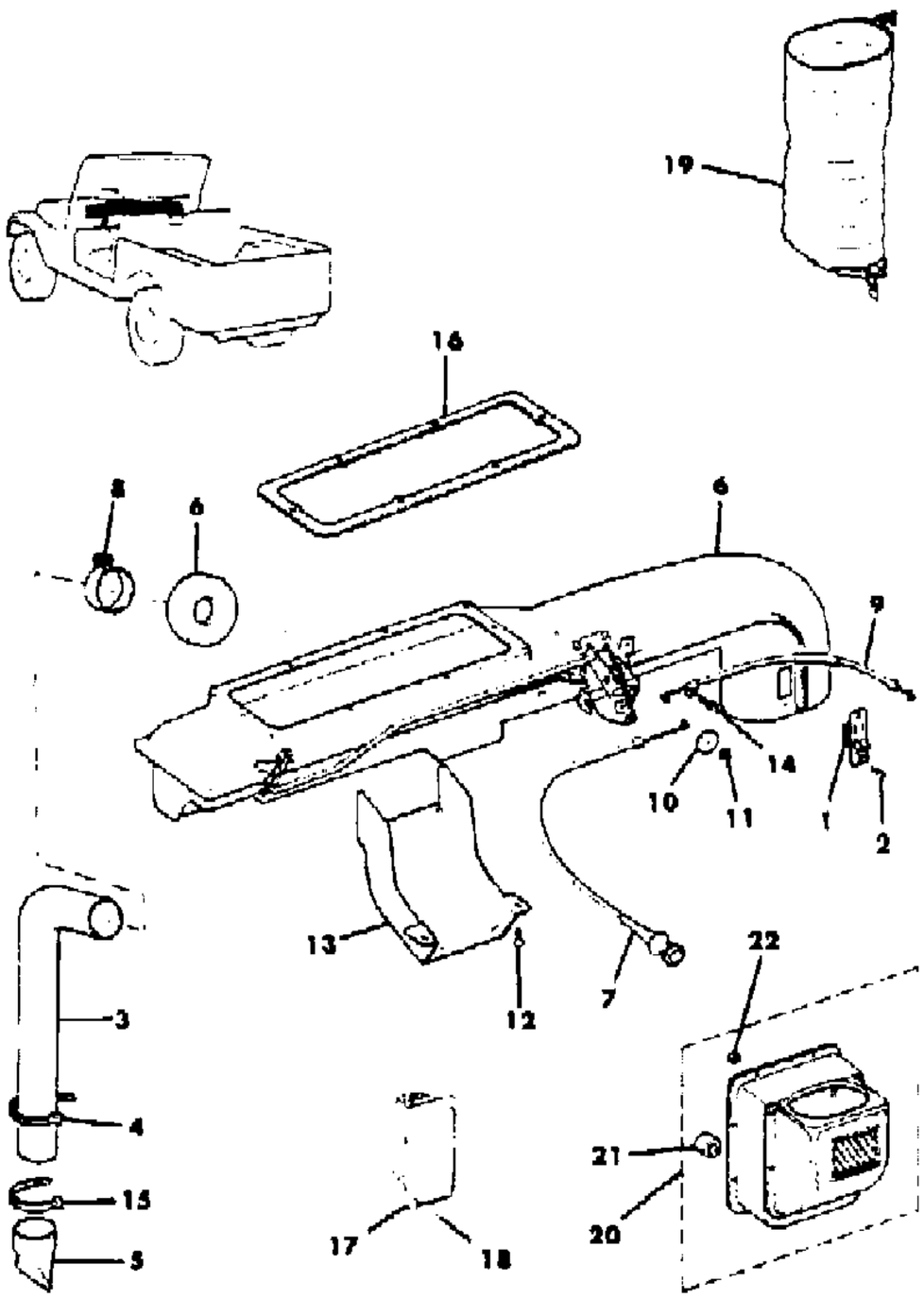

ITEM	PART NUMBER	QTY	BODY	MODEL	DESCRIPTION
1	J096 1042	1			RESISTOR
2	J400 5522	2			SCREW
3	J546 3813	1			HOSE, Drain
4	J400 6101	1			STRAP
5	J098 7079	1			CAP, Drain
6					DUCT, Air
	J575 8809	1			
	J575 8810	1			EXPORT, Left Hand Drive, without Heater And Defroster
	J575 8943	1			EXPORT, Right Hand Drive, with Heater And Defroster
	J575 8944	1			EXPORT, Right Hand Drive, without Heater And Defroster
7	J546 3657	1			CABLE, Fresh Air
8	J320 3078	1			CLAMP
9	J546 3658	1			CABLE, Air Vent
10	J400 5897	1			WASHER
11	J400 5533	1			NUT, Push
12	J400 5817	3			SCREW
13	J546 2731	1			DEFLECTOR, Air Vent
14	J812 0054	1			SCREW
15	J322 3227	1			STRAP
16	5505 2592	1			GASKET, Air Vent
17					DUCT, Fresh Air Intake
	J805 1766	2			EXPORT, without Heater And Defroster, with World Cab
18					SCREW
	J400 1701	24			EXPORT, without Heater And Defroster, with World Cab
19					HOSE
	J575 1683	1			EXPORT, Right Hand Drive
20					INLET, Air
	J575 1743	1			EXPORT, without Heater And Defroster
21					SEAL, Drain
	J546 2712	1			EXPORT, without Heater And Defroster
22					SPACER
	J575 1404	2			EXPORT, without Heater And Defroster

MODEL CODES

16=Cherokee 2 Dr.(1981-83)	78=Cherokee 4WD-4 Dr.(1984-86)	64=Comanche 2WD-6 Ft. Box(1986)	25=J-10 Truck 7 Ft. Box(1981-84)
17=Cherokee 2 Dr.(1981-83)	85=CJ-5 (1981-83)	66=Comanche 2WD-7 Ft. Box(1986)	26=J10 Truck 8 Ft. Box(1981-86)
73=Cherokee 2WD-2 Dr.(1984-86)	86=CJ-6(1981)	63=Comanche 4WD-6 Ft. Box(1986)	27=J-20 Truck 8 Ft. Box(1981-86)
74=Cherokee 2WD-4 Dr.(1984-86)	87=CJ-7(1981-86)	65=Comanche 4WD-7 Ft. Box(1986)	15=Wagoneer 4 Dr.(1981-83)
18=Cherokee 4 Dr.(1981-83)	88=CJ-8, Scrambler(1981-86)	15=Grand Wagoneer 4 Dr.(1984-86)	75=Wagoneer 4WD-4 Dr.(1984-86)
77=Cherokee 4WD-2 Dr.(1984-86)			

BODY
CJ=CJ-5, CJ-6, CJ-7, CJ-8, Scrambler(1981-86)
MJ=Comanche Pickup(1986)

STYLES
SJ=Wagoneer(1981-83), Grand Wagoneer(1984-86), Cherokee(1981-83), J-10, J-20(1981-86)
XJ=Wagoneer(1984-86), Cherokee(1984-86)

AR = Use as Required - = Non Illustrated Part P.A.R. = Paint as Required

« RETURN TO GROUP INDEX

AIR DISTRIBUTION DUCTS XJ CHEROKEE, XJ WAGONEER COMANCHE
Figure 24-4600

81J24 4600

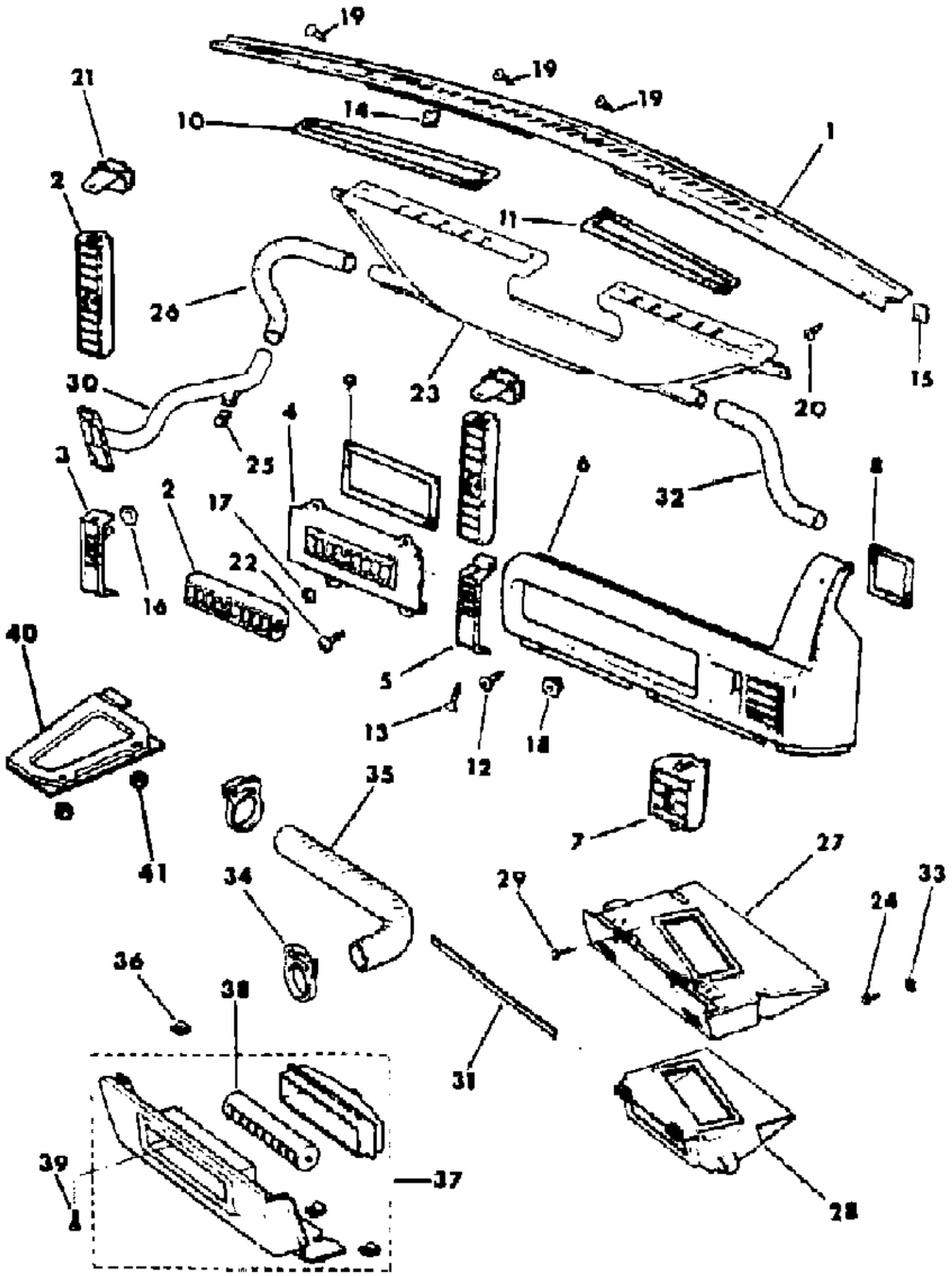

ITEM	PART NUMBER	QTY	BODY	MODEL	DESCRIPTION
1	5500 0915	1			BEZEL, Defroster
2					OUTLET, Air
	5500 0373	3			Black
	5500 4027	3			Black And Chrome
3					BEZEL, Side Window
	5500 0931	1			Black
	5500 4025	1			Black And Chrome
4					OUTLET, Air
	5500 2908	1			Black
	5500 3165	1			Black And Chrome
5					BEZEL, Center Lower
	5500 2056	1			Black
	5500 4023	1			Black And Chrome
6					BEZEL, Right Lower
	5500 2532	1			Plain Trim, P.A.R.
	5500 4513	1			Chrome Trim, P.A.R.
7					OUTLET, Air
	5500 0372	1			Black
	5500 4026	1			Black And Chrome
8	5500 2875	1			GASKET
9	5500 3880	1			GASKET
10	5500 2424	1			SEAL
11	5500 2425	1			SEAL
12	1150 1012	4			SCREW
13	1150 1148	1			SCREW
14	3420 1497	4			NUT
15	J400 4223	8			NUT
16	1150 1932	2			NUT
17	J400 0459	4			NUT
18	J400 4689	2			NUT
19	1150 0056	3			SCREW
20	1150 1119	2			SCREW
21	3420 1292	4			SCREW
22	3420 1292	4			SCREW
23	5500 0364	1			DUCT, Defroster
24	3420 1340	2			SCREW
25	1150 0656	1			NUT
26	5500 0368	1			DUCT, Defroster
27	5600 0610	1			DUCT, Center Floor without Console

MODEL CODES
16=Cherokee 2 Dr.(1981-83)
17=Cherokee 2 Dr.(1981-83)
73=Cherokee 2WD-2 Dr.(1984-86)
74=Cherokee 2WD-4 Dr.(1984-86)
18=Cherokee 4 Dr.(1981-83)
77=Cherokee 4WD-2 Dr.(1984-86)
78=Cherokee 4WD-4 Dr.(1984-86)
85=CJ-5 (1981-83)
86=CJ-6(1981)
87=CJ-7(1981-86)
88=CJ-8, Scrambler(1981-86)
64=Comanche 2WD-6 Ft. Box(1986)
66=Comanche 2WD-7 Ft. Box(1986)
63=Comanche 4WD-6 Ft. Box(1986)
65=Comanche 4WD-7 Ft. Box(1986)
15=Grand Wagoneer 4 Dr.(1984-86)
25=J-10 Truck 7 Ft. Box(1981-84)
26=J10 Truck 8 Ft. Box(1981-86)
27=J-20 Truck 8 Ft. Box(1981-86)
15=Wagoneer 4 Dr.(1981-83)
75=Wagoneer 4WD-4 Dr.(1984-86)

BODY
CJ=CJ-5, CJ-6, CJ-7, CJ-8, Scrambler(1981-86)
MJ=Comanche Pickup(1986)

STYLES
SJ=Wagoneer(1981-83), Grand Wagoneer(1984-86), Cherokee(1981-83), J-10, J-20(1981-86)
XJ=Wagoneer(1984-86), Cherokee(1984-86)

AR = Use as Required - = Non Illustrated Part P.A.R. = Paint as Required

« RETURN TO GROUP INDEX »

AIR DISTRIBUTION DUCTS XJ CHEROKEE, XJ WAGONEER COMANCHE
Figure 24-4600

81J24 4600

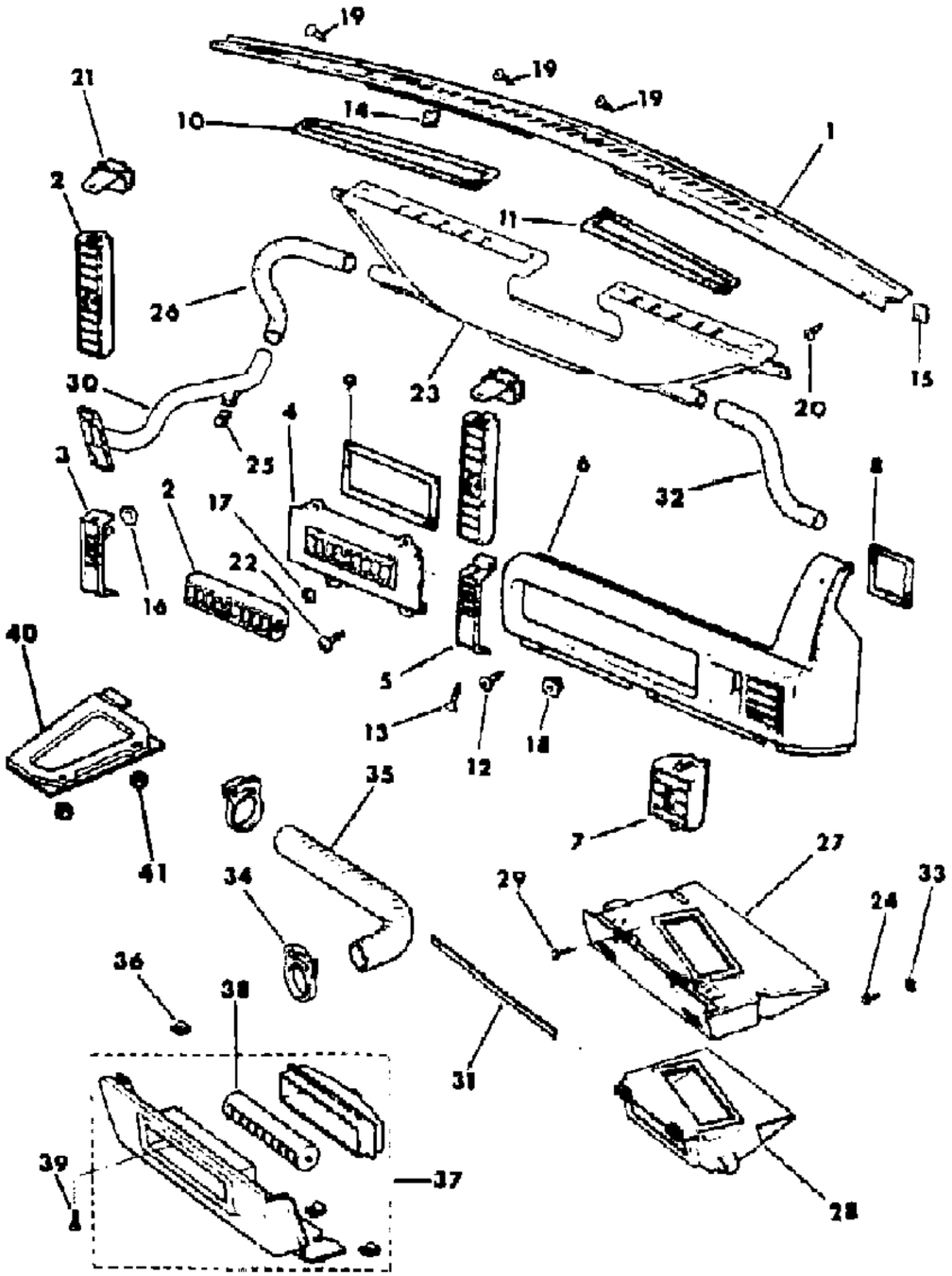

ITEM	PART NUMBER	QTY	BODY	MODEL	DESCRIPTION
28	5600 0584	1			DUCT, Center Floor with Console
29	1150 1011	2			SCREW
30	5500 2205	1			DUCT, Side Window
31	5600 1218	1			OVERLAY ***
32	5500 5896	1			DUCT, Side Window
33	1150 0656	2			NUT
34	J400 6818	2			CLAMP
35	5500 0368	1			TUBE
36	J400 0383	4			NUT
37	5501 1090	1			BEZEL, Left Lower, P.A.R.
38	5500 0929	1			OUTLET, Air
39	3420 1361	AR			SCREW
40	5500 4897	1			CAP
41	1150 2722	2			NUT

MODEL CODES
16=Cherokee 2 Dr.(1981-83)
17=Cherokee 2 Dr.(1981-83)
73=Cherokee 2WD-2 Dr.(1984-86)
74=Cherokee 2WD-4 Dr.(1984-86)
18=Cherokee 4 Dr.(1981-83)
77=Cherokee 4WD-2 Dr.(1984-86)
78=Cherokee 4WD-4 Dr.(1984-86)
85=CJ-5 (1981-83)
86=CJ-6(1981)
87=CJ-7(1981-86)
88=CJ-8, Scrambler(1981-86)
64=Comanche 2WD-6 Ft. Box(1986)
66=Comanche 2WD-7 Ft. Box(1986)
63=Comanche 4WD-6 Ft. Box(1986)
65=Comanche 4WD-7 Ft. Box(1986)
15=Grand Wagoneer 4 Dr.(1984-86)
25=J-10 Truck 7 Ft. Box(1981-84)
26=J10 Truck 8 Ft. Box(1981-86)
27=J-20 Truck 8 Ft. Box(1981-86)
15=Wagoneer 4 Dr.(1981-83)
75=Wagoneer 4WD-4 Dr.(1984-86)

BODY
CJ=CJ-5, CJ-6, CJ-7, CJ-8, Scrambler(1981-86)
MJ=Comanche Pickup(1986)

STYLES
SJ=Wagoneer(1981-83), Grand Wagoneer(1984-86), Cherokee(1981-83), J-10, J-20(1981-86)
XJ=Wagoneer(1984-86), Cherokee(1984-86)

AR = Use as Required - = Non Illustrated Part P.A.R. = Paint as Required

« RETURN TO GROUP INDEX

AIR DISTRIBUTION DUCTS FRESH AIR SJ CHEROKEE, SJ WAGONEER, J10, J20
Figure 24-4700

81J24 4700

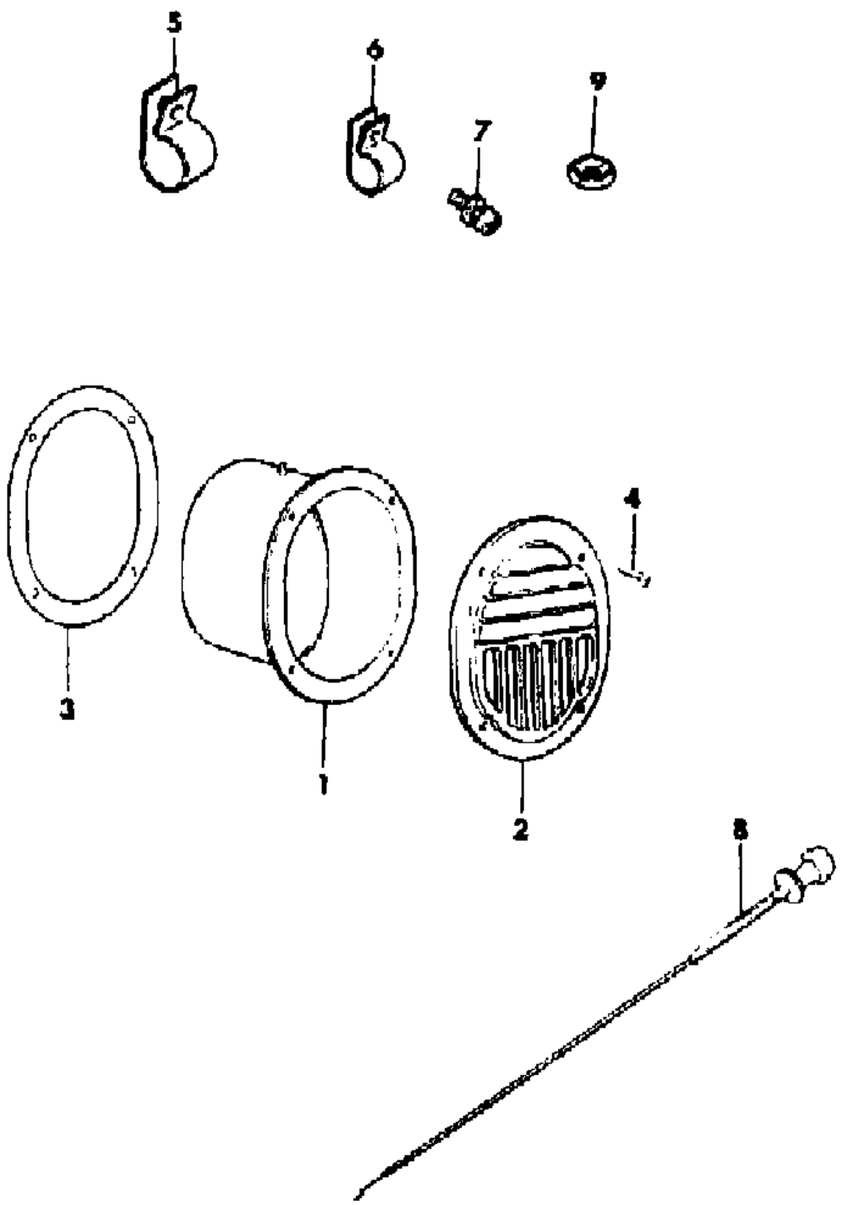

ITEM	PART NUMBER	QTY	BODY	MODEL	DESCRIPTION
1					DUCT, Fresh Air Intake
	J095 9518	1			Right
	J096 0889	1			Left
2	J096 0153	2			PLATE, Cover
3	J096 2430	2			GASKET
4	S016 1901	8			SCREW
5	J012 0523	1			CLIP
6	J012 0520	2			CLIP
7	J045 4782	2			SCREW
8					CABLE, Air Vent
					Right
	J546 2796	1			1981-85
	5600 1618	1			1986
					Left
	J546 2795	1			1981-85
	5600 1619	1			1986
9	J942 0168	2			NUT

MODEL CODES

16=Cherokee 2 Dr.(1981-83)	78=Cherokee 4WD-4 Dr.(1984-86)	64=Comanche 2WD-6 Ft. Box(1986)	25=J-10 Truck 7 Ft. Box(1981-84)
17=Cherokee 2 Dr.(1981-83)	85=CJ-5 (1981-83)	66=Comanche 2WD-7 Ft. Box(1986)	26=J10 Truck 8 Ft. Box(1981-86)
73=Cherokee 2WD-2 Dr.(1984-86)	86=CJ-6(1981)	63=Comanche 4WD-6 Ft. Box(1986)	27=J-20 Truck 8 Ft. Box(1981-86)
74=Cherokee 2WD-4 Dr.(1984-86)	87=CJ-7(1981-86)	65=Comanche 4WD-7 Ft. Box(1986)	15=Wagoneer 4 Dr.(1981-83)
18=Cherokee 4 Dr.(1981-83)	88=CJ-8, Scrambler(1981-86)	15=Grand Wagoneer 4 Dr.(1984-86)	75=Wagoneer 4WD-4 Dr.(1984-86)
77=Cherokee 4WD-2 Dr.(1984-86)			

BODY
CJ=CJ-5, CJ-6, CJ-7, CJ-8, Scrambler(1981-86)
MJ=Comanche Pickup(1986)

STYLES
SJ=Wagoneer(1981-83), Grand Wagoneer(1984-86), Cherokee(1981-83), J-10, J-20(1981-86)
XJ=Wagoneer(1984-86), Cherokee(1984-86)

AR = Use as Required - = Non Illustrated Part P.A.R. = Paint as Required

« RETURN TO GROUP INDEX

AIR DISTRIBUTION DUCTS 1981-85, HEATER AND DEFROSTER SJ CHEROKEE, SJ WAGONEER, J10, J20
Figure 24-4800

81J24 4800

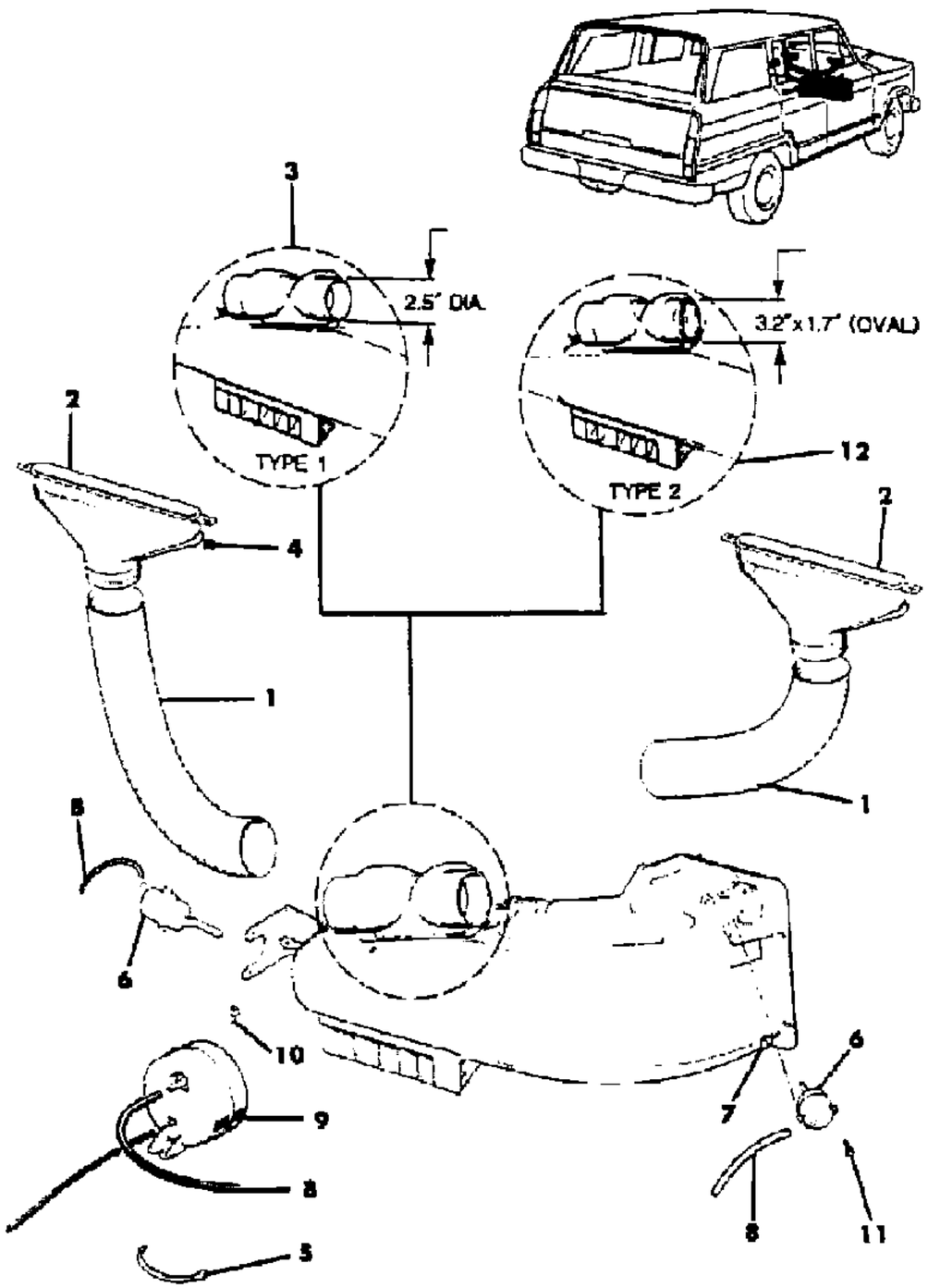

ITEM	PART NUMBER	QTY	BODY	MODEL	DESCRIPTION
1					HOSE
					1981-84: Type 1
	J096 0020	1			Right: 14", Modification Required
	J096 3283	1			Left: 24", Modification Required
					1984-85: Type 2
	J576 5324	1			Right
	J576 5325	1			Left
2					DUCT, Windshield Defroster
	J546 6642	1			Right
	J546 6641	1			Left
	J805 1768	1			Right: EXPORT, Right Hand Drive
	J575 8534	1			Left: EXPORT, Right Hand Drive
3					HOUSING ASSEMBLY, Heat Distributor ***
	J812 8781	1			1981-84: Type 1
4	J942 0863	4			NUT
5	J322 3227	1			STRAP
6	J546 6016	2			MOTOR, Vacuum
7	J942 3952	1			SCREW
8	J812 5810	AR			HOSE, Vacuum, Bulk
9	J374 1279	1			TANK, Vacuum
10	J942 6241	2			SCREW
11	J400 5057	4			SCREW
12					HOUSING ASSEMBLY, Heat Distributor ***
	J576 5313	1			1984-85: Type 2

MODEL CODES

16=Cherokee 2 Dr.(1981-83)	78=Cherokee 4WD-4 Dr.(1984-86)	64=Comanche 2WD-6 Ft. Box(1986)	25=J-10 Truck 7 Ft. Box(1981-84)
17=Cherokee 2 Dr.(1981-83)	85=CJ-5 (1981-83)	66=Comanche 2WD-7 Ft. Box(1986)	26=J10 Truck 8 Ft. Box(1981-86)
73=Cherokee 2WD-2 Dr.(1984-86)	86=CJ-6(1981)	63=Comanche 4WD-6 Ft. Box(1986)	27=J-20 Truck 8 Ft. Box(1981-86)
74=Cherokee 2WD-4 Dr.(1984-86)	87=CJ-7(1981-86)	65=Comanche 4WD-7 Ft. Box(1986)	15=Wagoneer 4 Dr.(1981-83)
18=Cherokee 4 Dr.(1981-83)	88=CJ-8, Scrambler(1981-86)	15=Grand Wagoneer 4 Dr.(1984-86)	75=Wagoneer 4WD-4 Dr.(1984-86)
77=Cherokee 4WD-2 Dr.(1984-86)			

BODY
CJ=CJ-5, CJ-6, CJ-7, CJ-8, Scrambler(1981-86)
MJ=Comanche Pickup(1986)

STYLES
SJ=Wagoneer(1981-83), Grand Wagoneer(1984-86), Cherokee(1981-83), J-10, J-20(1981-86)
XJ=Wagoneer(1984-86), Cherokee(1984-86)

AR = Use as Required - = Non Illustrated Part P.A.R. = Paint as Required

« RETURN TO GROUP INDEX

AIR DISTRIBUTION DUCTS 1986, HEATER AND DEFROSTER SJ CHEROKEE, SJ WAGONEER, J10
Figure 24-4900

81J24 4900

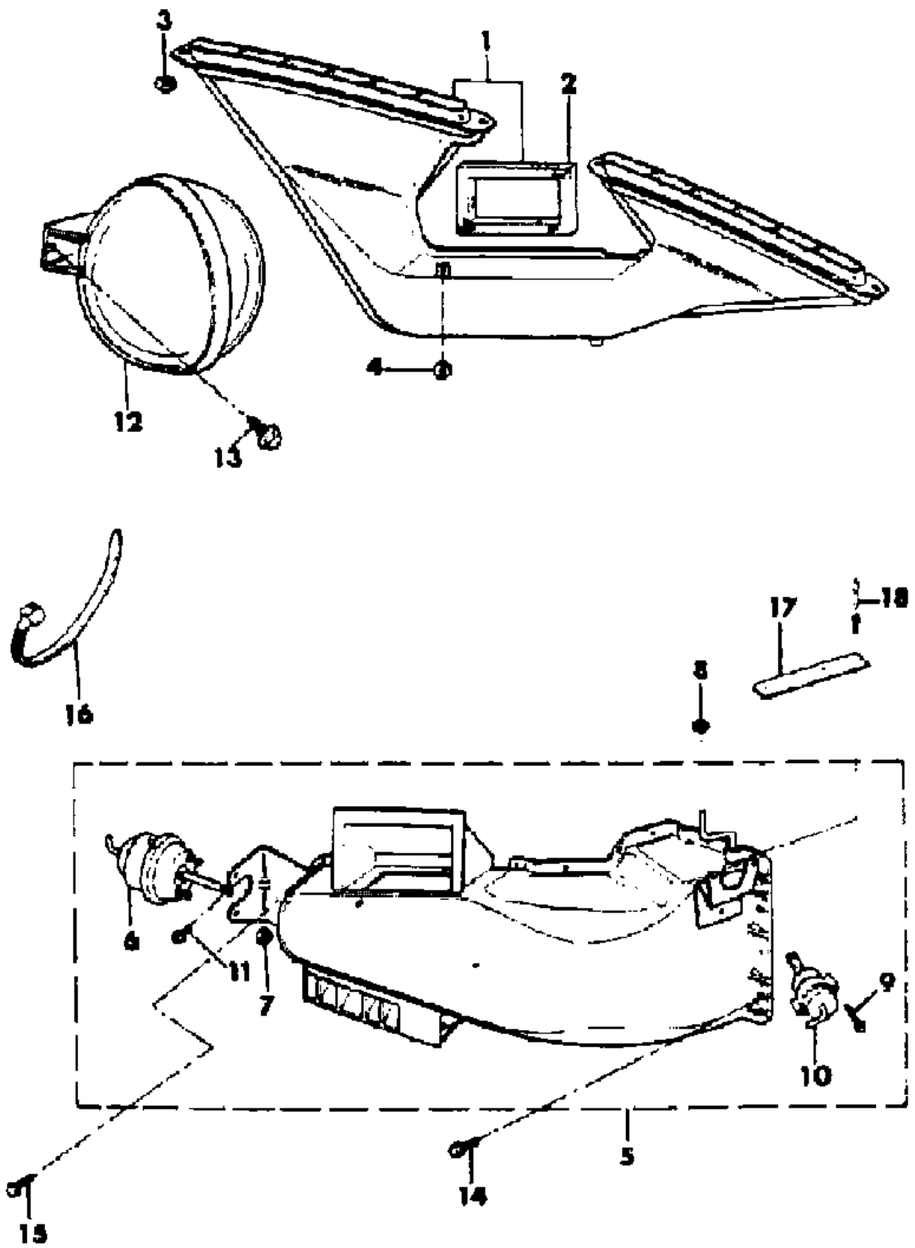

ITEM	PART NUMBER	QTY	BODY	MODEL	DESCRIPTION
1	5600 1689	1			DUCT, Windshield Defroster
2	5600 1837	1			SEAL, Duct
3	J942 0863	4			NUT
4	J400 3084	2			NUT
5	5600 1499	1			HOUSING ASSEMBLY, Heat Distributor ***
6	5600 1500	1			MOTOR, Vacuum
7	3420 1001	2			NUT
8	J400 1714	1			CLIP
9	J400 5057	2			SCREW
10	J546 6016	1			MOTOR, Vacuum
11	J400 3924	1			SCREW
12	J374 1279	1			TANK, Vacuum
13	J942 6241	2			SCREW
14	J942 3952	2			SCREW
15	S045 1673	1			SCREW
16	J322 3227	2			STRAP
17	5600 2687	1			BRACKET, Keyless Entry Relay
18	3420 1975	2			RIVET

MODEL CODES

16=Cherokee 2 Dr.(1981-83)
17=Cherokee 2 Dr.(1981-83)
73=Cherokee 2WD-2 Dr.(1984-86)
74=Cherokee 2WD-4 Dr.(1984-86)
18=Cherokee 4 Dr.(1981-83)
77=Cherokee 4WD-2 Dr.(1984-86)
78=Cherokee 4WD-4 Dr.(1984-86)
85=CJ-5 (1981-83)
86=CJ-6(1981)
87=CJ-7(1981-86)
88=CJ-8, Scrambler(1981-86)
64=Comanche 2WD-6 Ft. Box(1986)
66=Comanche 2WD-7 Ft. Box(1986)
63=Comanche 4WD-6 Ft. Box(1986)
65=Comanche 4WD-7 Ft. Box(1986)
15=Grand Wagoneer 4 Dr.(1984-86)
25=J-10 Truck 7 Ft. Box(1981-84)
26=J10 Truck 8 Ft. Box(1981-86)
27=J-20 Truck 8 Ft. Box(1981-86)
15=Wagoneer 4 Dr.(1981-83)
75=Wagoneer 4WD-4 Dr.(1984-86)

BODY
CJ=CJ-5, CJ-6, CJ-7, CJ-8, Scrambler(1981-86)
MJ=Comanche Pickup(1986)

STYLES
SJ=Wagoneer(1981-83), Grand Wagoneer(1984-86), Cherokee(1981-83), J-10, J-20(1981-86)
XJ=Wagoneer(1984-86), Cherokee(1984-86)

AR = Use as Required - = Non Illustrated Part P.A.R. = Paint as Required

« RETURN TO GROUP INDEX

ILLUSTRATION NOT AVAILABLE AT TIME OF PUBLICATION

GROUP 25 - EMISSION SYSTEMS

ILLUSTRATION TITLE	GROUP-FIG. NO.
PULSE AIR SYSTEMS	
PULSE AIR SYSTEM 1983-86 SIX CYLINDER CJ-5,7,8, SCRAMBLER, SJ WAGONS, J10	Fig. 25-100
AIR INJECTION SYSTEMS	
AIR INJECTION SYSTEM 1984-85 FOUR CYLINDER, GAS XJ CHEROKEE, XJ WAGONEER	Fig. 25-200
AIR INJECTION SYSTEM SIX CYLINDER XJ CHEROKEE, XJ WAGONEER, COMANCHE	Fig. 25-300
AIR INJECTION SYSTEM SIX CYLINDER CJ-5,6,7,8, SCRAMBLER, SJ WAGONEER, J10, J20	Fig. 25-350
AIR INJECTION SYSTEM EIGHT CYLINDER SJ WAGONEER, J10, J20	Fig. 25-400
EMISSION CONTROLS	
EMISSION CONTROLS 1981-83 GM FOUR CYLINDER CJ-5,6,7,8, SCRAMBLER	Fig. 25-500
EMISSION CONTROLS 1983-86 AMC FOUR CYLINDER CJ-5,7, SCRAMBLER	Fig. 25-600
EMISSION CONTROL VACUUM HARNESS SIX CYLINDER CJ-5,6,7,8, SCRAMBLER	Fig. 25-700
EMISSION CONTROL COMPONENTS SIX CYLINDER CJ-5,6,7,8, SCRAMBLER	Fig. 25-800
EMISSION CONTROL SWITCHES CJ-5,6,7,8, SCRAMBLER	Fig. 25-900
EMISSION CONTROLS 1981 EIGHT CYLINDER CJ-5,6,7,8, SCRAMBLER	Fig. 25-1000
EMISSION CONTROLS FOUR CYLINDER, DIESEL XJ CHEROKEE, XJ WAGONEER, COMANCHE	Fig. 25-1100
EMISSION CONTROLS 1984-85 FOUR CYLINDER, GAS XJ CHEROKEE, XJ WAGONEER	Fig. 25-1200
EMISSION CONTROLS 1986 FOUR CYLINDER, GAS, INJECTED XJ CHEROKEE, XJ WAGONEER, COMANCHE	Fig. 25-1300
EMISSION CONTROLS 1984 SIX CYLINDER (V6) XJ CHEROKEE, XJ WAGONEER	Fig. 25-1400
EMISSION CONTROLS 1985-86 SIX CYLINDER (V6) XJ CHEROKEE, XJ WAGONEER, COMANCHE	Fig. 25-1500
EMISSION CONTROL VACUUM HARNESS SIX CYLINDER SJ CHEROKEE, SJ WAGONEER, J10, J20	Fig. 25-1600
EMISSION CONTROL COMPONENTS SIX CYLINDER SJ CHEROKEE, SJ WAGONEER, J10, J20	Fig. 25-1700
EMISSION CONTROL VACUUM HARNESS EIGHT CYLINDER SJ CHEROKEE, SJ WAGONEER, J10, J20	Fig. 25-1800
EMISSION CONTROL COMPONENTS EIGHT CYLINDER SJ CHEROKEE, SJ WAGONEER, J10, J20	Fig. 25-1900
EMISSION CONTROL COMPONENTS, CANADA, NRM, ECE, ADREIGHT CYLINDER SJ CHEROKEE, SJ WAGONEER, J10, J20	Fig. 25-2000
VAPOR CANISTERS	
VAPOR CANISTER CJ-5,6,7,8, SCRAMBLER	Fig. 25-2100
VAPOR CANISTER XJ CHEROKEE, XJ WAGONEER, COMANCHE	Fig. 25-2200
VAPOR CANISTER SJ CHEROKEE, SJ WAGONEER, J10, J20	Fig. 25-2300
PCV SYSTEMS	
PCV SYSTEM SIX CYLINDER CJ-5,6,7,8, SCRAMBLER	Fig. 25-2400
PCV SYSTEM, 1984-85 FOUR CYLINDER, GAS XJ CHEROKEE, XJ WAGONEER	Fig. 25-2500
PCV SYSTEM, 1986 FOUR CYLINDER, GAS, CARBURETED XJ CHEROKEE, XJ WAGONEER, COMANCHE	Fig. 25-2600

ILLUSTRATION TITLE **GROUP-FIG. NO.**

PCV SYSTEMS (Continued)

PCV SYSTEM, 1986 FOUR CYLINDER, GAS, CARBURETED XJ CHEROKEE, XJ WAGONEER, COMANCHE . . . . . Fig. 25-2600
PCV SYSTEM SIX CYLINDER SJ CHEROKEE, SJ WAGONEER, J10, J20 . . . . . Fig. 25-2700
PCV SYSTEM EIGHT CYLINDER SJ CHEROKEE, SJ WAGONEER, J10, J20 . . . . . Fig. 25-2800

PULSE AIR SYSTEM 1983-86 SIX CYLINDER CJ-5,7,8, SCRAMBLER, SJ WAGONS, J10
Figure 25-100

81J25 100

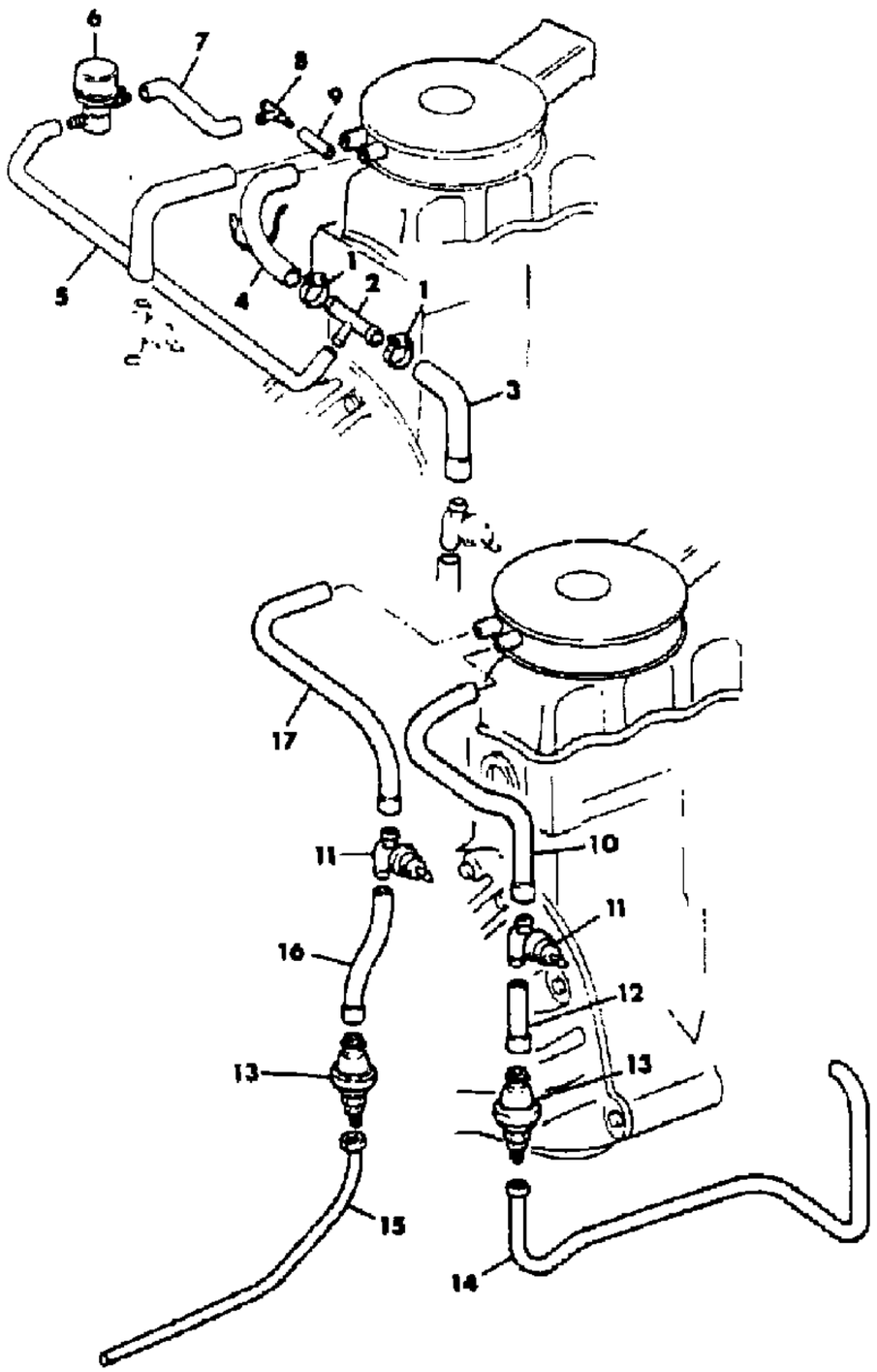

ITEM	PART NUMBER	QTY	BODY	MODEL	DESCRIPTION
1					CLAMP, Pulse Air Hose
	3300 0784	AR			0.688" To 0.969" I.D.
	J320 3077	AR			0.813" To 1.750" I.D.
	J400 6819	AR			1.141" To 1.984" I.D.
2					TEE
	3300 0440	1			1983-84: US-California
	3300 0440	1			1985-86
	3300 0440	1	CJ		1983-85: Japan
3					HOSE, Pulse Air, Upstream
	5300 0972	1	CJ		Without Power Brakes
4					HOSE, Pulse Air, Upstream
	5300 0973	1	SJ		1983-86: US-California
	5300 0973	1	CJ		1983-84: US-California, without Power Brakes
	5300 0973	1	CJ		1985-86: Without Power Brakes
	5300 0974	1	CJ		1983-84: US-California, with Power Brakes
	5300 0974	1	CJ		With Power Brakes
	5300 0974	1	CJ		1983-85: Japan
5					HOSE, Decel Valve Inlet
	5300 0971	1			1983-84: US-California
	5300 0971	1			1985-86
	5300 0971	1	CJ		1983-84: Japan
6					VALVE, Decel
	J323 7284	1			1981-82: US-California
	J323 7284	1	CJ		1983-84: US-California
	J323 7284	1			1985-86
	J323 7284	1			1983-84: Japan
	J323 7284	1	CJ		1984-85: EXPORT, Australian Design Rules, Sweden, Switzerland
	3300 1010	1	SJ		1983
	J323 7284	1	J10		1984-86: US-California
7					HOSE, Decel Valve To Tee
	5300 1137	1	CJ		1983-84: US-California, without Power Brakes
	5300 1137	1	CJ		1985-86: Without Power Brakes
	5300 1136	1	CJ		1983-84: US-California, with Power Brakes
	5300 1136	1	CJ		1985-86: With Power Brakes
	5300 1136	1	CJ		1983-85: Japan
	5300 1137	1	SJ		1983-86: US-California
8					CONNECTOR, Tee
	3420 1741	1			.375x.250x.375

MODEL CODES

16=Cherokee 2 Dr.(1981-83)
17=Cherokee 2 Dr.(1981-83)
73=Cherokee 2WD-2 Dr.(1984-86)
74=Cherokee 2WD-4 Dr.(1984-86)
18=Cherokee 4 Dr.(1981-83)
77=Cherokee 4WD-2 Dr.(1984-86)
78=Cherokee 4WD-4 Dr.(1984-86)
85=CJ-5 (1981-83)
86=CJ-6(1981)
87=CJ-7(1981-86)
88=CJ-8, Scrambler(1981-86)
64=Comanche 2WD-6 Ft. Box(1986)
66=Comanche 2WD-7 Ft. Box(1986)
63=Comanche 4WD-6 Ft. Box(1986)
65=Comanche 4WD-7 Ft. Box(1986)
15=Grand Wagoneer 4 Dr.(1984-86)
25=J-10 Truck 7 Ft. Box(1981-84)
26=J10 Truck 8 Ft. Box(1981-86)
27=J-20 Truck 8 Ft. Box(1981-86)
15=Wagoneer 4 Dr.(1981-83)
75=Wagoneer 4WD-4 Dr.(1984-86)

BODY
CJ=CJ-5, CJ-6, CJ-7, CJ-8, Scrambler(1981-86)
MJ=Comanche Pickup(1986)

STYLES
SJ=Wagoneer(1981-83), Grand Wagoneer(1984-86), Cherokee(1981-83), J-10, J-20(1981-86)
XJ=Wagoneer(1984-86), Cherokee(1984-86)

AR = Use as Required - = Non Illustrated Part P.A.R. = Paint as Required

PULSE AIR SYSTEM 1983-86 SIX CYLINDER CJ-5,7,8, SCRAMBLER, SJ WAGONS, J10
Figure 25-100

81J25 100

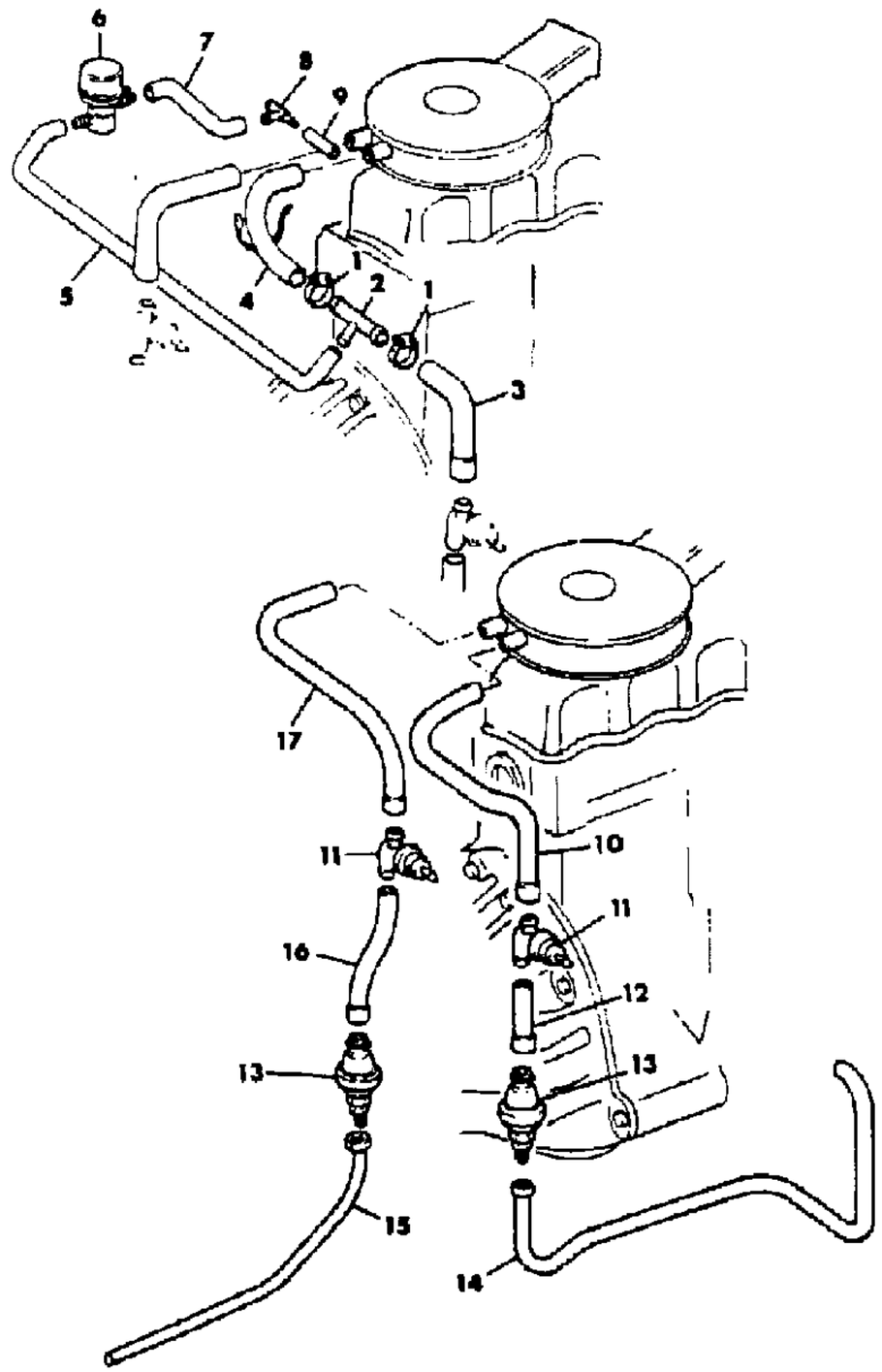

ITEM	PART NUMBER	QTY	BODY	MODEL	DESCRIPTION
	J323 2983	1			.375x.375x.375
9					HOSE, Vacuum
	J322 8056	1			With Flared End, .219 I.D.x.395 O.D., 8" Long
	J322 5622	AR			With Flared End, .219 I.D.x.395 O.D., 13" Long
	J812 5995	AR			.156 I.D.x.344 O.D., Orange
	J812 5812	AR			.156 I.D.x.344 O.D., Black
10					HOSE, Air Cleaner To Air Control Valve, Upstream
					With Automatic Transmission
	3300 0898	1	CJ		1983-86: Without Power Brakes
	5300 0902	1	CJ		1983-86: With Power Brakes
	5300 0902	1	CJ		1983-85: Japan
	3300 0898	1	SJ		1983-86
11	3300 0355	2			VALVE, Pulse Air Control
12					HOSE, Air Control Valve To Pulse Air Injection Check Valve, Upstream
	3300 0370	1	CJ		1983
	3300 2132	1	CJ		1984-86
	J536 4363	1	SJ		1983-86
13	3300 0354	2			VALVE, Pulse Air Injection Check
14					TUBE ASSEMBLY, Check Valve To Front Pipe, Upstream ***
	J536 4322	1	CJ		1983-86: US-50 States, without CANADA
	J536 4322	1		87	1983-85: Japan
	J536 4323	1	SJ		1983-86: US-50 States, without CANADA
15					TUBE ASSEMBLY, Check Valve To Converter, Downstream ***
	J536 4325	1		85	1983: US-50 States, without CANADA
	J536 4326	1		87	1983-85: Japan
	J536 4326	1		87-88	1983-86: US-50 States, without CANADA
	J536 4328	1	SJ		
16					HOSE, Air Control Valve To Pulse Air Injection Check Valve, Downstream
	5300 0904	1	CJ		1983-86
	J536 4364	1	SJ		1983-86
17					HOSE, Air Cleaner To Air Control Valve, Downstream
					With Automatic Transmission
	3300 0900	1	CJ		1983-86: Without Power Brakes
	5300 0903	1	CJ		1983-86: With Power Brakes
	5300 0903	1	CJ		1983-85: Japan
	3300 0899	1	SJ		1983-86

MODEL CODES

16=Cherokee 2 Dr.(1981-83)	78=Cherokee 4WD-4 Dr.(1984-86)	64=Comanche 2WD-6 Ft. Box(1986)	25=J-10 Truck 7 Ft. Box(1981-84)
17=Cherokee 2 Dr.(1981-83)	85=CJ-5 (1981-83)	66=Comanche 2WD-7 Ft. Box(1986)	26=J10 Truck 8 Ft. Box(1981-86)
73=Cherokee 2WD-2 Dr.(1984-86)	86=CJ-6(1981)	63=Comanche 4WD-6 Ft. Box(1986)	27=J-20 Truck 8 Ft. Box(1981-86)
74=Cherokee 2WD-4 Dr.(1984-86)	87=CJ-7(1981-86)	65=Comanche 4WD-7 Ft. Box(1986)	15=Wagoneer 4 Dr.(1981-83)
18=Cherokee 4 Dr.(1981-83)	88=CJ-8, Scrambler(1981-86)	15=Grand Wagoneer 4 Dr.(1984-86)	75=Wagoneer 4WD-4 Dr.(1984-86)
77=Cherokee 4WD-2 Dr.(1984-86)			

BODY
CJ=CJ-5, CJ-6, CJ-7, CJ-8, Scrambler(1981-86)
MJ=Comanche Pickup(1986)

STYLES
SJ=Wagoneer(1981-83), Grand Wagoneer(1984-86), Cherokee(1981-83), J-10, J-20(1981-86)
XJ=Wagoneer(1984-86), Cherokee(1984-86)

AR = Use as Required - = Non Illustrated Part P.A.R. = Paint as Required

« RETURN TO GROUP INDEX

AIR INJECTION SYSTEM 1984-85 FOUR CYLINDER, GAS XJ CHEROKEE, XJ WAGONEER
Figure 25-200

81J25 200

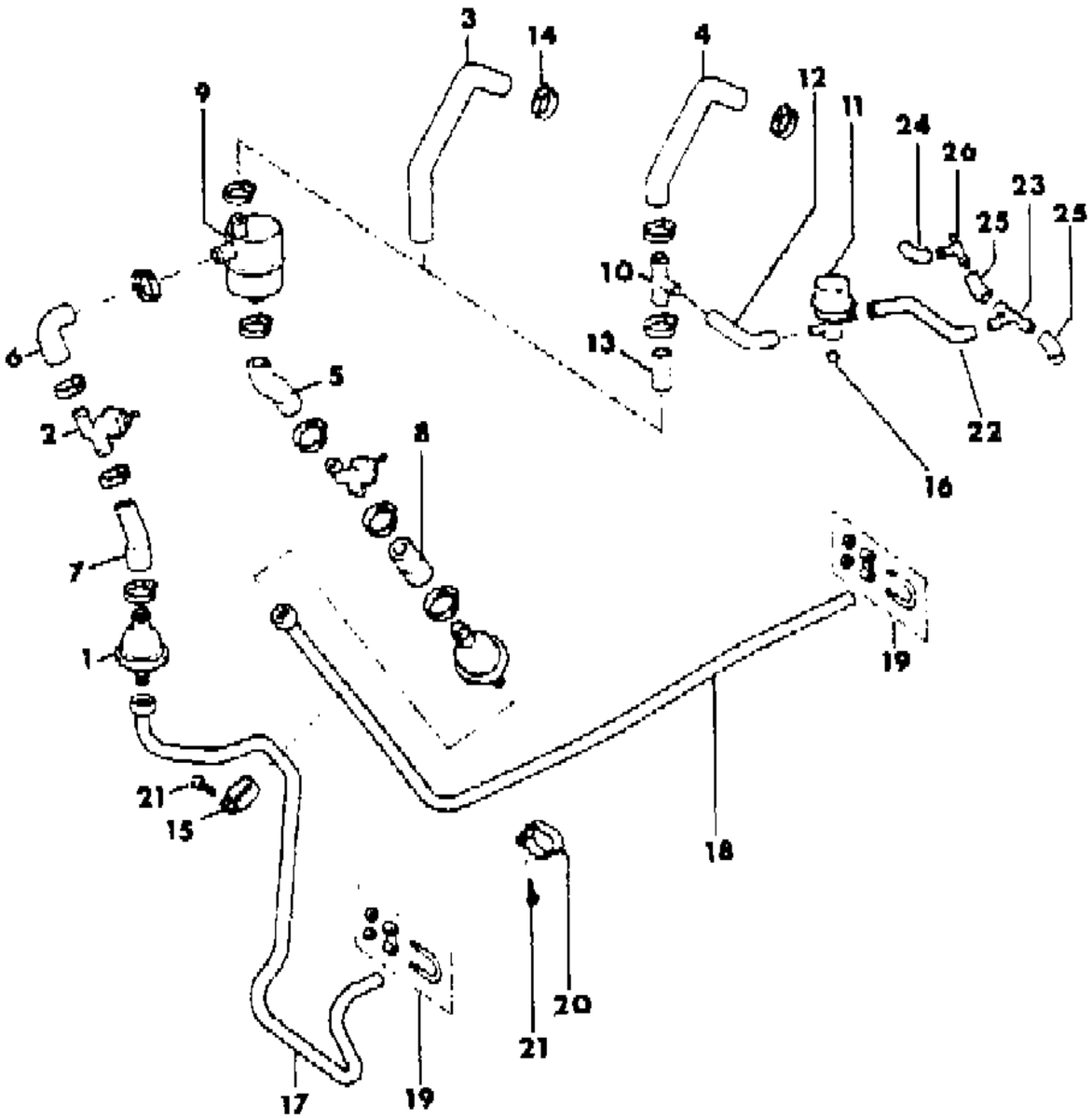

ITEM	PART NUMBER	QTY	BODY	MODEL	DESCRIPTION
1	3300 0354	2			VALVE, Check
2	3300 0355	2			VALVE, Air
3					HOSE, Pulse Air
	3300 1952	1			US-California, without Manual Transmission
4					HOSE, Pulse Air
	3300 2164	1			US-California, with Manual Transmission
5	3300 1954	1			HOSE, Pulse Air
6	3300 1953	1			HOSE, Pulse Air
7	3300 1716	1			HOSE, Pulse Air
8	5300 3344	1			HOSE, Pulse Air
9	3300 1955	1			SILENCER, Pulse Air
10					TEE
	3300 0440	1			US-California, with Manual Transmission
11					VALVE, Decel
	3300 1010	1			US-California, with Manual Transmission
12					HOSE
	3300 2166	1			US-California, with Manual Transmission
13					HOSE, Pulse Air, Bulk
	J448 6763	1			US-California, with Manual Transmission
14	J320 3077	10			CLAMP
15	3300 1060	1			CLAMP
16					BUMPER, Decel Valve
	J576 4232	1			US-California, with Manual Transmission
17	5300 0498	1			TUBE, Pulse Air, Upstream
18	5300 0608	1			TUBE, Pulse Air, Downstream
19	3300 0871	2			CLAMP
20	3300 0869	1			CLAMP
21	J400 4692	2			SCREW
22					HOSE
	3300 2167	1			US-California, with Manual Transmission
23					TEE
	J323 2983	1			US-California, with Manual Transmission
24					HOSE
	3300 2051	1			US-California, with Manual Transmission
25					HOSE
	3300 1638	2			US-California, with Manual Transmission
26					TEE
	3420 1741	1			US-California, with Manual Transmission

MODEL CODES

16=Cherokee 2 Dr.(1981-83)
17=Cherokee 2 Dr.(1981-83)
73=Cherokee 2WD-2 Dr.(1984-86)
74=Cherokee 2WD-4 Dr.(1984-86)
18=Cherokee 4 Dr.(1981-83)
77=Cherokee 4WD-2 Dr.(1984-86)
78=Cherokee 4WD-4 Dr.(1984-86)
85=CJ-5 (1981-83)
86=CJ-6(1981)
87=CJ-7(1981-86)
88=CJ-8, Scrambler(1981-86)
64=Comanche 2WD-6 Ft. Box(1986)
66=Comanche 2WD-7 Ft. Box(1986)
63=Comanche 4WD-6 Ft. Box(1986)
65=Comanche 4WD-7 Ft. Box(1986)
15=Grand Wagoneer 4 Dr.(1984-86)
25=J-10 Truck 7 Ft. Box(1981-84)
26=J10 Truck 8 Ft. Box(1981-86)
27=J-20 Truck 8 Ft. Box(1981-86)
15=Wagoneer 4 Dr.(1981-83)
75=Wagoneer 4WD-4 Dr.(1984-86)

BODY
CJ=CJ-5, CJ-6, CJ-7, CJ-8, Scrambler(1981-86)
MJ=Comanche Pickup(1986)

STYLES
SJ=Wagoneer(1981-83), Grand Wagoneer(1984-86), Cherokee(1981-83), J-10, J-20(1981-86)
XJ=Wagoneer(1984-86), Cherokee(1984-86)

AR = Use as Required - = Non Illustrated Part P.A.R. = Paint as Required

« RETURN TO GROUP INDEX

AIR INJECTION SYSTEM SIX CYLINDER XJ CHEROKEE, XJ WAGONEER, COMANCHE
Figure 25-300

81J25 300

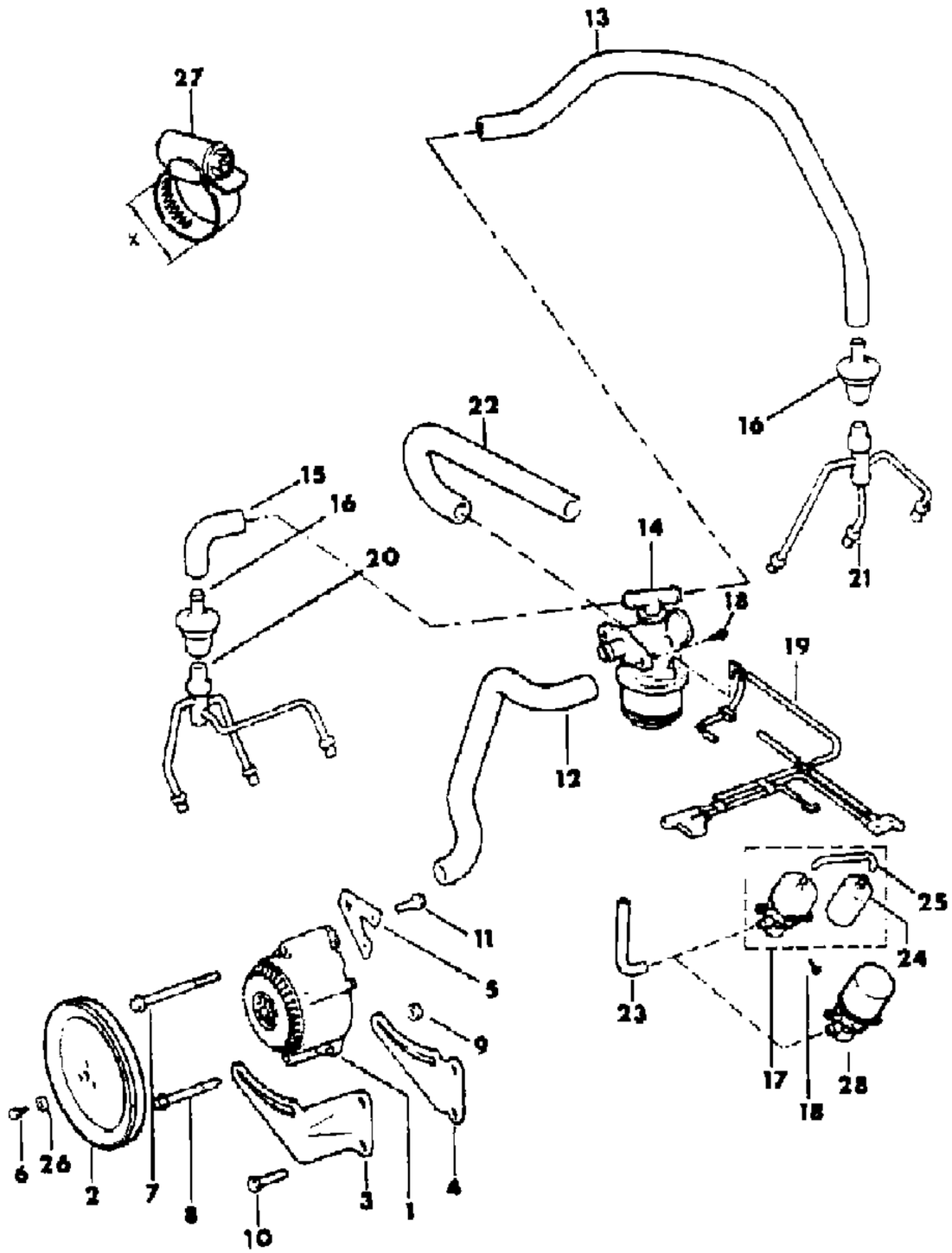

ITEM	PART NUMBER	QTY	BODY	MODEL	DESCRIPTION
1	5300 1371	1			PUMP, Air Injection
2	5300 0554	1			PULLEY, Air Pump
3	5300 0555	1			BRACKET
4	5300 0556	1			BRACKET
5	5300 0557	1			BRACKET
6	3420 2155	3			BOLT
7	S150 4921	1			BOLT
8	1150 5025	1			BOLT
9	J420 0081	1			NUT
10	3420 1322	2			BOLT
11	1150 4986	2			BOLT
12	5300 0694	1			HOSE
13					HOSE
	5300 0695	1			Without US-California
14					VALVE, Air
	3300 1322	1			US-California (w/Elec.Cunn.)
	5300 0956	1			Without US-California (w/Vacumn Conn.)
15	5300 0942	1			HOSE
16					VALVE, Check
	3300 1549	1			US-California
	5300 0944	1			US-49 States
17					VALVE, Decel
	3300 2179	1			US
	3300 1124	1			CANADA, Non-Regulated Markets
	3300 2179	1			Economic Commission of Europe, Sweden, Switzerland
18	3420 1366	4			SCREW
19					HARNESS ASSEMBLY, Vacuum ***
	5300 1783	1			1984-86: US-California
	3300 2147	1			1984: Without US-California
	5300 2693	1			1985-86: US-49 States, with Manual Transmission
	5300 2540	1			1985-86: US-49 States, with Automatic Transmission
	5300 2693	1			1985-86: With Manual Transmission, with High Altitude Operation
	5300 2540	1			1985-86: With Automatic Transmission, with High Altitude Operation
	5300 2693	1			1985-86: CANADA, Non-Regulated Markets
	3300 2147	1			1985-86: Economic Commission of Europe, Sweden, Switzerland
20	8350 0872	1			PIPE, Air Injection

MODEL CODES

16=Cherokee 2 Dr.(1981-83)	78=Cherokee 4WD-4 Dr.(1984-86)	64=Comanche 2WD-6 Ft. Box(1986)	25=J-10 Truck 7 Ft. Box(1981-84)
17=Cherokee 2 Dr.(1981-83)	85=CJ-5 (1981-83)	66=Comanche 2WD-7 Ft. Box(1986)	26=J10 Truck 8 Ft. Box(1981-86)
73=Cherokee 2WD-2 Dr.(1984-86)	86=CJ-6(1981)	63=Comanche 4WD-6 Ft. Box(1986)	27=J-20 Truck 8 Ft. Box(1981-86)
74=Cherokee 2WD-4 Dr.(1984-86)	87=CJ-7(1981-86)	65=Comanche 4WD-7 Ft. Box(1986)	15=Wagoneer 4 Dr.(1981-83)
18=Cherokee 4 Dr.(1981-83)	88=CJ-8, Scrambler(1981-86)	15=Grand Wagoneer 4 Dr.(1984-86)	75=Wagoneer 4WD-4 Dr.(1984-86)
77=Cherokee 4WD-2 Dr.(1984-86)			

BODY
CJ=CJ-5, CJ-6, CJ-7, CJ-8, Scrambler(1981-86)
MJ=Comanche Pickup(1986)

STYLES
SJ=Wagoneer(1981-83), Grand Wagoneer(1984-86), Cherokee(1981-83), J-10, J-20(1981-86)
XJ=Wagoneer(1984-86), Cherokee(1984-86)

AR = Use as Required - = Non Illustrated Part P.A.R. = Paint as Required

AIR INJECTION SYSTEM SIX CYLINDER XJ CHEROKEE, XJ WAGONEER, COMANCHE
Figure 25-300

81J25 300

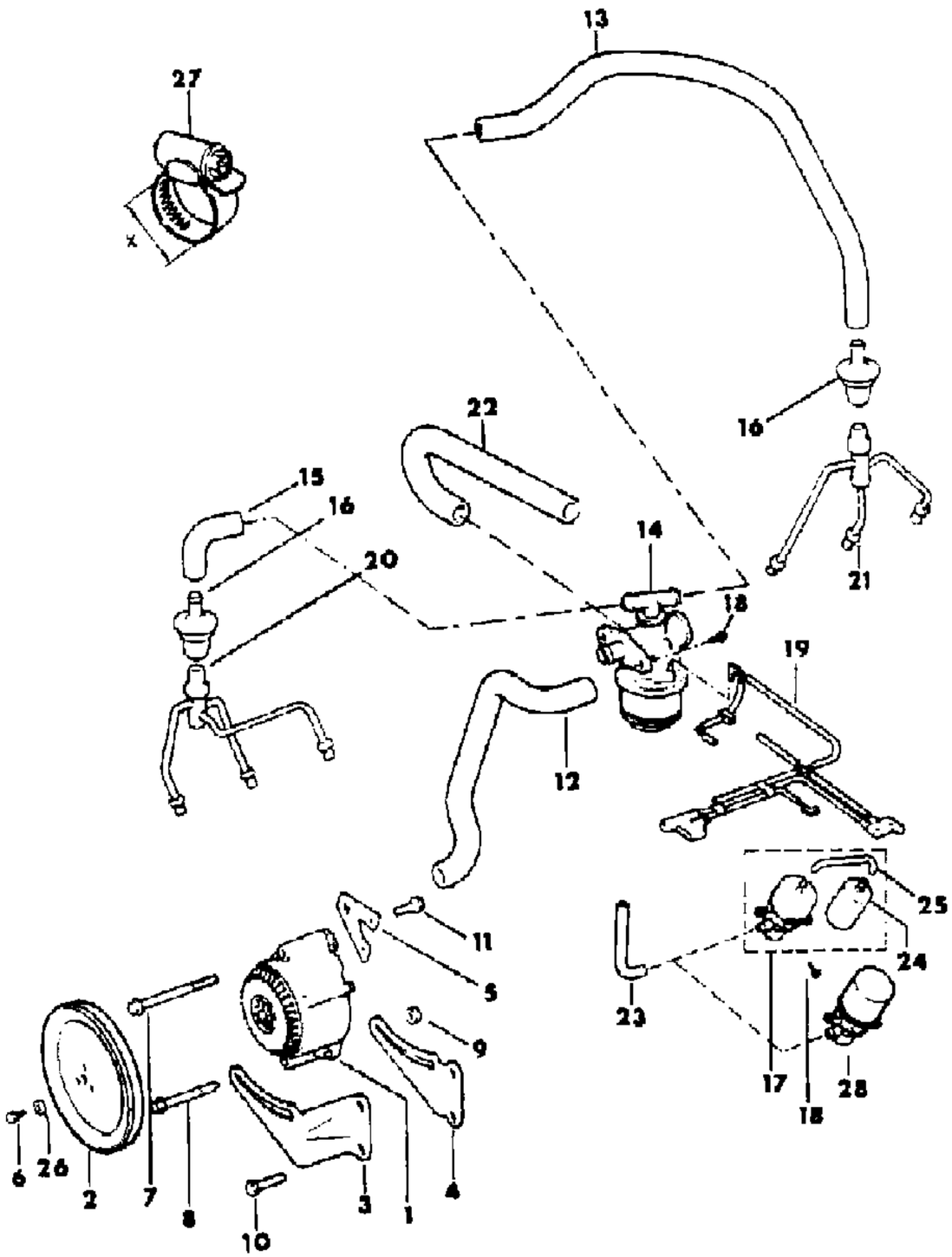

ITEM	PART NUMBER	QTY	BODY	MODEL	DESCRIPTION
21					PIPE, Air Injection
	8350 0871	1			Without US-California
22	5300 0696	1			HOSE
23					HOSE
	J323 0279	1			Modification Required
24					RESERVOIR, Vacuum
	8350 1391	1			US
25					HOSE, Bulk
	J812 5995	AR			US
26	3420 2156	3			SPACER
27					CLAMP, Hose
	J320 3078	3			x=1.31" Thru 2.25"
	J320 3076	5			x=0.56" Thru 1.06"
28					VALVE, Decel
	8350 2799	1			US
	8350 2799	1			Economic Commission of Europe, Sweden, Switzerland

MODEL CODES

16=Cherokee 2 Dr.(1981-83)
17=Cherokee 2 Dr.(1981-83)
73=Cherokee 2WD-2 Dr.(1984-86)
74=Cherokee 2WD-4 Dr.(1984-86)
18=Cherokee 4 Dr.(1981-83)
77=Cherokee 4WD-2 Dr.(1984-86)
78=Cherokee 4WD-4 Dr.(1984-86)
85=CJ-5 (1981-83)
86=CJ-6(1981)
87=CJ-7(1981-86)
88=CJ-8, Scrambler(1981-86)
64=Comanche 2WD-6 Ft. Box(1986)
66=Comanche 2WD-7 Ft. Box(1986)
63=Comanche 4WD-6 Ft. Box(1986)
65=Comanche 4WD-7 Ft. Box(1986)
15=Grand Wagoneer 4 Dr.(1984-86)
25=J-10 Truck 7 Ft. Box(1981-84)
26=J10 Truck 8 Ft. Box(1981-86)
27=J-20 Truck 8 Ft. Box(1981-86)
15=Wagoneer 4 Dr.(1981-83)
75=Wagoneer 4WD-4 Dr.(1984-86)

BODY
CJ=CJ-5, CJ-6, CJ-7, CJ-8, Scrambler(1981-86)
MJ=Comanche Pickup(1986)

STYLES
SJ=Wagoneer(1981-83), Grand Wagoneer(1984-86), Cherokee(1981-83), J-10, J-20(1981-86)
XJ=Wagoneer(1984-86), Cherokee(1984-86)

AR = Use as Required - = Non Illustrated Part P.A.R. = Paint as Required

AIR INJECTION SYSTEM SIX CYLINDER CJ-5,6,7,8, SCRAMBLER, SJ WAGONEER, J10, J20
Figure 25-350

ILLUSTRATION NOT AVAILABLE AT TIME OF PUBLICATION

ITEM	PART NUMBER	QTY	BODY	MODEL	DESCRIPTION
1					PIPE, Air Ijection
	J323 8936	1			With Straight Main Tube
	J324 0558	1			With Curved Main Tube
2	J322 9457	6			BOLT
3	J323 3960	1			VALVE, Exhaust Check
4					VALVE, Exhaust Diverter
	J322 3634	1	CJ		
	J323 0816	1	SJ		
	J323 0816	1	SJ		1981-82; EXPORT w/Automatic Transmission
	J322 3634	1	SJ		1981-82, EXPORT w/Manual Transmission
	J322 3634	1	SJ		1983-86; EXPORT
5					PUMP, Air Injection
	J813 4211	1			w/Power Steering
	J324 1089	1			w/o Power Steering
6					CLAMP
	J400 6818	AR			1.078" Diameter
	J400 6819	AR			1.140" Diameter
	J400 6820	AR			1.281" Diameter
7					HOSE, Diverter Valve to Check Valve
	J323 8962	1			w/Straight Air Pipe
	J324 1336	1			w/Curved Air Pipe
8					HOSE, Air Pump to Diverter Valve
					w/Power Steering
	J323 9576	1			
	J323 8961	1			California
	J323 8961	1			1981-82; EXPORT
	J323 9576	1			1983; EXPORT
	J323 9576	1			1984-86; EXPORT, Economic Commission of Europe
	J323 8961	1			1984-86; EXPORT, Australian Design Rule
					w/o Power Steering
	J323 9613	1			Outlet on Air Pump is a Straight Fitting
	J324 1178	1	SJ		Outlet on Air Pump is an Elbow
	J324 1177	1	CJ		Outlet on Air Pump is an Elbow
	J323 9614	1	CJ		California
	J324 1177	1			1981-82; EXPORT, w/Manual Transmission, Economic Commission of Europe
	J324 1178	1			1981-82; EXPORT, w/Automatic Transmission, Economic Commission of Europe
	J324 1177	1			1981-82; EXPORT, Australian Design Rule

MODEL CODES

16=Cherokee 2 Dr.(1981-83)	78=Cherokee 4WD-4 Dr.(1984-86)	64=Comanche 2WD-6 Ft. Box(1986)	25=J-10 Truck 7 Ft. Box(1981-84)
17=Cherokee 2 Dr.(1981-83)	85=CJ-5 (1981-83)	66=Comanche 2WD-7 Ft. Box(1986)	26=J10 Truck 8 Ft. Box(1981-86)
73=Cherokee 2WD-2 Dr.(1984-86)	86=CJ-6(1981)	63=Comanche 4WD-6 Ft. Box(1986)	27=J-20 Truck 8 Ft. Box(1981-86)
74=Cherokee 2WD-4 Dr.(1984-86)	87=CJ-7(1981-86)	65=Comanche 4WD-7 Ft. Box(1986)	15=Wagoneer 4 Dr.(1981-83)
18=Cherokee 4 Dr.(1981-83)	88=CJ-8, Scrambler(1981-86)	15=Grand Wagoneer 4 Dr.(1984-86)	75=Wagoneer 4WD-4 Dr.(1984-86)
77=Cherokee 4WD-2 Dr.(1984-86)			

BODY
CJ=CJ-5, CJ-6, CJ-7, CJ-8, Scrambler(1981-86)
MJ=Comanche Pickup(1986)

STYLES
SJ=Wagoneer(1981-83), Grand Wagoneer(1984-86), Cherokee(1981-83), J-10, J-20(1981-86)
XJ=Wagoneer(1984-86), Cherokee(1984-86)

AR = Use as Required - = Non Illustrated Part P.A.R. = Paint as Required

ILLUSTRATION NOT AVAILABLE AT TIME OF PUBLICATION

ITEM	PART NUMBER	QTY	BODY	MODEL	DESCRIPTION
	J324 1177	1			1983-86; EXPORT
9	J812 5812	AR			HOSE, Vacuum

MODEL CODES
16=Cherokee 2 Dr.(1981-83)
17=Cherokee 2 Dr.(1981-83)
73=Cherokee 2WD-2 Dr.(1984-86)
74=Cherokee 2WD-4 Dr.(1984-86)
18=Cherokee 4 Dr.(1981-83)
77=Cherokee 4WD-2 Dr.(1984-86)
78=Cherokee 4WD-4 Dr.(1984-86)
85=CJ-5 (1981-83)
86=CJ-6(1981)
87=CJ-7(1981-86)
88=CJ-8, Scrambler(1981-86)
64=Comanche 2WD-6 Ft. Box(1986)
66=Comanche 2WD-7 Ft. Box(1986)
63=Comanche 4WD-6 Ft. Box(1986)
65=Comanche 4WD-7 Ft. Box(1986)
15=Grand Wagoneer 4 Dr.(1984-86)
25=J-10 Truck 7 Ft. Box(1981-84)
26=J10 Truck 8 Ft. Box(1981-86)
27=J-20 Truck 8 Ft. Box(1981-86)
15=Wagoneer 4 Dr.(1981-83)
75=Wagoneer 4WD-4 Dr.(1984-86)

BODY
CJ=CJ-5, CJ-6, CJ-7, CJ-8, Scrambler(1981-86)
MJ=Comanche Pickup(1986)

STYLES
SJ=Wagoneer(1981-83), Grand Wagoneer(1984-86), Cherokee(1981-83), J-10, J-20(1981-86)
XJ=Wagoneer(1984-86), Cherokee(1984-86)

AR = Use as Required - = Non Illustrated Part P.A.R. = Paint as Required

AIR INJECTION SYSTEM EIGHT CYLINDER SJ WAGONEER, J10, J20
Figure 25-400

81J25 400

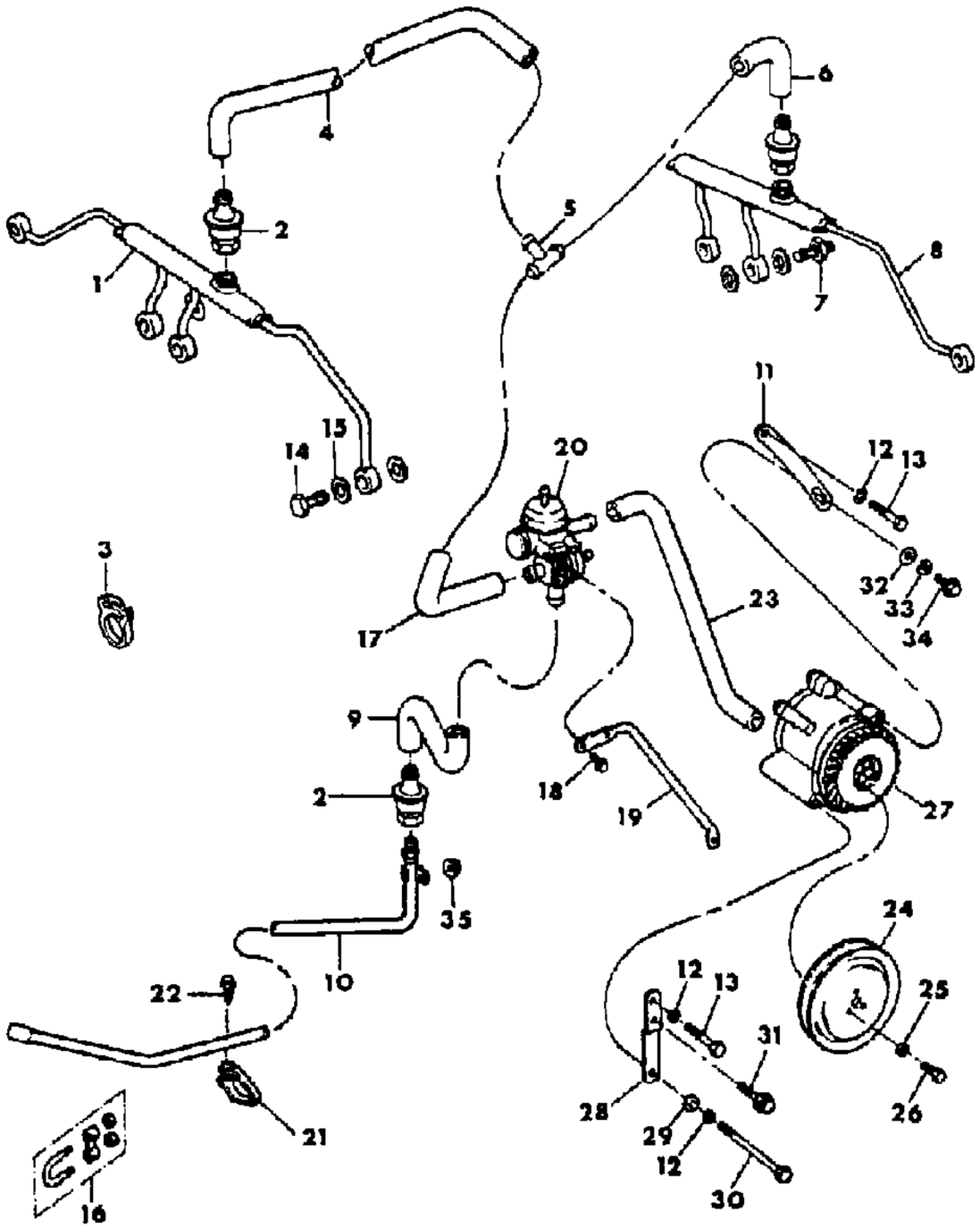

ITEM	PART NUMBER	QTY	BODY	MODEL	DESCRIPTION
1	J323 4692	1			MANIFOLD, Air Injection, Right ***
2	J323 3960	3			VALVE, Check
3	J400 6819	10			CLAMP, Hose
4	5300 2376	1			HOSE, Upstream
5	3300 1752	1			CONNECTOR, Tee
6	5300 2375	1			HOSE, Upstream
7	J400 7222	1			BOLT
8	J323 4691	1			MANIFOLD, Air Injection, Left ***
9	5300 2378	1			HOSE, Downstream
10	J536 4861	1			TUBE, Downstream
11	J322 9874	1			BRACKET, Adjusting
12	J400 3803	3			WASHER, Lock
13	J018 0137	2			BOLT
14	J322 9425	6			BOLT
15	J004 4042	14			GASKET
16	J323 7055	1			CLAMP ASSEMBLY ***
17	5300 2377	1			HOSE, Outlet
18	J400 7326	2			SCREW
19	5300 2379	1			BRACKET, Mounting
20					VALVE, Control
	3300 1682	1			1984-85
	5300 2380	1			1986
21	J536 4880	2			CLAMP
22	J400 4692	2			SCREW
23					HOSE, Inlet
	3300 1686	1			1984-85
	5300 2382	1			1986
24	J535 5780	1			PULLEY, Air Pump
25	S150 3963	3			WASHER, Lock
26	1150 3877	3			BOLT
27	J813 4211	1			PUMP, Air Injection
28	J322 7683	1			BRACKET, Mounting
29	J400 1104	1			WASHER
30	J045 0517	1			BOLT, Pivot
31	J027 4195	1			SCREW
32	1150 0273	1			WASHER
33	1150 0207	1			WASHER, Lock
34	1150 0829	1			BOLT
35	J400 4008	1			NUT

MODEL CODES
16=Cherokee 2 Dr.(1981-83)
17=Cherokee 2 Dr.(1981-83)
73=Cherokee 2WD-2 Dr.(1984-86)
74=Cherokee 2WD-4 Dr.(1984-86)
18=Cherokee 4 Dr.(1981-83)
77=Cherokee 4WD-2 Dr.(1984-86)
78=Cherokee 4WD-4 Dr.(1984-86)
85=CJ-5 (1981-83)
86=CJ-6(1981)
87=CJ-7(1981-86)
88=CJ-8, Scrambler(1981-86)
64=Comanche 2WD-6 Ft. Box(1986)
66=Comanche 2WD-7 Ft. Box(1986)
63=Comanche 4WD-6 Ft. Box(1986)
65=Comanche 4WD-7 Ft. Box(1986)
15=Grand Wagoneer 4 Dr.(1984-86)
25=J-10 Truck 7 Ft. Box(1981-84)
26=J10 Truck 8 Ft. Box(1981-86)
27=J-20 Truck 8 Ft. Box(1981-86)
15=Wagoneer 4 Dr.(1981-83)
75=Wagoneer 4WD-4 Dr.(1984-86)

BODY
CJ=CJ-5, CJ-6, CJ-7, CJ-8, Scrambler(1981-86)
MJ=Comanche Pickup(1986)

STYLES
SJ=Wagoneer(1981-83), Grand Wagoneer(1984-86), Cherokee(1981-83), J-10, J-20(1981-86)
XJ=Wagoneer(1984-86), Cherokee(1984-86)

AR = Use as Required - = Non Illustrated Part P.A.R. = Paint as Required

« RETURN TO GROUP INDEX

Figure 25-500

81J25 500

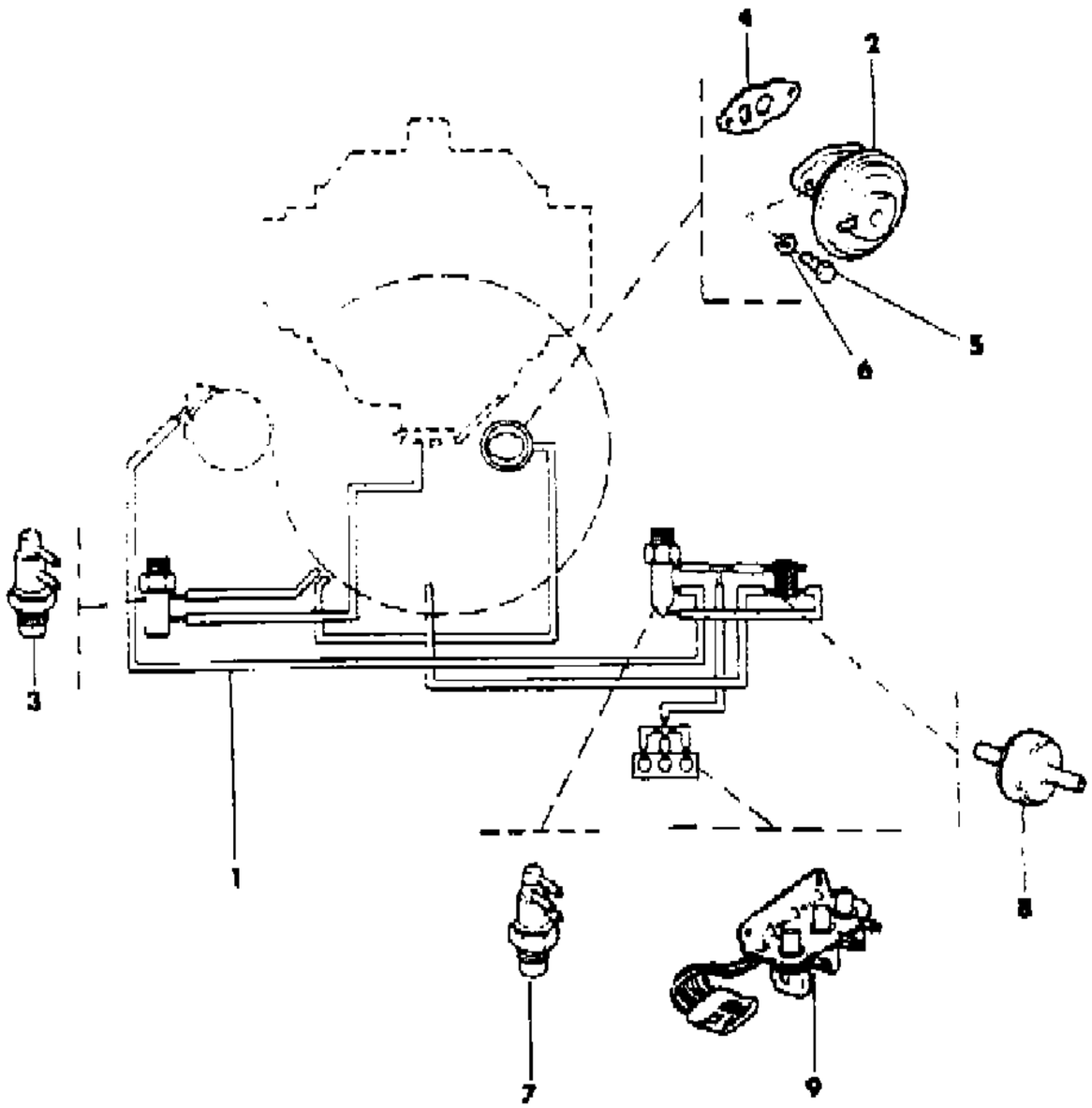

ITEM	PART NUMBER	QTY	BODY	MODEL	DESCRIPTION
1					HARNESS, Vacuum
	J324 2018	1			US-49 States
	J324 1721	1			US-California
2					VALVE, EGR
	J324 0193	1			1981-83: US-49 States, with Manual Transmission
	J324 0379	1			1981: US-49 States, with Automatic Transmission
	J323 7108	1			1981: US-California, with Manual Transmission
	J323 7107	1			1981: US-California, with Automatic Transmission
	J323 7107	1			1982: US-California, with Manual Transmission
	J323 7108	1			1983: US-California, with Manual Transmission
	J323 7106	1			1982: EXPORT, Australian Design Rules, Sweden
	J324 2039	1			1983: EXPORT, Australian Design Rules, Sweden
3					SWITCH, EGR CTO
	J813 2343	1			1981
	J324 2124	1			1982
	J324 2124	1			1983: Without US-California
	J324 2125	1			1983: US-California
4	J813 2352	1			GASKET, EGR
5	1150 0817	2			BOLT
6	J012 0214	2			WASHER, Lock
7					SWITCH, CTO
	J813 2587	1			1981
	J813 4338	1			1982-83
8	J323 7293	1			VALVE, Delay
9					VALVE, Solenoid
	J323 7189	1			1981: US-California, with Manual Transmission
	J323 6838	1			1981: US-California, with Automatic Transmission
	J324 1698	1			1982: US-California
	J324 0803	1			1983: US-California

MODEL CODES

16=Cherokee 2 Dr.(1981-83)	78=Cherokee 4WD-4 Dr.(1984-86)	64=Comanche 2WD-6 Ft. Box(1986)	25=J-10 Truck 7 Ft. Box(1981-84)
17=Cherokee 2 Dr.(1981-83)	85=CJ-5 (1981-83)	66=Comanche 2WD-7 Ft. Box(1986)	26=J10 Truck 8 Ft. Box(1981-86)
73=Cherokee 2WD-2 Dr.(1984-86)	86=CJ-6(1981)	63=Comanche 4WD-6 Ft. Box(1986)	27=J-20 Truck 8 Ft. Box(1981-86)
74=Cherokee 2WD-4 Dr.(1984-86)	87=CJ-7(1981-86)	65=Comanche 4WD-7 Ft. Box(1986)	15=Wagoneer 4 Dr.(1981-83)
18=Cherokee 4 Dr.(1981-83)	88=CJ-8, Scrambler(1981-86)	15=Grand Wagoneer 4 Dr.(1984-86)	75=Wagoneer 4WD-4 Dr.(1984-86)
77=Cherokee 4WD-2 Dr.(1984-86)			

BODY
CJ=CJ-5, CJ-6, CJ-7, CJ-8, Scrambler(1981-86)
MJ=Comanche Pickup(1986)

STYLES
SJ=Wagoneer(1981-83), Grand Wagoneer(1984-86), Cherokee(1981-83), J-10, J-20(1981-86)
XJ=Wagoneer(1984-86), Cherokee(1984-86)

AR = Use as Required - = Non Illustrated Part P.A.R. = Paint as Required

« RETURN TO GROUP INDEX

EMISSION CONTROLS 1983-86 AMC FOUR CYLINDER CJ-5,7, SCRAMBLER
Figure 25-600

81J25 600

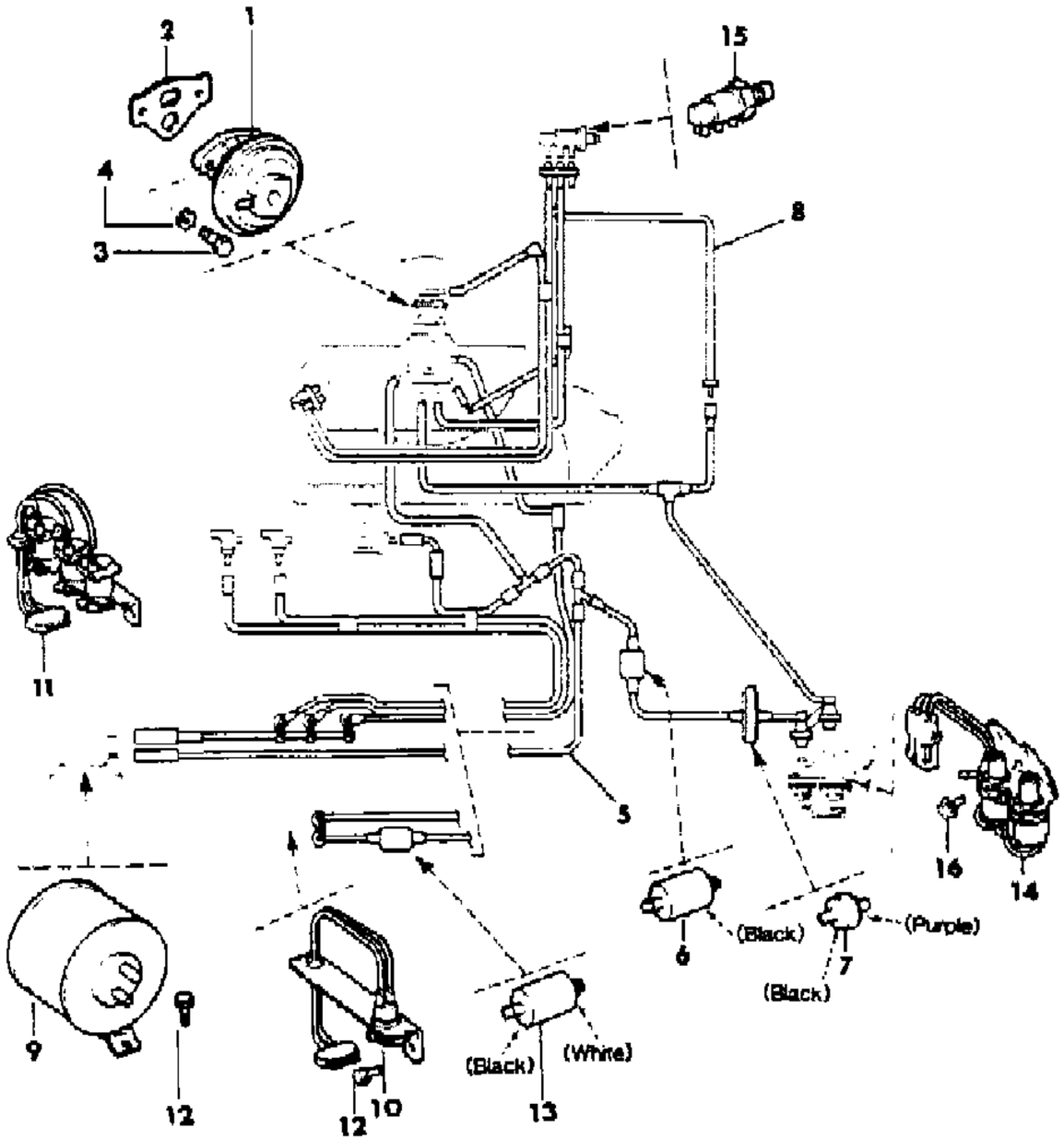

ITEM	PART NUMBER	QTY	BODY	MODEL	DESCRIPTION
1					VALVE, EGR
	5300 1090	1			1983-86: US-49 States
	5300 1089	1			1983-86: CANADA
	3300 1943	1			1984-86: US-California, with Manual Transmission
	5300 1089	1			1984-86: High Altitude Operation
2	J322 1283	1			GASKET
3	J018 0078	2			BOLT
4	J012 0214	2			WASHER, Lock
5					HARNESS, Vacuum
	3300 1240	1			1983-84: US-49 States
	3300 2070	1			1984: US-California, with Manual Transmission
	5300 2724	1			1985-86: US, with Manual Transmission
	5300 2722	1			1985-86: High Altitude Operation
	3300 1676	1			1984: CANADA
	3300 2723	1			1985-86: CANADA
	3300 2071	1			1984: EXPORT, Australian Design Rules
	3300 2072	1			1984-85: EXPORT, Non-Regulated Markets
6	J323 9467	1			RESERVOIR, Vacuum
7	J323 6284	2			VALVE, Delay
8					HARNESS, Vacuum
	3300 1241	1			US-49 States
	3300 1241	1			US-California, with Manual Transmission
	3300 2073	1			EXPORT, Non-Regulated Markets
9	5300 1068	1			RESERVOIR, Vacuum
10					VALVE, Solenoid
	3300 1996	1			1984-86: CANADA, EXPORT
11					VALVE, Solenoid
	3300 1995	1			1983-85: US
12	1150 2453	4			SCREW
13					RESERVOIR, Vacuum
	J323 9603	1			CANADA
14	J324 0803	1			SWITCH, Emission
15	J323 8932	1			SWITCH, Vacuum
16	1150 4988	2			BOLT

MODEL CODES
16=Cherokee 2 Dr.(1981-83)
17=Cherokee 2 Dr.(1981-83)
73=Cherokee 2WD-2 Dr.(1984-86)
74=Cherokee 2WD-4 Dr.(1984-86)
18=Cherokee 4 Dr.(1981-83)
77=Cherokee 4WD-2 Dr.(1984-86)
78=Cherokee 4WD-4 Dr.(1984-86)
85=CJ-5 (1981-83)
86=CJ-6(1981)
87=CJ-7(1981-86)
88=CJ-8, Scrambler(1981-86)
64=Comanche 2WD-6 Ft. Box(1986)
66=Comanche 2WD-7 Ft. Box(1986)
63=Comanche 4WD-6 Ft. Box(1986)
65=Comanche 4WD-7 Ft. Box(1986)
15=Grand Wagoneer 4 Dr.(1984-86)
25=J-10 Truck 7 Ft. Box(1981-84)
26=J10 Truck 8 Ft. Box(1981-86)
27=J-20 Truck 8 Ft. Box(1981-86)
15=Wagoneer 4 Dr.(1981-83)
75=Wagoneer 4WD-4 Dr.(1984-86)

BODY
CJ=CJ-5, CJ-6, CJ-7, CJ-8, Scrambler(1981-86)
MJ=Comanche Pickup(1986)

STYLES
SJ=Wagoneer(1981-83), Grand Wagoneer(1984-86), Cherokee(1981-83), J-10, J-20(1981-86)
XJ=Wagoneer(1984-86), Cherokee(1984-86)

AR = Use as Required - = Non Illustrated Part P.A.R. = Paint as Required

« RETURN TO GROUP INDEX

EMISSION CONTROL VACUUM HARNESS SIX CYLINDER CJ-5,6,7,8, SCRAMBLER
Figure 25-700

81J25 700

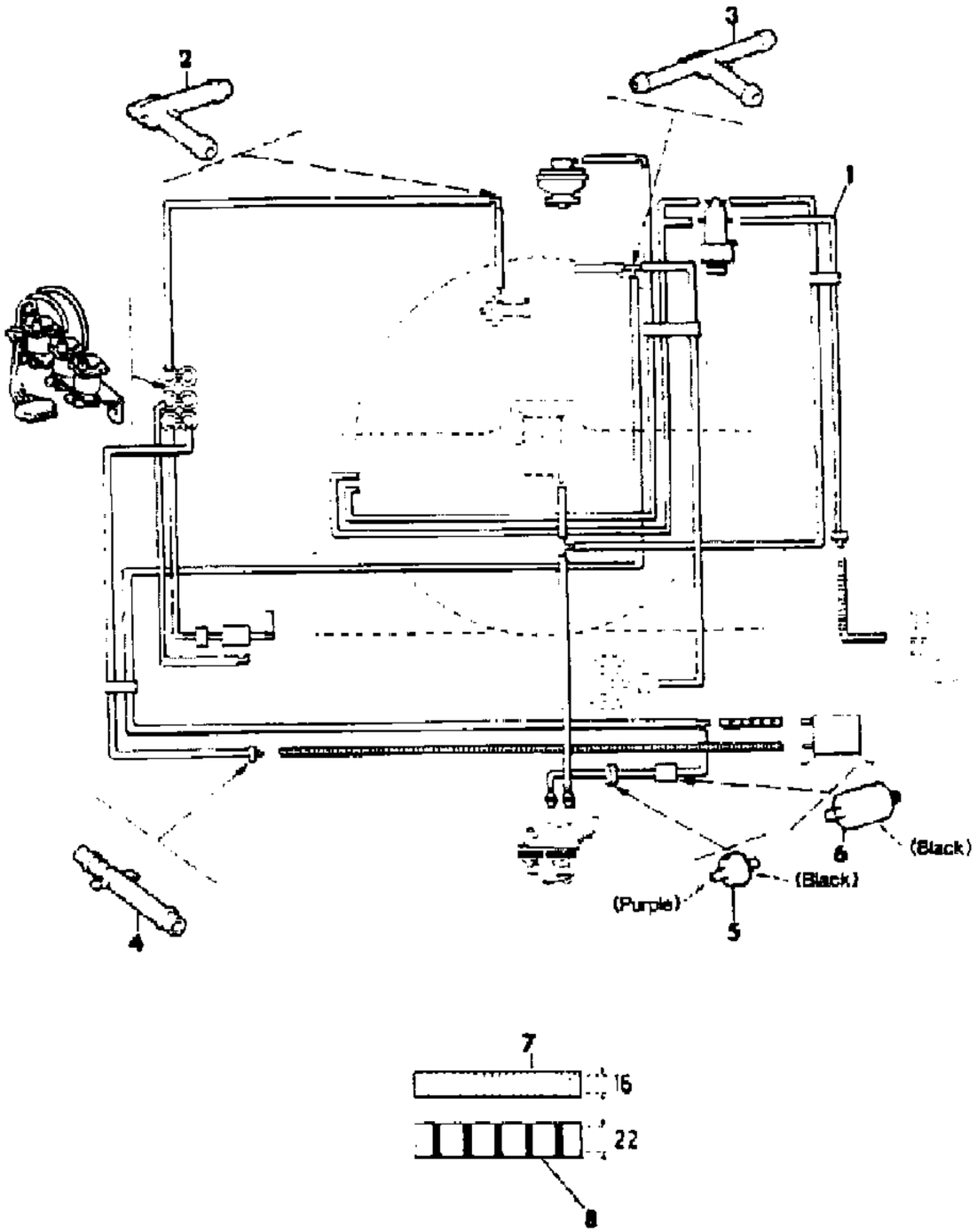

ITEM	PART NUMBER	QTY	BODY	MODEL	DESCRIPTION
1					HARNESS, Vacuum
					With Manual Transmission
	J324 0371	1			1981: Without US-California, without Heavy Duty Cooling, without Hilly Terrain, Identified CG
	J324 0369	1			1981: Without US-California, with Heavy Duty Cooling, without Hilly Terrain, Identified CE
	J324 0368	1			1981: Without US-California, without Heavy Duty Cooling, with Hilly Tertain, Identified CK
	J324 0375	1			1981: Without US-California, with Heavy Duty Cooling, with Hilly Terrain, Identified CD
	J324 0603	1			1981: US-California, with Heavy Duty Cooling, Identified CW
	J324 0751	1			1981: CANADA, without Heavy Duty Cooling, Identified EH
	J324 0752	1			1981: CANADA, with Heavy Duty Cooling, Identified EF
	J324 0752	1			EXPORT, with Heavy Duty Cooling, Non-Regulated Markets, Identified EF
	J324 0751	1			1981: EXPORT, without Heavy Duty Cooling, Non-Regulated Markets, Identified EH
	J324 0470	1		87,88	1981: EXPORT, without Heavy Duty Cooling, Australian Design Rules, Identified AG
	J324 0471	1		87,88	1981: EXPORT, with Heavy Duty Cooling, Australian Design Rules, Identified AH
	J324 2072	1			1982: Without US-California, without Heavy Duty Cooling, with Hilly Terrain
	J324 1355	1			1982: Without US-California, without Heavy Duty Cooling, without Hilly Terrain
	J324 1363	1			1982: Without US-California, with Heavy Duty Cooling, without Hilly Terrain
	J324 2073	1			1982: Without California, with Heavy Duty Cooling, with Hilly Terrain
	J324 2031	1			1982: US-California, with Heavy Duty Cooling
	J324 2149	1			1982: CANADA, without Heavy Duty Cooling
	J324 2150	1			1982: CANADA, with Heavy Duty Cooling
	J324 2604	1			1982: Japan, with Heavy Duty Cooling
	J324 2149	1		85,87,8	1982: EXPORT, without Heavy Duty Cooling, Non-Regulated Markets
	J324 2150	1		85,87,8	1982: EXPORT, with Heavy Duty Cooling, Non-Regulated Markets
	3300 1014	1			1983
	3300 1032	1			1983: High Altitude Operation

MODEL CODES

16=Cherokee 2 Dr.(1981-83)	78=Cherokee 4WD-4 Dr.(1984-86)	64=Comanche 2WD-6 Ft. Box(1986)	25=J-10 Truck 7 Ft. Box(1981-84)
17=Cherokee 2 Dr.(1981-83)	85=CJ-5 (1981-83)	66=Comanche 2WD-7 Ft. Box(1986)	26=J10 Truck 8 Ft. Box(1981-86)
73=Cherokee 2WD-2 Dr.(1984-86)	86=CJ-6(1981)	63=Comanche 4WD-6 Ft. Box(1986)	27=J-20 Truck 8 Ft. Box(1981-86)
74=Cherokee 2WD-4 Dr.(1984-86)	87=CJ-7(1981-86)	65=Comanche 4WD-7 Ft. Box(1986)	15=Wagoneer 4 Dr.(1981-83)
18=Cherokee 4 Dr.(1981-83)	88=CJ-8, Scrambler(1981-86)	15=Grand Wagoneer 4 Dr.(1984-86)	75=Wagoneer 4WD-4 Dr.(1984-86)
77=Cherokee 4WD-2 Dr.(1984-86)			

BODY
CJ=CJ-5, CJ-6, CJ-7, CJ-8, Scrambler(1981-86)
MJ=Comanche Pickup(1986)

STYLES
SJ=Wagoneer(1981-83), Grand Wagoneer(1984-86), Cherokee(1981-83), J-10, J-20(1981-86)
XJ=Wagoneer(1984-86), Cherokee(1984-86)

AR = Use as Required - = Non Illustrated Part P.A.R. = Paint as Required

EMISSION CONTROL VACUUM HARNESS SIX CYLINDER CJ-5,6,7,8, SCRAMBLER
Figure 25-700

81J25 700

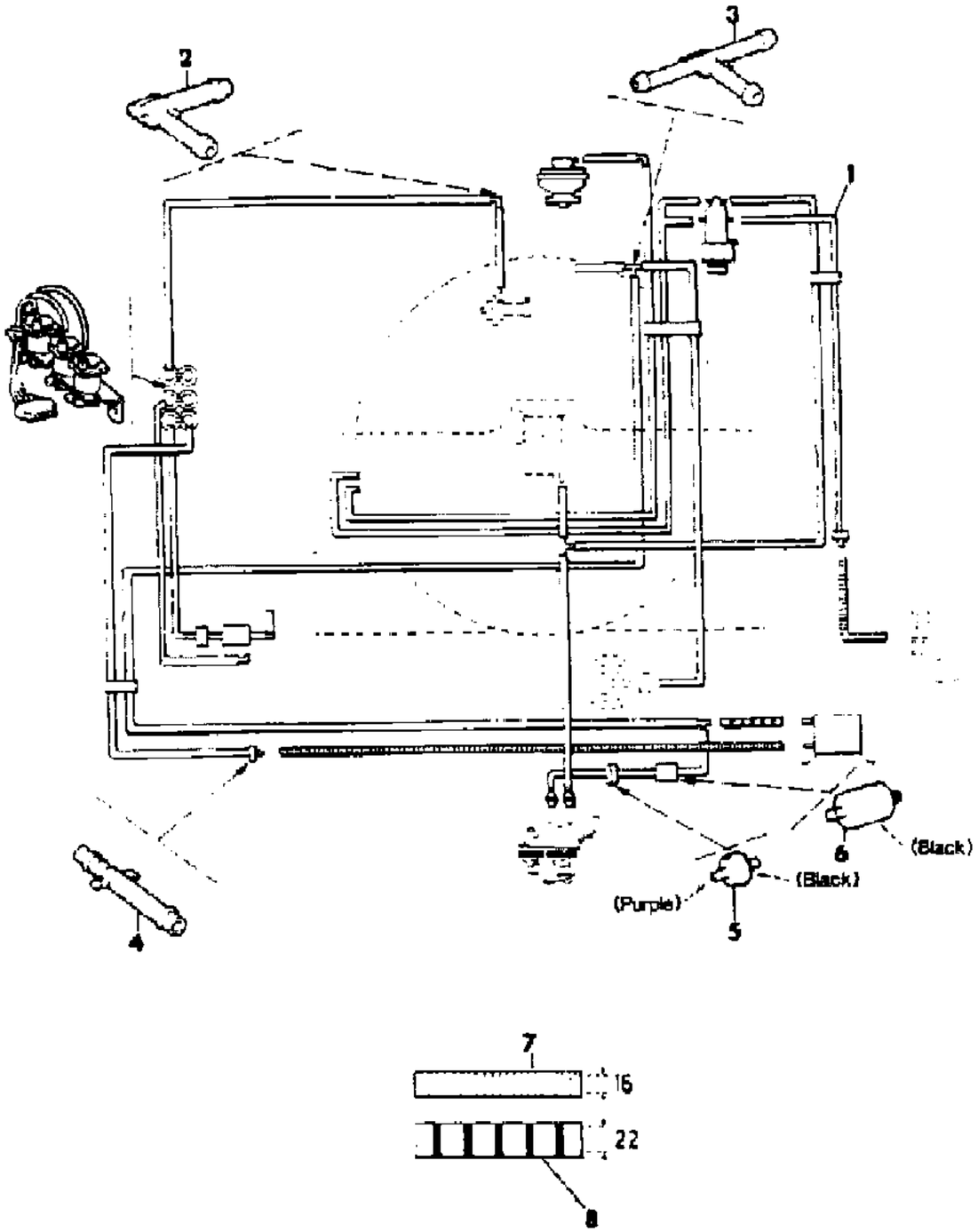

ITEM	PART NUMBER	QTY	BODY	MODEL	DESCRIPTION
	J324 2293	1		87,88	1983: EXPORT, without Heavy Duty Cooling, Sweden, Switzerland
	J324 2288	1		87,88	1983: EXPORT, with Heavy Duty Cooling, Sweden, Switzerland
	J805 1796	1			1983-84: EXPORT, with Heavy Duty Cooling, VAM, Built in Mexico, Engine Build Code "M", Non-Regulated Markets
	3300 1632	1			1983-85: Japan
	3300 1032	1			1984: Without US-California
	3300 2074	1			1984: Without US-California, with High Altitude Operation
	3300 1720	1		87,88	1984-85: EXPORT, Australian Design Rules, Sweden, Switzerland
	3300 1014	1			1985-86
	5300 2703	1			1985-86: Without US-California, with High Altitude Operation With Automatic Transmission
	J324 0367	1			1981: Without US-California, without Heavy Duty Cooling, Identified CN
	J324 0380	1			1981: Without US-California, with Heavy Duty Cooling, Identified CC
	J324 0604	1			1981: US-California, with Heavy Duty Cooling, Identified CV
	J324 0474	1			1981: CANADA, without Heavy Duty Cooling, Identified AL
	J324 0475	1			1981: CANADA, with Heavy Duty Cooling, Identified AM
	J324 0475	1		87,88	1981: EXPORT, with Heavy Duty Cooling, Non-Regulated Markets, Identified AM
	J324 0474	1		87,88	1981: EXPORT, without Heavy Duty Cooling, Non-Regulated Markets, Identified AL
	J324 0476	1		87,88	1981: EXPORT, without Heavy Duty Cooling, Australian Design Rules, Identified AN
	J324 0477	1		87,88	1981: EXPORT, with Heavy Duty Cooling, Australian Design Rules, Identified AP
	J324 1770	1			1982: Without US-California, without Heavy Duty Cooling, without Hilly Terrain
	J324 1358	1			1982: Without US-California, without Heavy Duty Cooling, with Hilly Terrain
	J324 1768	1			1982: Without US-California, with Heavy Duty Cooling, without Hilly Terrain
	J324 1372	1			1982: Without US-California, with Heavy Duty Cooling, with Hilly Terrain
	J324 2105	1			1982: US-California, with Heavy Duty Cooling
	J324 2147	1			1982: CANADA, without Heavy Duty Cooling
	J324 2148	1			1982: CANADA, with Heavy Duty Cooling

MODEL CODES
16=Cherokee 2 Dr.(1981-83)
17=Cherokee 2 Dr.(1981-83)
73=Cherokee 2WD-2 Dr.(1984-86)
74=Cherokee 2WD-4 Dr.(1984-86)
18=Cherokee 4 Dr.(1981-83)
77=Cherokee 4WD-2 Dr.(1984-86)
78=Cherokee 4WD-4 Dr.(1984-86)
85=CJ-5 (1981-83)
86=CJ-6(1981)
87=CJ-7(1981-86)
88=CJ-8, Scrambler(1981-86)
64=Comanche 2WD-6 Ft. Box(1986)
66=Comanche 2WD-7 Ft. Box(1986)
63=Comanche 4WD-6 Ft. Box(1986)
65=Comanche 4WD-7 Ft. Box(1986)
15=Grand Wagoneer 4 Dr.(1984-86)
25=J-10 Truck 7 Ft. Box(1981-84)
26=J10 Truck 8 Ft. Box(1981-86)
27=J-20 Truck 8 Ft. Box(1981-86)
15=Wagoneer 4 Dr.(1981-83)
75=Wagoneer 4WD-4 Dr.(1984-86)

BODY
CJ=CJ-5, CJ-6, CJ-7, CJ-8, Scrambler(1981-86)
MJ=Comanche Pickup(1986)

STYLES
SJ=Wagoneer(1981-83), Grand Wagoneer(1984-86), Cherokee(1981-83), J-10, J-20(1981-86)
XJ=Wagoneer(1984-86), Cherokee(1984-86)

AR = Use as Required - = Non Illustrated Part P.A.R. = Paint as Required

EMISSION CONTROL VACUUM HARNESS SIX CYLINDER CJ-5,6,7,8, SCRAMBLER
Figure 25-700

81J25 700

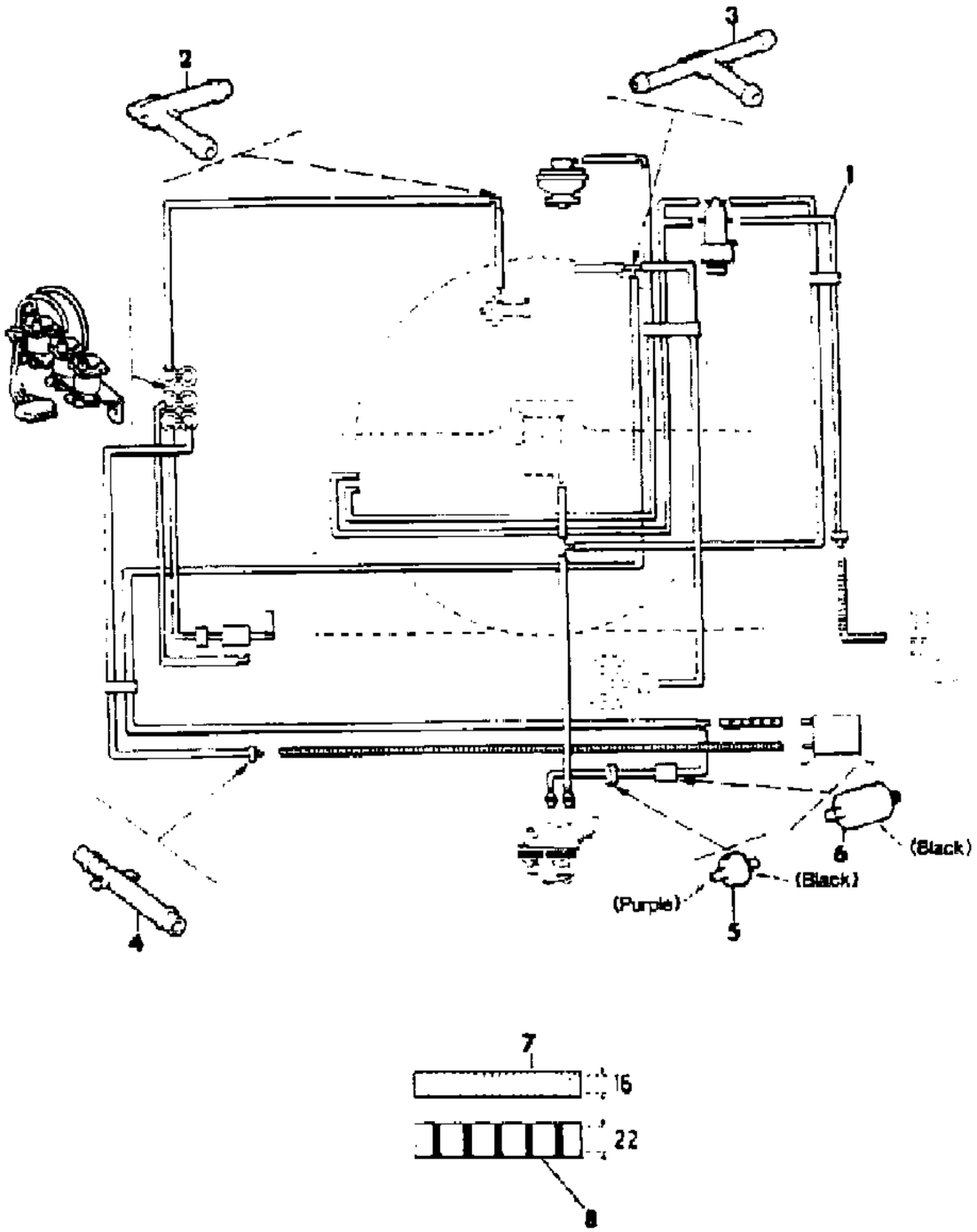

ITEM	PART NUMBER	QTY	BODY	MODEL	DESCRIPTION
	J324 2603	1			1982: Japan, with Heavy Duty Cooling
	J324 2147	1		87,88	1982: EXPORT, without Heavy Duty Cooling, Non-Regulated Markets
	J324 2148	1		87,88	1982: EXPORT, with Heavy Duty Cooling, Non-Regulated Markets
	J324 2091	1		87	1982: EXPORT, without Heavy Duty Cooling, Australian Design Rules
	J324 2093	1		87	1982: EXPORT, with Heavy Duty Cooling, Australian Design Rules
	J324 2294	1		87,88	1983: EXPORT, without Heavy Duty Cooling, Australian Design Rules, Sweden, Switzerland
	J324 2289	1		87,88	1983: EXPORT, with Heavy Duty Cooling, Australian Design Rules, Sweden, Switzerland
	3300 1032	1			1983-84: Without California
	3300 1015	1			1983-84: US-California
	J805 1841	1			1983-84: EXPORT, without Heavy Duty Cooling, VAM, Built in Mexico, Engine Build Code "M", Non-Regulated Markets
	J805 1840	1			1983-84: EXPORT, with Heavy Duty Cooling, VAM, Built in Mexico, Engine Build Code "M", Non-Regulated Markets
	3300 1633	1			1983-85: Japan
	J324 2262	1		87,88	1984-85: EXPORT, Sweden, Switzerland
	J324 2289	1		87,88	1984-85: EXPORT, Australian Design Rules With Manual or Automatic Transmission
	J324 0764	1			1981: EXPORT, with Heavy Duty Cooling, Economic Commission of Europe, Identified ES
	J324 0763	1			1981: EXPORT, without Heavy Duty Cooling, Economic Commission of Europe, Identified EP
	J324 2261	1		87,88	1982-85: EXPORT, without Heavy Duty Cooling, Economic Commission of Europe
	J324 2262	1		87,88	1982-85: EXPORT, with Heavy Duty Cooling, Economic Commission of Europe
	5300 0427	1			1983-86: EXPORT, without Heavy Duty Cooling, Non-Regulated Markets
	5300 0426	1			1983-86: EXPORT, with Heavy Duty Cooling, Non-Regulated Markets
	5300 0434	1			1983-86: CANADA
	3300 1015	1			1985-86
2	3300 0538	AR			ELBOW, 90 Degree
3	J323 9827	AR			CONNECTOR, Tee

MODEL CODES

16=Cherokee 2 Dr.(1981-83)	78=Cherokee 4WD-4 Dr.(1984-86)	64=Comanche 2WD-6 Ft. Box(1986)	25=J-10 Truck 7 Ft. Box(1981-84)
17=Cherokee 2 Dr.(1981-83)	85=CJ-5 (1981-83)	66=Comanche 2WD-7 Ft. Box(1986)	26=J10 Truck 8 Ft. Box(1981-86)
73=Cherokee 2WD-2 Dr.(1984-86)	86=CJ-6(1981)	63=Comanche 4WD-6 Ft. Box(1986)	27=J-20 Truck 8 Ft. Box(1981-86)
74=Cherokee 2WD-4 Dr.(1984-86)	87=CJ-7(1981-86)	65=Comanche 4WD-7 Ft. Box(1986)	15=Wagoneer 4 Dr.(1981-83)
18=Cherokee 4 Dr.(1981-83)	88=CJ-8, Scrambler(1981-86)	15=Grand Wagoneer 4 Dr.(1984-86)	75=Wagoneer 4WD-4 Dr.(1984-86)
77=Cherokee 4WD-2 Dr.(1984-86)			

BODY
CJ=CJ-5, CJ-6, CJ-7, CJ-8, Scrambler(1981-86)
MJ=Comanche Pickup(1986)

STYLES
SJ=Wagoneer(1981-83), Grand Wagoneer(1984-86), Cherokee(1981-83), J-10, J-20(1981-86)
XJ=Wagoneer(1984-86), Cherokee(1984-86)

AR = Use as Required - = Non Illustrated Part P.A.R. = Paint as Required

EMISSION CONTROL VACUUM HARNESS SIX CYLINDER CJ-5,6,7,8, SCRAMBLER
Figure 25-700

81J25 700

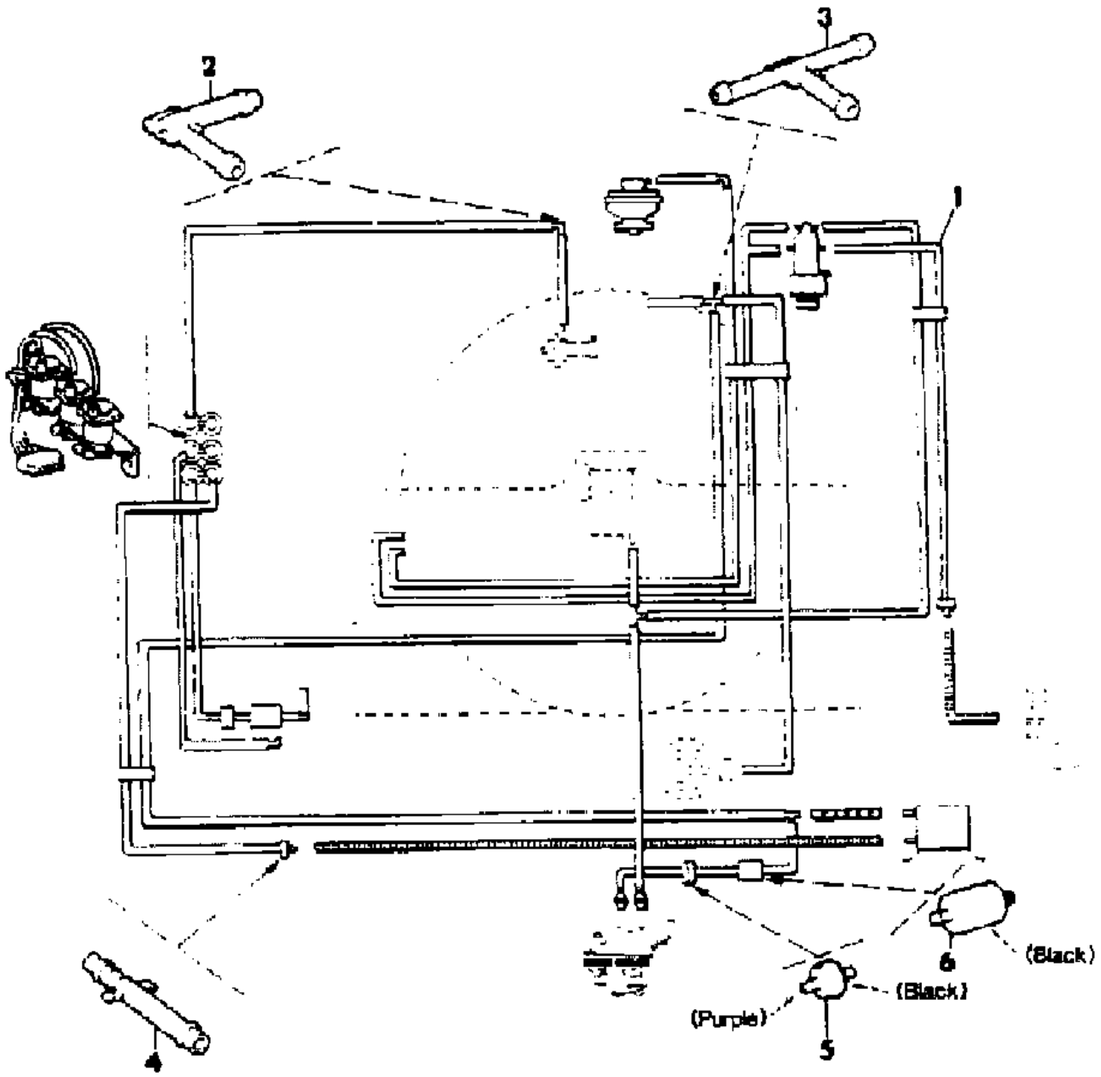

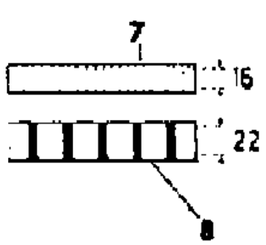

ITEM	PART NUMBER	QTY	BODY	MODEL	DESCRIPTION
4	3300 0537	AR			CONNECTOR
5	J323 6284	AR			VALVE, Delay
6	J323 9467	AR			RESERVOIR, Vacuum
7	8330 0079	AR			HOSE, Bulk
8	8350 1904	AR			HOSE, Bulk

MODEL CODES
16=Cherokee 2 Dr.(1981-83)
17=Cherokee 2 Dr.(1981-83)
73=Cherokee 2WD-2 Dr.(1984-86)
74=Cherokee 2WD-4 Dr.(1984-86)
18=Cherokee 4 Dr.(1981-83)
77=Cherokee 4WD-2 Dr.(1984-86)
78=Cherokee 4WD-4 Dr.(1984-86)
85=CJ-5 (1981-83)
86=CJ-6(1981)
87=CJ-7(1981-86)
88=CJ-8, Scrambler(1981-86)
64=Comanche 2WD-6 Ft. Box(1986)
66=Comanche 2WD-7 Ft. Box(1986)
63=Comanche 4WD-6 Ft. Box(1986)
65=Comanche 4WD-7 Ft. Box(1986)
15=Grand Wagoneer 4 Dr.(1984-86)
25=J-10 Truck 7 Ft. Box(1981-84)
26=J10 Truck 8 Ft. Box(1981-86)
27=J-20 Truck 8 Ft. Box(1981-86)
15=Wagoneer 4 Dr.(1981-83)
75=Wagoneer 4WD-4 Dr.(1984-86)

BODY
CJ=CJ-5, CJ-6, CJ-7, CJ-8, Scrambler(1981-86)
MJ=Comanche Pickup(1986)

STYLES
SJ=Wagoneer(1981-83), Grand Wagoneer(1984-86), Cherokee(1981-83), J-10, J-20(1981-86)
XJ=Wagoneer(1984-86), Cherokee(1984-86)

AR = Use as Required - = Non Illustrated Part P.A.R. = Paint as Required

EMISSION CONTROL COMPONENTS SIX CYLINDER CJ-5,6,7,8, SCRAMBLER
Figure 25-800

81J25 800

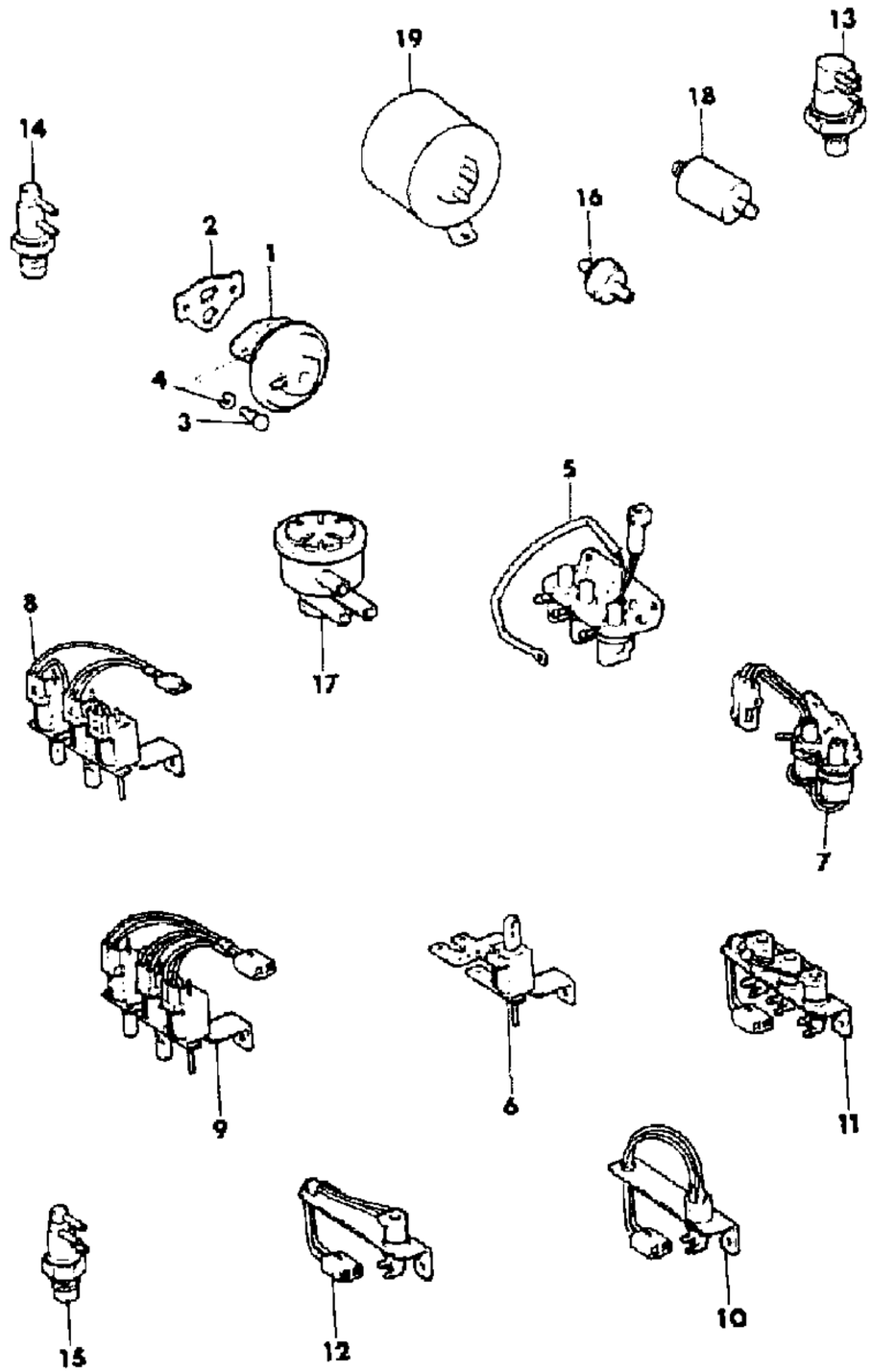

ITEM	PART NUMBER	QTY	BODY	MODEL	DESCRIPTION
1					VALVE, EGR
					With Manual Transmission
	J323 9607	1			1981: Without US-California, with Hilly Terrain
	J324 0097	1			1981: Without US-California, without Hilly Terrain, with 3.31 Axle Ratio
	J324 0098	1			1981: Without US-California, without Hilly Terrain, with 2.73 Axle Ratio
	J324 0187	1			1981: US-California
	J324 0189	1			1981-82: EXPORT, Economic Commission of Europe
	J324 0097	1			1982: Without Hilly Terrain
	J323 9369	1			1982: US-California
	J323 9369	1			1982: Japan
	J324 0097	1			1983: US-California
	J324 0189	1			1983-86: EXPORT, Economic Commission of Europe
	J324 0097	1			1983-85: Japan
	3300 0956	1		87,88	1983-85: Sweden, Switzerland
	J324 1729	1			1984: Without US-California
	J324 1729	1			1984-86: CANADA
	3300 0956	1		87,88	1984-85: EXPORT, Australian Design Rules
	J324 1782	1			1985-86: Without US-California
					With Automatic Transmission
	J324 0100	1			1981: Without US-California
	J324 0192	1			1981: US-California
	J324 0101	1		87,88	1981-82: EXPORT, Economic Commission of Europe
	J324 0102	1		87	1981-82: Australian Design Rules
	J324 0101	1			1982: Without US-California, without Hilly Terrain, with 3.31 Axle Ratio
	J324 0097	1			1982: Without US-California, without Hilly Terrain, with 2.73 Axle Ratio
	J323 9366	1			1982: US-California
	J323 9366	1			1982: Japan
	3300 0828	1		87,88	1983: US-California
	J324 0097	1		87,88	1983-85: EXPORT, Economic Commission of Europe, Australian Design Rules
	3300 0828	1		87	1983-85: Japan
	3300 0889	1		87,88	1983-85: Sweden, Switzerland
	J324 0191	1			1984-86: Without US-California, without High Altitude Operation
	J324 0098	1			1984-86: With High Altitude Operation
	J324 0191	1			1984-86: CANADA

MODEL CODES

16=Cherokee 2 Dr.(1981-83)
17=Cherokee 2 Dr.(1981-83)
73=Cherokee 2WD-2 Dr.(1984-86)
74=Cherokee 2WD-4 Dr.(1984-86)
18=Cherokee 4 Dr.(1981-83)
77=Cherokee 4WD-2 Dr.(1984-86)
78=Cherokee 4WD-4 Dr.(1984-86)
85=CJ-5 (1981-83)
86=CJ-6(1981)
87=CJ-7(1981-86)
88=CJ-8, Scrambler(1981-86)
64=Comanche 2WD-6 Ft. Box(1986)
66=Comanche 2WD-7 Ft. Box(1986)
63=Comanche 4WD-6 Ft. Box(1986)
65=Comanche 4WD-7 Ft. Box(1986)
15=Grand Wagoneer 4 Dr.(1984-86)
25=J-10 Truck 7 Ft. Box(1981-84)
26=J10 Truck 8 Ft. Box(1981-86)
27=J-20 Truck 8 Ft. Box(1981-86)
15=Wagoneer 4 Dr.(1981-83)
75=Wagoneer 4WD-4 Dr.(1984-86)

BODY
CJ=CJ-5, CJ-6, CJ-7, CJ-8, Scrambler(1981-86)
MJ=Comanche Pickup(1986)

STYLES
SJ=Wagoneer(1981-83), Grand Wagoneer(1984-86), Cherokee(1981-83), J-10, J-20(1981-86)
XJ=Wagoneer(1984-86), Cherokee(1984-86)

AR = Use as Required - = Non Illustrated Part P.A.R. = Paint as Required

EMISSION CONTROL COMPONENTS SIX CYLINDER CJ-5,6,7,8, SCRAMBLER
Figure 25-800

81J25 800

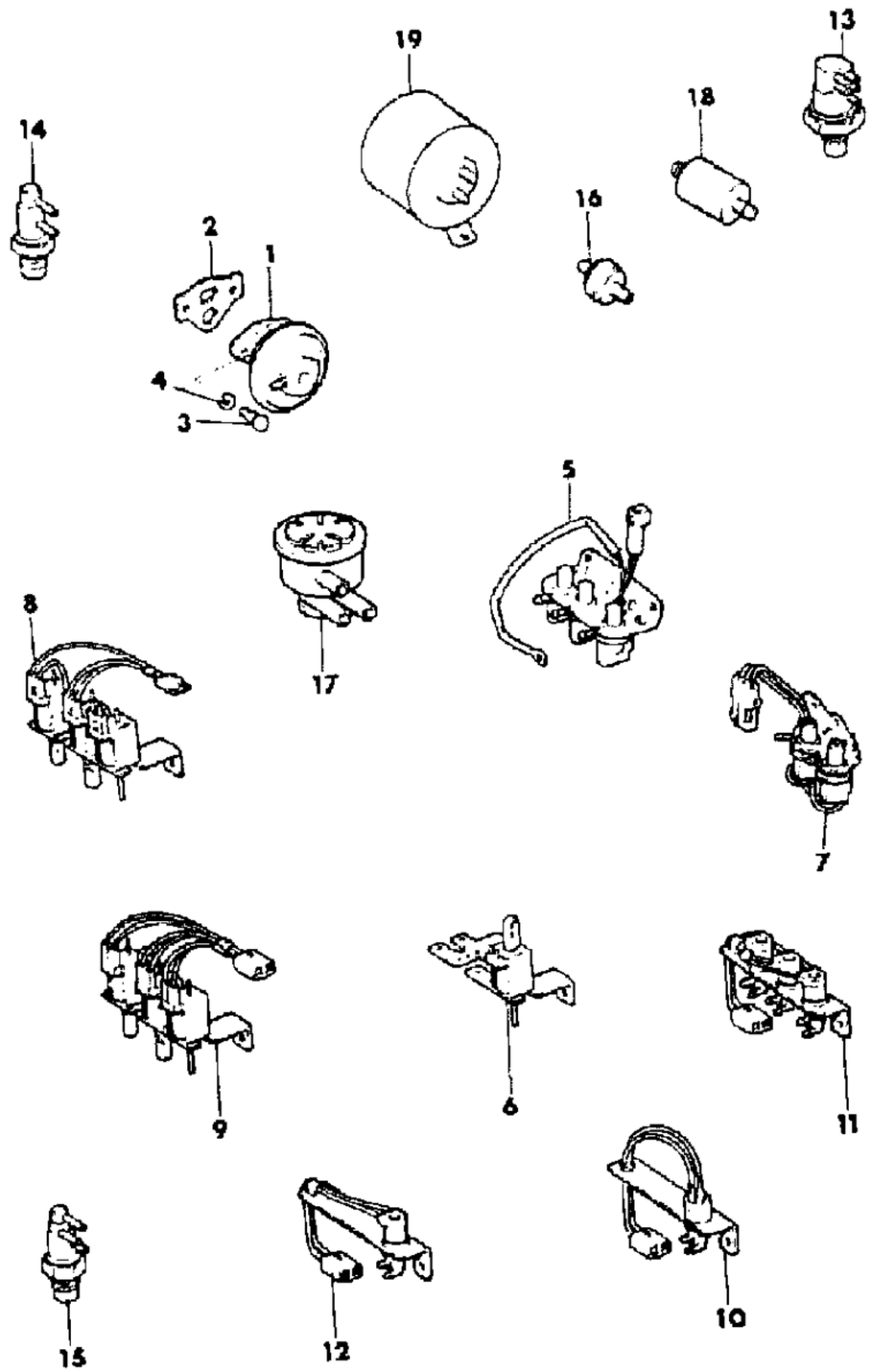

ITEM	PART NUMBER	QTY	BODY	MODEL	DESCRIPTION
	J324 0097	1			1986: EXPORT, Economic Commission of Europe
					With Manual or Automatic Transmission
	J324 0098	1			1981: CANADA
	J324 0098	1			1981-82: EXPORT, Non-Regulated Markets
	J324 0097	1			1982: With Hilly Terrain
	J324 0098	1			1982: CANADA
	J324 1729	1			1983: Without US-California
	J324 0097	1			1984-86: US-California
2	J322 1283	1			GASKET, EGR
3	J018 0078	2			BOLT
4	J012 0214	2			WASHER, Lock
5					SOLENOID, Vacuum
	J323 9374	1			1981: US-California
6					SOLENOID, Vacuum
	J323 9677	1			1981-82: US-49 States
	J323 9677	1			1982: CANADA, Japan
7					SOLENOID, Vacuum
	J324 0803	1			1982: US-California, Japan
	J324 0803	1			1983-86
8					SOLENOID, Vacuum
	J323 9487	1			1981: US-California
9					SOLENOID, Vacuum
	J324 1165	1			1982: US-California
10					SOLENOID, Vacuum
	3300 0632	1			1983-84: CANADA
11					SOLENOID, Vacuum
	3300 1945	1			1983-86
12					SOLENOID, Vacuum
	3300 1948	1			1985: CANADA
13					SWITCH, Dual Function CTO
					Intake Manifold Coolant Passage
	J323 8932	1			1981
	J323 8932	1			1982: EXPORT, Australian Design Rules, Economic
					Commission of Europe, Non-Regulated Markets
	J323 8932	1			1982: US-49 States, CANADA
	J324 1784	1			1982: US-California
	J324 1784	1		87	1982: Japan
	J323 8932	1			1983: With Automatic Transmission, without High Altitude
					Operation

MODEL CODES

16=Cherokee 2 Dr.(1981-83)	78=Cherokee 4WD-4 Dr.(1984-86)	64=Comanche 2WD-6 Ft. Box(1986)	25=J-10 Truck 7 Ft. Box(1981-84)
17=Cherokee 2 Dr.(1981-83)	85=CJ-5 (1981-83)	66=Comanche 2WD-7 Ft. Box(1986)	26=J10 Truck 8 Ft. Box(1981-86)
73=Cherokee 2WD-2 Dr.(1984-86)	86=CJ-6(1981)	63=Comanche 4WD-6 Ft. Box(1986)	27=J-20 Truck 8 Ft. Box(1981-86)
74=Cherokee 2WD-4 Dr.(1984-86)	87=CJ-7(1981-86)	65=Comanche 4WD-7 Ft. Box(1986)	15=Wagoneer 4 Dr.(1981-83)
18=Cherokee 4 Dr.(1981-83)	88=CJ-8, Scrambler(1981-86)	15=Grand Wagoneer 4 Dr.(1984-86)	75=Wagoneer 4WD-4 Dr.(1984-86)
77=Cherokee 4WD-2 Dr.(1984-86)			

BODY
CJ=CJ-5, CJ-6, CJ-7, CJ-8, Scrambler(1981-86)
MJ=Comanche Pickup(1986)

STYLES
SJ=Wagoneer(1981-83), Grand Wagoneer(1984-86), Cherokee(1981-83), J-10, J-20(1981-86)
XJ=Wagoneer(1984-86), Cherokee(1984-86)

AR = Use as Required - = Non Illustrated Part P.A.R. = Paint as Required

EMISSION CONTROL COMPONENTS SIX CYLINDER CJ-5,6,7,8, SCRAMBLER
Figure 25-800

81J25 800

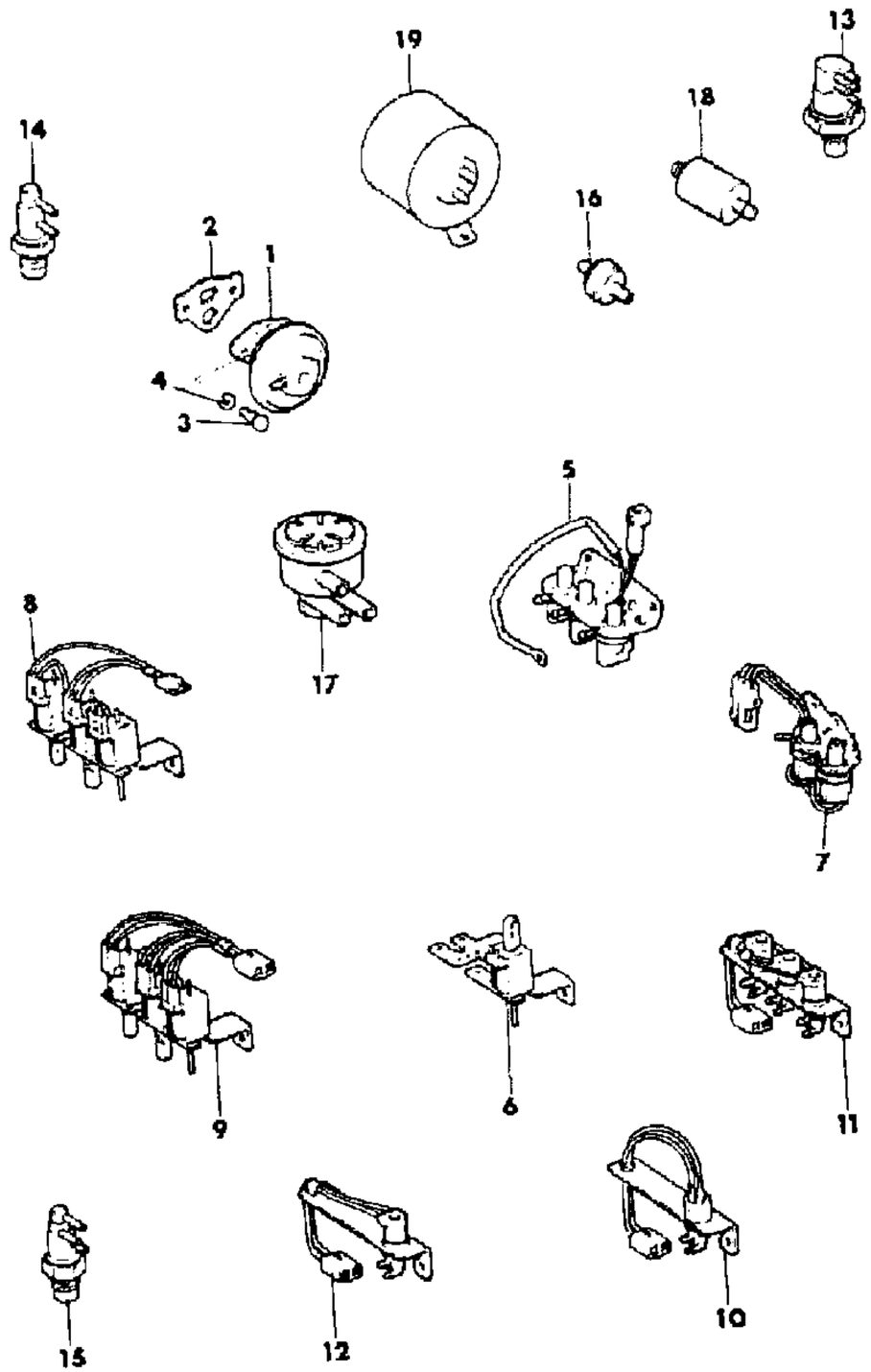

ITEM	PART NUMBER	QTY	BODY	MODEL	DESCRIPTION
	J323 8932	1			1984: US-California, EXPORT, without Non-Regulated Markets
	J323 8932	1			1985-86: US-50 States, EXPORT, without Non-Regulated Markets
14					SWITCH, EGR, CTO
					Left Side of Block
	J322 8288	1			1981: EXPORT, Non-Regulated Markets, with Four Speed Transmission
					SWITCH, EGR, CTO
					Intake Manifold Coolant Passage
	J324 1675	1			1983-86: CANADA
	J324 1675	1			1983: High Altitude Operation, with Automatic Transmission
	J324 1675	1			1984: US-49 States, CANADA
	J324 1675	1		87	1986: CANADA
15					SWITCH, HDC, CTO
					Intake Manifold Coolant Passage
	J535 8881	1			1981-86
					SWITCH, Spark, CTO
					Left Side of Block
	J323 5917	1			1981: Non-Regulated Markets, with Four Speed Transmission
					SWITCH, Spark, CTO
					Intake Manifold Coolant Passage
	J323 5917	1			1983: Non-Regulated Markets
	J323 5917	1			1984-86: Non-Regulated Markets
16					VALVE, Delay
	J323 7293	1			Black, Brown
	J323 5261	1			Black, Grey
	J323 9134	1			Black, Orange
	J323 6284	1			Black, Purple
					Black, Red
	3300 1440	1		87	1983-85: Japan
	J323 1379	1			Black, White
	J323 1118	1			Black, Yellow
					VALVE, Reverse Delay
	5300 2381	1			White, Blue
	J323 5939	1			White, Brown
	J323 7184	1			White, Gold
	J324 1800	1			White, Green
	J323 5938	1			White, Grey
	J323 9383	1			White, Orange

MODEL CODES

16=Cherokee 2 Dr.(1981-83)
17=Cherokee 2 Dr.(1981-83)
73=Cherokee 2WD-2 Dr.(1984-86)
74=Cherokee 2WD-4 Dr.(1984-86)
18=Cherokee 4 Dr.(1981-83)
77=Cherokee 4WD-2 Dr.(1984-86)
78=Cherokee 4WD-4 Dr.(1984-86)
85=CJ-5 (1981-83)
86=CJ-6(1981)
87=CJ-7(1981-86)
88=CJ-8, Scrambler(1981-86)
64=Comanche 2WD-6 Ft. Box(1986)
66=Comanche 2WD-7 Ft. Box(1986)
63=Comanche 4WD-6 Ft. Box(1986)
65=Comanche 4WD-7 Ft. Box(1986)
15=Grand Wagoneer 4 Dr.(1984-86)
25=J-10 Truck 7 Ft. Box(1981-84)
26=J10 Truck 8 Ft. Box(1981-86)
27=J-20 Truck 8 Ft. Box(1981-86)
15=Wagoneer 4 Dr.(1981-83)
75=Wagoneer 4WD-4 Dr.(1984-86)

BODY
CJ=CJ-5, CJ-6, CJ-7, CJ-8, Scrambler(1981-86)
MJ=Comanche Pickup(1986)

STYLES
SJ=Wagoneer(1981-83), Grand Wagoneer(1984-86), Cherokee(1981-83), J-10, J-20(1981-86)
XJ=Wagoneer(1984-86), Cherokee(1984-86)

AR = Use as Required - = Non Illustrated Part P.A.R. = Paint as Required

81J25 800

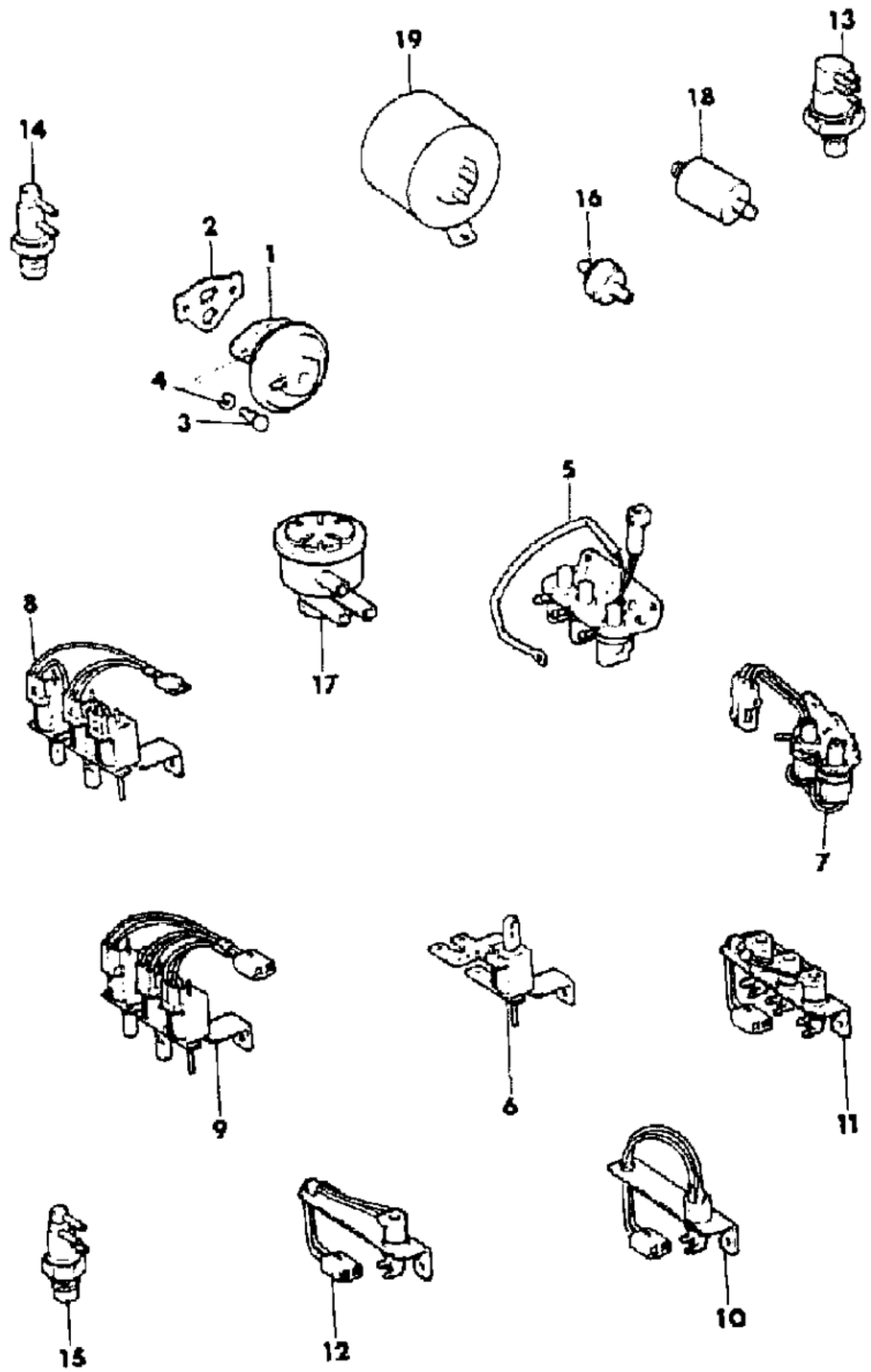

ITEM	PART NUMBER	QTY	BODY	MODEL	DESCRIPTION
	J323 6285	1			White, Purple
	J323 7131	1			White, Red
	J323 7141	1			White, Yellow
					VALVE, Two Way Delay
	J323 7255	1			Orange, Orange
17	J323 3991	1			VALVE, Non-Linear
18					RESERVOIR, Vacuum
	J323 9467	1			Black
	J323 9603	1			Black, White
19	5300 1068	1			TANK, Vacuum

MODEL CODES
16=Cherokee 2 Dr.(1981-83)
17=Cherokee 2 Dr.(1981-83)
73=Cherokee 2WD-2 Dr.(1984-86)
74=Cherokee 2WD-4 Dr.(1984-86)
18=Cherokee 4 Dr.(1981-83)
77=Cherokee 4WD-2 Dr.(1984-86)
78=Cherokee 4WD-4 Dr.(1984-86)
85=CJ-5 (1981-83)
86=CJ-6(1981)
87=CJ-7(1981-86)
88=CJ-8, Scrambler(1981-86)
64=Comanche 2WD-6 Ft. Box(1986)
66=Comanche 2WD-7 Ft. Box(1986)
63=Comanche 4WD-6 Ft. Box(1986)
65=Comanche 4WD-7 Ft. Box(1986)
15=Grand Wagoneer 4 Dr.(1984-86)
25=J-10 Truck 7 Ft. Box(1981-84)
26=J10 Truck 8 Ft. Box(1981-86)
27=J-20 Truck 8 Ft. Box(1981-86)
15=Wagoneer 4 Dr.(1981-83)
75=Wagoneer 4WD-4 Dr.(1984-86)

BODY
CJ=CJ-5, CJ-6, CJ-7, CJ-8, Scrambler(1981-86)
MJ=Comanche Pickup(1986)

STYLES
SJ=Wagoneer(1981-83), Grand Wagoneer(1984-86), Cherokee(1981-83), J-10, J-20(1981-86)
XJ=Wagoneer(1984-86), Cherokee(1984-86)

AR = Use as Required - = Non Illustrated Part P.A.R. = Paint as Required

EMISSION CONTROL SWITCHES CJ-5,6,7,8, SCRAMBLER
Figure 25-900

81J25 900

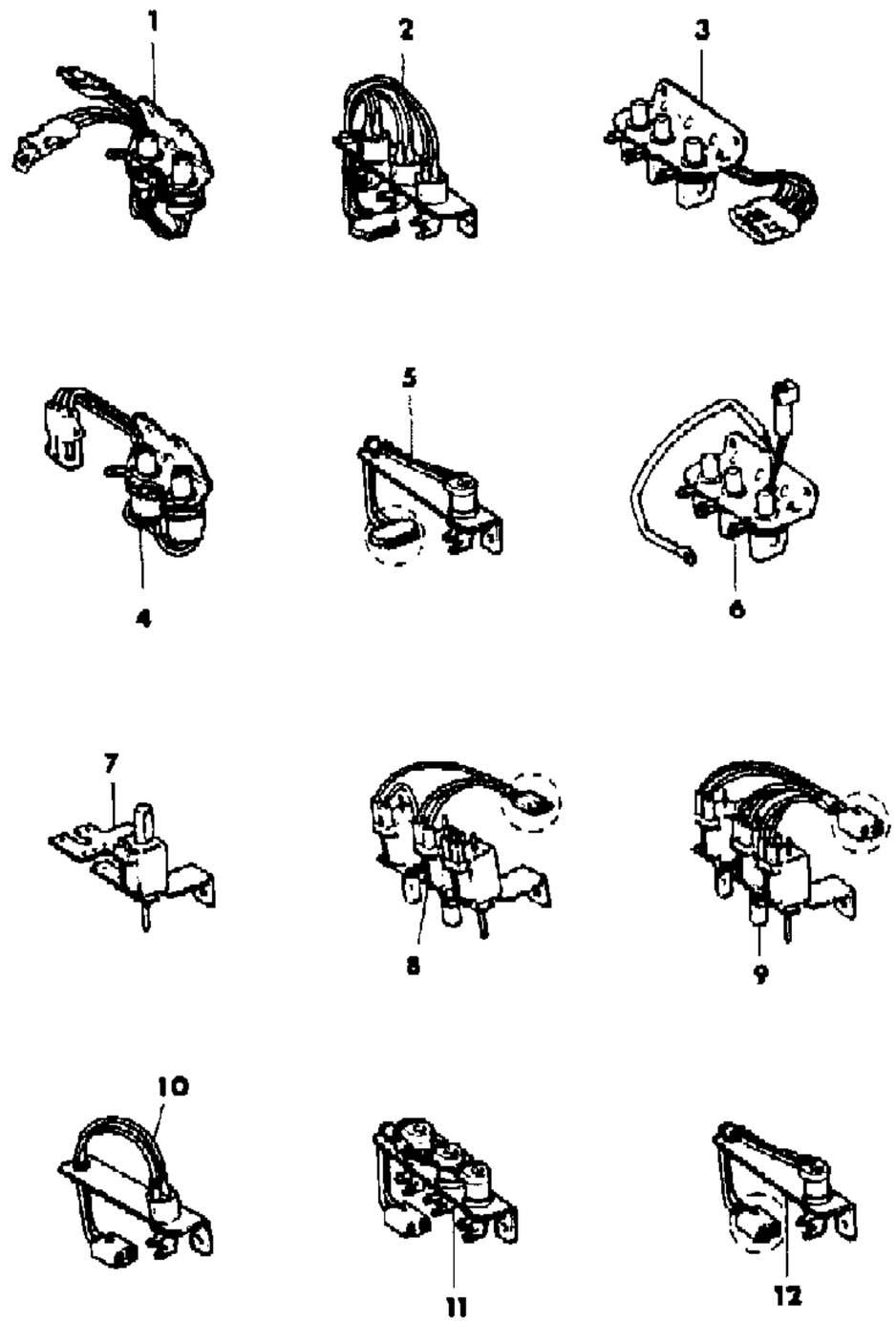

ITEM	PART NUMBER	QTY	BODY	MODEL	DESCRIPTION
1					SWITCH, Emission
	J323 7189	1			With Manual Transmission
	J323 6838	1			With Automatic Transmission
2	5300 0895	1			SWITCH, Emission
3	J324 1698	1			SWITCH, Emission
4	J324 0803	1			SWITCH, Emission
5	3300 1996	1			SWITCH, Emission
6	J323 9374	1			SWITCH, Emission
7	J324 9677	1			SWITCH, Emission
8	J323 9487	1			SWITCH, Emission
9	J324 1165	1			SWITCH, Emission
10	3300 0632	1			SWITCH, Emission
11	3300 1945	1			SWITCH, Emission
12	3300 1946	1			SWITCH, Emission

Emission Switch #2 Thru 6 Mounted on Firewall. Emission Switch #1, and 7 Thru 12 Mounted on Rocker Arm Cover. (c) End of decal is open

MODEL CODES

16=Cherokee 2 Dr.(1981-83)
17=Cherokee 2 Dr.(1981-83)
73=Cherokee 2WD-2 Dr.(1984-86)
74=Cherokee 2WD-4 Dr.(1984-86)
18=Cherokee 4 Dr.(1981-83)
77=Cherokee 4WD-2 Dr.(1984-86)
78=Cherokee 4WD-4 Dr.(1984-86)
85=CJ-5 (1981-83)
86=CJ-6(1981)
87=CJ-7(1981-86)
88=CJ-8, Scrambler(1981-86)
64=Comanche 2WD-6 Ft. Box(1986)
66=Comanche 2WD-7 Ft. Box(1986)
63=Comanche 4WD-6 Ft. Box(1986)
65=Comanche 4WD-7 Ft. Box(1986)
15=Grand Wagoneer 4 Dr.(1984-86)
25=J-10 Truck 7 Ft. Box(1981-84)
26=J10 Truck 8 Ft. Box(1981-86)
27=J-20 Truck 8 Ft. Box(1981-86)
15=Wagoneer 4 Dr.(1981-83)
75=Wagoneer 4WD-4 Dr.(1984-86)

BODY
CJ=CJ-5, CJ-6, CJ-7, CJ-8, Scrambler(1981-86)
MJ=Comanche Pickup(1986)

STYLES
SJ=Wagoneer(1981-83), Grand Wagoneer(1984-86), Cherokee(1981-83), J-10, J-20(1981-86)
XJ=Wagoneer(1984-86), Cherokee(1984-86)

AR = Use as Required - = Non Illustrated Part P.A.R. = Paint as Required

« RETURN TO GROUP INDEX

81J25 1000

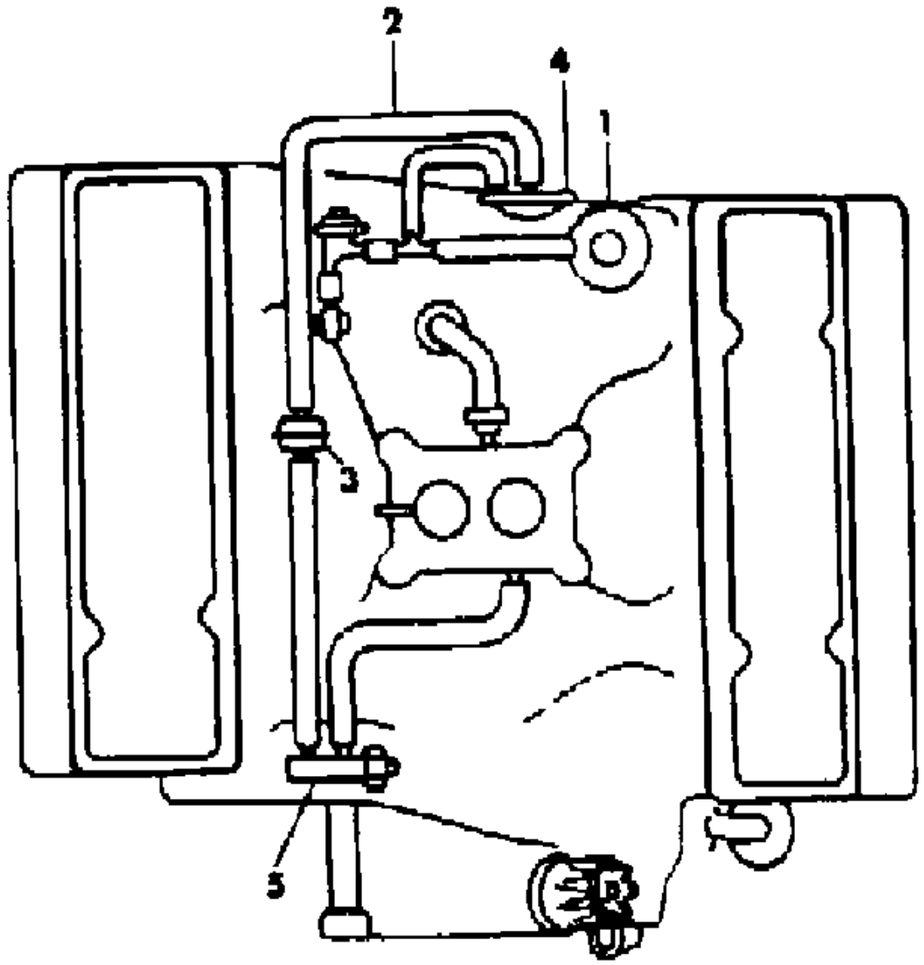

ITEM	PART NUMBER	QTY	BODY	MODEL	DESCRIPTION
1					VALVE, EGR
	J324 0053	1			Without US-California, without Hilly Terrain, with Manual Transmission
	J324 0279	1			Without US-California, with Automatic Transmission
	J323 9362	1			CANADA
	J323 9362	1			EXPORT, Non-Regulated Markets
	J324 0189	1		85,87	EXPORT, Economic Commission of Europe
2					HARNESS, Vacuum
					With Manual Transmission
	J324 0400	1			Without US-California, without Heavy Duty Cooling, Identified BT
	J324 0755	1			Without US-California, without Heavy Duty Cooling, Identified EK
	J324 0756	1			Without US-California, with Heavy Duty Cooling, Identified EL
	J324 0753	1			CANADA, without Heavy Duty Cooling, Identified EG
	J324 0754	1			CANADA, with Heavy Duty Cooling, Identified EJ
	J324 0753	1		85,87	EXPORT, Non-Regulated Markets, without Heavy Duty Cooling, Identified EG
	J324 0754	1		86,87	EXPORT, Non-Regulated Markets, with Heavy Duty Cooling, Identified EJ
					With Automatic Transmission
	J324 0378	1			Without US-California, with Heavy Duty Cooling, Identified BS
	J324 0488	1			CANADA, without Heavy Duty Cooling, Identified BP
	J324 0489	1			CANADA, with Heavy Duty Cooling, Identified BR
	J324 0488	1		87	EXPORT, Non-Regulated Markets, without Heavy Duty Cooling, Identified BP
	J324 0489	1		87	EXPORT, Non-Regulated Markets, with Heavy Duty Cooling, Identified BR
3					VALVE, Delay
	J323 7293	1			Black, Brown
	J323 5261	1			Black, Grey
	J323 6284	1			Black, Purple
	J323 1379	1			Black, White
	J323 1118	1			Black, Yellow
4	J323 5329	1			SWITCH, Thermal Vacuum
5	J324 1675	1			VALVE, EGR CTO

MODEL CODES

16=Cherokee 2 Dr.(1981-83)	78=Cherokee 4WD-4 Dr.(1984-86)	64=Comanche 2WD-6 Ft. Box(1986)	25=J-10 Truck 7 Ft. Box(1981-84)
17=Cherokee 2 Dr.(1981-83)	85=CJ-5 (1981-83)	66=Comanche 2WD-7 Ft. Box(1986)	26=J10 Truck 8 Ft. Box(1981-86)
73=Cherokee 2WD-2 Dr.(1984-86)	86=CJ-6(1981)	63=Comanche 4WD-6 Ft. Box(1986)	27=J-20 Truck 8 Ft. Box(1981-86)
74=Cherokee 2WD-4 Dr.(1984-86)	87=CJ-7(1981-86)	65=Comanche 4WD-7 Ft. Box(1986)	15=Wagoneer 4 Dr.(1981-83)
18=Cherokee 4 Dr.(1981-83)	88=CJ-8, Scrambler(1981-86)	15=Grand Wagoneer 4 Dr.(1984-86)	75=Wagoneer 4WD-4 Dr.(1984-86)
77=Cherokee 4WD-2 Dr.(1984-86)			

BODY
CJ=CJ-5, CJ-6, CJ-7, CJ-8, Scrambler(1981-86)
MJ=Comanche Pickup(1986)

STYLES
SJ=Wagoneer(1981-83), Grand Wagoneer(1984-86), Cherokee(1981-83), J-10, J-20(1981-86)
XJ=Wagoneer(1984-86), Cherokee(1984-86)

AR = Use as Required - = Non Illustrated Part P.A.R. = Paint as Required

« RETURN TO GROUP INDEX

EMISSION CONTROLS FOUR CYLINDER, DIESEL XJ CHEROKEE, XJ WAGONEER, COMANCHE
Figure 25-1100

81J25 1100

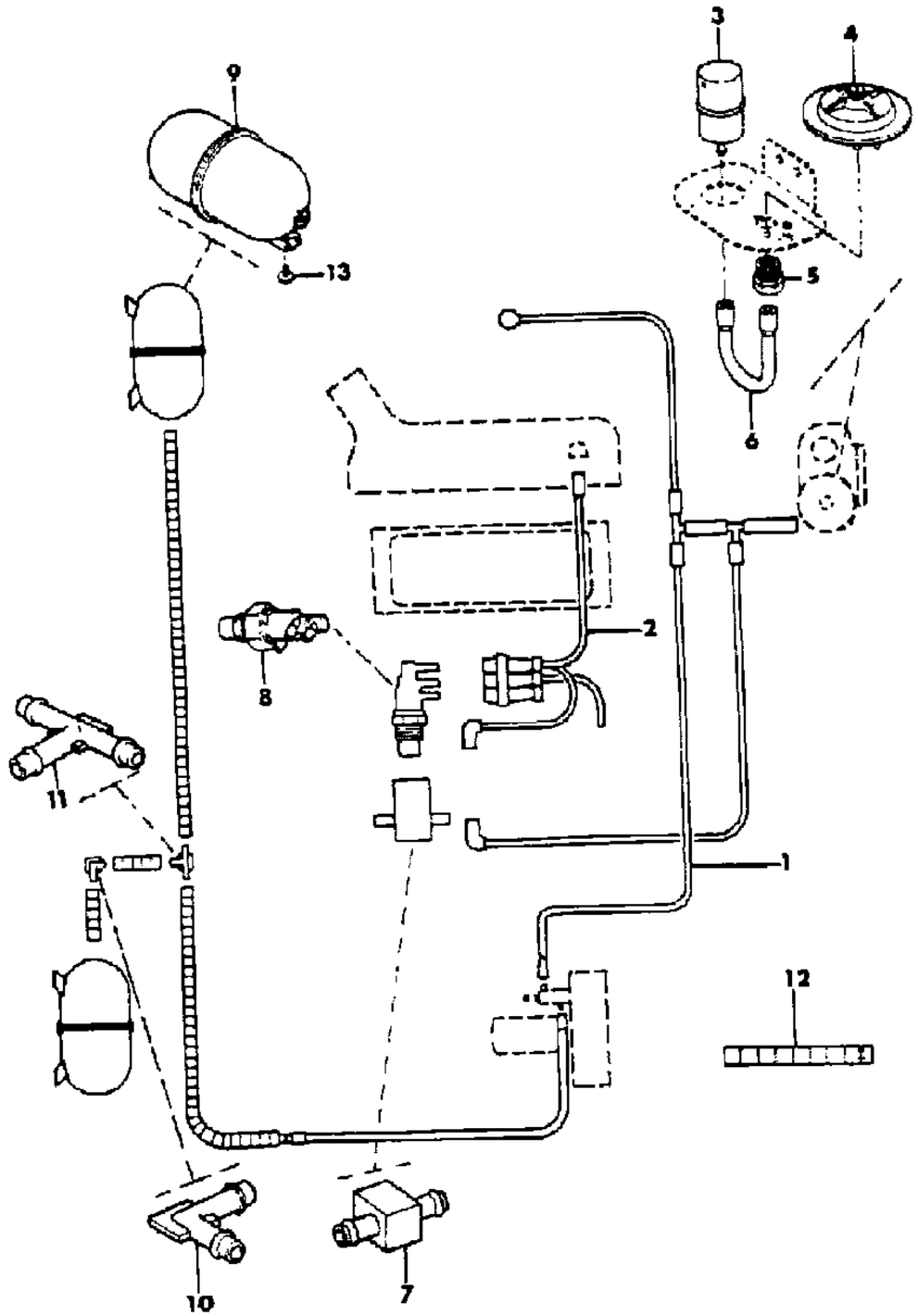

ITEM	PART NUMBER	QTY	BODY	MODEL	DESCRIPTION
1	5300 2441	1			HARNESS ASSEMBLY, Vacuum ***
2	5300 1927	1			HARNESS ASSEMBLY, Vacuum ***
3	5300 1929	1			FILTER, Pressure Regulator
4	5300 1928	1			REGULATOR, Pressure ***
5	3420 2172	1			NUT
6	5300 2240	1			HOSE
7	5300 1859	1			TUBE ASSEMBLY, CTO, Switch ***
8	5300 1747	1			SWITCH, CTO
9	5300 2549	2			RESERVOIR, Vacuum
10	3300 2356	AR			ELBOW, 90 Degree
11	J323 2982	1			CONNECTOR, Tee
12	8330 0080	AR			HOSE
13	J400 2359	4			SCREW

MODEL CODES

16=Cherokee 2 Dr.(1981-83)
17=Cherokee 2 Dr.(1981-83)
73=Cherokee 2WD-2 Dr.(1984-86)
74=Cherokee 2WD-4 Dr.(1984-86)
18=Cherokee 4 Dr.(1981-83)
77=Cherokee 4WD-2 Dr.(1984-86)
78=Cherokee 4WD-4 Dr.(1984-86)
85=CJ-5 (1981-83)
86=CJ-6(1981)
87=CJ-7(1981-86)
88=CJ-8, Scrambler(1981-86)
64=Comanche 2WD-6 Ft. Box(1986)
66=Comanche 2WD-7 Ft. Box(1986)
63=Comanche 4WD-6 Ft. Box(1986)
65=Comanche 4WD-7 Ft. Box(1986)
15=Grand Wagoneer 4 Dr.(1984-86)
25=J-10 Truck 7 Ft. Box(1981-84)
26=J10 Truck 8 Ft. Box(1981-86)
27=J-20 Truck 8 Ft. Box(1981-86)
15=Wagoneer 4 Dr.(1981-83)
75=Wagoneer 4WD-4 Dr.(1984-86)

BODY
CJ=CJ-5, CJ-6, CJ-7, CJ-8, Scrambler(1981-86)
MJ=Comanche Pickup(1986)

STYLES
SJ=Wagoneer(1981-83), Grand Wagoneer(1984-86), Cherokee(1981-83), J-10, J-20(1981-86)
XJ=Wagoneer(1984-86), Cherokee(1984-86)

AR = Use as Required - = Non Illustrated Part P.A.R. = Paint as Required

« RETURN TO GROUP INDEX

EMISSION CONTROLS 1984-85 FOUR CYLINDER, GAS XJ CHEROKEE, XJ WAGONEER
Figure 25-1200

81J25 1200

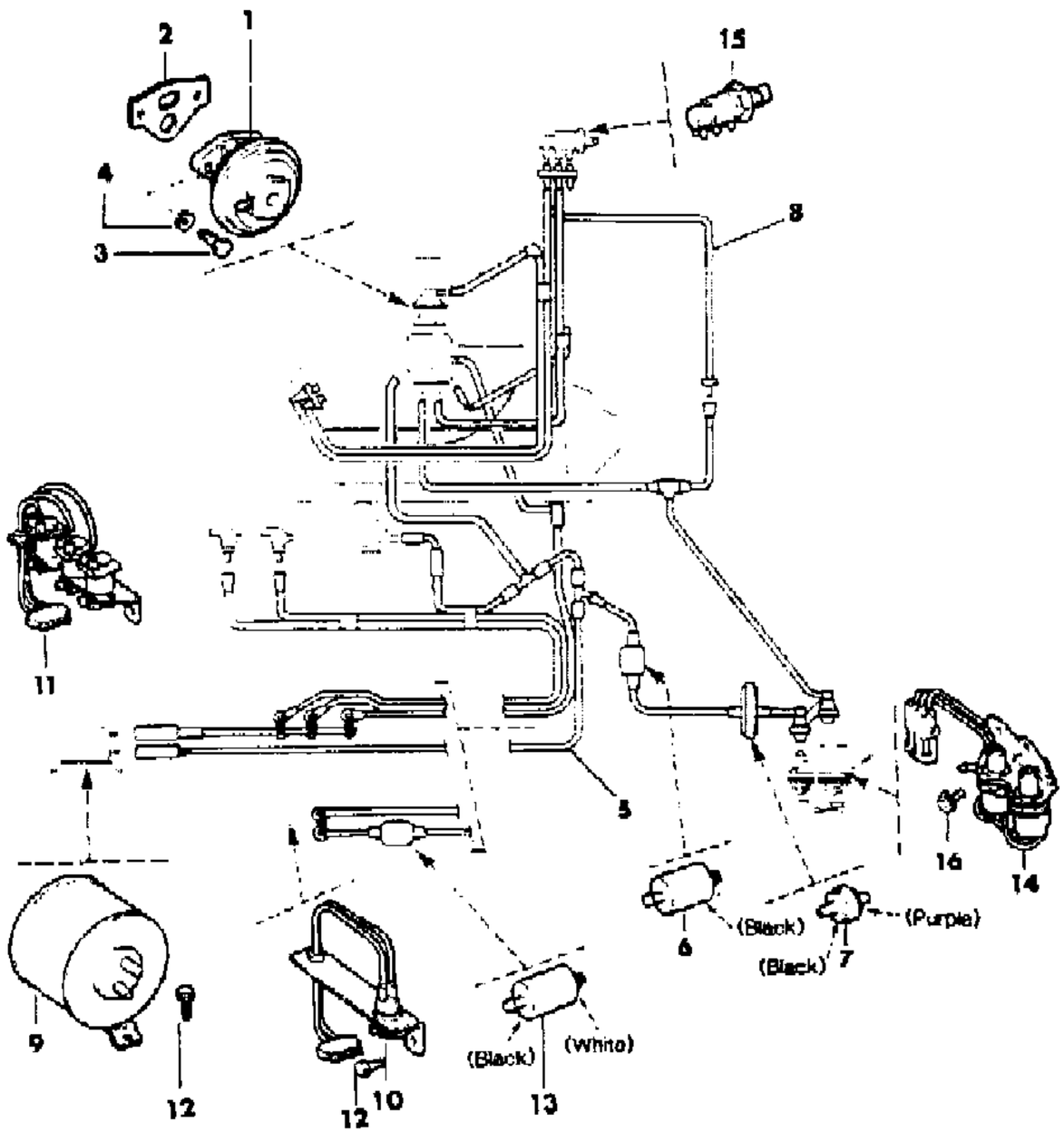

ITEM	PART NUMBER	QTY	BODY	MODEL	DESCRIPTION
1					VALVE, EGR
	5300 1090	1			US-49 States
	3300 1943	1			US-California, with Manual Transmission
	3300 1516	1			US-California, with Automatic Transmission
	5300 1089	1			High Altitude Operation, with Manual Transmission
	3300 1517	1			High Altitude Operation, with Automatic Transmission
	5300 1089	1			CANADA, with Manual Transmission
	5300 1090	1			CANADA, with Automatic Transmission
2	3300 4185	1			GASKET, EGR
3	J018 0078	2			BOLT
4	J012 0214	2			WASHER
5					HARNESS, Vacuum
	5300 2698	1			1984-85: US-49 States
	5300 2698	1			1984-85: High Altitude Operation
	5300 2698	1			1984-85: US-California, with Automatic Transmission
	3300 2168	1			1984: US-California, with Manual Transmission
	5300 0892	1			1984: CANADA
	5300 2699	1			1985: US-California, with Manual Transmission
	5300 2700	1			1985: CANADA
6	J323 9467	1			RESERVOIR, Vacuum
7	J323 6284	2			VALVE, Delay
8					HARNESS, Vacuum
	5300 0978	1			1984
	5300 2701	1			1985
	5300 1847	1			Non-Regulated Markets
9					RESERVOIR, Vacuum
	J323 2991	1			US-49 States
10					VALVE, Solenoid
	3300 1996	1			CANADA
11					VALVE, Solenoid
	3300 1995	1			US
12	1150 2453	4			SCREW
13					RESERVOIR, Vacuum
	J323 9603	1			CANADA ***
14	J324 0803	1			SWITCH, Emission
15	J323 8932	1			SWITCH, Vacuum
16	1150 4988	2			BOLT

MODEL CODES

16=Cherokee 2 Dr.(1981-83)
17=Cherokee 2 Dr.(1981-83)
73=Cherokee 2WD-2 Dr.(1984-86)
74=Cherokee 2WD-4 Dr.(1984-86)
18=Cherokee 4 Dr.(1981-83)
77=Cherokee 4WD-2 Dr.(1984-86)
78=Cherokee 4WD-4 Dr.(1984-86)
85=CJ-5 (1981-83)
86=CJ-6(1981)
87=CJ-7(1981-86)
88=CJ-8, Scrambler(1981-86)
64=Comanche 2WD-6 Ft. Box(1986)
66=Comanche 2WD-7 Ft. Box(1986)
63=Comanche 4WD-6 Ft. Box(1986)
65=Comanche 4WD-7 Ft. Box(1986)
15=Grand Wagoneer 4 Dr.(1984-86)
25=J-10 Truck 7 Ft. Box(1981-84)
26=J10 Truck 8 Ft. Box(1981-86)
27=J-20 Truck 8 Ft. Box(1981-86)
15=Wagoneer 4 Dr.(1981-83)
75=Wagoneer 4WD-4 Dr.(1984-86)

BODY
CJ=CJ-5, CJ-6, CJ-7, CJ-8, Scrambler(1981-86)
MJ=Comanche Pickup(1986)

STYLES
SJ=Wagoneer(1981-83), Grand Wagoneer(1984-86), Cherokee(1981-83), J-10, J-20(1981-86)
XJ=Wagoneer(1984-86), Cherokee(1984-86)

AR = Use as Required - = Non Illustrated Part P.A.R. = Paint as Required

« RETURN TO GROUP INDEX

EMISSION CONTROLS 1986 FOUR CYLINDER, GAS, INJECTED XJ CHEROKEE, XJ WAGONEER, COMANCHE
Figure 25-1300

81J25 1300

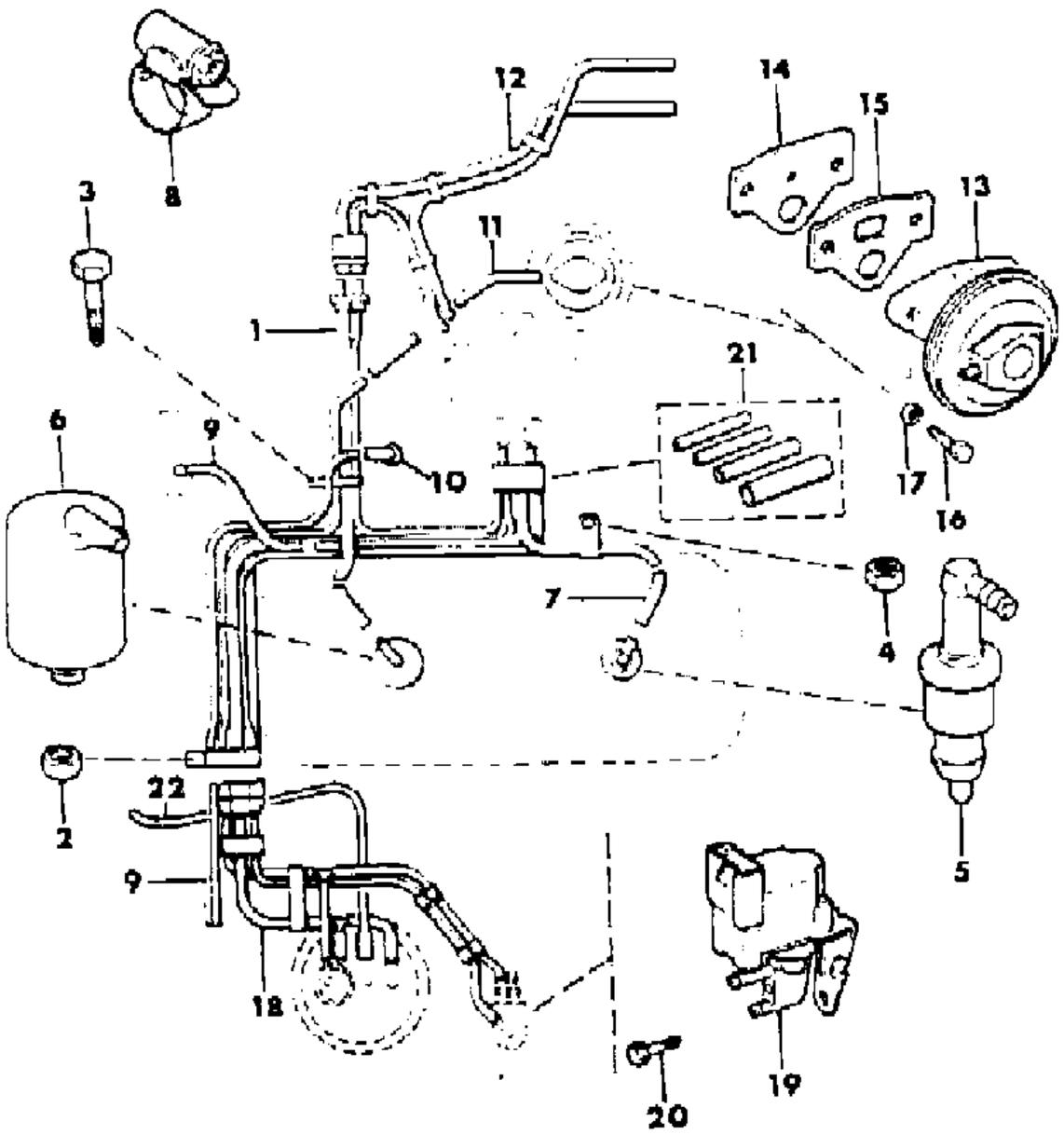

ITEM	PART NUMBER	QTY	BODY	MODEL	DESCRIPTION
1	8350 2725	1			TUBE ASSEMBLY, Vacuum ***
2	J027 1172	1			NUT, Hex
3	S017 9814	1			SCREW
4	J027 1184	1			NUT, Hex
5	J813 2309	1			VALVE, PCV
6	5300 2466	1			FILTER, Ventilation Valve
7	8350 2726	2			HOSE, Vacuum
8	3300 0785	4			CLAMP, Hose
9	8330 0080	AR			HOSE, Vacuum
10	5300 3944	1			HOSE, Vacuum
11	J812 5995	AR			HOSE, Vacuum
12	5300 2481	1			HARNESS, Vacuum
13	5300 2483	1			VALVE, EGR
14	5300 3898	1			PLATE, Restrictor
15	3300 4185	2			GASKET
16	J018 0078	2			BOLT
17	J012 0214	2			WASHER, Lock
18	5300 2482	1			HARNESS, Emission
19	3300 2298	1			SOLENOID, Vacuum Switch
20	J942 1073	1			SCREW
21	8350 3498	1			HOSE PACKAGE ***
22	3300 0058	1			HOSE, Vent

MODEL CODES

16=Cherokee 2 Dr.(1981-83)
17=Cherokee 2 Dr.(1981-83)
73=Cherokee 2WD-2 Dr.(1984-86)
74=Cherokee 2WD-4 Dr.(1984-86)
18=Cherokee 4 Dr.(1981-83)
77=Cherokee 4WD-2 Dr.(1984-86)
78=Cherokee 4WD-4 Dr.(1984-86)
85=CJ-5 (1981-83)
86=CJ-6(1981)
87=CJ-7(1981-86)
88=CJ-8, Scrambler(1981-86)
64=Comanche 2WD-6 Ft. Box(1986)
66=Comanche 2WD-7 Ft. Box(1986)
63=Comanche 4WD-6 Ft. Box(1986)
65=Comanche 4WD-7 Ft. Box(1986)
15=Grand Wagoneer 4 Dr.(1984-86)
25=J-10 Truck 7 Ft. Box(1981-84)
26=J10 Truck 8 Ft. Box(1981-86)
27=J-20 Truck 8 Ft. Box(1981-86)
15=Wagoneer 4 Dr.(1981-83)
75=Wagoneer 4WD-4 Dr.(1984-86)

BODY
CJ=CJ-5, CJ-6, CJ-7, CJ-8, Scrambler(1981-86)
MJ=Comanche Pickup(1986)

STYLES
SJ=Wagoneer(1981-83), Grand Wagoneer(1984-86), Cherokee(1981-83), J-10, J-20(1981-86)
XJ=Wagoneer(1984-86), Cherokee(1984-86)

AR = Use as Required - = Non Illustrated Part P.A.R. = Paint as Required

« RETURN TO GROUP INDEX

EMISSION CONTROLS 1984 SIX CYLINDER (V6) XJ CHEROKEE, XJ WAGONEER
Figure 25-1400

81J25 1400

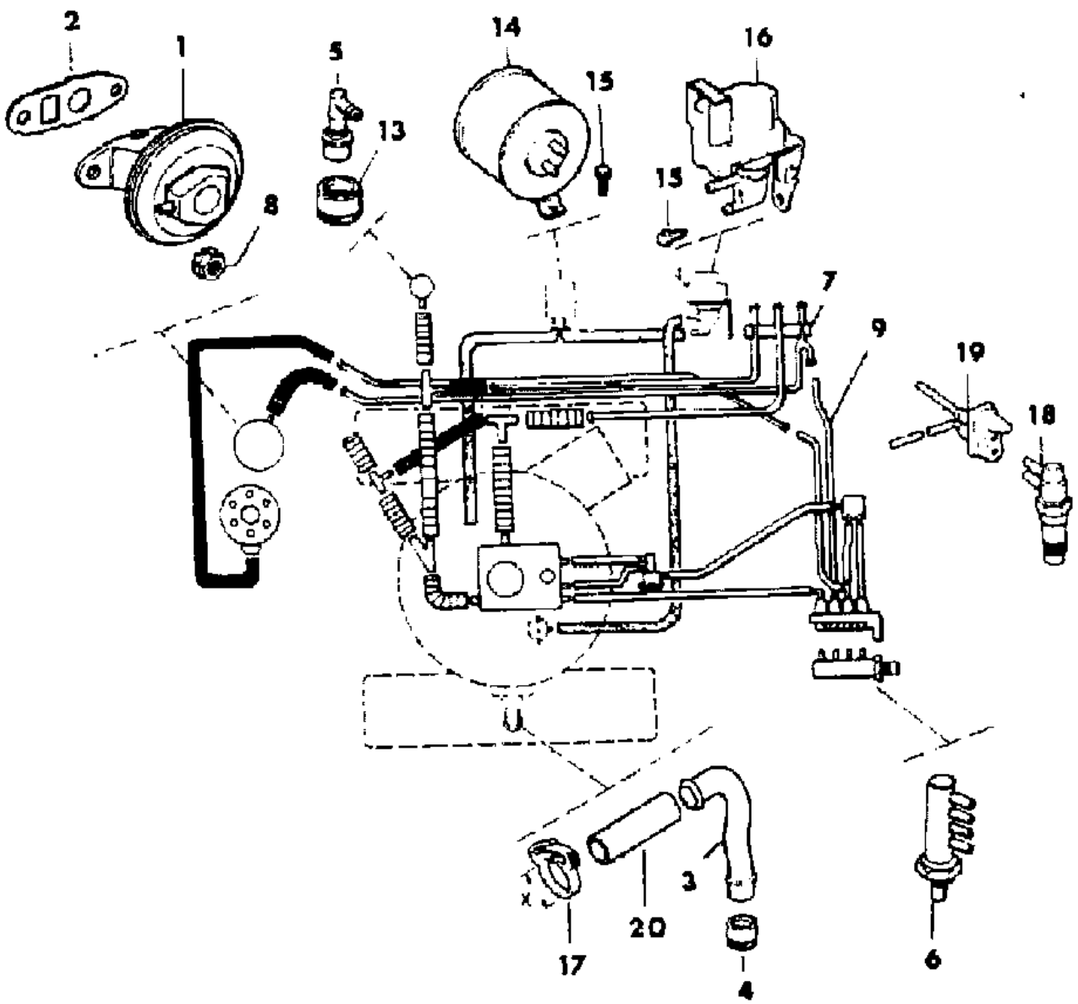

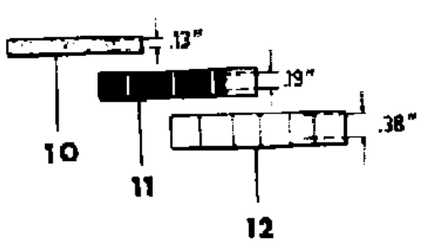

ITEM	PART NUMBER	QTY	BODY	MODEL	DESCRIPTION
1					VALVE, EGR
	3300 1550	1			With Manual Transmission
	3300 1636	1			Without US-California, with Automatic Transmission
	3300 2105	1			US-California, with Automatic Transmission
2	J323 7589	1			GASKET, EGR
3	3300 1753	1			TUBE
4	5300 0957	1			GROMMET
5	5300 0960	1			VALVE, PCV
6					SWITCH, Vacuum
	3300 1131	1			US-49 States, CANADA
	3300 1131	1			Non-Regulated Markets
7					TUBE ASSEMBLY, Vacuum ***
	3300 2156	1			Without US-California, with Manual Transmission
	3300 2155	1			Without US-California, with Automatic Transmission
	3300 2157	1			US-California
8	1150 1889	2			NUT
9					HARNESS, Emissions
	3300 1133	1			With Manual Transmission
	3300 1132	1			US-49 States, with High Altitude Operation, with Automatic Transmission
	3300 1133	1			CANADA: With Automatic Transmission
	3300 1133	1			Non-Regulated Markets
10	J812 5810	AR			HOSE
11	J812 5812	AR			HOSE
12	J812 5781	AR			HOSE
13	8350 0832	1			GROMMET
14	J323 2991	1			RESERVOIR, Vacuum
15	1150 2453	AR			SCREW
16	3300 0896	1			SWITCH, Vacuum
17					CLAMP
	J400 6819	2			1.14" Thru 1.98"
18					SWITCH, Vacuum
	3300 1137	1			US-California, with Automatic Transmission
19					HARNESS, Emissions
	3300 1138	1			US-California, with Automatic Transmission
20	J323 4424	1			HOSE (Modification Required) ***

MODEL CODES

16=Cherokee 2 Dr.(1981-83)
17=Cherokee 2 Dr.(1981-83)
73=Cherokee 2WD-2 Dr.(1984-86)
74=Cherokee 2WD-4 Dr.(1984-86)
18=Cherokee 4 Dr.(1981-83)
77=Cherokee 4WD-2 Dr.(1984-86)
78=Cherokee 4WD-4 Dr.(1984-86)
85=CJ-5 (1981-83)
86=CJ-6(1981)
87=CJ-7(1981-86)
88=CJ-8, Scrambler(1981-86)
64=Comanche 2WD-6 Ft. Box(1986)
66=Comanche 2WD-7 Ft. Box(1986)
63=Comanche 4WD-6 Ft. Box(1986)
65=Comanche 4WD-7 Ft. Box(1986)
15=Grand Wagoneer 4 Dr.(1984-86)
25=J-10 Truck 7 Ft. Box(1981-84)
26=J10 Truck 8 Ft. Box(1981-86)
27=J-20 Truck 8 Ft. Box(1981-86)
15=Wagoneer 4 Dr.(1981-83)
75=Wagoneer 4WD-4 Dr.(1984-86)

BODY
CJ=CJ-5, CJ-6, CJ-7, CJ-8, Scrambler(1981-86)
MJ=Comanche Pickup(1986)

STYLES
SJ=Wagoneer(1981-83), Grand Wagoneer(1984-86), Cherokee(1981-83), J-10, J-20(1981-86)
XJ=Wagoneer(1984-86), Cherokee(1984-86)

AR = Use as Required - = Non Illustrated Part P.A.R. = Paint as Required

« RETURN TO GROUP INDEX

EMISSION CONTROLS 1985-86 SIX CYLINDER (V6) XJ CHEROKEE, XJ WAGONEER, COMANCHE
Figure 25-1500

81J25 1500

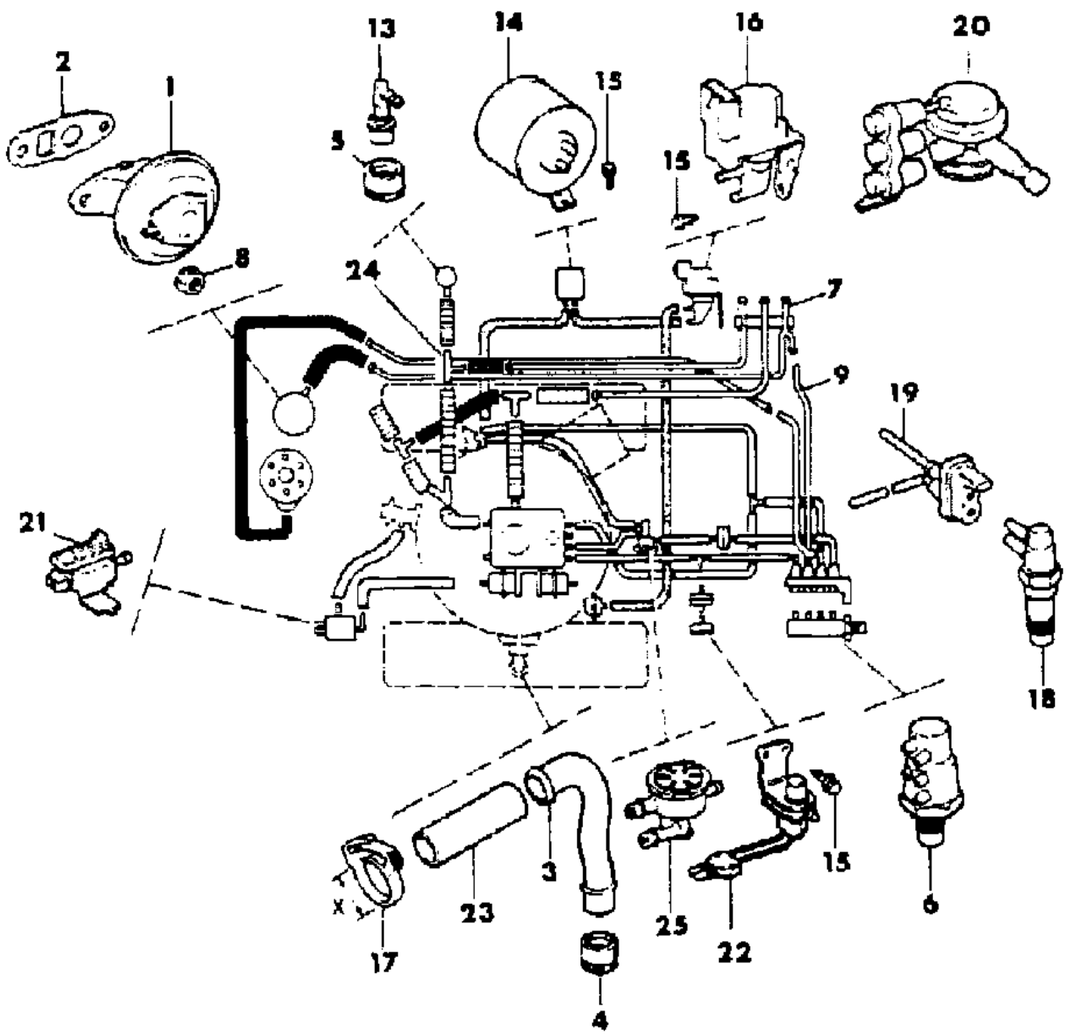

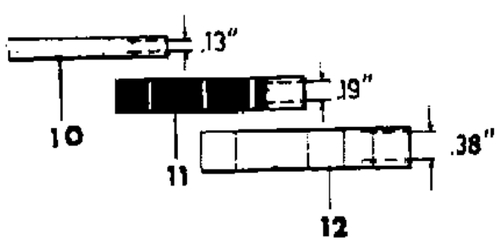

ITEM	PART NUMBER	QTY	BODY	MODEL	DESCRIPTION
1					VALVE
	5300 2647	1			US-49 States, CANADA, High Altitude Operation, Non-Regulated Markets
	3300 1636	1			US-California, with Manual Transmission
	3300 2105	1			US-California, with Automatic Transmission
	5300 2874	1			Sweden, Switzerland
	3300 1550	1			Economic Commission of Europe, with Manual Transmission
	3300 1636	1			Economic Commission of Europe, with Automatic Transmission
2	J323 7589	1			GASKET, EGR
3	3300 1753	1			TUBE
4	5300 0957	1			GROMMET
5	8350 0832	1			GROMMET
6					SWITCH, Vacuum
	J324 1784	1			
	5300 3010	1			Economic Commission of Europe
7					TUBE ASSEMBLY, Vacuum ***
	3300 2156	1			Without US-California, with Manual Transmission
	3300 2155	1			Without US-California, with Automatic Transmission
	3300 2157	1			US-California
8	1150 1889	2			NUT
9					HARNESS, Emissions
	5300 2695	1			US-49 States, with High Altitude Operation, with Manual Transmission
	5300 2694	1			US-49 States, with High Altitude Operation, with Automatic Transmission
	5300 2694	1			CANADA, Non-Regulated Markets
	3300 1133	1			Economic Commission of Europe, with Manual Transmission
	3300 1132	1			Economic Commission of Europe, with Automatic Transmission
	5300 2729	1			Sweden, Switzerland
10	J812 5810	AR			HOSE
11	J812 5812	AR			HOSE
12	J812 5781	AR			HOSE
13	5300 0960	1			VALVE, PCV
14	J323 2991	1			RESERVOIR, Vacuum
15	1150 2453	AR			SCREW
16	3300 0896	1			SWITCH, Vacuum
17	J400 6819	2			CLAMP
18					SWITCH, Vacuum
	3300 1137	1			US-California, Japan, with Automatic Transmission

MODEL CODES

16=Cherokee 2 Dr.(1981-83)
17=Cherokee 2 Dr.(1981-83)
73=Cherokee 2WD-2 Dr.(1984-86)
74=Cherokee 2WD-4 Dr.(1984-86)
18=Cherokee 4 Dr.(1981-83)
77=Cherokee 4WD-2 Dr.(1984-86)
78=Cherokee 4WD-4 Dr.(1984-86)
85=CJ-5 (1981-83)
86=CJ-6(1981)
87=CJ-7(1981-86)
88=CJ-8, Scrambler(1981-86)
64=Comanche 2WD-6 Ft. Box(1986)
66=Comanche 2WD-7 Ft. Box(1986)
63=Comanche 4WD-6 Ft. Box(1986)
65=Comanche 4WD-7 Ft. Box(1986)
15=Grand Wagoneer 4 Dr.(1984-86)
25=J-10 Truck 7 Ft. Box(1981-84)
26=J10 Truck 8 Ft. Box(1981-86)
27=J-20 Truck 8 Ft. Box(1981-86)
15=Wagoneer 4 Dr.(1981-83)
75=Wagoneer 4WD-4 Dr.(1984-86)

BODY
CJ=CJ-5, CJ-6, CJ-7, CJ-8, Scrambler(1981-86)
MJ=Comanche Pickup(1986)

STYLES
SJ=Wagoneer(1981-83), Grand Wagoneer(1984-86), Cherokee(1981-83), J-10, J-20(1981-86)
XJ=Wagoneer(1984-86), Cherokee(1984-86)

AR = Use as Required - = Non Illustrated Part P.A.R. = Paint as Required

81J25 1500

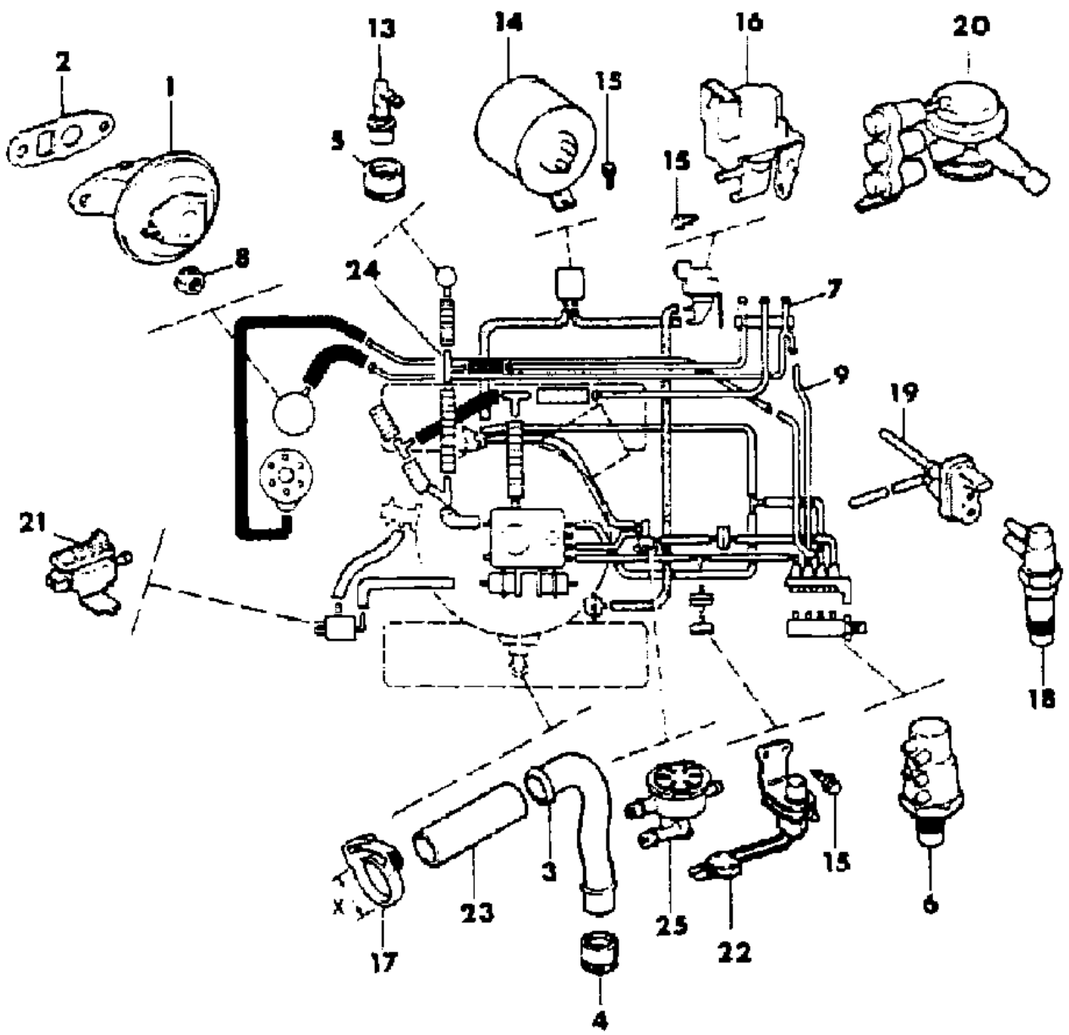

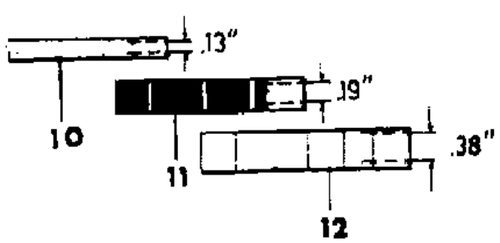

ITEM	PART NUMBER	QTY	BODY	MODEL	DESCRIPTION
19					HARNESS, Emissions
	3300 1138	1			US-California, with Automatic Transmission
20					VALVE ASSEMBLY, Bowl Vent
	5300 2728	1			Economic Commission of Europe, Sweden, Switzerland
21					SOLENOID, Vacuum Switch
	5300 2465	1			US-49 States, CANADA, Non-Regulated Markets
22					SWITCH, Vacuum
	5300 2776	1			US-49 States, High Altitude Operation, with Manual Transmission
23					HOSE
	J323 4424	1			HOSE (Modification Required) ***
24	J323 9686	1			TEE
25	3300 2154	1			VALVE, Non-Linear

MODEL CODES
16=Cherokee 2 Dr.(1981-83)
17=Cherokee 2 Dr.(1981-83)
73=Cherokee 2WD-2 Dr.(1984-86)
74=Cherokee 2WD-4 Dr.(1984-86)
18=Cherokee 4 Dr.(1981-83)
77=Cherokee 4WD-2 Dr.(1984-86)
78=Cherokee 4WD-4 Dr.(1984-86)
85=CJ-5 (1981-83)
86=CJ-6(1981)
87=CJ-7(1981-86)
88=CJ-8, Scrambler(1981-86)
64=Comanche 2WD-6 Ft. Box(1986)
66=Comanche 2WD-7 Ft. Box(1986)
63=Comanche 4WD-6 Ft. Box(1986)
65=Comanche 4WD-7 Ft. Box(1986)
15=Grand Wagoneer 4 Dr.(1984-86)
25=J-10 Truck 7 Ft. Box(1981-84)
26=J10 Truck 8 Ft. Box(1981-86)
27=J-20 Truck 8 Ft. Box(1981-86)
15=Wagoneer 4 Dr.(1981-83)
75=Wagoneer 4WD-4 Dr.(1984-86)

BODY
CJ=CJ-5, CJ-6, CJ-7, CJ-8, Scrambler(1981-86)
MJ=Comanche Pickup(1986)

STYLES
SJ=Wagoneer(1981-83), Grand Wagoneer(1984-86), Cherokee(1981-83), J-10, J-20(1981-86)
XJ=Wagoneer(1984-86), Cherokee(1984-86)

AR = Use as Required - = Non Illustrated Part P.A.R. = Paint as Required

EMISSION CONTROL VACUUM HARNESS SIX CYLINDER SJ CHEROKEE, SJ WAGONEER, J10, J20
Figure 25-1600

81J25 1600

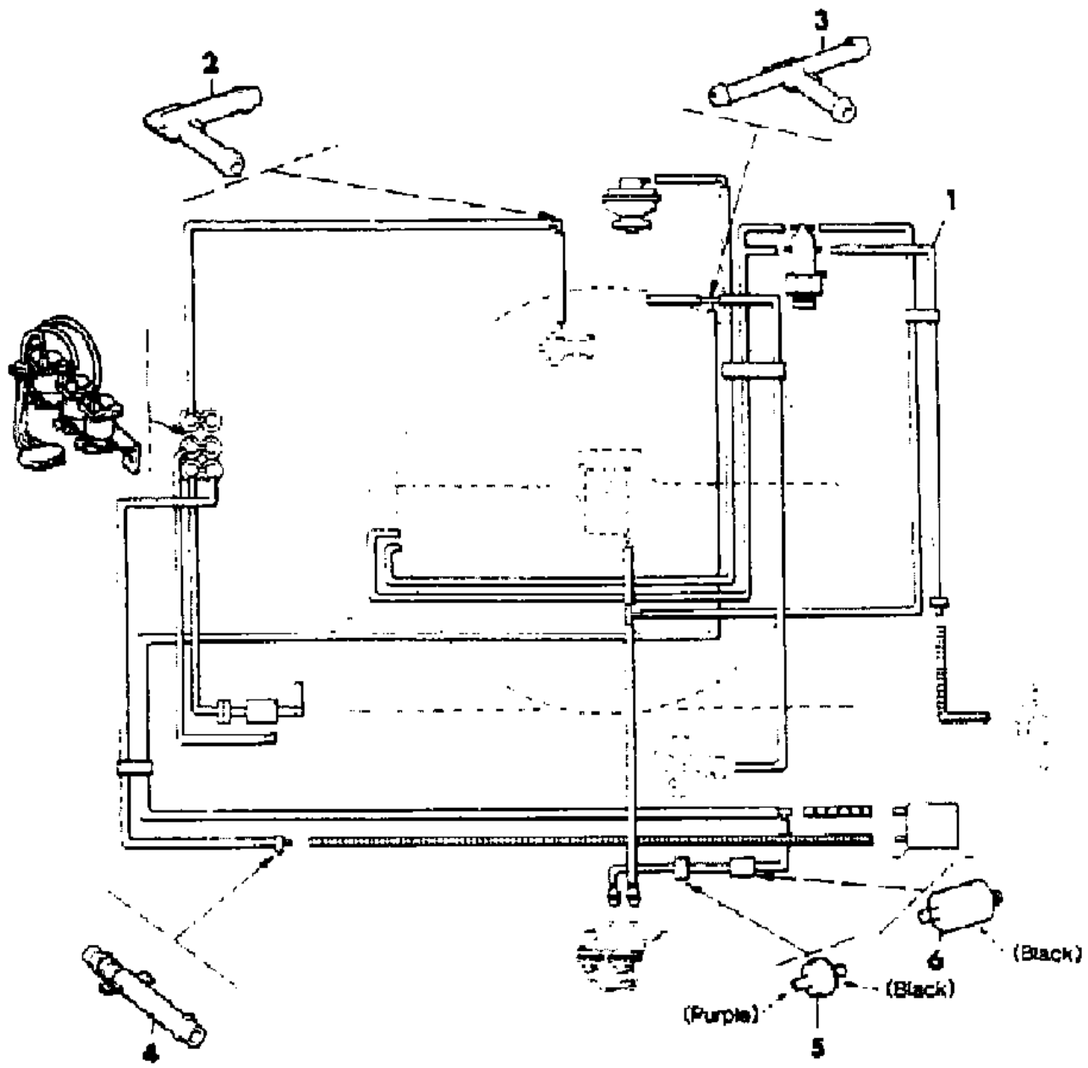

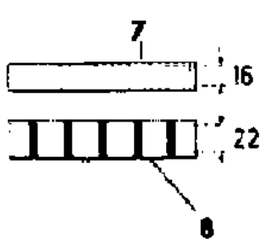

ITEM	PART NUMBER	QTY	BODY	MODEL	DESCRIPTION
1					HARNESS, Vacuum
					With Manual Transmission
	J324 0376	1			1981: Without US-California, without Heavy Duty Cooling, Identified CR
	J324 0561	1			1981: Without US-California, with Heavy Duty Cooling, Identified CS
	J324 0374	1			1981: US-California, without Heavy Duty Cooling, Identified CB
	J324 0605	1			1981: US-California, with Heavy Duty Cooling, Identified CT
	J324 0371	1			1981: Without US-California, without Heavy Duty Cooling, without Hilly Terrain, Identified CG
	J324 0369	1			Without US-California, with Heavy Duty Cooling, without Hilly Terrain, Identified CE
	J324 0751	1			1981: CANADA, without Heavy Duty Cooling, Identified EH
	J324 0752	1			CANADA, with Heavy Duty Cooling, Identified EF
	J324 0752	1		15,16,1	1981: EXPORT, with Heavy Duty Cooling, Non-Regulated Markets, Identified EF
	J324 0752	1		25,26	1981: EXPORT, with Heavy Duty Cooling, Non-Regulated Markets, Identified EF
	J324 0751	1		15,16,1	1981: EXPORT, without Heavy Duty Cooling, Non-Regulated Markets, Identified EH
	J324 0751	1		25,26	1981: EXPORT, without Heavy Duty Cooling, Non-Regulated Markets, Identified EH
	J324 1192	1		15,16,1	1981: EXPORT, without Heavy Duty Cooling, Australian Design Rules
	J324 1192	1		27	1981: EXPORT, without Heavy Duty Cooling, Australian Design Rules
	J324 1194	1		15,16,1	1981: EXPORT, with Heavy Duty Cooling, Australian Design Rules
	J324 1194	1		27	1981: EXPORT, with Heavy Duty Cooling, Australian Design Rules
	J324 2045	1			1982: Without US-California, without Hilly Terrain
	J324 2046	1			1982: Without US-California, with Hilly Terrain
	J324 2030	1			1982: US-California, with Heavy Duty Cooling
	J324 2075	1			1982: CANADA
	J324 2149	1			1982: EXPORT, without Heavy Duty Cooling, Non-Regulated Markets
	J324 2150	1			1982: EXPORT, with Heavy Duty Cooling, Non-Regulated Markets

MODEL CODES

16=Cherokee 2 Dr.(1981-83)	78=Cherokee 4WD-4 Dr.(1984-86)	64=Comanche 2WD-6 Ft. Box(1986)	25=J-10 Truck 7 Ft. Box(1981-84)
17=Cherokee 2 Dr.(1981-83)	85=CJ-5 (1981-83)	66=Comanche 2WD-7 Ft. Box(1986)	26=J10 Truck 8 Ft. Box(1981-86)
73=Cherokee 2WD-2 Dr.(1984-86)	86=CJ-6(1981)	63=Comanche 4WD-6 Ft. Box(1986)	27=J-20 Truck 8 Ft. Box(1981-86)
74=Cherokee 2WD-4 Dr.(1984-86)	87=CJ-7(1981-86)	65=Comanche 4WD-7 Ft. Box(1986)	15=Wagoneer 4 Dr.(1981-83)
18=Cherokee 4 Dr.(1981-83)	88=CJ-8, Scrambler(1981-86)	15=Grand Wagoneer 4 Dr.(1984-86)	75=Wagoneer 4WD-4 Dr.(1984-86)
77=Cherokee 4WD-2 Dr.(1984-86)			

BODY
CJ=CJ-5, CJ-6, CJ-7, CJ-8, Scrambler(1981-86)
MJ=Comanche Pickup(1986)

STYLES
SJ=Wagoneer(1981-83), Grand Wagoneer(1984-86), Cherokee(1981-83), J-10, J-20(1981-86)
XJ=Wagoneer(1984-86), Cherokee(1984-86)

AR = Use as Required - = Non Illustrated Part P.A.R. = Paint as Required

EMISSION CONTROL VACUUM HARNESS SIX CYLINDER SJ CHEROKEE, SJ WAGONEER, J10, J20
Figure 25-1600

81J25 1600

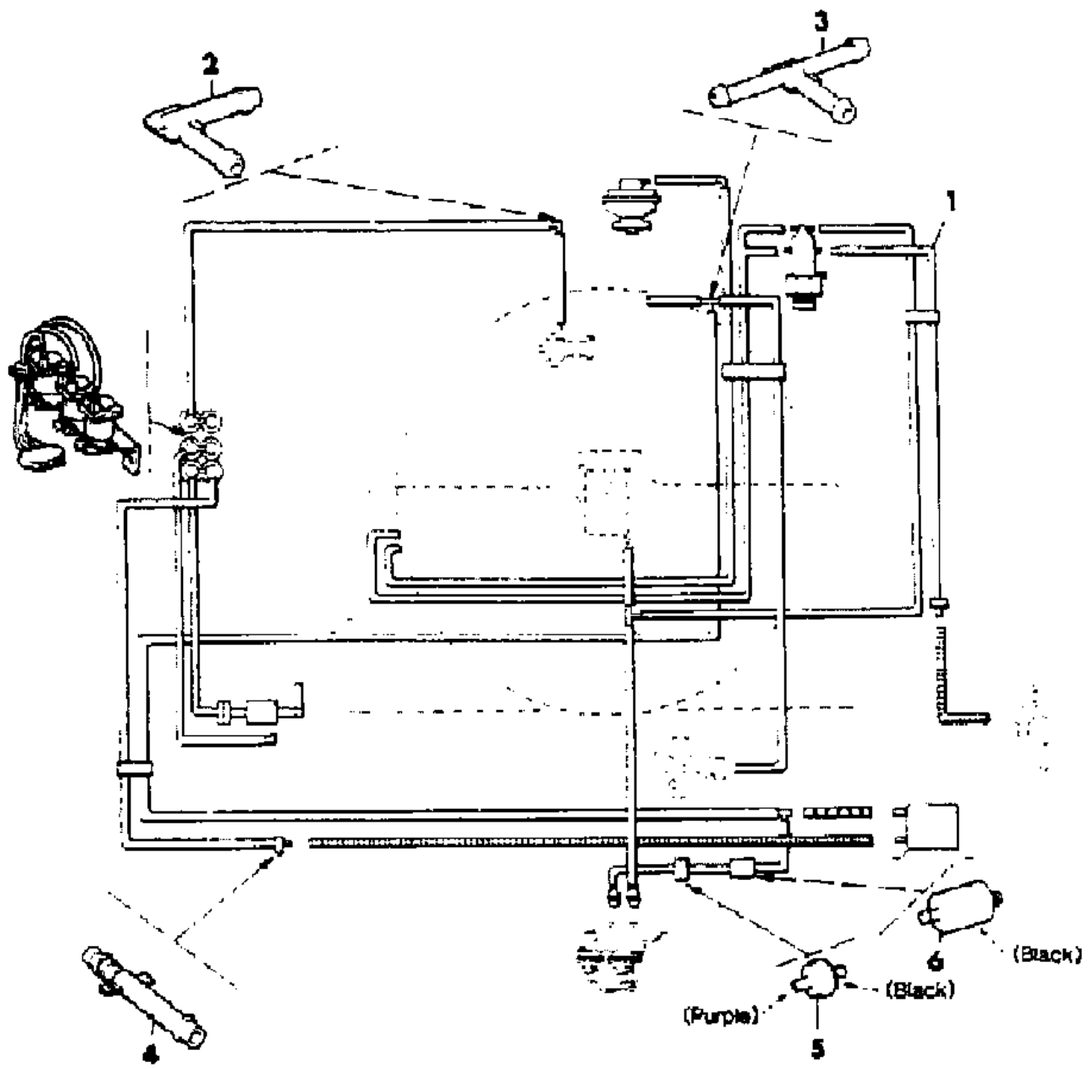

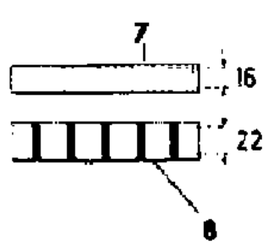

ITEM	PART NUMBER	QTY	BODY	MODEL	DESCRIPTION
	J324 2090	1		16,17,1	1982: EXPORT, without Heavy Duty Cooling, Australian Design Rules
	J324 2092	1		16,17,1	1982: EXPORT, with Heavy Duty Cooling, Australian Design Rules
	3300 1031	1			1983-84: US-California
	J805 1796	1			1983-86: EXPORT, VAM, Engine Built in Mexico, Engine Build Code "M", with Heavy Duty Cooling, Non-Regulated Markets
	5300 1937	1			US-California
	3300 2075	1			1984-86: Without US-California, with High Altitude Operation
	5300 2116	1			1984-86: Without US-California, with High Altitude Operation
	J324 2291	1		15,27	1984-85: EXPORT, without Heavy Duty Cooling, Australian Design Rules
	J324 2286	1		15,27	1984-85: EXPORT, with Heavy Duty Cooling, Australian Design Rules
					With Automatic Transmission
	J324 0386	1			1981: US-California, without Heavy Duty Cooling, Identified CF
	J324 0367	1			1981: Without US-California, without Heavy Duty Cooling, Identified CN
	J324 0380	1			1981: Without US California, with Heavy Duty Cooling, Identified CC
	J324 0604	1			1981: US-California, with Heavy Duty Cooling, Identified CV
	J324 0474	1			1981: CANADA, without Heavy Duty Cooling, Identified AL
	J324 0475	1			1981: CANADA, with Heavy Duty Cooling, Identified AM
	J324 0475	1		15,16,1	1981: EXPORT, with Heavy Duty Cooling, Non-Regulated Markets, Identified AM
	J324 0475	1		25,26	1981: EXPORT, with Heavy Duty Cooling, Non-Regulated Markets, Identified AM
	J324 0474	1		15,16,1	1981: EXPORT, without Heavy Duty Cooling, Non-Regulated Markets, Identified AL
	J324 0474	1		25,26	1981: EXPORT, without Heavy Duty Cooling, Non-Regulated Markets, Identified AL
	J324 2046	1			1982
	J324 2074	1			1982: CANADA
	J324 2147	1		15,16,1	1982: EXPORT, without Heavy Duty Cooling, Non-Regulated Markets
	J324 2147	1		25,26	1982: EXPORT, without Heavy Duty Cooling, Non-Regulated Markets
	J324 2148	1		15,16,1	1982: EXPORT, with Heavy Duty Cooling, Non-Regulated Markets

MODEL CODES
16=Cherokee 2 Dr.(1981-83)
17=Cherokee 2 Dr.(1981-83)
73=Cherokee 2WD-2 Dr.(1984-86)
74=Cherokee 2WD-4 Dr.(1984-86)
18=Cherokee 4 Dr.(1981-83)
77=Cherokee 4WD-2 Dr.(1984-86)
78=Cherokee 4WD-4 Dr.(1984-86)
85=CJ-5 (1981-83)
86=CJ-6(1981)
87=CJ-7(1981-86)
88=CJ-8, Scrambler(1981-86)
64=Comanche 2WD-6 Ft. Box(1986)
66=Comanche 2WD-7 Ft. Box(1986)
63=Comanche 4WD-6 Ft. Box(1986)
65=Comanche 4WD-7 Ft. Box(1986)
15=Grand Wagoneer 4 Dr.(1984-86)
25=J-10 Truck 7 Ft. Box(1981-84)
26=J10 Truck 8 Ft. Box(1981-86)
27=J-20 Truck 8 Ft. Box(1981-86)
15=Wagoneer 4 Dr.(1981-83)
75=Wagoneer 4WD-4 Dr.(1984-86)

BODY
CJ=CJ-5, CJ-6, CJ-7, CJ-8, Scrambler(1981-86)
MJ=Comanche Pickup(1986)

STYLES
SJ=Wagoneer(1981-83), Grand Wagoneer(1984-86), Cherokee(1981-83), J-10, J-20(1981-86)
XJ=Wagoneer(1984-86), Cherokee(1984-86)

AR = Use as Required - = Non Illustrated Part P.A.R. = Paint as Required

EMISSION CONTROL VACUUM HARNESS SIX CYLINDER SJ CHEROKEE, SJ WAGONEER, J10, J20
Figure 25-1600

81J25 1600

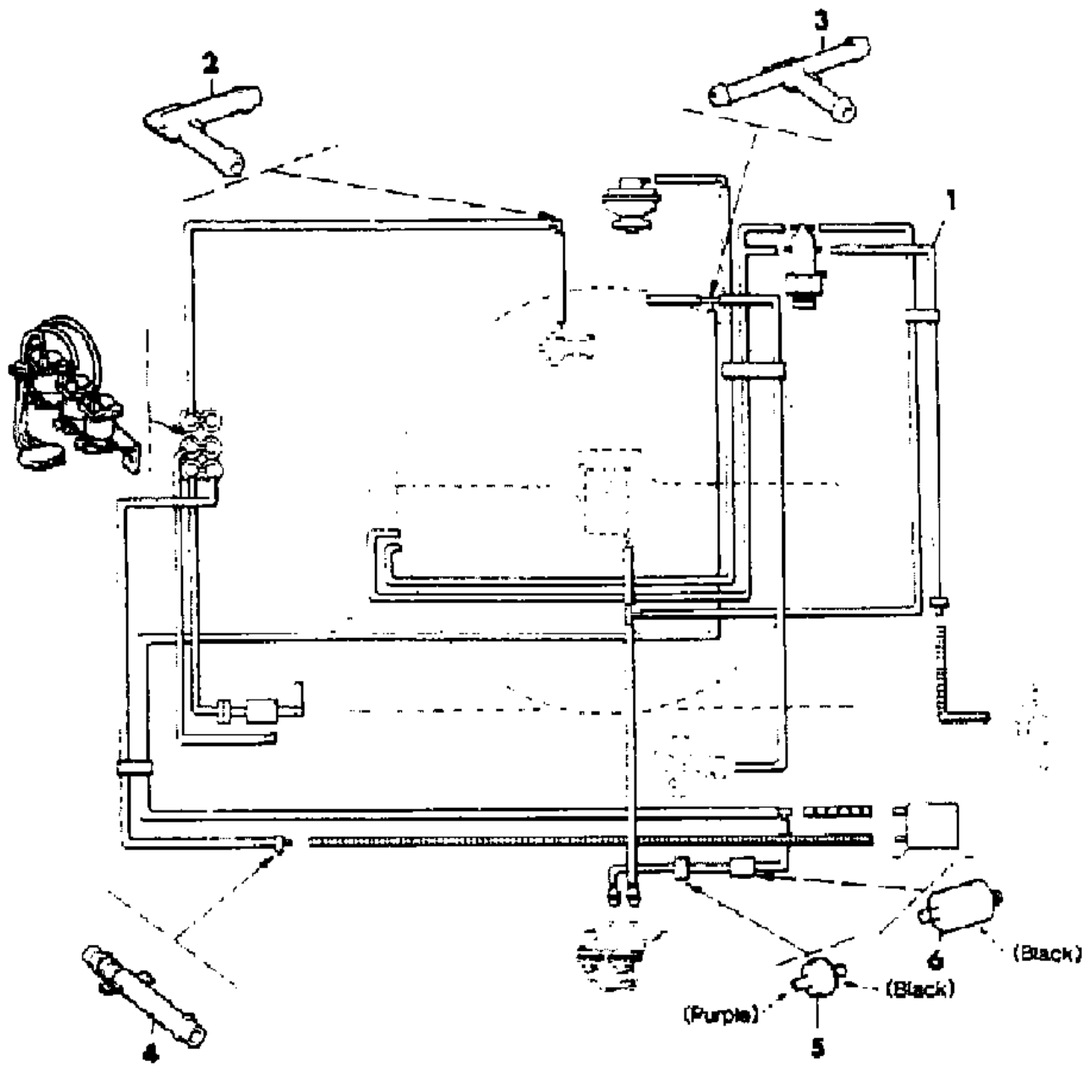

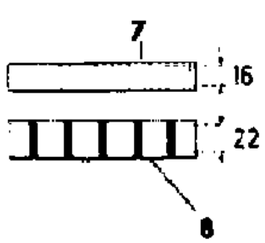

ITEM	PART NUMBER	QTY	BODY	MODEL	DESCRIPTION
	J324 2148	1		25,26	1982: EXPORT, with Heavy Duty Cooling, Non-Regulated Markets
	3300 1030	1			1983: US-California
	3300 1506	1			1983: US-California
	J805 1841	1			1983-86: EXPORT, VAM, Engine Built in Mexico, Engine Build Code "M", without Heavy Duty Cooling, Non-Regulated Markets
	J805 1840	1			1983-86: EXPORT, VAM, Engine Built in Mexico, Engine Build Code "M", with Heavy Duty Cooling, Non-Regulated Markets
	3300 2079	1			1984: US-California
	3300 1938	1			1984-86: US-California
	5300 2116	1			1984-86: Without US-California
	3300 1722	1		15	1985: EXPORT, Australian Design Rules
					With Manual or Automatic Transmission
	J324 0764	1			1981: EXPORT, with Heavy Duty Cooling, Economic Commission of Europe, Identified ES
	J324 0763	1			1981: EXPORT, without Heavy Duty Cooling, Economic Commission of Europe, Identified EP
	J324 2261	1		15,16,1	1982-85: EXPORT, without Heavy Duty Cooling, Economic Commission of Europe
	J324 2261	1		25,26	1982-85: EXPORT, without Heavy Duty Cooling, Economic Commission of Europe
	J324 2262	1		15,16,1	1982-85: EXPORT, with Heavy Duty Cooling, Economic Commission of Europe
	J324 2262	1			1982-85: EXPORT, with Heavy Duty Cooling, Economic Commission of Europe
	5300 0429	1			1983: Without US-California
	5300 0433	1			1983-86: CANADA
	5300 0427	1			1983-86: Without Heavy Duty Cooling, Non-Regulated Markets
	5300 0426	1			1983-86: With Heavy Duty Cooling, Non-Regulated Markets
2	3300 0538	AR			ELBOW, 90 Degree
3	J323 9827	AR			CONNECTOR, Tee
4	3300 0537	AR			CONNECTOR
5	J323 6284	AR			VALVE, Delay
6	J323 9467	AR			RESERVOIR, Vacuum
7	8330 0079	AR			HOSE, Bulk
8	8350 1904	AR			HOSE, Bulk

MODEL CODES
16=Cherokee 2 Dr.(1981-83)
17=Cherokee 2 Dr.(1981-83)
73=Cherokee 2WD-2 Dr.(1984-86)
74=Cherokee 2WD-4 Dr.(1984-86)
18=Cherokee 4 Dr.(1981-83)
77=Cherokee 4WD-2 Dr.(1984-86)
78=Cherokee 4WD-4 Dr.(1984-86)
85=CJ-5 (1981-83)
86=CJ-6(1981)
87=CJ-7(1981-86)
88=CJ-8, Scrambler(1981-86)
64=Comanche 2WD-6 Ft. Box(1986)
66=Comanche 2WD-7 Ft. Box(1986)
63=Comanche 4WD-6 Ft. Box(1986)
65=Comanche 4WD-7 Ft. Box(1986)
15=Grand Wagoneer 4 Dr.(1984-86)
25=J-10 Truck 7 Ft. Box(1981-84)
26=J10 Truck 8 Ft. Box(1981-86)
27=J-20 Truck 8 Ft. Box(1981-86)
15=Wagoneer 4 Dr.(1981-83)
75=Wagoneer 4WD-4 Dr.(1984-86)

BODY
CJ=CJ-5, CJ-6, CJ-7, CJ-8, Scrambler(1981-86)
MJ=Comanche Pickup(1986)

STYLES
SJ=Wagoneer(1981-83), Grand Wagoneer(1984-86), Cherokee(1981-83), J-10, J-20(1981-86)
XJ=Wagoneer(1984-86), Cherokee(1984-86)

AR = Use as Required - = Non Illustrated Part P.A.R. = Paint as Required

« RETURN TO GROUP INDEX

EMISSION CONTROL COMPONENTS SIX CYLINDER SJ CHEROKEE, SJ WAGONEER, J10, J20
Figure 25-1700

81J25 1700

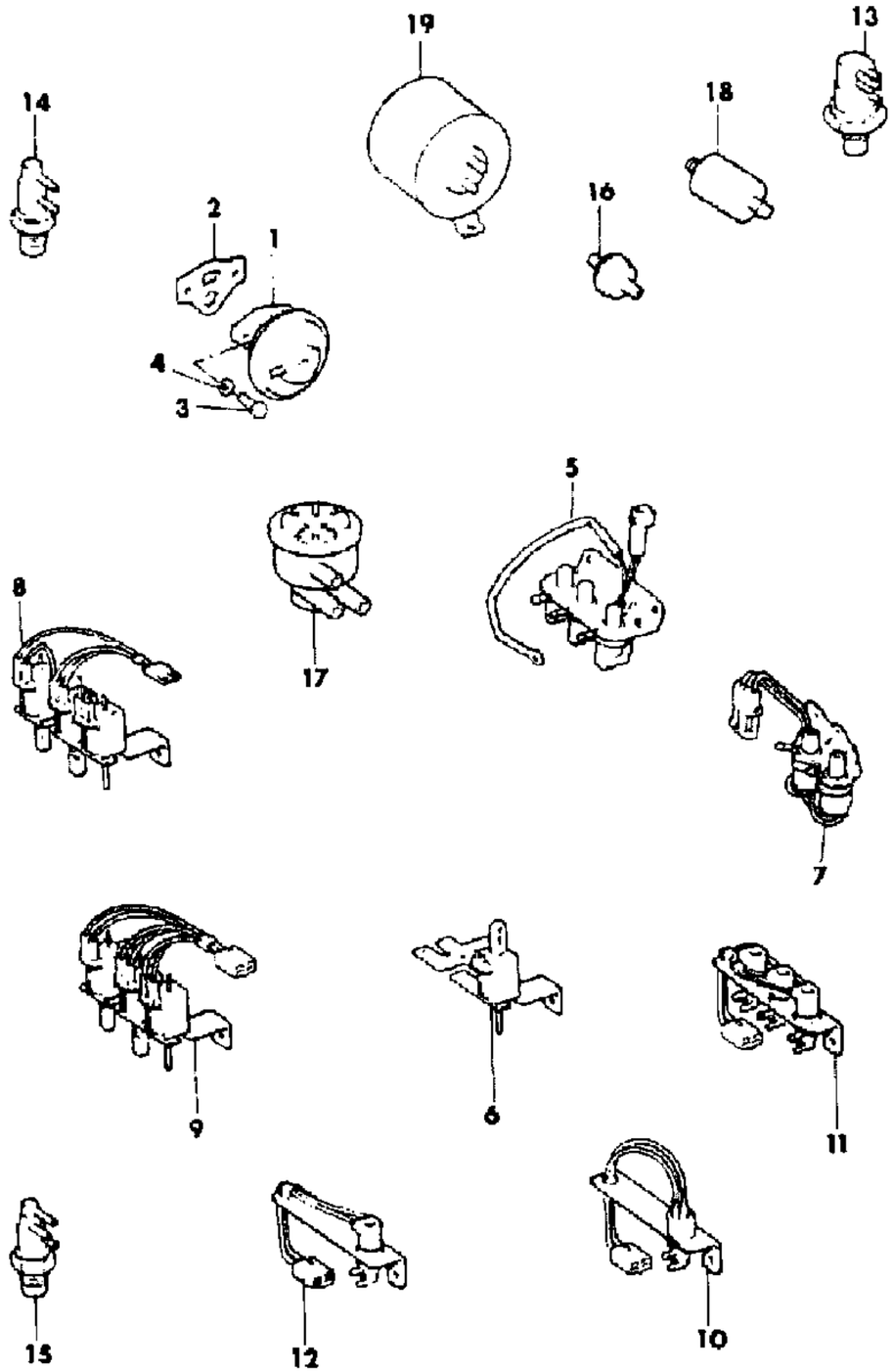

ITEM	PART NUMBER	QTY	BODY	MODEL	DESCRIPTION
1					VALVE, EGR
					with Manual Transmission
	J324 0098	1			1981: Without US-California, with 2.73 Axle Ratio
	J323 9607	1			1981: Without US-California, with 3.31 Ratio
	J323 9369	1			1981: US-California
	J324 0187	1		16,17,1	1981-82: EXPORT, Australian Design Rules
	J324 0098	1		27	1981-85: EXPORT, Australian Design Rules
	J323 8908	1		15,16,1	1981-85: EXPORT, Economic Commission of Europe
	J323 8908	1		25,26	1981-85: EXPORT, Economic Commission of Europe
	J324 1783	1			1982: Without US-California, without Hilly Terrain
	J323 9370	1			1982: Without US-California, with Hilly Terrain
	J324 1781	1			1982: US-California
	J324 1783	1			1982-83: CANADA
	J324 0192	1			1983: US-California
	J324 0101	1		17,18,2	1983-85: EXPORT, Australian Design Rules
	3300 1951	1			1984-86: US-California
	J324 1727	1			1986: High Altitude Operation
					With Automatic Transmission
	J324 0102	1			1981: Without US-California
	J323 8908	1			1981: US-California
	J324 0097	1		15,16,1	1981-85: EXPORT, Economic Commission of Europe
	J324 0097	1		25,26	1981-85: EXPORT, Economic Commission of Europe
	J324 1732	1			1982: Without Hilly Terrain
	J323 8908	1			1982: With Hilly Terrain
	J324 1780	1			1982: US-California
	J324 1732	1			1982: CANADA
	3300 0889	1			1983-86: US-California
	J324 0098	1			1984-86: High Altitude Operation
	3300 1651	1		15	1984-85: EXPORT, Australian Design Rules
		1			With Manual Or Automatic Transmission
	J324 0098	1			1981: CANADA
	J324 0098	1		15,16,1	1981-82: EXPORT, Non-Regulated Markets
	J324 0098	1		25,26	1981-82: EXPORT, Non-Regulated Markets
	J324 1783	1			1983: Without US-California
	J324 1727	1			1984-85: Without US-California, without High Altitude Operation
	J324 1727	1			1984-86: CANADA
	J324 1727	1			1986: Without US-California
2	J322 1283	1			GASKET, EGR
3					BOLT

MODEL CODES

16=Cherokee 2 Dr.(1981-83)
17=Cherokee 2 Dr.(1981-83)
73=Cherokee 2WD-2 Dr.(1984-86)
74=Cherokee 2WD-4 Dr.(1984-86)
18=Cherokee 4 Dr.(1981-83)
77=Cherokee 4WD-2 Dr.(1984-86)
78=Cherokee 4WD-4 Dr.(1984-86)
85=CJ-5 (1981-83)
86=CJ-6(1981)
87=CJ-7(1981-86)
88=CJ-8, Scrambler(1981-86)
64=Comanche 2WD-6 Ft. Box(1986)
66=Comanche 2WD-7 Ft. Box(1986)
63=Comanche 4WD-6 Ft. Box(1986)
65=Comanche 4WD-7 Ft. Box(1986)
15=Grand Wagoneer 4 Dr.(1984-86)
25=J-10 Truck 7 Ft. Box(1981-84)
26=J10 Truck 8 Ft. Box(1981-86)
27=J-20 Truck 8 Ft. Box(1981-86)
15=Wagoneer 4 Dr.(1981-83)
75=Wagoneer 4WD-4 Dr.(1984-86)

BODY
CJ=CJ-5, CJ-6, CJ-7, CJ-8, Scrambler(1981-86)
MJ=Comanche Pickup(1986)

STYLES
SJ=Wagoneer(1981-83), Grand Wagoneer(1984-86), Cherokee(1981-83), J-10, J-20(1981-86)
XJ=Wagoneer(1984-86), Cherokee(1984-86)

AR = Use as Required - = Non Illustrated Part P.A.R. = Paint as Required

« RETURN TO GROUP INDEX »

EMISSION CONTROL COMPONENTS SIX CYLINDER SJ CHEROKEE, SJ WAGONEER, J10, J20
Figure 25-1700

81J25 1700

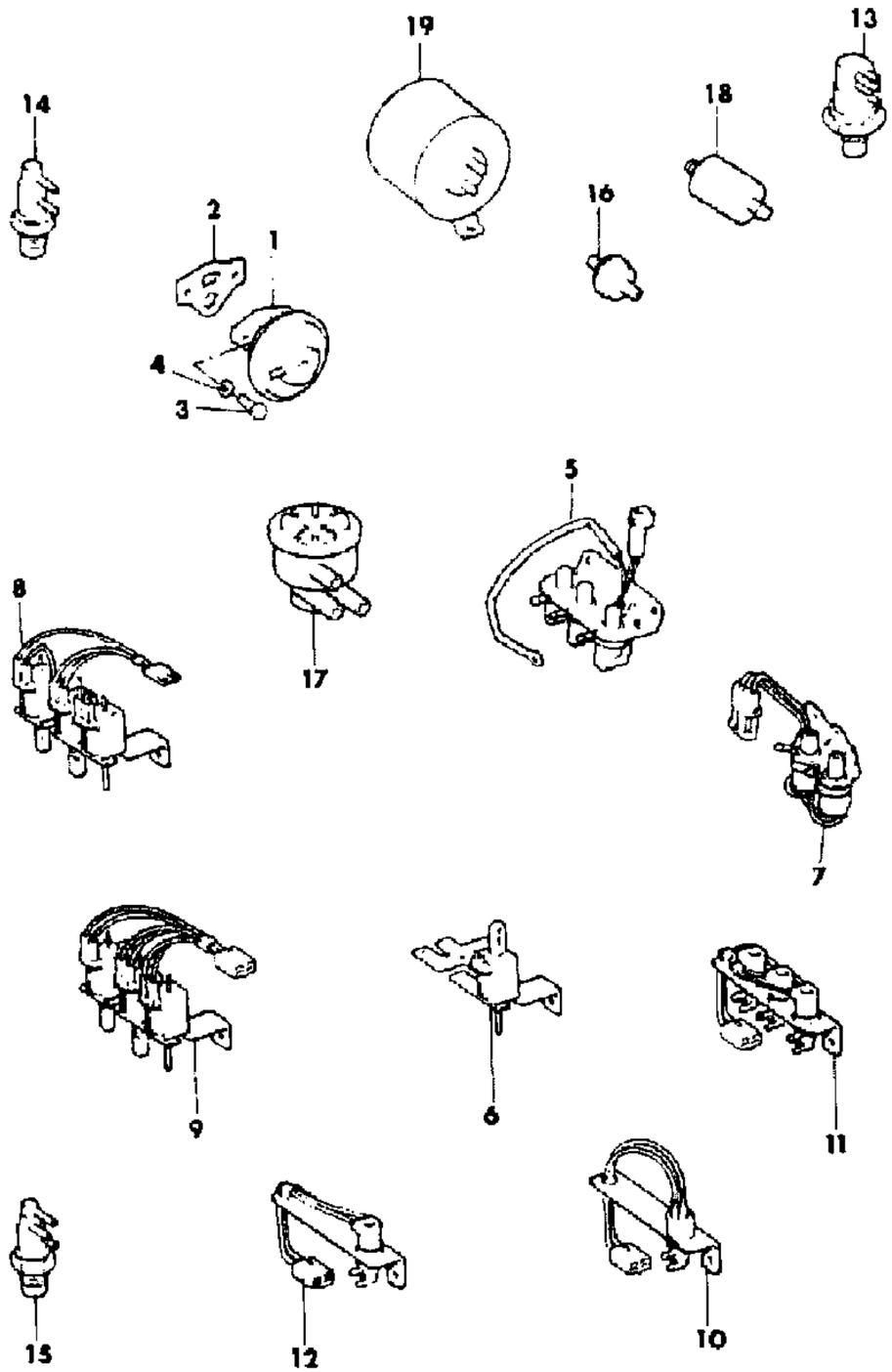

ITEM	PART NUMBER	QTY	BODY	MODEL	DESCRIPTION
	J018 0078	2			7/8" Long
	J018 0079	2			1" Long
4	J012 0214	2			WASHER, Lock
5					SOLENOID, Vacuum Switch
	J323 9374	1			1981: US-California
6					SOLENOID, Vacuum Switch
	J323 9677	1			1981-82: US-49 States
	J323 9677	1			1982: CANADA, Japan
7					SOLENOID, Vacuum Switch
	J324 0803	1			1982-86: US, Canada
8					SOLENOID, Vacuum Switch
	J323 9487	1			1981: US-California
9					SOLENOID, Vacuum Switch
	J324 1165	1			1982: US
10					SOLENOID, Vacuum Switch
	3300 0632	1			1983-84: CANADA
11					SOLENOID, Vacuum Switch
	3300 1945	1			1983-86: US
12					SOLENOID, Vacuum Switch
	3300 1946	1			1985-86: CANADA
13					SWITCH, Dual Function CTO
					Intake Manifold Coolant Passage
	J323 8932	1		15,16,1	1981
	J323 8932	1		25,26	1981
	J324 1784	1		15,16,1	1982: US-California, with Manual Transmission
	J324 1784	1		25,26	1982: US-California, with Manual Transmission
	J323 8932	1			1982: EXPORT, Australian Design Rules, Economic Commission of Europe, Non-Regulated Markets
	J323 8932	1		15,16,1	1983: US-California, EXPORT, Economic Commission of Europe
	J323 8932	1		25,26	1983: US-California, EXPORT, Economic Commission of Europe
	J323 8932	1		17,18,2	1983: EXPORT, Australian Design Rules, with Manual Transmission
	J323 8932	1		15,25,2	1984: US, EXPORT, Economic Commission of Europe
	J323 8932	1		15,27	1984-85: EXPORT, Australian Design Rules, with Manual Transmission
	J323 8932	1		15,25,2	1985: US, EXPORT, Economic Commission of Europe

MODEL CODES

16=Cherokee 2 Dr.(1981-83)
17=Cherokee 2 Dr.(1981-83)
73=Cherokee 2WD-2 Dr.(1984-86)
74=Cherokee 2WD-4 Dr.(1984-86)
18=Cherokee 4 Dr.(1981-83)
77=Cherokee 4WD-2 Dr.(1984-86)
78=Cherokee 4WD-4 Dr.(1984-86)
85=CJ-5 (1981-83)
86=CJ-6(1981)
87=CJ-7(1981-86)
88=CJ-8, Scrambler(1981-86)
64=Comanche 2WD-6 Ft. Box(1986)
66=Comanche 2WD-7 Ft. Box(1986)
63=Comanche 4WD-6 Ft. Box(1986)
65=Comanche 4WD-7 Ft. Box(1986)
15=Grand Wagoneer 4 Dr.(1984-86)
25=J-10 Truck 7 Ft. Box(1981-84)
26=J10 Truck 8 Ft. Box(1981-86)
27=J-20 Truck 8 Ft. Box(1981-86)
15=Wagoneer 4 Dr.(1981-83)
75=Wagoneer 4WD-4 Dr.(1984-86)

BODY
CJ=CJ-5, CJ-6, CJ-7, CJ-8, Scrambler(1981-86)
MJ=Comanche Pickup(1986)

STYLES
SJ=Wagoneer(1981-83), Grand Wagoneer(1984-86), Cherokee(1981-83), J-10, J-20(1981-86)
XJ=Wagoneer(1984-86), Cherokee(1984-86)

AR = Use as Required - = Non Illustrated Part P.A.R. = Paint as Required

EMISSION CONTROL COMPONENTS SIX CYLINDER SJ CHEROKEE, SJ WAGONEER, J10, J20
Figure 25-1700

81J25 1700

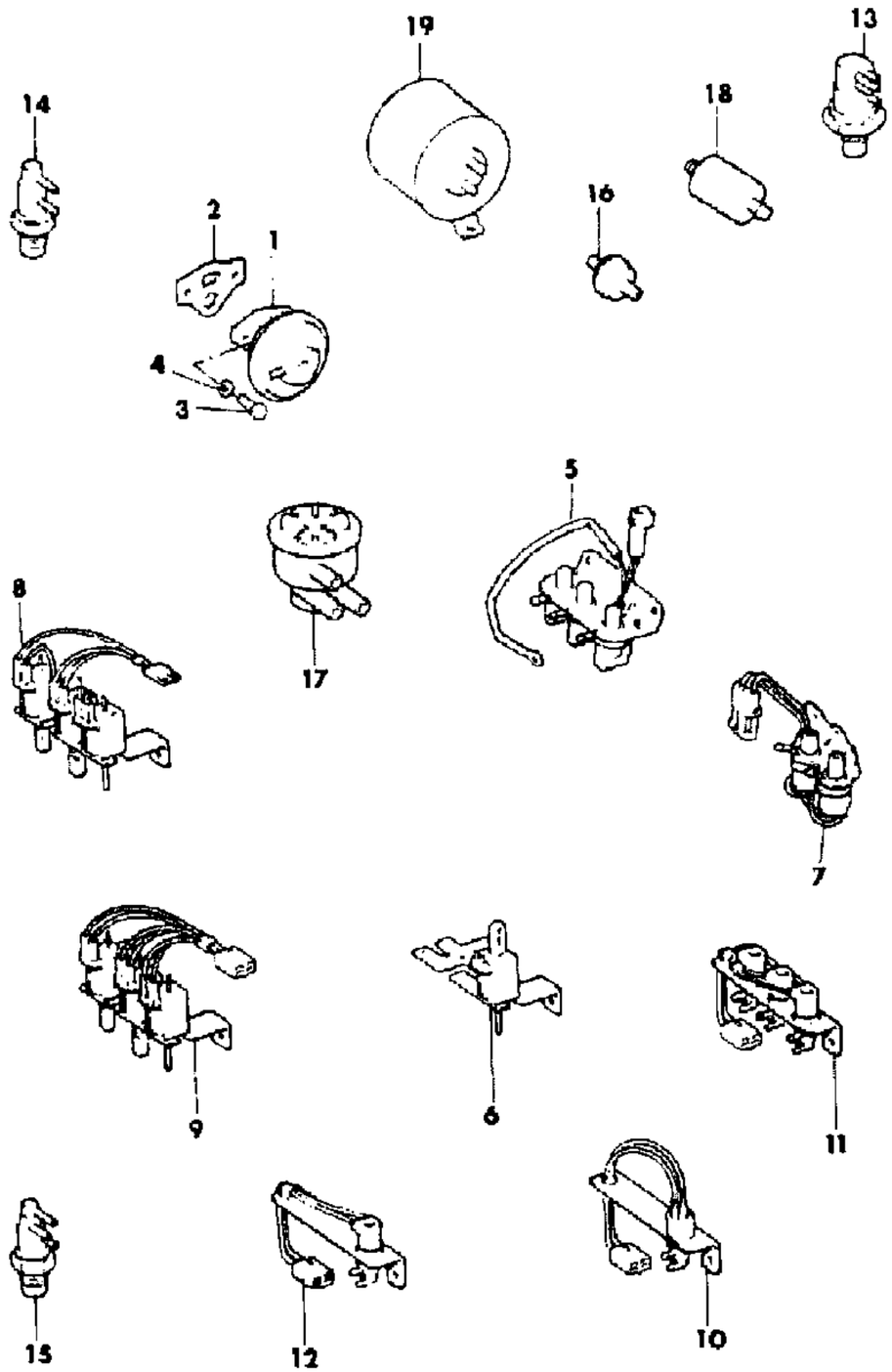

ITEM	PART NUMBER	QTY	BODY	MODEL	DESCRIPTION
	J323 8932	1		15	1985: EXPORT, Australian Design Rules, with Automatic Transmission
	J323 8932	1		15,26	1986: US
14					SWITCH, EGR, CTO
					Left Side of Block
	J322 8288	1		15,16,1	1981: EXPORT, Non-Regulated Markets, with Automatic Transmission
	J322 8288	1		25,26	1981: EXPORT, Non-Regulated Markets, with Automatic Transmission
					Intake Manifold Coolant Passage
	J324 1675	1		15,16,1	1983: US-49 States, CANADA
	J324 1675	1		25,26	1983: US-49 States, CANADA
	J324 1675	1		15,25,2	1984-86: CANADA
	J324 1675	1		15,26	1986: CANADA
15					SWITCH, Spark, CTO
					Intake Manifold Coolant Passage
	J323 5917	1			1983: EXPORT, Non-Regulated Markets
	J323 5917	1		15,25,2	1984-86: EXPORT, Non-Regulated Markets
16					VALVE, Delay
	J323 7293	1			1981-86: Black, Brown
	J323 5261	1			1981-86: Black, Grey
	J323 6284	1			1981-86: Black, Purple
	J323 1379	1			1981-86: Black, White
	J323 1118	1			1981-86: Black, Yellow
	J323 9134	1			1982: Black, Orange
	3300 1440	1		87	1983-85: Japan, Black, Red
					VALVE, Reverse Delay
	J323 5939	1			1981-86: White, Brown
	J323 7184	1			1981-86: White, Gold
	J323 9383	1			1981-86: White, Orange
	J323 6285	1			1981-86: White, Purple
	J323 7131	1			1981-86: White, Red
	J323 7141	1			1981-86: White, Yellow
	J323 5938	1			1981-85: White, Grey
	J324 1800	1			1982: White, Light Green
	5300 2381	1			1986: White, Blue
17	J323 3991	1			VALVE, Non-Linear
18					RESERVOIR, Vacuum
	J323 9603	1			Black, White

MODEL CODES

16=Cherokee 2 Dr.(1981-83)
17=Cherokee 2 Dr.(1981-83)
73=Cherokee 2WD-2 Dr.(1984-86)
74=Cherokee 2WD-4 Dr.(1984-86)
18=Cherokee 4 Dr.(1981-83)
77=Cherokee 4WD-2 Dr.(1984-86)
78=Cherokee 4WD-4 Dr.(1984-86)
85=CJ-5 (1981-83)
86=CJ-6(1981)
87=CJ-7(1981-86)
88=CJ-8, Scrambler(1981-86)
64=Comanche 2WD-6 Ft. Box(1986)
66=Comanche 2WD-7 Ft. Box(1986)
63=Comanche 4WD-6 Ft. Box(1986)
65=Comanche 4WD-7 Ft. Box(1986)
15=Grand Wagoneer 4 Dr.(1984-86)
25=J-10 Truck 7 Ft. Box(1981-84)
26=J10 Truck 8 Ft. Box(1981-86)
27=J-20 Truck 8 Ft. Box(1981-86)
15=Wagoneer 4 Dr.(1981-83)
75=Wagoneer 4WD-4 Dr.(1984-86)

BODY
CJ=CJ-5, CJ-6, CJ-7, CJ-8, Scrambler(1981-86)
MJ=Comanche Pickup(1986)

STYLES
SJ=Wagoneer(1981-83), Grand Wagoneer(1984-86), Cherokee(1981-83), J-10, J-20(1981-86)
XJ=Wagoneer(1984-86), Cherokee(1984-86)

AR = Use as Required - = Non Illustrated Part P.A.R. = Paint as Required

81J25 1700

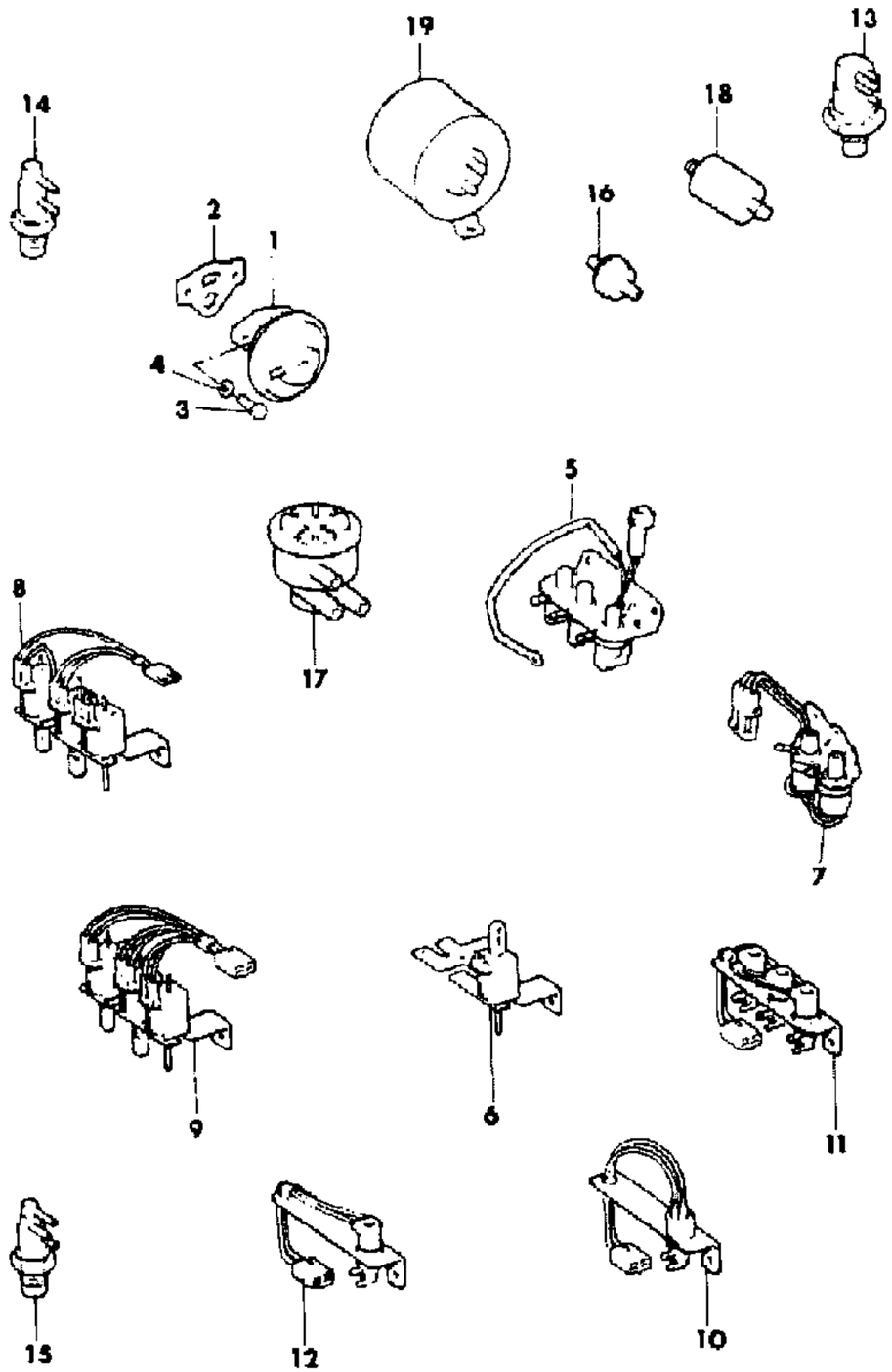

ITEM	PART NUMBER	QTY	BODY	MODEL	DESCRIPTION
	J323 9467	1			Black
19	5300 1068	1			TANK, Vacuum

MODEL CODES
16=Cherokee 2 Dr.(1981-83)
17=Cherokee 2 Dr.(1981-83)
73=Cherokee 2WD-2 Dr.(1984-86)
74=Cherokee 2WD-4 Dr.(1984-86)
18=Cherokee 4 Dr.(1981-83)
77=Cherokee 4WD-2 Dr.(1984-86)
78=Cherokee 4WD-4 Dr.(1984-86)
85=CJ-5 (1981-83)
86=CJ-6(1981)
87=CJ-7(1981-86)
88=CJ-8, Scrambler(1981-86)
64=Comanche 2WD-6 Ft. Box(1986)
66=Comanche 2WD-7 Ft. Box(1986)
63=Comanche 4WD-6 Ft. Box(1986)
65=Comanche 4WD-7 Ft. Box(1986)
15=Grand Wagoneer 4 Dr.(1984-86)
25=J-10 Truck 7 Ft. Box(1981-84)
26=J10 Truck 8 Ft. Box(1981-86)
27=J-20 Truck 8 Ft. Box(1981-86)
15=Wagoneer 4 Dr.(1981-83)
75=Wagoneer 4WD-4 Dr.(1984-86)

BODY
CJ=CJ-5, CJ-6, CJ-7, CJ-8, Scrambler(1981-86)
MJ=Comanche Pickup(1986)

STYLES
SJ=Wagoneer(1981-83), Grand Wagoneer(1984-86), Cherokee(1981-83), J-10, J-20(1981-86)
XJ=Wagoneer(1984-86), Cherokee(1984-86)

AR = Use as Required - = Non Illustrated Part P.A.R. = Paint as Required

EMISSION CONTROL VACUUM HARNESS EIGHT CYLINDER SJ CHEROKEE, SJ WAGONEER, J10, J20
Figure 25-1800

81J25 1800

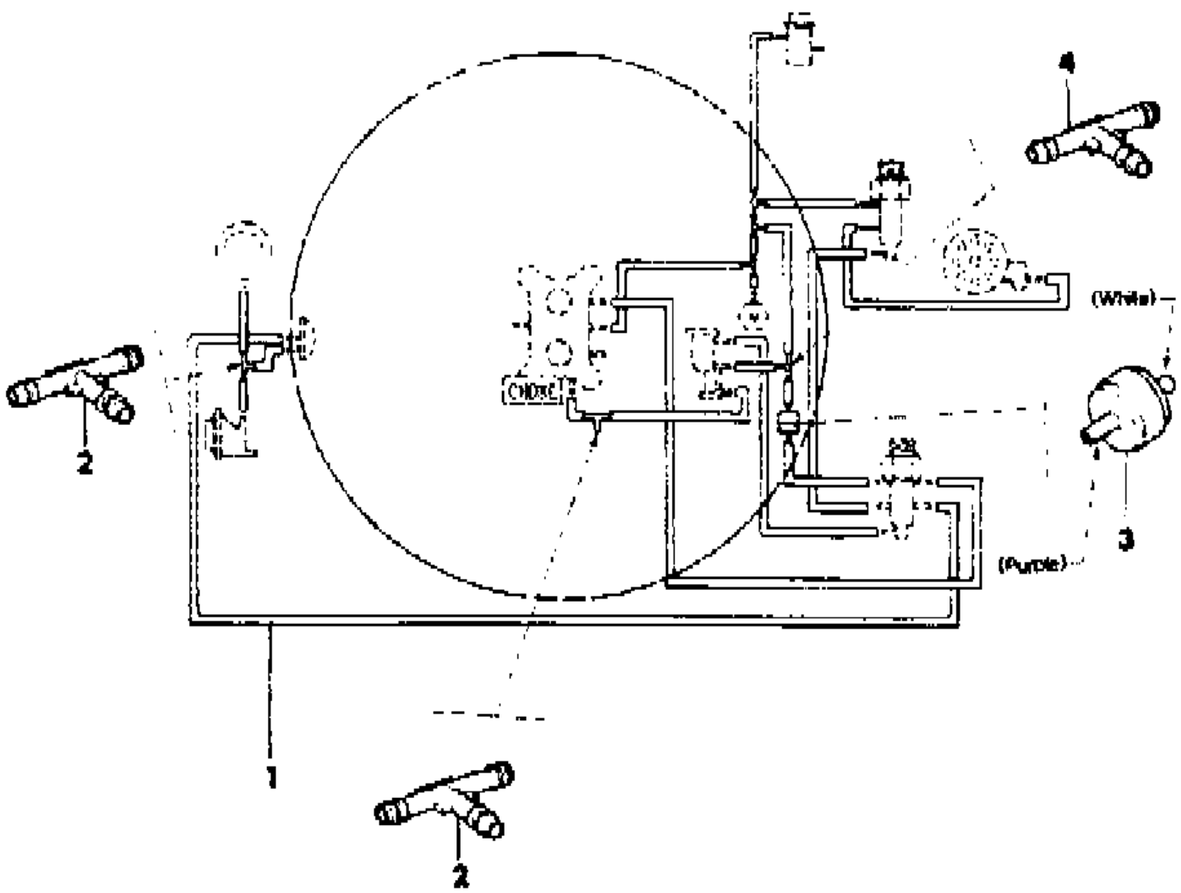

ITEM	PART NUMBER	QTY	BODY	MODEL	DESCRIPTION
1					HARNESS, Vacuum
					With Manual Transmission
	J324 0609	1		27	1981-83: Without US-California, with Heavy Duty Cooling, Identified BV
	J324 0607	1		27	1981-83: Without US-California, without Heavy Duty Cooling, Identified BU
	J324 0486	1			1981-82: EXPORT, Economic Commission of Europe, without Heavy Duty Cooling, Identified BE
	J324 0487	1			1981-82: EXPORT, Economic Commission of Europe, with Heavy Duty Cooling, Identified BF
	J324 0483	1			1982: Without US-California, without Hilly Terrain, with Heavy Duty Cooling
	J324 2330	1		15,16,1	1983: EXPORT, Economic Commission of Europe, without Heavy Duty Cooling
	J324 2330	1		25,26	1983: EXPORT, Economic Commission of Europe, without Heavy Duty Cooling
	J324 2331	1		15,16,1	1983: EXPORT, Economic Commission of Europe, with Heavy Duty Cooling
	J324 2331	1		25,26	1983: EXPORT, Economic Commission of Europe, with Heavy Duty Cooling
					With Automatic Transmission
	J324 0482	1		27	1981: Without US-California, without Heavy Duty Cooling, Identified BA
	J324 1196	1		15,16,1	1981: EXPORT, Australian Design Rules, without Heavy Duty Cooling
	J324 1198	1		15,16,1	1981: EXPORT, Australian Design Rules, with Heavy Duty Cooling
	J324 0496	1		15,16,1	1981-82: EXPORT, Economic Commission of Europe, without Heavy Duty Cooling, Identified BJ
	J324 0496	1		25,26	1981-82: EXPORT, Economic Commission of Europe, without Heavy Duty Cooling, Identified BJ
	J324 0497	1		15,16,1	1981-82: EXPORT, Economic Commission of Europe, with Heavy Duty Cooling, Identified BK
	J324 0497	1		25,26	1981-82: EXPORT, Economic Commission of Europe, with Heavy Duty Cooling, Identified BK
	J324 0483	1		15,16,1	1981-82: Without US-California, with Heavy Duty Cooling, Identified BB
	J324 0483	1		25,26	1981-82: Without US-California, with Heavy Duty Cooling, Identified BB

MODEL CODES

16=Cherokee 2 Dr.(1981-83)
17=Cherokee 2 Dr.(1981-83)
73=Cherokee 2WD-2 Dr.(1984-86)
74=Cherokee 2WD-4 Dr.(1984-86)
18=Cherokee 4 Dr.(1981-83)
77=Cherokee 4WD-2 Dr.(1984-86)
78=Cherokee 4WD-4 Dr.(1984-86)
85=CJ-5 (1981-83)
86=CJ-6(1981)
87=CJ-7(1981-86)
88=CJ-8, Scrambler(1981-86)
64=Comanche 2WD-6 Ft. Box(1986)
66=Comanche 2WD-7 Ft. Box(1986)
63=Comanche 4WD-6 Ft. Box(1986)
65=Comanche 4WD-7 Ft. Box(1986)
15=Grand Wagoneer 4 Dr.(1984-86)
25=J-10 Truck 7 Ft. Box(1981-84)
26=J10 Truck 8 Ft. Box(1981-86)
27=J-20 Truck 8 Ft. Box(1981-86)
15=Wagoneer 4 Dr.(1981-83)
75=Wagoneer 4WD-4 Dr.(1984-86)

BODY
CJ=CJ-5, CJ-6, CJ-7, CJ-8, Scrambler(1981-86)
MJ=Comanche Pickup(1986)

STYLES
SJ=Wagoneer(1981-83), Grand Wagoneer(1984-86), Cherokee(1981-83), J-10, J-20(1981-86)
XJ=Wagoneer(1984-86), Cherokee(1984-86)

AR = Use as Required - = Non Illustrated Part P.A.R. = Paint as Required

EMISSION CONTROL VACUUM HARNESS EIGHT CYLINDER SJ CHEROKEE, SJ WAGONEER, J10, J20
Figure 25-1800

81J25 1800

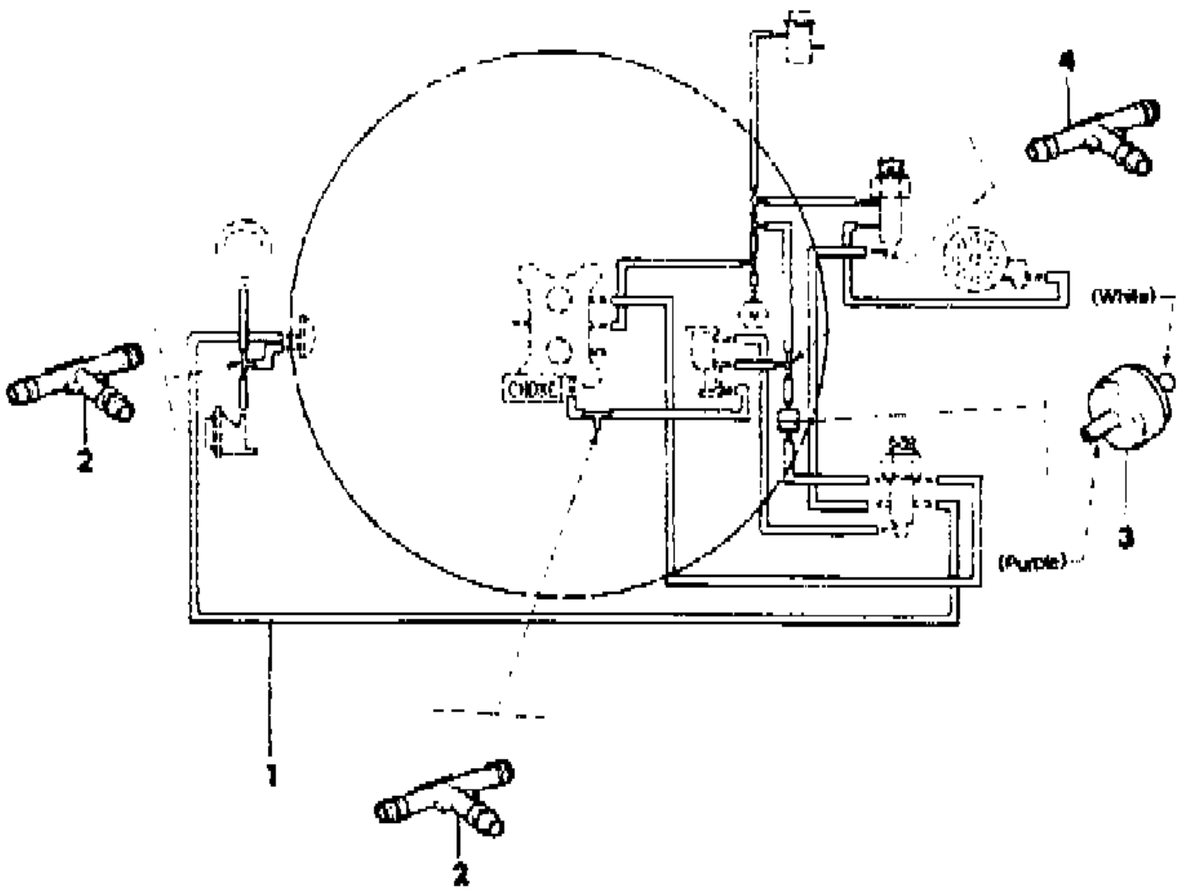

ITEM	PART NUMBER	QTY	BODY	MODEL	DESCRIPTION
	J324 0483	1		27	1981-83: Without US-California, with Heavy Duty Cooling, Identified BB
	J324 2252	1		16,17,1	1982: EXPORT, Australian Design Rules, without Heavy Duty Cooling
	J324 2251	1		16,17,1	1982: EXPORT, Australian Design Rules, with Heavy Duty Cooling
	J324 2298	1		17,18	1983: EXPORT, Australian Design Rules, Right Hand Drive, without Heavy Duty Cooling
	J324 2299	1		17,18	1983: EXPORT, Australian Design Rules, Right Hand Drive, with Heavy Duty Cooling
	J324 2332	1		15,16,1	1983-85: EXPORT, Economic Commission of Europe, without Heavy Duty Cooling
	J324 2332	1		25,26	1983-85: EXPORT, Economic Commission of Europe, without Heavy Duty Cooling
	J324 2333	1		15,16,1	1983-85: EXPORT, Economic Commission of Europe, with Heavy Duty Cooling
	J324 2333	1		25,26	1983-85: EXPORT, Economic Commission of Europe, with Heavy Duty Cooling
	J324 2298	1		15	1984-85: EXPORT, Australian Design Rules, Right Hand Drive, without Heavy Duty Cooling
	J324 2299	1		15	1984-85: EXPORT, Australian Design Rules, Right Hand Drive, with Heavy Duty Cooling
	3300 2077	1			1984-86: CANADA With Manual or Automatic Transmission
	J324 0482	1		15,16,1	1981-82: Without US-California, without Heavy Duty Cooling, Identified BA
	J324 0482	1		25,26	1981-82: Without US-California, without Heavy Duty Cooling, Identified BA
	J324 0484	1		15,16,1	1981-83: CANADA, without Heavy Duty Cooling, Identified BC
	J324 0484	1		25,26	1981-83: CANADA, without Heavy Duty Cooling, Identified BC
	J324 0485	1		15,16,1	1981-83: CANADA, with Heavy Duty Cooling, Identified BD
	J324 0485	1		25,26	1981-83: CANADA, with Heavy Duty Cooling, Identified BD
	J324 0484	1			1981-85: EXPORT, Non-Regulated Markets, without Heavy Duty Cooling
	J324 0485	1			1981-85: EXPORT, Non-Regulated Markets, with Heavy Duty Cooling
	J324 0482	1		15,16,1	1983: Without Heavy Duty Cooling, Identified BA
	J324 0482	1		25,26	1983: Without Heavy Duty Cooling, Identified BA
	J324 0483	1		15,16,1	1983: With Heavy Duty Cooling, Identified BB

MODEL CODES

16=Cherokee 2 Dr.(1981-83)
17=Cherokee 2 Dr.(1981-83)
73=Cherokee 2WD-2 Dr.(1984-86)
74=Cherokee 2WD-4 Dr.(1984-86)
18=Cherokee 4 Dr.(1981-83)
77=Cherokee 4WD-2 Dr.(1984-86)
78=Cherokee 4WD-4 Dr.(1984-86)
85=CJ-5 (1981-83)
86=CJ-6(1981)
87=CJ-7(1981-86)
88=CJ-8, Scrambler(1981-86)
64=Comanche 2WD-6 Ft. Box(1986)
66=Comanche 2WD-7 Ft. Box(1986)
63=Comanche 4WD-6 Ft. Box(1986)
65=Comanche 4WD-7 Ft. Box(1986)
15=Grand Wagoneer 4 Dr.(1984-86)
25=J-10 Truck 7 Ft. Box(1981-84)
26=J10 Truck 8 Ft. Box(1981-86)
27=J-20 Truck 8 Ft. Box(1981-86)
15=Wagoneer 4 Dr.(1981-83)
75=Wagoneer 4WD-4 Dr.(1984-86)

BODY
CJ=CJ-5, CJ-6, CJ-7, CJ-8, Scrambler(1981-86)
MJ=Comanche Pickup(1986)

STYLES
SJ=Wagoneer(1981-83), Grand Wagoneer(1984-86), Cherokee(1981-83), J-10, J-20(1981-86)
XJ=Wagoneer(1984-86), Cherokee(1984-86)

AR = Use as Required - = Non Illustrated Part P.A.R. = Paint as Required

EMISSION CONTROL VACUUM HARNESS EIGHT CYLINDER SJ CHEROKEE, SJ WAGONEER, J10, J20
Figure 25-1800

81J25 1800

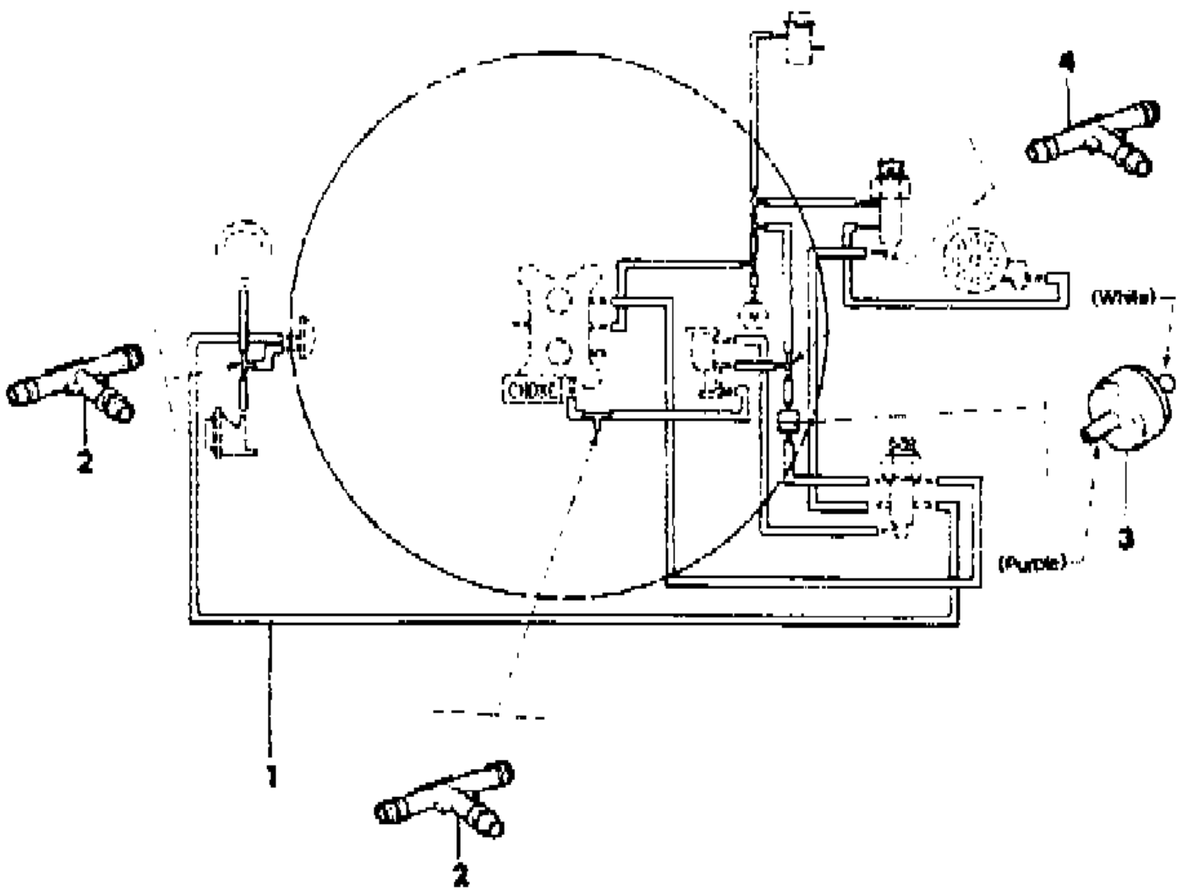

ITEM	PART NUMBER	QTY	BODY	MODEL	DESCRIPTION
	J324 0483	1		25,26	1983: With Heavy Duty Cooling, Identified BB
	3300 2077	1		15,26,2	1986: EXPORT, Non-Regulated Markets
2	J321 0891	2			CONNECTOR, Tee
3	J323 6285	1			VALVE, Reverse Delay
4	J321 2314	1			CONNECTOR, Tee

MODEL CODES

16=Cherokee 2 Dr.(1981-83)
17=Cherokee 2 Dr.(1981-83)
73=Cherokee 2WD-2 Dr.(1984-86)
74=Cherokee 2WD-4 Dr.(1984-86)
18=Cherokee 4 Dr.(1981-83)
77=Cherokee 4WD-2 Dr.(1984-86)
78=Cherokee 4WD-4 Dr.(1984-86)
85=CJ-5 (1981-83)
86=CJ-6(1981)
87=CJ-7(1981-86)
88=CJ-8, Scrambler(1981-86)
64=Comanche 2WD-6 Ft. Box(1986)
66=Comanche 2WD-7 Ft. Box(1986)
63=Comanche 4WD-6 Ft. Box(1986)
65=Comanche 4WD-7 Ft. Box(1986)
15=Grand Wagoneer 4 Dr.(1984-86)
25=J-10 Truck 7 Ft. Box(1981-84)
26=J10 Truck 8 Ft. Box(1981-86)
27=J-20 Truck 8 Ft. Box(1981-86)
15=Wagoneer 4 Dr.(1981-83)
75=Wagoneer 4WD-4 Dr.(1984-86)

BODY
CJ=CJ-5, CJ-6, CJ-7, CJ-8, Scrambler(1981-86)
MJ=Comanche Pickup(1986)

STYLES
SJ=Wagoneer(1981-83), Grand Wagoneer(1984-86), Cherokee(1981-83), J-10, J-20(1981-86)
XJ=Wagoneer(1984-86), Cherokee(1984-86)

AR = Use as Required - = Non Illustrated Part P.A.R. = Paint as Required

« RETURN TO GROUP INDEX

81J25 1900

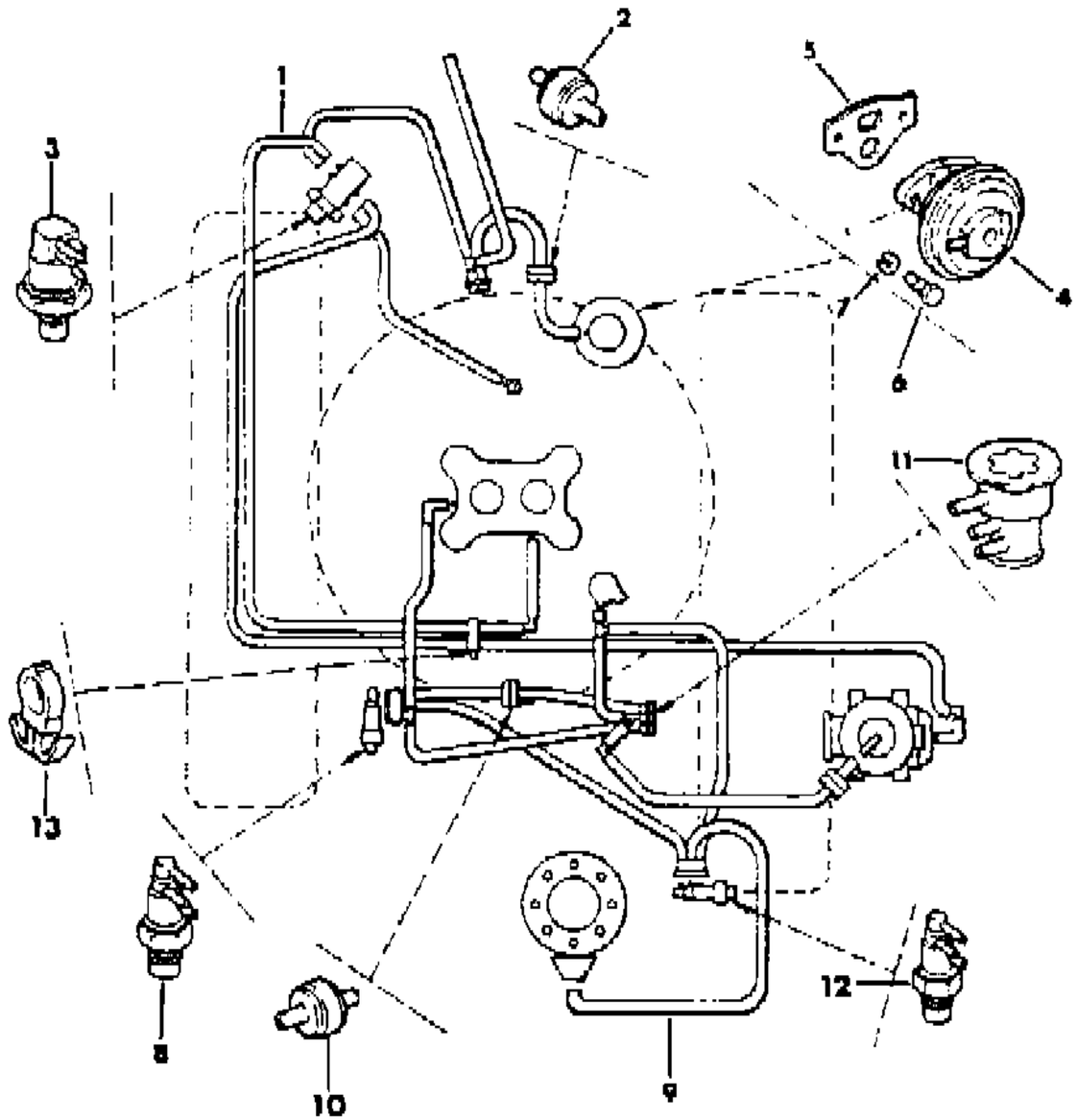

ITEM	PART NUMBER	QTY	BODY	MODEL	DESCRIPTION
1					HARNESS, EGR Vacuum
					With Automatic Transmission
	3300 1660	1			1984-85: US-49 States
	3300 2080	1			1984-85: US-California
	5300 2992	1			1986
2					VALVE, Delay
					With Automatic Transmission
	J323 6284	1			1984-85: US-49 States
	J323 6284	1			1986
3					SWITCH, Dual Function
					Intake Manifold Coolant Passage
	J323 8932	1		15,16,1	1981
	J323 8932	1		25,26	1981
	J323 8932	1			1982-83
	J323 8932	1		15,25,2	1984-85: EXPORT, Non-Regulated Markets
	J323 8932	1		15,25,2	1984-85: EXPORT, Economic Commission of Europe
	J323 8932	1		15,27	1984-85: Australian Design Rules, Right Hand Drive, with Automatic Transmission
	3300 1669	1		15,25,2	1984-86: US-50 States
	3300 1669	1		27	1984-86: US-49 States, with Automatic Transmission
	3300 1669	1		27	1984-86: CANADA, with Automatic Transmission
4					VALVE, EGR
					With Manual Transmission
	J323 9362	1		15,16,1	1981-82: Without US-California
	J323 9362	1		25,26	1981-82: Without US-California
	J323 9364	1		27	1981-83: Without US-California
	J323 9362	1		15,16,1	1983
	J323 9362	1		25,26	1983
					With Automatic Transmission
	J324 0057	1		15,16,1	1981-82: Without US-California
	J324 0057	1		25,26	1981-82: Without US-California
	J323 9359	1		27	1981-83: Without US-California
	J324 0057	1		15,16,1	1983
	J324 0057	1		25,26	1983
	J324 0052	1		15,16,1	1984-85: Without US-California
	J324 0052	1		25,26	1984-85: Without US-California
	J323 9372	1		15,16,1	1984-85: US-California
	J323 9372	1		25,26	1984-85: US-California
	3300 0865	1		27	1984-85: Without US-California

MODEL CODES
16=Cherokee 2 Dr.(1981-83)
17=Cherokee 2 Dr.(1981-83)
73=Cherokee 2WD-2 Dr.(1984-86)
74=Cherokee 2WD-4 Dr.(1984-86)
18=Cherokee 4 Dr.(1981-83)
77=Cherokee 4WD-2 Dr.(1984-86)
78=Cherokee 4WD-4 Dr.(1984-86)
85=CJ-5 (1981-83)
86=CJ-6(1981)
87=CJ-7(1981-86)
88=CJ-8, Scrambler(1981-86)
64=Comanche 2WD-6 Ft. Box(1986)
66=Comanche 2WD-7 Ft. Box(1986)
63=Comanche 4WD-6 Ft. Box(1986)
65=Comanche 4WD-7 Ft. Box(1986)
15=Grand Wagoneer 4 Dr.(1984-86)
25=J-10 Truck 7 Ft. Box(1981-84)
26=J10 Truck 8 Ft. Box(1981-86)
27=J-20 Truck 8 Ft. Box(1981-86)
15=Wagoneer 4 Dr.(1981-83)
75=Wagoneer 4WD-4 Dr.(1984-86)

BODY
CJ=CJ-5, CJ-6, CJ-7, CJ-8, Scrambler(1981-86)
MJ=Comanche Pickup(1986)

STYLES
SJ=Wagoneer(1981-83), Grand Wagoneer(1984-86), Cherokee(1981-83), J-10, J-20(1981-86)
XJ=Wagoneer(1984-86), Cherokee(1984-86)

AR = Use as Required - = Non Illustrated Part P.A.R. = Paint as Required

EMISSION CONTROL COMPONENTS EIGHT CYLINDER SJ CHEROKEE, SJ WAGONEER, J10, J20
Figure 25-1900

81J25 1900

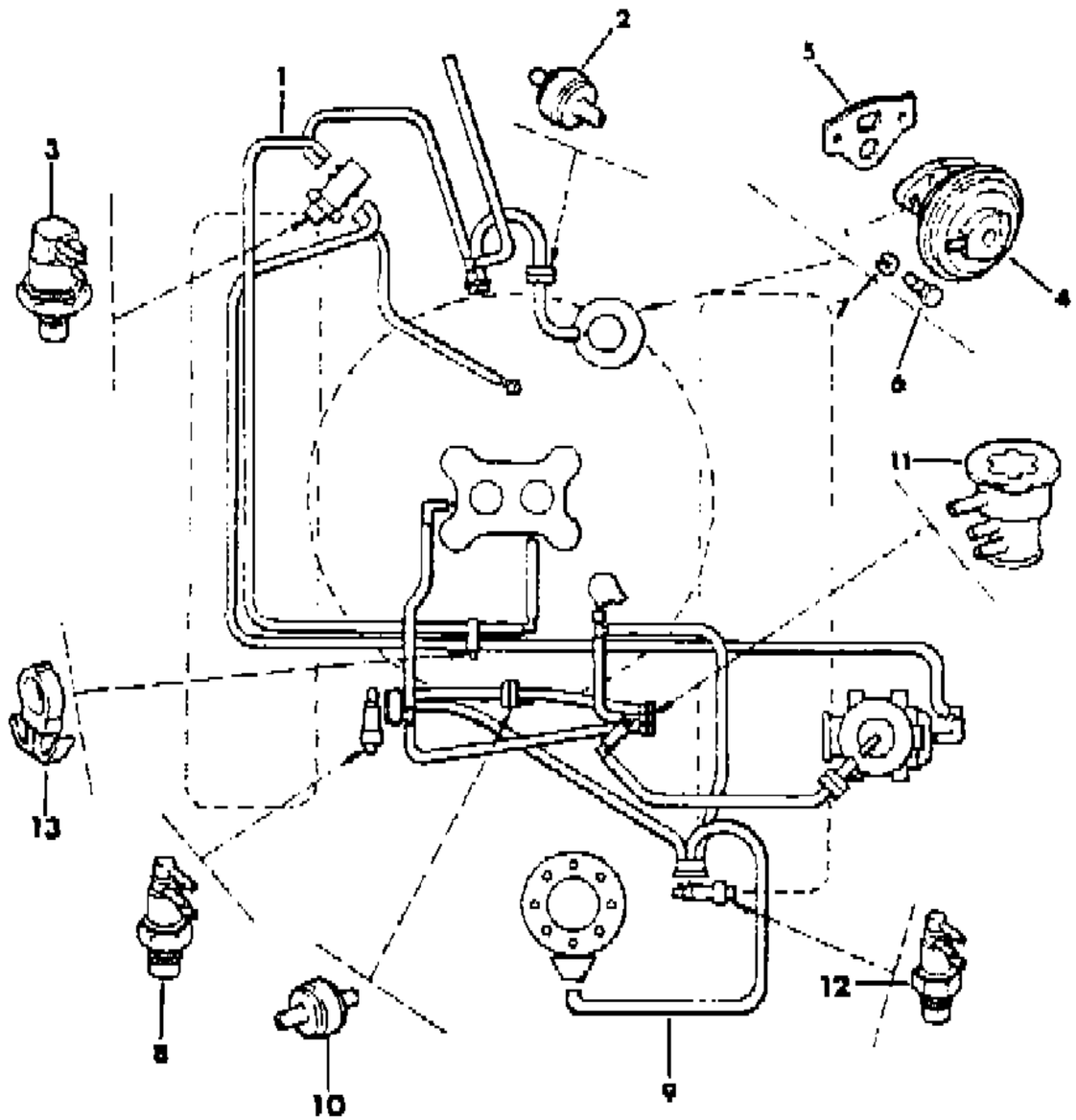

ITEM	PART NUMBER	QTY	BODY	MODEL	DESCRIPTION
					With Manual or Automatic Transmission
	J324 0102	1		15,26,2	1986
5	J322 1283	1			GASKET, EGR
6	J018 0078	2			BOLT
7	J012 0214	2			WASHER, Lock
8					SWITCH, Spark CTO
					Intake Manifold Cooland Passage
	J323 5917	1		15,25,2	1984-86: US-California, with Automatic Transmission
	J323 5917	1		15,25,2	1984-86: US-49 States, with Automatic Transmission
9					HARNESS, Distributor Vacuum
					With Automatic Transmission
	3300 1987	1		15,25,2	1984-85: With Heavy Duty Cooling
	3300 1988	1		15,25,2	1984-85: Without Heavy Duty Cooling
	5300 2996	1		15,25,2	1986: With Heavy Duty Cooling
	5300 2997	1		15,25,2	1986: Without Heavy Duty Cooling
10	J323 6285	1			VALVE, Reverse Delay
11	J323 3991	1			VALVE, Non-Linear
12					SWITCH, HDC CTO
					Thermostat Housing
	J535 8881	1			1981-86
13	J400 6550	1			CLIP

MODEL CODES

16=Cherokee 2 Dr.(1981-83)	78=Cherokee 4WD-4 Dr.(1984-86)	64=Comanche 2WD-6 Ft. Box(1986)	25=J-10 Truck 7 Ft. Box(1981-84)
17=Cherokee 2 Dr.(1981-83)	85=CJ-5 (1981-83)	66=Comanche 2WD-7 Ft. Box(1986)	26=J10 Truck 8 Ft. Box(1981-86)
73=Cherokee 2WD-2 Dr.(1984-86)	86=CJ-6(1981)	63=Comanche 4WD-6 Ft. Box(1986)	27=J-20 Truck 8 Ft. Box(1981-86)
74=Cherokee 2WD-4 Dr.(1984-86)	87=CJ-7(1981-86)	65=Comanche 4WD-7 Ft. Box(1986)	15=Wagoneer 4 Dr.(1981-83)
18=Cherokee 4 Dr.(1981-83)	88=CJ-8, Scrambler(1981-86)	15=Grand Wagoneer 4 Dr.(1984-86)	75=Wagoneer 4WD-4 Dr.(1984-86)
77=Cherokee 4WD-2 Dr.(1984-86)			

BODY
CJ=CJ-5, CJ-6, CJ-7, CJ-8, Scrambler(1981-86)
MJ=Comanche Pickup(1986)

STYLES
SJ=Wagoneer(1981-83), Grand Wagoneer(1984-86), Cherokee(1981-83), J-10, J-20(1981-86)
XJ=Wagoneer(1984-86), Cherokee(1984-86)

AR = Use as Required - = Non Illustrated Part P.A.R. = Paint as Required

EMISSION CONTROL COMPONENTS, CANADA, NRM, ECE, ADREIGHT CYLINDER SJ CHEROKEE, SJ WAGONEER, J10, J20
Figure 25-2000

81J25 2000

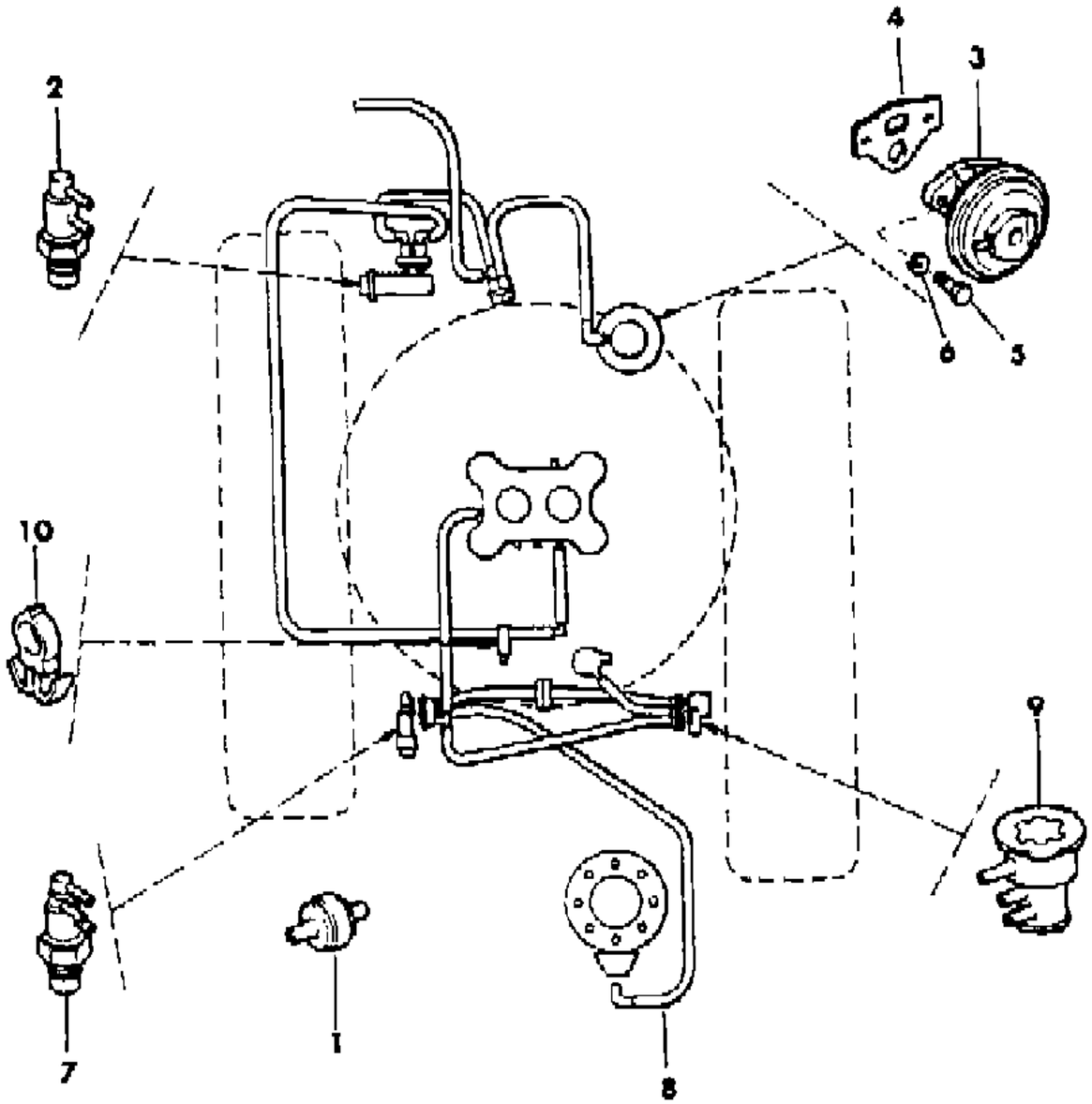

ITEM	PART NUMBER	QTY	BODY	MODEL	DESCRIPTION
1	J323 6285	1			VALVE, Reverse Delay
2					SWITCH, EGR CTO
					Intake Manifold Coolant Passage
	J324 1675	1		15,25,2	1984-86: CANADA, with Automatic Transmission
	J324 1675	1		15,26,2	1986: EXPORT, Non-Regulated Markets
3					VALVE, EGR
					With Automatic Transmission
	J324 0279	1		15,16,1	1981-83: EXPORT, Australian Design Rules
	J323 9362	1		17,18,2	1983-85: EXPORT, Australian Design Rules, Right Hand Drive
	J324 0102	1		15,26	1986: CANADA
					With Manual or Automatic Transmission
	J323 9362	1			1981-82: CANADA
	J323 9362	1		15,16,1	1981-85: EXPORT, Non-Regulated Markets
	J323 9362	1		25,26	1981-85: EXPORT, Non-Regulated Markets
	J324 0189	1		15,16,1	1981-86: EXPORT, Economic Commission of Europe
	J324 0189	1		25,26	1981-86: EXPORT, Economic Commission of Europe
	J323 9362	1		27	1982-85: EXPORT, Non-Regulated Markets
	J323 9362	1		15,16,1	1983: CANADA
	J323 9362	1		25,26	1983: CANADA
	J324 0102	1		15,26,2	1986: EXPORT, Non-Regulated Markets
4	J322 1283	1			GASKET, EGR
5	J018 0078	2			BOLT
6	J012 0214	2			WASHER, Lock
7					SWITCH, Spark CTO
					Intake Manifold Coolant Passage
	J323 5917	1			1984-86: CANADA, with Automatic Transmission
	J323 5917	1		15,26,2	1986: EXPORT, Non-Regulated Markets
8					HARNESS, Distributor Vacuum
	3300 1987	1			1986: CANADA, with Heavy Duty Cooling, with Automatic Transmission
	3300 1988	1			1986: CANADA, without Heavy Duty Cooling, with Automatic Transmission
	3300 1987	1		15,26,2	1986: EXPORT, Non-Regulated Markets, with Heavy Duty Cooling
	3300 1988	1		15,26,2	1986: EXPORT, Non-Regulated Markets, without Heavy Duty Cooling
9	J323 3991	1			VALVE, Non-Linear
10	J400 6550	1			CLIP

MODEL CODES

16=Cherokee 2 Dr.(1981-83)	78=Cherokee 4WD-4 Dr.(1984-86)	64=Comanche 2WD-6 Ft. Box(1986)	25=J-10 Truck 7 Ft. Box(1981-84)
17=Cherokee 2 Dr.(1981-83)	85=CJ-5 (1981-83)	66=Comanche 2WD-7 Ft. Box(1986)	26=J10 Truck 8 Ft. Box(1981-86)
73=Cherokee 2WD-2 Dr.(1984-86)	86=CJ-6(1981)	63=Comanche 4WD-6 Ft. Box(1986)	27=J-20 Truck 8 Ft. Box(1981-86)
74=Cherokee 2WD-4 Dr.(1984-86)	87=CJ-7(1981-86)	65=Comanche 4WD-7 Ft. Box(1986)	15=Wagoneer 4 Dr.(1981-83)
18=Cherokee 4 Dr.(1981-83)	88=CJ-8, Scrambler(1981-86)	15=Grand Wagoneer 4 Dr.(1984-86)	75=Wagoneer 4WD-4 Dr.(1984-86)
77=Cherokee 4WD-2 Dr.(1984-86)			

BODY
CJ=CJ-5, CJ-6, CJ-7, CJ-8, Scrambler(1981-86)
MJ=Comanche Pickup(1986)

STYLES
SJ=Wagoneer(1981-83), Grand Wagoneer(1984-86), Cherokee(1981-83), J-10, J-20(1981-86)
XJ=Wagoneer(1984-86), Cherokee(1984-86)

AR = Use as Required - = Non Illustrated Part P.A.R. = Paint as Required

« RETURN TO GROUP INDEX

VAPOR CANISTER CJ-5,6,7,8, SCRAMBLER
Figure 25-2100

81J25 2100

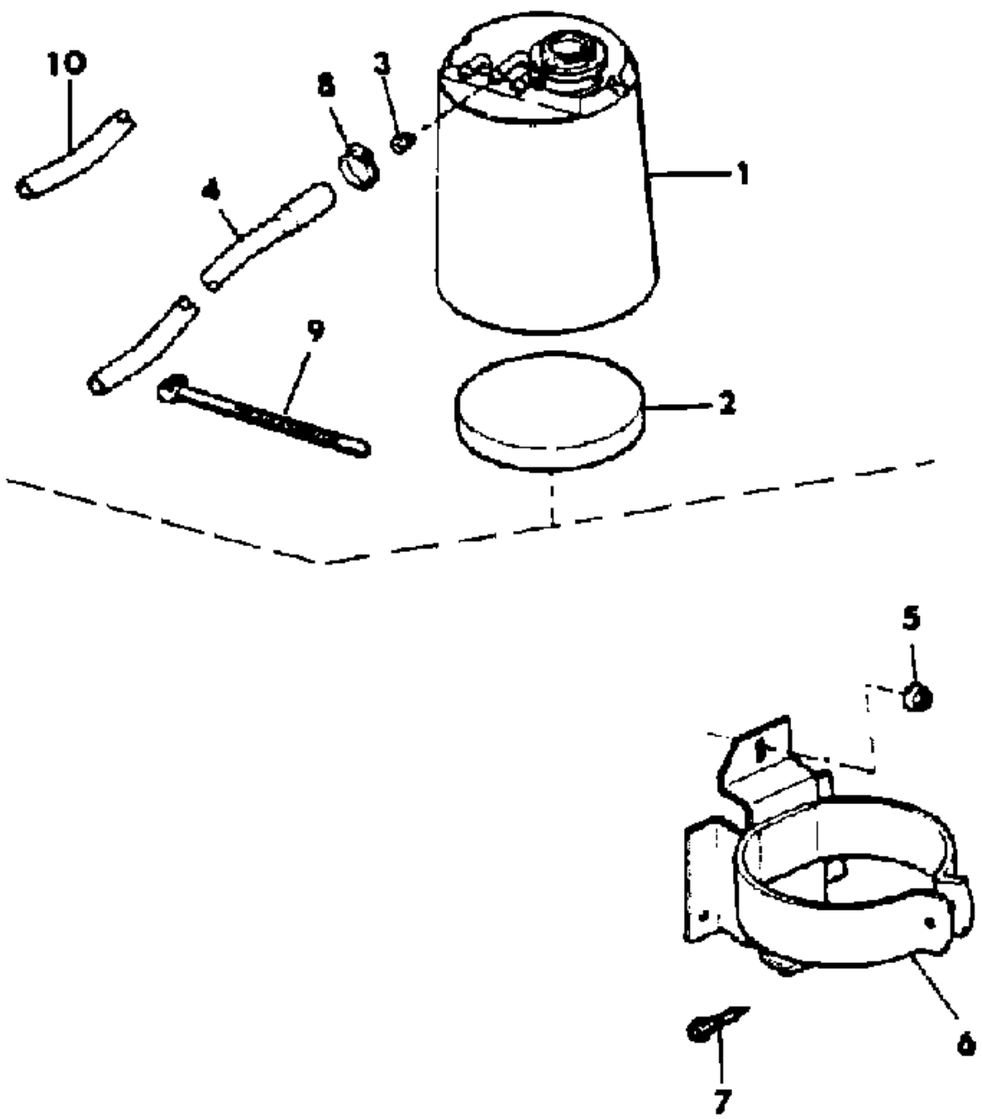

ITEM	PART NUMBER	QTY	BODY	MODEL	DESCRIPTION
1					CANISTER
					Four Cylinder
	J323 7477	1			1981-83 GM
	J323 2956	1			1983 AMC
	J323 9479	1			1984-86 AMC
					Six Cylinder
	J323 9479	1			1981-86
	J323 1916	1			1981-82: CANADA
	J323 1916	1			1981: EXPORT
	J323 1916	1			1982: EXPORT, without Japan
	J323 9479	1		87	1982-85: EXPORT, Japan
	J323 9479	1			1983-86: CANADA
	J323 1916	1		87,88	1983-85: EXPORT, Australian Design Rules, Economic
					Commission of Europe, Sweden, Switzerland
	J323 9479	1			1983-86: EXPORT, Non-Regulated Markets
	J323 1916	1		87,88	1986: EXPORT, Economic Commission of Europe
					Eight Cylinder
	J323 1916	1		85,87	1981
2	J322 7279	1			FILTER
3	J321 3949	1			PLUG, Metering
4	J322 5799	1			HOSE, Vent
5	J400 3018	2			NUT, Flange
6					BRACKET, Mounting
	J535 7214	1			1981-86
	J536 3619	1			1982-83: GM Four Cylinder
7	J942 0882	1			SCREW
8					CLAMP, Hose
	J319 7566	AR			7/16"
	J318 1643	AR			9/16"
	J321 9466	AR			3/4"
	J322 7850	AR			17/32"
	3300 0786	AR			3/8"
9	J322 3227	AR			STRAP, Hose Support
10					HOSE
	J812 5813	AR			Canister To Air Cleaner
	J812 5781	AR			Canister To Carburetor

MODEL CODES
16=Cherokee 2 Dr.(1981-83)
17=Cherokee 2 Dr.(1981-83)
73=Cherokee 2WD-2 Dr.(1984-86)
74=Cherokee 2WD-4 Dr.(1984-86)
18=Cherokee 4 Dr.(1981-83)
77=Cherokee 4WD-2 Dr.(1984-86)
78=Cherokee 4WD-4 Dr.(1984-86)
85=CJ-5 (1981-83)
86=CJ-6(1981)
87=CJ-7(1981-86)
88=CJ-8, Scrambler(1981-86)
64=Comanche 2WD-6 Ft. Box(1986)
66=Comanche 2WD-7 Ft. Box(1986)
63=Comanche 4WD-6 Ft. Box(1986)
65=Comanche 4WD-7 Ft. Box(1986)
15=Grand Wagoneer 4 Dr.(1984-86)
25=J-10 Truck 7 Ft. Box(1981-84)
26=J10 Truck 8 Ft. Box(1981-86)
27=J-20 Truck 8 Ft. Box(1981-86)
15=Wagoneer 4 Dr.(1981-83)
75=Wagoneer 4WD-4 Dr.(1984-86)

BODY
CJ=CJ-5, CJ-6, CJ-7, CJ-8, Scrambler(1981-86)
MJ=Comanche Pickup(1986)

STYLES
SJ=Wagoneer(1981-83), Grand Wagoneer(1984-86), Cherokee(1981-83), J-10, J-20(1981-86)
XJ=Wagoneer(1984-86), Cherokee(1984-86)

AR = Use as Required - = Non Illustrated Part P.A.R. = Paint as Required

« RETURN TO GROUP INDEX

VAPOR CANISTER XJ CHEROKEE, XJ WAGONEER, COMANCHE
Figure 25-2200

81J25 2200

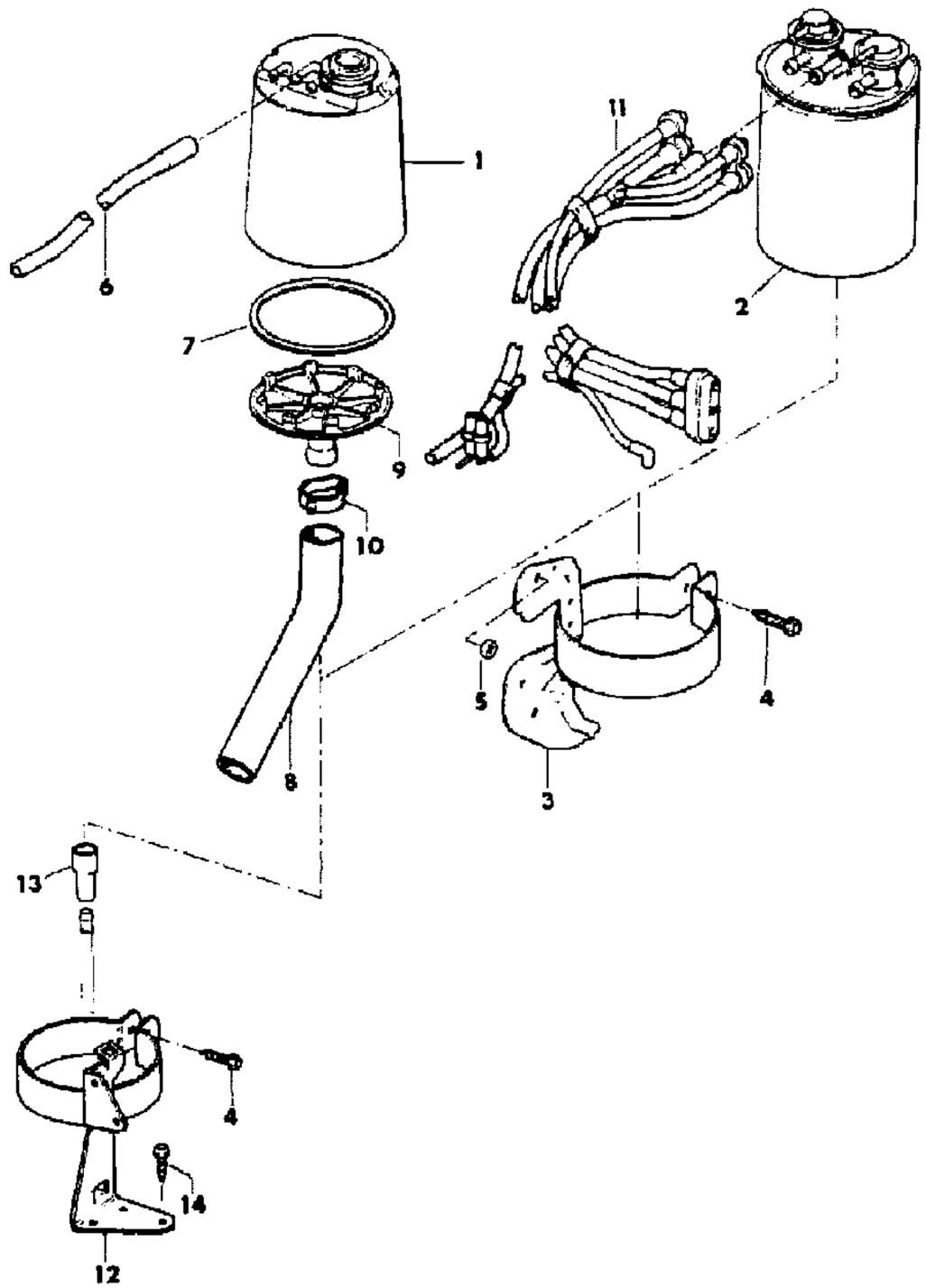

ITEM	PART NUMBER	QTY	BODY	MODEL	DESCRIPTION
1					CANISTER
					Four Cylinder
	J323 9479	1			1984-85
	3300 0056	1			1986
2					CANISTER
					Six Cylinder
	5300 1850	1			1984-86
3					BRACKET, Mounting
					Four Cylinder
	5300 1066	1			1984-85
					Six Cylinder
	5300 1849	1			1984-86
4	J942 0882	1			SCREW
5	1150 3739	3			NUT
6					HOSE
					Four Cylinder
	3300 0057	AR			1984
7					GASKET
					Four Cylinder
	3300 2496	1			1984-86
8					HOSE
					Four Cylinder
	3300 0876	AR			1984-85
9					CAP, Drain
	J323 3599	1			Four Cylinder
10					CLAMP
	J317 4254	1			Four Cylinder
11					HARNESS, Vacuum
	3300 2145	1			Six Cylinder
12					BRACKET, Mounting
					Four Cylinder
	5300 2469	1			1986
13					HOSE
					Four Cylinder
	5300 3071	AR			1986
14					SCREW
					Four Cylinder
	J941 5162	3			1986

MODEL CODES

16=Cherokee 2 Dr.(1981-83)	78=Cherokee 4WD-4 Dr.(1984-86)	64=Comanche 2WD-6 Ft. Box(1986)	25=J-10 Truck 7 Ft. Box(1981-84)
17=Cherokee 2 Dr.(1981-83)	85=CJ-5 (1981-83)	66=Comanche 2WD-7 Ft. Box(1986)	26=J10 Truck 8 Ft. Box(1981-86)
73=Cherokee 2WD-2 Dr.(1984-86)	86=CJ-6(1981)	63=Comanche 4WD-6 Ft. Box(1986)	27=J-20 Truck 8 Ft. Box(1981-86)
74=Cherokee 2WD-4 Dr.(1984-86)	87=CJ-7(1981-86)	65=Comanche 4WD-7 Ft. Box(1986)	15=Wagoneer 4 Dr.(1981-83)
18=Cherokee 4 Dr.(1981-83)	88=CJ-8, Scrambler(1981-86)	15=Grand Wagoneer 4 Dr.(1984-86)	75=Wagoneer 4WD-4 Dr.(1984-86)
77=Cherokee 4WD-2 Dr.(1984-86)			

BODY
CJ=CJ-5, CJ-6, CJ-7, CJ-8, Scrambler(1981-86)
MJ=Comanche Pickup(1986)

STYLES
SJ=Wagoneer(1981-83), Grand Wagoneer(1984-86), Cherokee(1981-83), J-10, J-20(1981-86)
XJ=Wagoneer(1984-86), Cherokee(1984-86)

AR = Use as Required - = Non Illustrated Part P.A.R. = Paint as Required

« RETURN TO GROUP INDEX

VAPOR CANISTER SJ CHEROKEE, SJ WAGONEER, J10, J20
Figure 25-2300

81J25 2300

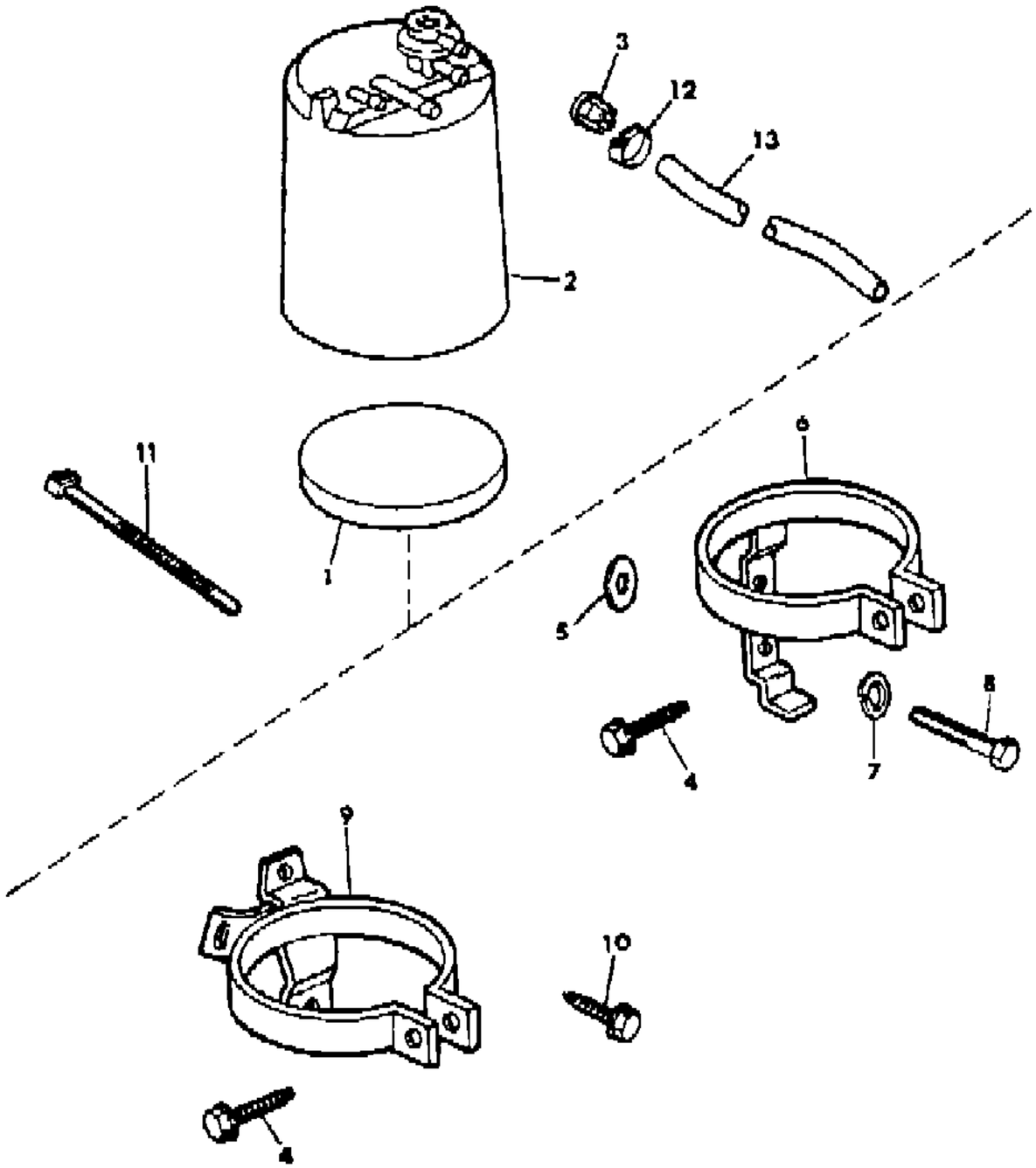

ITEM	PART NUMBER	QTY	BODY	MODEL	DESCRIPTION
1	J322 7279	1			FILTER
2					CANISTER
					Six Cylinder
	J323 1916	1			1981: CANADA
	J323 1916	1		25,26	1981-82: EXPORT, Economic Commission of Europe, Non-Regulated Markets, with Automatic Transmission, SJ Cherokee, SJ Wagoneer
	J323 1916	1			1981-82: EXPORT, Australian Design Rules, Economic Commission of Europe, Non-Regulated Markets, with Manual Transmission
	J323 9479	1			1981-86
	J323 9479	1			1982-86: CANADA
	J323 1916	1		25,26	1983: EXPORT, Economic Commission of Europe, SJ Cherokee, SJ Wagoneer
	J323 9479	1			1983: EXPORT, Non-Regulated Markets
	J323 1916	1		17,18,2	1983: EXPORT, Australian Design Rules, with Manual Transmission
	J323 1916	1		15,27	1984-86: EXPORT, Australian Design Rules, with Manual Transmission
	J323 1916	1		15,25,2	1984-86: EXPORT, Economic Commission of Europe, with Manual Transmission
	J323 1916	1		15	1985-86: EXPORT, Australian Design Rules, with Automatic Transmission
	J323 9479	1		15,25,2	1984-86: EXPORT, Non-Regulated Markets
					Eight Cylinder
	J323 2956	1			1981-83
	J323 1916	1		15,16,1	1981-83: CANADA
	J323 1916	1		25,26	1981-83: CANADA
	J323 2956	1		27	1981-83: CANADA
	J323 1916	1			1981-86: EXPORT, Australian Design Rules, Economic Commission of Europe, Non-Regulated Markets
	J323 2956	1		15,25,2	1984-85
	J323 9479	1		15,26	1986
	J323 9479	1		27	1986: Without US-California, with Automatic Transmission
3	J321 3949	1			PLUG, Metering
4	J942 0882	1			SCREW
5	J044 6188	2			WASHER
6					BRACKET, Mounting
	J535 4406	1			Six Cylinder

MODEL CODES

16=Cherokee 2 Dr.(1981-83)	78=Cherokee 4WD-4 Dr.(1984-86)	64=Comanche 2WD-6 Ft. Box(1986)	25=J-10 Truck 7 Ft. Box(1981-84)
17=Cherokee 2 Dr.(1981-83)	85=CJ-5 (1981-83)	66=Comanche 2WD-7 Ft. Box(1986)	26=J10 Truck 8 Ft. Box(1981-86)
73=Cherokee 2WD-2 Dr.(1984-86)	86=CJ-6(1981)	63=Comanche 4WD-6 Ft. Box(1986)	27=J-20 Truck 8 Ft. Box(1981-86)
74=Cherokee 2WD-4 Dr.(1984-86)	87=CJ-7(1981-86)	65=Comanche 4WD-7 Ft. Box(1986)	15=Wagoneer 4 Dr.(1981-83)
18=Cherokee 4 Dr.(1981-83)	88=CJ-8, Scrambler(1981-86)	15=Grand Wagoneer 4 Dr.(1984-86)	75=Wagoneer 4WD-4 Dr.(1984-86)
77=Cherokee 4WD-2 Dr.(1984-86)			

BODY
CJ=CJ-5, CJ-6, CJ-7, CJ-8, Scrambler(1981-86)
MJ=Comanche Pickup(1986)

STYLES
SJ=Wagoneer(1981-83), Grand Wagoneer(1984-86), Cherokee(1981-83), J-10, J-20(1981-86)
XJ=Wagoneer(1984-86), Cherokee(1984-86)

AR = Use as Required - = Non Illustrated Part P.A.R. = Paint as Required

« RETURN TO GROUP INDEX »

VAPOR CANISTER SJ CHEROKEE, SJ WAGONEER, J10, J20
Figure 25-2300

81J25 2300

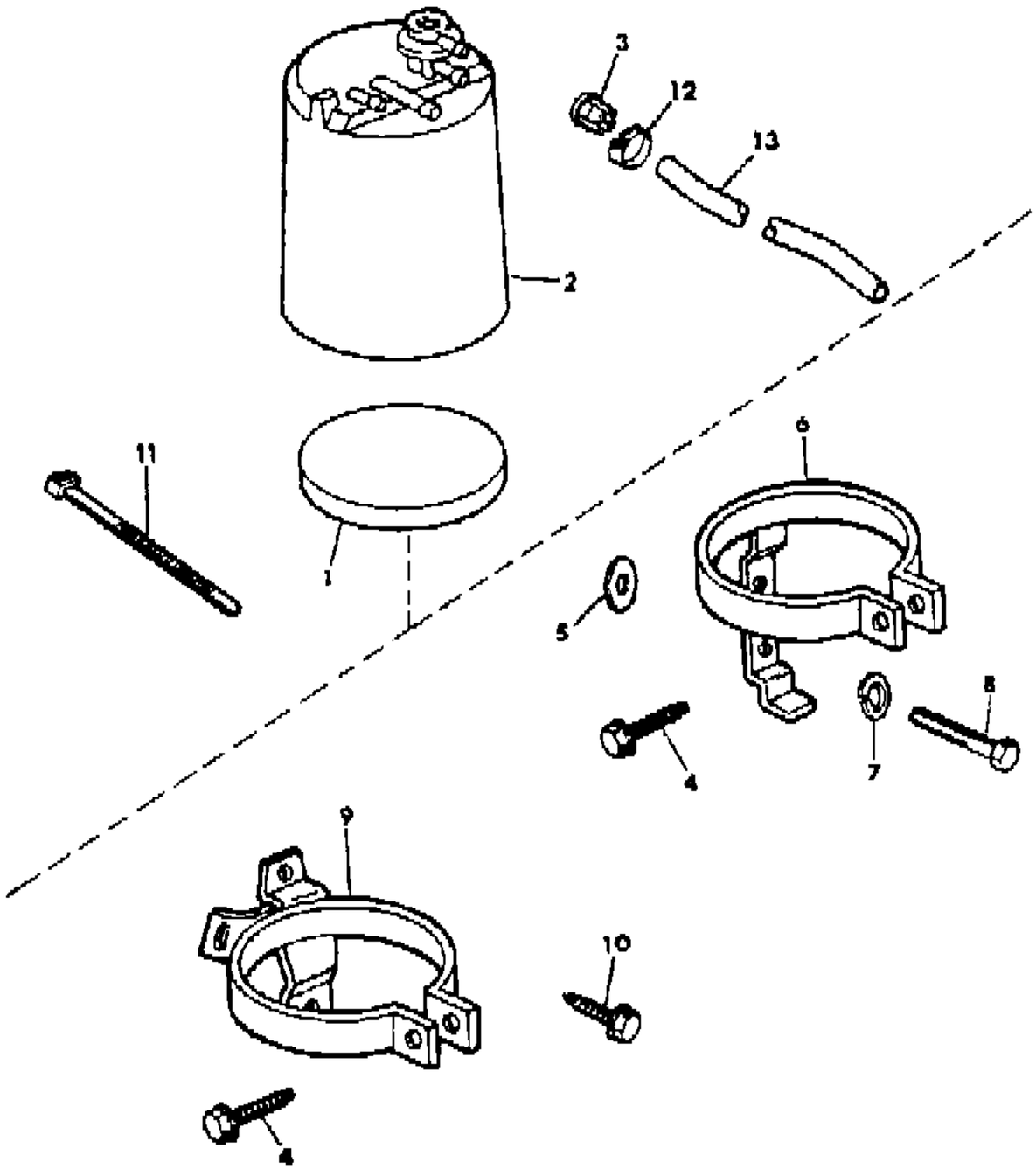

ITEM	PART NUMBER	QTY	BODY	MODEL	DESCRIPTION
7	J012 0380	2			WASHER, Lock
8	J018 0016	2			BOLT
9					BRACKET, Mounting
	J535 8524	1			Eight Cylinder
10	J400 5559	3			SCREW
11	J322 3227	AR			STRAP, Hose
12					CLAMP
	J319 7566	AR			7/16"
	J318 1643	AR			9/16"
	J321 9466	AR			3/4"
	J322 7850	AR			17/32"
	3300 0786	AR			3/8"
13					HOSE
	J535 0898	AR			Canister To Vent
	J812 5813	AR			Canister To Air Cleaner
	J812 5781	AR			Canister to Carburetor

MODEL CODES

16=Cherokee 2 Dr.(1981-83)
17=Cherokee 2 Dr.(1981-83)
73=Cherokee 2WD-2 Dr.(1984-86)
74=Cherokee 2WD-4 Dr.(1984-86)
18=Cherokee 4 Dr.(1981-83)
77=Cherokee 4WD-2 Dr.(1984-86)
78=Cherokee 4WD-4 Dr.(1984-86)
85=CJ-5 (1981-83)
86=CJ-6(1981)
87=CJ-7(1981-86)
88=CJ-8, Scrambler(1981-86)
64=Comanche 2WD-6 Ft. Box(1986)
66=Comanche 2WD-7 Ft. Box(1986)
63=Comanche 4WD-6 Ft. Box(1986)
65=Comanche 4WD-7 Ft. Box(1986)
15=Grand Wagoneer 4 Dr.(1984-86)
25=J-10 Truck 7 Ft. Box(1981-84)
26=J10 Truck 8 Ft. Box(1981-86)
27=J-20 Truck 8 Ft. Box(1981-86)
15=Wagoneer 4 Dr.(1981-83)
75=Wagoneer 4WD-4 Dr.(1984-86)

BODY

CJ=CJ-5, CJ-6, CJ-7, CJ-8, Scrambler(1981-86)
MJ=Comanche Pickup(1986)

STYLES

SJ=Wagoneer(1981-83), Grand Wagoneer(1984-86), Cherokee(1981-83), J-10, J-20(1981-86)
XJ=Wagoneer(1984-86), Cherokee(1984-86)

AR = Use as Required - = Non Illustrated Part P.A.R. = Paint as Required

« RETURN TO GROUP INDEX

PCV SYSTEM SIX CYLINDER CJ-5,6,7,8, SCRAMBLER
Figure 25-2400

81J25 2400

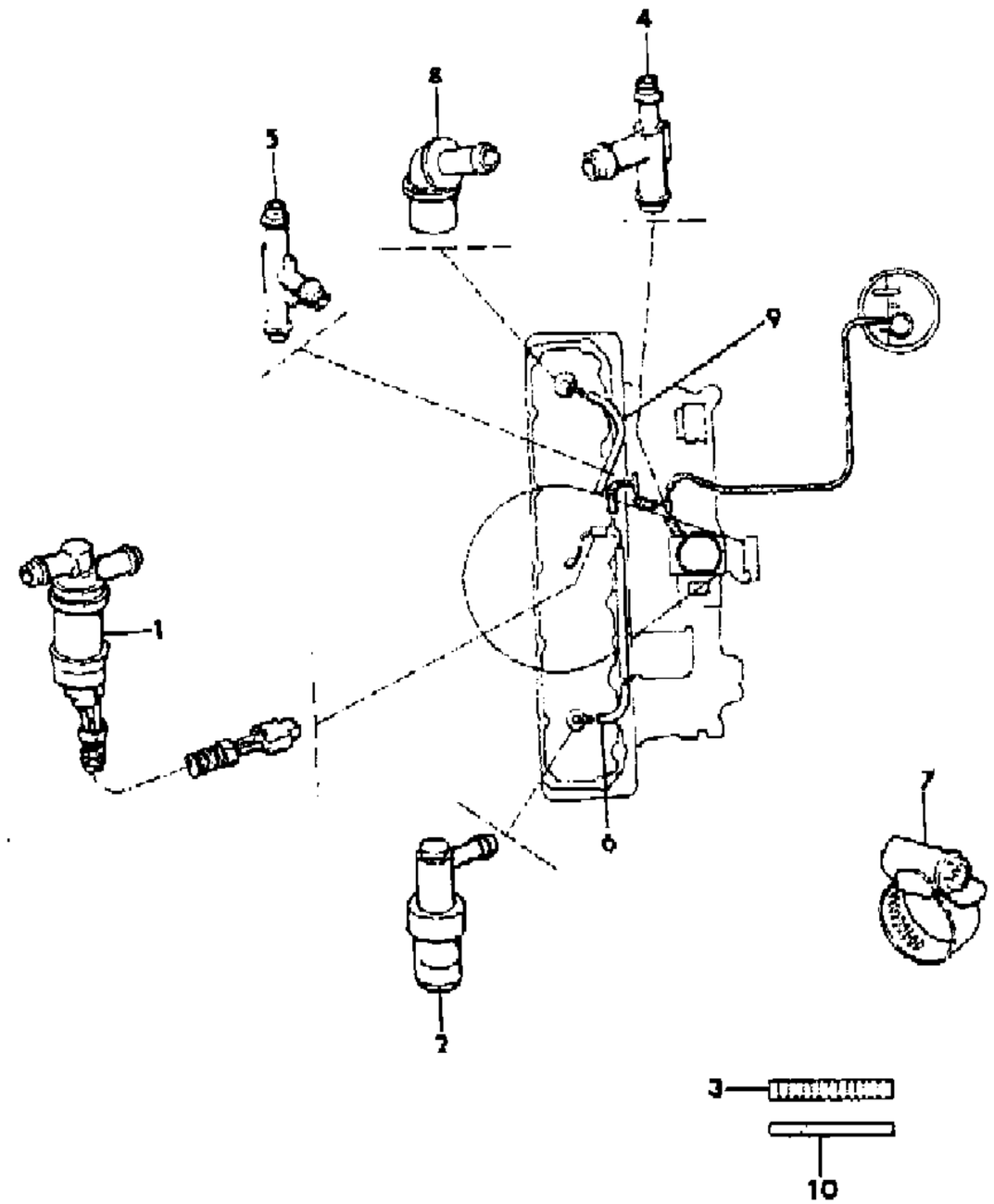

ITEM	PART NUMBER	QTY	BODY	MODEL	DESCRIPTION
1					VALVE, Solenoid
	3300 0722	1			1983-86
2					VALVE, PCV
	J324 0359	1			1981
	J324 1629	1			1982
	3300 0887	1			1983-86
3	J812 5781	1			HOSE, Bulk
4	J323 9686	1			TEE
5	J323 7497	1			TEE
6					HOSE
	3300 0721	AR			Modification Required
7					CLAMP, Hose
	3300 0784	AR			.69" To .97"
	3300 0785	AR			.47" To .78"
	3300 0786	AR			.28" To .59"
8	J323 6685	1			ELBOW
9					HOSE
	J323 9555	1			With Power Brakes
	J323 9814	1			Without Power Brakes
10	8330 0080	AR			HOSE, Bulk

MODEL CODES

16=Cherokee 2 Dr.(1981-83)
17=Cherokee 2 Dr.(1981-83)
73=Cherokee 2WD-2 Dr.(1984-86)
74=Cherokee 2WD-4 Dr.(1984-86)
18=Cherokee 4 Dr.(1981-83)
77=Cherokee 4WD-2 Dr.(1984-86)
78=Cherokee 4WD-4 Dr.(1984-86)
85=CJ-5 (1981-83)
86=CJ-6(1981)
87=CJ-7(1981-86)
88=CJ-8, Scrambler(1981-86)
64=Comanche 2WD-6 Ft. Box(1986)
66=Comanche 2WD-7 Ft. Box(1986)
63=Comanche 4WD-6 Ft. Box(1986)
65=Comanche 4WD-7 Ft. Box(1986)
15=Grand Wagoneer 4 Dr.(1984-86)
25=J-10 Truck 7 Ft. Box(1981-84)
26=J10 Truck 8 Ft. Box(1981-86)
27=J-20 Truck 8 Ft. Box(1981-86)
15=Wagoneer 4 Dr.(1981-83)
75=Wagoneer 4WD-4 Dr.(1984-86)

BODY
CJ=CJ-5, CJ-6, CJ-7, CJ-8, Scrambler(1981-86)
MJ=Comanche Pickup(1986)

STYLES
SJ=Wagoneer(1981-83), Grand Wagoneer(1984-86), Cherokee(1981-83), J-10, J-20(1981-86)
XJ=Wagoneer(1984-86), Cherokee(1984-86)

AR = Use as Required - = Non Illustrated Part P.A.R. = Paint as Required

« RETURN TO GROUP INDEX

PCV SYSTEM, 1984-85 FOUR CYLINDER, GAS XJ CHEROKEE, XJ WAGONEER
Figure 25-2500

81J25 2500

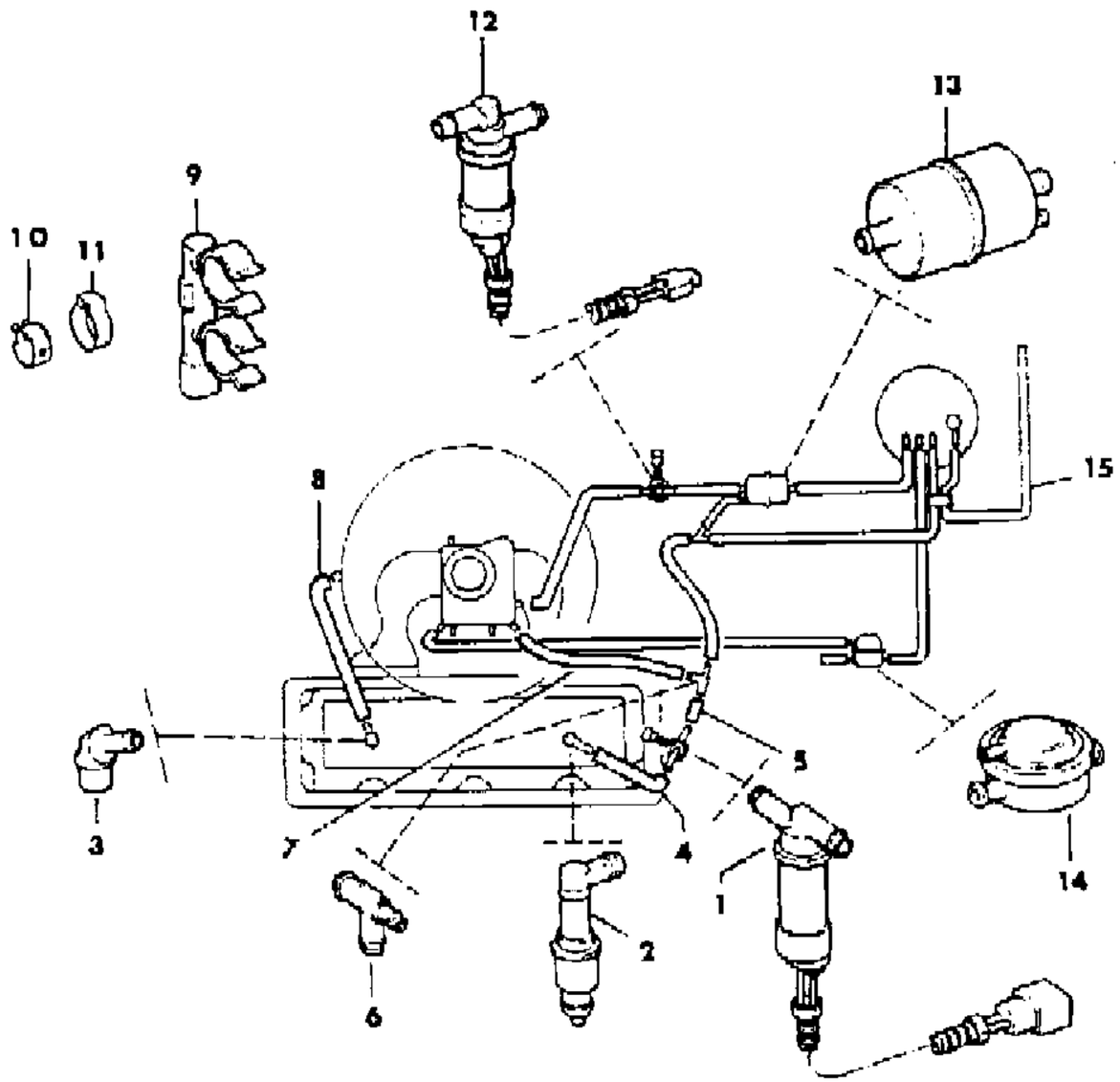

ITEM	PART NUMBER	QTY	BODY	MODEL	DESCRIPTION
1	3300 0722	1			VALVE, Solenoid
2	J813 2309	1			VALVE, PCV
3	J323 6685	1			ELBOW
4					HOSE
	3300 1637	1			Without Non-Regulated Markets
	5300 1821	1			EXPORT, Non-Regulated Markets
5	3300 1638	1			HOSE
6	3420 1741	1			TEE
7	3300 1639	1			HOSE
8	5300 0611	1			HOSE
9	3300 1640	1			BRACKET, Support
10	J321 9466	AR			CLAMP, Hose
11	J317 4254	AR			CLAMP, Hose
12	5300 0848	1			VALVE, Solenoid
13	3300 1586	1			TRAP, Liquid ***
14					VALVE, Pressure Control
	5300 2713	1			1985
15					HARNESS, Emissions
	3300 2186	1			1984
	5300 2702	1			1985

MODEL CODES

16=Cherokee 2 Dr.(1981-83)
17=Cherokee 2 Dr.(1981-83)
73=Cherokee 2WD-2 Dr.(1984-86)
74=Cherokee 2WD-4 Dr.(1984-86)
18=Cherokee 4 Dr.(1981-83)
77=Cherokee 4WD-2 Dr.(1984-86)
78=Cherokee 4WD-4 Dr.(1984-86)
85=CJ-5 (1981-83)
86=CJ-6(1981)
87=CJ-7(1981-86)
88=CJ-8, Scrambler(1981-86)
64=Comanche 2WD-6 Ft. Box(1986)
66=Comanche 2WD-7 Ft. Box(1986)
63=Comanche 4WD-6 Ft. Box(1986)
65=Comanche 4WD-7 Ft. Box(1986)
15=Grand Wagoneer 4 Dr.(1984-86)
25=J-10 Truck 7 Ft. Box(1981-84)
26=J10 Truck 8 Ft. Box(1981-86)
27=J-20 Truck 8 Ft. Box(1981-86)
15=Wagoneer 4 Dr.(1981-83)
75=Wagoneer 4WD-4 Dr.(1984-86)

BODY
CJ=CJ-5, CJ-6, CJ-7, CJ-8, Scrambler(1981-86)
MJ=Comanche Pickup(1986)

STYLES
SJ=Wagoneer(1981-83), Grand Wagoneer(1984-86), Cherokee(1981-83), J-10, J-20(1981-86)
XJ=Wagoneer(1984-86), Cherokee(1984-86)

AR = Use as Required - = Non Illustrated Part P.A.R. = Paint as Required

« RETURN TO GROUP INDEX

PCV SYSTEM, 1986 FOUR CYLINDER, GAS, CARBURETED XJ CHEROKEE, XJ WAGONEER, COMANCHE
Figure 25-2600

81J25 2600

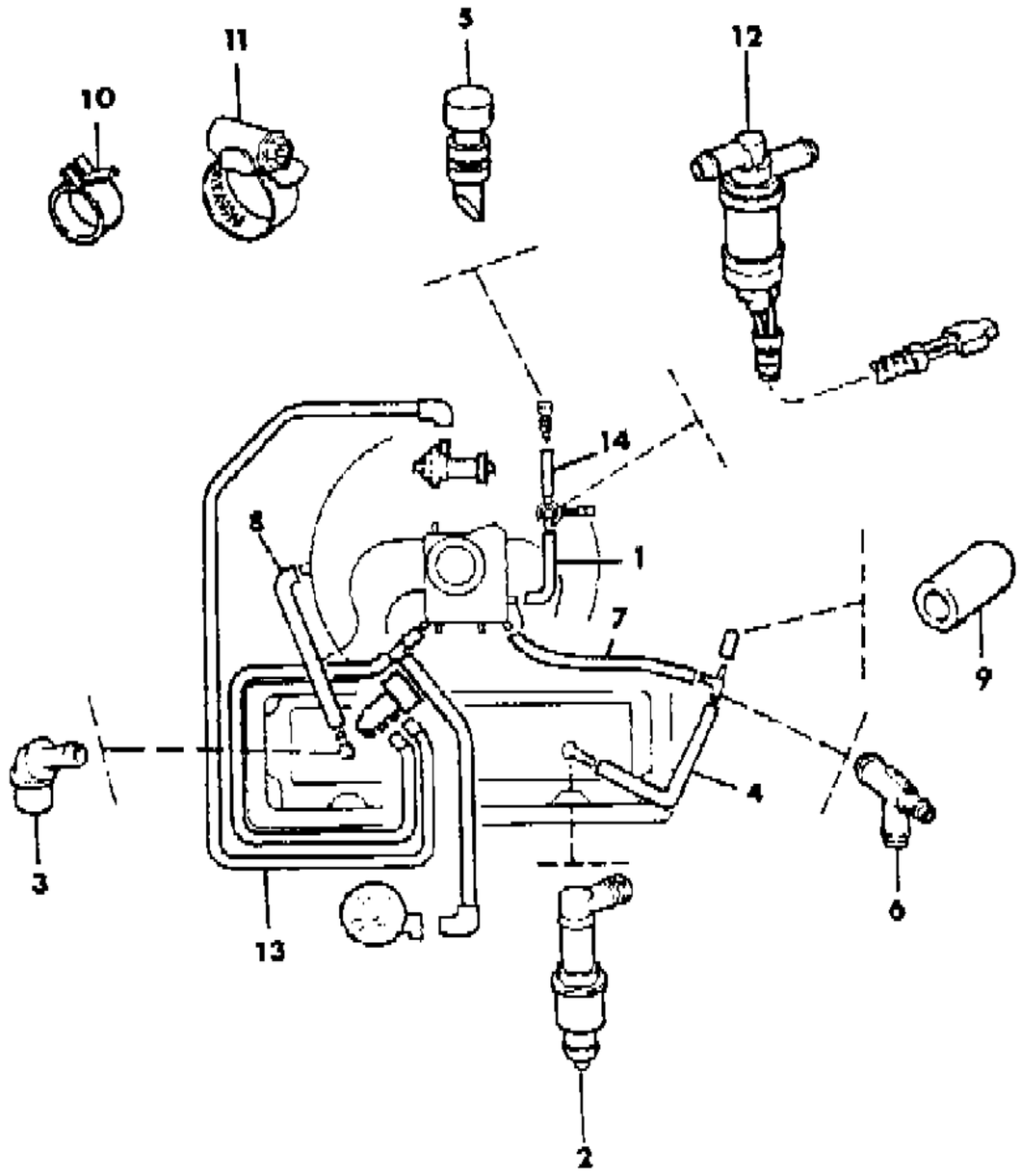

ITEM	PART NUMBER	QTY	BODY	MODEL	DESCRIPTION
1	J812 5781	AR			HOSE, Bulk
2	J813 2309	1			VALVE, PCV
3	J323 6685	1			ELBOW
4	5300 1821	1			HOSE
5	J535 2955	1			CAP, Vent
6	3420 1741	1			TEE
7	3300 1639	1			HOSE
8	5300 0611	1			HOSE
9	J323 8283	1			CAP
10	J321 9466	AR			CLAMP, Hose
11	J320 3076	AR			CLAMP, Hose
12	5300 0848	1			VALVE, Solenoid
13	5300 1847	1			HARNESS, Vacuum
14	J812 5781	AR			HOSE, Bulk

MODEL CODES
16=Cherokee 2 Dr.(1981-83)
17=Cherokee 2 Dr.(1981-83)
73=Cherokee 2WD-2 Dr.(1984-86)
74=Cherokee 2WD-4 Dr.(1984-86)
18=Cherokee 4 Dr.(1981-83)
77=Cherokee 4WD-2 Dr.(1984-86)
78=Cherokee 4WD-4 Dr.(1984-86)
85=CJ-5 (1981-83)
86=CJ-6(1981)
87=CJ-7(1981-86)
88=CJ-8, Scrambler(1981-86)
64=Comanche 2WD-6 Ft. Box(1986)
66=Comanche 2WD-7 Ft. Box(1986)
63=Comanche 4WD-6 Ft. Box(1986)
65=Comanche 4WD-7 Ft. Box(1986)
15=Grand Wagoneer 4 Dr.(1984-86)
25=J-10 Truck 7 Ft. Box(1981-84)
26=J10 Truck 8 Ft. Box(1981-86)
27=J-20 Truck 8 Ft. Box(1981-86)
15=Wagoneer 4 Dr.(1981-83)
75=Wagoneer 4WD-4 Dr.(1984-86)

BODY
CJ=CJ-5, CJ-6, CJ-7, CJ-8, Scrambler(1981-86)
MJ=Comanche Pickup(1986)

STYLES
SJ=Wagoneer(1981-83), Grand Wagoneer(1984-86), Cherokee(1981-83), J-10, J-20(1981-86)
XJ=Wagoneer(1984-86), Cherokee(1984-86)

AR = Use as Required - = Non Illustrated Part P.A.R. = Paint as Required

« RETURN TO GROUP INDEX

PCV SYSTEM SIX CYLINDER SJ CHEROKEE, SJ WAGONEER, J10, J20
Figure 25-2700

81J25 2 700

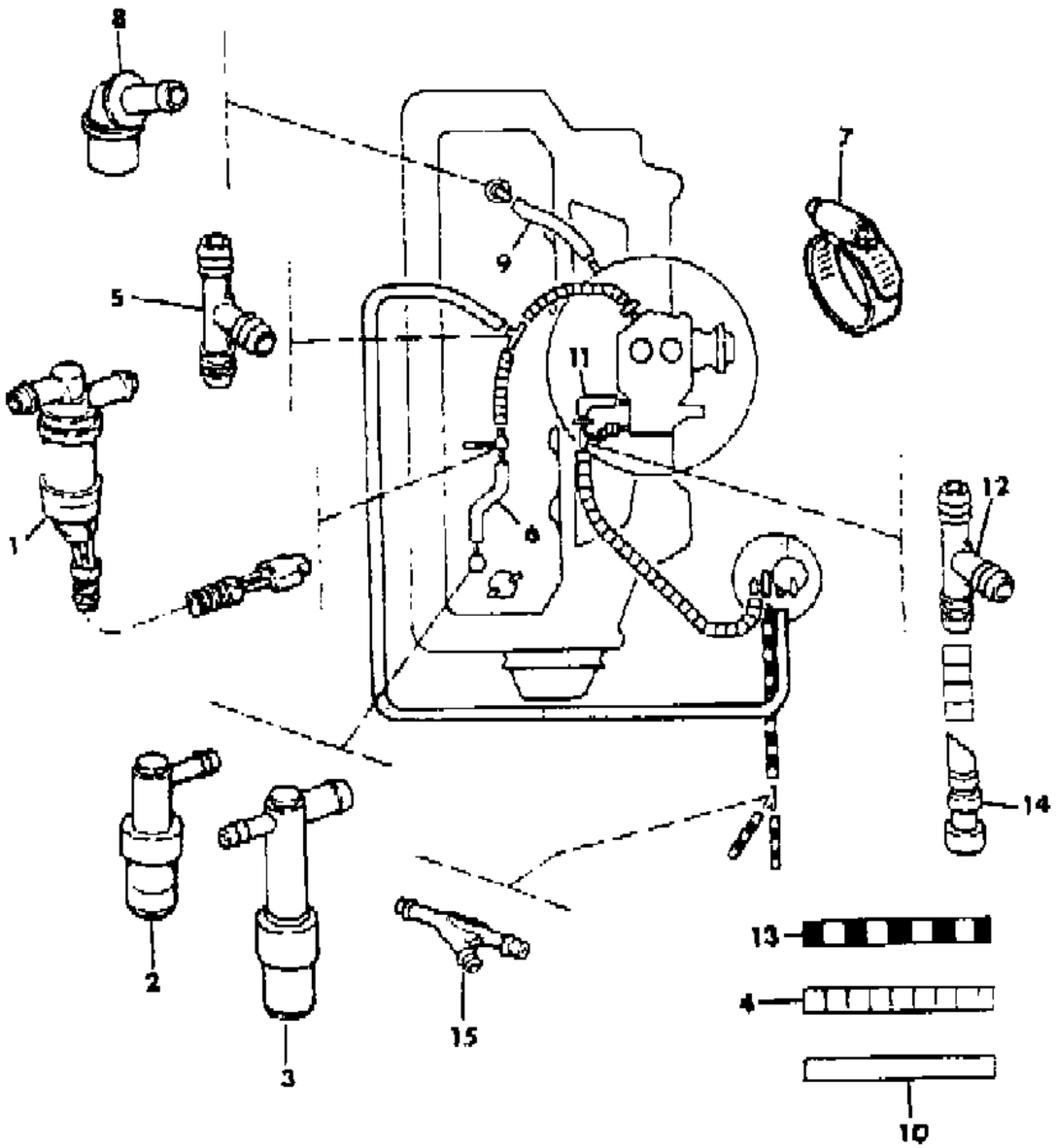

ITEM	PART NUMBER	QTY	BODY	MODEL	DESCRIPTION
1	3300 0722	1			VALVE, Solenoid
2	3300 0887	1			VALVE, PCV
3	J323 9068	1			VALVE, PCV
4	J812 5781	AR			HOSE, Bulk
5					TEE
	J323 9686	1			US-49 States, CANADA
	J323 7497	1			US-California
6					HOSE
	3300 0721	1			
	J812 5781	AR			EXPORT, Non-Regulated Markets, Bulk
7					CLAMP, Hose
	3300 0784	AR			.67" To .98"
	3300 0785	AR			.47" To .78"
	3300 0786	AR			.28" To .59"
8	J323 6685	1			ELBOW
9	J323 9814	1			HOSE
10	8350 1904	AR			HOSE, Bulk
11	J323 2942	1			HOSE
12	J323 2983	1			TEE
13	J812 5814	AR			HOSE, Bulk
14					CAP, Vent
	J535 2955	1			EXPORT, Non-Regulated Markets ***
15					CONNECTOR, Y
	J400 6848	1		15	EXPORT, Non-Regulated Markets

MODEL CODES

16=Cherokee 2 Dr.(1981-83)	78=Cherokee 4WD-4 Dr.(1984-86)	64=Comanche 2WD-6 Ft. Box(1986)	25=J-10 Truck 7 Ft. Box(1981-84)
17=Cherokee 2 Dr.(1981-83)	85=CJ-5 (1981-83)	66=Comanche 2WD-7 Ft. Box(1986)	26=J10 Truck 8 Ft. Box(1981-86)
73=Cherokee 2WD-2 Dr.(1984-86)	86=CJ-6(1981)	63=Comanche 4WD-6 Ft. Box(1986)	27=J-20 Truck 8 Ft. Box(1981-86)
74=Cherokee 2WD-4 Dr.(1984-86)	87=CJ-7(1981-86)	65=Comanche 4WD-7 Ft. Box(1986)	15=Wagoneer 4 Dr.(1981-83)
18=Cherokee 4 Dr.(1981-83)	88=CJ-8, Scrambler(1981-86)	15=Grand Wagoneer 4 Dr.(1984-86)	75=Wagoneer 4WD-4 Dr.(1984-86)
77=Cherokee 4WD-2 Dr.(1984-86)			

BODY
CJ=CJ-5, CJ-6, CJ-7, CJ-8, Scrambler(1981-86)
MJ=Comanche Pickup(1986)

STYLES
SJ=Wagoneer(1981-83), Grand Wagoneer(1984-86), Cherokee(1981-83), J-10, J-20(1981-86)
XJ=Wagoneer(1984-86), Cherokee(1984-86)

AR = Use as Required - = Non Illustrated Part P.A.R. = Paint as Required

« RETURN TO GROUP INDEX

PCV SYSTEM EIGHT CYLINDER SJ CHEROKEE, SJ WAGONEER, J10, J20
Figure 25-2800

81J25 2800

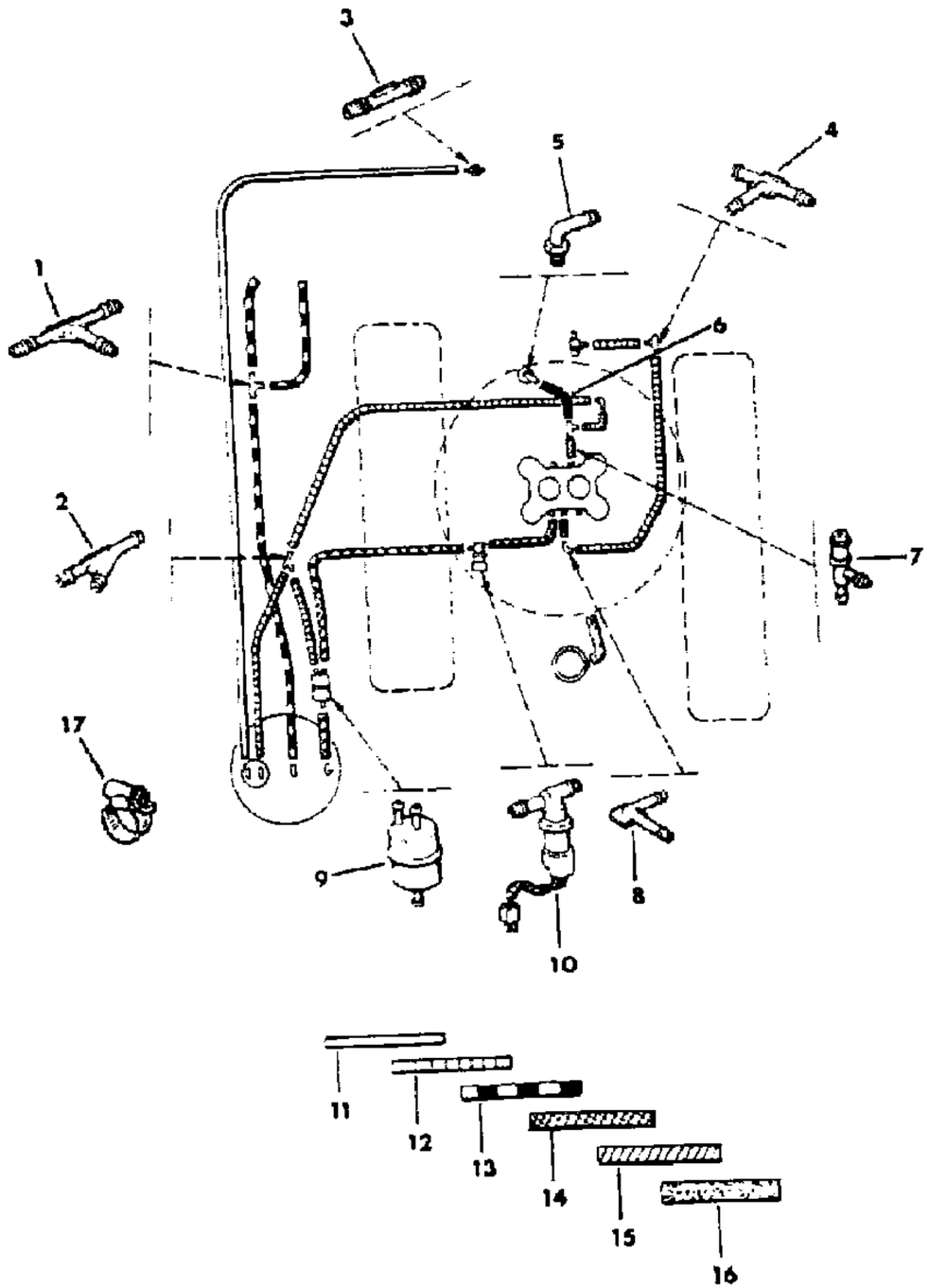

ITEM	PART NUMBER	QTY	BODY	MODEL	DESCRIPTION
1	J400 6635	1		15	CONNECTOR, Tee
2	J400 6848	1			CONNECTOR, Y
3	J322 0180	1			CONNECTOR
4	J323 2982	1			CONNECTOR, Tee
5	J323 4264	1			TUBE ASSEMBLY, PCV ***
6	J323 4267	1			HOSE
7	J323 4216	1			VALVE, PCV
8	3300 2356	2			ELBOW, 90 Degree
9	3300 1586	1			TRAP, Liquid ***
10	5300 0848	1			VALVE, Solenoid
11	8330 0079	1			HOSE, Bulk
12	8330 0080	AR			HOSE, Bulk
13	J535 0898	AR			HOSE, Bulk
14	J812 5883	AR			HOSE, Bulk
15	J812 5781	AR			HOSE, Bulk
16	J812 5841	AR			HOSE, Bulk
17					CLAMP, Hose
	3300 0784	AR			.67" Thru .98"
	3300 0785	AR			.47" Thru .78"

MODEL CODES

16=Cherokee 2 Dr.(1981-83)
17=Cherokee 2 Dr.(1981-83)
73=Cherokee 2WD-2 Dr.(1984-86)
74=Cherokee 2WD-4 Dr.(1984-86)
18=Cherokee 4 Dr.(1981-83)
77=Cherokee 4WD-2 Dr.(1984-86)
78=Cherokee 4WD-4 Dr.(1984-86)
85=CJ-5 (1981-83)
86=CJ-6(1981)
87=CJ-7(1981-86)
88=CJ-8, Scrambler(1981-86)
64=Comanche 2WD-6 Ft. Box(1986)
66=Comanche 2WD-7 Ft. Box(1986)
63=Comanche 4WD-6 Ft. Box(1986)
65=Comanche 4WD-7 Ft. Box(1986)
15=Grand Wagoneer 4 Dr.(1984-86)
25=J-10 Truck 7 Ft. Box(1981-84)
26=J10 Truck 8 Ft. Box(1981-86)
27=J-20 Truck 8 Ft. Box(1981-86)
15=Wagoneer 4 Dr.(1981-83)
75=Wagoneer 4WD-4 Dr.(1984-86)

BODY
CJ=CJ-5, CJ-6, CJ-7, CJ-8, Scrambler(1981-86)
MJ=Comanche Pickup(1986)

STYLES
SJ=Wagoneer(1981-83), Grand Wagoneer(1984-86), Cherokee(1981-83), J-10, J-20(1981-86)
XJ=Wagoneer(1984-86), Cherokee(1984-86)

AR = Use as Required - = Non Illustrated Part P.A.R. = Paint as Required

« RETURN TO GROUP INDEX

ILLUSTRATION NOT AVAILABLE AT TIME OF PUBLICATION

GROUP 46 - CJ INTERIOR TRIM

ILLUSTRATION TITLE	GROUP-FIG. NO.
INSULATION CJ-5,6,7,8, SCRAMBLER	Fig. 46-100
HEADLINING AND UPPER TRIM MOULDINGS WITH PLASTIC TOP ENCLOSURE CJ-7 LIMITED, 1982	Fig. 46-200
HEADLINING AND UPPER TRIM MOULDINGS WORLD CAB, EXPORT CJ-7,8	Fig. 46-300
SUNVISORS CJ-5,6,7,8, SCRAMBLER	Fig. 46-400
CARPETS AND INTERIOR TRIM PANELS WITHOUT EXPORT CJ-5,6,7,8, SCRAMBLER	Fig. 46-500
CARPETS AND INTERIOR TRIM PANELS EXPORT, WITH WORLD CAB CJ-7,8	Fig. 46-600
CARPETS EXPORT, WITHOUT WORLD CAB CJ-5,7,8	Fig. 46-700
DOOR TRIM PANELS FULL HARD DOORS, WITHOUT WORLD CAB CJ-5,6,7,8, SCRAMBLER	Fig. 46-800
DOOR TRIM PANELS FULL HARD DOORS, WITH WORLD CAB, EXPORT CJ -7,8	Fig. 46-900
FRAME AND PAD FRONT BUCKET SEAT CJ-5,6,7,8, SCRAMBLER	Fig. 46-1000
FRAME AND PAD FRONT 1/3-2/3 SEAT, EXPORT CJ-5,6,7,8	Fig. 46-1100
COVERS, FRONT SEAT UPHOLSTERY HIGH BACK BUCKET SEATS CJ-5,6,7,8, SCRAMBLER	Fig. 46-1200
COVERS, FRONT SEAT UPHOLSTERY LOW BACK BUCKET SEATS CJ-5,6,7,8, SCRAMBLER	Fig. 46-1300
COVERS, FRONT SEAT UPHOLSTERY 1/3-2/3 SEATS CJ-5,6,7,8, SCRAMBLER	Fig. 46-1400
FRAME AND PAD REAR FIXED SEAT CJ-5,6,7,8, SCRAMBLER	Fig. 46-1500
FRAME AND PAD REAR FOLD AND TUMBLE SEAT CJ-5,6,7,8, SCRAMBLER	Fig. 46-1600
FRAME AND PAD REAR LONGITUDINAL SEAT, EXPORT CJ-8 WITHOUT WORLD CAB	Fig. 46-1700
FRAME AND PAD REAR LONGITUDINAL SEAT CJ-7,8 WITH WORLD CAB	Fig. 46-1800
COVERS, REAR SEAT UPHOSTERY WITH FIXED REAR SEAT CJ-5,6,7,8, SCRAMBLER	Fig. 46-1900
COVERS, REAR SEAT UPHOLSTERY WITH FOLD AND TUMBLE SEAT CJ-5,6,7,8, SCRAMBLER	Fig. 46-2000
COVERS, REAR SEAT UPHOLSTERY WITH LONGITUDINAL SEAT, EXPORT CJ-5,6,7,8	Fig. 46-2100
TRACKS FRONT BUCKET SEAT CJ-5,6,7,8, SCRAMBLER	Fig. 46-2200
TRACKS FRONT 1/3-2/3 SEAT, EXPORT CJ-5,6,7,8	Fig. 46-2300
SEAT BELTS CJ-5,6,7,8, SCRAMBLER	Fig. 46-2400

INSULATION CJ-5,6,7,8, SCRAMBLER
Figure 46-100

87J 046 100

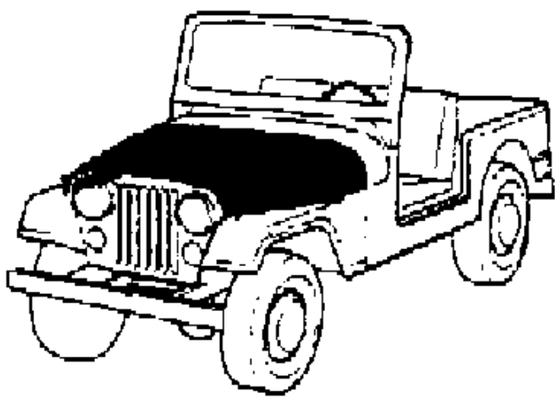

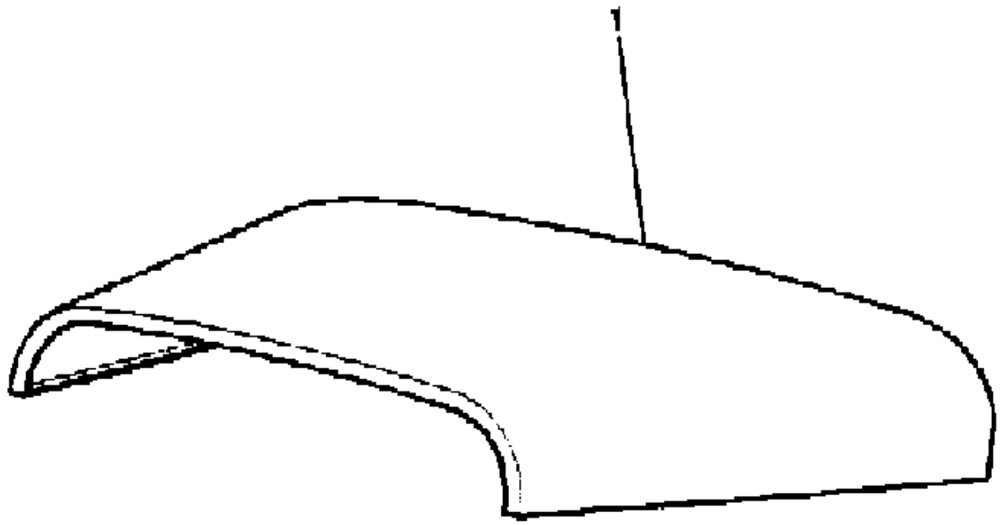

ITEM	PART NUMBER	QTY	BODY	MODEL	DESCRIPTION
1	J546 5058	1			INSULATION, Hood

MODEL CODES

16=Cherokee 2 Dr.(1981-83)	78=Cherokee 4WD-4 Dr.(1984-86)	64=Comanche 2WD-6 Ft. Box(1986)	25=J-10 Truck 7 Ft. Box(1981-84)
17=Cherokee 2 Dr.(1981-83)	85=CJ-5 (1981-83)	66=Comanche 2WD-7 Ft. Box(1986)	26=J10 Truck 8 Ft. Box(1981-86)
73=Cherokee 2WD-2 Dr.(1984-86)	86=CJ-6(1981)	63=Comanche 4WD-6 Ft. Box(1986)	27=J-20 Truck 8 Ft. Box(1981-86)
74=Cherokee 2WD-4 Dr.(1984-86)	87=CJ-7(1981-86)	65=Comanche 4WD-7 Ft. Box(1986)	15=Wagoneer 4 Dr.(1981-83)
18=Cherokee 4 Dr.(1981-83)	88=CJ-8, Scrambler(1981-86)	15=Grand Wagoneer 4 Dr.(1984-86)	75=Wagoneer 4WD-4 Dr.(1984-86)
77=Cherokee 4WD-2 Dr.(1984-86)			

BODY
CJ=CJ-5, CJ-6, CJ-7, CJ-8, Scrambler(1981-86)
MJ=Comanche Pickup(1986)

STYLES
SJ=Wagoneer(1981-83), Grand Wagoneer(1984-86), Cherokee(1981-83), J-10, J-20(1981-86)
XJ=Wagoneer(1984-86), Cherokee(1984-86)

AR = Use as Required - = Non Illustrated Part P.A.R. = Paint as Required

« RETURN TO GROUP INDEX

HEADLINING AND UPPER TRIM MOULDINGS WITH PLASTIC TOP ENCLOSURE CJ-7 LIMITED, 1982
Figure 46-200

81J 046 200

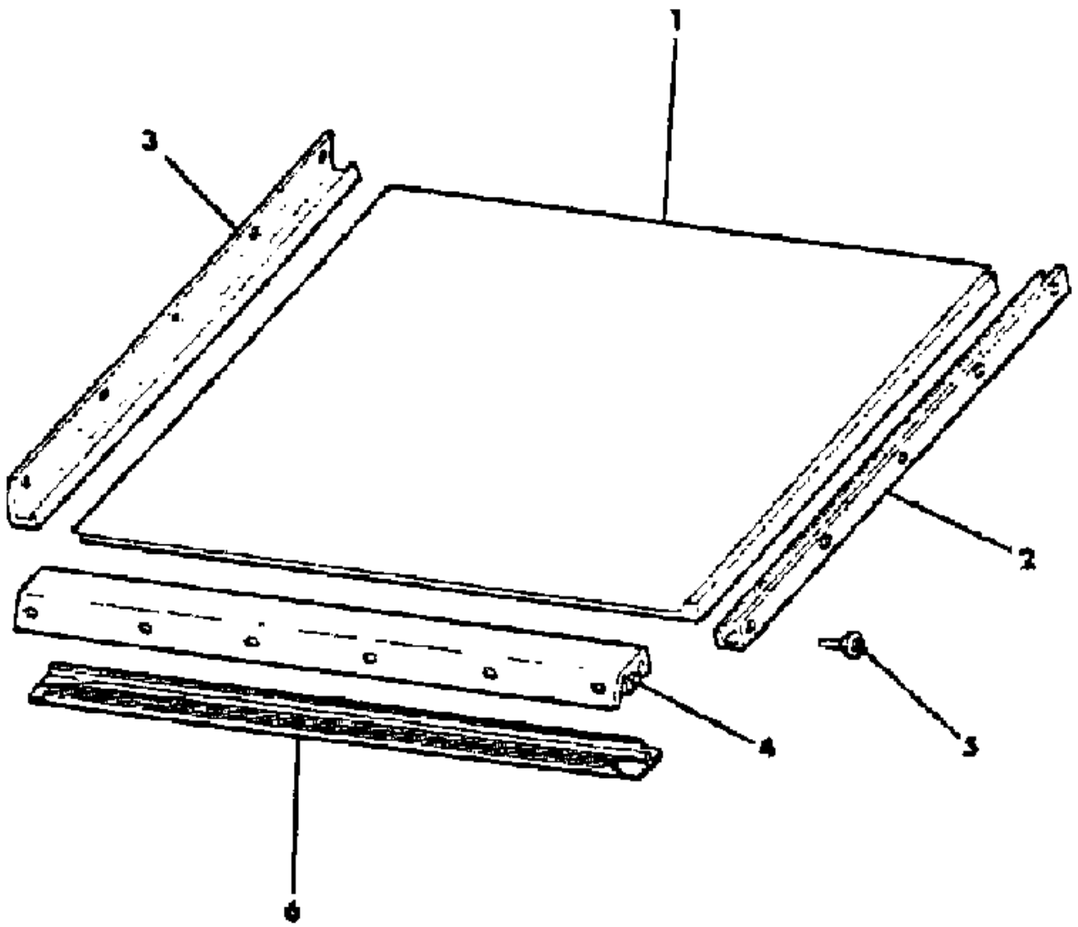

ITEM	PART NUMBER	QTY	BODY	MODEL	DESCRIPTION
1					HEADLINING ***
					Western Weave Pattern
	J576 1867	1			Blue
	J576 1868	1			Nutmeg
					Plain Pattern
	J576 3359	1			Blue
	J576 3360	1			Nutmeg
2	J576 1842	1			MOULDING, Header
3	J576 1843	1			MOULDING, Rear Garnish
4	J576 1844	2			RETAINER
5	J400 7047	30			SCREW
6					MOULDING, Headlining
	J576 1846	1			Right
	J576 1845	1			Left

MODEL CODES
16=Cherokee 2 Dr.(1981-83)
17=Cherokee 2 Dr.(1981-83)
73=Cherokee 2WD-2 Dr.(1984-86)
74=Cherokee 2WD-4 Dr.(1984-86)
18=Cherokee 4 Dr.(1981-83)
77=Cherokee 4WD-2 Dr.(1984-86)
78=Cherokee 4WD-4 Dr.(1984-86)
85=CJ-5 (1981-83)
86=CJ-6(1981)
87=CJ-7(1981-86)
88=CJ-8, Scrambler(1981-86)
64=Comanche 2WD-6 Ft. Box(1986)
66=Comanche 2WD-7 Ft. Box(1986)
63=Comanche 4WD-6 Ft. Box(1986)
65=Comanche 4WD-7 Ft. Box(1986)
15=Grand Wagoneer 4 Dr.(1984-86)
25=J-10 Truck 7 Ft. Box(1981-84)
26=J10 Truck 8 Ft. Box(1981-86)
27=J-20 Truck 8 Ft. Box(1981-86)
15=Wagoneer 4 Dr.(1981-83)
75=Wagoneer 4WD-4 Dr.(1984-86)

BODY
CJ=CJ-5, CJ-6, CJ-7, CJ-8, Scrambler(1981-86)
MJ=Comanche Pickup(1986)

STYLES
SJ=Wagoneer(1981-83), Grand Wagoneer(1984-86), Cherokee(1981-83), J-10, J-20(1981-86)
XJ=Wagoneer(1984-86), Cherokee(1984-86)

AR = Use as Required - = Non Illustrated Part P.A.R. = Paint as Required

« RETURN TO GROUP INDEX

HEADLINING AND UPPER TRIM MOULDINGS WORLD CAB, EXPORT CJ-7,8
Figure 46-300

81J 046 300

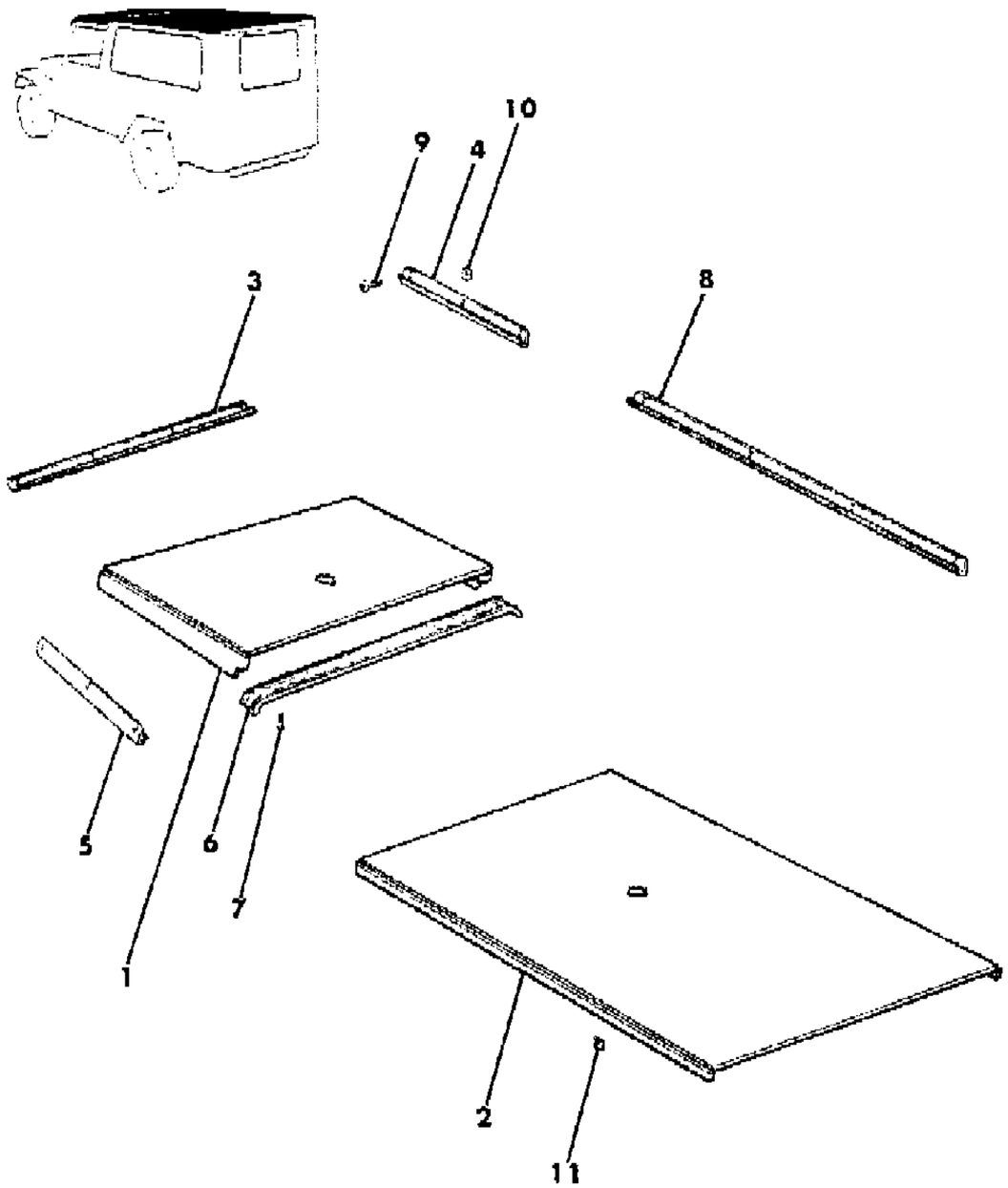

ITEM	PART NUMBER	QTY	BODY	MODEL	DESCRIPTION
1					HEADLINING ***
	9500 0043	1			Almond, For Deluxe Model
	J805 2322	1			Beige, For Deluxe Model
	J805 2323	1			Beige, For Standard Model
	J805 2201	1			Black
	9500 0643	1			Honey, For Deluxe Model
2					HEADLINING ***
	9500 0041	1		87	Almond
	9500 0040	1		88	Almond
	J805 2324	1		87	Beige
	J805 2325	1		88	Beige
	J805 2202	1		87	Black
	J805 2203	1		88	Black
	9500 0645	1		87	Honey
	9500 0644	1		88	Honey
3					MOULDING, Header
	J805 2206	1			Beige
	J805 2454	1			Black
4					MOULDING, Headlining
	9500 0036	1			Almond
	J805 2205	1			Beige
	J805 2452	1			Black
	9500 0636	1			Honey
5					MOULDING, Headlining
	9500 0037	1			Almond
	J805 2209	1			Beige
	J805 2453	1			Black
	9500 0637	1			Honey
6					MOULDING, Headlining
	9500 0044	1			Almond
	J805 2435	1			Beige
	J805 2267	1			Black
	9500 0642	1			Honey
7	J092 2008	AR			SCREW
8					MOULDING, Headlining
	9500 0039	2		87	Almond
	9500 0038	2		88	Almond
	J805 2207	2		87	Beige
	J805 2208	2		88	Beige

MODEL CODES
16=Cherokee 2 Dr.(1981-83)
17=Cherokee 2 Dr.(1981-83)
73=Cherokee 2WD-2 Dr.(1984-86)
74=Cherokee 2WD-4 Dr.(1984-86)
18=Cherokee 4 Dr.(1981-83)
77=Cherokee 4WD-2 Dr.(1984-86)
78=Cherokee 4WD-4 Dr.(1984-86)
85=CJ-5 (1981-83)
86=CJ-6(1981)
87=CJ-7(1981-86)
88=CJ-8, Scrambler(1981-86)
64=Comanche 2WD-6 Ft. Box(1986)
66=Comanche 2WD-7 Ft. Box(1986)
63=Comanche 4WD-6 Ft. Box(1986)
65=Comanche 4WD-7 Ft. Box(1986)
15=Grand Wagoneer 4 Dr.(1984-86)
25=J-10 Truck 7 Ft. Box(1981-84)
26=J10 Truck 8 Ft. Box(1981-86)
27=J-20 Truck 8 Ft. Box(1981-86)
15=Wagoneer 4 Dr.(1981-83)
75=Wagoneer 4WD-4 Dr.(1984-86)

BODY
CJ=CJ-5, CJ-6, CJ-7, CJ-8, Scrambler(1981-86)
MJ=Comanche Pickup(1986)

STYLES
SJ=Wagoneer(1981-83), Grand Wagoneer(1984-86), Cherokee(1981-83), J-10, J-20(1981-86)
XJ=Wagoneer(1984-86), Cherokee(1984-86)

AR = Use as Required - = Non Illustrated Part P.A.R. = Paint as Required

HEADLINING AND UPPER TRIM MOULDINGS WORLD CAB, EXPORT CJ-7,8
Figure 46-300

81J 046 300

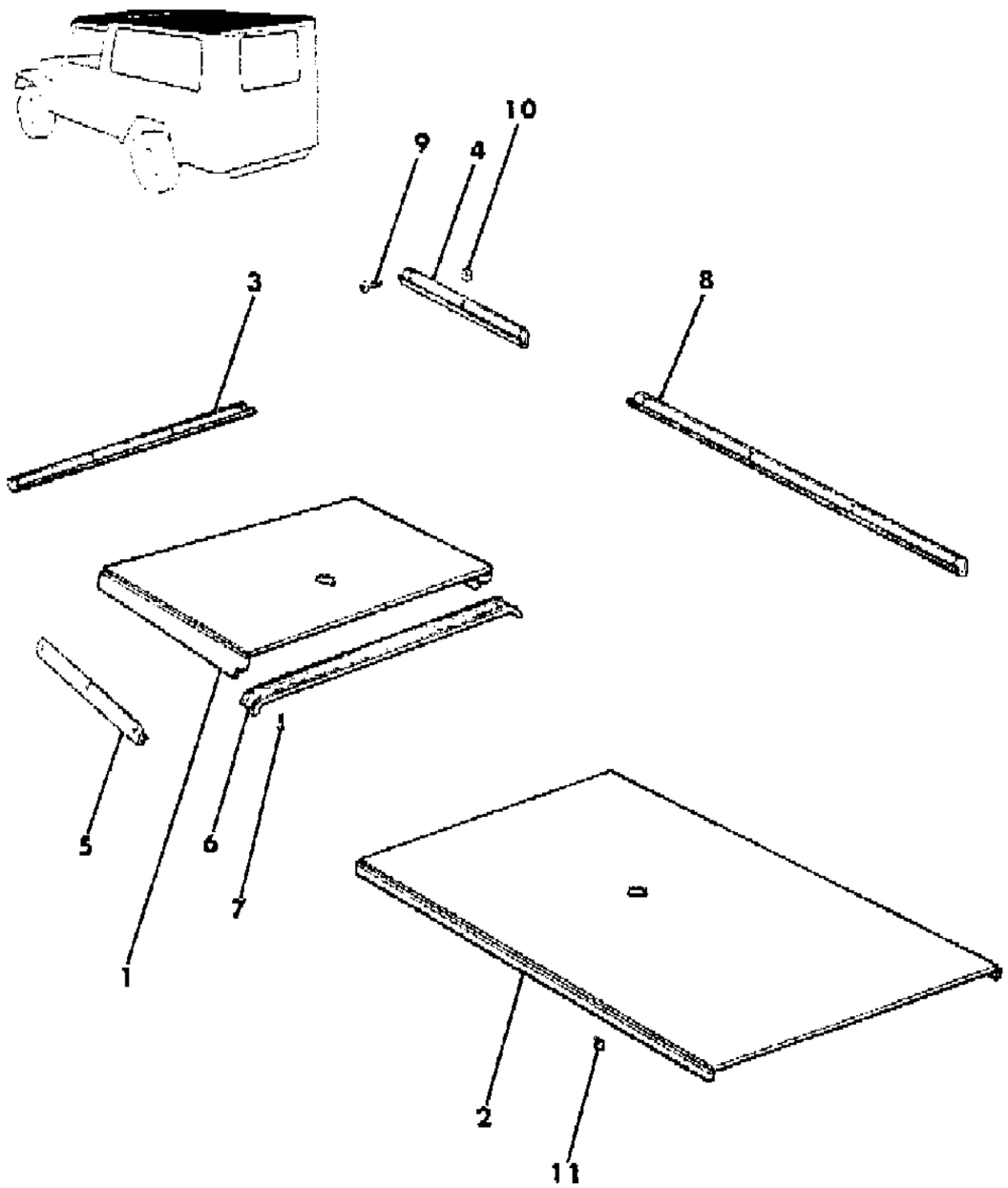

ITEM	PART NUMBER	QTY	BODY	MODEL	DESCRIPTION
	J805 2456	2		87	Black
	J805 2455	2		88	Black
	9500 0639	2		87	Honey
	9500 0638	2		88	Honey
9	J016 1798	AR			SCREW
10	J400 0322	AR			CLIP
11	J400 4919	AR			FASTENER

MODEL CODES

16=Cherokee 2 Dr.(1981-83)
17=Cherokee 2 Dr.(1981-83)
73=Cherokee 2WD-2 Dr.(1984-86)
74=Cherokee 2WD-4 Dr.(1984-86)
18=Cherokee 4 Dr.(1981-83)
77=Cherokee 4WD-2 Dr.(1984-86)
78=Cherokee 4WD-4 Dr.(1984-86)
85=CJ-5 (1981-83)
86=CJ-6(1981)
87=CJ-7(1981-86)
88=CJ-8, Scrambler(1981-86)
64=Comanche 2WD-6 Ft. Box(1986)
66=Comanche 2WD-7 Ft. Box(1986)
63=Comanche 4WD-6 Ft. Box(1986)
65=Comanche 4WD-7 Ft. Box(1986)
15=Grand Wagoneer 4 Dr.(1984-86)
25=J-10 Truck 7 Ft. Box(1981-84)
26=J10 Truck 8 Ft. Box(1981-86)
27=J-20 Truck 8 Ft. Box(1981-86)
15=Wagoneer 4 Dr.(1981-83)
75=Wagoneer 4WD-4 Dr.(1984-86)

BODY
CJ=CJ-5, CJ-6, CJ-7, CJ-8, Scrambler(1981-86)
MJ=Comanche Pickup(1986)

STYLES
SJ=Wagoneer(1981-83), Grand Wagoneer(1984-86), Cherokee(1981-83), J-10, J-20(1981-86)
XJ=Wagoneer(1984-86), Cherokee(1984-86)

AR = Use as Required - = Non Illustrated Part P.A.R. = Paint as Required

« RETURN TO GROUP INDEX

81J 046 400

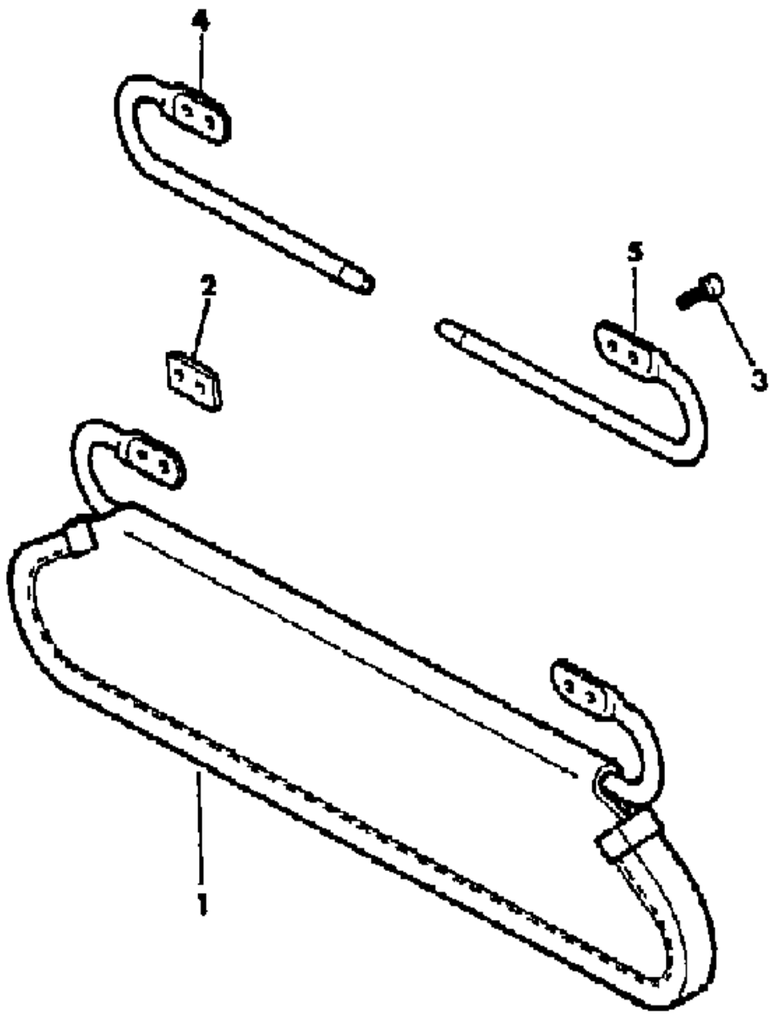

ITEM	PART NUMBER	QTY	BODY	MODEL	DESCRIPTION
1					SUNVISOR ***
					Right
	J575 2696	1			1981: Black, with Flexible Outer End
	J576 1193	1			1981: Black, with Rigid Outer End
	J576 0699	1			1982-86: Black
	J576 0700	1			1982-83: Blue
	J576 4452	1			1984-86: Garnet
	J576 5136	1			1985-86: Honey
	J575 2706	1			1981: Nutmeg, with Flexible Outer End
	J576 0357	1			1981: Nutmeg, with Rigid Outer End
	J576 0701	1			1982-86: Nutmeg
					Right, EXPORT
	J575 8528	1			1981: Black, with Flexible Outer End
	J576 0370	1			1981: Black, with Rigid Outer End
	J576 0705	1			1982-86: Black
	J576 4453	1			1984-85: Garnet
	J576 5138	1			1985: Honey
	J575 8644	1			1981: Nutmeg, with Flexible Outer End
	J576 0371	1			1981: Nutmeg, with Rigid Outer End
	J576 0707	1			1982-86: Nutmeg
					Left
	J575 2697	1			1981: Black, with Flexible Outer End
	J576 1193	1			1981: Black, with Rigid Outer End
	J576 0699	1			1982-86: Black
	J576 0700	1			1982-83: Blue
	J576 4452	1			1984-86: Garnet
	J576 5136	1			1985-86: Honey
	J575 2707	1			1981: Nutmeg, with Flexible Outer End
	J576 0357	1			1981: Nutmeg, with Rigid Outer End
	J576 0701	1			1982-86: Nutmeg
					Left, EXPORT
	J575 8643	1			1981: Black, with Flexible Outer End
	J576 0370	1			1981: Black, with Rigid Outer End
	J576 0705	1			1982-86: Black
	J576 4453	1			1981-85: Garnet
	J576 5138	1			1985: Honey
	J575 8645	1			1981: Nutmeg, with Flexible Outer End
	J576 0371	1			1981: Nutmeg, with Rigid Outer End
	J576 0707	1			1982-86: Nutmeg

MODEL CODES

16=Cherokee 2 Dr.(1981-83)
17=Cherokee 2 Dr.(1981-83)
73=Cherokee 2WD-2 Dr.(1984-86)
74=Cherokee 2WD-4 Dr.(1984-86)
18=Cherokee 4 Dr.(1981-83)
77=Cherokee 4WD-2 Dr.(1984-86)
78=Cherokee 4WD-4 Dr.(1984-86)
85=CJ-5 (1981-83)
86=CJ-6(1981)
87=CJ-7(1981-86)
88=CJ-8, Scrambler(1981-86)
64=Comanche 2WD-6 Ft. Box(1986)
66=Comanche 2WD-7 Ft. Box(1986)
63=Comanche 4WD-6 Ft. Box(1986)
65=Comanche 4WD-7 Ft. Box(1986)
15=Grand Wagoneer 4 Dr.(1984-86)
25=J-10 Truck 7 Ft. Box(1981-84)
26=J10 Truck 8 Ft. Box(1981-86)
27=J-20 Truck 8 Ft. Box(1981-86)
15=Wagoneer 4 Dr.(1981-83)
75=Wagoneer 4WD-4 Dr.(1984-86)

BODY
CJ=CJ-5, CJ-6, CJ-7, CJ-8, Scrambler(1981-86)
MJ=Comanche Pickup(1986)

STYLES
SJ=Wagoneer(1981-83), Grand Wagoneer(1984-86), Cherokee(1981-83), J-10, J-20(1981-86)
XJ=Wagoneer(1984-86), Cherokee(1984-86)

AR = Use as Required - = Non Illustrated Part P.A.R. = Paint as Required

81J 046 400

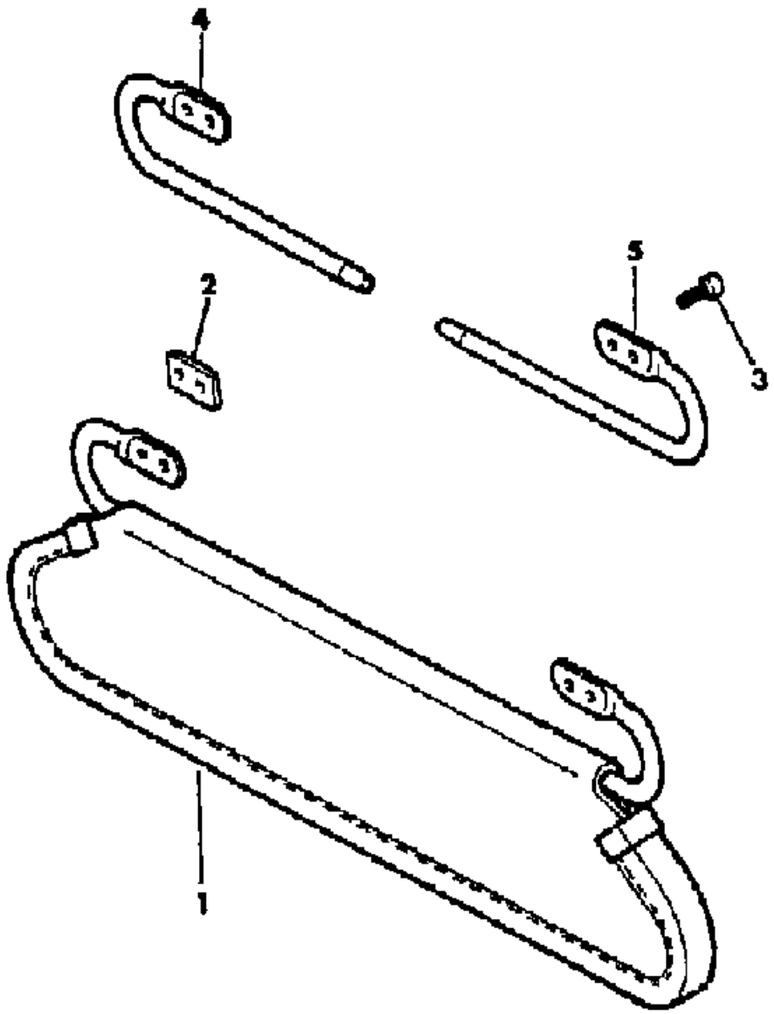

ITEM	PART NUMBER	QTY	BODY	MODEL	DESCRIPTION
2					SPACER
	J805 2414	4			With World Cab
3	J400 5969	8			SCREW
4					ROD, Support
	J575 8980	1			1981: 7" Long
	J097 8988	1			1981: 8" Long
	J576 1344	1			1982-86
5					ROD, Support
	J575 8981	1			1981: 7" Long
	J097 8987	1			1981: 8" Long
	J576 1345	1			1982-86

MODEL CODES
16=Cherokee 2 Dr.(1981-83)
17=Cherokee 2 Dr.(1981-83)
73=Cherokee 2WD-2 Dr.(1984-86)
74=Cherokee 2WD-4 Dr.(1984-86)
18=Cherokee 4 Dr.(1981-83)
77=Cherokee 4WD-2 Dr.(1984-86)
78=Cherokee 4WD-4 Dr.(1984-86)
85=CJ-5 (1981-83)
86=CJ-6(1981)
87=CJ-7(1981-86)
88=CJ-8, Scrambler(1981-86)
64=Comanche 2WD-6 Ft. Box(1986)
66=Comanche 2WD-7 Ft. Box(1986)
63=Comanche 4WD-6 Ft. Box(1986)
65=Comanche 4WD-7 Ft. Box(1986)
15=Grand Wagoneer 4 Dr.(1984-86)
25=J-10 Truck 7 Ft. Box(1981-84)
26=J10 Truck 8 Ft. Box(1981-86)
27=J-20 Truck 8 Ft. Box(1981-86)
15=Wagoneer 4 Dr.(1981-83)
75=Wagoneer 4WD-4 Dr.(1984-86)

BODY
CJ=CJ-5, CJ-6, CJ-7, CJ-8, Scrambler(1981-86)
MJ=Comanche Pickup(1986)

STYLES
SJ=Wagoneer(1981-83), Grand Wagoneer(1984-86), Cherokee(1981-83), J-10, J-20(1981-86)
XJ=Wagoneer(1984-86), Cherokee(1984-86)

AR = Use as Required - = Non Illustrated Part P.A.R. = Paint as Required

CARPETS AND INTERIOR TRIM PANELS WITHOUT EXPORT CJ-5,6,7,8, SCRAMBLER
Figure 46-500

81J 046 500

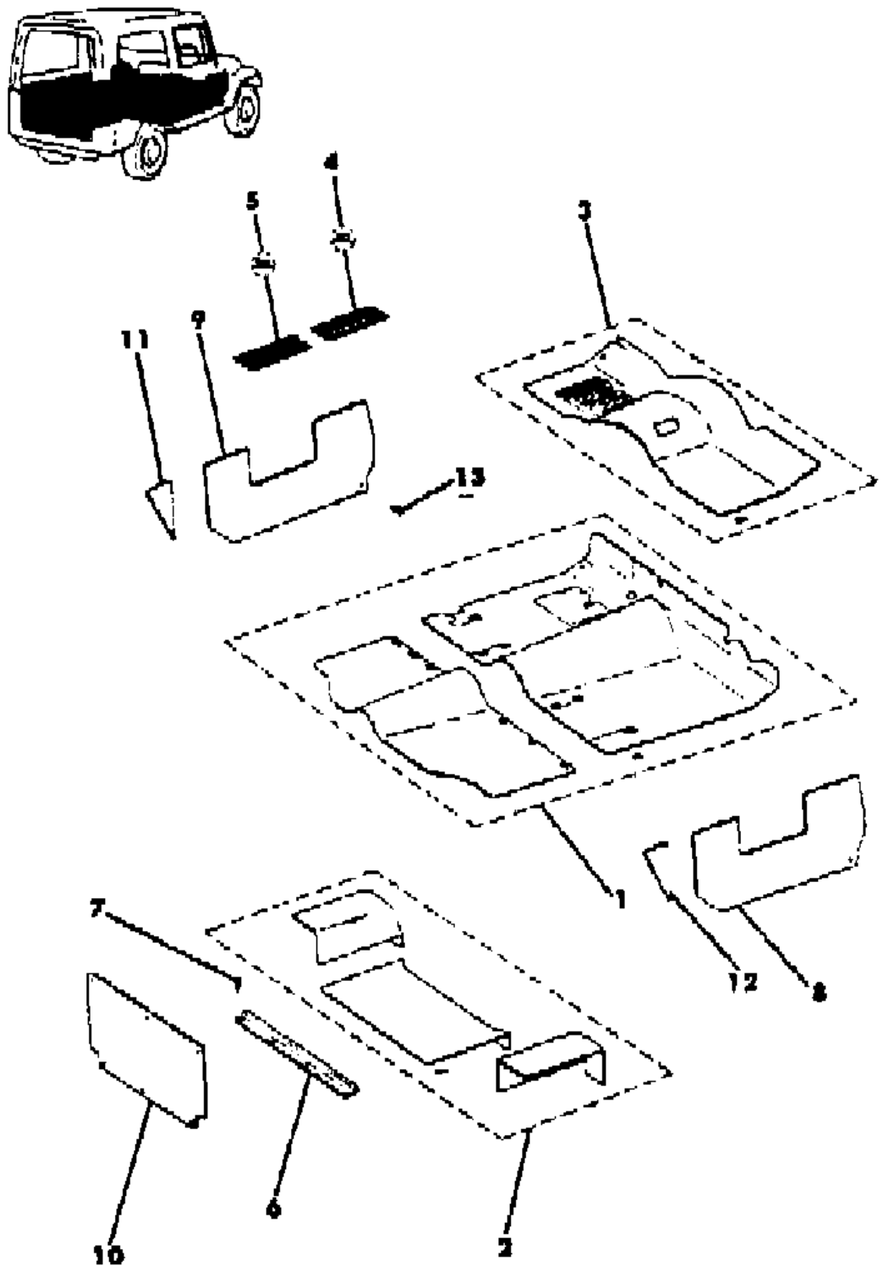

ITEM	PART NUMBER	QTY	BODY	MODEL	DESCRIPTION
1					CARPET, Floor
	J813 0733	1		85	Black
	J813 0731	1		87	Black, Used with Lap Type Seat Belts
	J813 4362	1		87	Black, Used with Shoulder Type Seat Belts, without Extra Quiet Insulation
	8350 0981	1		87	Black, Used with Shoulder Type Seat Belts, with Extra Quiet Insulation
	J813 3704	1		88	Black, Used with Lap Type Seat Belts
	J813 4346	1		88	Black, Used with Shoulder Type Seat Belts
	J813 3967	1		87	Blue, Limited, Used with Lap Type Seat Belts
	J813 4364	1		87	Blue, Limited, Used with Shoulder Type Seatbelts
	8350 0664	1		87	Garnet, without Extra Quiet Insulation
	8350 0982	1		87	Garnet, with Extra Quiet Insulation
	8350 0665	1		88	Garnet
	8350 1576	1		87	Honey, without Extra Quiet Insulation
	8350 1580	1		87	Honey, with Extra Quiet Insulation
	8350 1577	1		88	Honey
	J813 3284	1		85	Nutmeg
	J813 3283	1		87	Nutmeg, Used with Lap Type Seatbelts
	J813 4363	1		87	Nutmeg, without Limited, without Extra Quiet Insulation
	J813 4365	1		87	Nutmeg, Limited, with Extra Quiet Insulation
	J813 3705	1		88	Nutmeg, Used with Lap Type Seatbelts
	J813 4347	1		85	Nutmeg, Used with Shoulder Type Seat Belts
2					CARPET, Rear
	J813 0742	1		85	Black
	J813 0740	1		87	Black, without Extra Quiet Insulation
	8350 0983	1		87	Black, with Extra Quiet Insulation
	J813 3975	1		87	Blue, Limited
	8350 0668	1		87	Garnet, without Extra Quiet Insulation
	8350 0984	1		87	Garnet, with Extra Quiet Insulation
	8350 1581	1		87	Honey, without Extra Quiet Insulation
	8350 1583	1		87	Honey, with Extra Quiet Insulation
	J813 3304	1		85	Nutmeg
	J813 3303	1		87	Nutmeg, without Extra Quiet Insulation
	J813 3974	1		87	Nutmeg, with Extra Quiet Insulation
3					CARPET, Floor Mini
	J575 6627	1			Black
4	J368 9091	AR			FASTENER, Velcro Hook
5	J368 9095	AR			FASTENER, Velcro

MODEL CODES

16=Cherokee 2 Dr.(1981-83)	78=Cherokee 4WD-4 Dr.(1984-86)	64=Comanche 2WD-6 Ft. Box(1986)	25=J-10 Truck 7 Ft. Box(1981-84)
17=Cherokee 2 Dr.(1981-83)	85=CJ-5 (1981-83)	66=Comanche 2WD-7 Ft. Box(1986)	26=J10 Truck 8 Ft. Box(1981-86)
73=Cherokee 2WD-2 Dr.(1984-86)	86=CJ-6(1981)	63=Comanche 4WD-6 Ft. Box(1986)	27=J-20 Truck 8 Ft. Box(1981-86)
74=Cherokee 2WD-4 Dr.(1984-86)	87=CJ-7(1981-86)	65=Comanche 4WD-7 Ft. Box(1986)	15=Wagoneer 4 Dr.(1981-83)
18=Cherokee 4 Dr.(1981-83)	88=CJ-8, Scrambler(1981-86)	15=Grand Wagoneer 4 Dr.(1984-86)	75=Wagoneer 4WD-4 Dr.(1984-86)
77=Cherokee 4WD-2 Dr.(1984-86)			

BODY
CJ=CJ-5, CJ-6, CJ-7, CJ-8, Scrambler(1981-86)
MJ=Comanche Pickup(1986)

STYLES
SJ=Wagoneer(1981-83), Grand Wagoneer(1984-86), Cherokee(1981-83), J-10, J-20(1981-86)
XJ=Wagoneer(1984-86), Cherokee(1984-86)

AR = Use as Required - = Non Illustrated Part P.A.R. = Paint as Required

CARPETS AND INTERIOR TRIM PANELS WITHOUT EXPORT CJ-5,6,7,8, SCRAMBLER
Figure 46-500

81J 046 500

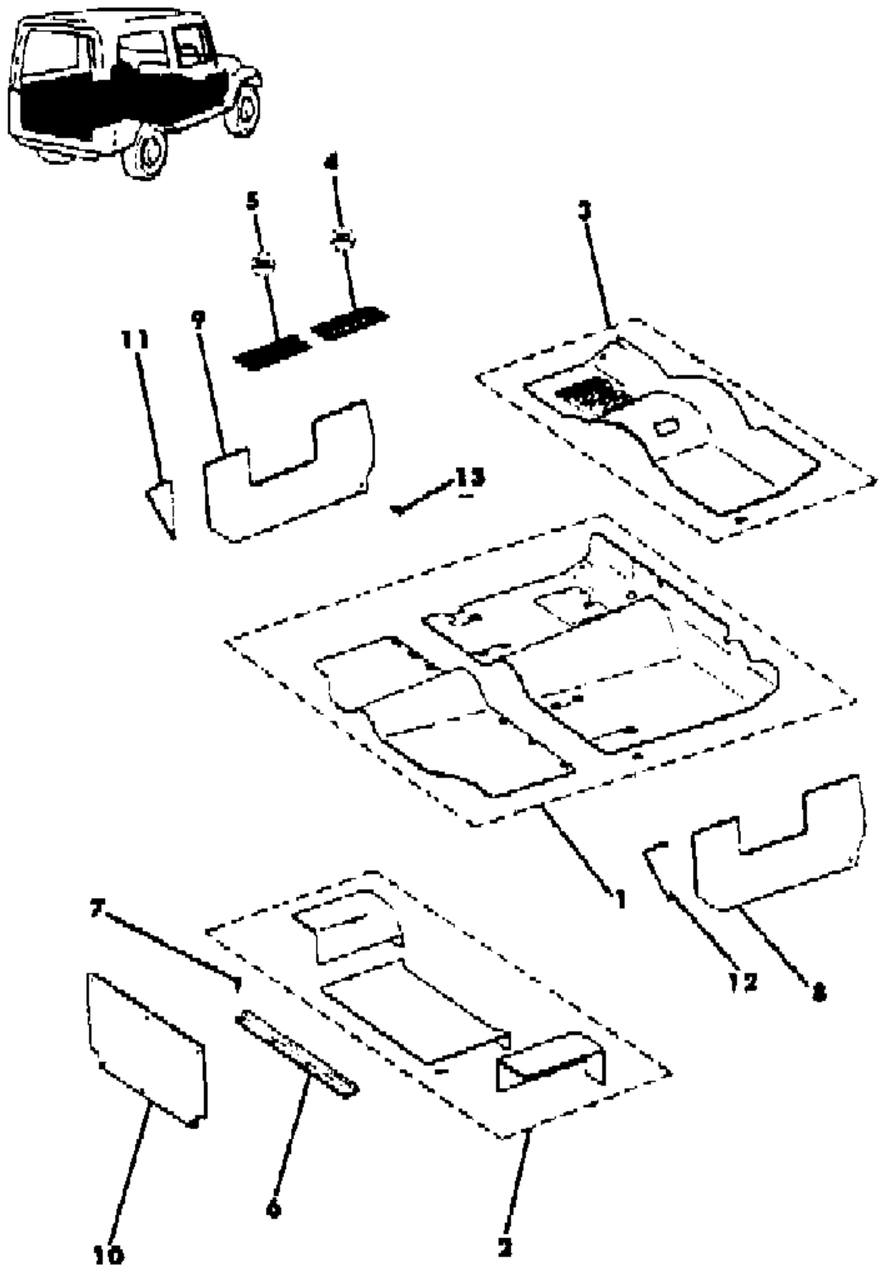

ITEM	PART NUMBER	QTY	BODY	MODEL	DESCRIPTION
6	J576 0665	1			RETAINER
7	J400 5690	11			SCREW
8					CARPET, Side Trim
	J576 5128	1			Black
	J576 0774	1			Blue, Used with Lap Type Seatbelts
	J576 0774	1			Blue, Limited, Used with Lap Type Seat Belts
	J576 2162	1			Blue, Used with Shoulder Type Seatbelts
	J576 2162	1			Blue, Limited, Used with Shoulder Type Seatbelts
	J576 5130	1			Garnet
	J576 6082	1			Honey
	J576 0776	1			Nutmeg, Used with Lap Type Seatbelts
	J576 0776	1			Nutmeg, Limited, Used with Lap Type Seatbelts
	J576 2164	1			Nutmeg, Used with Shoulder Type Seatbelts
	J576 2164	1			Nutmeg, Limited, Used with Shoulder Type Seatbelts
9					CARPET, Side Trim
	J576 5129	1			Black
	J576 0775	1			Blue, Used with Lap Type Seatbelts
	J576 0775	1			Blue, Limited, Used with Lap Type Seatbelts
	J576 2163	1			Blue, Used with Shoulder Type Seatbelts
	J576 2163	1			Blue, Limited, Used with Shoulder Type Seatbelts
	J576 5131	1			Garnet
	J576 6083	1			Honey
	J576 0777	1			Nutmeg, Used with Lap Type Seatbelts
	J576 0777	1			Nutmeg, Limited, Used with Lap Type Seatbelts
	J576 2165	1			Nutmeg, Used with Shoulder Type Seatbelts
	J576 2165	1			Nutmeg, Limited, Used with Shoulder Type Seatbelts
10					CARPET, Tailgate
	J576 5120	1			Black
	J576 0643	1			Blue
	J576 5121	1			Garnet
	J576 6283	1			Honey
	J576 6283	1			Honey, Limited
	J576 0642	1			Nutmeg
	J576 0642	1			Nutmeg, Limited
11					CARPET, Side Trim
	J575 4695	1			Black
	J575 5723	1			Nutmeg
12					CARPET, Side Trim
	J575 4696	1			Black

MODEL CODES

16=Cherokee 2 Dr.(1981-83)	78=Cherokee 4WD-4 Dr.(1984-86)	64=Comanche 2WD-6 Ft. Box(1986)	25=J-10 Truck 7 Ft. Box(1981-84)
17=Cherokee 2 Dr.(1981-83)	85=CJ-5 (1981-83)	66=Comanche 2WD-7 Ft. Box(1986)	26=J10 Truck 8 Ft. Box(1981-86)
73=Cherokee 2WD-2 Dr.(1984-86)	86=CJ-6(1981)	63=Comanche 4WD-6 Ft. Box(1986)	27=J-20 Truck 8 Ft. Box(1981-86)
74=Cherokee 2WD-4 Dr.(1984-86)	87=CJ-7(1981-86)	65=Comanche 4WD-7 Ft. Box(1986)	15=Wagoneer 4 Dr.(1981-83)
18=Cherokee 4 Dr.(1981-83)	88=CJ-8, Scrambler(1981-86)	15=Grand Wagoneer 4 Dr.(1984-86)	75=Wagoneer 4WD-4 Dr.(1984-86)
77=Cherokee 4WD-2 Dr.(1984-86)			

BODY
CJ=CJ-5, CJ-6, CJ-7, CJ-8, Scrambler(1981-86)
MJ=Comanche Pickup(1986)

STYLES
SJ=Wagoneer(1981-83), Grand Wagoneer(1984-86), Cherokee(1981-83), J-10, J-20(1981-86)
XJ=Wagoneer(1984-86), Cherokee(1984-86)

AR = Use as Required - = Non Illustrated Part P.A.R. = Paint as Required

CARPETS AND INTERIOR TRIM PANELS WITHOUT EXPORT CJ-5,6,7,8, SCRAMBLER
Figure 46-500

81J 046 500

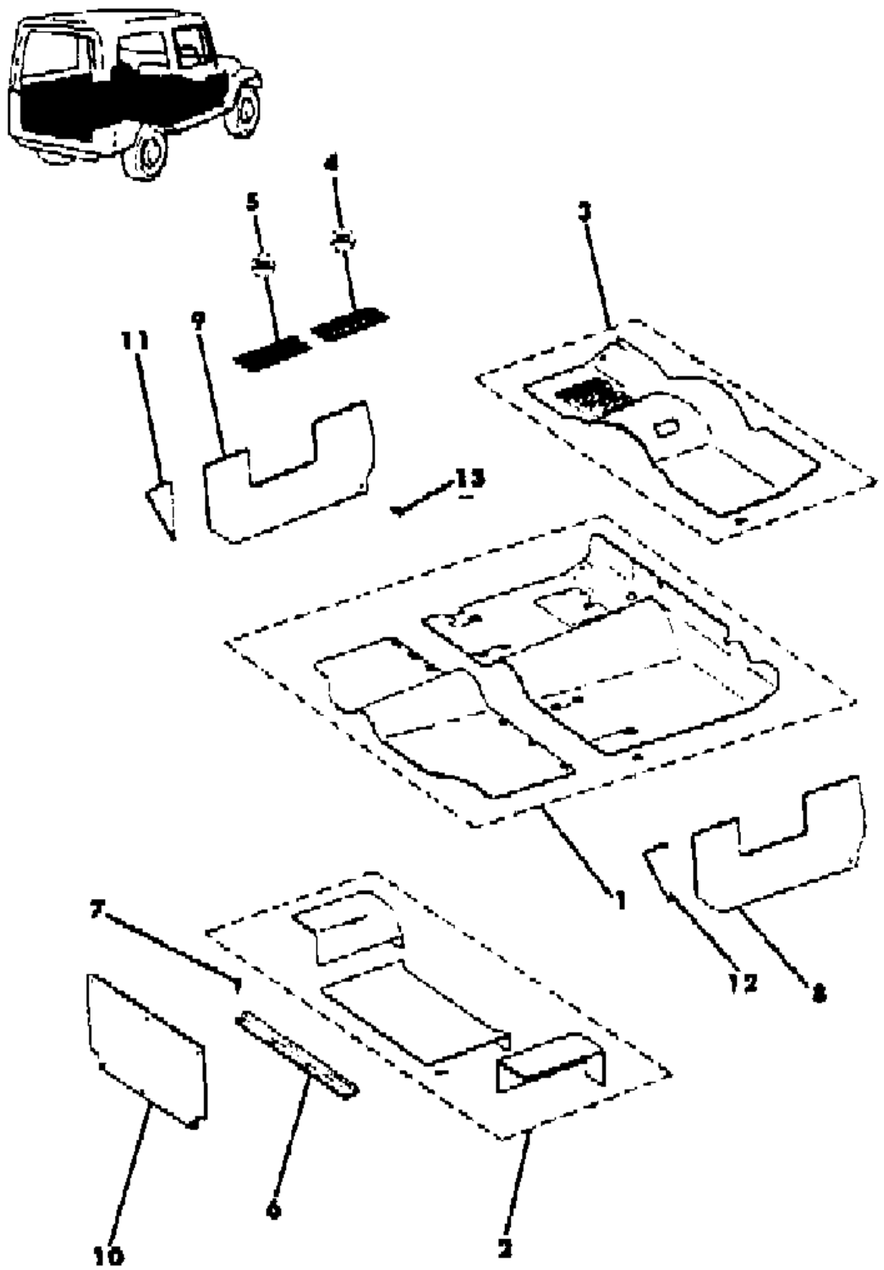

ITEM	PART NUMBER	QTY	BODY	MODEL	DESCRIPTION
	J575 5722	1			Nutmeg
13	J400 5690	6			SCREW

MODEL CODES

16=Cherokee 2 Dr.(1981-83)	78=Cherokee 4WD-4 Dr.(1984-86)	64=Comanche 2WD-6 Ft. Box(1986)	25=J-10 Truck 7 Ft. Box(1981-84)
17=Cherokee 2 Dr.(1981-83)	85=CJ-5 (1981-83)	66=Comanche 2WD-7 Ft. Box(1986)	26=J10 Truck 8 Ft. Box(1981-86)
73=Cherokee 2WD-2 Dr.(1984-86)	86=CJ-6(1981)	63=Comanche 4WD-6 Ft. Box(1986)	27=J-20 Truck 8 Ft. Box(1981-86)
74=Cherokee 2WD-4 Dr.(1984-86)	87=CJ-7(1981-86)	65=Comanche 4WD-7 Ft. Box(1986)	15=Wagoneer 4 Dr.(1981-83)
18=Cherokee 4 Dr.(1981-83)	88=CJ-8, Scrambler(1981-86)	15=Grand Wagoneer 4 Dr.(1984-86)	75=Wagoneer 4WD-4 Dr.(1984-86)
77=Cherokee 4WD-2 Dr.(1984-86)			

BODY
CJ=CJ-5, CJ-6, CJ-7, CJ-8, Scrambler(1981-86)
MJ=Comanche Pickup(1986)

STYLES
SJ=Wagoneer(1981-83), Grand Wagoneer(1984-86), Cherokee(1981-83), J-10, J-20(1981-86)
XJ=Wagoneer(1984-86), Cherokee(1984-86)

AR = Use as Required - = Non Illustrated Part P.A.R. = Paint as Required

« RETURN TO GROUP INDEX

CARPETS AND INTERIOR TRIM PANELS EXPORT, WITH WORLD CAB CJ-7,8
Figure 46-600

B1J 046 600

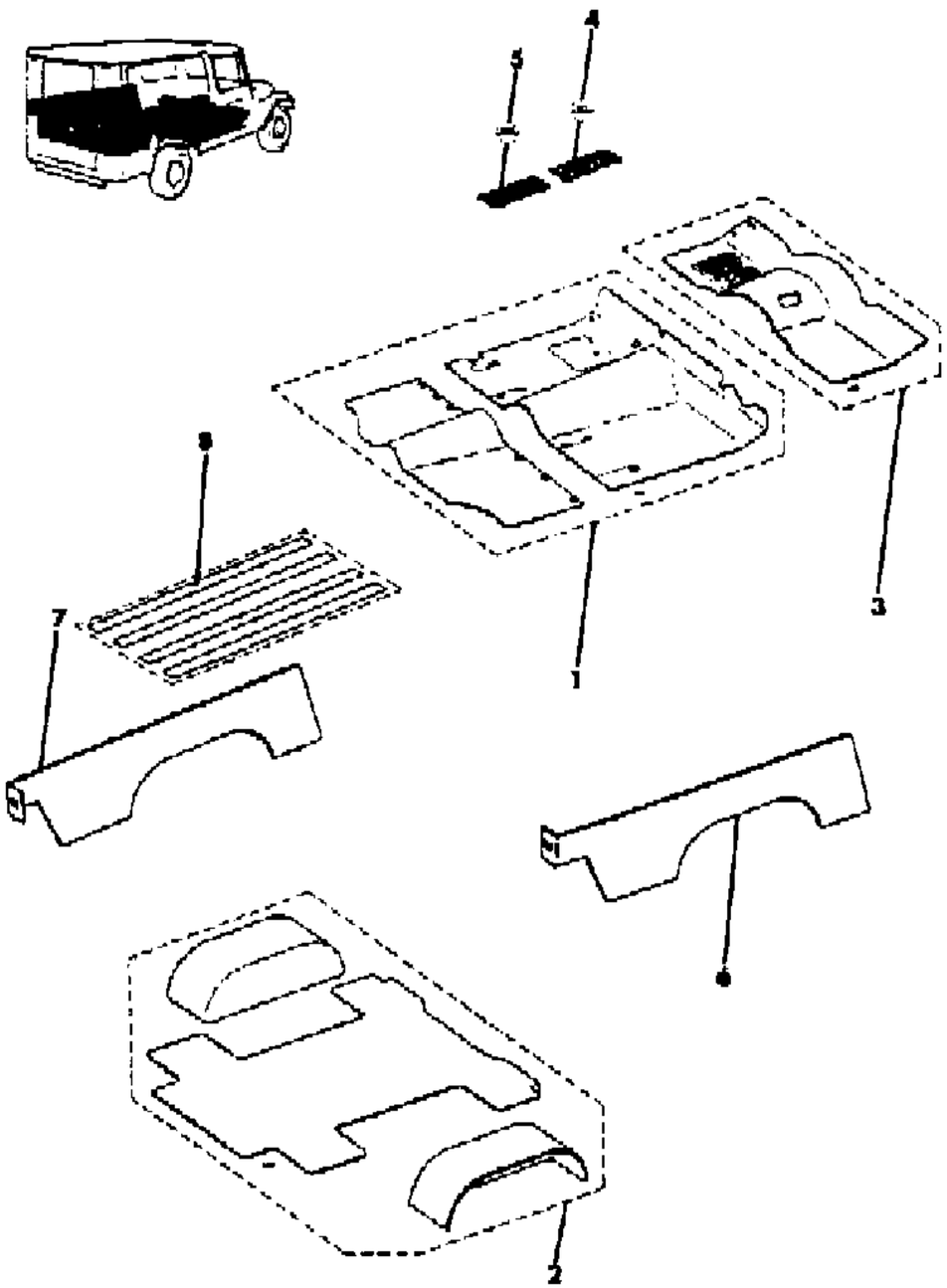

ITEM	PART NUMBER	QTY	BODY	MODEL	DESCRIPTION
1					CARPET, Floor
					Right Hand Drive
	J813 4366	1		87	Black
	J813 4348	1		88	Black
	8350 0666	1		87	Garnet
	8350 0667	1		88	Garnet
	8350 1578	1		87	Honey
	8350 1579	1		88	Honey
	J813 4366	1		87	Nutmeg
	J813 4349	1		88	Nutmeg
					Left Hand Drive
	J813 4362	1		87	Black
	J813 4346	1		88	Black
	8350 0664	1		87	Garnet
	8350 0665	1		88	Garnet
	8350 1576	1		87	Honey
	8350 1577	1		88	Honey
	J813 4363	1		87	Nutmeg
	J813 4347	1		88	Nutmeg
2					CARPET, Rear
	8351 0182	1		87	Black
	J813 3902	1		88	Black
	8350 2304	1		87	Garnet
	8350 1357	1		88	Garnet
	8350 1584	1		87	Honey
	8351 0183	1		87	Nutmeg
	J813 4781	1		88	Nutmeg
3					CARPET, Floor Mini
					Right Hand Drive
	J575 6633	1			Black
					Left Hand Drive
	J575 6627	1			Black
4	J368 9091	AR			FASTENER, Velcro Hook
5	J368 9095	AR			FASTENER, Velcro Loop
6					PANEL, Side Trim
	J805 3118	1			Black
	9500 0390	1			Garnet
	9500 0634	1			Honey
	J805 3120	1			Nutmeg

MODEL CODES
16=Cherokee 2 Dr.(1981-83)
17=Cherokee 2 Dr.(1981-83)
73=Cherokee 2WD-2 Dr.(1984-86)
74=Cherokee 2WD-4 Dr.(1984-86)
18=Cherokee 4 Dr.(1981-83)
77=Cherokee 4WD-2 Dr.(1984-86)
78=Cherokee 4WD-4 Dr.(1984-86)
85=CJ-5 (1981-83)
86=CJ-6(1981)
87=CJ-7(1981-86)
88=CJ-8, Scrambler(1981-86)
64=Comanche 2WD-6 Ft. Box(1986)
66=Comanche 2WD-7 Ft. Box(1986)
63=Comanche 4WD-6 Ft. Box(1986)
65=Comanche 4WD-7 Ft. Box(1986)
15=Grand Wagoneer 4 Dr.(1984-86)
25=J-10 Truck 7 Ft. Box(1981-84)
26=J10 Truck 8 Ft. Box(1981-86)
27=J-20 Truck 8 Ft. Box(1981-86)
15=Wagoneer 4 Dr.(1981-83)
75=Wagoneer 4WD-4 Dr.(1984-86)

BODY
CJ=CJ-5, CJ-6, CJ-7, CJ-8, Scrambler(1981-86)
MJ=Comanche Pickup(1986)

STYLES
SJ=Wagoneer(1981-83), Grand Wagoneer(1984-86), Cherokee(1981-83), J-10, J-20(1981-86)
XJ=Wagoneer(1984-86), Cherokee(1984-86)

AR = Use as Required - = Non Illustrated Part P.A.R. = Paint as Required

CARPETS AND INTERIOR TRIM PANELS EXPORT, WITH WORLD CAB CJ-7,8
Figure 46-600

B1J 046 600

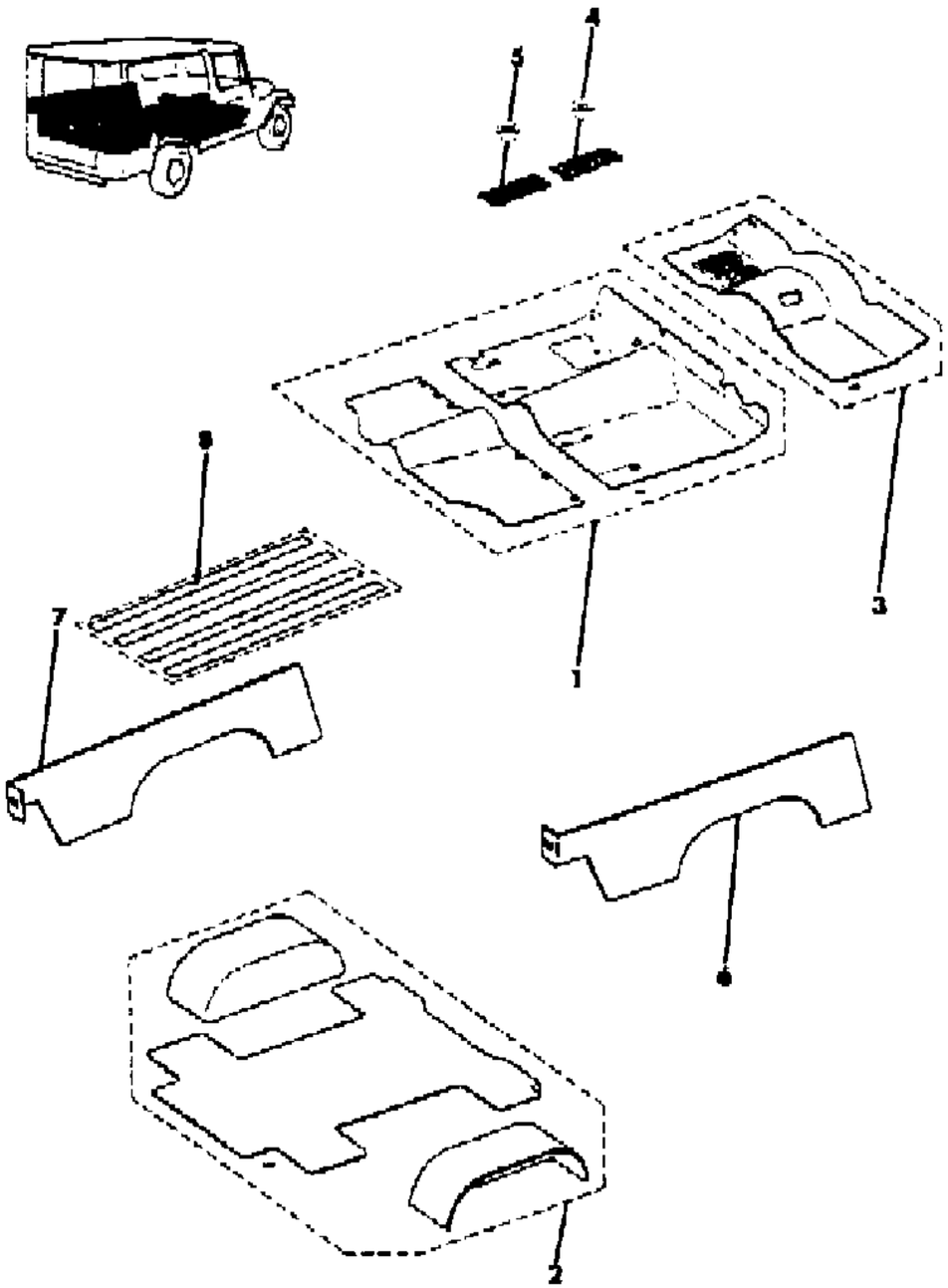

ITEM	PART NUMBER	QTY	BODY	MODEL	DESCRIPTION
7					PANEL, Side Trim
	J805 3117	1			Black
	9500 0391	1			Garnet
	9500 0633	1			Honey
	J805 3119	1			Nutmeg
8					STRIP, Skid ***
	J805 2572	1		87	
	J805 2571	1		88	

MODEL CODES

16=Cherokee 2 Dr.(1981-83)
17=Cherokee 2 Dr.(1981-83)
73=Cherokee 2WD-2 Dr.(1984-86)
74=Cherokee 2WD-4 Dr.(1984-86)
18=Cherokee 4 Dr.(1981-83)
77=Cherokee 4WD-2 Dr.(1984-86)
78=Cherokee 4WD-4 Dr.(1984-86)
85=CJ-5 (1981-83)
86=CJ-6(1981)
87=CJ-7(1981-86)
88=CJ-8, Scrambler(1981-86)
64=Comanche 2WD-6 Ft. Box(1986)
66=Comanche 2WD-7 Ft. Box(1986)
63=Comanche 4WD-6 Ft. Box(1986)
65=Comanche 4WD-7 Ft. Box(1986)
15=Grand Wagoneer 4 Dr.(1984-86)
25=J-10 Truck 7 Ft. Box(1981-84)
26=J10 Truck 8 Ft. Box(1981-86)
27=J-20 Truck 8 Ft. Box(1981-86)
15=Wagoneer 4 Dr.(1981-83)
75=Wagoneer 4WD-4 Dr.(1984-86)

BODY
CJ=CJ-5, CJ-6, CJ-7, CJ-8, Scrambler(1981-86)
MJ=Comanche Pickup(1986)

STYLES
SJ=Wagoneer(1981-83), Grand Wagoneer(1984-86), Cherokee(1981-83), J-10, J-20(1981-86)
XJ=Wagoneer(1984-86), Cherokee(1984-86)

AR = Use as Required - = Non Illustrated Part P.A.R. = Paint as Required

« RETURN TO GROUP INDEX

CARPETS EXPORT, WITHOUT WORLD CAB CJ-5,7,8
Figure 46-700

B1J 046 700

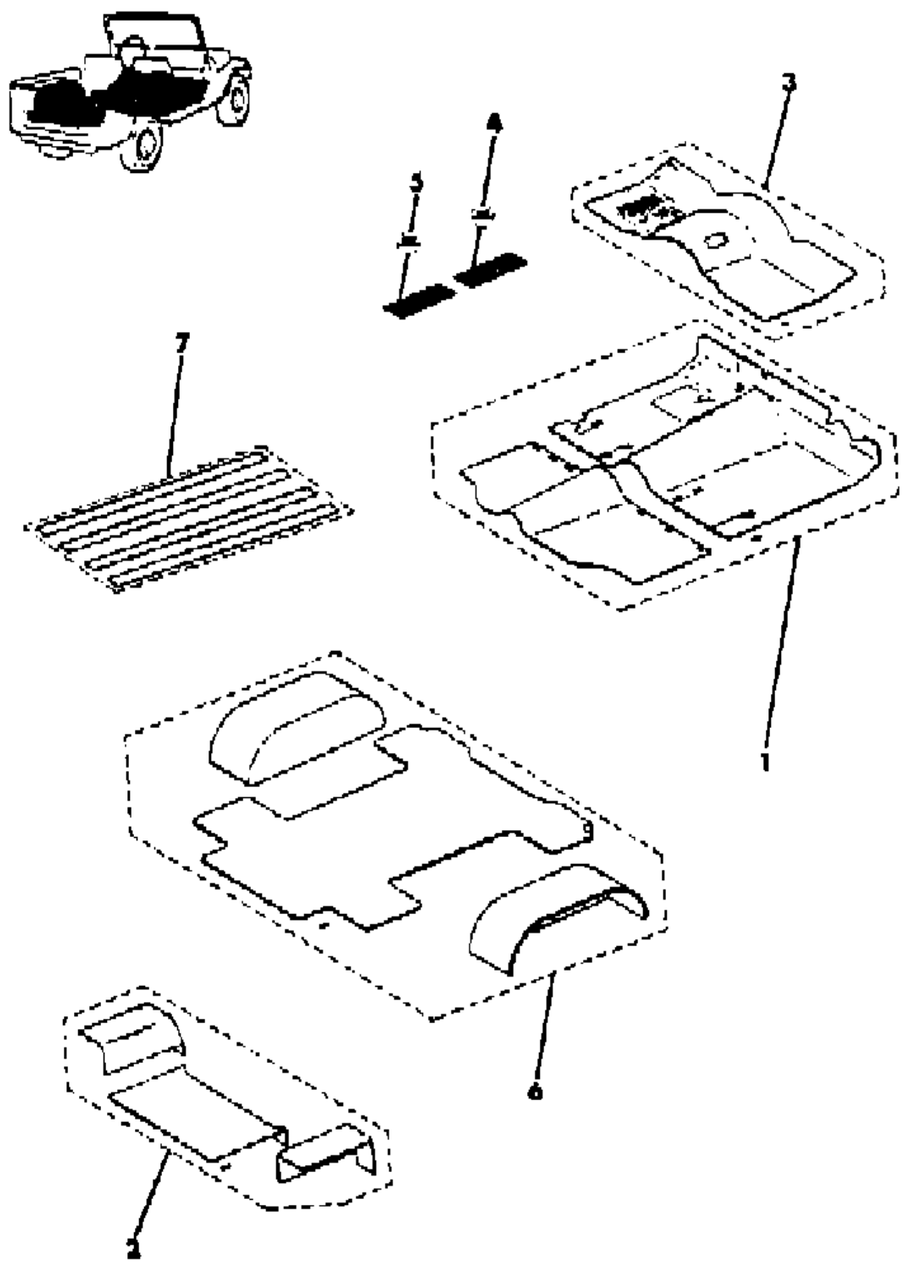

ITEM	PART NUMBER	QTY	BODY	MODEL	DESCRIPTION
1					CARPET, Floor
					Right Hand Drive
	J813 3761	1		85	Black
	J813 3762	1		87	Black, Used with Lap Type Seatbelts
	J813 4366	1		87	Black, Used with Shoulder Type Seatbelts
	J813 3763	1		88	Black, Used with Lap Type Seatbelts
	J813 4348	1		88	Black, Used with Shoulder Type Seatbelts
	8350 0666	1		87	Garnet
	8350 0667	1		88	Garnet
	8350 1578	1		87	Honey
	8350 1579	1		88	Honey
	J813 3761	1		85	Nutmeg
	J813 3762	1		87	Nutmeg, Used with Lap Type Seatbelts
	J813 4366	1		87	Nutmeg, Used with Shoulder Type Seatbelts
	J813 3766	1		88	Nutmeg, Used with Lap Type Seatbelts
	J813 4349	1		88	Nutmeg, Used with Shoulder Type Seatbelts
					Left Hand Drive
	J813 0733	1		85	Black
	J813 0731	1		87	Black, Used with Lap Type Seatbelts
	J813 4362	1		87	Black, Used with Shoulder Type Seatbelts, without Extra Quiet Insulation
	8350 0981	1		87	Black, with Extra Quiet Insulation
	J813 3704	1		88	Black, Used with Lap Type Seatbelts
	J813 4346	1		88	Black, without Full Soft Top, with Shoulder Type Seatbelts
	J813 0731	1		88	Black, with Full Soft Top, Used with Shoulder Type Seatbelts
	8350 0664	1		87	Garnet, without Extra Quiet Insulation
	8350 0982	1		87	Garnet, with Extra Quiet Insulation
	8350 0665	1		88	Garnet
	8350 1576	1		87	Honey, without Extra Quiet Insulation
	8350 1580	1		87	Honey, with Extra Quiet Insulation
	8350 1577	1		88	Honey
	J813 3284	1		85	Nutmeg
	J813 3283	1		87	Nutmeg, without Limited, Used with Lap Type Seatbelts
	J813 3966	1		87	Nutmeg, Limited, with Lap Type Seatbelts
	J813 4363	1		87	Nutmeg, Used with Shoulder Type Seatbelts, without Extra Quiet Insulation
	J813 4365	1		87	Nutmeg, Used with Shoulder Type Seatbelts, with Extra Quiet Insulation
	J813 3705	1		88	Nutmeg, Used with Lap Type Seatbelts

MODEL CODES
16=Cherokee 2 Dr.(1981-83)
17=Cherokee 2 Dr.(1981-83)
73=Cherokee 2WD-2 Dr.(1984-86)
74=Cherokee 2WD-4 Dr.(1984-86)
18=Cherokee 4 Dr.(1981-83)
77=Cherokee 4WD-2 Dr.(1984-86)
78=Cherokee 4WD-4 Dr.(1984-86)
85=CJ-5 (1981-83)
86=CJ-6(1981)
87=CJ-7(1981-86)
88=CJ-8, Scrambler(1981-86)
64=Comanche 2WD-6 Ft. Box(1986)
66=Comanche 2WD-7 Ft. Box(1986)
63=Comanche 4WD-6 Ft. Box(1986)
65=Comanche 4WD-7 Ft. Box(1986)
15=Grand Wagoneer 4 Dr.(1984-86)
25=J-10 Truck 7 Ft. Box(1981-84)
26=J10 Truck 8 Ft. Box(1981-86)
27=J-20 Truck 8 Ft. Box(1981-86)
15=Wagoneer 4 Dr.(1981-83)
75=Wagoneer 4WD-4 Dr.(1984-86)

BODY
CJ=CJ-5, CJ-6, CJ-7, CJ-8, Scrambler(1981-86)
MJ=Comanche Pickup(1986)

STYLES
SJ=Wagoneer(1981-83), Grand Wagoneer(1984-86), Cherokee(1981-83), J-10, J-20(1981-86)
XJ=Wagoneer(1984-86), Cherokee(1984-86)

AR = Use as Required - = Non Illustrated Part P.A.R. = Paint as Required

CARPETS EXPORT, WITHOUT WORLD CAB CJ-5,7,8
Figure 46-700

B1J 046 700

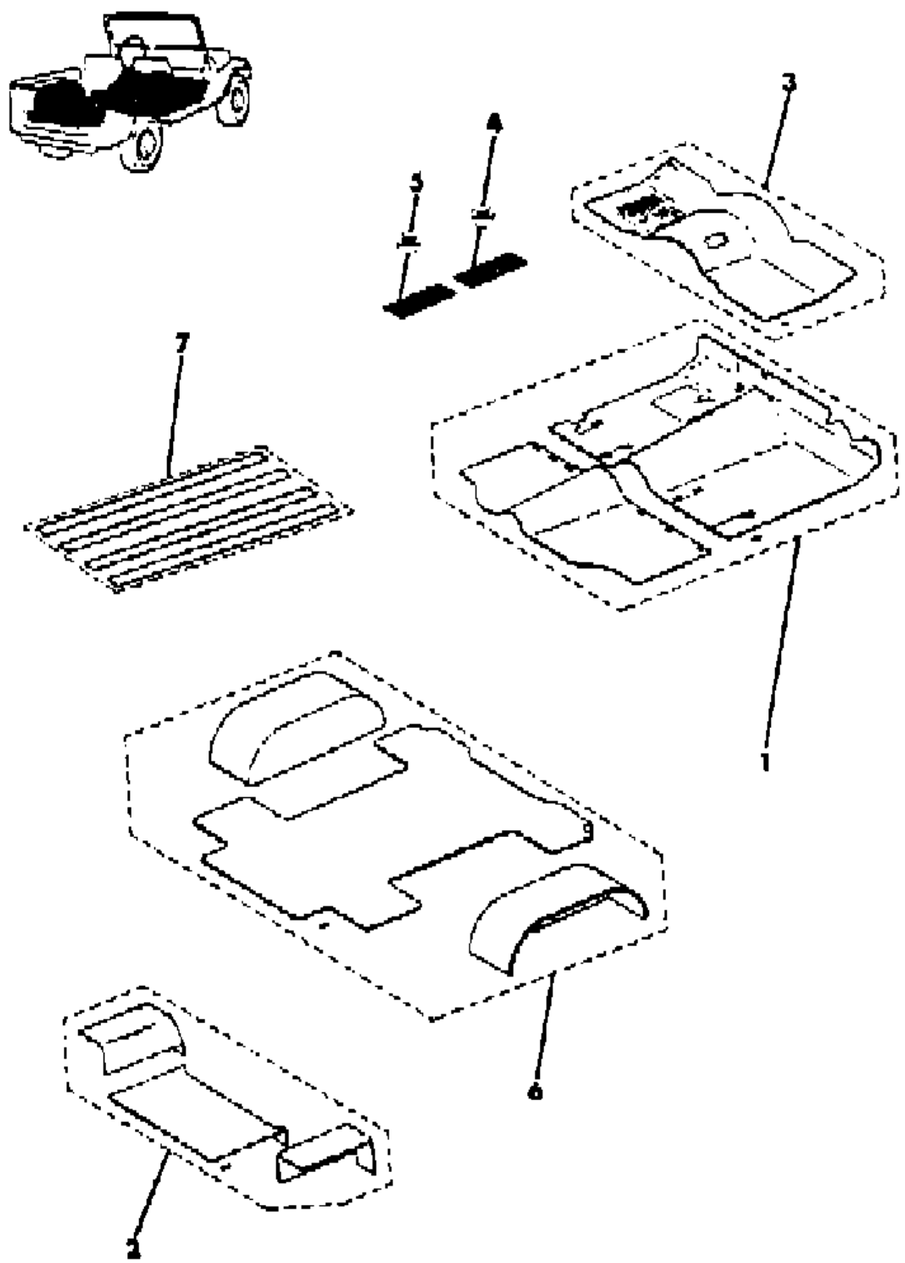

ITEM	PART NUMBER	QTY	BODY	MODEL	DESCRIPTION
	J813 4347	1		88	Nutmeg, without Full Soft Top, Used with Shoulder Type Seatbelts
	J813 3283	1		88	Nutmeg, with Full Soft Top, Used with Shoulder Type Seatbelts
2					CARPET, Rear
	J813 0742	1		85	Black
	J813 0740	1		87	Black, without Extra Quiet Insulation
	8350 0983	1		87	Black, with Extra Quiet Insulation
	8350 0668	1		87	Garnet, without Extra Quiet Insulation
	8350 0984	1		87	Garnet, with Extra Quiet Insulation
	8350 1581	1		87	Honey, without Extra Quiet Insulation
	8350 1583	1		87	Honey, with Extra Quiet Insulation
	J813 3304	1		85	Nutmeg
	J813 3303	1		87	Nutmeg, without Extra Quiet Insulation
	J813 3974	1		87	Nutmeg, with Extra Quiet Insulation
3					CARPET, Floor Mini
					Right Hand Drive
	J575 6633	1			Black
					Left Hand Drive
	J575 6627	1			Black
4	J368 9091	AR			FASTENER, Velcro Hook
5	J368 9095	AR			FASTENER, Velcro Loop
6					CARPET, Rear
	J813 3902	1		88	Black
	8350 1357	1		88	Garnet
	8350 1582	1		88	Honey
	J813 4781	1		88	Nutmeg
7	J805 2571	4			STRIP, Skid ***

MODEL CODES

16=Cherokee 2 Dr.(1981-83)	78=Cherokee 4WD-4 Dr.(1984-86)	64=Comanche 2WD-6 Ft. Box(1986)	25=J-10 Truck 7 Ft. Box(1981-84)
17=Cherokee 2 Dr.(1981-83)	85=CJ-5 (1981-83)	66=Comanche 2WD-7 Ft. Box(1986)	26=J10 Truck 8 Ft. Box(1981-86)
73=Cherokee 2WD-2 Dr.(1984-86)	86=CJ-6(1981)	63=Comanche 4WD-6 Ft. Box(1986)	27=J-20 Truck 8 Ft. Box(1981-86)
74=Cherokee 2WD-4 Dr.(1984-86)	87=CJ-7(1981-86)	65=Comanche 4WD-7 Ft. Box(1986)	15=Wagoneer 4 Dr.(1981-83)
18=Cherokee 4 Dr.(1981-83)	88=CJ-8, Scrambler(1981-86)	15=Grand Wagoneer 4 Dr.(1984-86)	75=Wagoneer 4WD-4 Dr.(1984-86)
77=Cherokee 4WD-2 Dr.(1984-86)			

BODY
CJ=CJ-5, CJ-6, CJ-7, CJ-8, Scrambler(1981-86)
MJ=Comanche Pickup(1986)

STYLES
SJ=Wagoneer(1981-83), Grand Wagoneer(1984-86), Cherokee(1981-83), J-10, J-20(1981-86)
XJ=Wagoneer(1984-86), Cherokee(1984-86)

AR = Use as Required - = Non Illustrated Part P.A.R. = Paint as Required

« RETURN TO GROUP INDEX

DOOR TRIM PANELS FULL HARD DOORS, WITHOUT WORLD CAB CJ-5,6,7,8, SCRAMBLER
Figure 46-800

81J 046 800

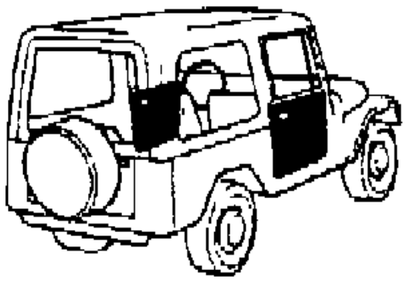

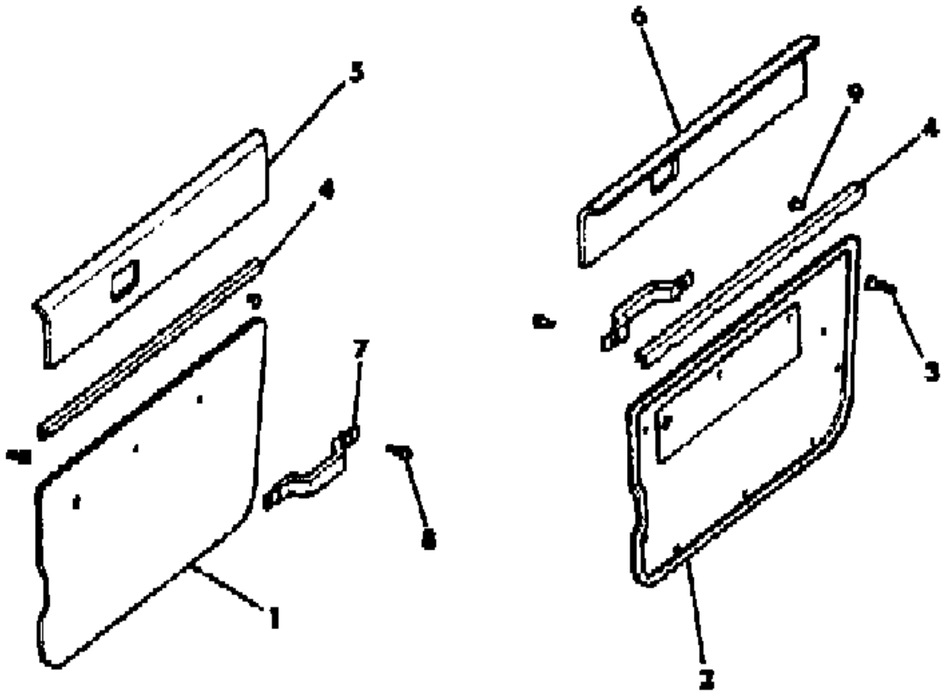

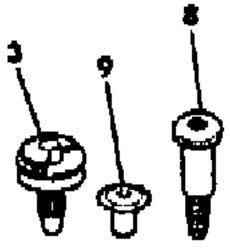

ITEM	PART NUMBER	QTY	BODY	MODEL	DESCRIPTION
1					PANEL, Door Trim
	J575 7707	1			1981: Black, One Piece, with Lever Type Outside Handle
	J575 5931	1			1981: Black, Lower, with Lever Type Outside Handle
	J575 7711	1			1981: Black, Upper, with Lever Type Outside Handle
	J575 7715	1			1981: Black, with CJ Embossment on Door, with Paddle Type Outside Handle
	J576 0175	1			1981-82: Black, without CJ Embossment on Door, without Laredo or Jamboree Models
	J576 4555	1			1983-86: Black, without Laredo or Jamboree Models
	J576 0711	1			1982: Black, Laredo or Jamboree Models
	J576 4561	1			1983-86: Black, Laredo or Jamboree Models
	J576 0657	1			1982-86: Blue, without Laredo or Jamboree Models
	J576 0823	1			1982: Blue, Laredo or Jamboree Models
	J576 2297	1			1983-86: Blue, Laredo or Jamboree Models
	J576 4559	1			1984-86: Garnet
	J576 5255	1			1985: Honey, without Laredo or Jamboree Models
	J576 5253	1			1985-86: Honey, Laredo or Jamboree Models
	J575 7709	1			1981: Nutmeg, One Piece, with Lever Type Outside Handle
	J575 5933	1			1981: Nutmeg, Lower, with Lever Type Outside Handle
	J575 5935	1			1981: Nutmeg, Upper, with Lever Type Outside Handle
	J575 7717	1			1981: Nutmeg, with CJ Embossment on Door, with Paddle Type Outside Handle
	J576 0177	1			1981-82: Nutmeg, without CJ Embossment on Door, without Laredo or Jamboree Models
	J576 4557	1			1983-86: Nutmeg, without Laredo or Jamboree Models
	J576 0713	1			1982: Nutmeg, Laredo or Jamboree Models
	J576 4563	1			1983-86: Nutmeg, Laredo or Jamboree Models
2					PANEL, Door Trim
	J575 7706	1			1981: Black, One Piece, with Lever Type Outside Handle
	J575 5930	1			1981: Black, Lower, with Lever Type Outside Handle
	J575 7710	1			1981: Black, Upper, with Lever Type Outside Handle
	J575 7714	1			1981: Black, with CJ Embossment on Door, with Paddle Type Outside Handle
	J576 0174	1			1981-82: Black, without CJ Embossment on Door, without Laredo or Jamboree Models
	J576 4554	1			1983-86: Black, without Laredo or Jamboree Models
	J576 2294	1			1982: Black, Laredo or Jamboree Models
	J576 4560	1			1983-86: Black, Laredo or Jamboree Models
	J576 0656	1			1982-86: Blue, without Laredo or Jamboree Models

MODEL CODES

16=Cherokee 2 Dr.(1981-83)
17=Cherokee 2 Dr.(1981-83)
73=Cherokee 2WD-2 Dr.(1984-86)
74=Cherokee 2WD-4 Dr.(1984-86)
18=Cherokee 4 Dr.(1981-83)
77=Cherokee 4WD-2 Dr.(1984-86)
78=Cherokee 4WD-4 Dr.(1984-86)
85=CJ-5 (1981-83)
86=CJ-6(1981)
87=CJ-7(1981-86)
88=CJ-8, Scrambler(1981-86)
64=Comanche 2WD-6 Ft. Box(1986)
66=Comanche 2WD-7 Ft. Box(1986)
63=Comanche 4WD-6 Ft. Box(1986)
65=Comanche 4WD-7 Ft. Box(1986)
15=Grand Wagoneer 4 Dr.(1984-86)
25=J-10 Truck 7 Ft. Box(1981-84)
26=J10 Truck 8 Ft. Box(1981-86)
27=J-20 Truck 8 Ft. Box(1981-86)
15=Wagoneer 4 Dr.(1981-83)
75=Wagoneer 4WD-4 Dr.(1984-86)

BODY
CJ=CJ-5, CJ-6, CJ-7, CJ-8, Scrambler(1981-86)
MJ=Comanche Pickup(1986)

STYLES
SJ=Wagoneer(1981-83), Grand Wagoneer(1984-86), Cherokee(1981-83), J-10, J-20(1981-86)
XJ=Wagoneer(1984-86), Cherokee(1984-86)

AR = Use as Required - = Non Illustrated Part P.A.R. = Paint as Required

DOOR TRIM PANELS FULL HARD DOORS, WITHOUT WORLD CAB CJ-5,6,7,8, SCRAMBLER
Figure 46-800

81J 046 800

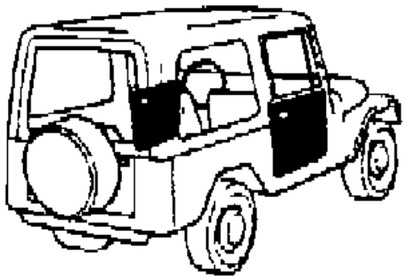

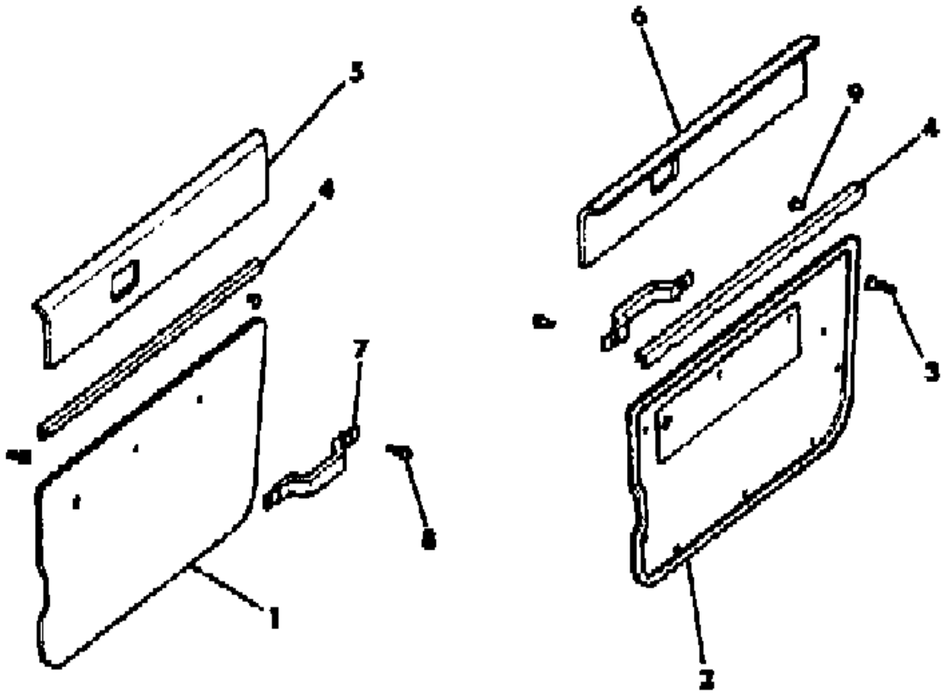

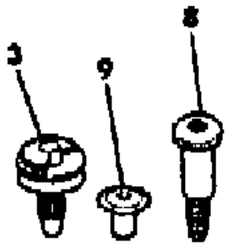

ITEM	PART NUMBER	QTY	BODY	MODEL	DESCRIPTION
	J576 0822	1			1982: Blue, Laredo or Jamboree Models
	J576 2296	1			1983-86: Blue, Laredo or Jamboree Models
	J576 4558	1			1984-86: Garnet
	J576 5254	1			1985: Honey, without Laredo or Jamboree Models
	J576 5252	1			1984-86: Honey, Laredo or Jamboree Models
	J575 7708	1			1981: Nutmeg, One Piece, with Lever Type Outside Handle
	J575 5932	1			1981: Nutmeg, Lower, with Lever Type Outside Handle
	J575 5934	1			1981: Nutmeg, Upper, with Lever Type Outside Handle
	J575 7716	1			1981: Nutmeg, with CJ Embossment on Door, with Paddle Type Outside Handle
	J576 0176	1			1981-82: Nutmeg, without CJ Embossment on Door, without Laredo or Jamboree Models
	J576 4556	1			1983-86: Nutmeg, without Laredo or Jamboree Models
	J576 0712	1			1982: Nutmeg, Laredo or Jamboree Models
	J576 4562	1			1983-86: Nutmeg, Laredo or Jamboree Models
3	J400 6176	14			FASTENER
4	J575 7742	2			RETAINER
5					PANEL, Door Trim Upper
	J576 0825	1			1982: Medium Blue
	J576 2219	1			1983-86: Slate Blue
	J576 0827	1			1982: Nutmeg
	J576 2217	1			1983-86: Nutmeg
6					PANEL, Door Trim Upper
	J576 0824	1			1982: Medium Blue
	J576 2220	1			1983-86: Slate Blue
	J576 0826	1			1982: Nutmeg
	J576 2218	1			1983-86: Nutmeg
7					HANDLE, Assist
	J545 7831	2			Black
	J576 0654	2			Blue
	J576 4553	2			Garnet
	J576 5256	2			Honey
	J575 5963	2			Nutmeg
8	J400 6136	4			SCREW
9	J400 4515	6			RIVET

MODEL CODES

16=Cherokee 2 Dr.(1981-83)
17=Cherokee 2 Dr.(1981-83)
73=Cherokee 2WD-2 Dr.(1984-86)
74=Cherokee 2WD-4 Dr.(1984-86)
18=Cherokee 4 Dr.(1981-83)
77=Cherokee 4WD-2 Dr.(1984-86)
78=Cherokee 4WD-4 Dr.(1984-86)
85=CJ-5 (1981-83)
86=CJ-6(1981)
87=CJ-7(1981-86)
88=CJ-8, Scrambler(1981-86)
64=Comanche 2WD-6 Ft. Box(1986)
66=Comanche 2WD-7 Ft. Box(1986)
63=Comanche 4WD-6 Ft. Box(1986)
65=Comanche 4WD-7 Ft. Box(1986)
15=Grand Wagoneer 4 Dr.(1984-86)
25=J-10 Truck 7 Ft. Box(1981-84)
26=J10 Truck 8 Ft. Box(1981-86)
27=J-20 Truck 8 Ft. Box(1981-86)
15=Wagoneer 4 Dr.(1981-83)
75=Wagoneer 4WD-4 Dr.(1984-86)

BODY
CJ=CJ-5, CJ-6, CJ-7, CJ-8, Scrambler(1981-86)
MJ=Comanche Pickup(1986)

STYLES
SJ=Wagoneer(1981-83), Grand Wagoneer(1984-86), Cherokee(1981-83), J-10, J-20(1981-86)
XJ=Wagoneer(1984-86), Cherokee(1984-86)

AR = Use as Required - = Non Illustrated Part P.A.R. = Paint as Required

« RETURN TO GROUP INDEX

DOOR TRIM PANELS FULL HARD DOORS, WITH WORLD CAB, EXPORT CJ -7,8
Figure 46-900

B1J 046 900

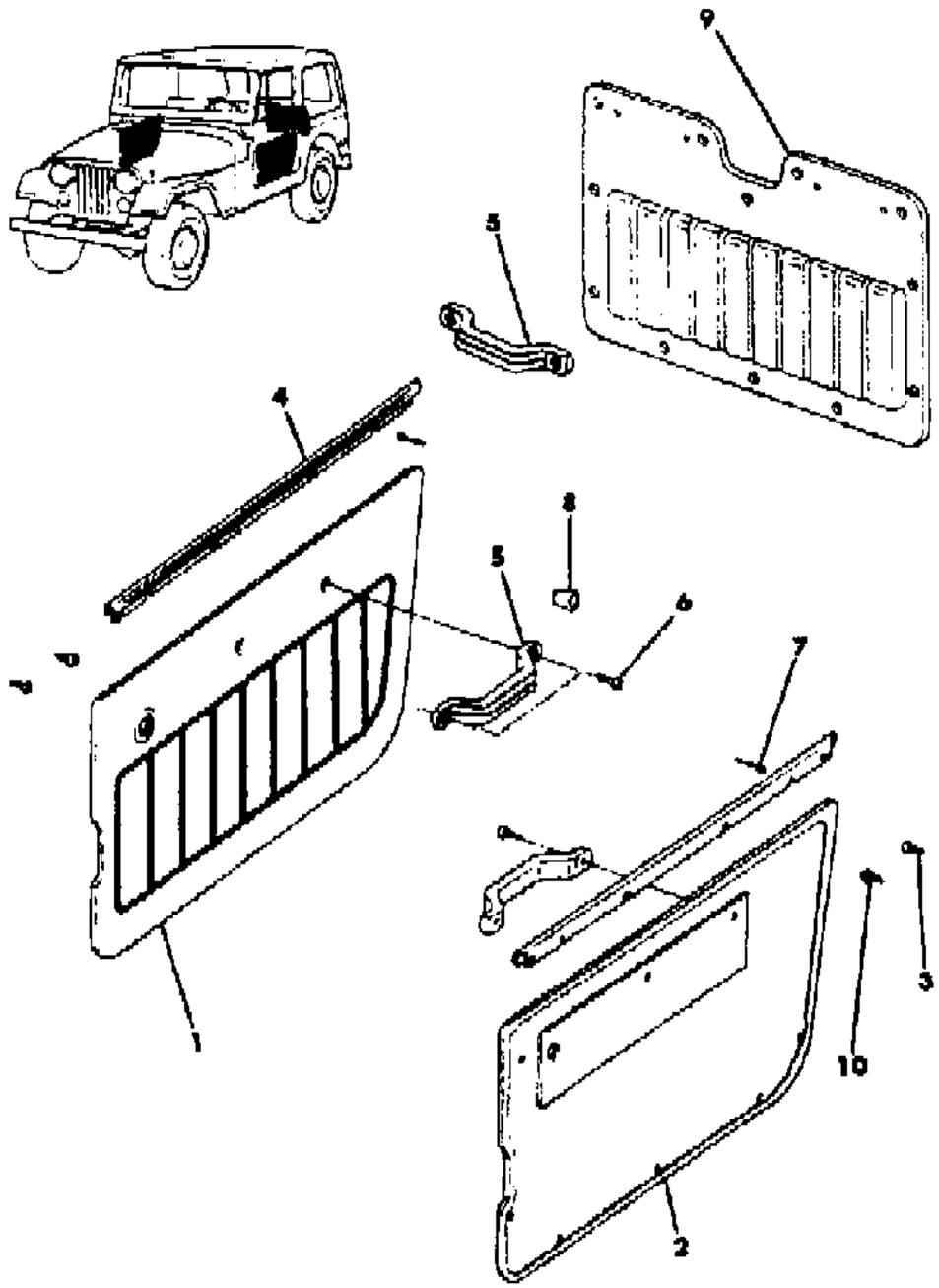

ITEM	PART NUMBER	QTY	BODY	MODEL	DESCRIPTION
1					PANEL, Door Trim
	J575 3367	1			Beige
	J576 0175	1			Black: 1982-83
	J576 4555	1			Black: 1984
	J576 5255	1			Honey
	J576 0177	1			Nutmeg: 1982-83
	J576 4557	1			Nutmeg: 1984
2					PANEL, Door Trim
	J575 3368	1			Beige
	J576 0174	1			Black: 1982-83
	J576 4554	1			Black: 1984
	J576 5254	1			Honey
	J576 0176	1			Nutmeg: 1982-83
	J576 4556	1			Nutmeg: 1984
3	J400 6444	AR			SCREW
4	J575 7742	2			RETAINER
5					HANDLE, Assist
	J805 3352	7			Almond
	J575 0739	7			Beige
	J545 7831	7			Black
	J576 4553	7			Garnet
	J576 5256	7			Honey
	J575 5963	7			Nutmeg
6	J400 6136	14			SCREW
7	J400 4515	14			RIVET
8	J400 7101	1			NUT
9					PANEL, Door Trim
	9500 0321	1			Almond Vinyl
	J805 2321	1			Beige, Vinyl
	J805 2319	1			Black Vinyl: 1982-83
	9500 0046	1			Black Vinyl: 1984
	9500 0640	1			Honey Vinyl
	J805 2320	1			Nutmeg Vinyl: 1982-83
	9500 0045	1			Nutmeg Vinyl: 1984
	J805 2422	1			Metal
10	J400 6176	AR			FASTENER

MODEL CODES

16=Cherokee 2 Dr.(1981-83)	78=Cherokee 4WD-4 Dr.(1984-86)	64=Comanche 2WD-6 Ft. Box(1986)	25=J-10 Truck 7 Ft. Box(1981-84)
17=Cherokee 2 Dr.(1981-83)	85=CJ-5 (1981-83)	66=Comanche 2WD-7 Ft. Box(1986)	26=J10 Truck 8 Ft. Box(1981-86)
73=Cherokee 2WD-2 Dr.(1984-86)	86=CJ-6(1981)	63=Comanche 4WD-6 Ft. Box(1986)	27=J-20 Truck 8 Ft. Box(1981-86)
74=Cherokee 2WD-4 Dr.(1984-86)	87=CJ-7(1981-86)	65=Comanche 4WD-7 Ft. Box(1986)	15=Wagoneer 4 Dr.(1981-83)
18=Cherokee 4 Dr.(1981-83)	88=CJ-8, Scrambler(1981-86)	15=Grand Wagoneer 4 Dr.(1984-86)	75=Wagoneer 4WD-4 Dr.(1984-86)
77=Cherokee 4WD-2 Dr.(1984-86)			

BODY
CJ=CJ-5, CJ-6, CJ-7, CJ-8, Scrambler(1981-86)
MJ=Comanche Pickup(1986)

STYLES
SJ=Wagoneer(1981-83), Grand Wagoneer(1984-86), Cherokee(1981-83), J-10, J-20(1981-86)
XJ=Wagoneer(1984-86), Cherokee(1984-86)

AR = Use as Required - = Non Illustrated Part P.A.R. = Paint as Required

« RETURN TO GROUP INDEX

FRAME AND PAD FRONT BUCKET SEAT CJ-5,6,7,8, SCRAMBLER
Figure 46-1000

81J 046 1000

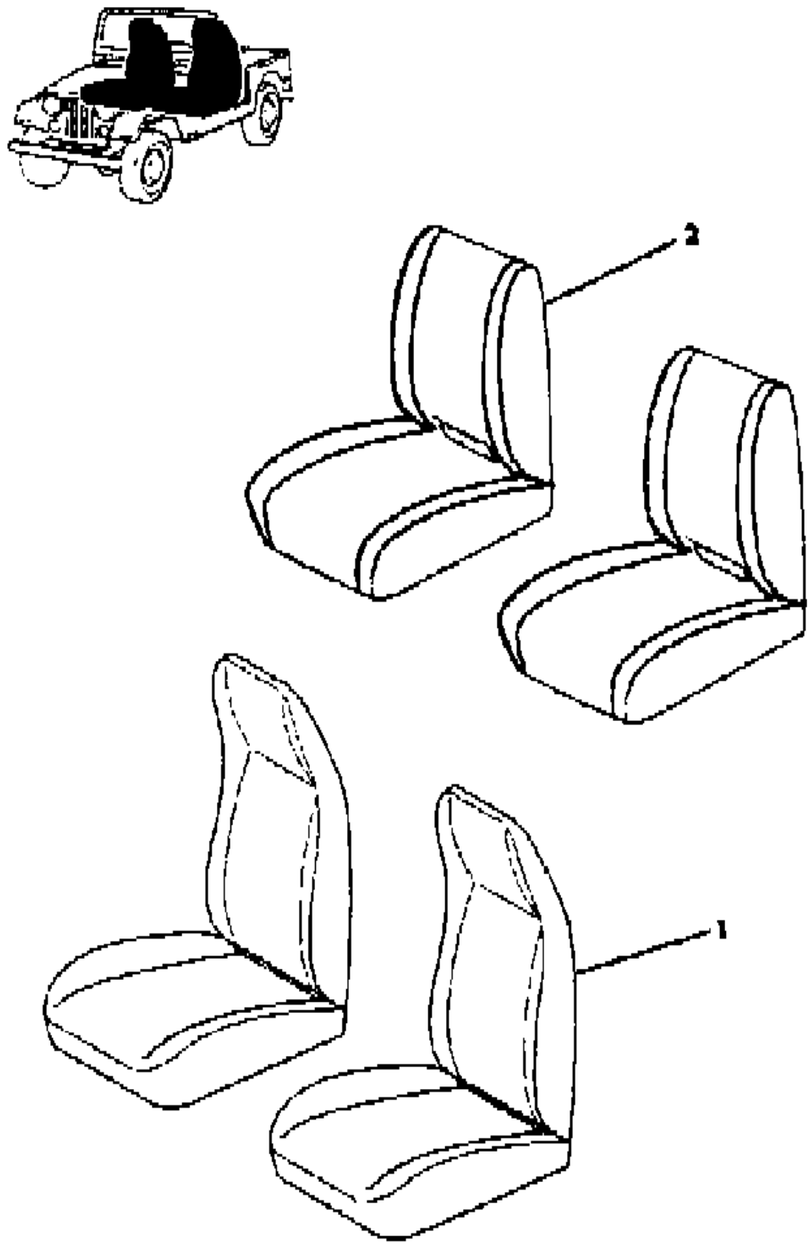

ITEM	PART NUMBER	QTY	BODY	MODEL	DESCRIPTION
1					FRAME, Seat, Including Pad
	J575 0571	2			With High Back Seat
2					FRAME, Seat, Including Pad
					With Low Back Seat
	J546 3018	2			1981: Frame Has Nontubular Type Construction
	J546 3553	2			1981: Frame Has a Tubular Type Construction
	J576 0404	2			1982-86

MODEL CODES

16=Cherokee 2 Dr.(1981-83)	78=Cherokee 4WD-4 Dr.(1984-86)	64=Comanche 2WD-6 Ft. Box(1986)	25=J-10 Truck 7 Ft. Box(1981-84)
17=Cherokee 2 Dr.(1981-83)	85=CJ-5 (1981-83)	66=Comanche 2WD-7 Ft. Box(1986)	26=J10 Truck 8 Ft. Box(1981-86)
73=Cherokee 2WD-2 Dr.(1984-86)	86=CJ-6(1981)	63=Comanche 4WD-6 Ft. Box(1986)	27=J-20 Truck 8 Ft. Box(1981-86)
74=Cherokee 2WD-4 Dr.(1984-86)	87=CJ-7(1981-86)	65=Comanche 4WD-7 Ft. Box(1986)	15=Wagoneer 4 Dr.(1981-83)
18=Cherokee 4 Dr.(1981-83)	88=CJ-8, Scrambler(1981-86)	15=Grand Wagoneer 4 Dr.(1984-86)	75=Wagoneer 4WD-4 Dr.(1984-86)
77=Cherokee 4WD-2 Dr.(1984-86)			

BODY
CJ=CJ-5, CJ-6, CJ-7, CJ-8, Scrambler(1981-86)
MJ=Comanche Pickup(1986)

STYLES
SJ=Wagoneer(1981-83), Grand Wagoneer(1984-86), Cherokee(1981-83), J-10, J-20(1981-86)
XJ=Wagoneer(1984-86), Cherokee(1984-86)

AR = Use as Required - = Non Illustrated Part P.A.R. = Paint as Required

« RETURN TO GROUP INDEX

FRAME AND PAD FRONT 1/3-2/3 SEAT, EXPORT CJ-5,6,7,8
Figure 46-1100

81J 046 1100

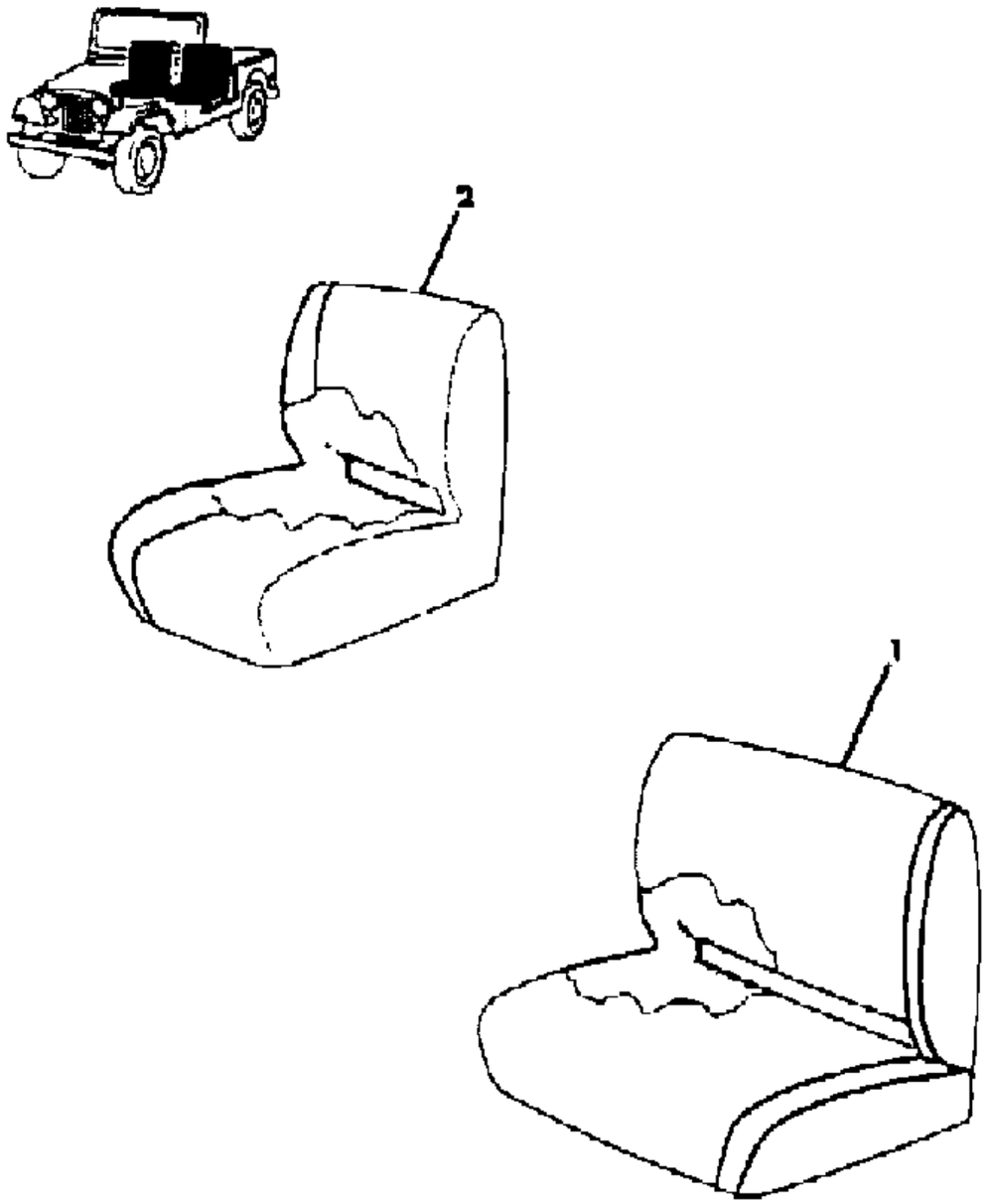

ITEM	PART NUMBER	QTY	BODY	MODEL	DESCRIPTION
1	J546 3555	1			FRAME, Seat, Including Pad
2	J546 3556	1			FRAME, Seat, Including Pad

MODEL CODES

16=Cherokee 2 Dr.(1981-83)
17=Cherokee 2 Dr.(1981-83)
73=Cherokee 2WD-2 Dr.(1984-86)
74=Cherokee 2WD-4 Dr.(1984-86)
18=Cherokee 4 Dr.(1981-83)
77=Cherokee 4WD-2 Dr.(1984-86)
78=Cherokee 4WD-4 Dr.(1984-86)
85=CJ-5 (1981-83)
86=CJ-6(1981)
87=CJ-7(1981-86)
88=CJ-8, Scrambler(1981-86)
64=Comanche 2WD-6 Ft. Box(1986)
66=Comanche 2WD-7 Ft. Box(1986)
63=Comanche 4WD-6 Ft. Box(1986)
65=Comanche 4WD-7 Ft. Box(1986)
15=Grand Wagoneer 4 Dr.(1984-86)
25=J-10 Truck 7 Ft. Box(1981-84)
26=J10 Truck 8 Ft. Box(1981-86)
27=J-20 Truck 8 Ft. Box(1981-86)
15=Wagoneer 4 Dr.(1981-83)
75=Wagoneer 4WD-4 Dr.(1984-86)

BODY
CJ=CJ-5, CJ-6, CJ-7, CJ-8, Scrambler(1981-86)
MJ=Comanche Pickup(1986)

STYLES
SJ=Wagoneer(1981-83), Grand Wagoneer(1984-86), Cherokee(1981-83), J-10, J-20(1981-86)
XJ=Wagoneer(1984-86), Cherokee(1984-86)

AR = Use as Required - = Non Illustrated Part P.A.R. = Paint as Required

« RETURN TO GROUP INDEX

COVERS, FRONT SEAT UPHOLSTERY HIGH BACK BUCKET SEATS CJ-5,6,7,8, SCRAMBLER
Figure 46-1200

81J 046 1200

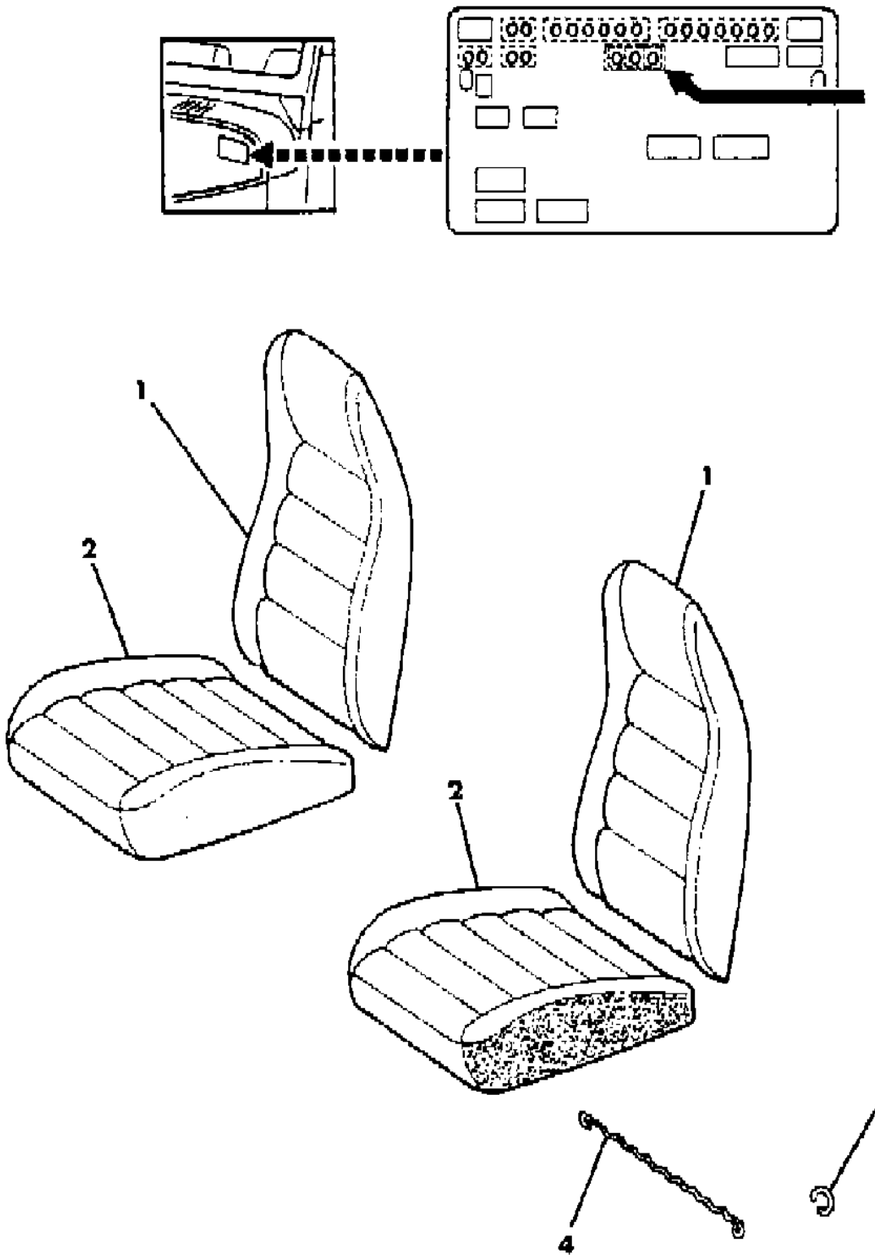

ITEM	PART NUMBER	QTY	BODY	MODEL	DESCRIPTION
1					COVER, Back
	J576 6490	2			Coded "1BA"or"1EA", 1985-86
	J575 5665	2			Coded "1EB", 1981-82
	J576 2070	2			Coded "1EB", 1983-85
	5500 9954	2			Coded "1EB", 1986
	5500 9549	2			Coded "1EE", 1985
	J575 6312	2			Coded "1EJ", 1981
	J576 0855	2			Coded "1EJ", 1982
	J576 2026	2			Coded "1EJ", 1983
	J576 4519	2			Coded "1EJ", 1984-86
	J576 3061	2			Coded "1EN", 1982
	J575 5633	2			Coded "3EB", 1981
	J576 0743	2			Coded "3EB", 1982
	J576 2071	2			Coded "3EB", 1983
	J576 0809	2			Coded "3EE", 1982
	J576 2032	2			Coded "3EE", 1983
	J576 4521	2			Coded "4EB", 1984-85
	5500 9955	2			Coded "4EB", 1986
	J575 5632	2			Coded "5EB", 1981-82
	J576 2072	2			Coded "5EB", 1983-84
	J576 0810	2			Coded "5EE", 1982
	J576 2033	2			Coded "5EE", 1983
	J575 5635	2			Coded "5EJ", 1981
	J576 0856	2			Coded "5EJ", 1982
	J576 2027	2			Coded "5EJ", 1983-84
	J576 0812	2			Coded "5EL", 1982
	J576 2830	2			Coded "5EL", 1983
	J576 6492	2			Coded "6EA", 1985
	5501 3428	2			Coded "9BA", 1986
	J576 6380	2			Coded "9EB", 1985
	5500 9956	2			Coded "9EB", 1986
	J576 6383	2			Coded "9EJ", 1985-86
2					COVER, Cushion
	J576 6491	2			Coded "1BA"or"1EA", 1985-86
	J575 5664	2			Coded "1EB", 1981-82
	J576 2067	2			Coded "1EB", 1983-85
	5500 9957	2			Coded "1EB", 1986
	5500 9548	2			Coded "1EE", 1985
	J575 6311	1			Coded "1EJ", 1981, Left

MODEL CODES

16=Cherokee 2 Dr.(1981-83)	78=Cherokee 4WD-4 Dr.(1984-86)	64=Comanche 2WD-6 Ft. Box(1986)	25=J-10 Truck 7 Ft. Box(1981-84)
17=Cherokee 2 Dr.(1981-83)	85=CJ-5 (1981-83)	66=Comanche 2WD-7 Ft. Box(1986)	26=J10 Truck 8 Ft. Box(1981-86)
73=Cherokee 2WD-2 Dr.(1984-86)	86=CJ-6(1981)	63=Comanche 4WD-6 Ft. Box(1986)	27=J-20 Truck 8 Ft. Box(1981-86)
74=Cherokee 2WD-4 Dr.(1984-86)	87=CJ-7(1981-86)	65=Comanche 4WD-7 Ft. Box(1986)	15=Wagoneer 4 Dr.(1981-83)
18=Cherokee 4 Dr.(1981-83)	88=CJ-8, Scrambler(1981-86)	15=Grand Wagoneer 4 Dr.(1984-86)	75=Wagoneer 4WD-4 Dr.(1984-86)
77=Cherokee 4WD-2 Dr.(1984-86)			

BODY
CJ=CJ-5, CJ-6, CJ-7, CJ-8, Scrambler(1981-86)
MJ=Comanche Pickup(1986)

STYLES
SJ=Wagoneer(1981-83), Grand Wagoneer(1984-86), Cherokee(1981-83), J-10, J-20(1981-86)
XJ=Wagoneer(1984-86), Cherokee(1984-86)

AR = Use as Required - = Non Illustrated Part P.A.R. = Paint as Required

COVERS, FRONT SEAT UPHOLSTERY HIGH BACK BUCKET SEATS CJ-5,6,7,8, SCRAMBLER
Figure 46-1200

81J 046 1200

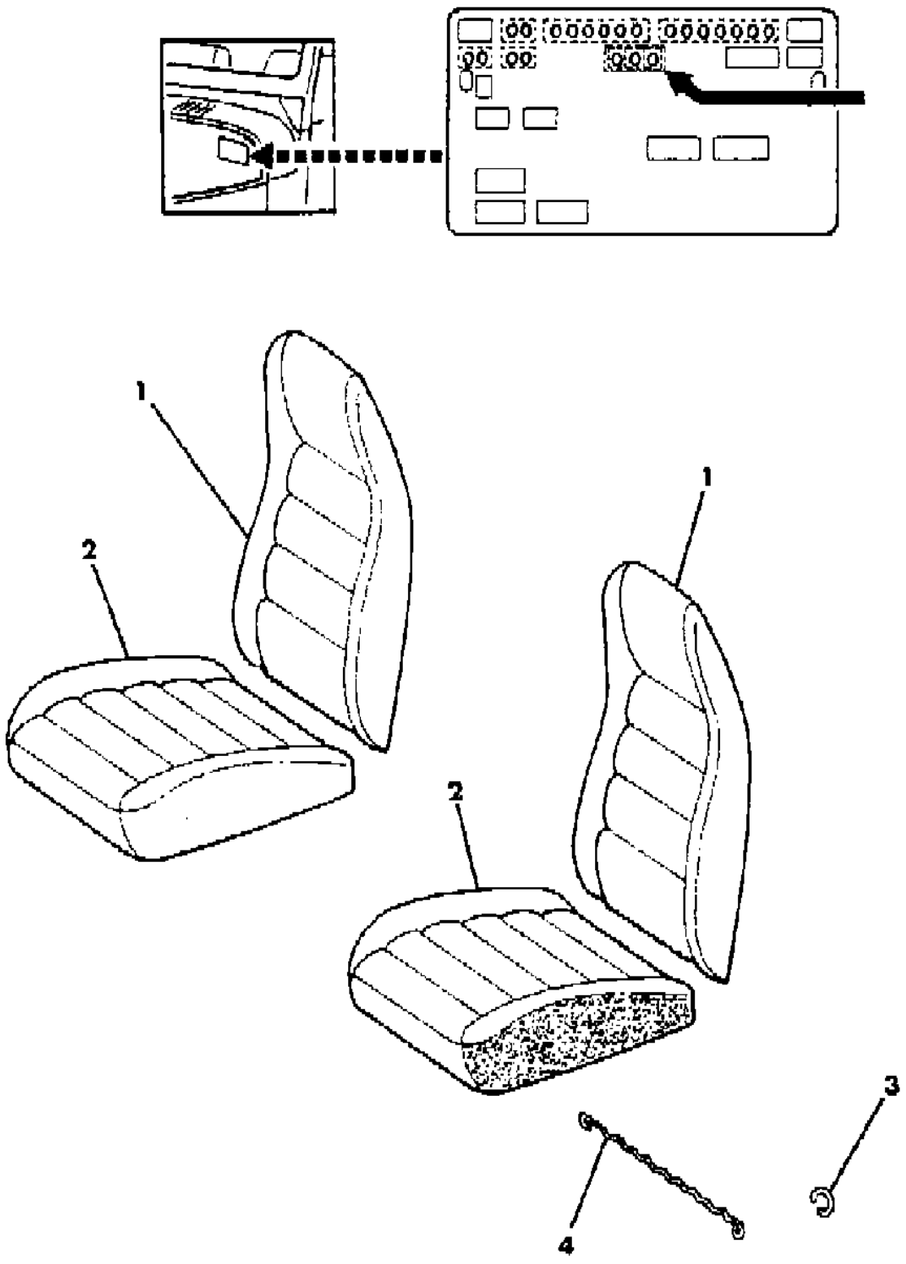

ITEM	PART NUMBER	QTY	BODY	MODEL	DESCRIPTION
	J575 6313	1			Coded "1EJ", 1981, Right
	J576 0857	1			Coded "1EJ", 1982, Left
	J576 0859	1			Coded "1EJ", 1982, Right
	J576 2024	1			Coded "1EJ", 1983, Left
	J576 2028	1			Coded "1EJ", 1983, Right
	J576 4517	1			Coded "1EJ", 1984-86, Left
	J576 4518	1			Coded "1EJ", 1984-86, Right
	J576 3060	1			Coded "1EN", 1982, Left
	J576 3062	1			Coded "1EN", 1982, Right
	J575 5631	2			Coded "3EB", 1981
	J576 0742	2			Coded "3EB", 1982
	J576 2068	2			Coded "3EB", 1983
	J576 0801	1			Coded "3EE", 1982, Left
	J576 0805	1			Coded "3EE", 1982, Right
	J576 2030	1			Coded "3EE", 1983, Left
	J576 2034	1			Coded "3EE", 1983, Right
	J576 4520	2			Coded "4EB", 1984-85
	5500 9958	2			Coded "4EB", 1986
	J575 5630	2			Coded "5EB", 1981-82
	J576 2069	2			Coded "5EB", 1983-84
	J576 0802	1			Coded "5EE", 1982, Left
	J576 0806	1			Coded "5EE", 1982, Right
	J576 2031	1			Coded "5EE", 1983, Left
	J576 2035	1			Coded "5EE", 1983, Right
	J575 5634	1			Coded "5EJ", 1981, Left
	J575 5636	1			Coded "5EJ", 1981, Right
	J576 0858	1			Coded "5EJ", 1982, Left
	J576 0860	1			Coded "5EJ", 1982, Right
	J576 2025	1			Coded "5EJ", 1983-84, Left
	J576 2029	1			Coded "5EJ", 1983-84, Right
	J576 0804	1			Coded "5EL", 1982, Left
	J576 0808	1			Coded "5EL", 1982, Right
	J576 2827	1			Coded "5EL", 1983, Left
	J576 2826	1			Coded "5EL", 1983, Right
	J576 6493	2			Coded "6EA", 1985
	5501 3429	2			Coded "9BA", 1986
	J576 6379	2			Coded "9EB", 1985
	5500 9959	2			Coded "9EB", 1986
	J576 6381	1			Coded "9EJ", 1985-86, Left

MODEL CODES

16=Cherokee 2 Dr.(1981-83)	78=Cherokee 4WD-4 Dr.(1984-86)	64=Comanche 2WD-6 Ft. Box(1986)	25=J-10 Truck 7 Ft. Box(1981-84)
17=Cherokee 2 Dr.(1981-83)	85=CJ-5 (1981-83)	66=Comanche 2WD-7 Ft. Box(1986)	26=J10 Truck 8 Ft. Box(1981-86)
73=Cherokee 2WD-2 Dr.(1984-86)	86=CJ-6(1981)	63=Comanche 4WD-6 Ft. Box(1986)	27=J-20 Truck 8 Ft. Box(1981-86)
74=Cherokee 2WD-4 Dr.(1984-86)	87=CJ-7(1981-86)	65=Comanche 4WD-7 Ft. Box(1986)	15=Wagoneer 4 Dr.(1981-83)
18=Cherokee 4 Dr.(1981-83)	88=CJ-8, Scrambler(1981-86)	15=Grand Wagoneer 4 Dr.(1984-86)	75=Wagoneer 4WD-4 Dr.(1984-86)
77=Cherokee 4WD-2 Dr.(1984-86)			

BODY
CJ=CJ-5, CJ-6, CJ-7, CJ-8, Scrambler(1981-86)
MJ=Comanche Pickup(1986)

STYLES
SJ=Wagoneer(1981-83), Grand Wagoneer(1984-86), Cherokee(1981-83), J-10, J-20(1981-86)
XJ=Wagoneer(1984-86), Cherokee(1984-86)

AR = Use as Required - = Non Illustrated Part P.A.R. = Paint as Required

COVERS, FRONT SEAT UPHOLSTERY HIGH BACK BUCKET SEATS CJ-5,6,7,8, SCRAMBLER
Figure 46-1200

81J 046 1200

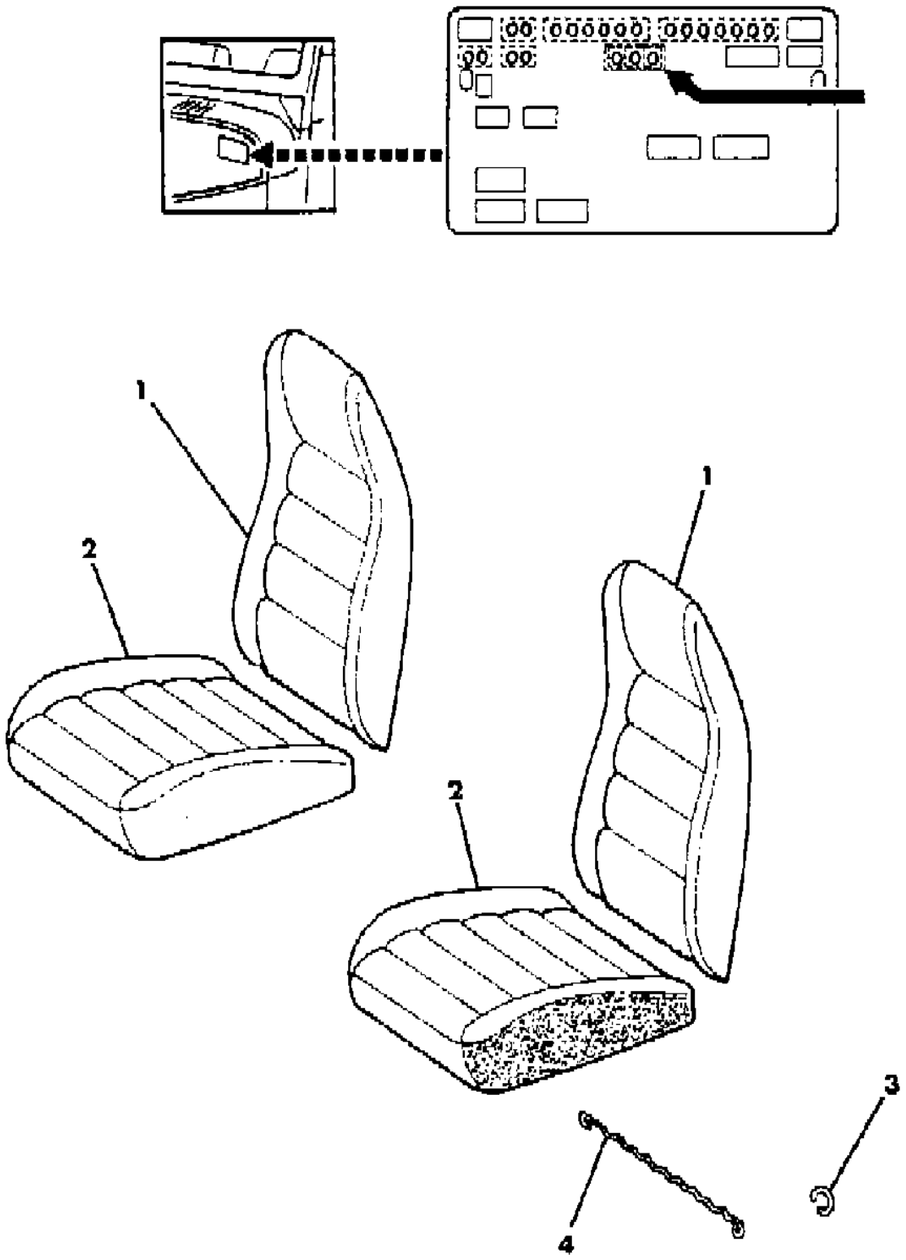

ITEM	PART NUMBER	QTY	BODY	MODEL	DESCRIPTION
	J576 6382	1			Coded "9EJ", 1985-86, Right
3					RING
	J400 0251	AR			.50"
	J436 3256	AR			.75"
4	J362 1468	AR			WIRE

MODEL CODES

16=Cherokee 2 Dr.(1981-83)	78=Cherokee 4WD-4 Dr.(1984-86)	64=Comanche 2WD-6 Ft. Box(1986)	25=J-10 Truck 7 Ft. Box(1981-84)
17=Cherokee 2 Dr.(1981-83)	85=CJ-5 (1981-83)	66=Comanche 2WD-7 Ft. Box(1986)	26=J10 Truck 8 Ft. Box(1981-86)
73=Cherokee 2WD-2 Dr.(1984-86)	86=CJ-6(1981)	63=Comanche 4WD-6 Ft. Box(1986)	27=J-20 Truck 8 Ft. Box(1981-86)
74=Cherokee 2WD-4 Dr.(1984-86)	87=CJ-7(1981-86)	65=Comanche 4WD-7 Ft. Box(1986)	15=Wagoneer 4 Dr.(1981-83)
18=Cherokee 4 Dr.(1981-83)	88=CJ-8, Scrambler(1981-86)	15=Grand Wagoneer 4 Dr.(1984-86)	75=Wagoneer 4WD-4 Dr.(1984-86)
77=Cherokee 4WD-2 Dr.(1984-86)			

BODY
CJ=CJ-5, CJ-6, CJ-7, CJ-8, Scrambler(1981-86)
MJ=Comanche Pickup(1986)

STYLES
SJ=Wagoneer(1981-83), Grand Wagoneer(1984-86), Cherokee(1981-83), J-10, J-20(1981-86)
XJ=Wagoneer(1984-86), Cherokee(1984-86)

AR = Use as Required - = Non Illustrated Part P.A.R. = Paint as Required

« RETURN TO GROUP INDEX

COVERS, FRONT SEAT UPHOLSTERY LOW BACK BUCKET SEATS CJ-5,6,7,8, SCRAMBLER
Figure 46-1300

81J 046 1300

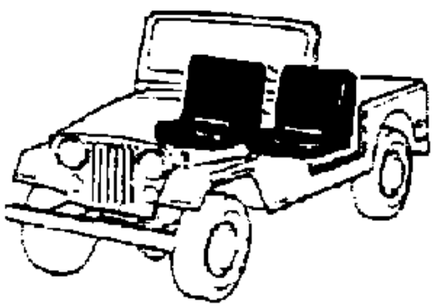

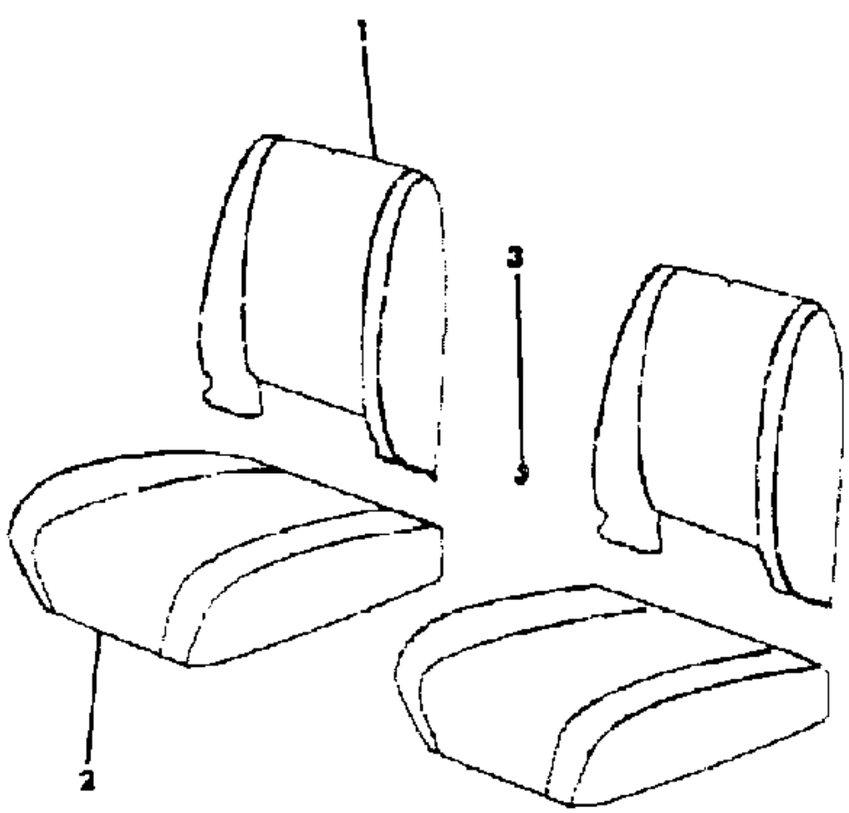

ITEM	PART NUMBER	QTY	BODY	MODEL	DESCRIPTION
1					COVER, Back
	J576 0407	2			Coded "1BA", 1981-82, without CJ Embossment
	J575 3406	2			Coded "1BA", 1981, with CJ Embossment
	J576 2828	2			Coded "1BA", 1983
	J576 4515	2			Coded "1BA", 1984
	J576 0406	2			Coded "6BA", 1981-82, without CJ Embossment
	J575 5629	2			Coded "6BA", 1981, with CJ Embossment
	J576 2829	2			Coded "6BA", 1983
	J576 4516	2			Coded "6BA", 1984
2					COVER, Cushion
	J575 3404	2			Coded "1BA", 1981-82
	J576 2824	2			Coded "1BA", 1983
	J576 4513	2			Coded "1BA", 1984
	J575 5628	2			Coded "6BA", 1981-82
	J576 2825	2			Coded "6BA", 1983
	J576 4514	2			Coded "6BA", 1984
3	J436 3256	AR			RING

MODEL CODES

16=Cherokee 2 Dr.(1981-83)
17=Cherokee 2 Dr.(1981-83)
73=Cherokee 2WD-2 Dr.(1984-86)
74=Cherokee 2WD-4 Dr.(1984-86)
18=Cherokee 4 Dr.(1981-83)
77=Cherokee 4WD-2 Dr.(1984-86)
78=Cherokee 4WD-4 Dr.(1984-86)
85=CJ-5 (1981-83)
86=CJ-6(1981)
87=CJ-7(1981-86)
88=CJ-8, Scrambler(1981-86)
64=Comanche 2WD-6 Ft. Box(1986)
66=Comanche 2WD-7 Ft. Box(1986)
63=Comanche 4WD-6 Ft. Box(1986)
65=Comanche 4WD-7 Ft. Box(1986)
15=Grand Wagoneer 4 Dr.(1984-86)
25=J-10 Truck 7 Ft. Box(1981-84)
26=J10 Truck 8 Ft. Box(1981-86)
27=J-20 Truck 8 Ft. Box(1981-86)
15=Wagoneer 4 Dr.(1981-83)
75=Wagoneer 4WD-4 Dr.(1984-86)

BODY
CJ=CJ-5, CJ-6, CJ-7, CJ-8, Scrambler(1981-86)
MJ=Comanche Pickup(1986)

STYLES
SJ=Wagoneer(1981-83), Grand Wagoneer(1984-86), Cherokee(1981-83), J-10, J-20(1981-86)
XJ=Wagoneer(1984-86), Cherokee(1984-86)

AR = Use as Required - = Non Illustrated Part P.A.R. = Paint as Required

« RETURN TO GROUP INDEX

COVERS, FRONT SEAT UPHOLSTERY 1/3-2/3 SEATS CJ-5,6,7,8, SCRAMBLER
Figure 46-1400

81J 045 1400

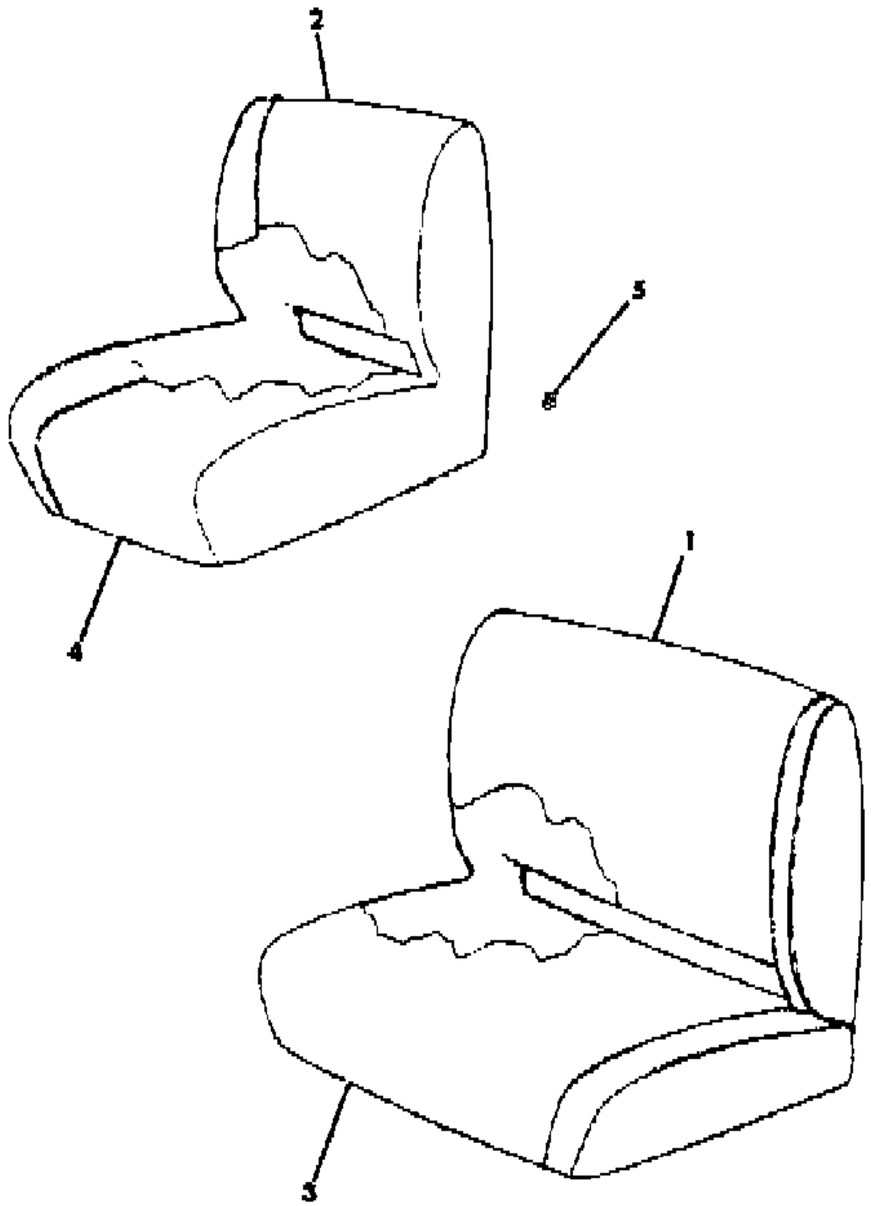

ITEM	PART NUMBER	QTY	BODY	MODEL	DESCRIPTION
1					COVER, Back
	J575 4099	1			Coded "1FA", 1981-82
	J576 2943	1			Coded "1FA", 1983
	J576 4314	1			Coded "1FA", 1984-86
	J575 5174	1			Coded "6FA", 1981-82
	J576 2944	1			Coded "6FA", 1983
	J576 4315	1			Coded "6FA", 1984-86
	5501 3431	1			Coded "9FA", 1986
2					COVER, Back
	J575 4103	1			Coded "1FA", 1981-82
	J576 2945	1			Coded "1FA", 1983
	J576 4318	1			Coded "1FA", 1984-86
	J575 5176	1			Coded "6FA", 1981-82
	J576 2946	1			Coded "6FA", 1983
	J576 4319	1			Coded "6FA", 1984-86
	5501 3433	1			Coded "9FA", 1986
3					COVER, Cushion
	J575 4097	1			Coded "1FA", 1981-82
	J576 2939	1			Coded "1FA", 1983
	J576 4312	1			Coded "1FA", 1984-86
	J575 5173	1			Coded "6FA", 1981-82
	J576 2940	1			Coded "6FA", 1983
	J576 4313	1			Coded "6FA", 1984-86
	5501 3430	1			Coded "9FA", 1986
4					COVER, Cushion
	J575 4101	1			Coded "1FA", 1981-82
	J576 2941	1			Coded "1FA", 1983
	J576 4316	1			Coded "1FA", 1984-86
	J575 5175	1			Coded "6FA", 1981-82
	J576 2942	1			Coded "6FA", 1983
	J576 4317	1			Coded "6FA", 1984-86
	5501 3432	1			Coded "9FA", 1986
5	J436 3256	AR			RING

MODEL CODES

16=Cherokee 2 Dr.(1981-83)	78=Cherokee 4WD-4 Dr.(1984-86)	64=Comanche 2WD-6 Ft. Box(1986)	25=J-10 Truck 7 Ft. Box(1981-84)
17=Cherokee 2 Dr.(1981-83)	85=CJ-5 (1981-83)	66=Comanche 2WD-7 Ft. Box(1986)	26=J10 Truck 8 Ft. Box(1981-86)
73=Cherokee 2WD-2 Dr.(1984-86)	86=CJ-6(1981)	63=Comanche 4WD-6 Ft. Box(1986)	27=J-20 Truck 8 Ft. Box(1981-86)
74=Cherokee 2WD-4 Dr.(1984-86)	87=CJ-7(1981-86)	65=Comanche 4WD-7 Ft. Box(1986)	15=Wagoneer 4 Dr.(1981-83)
18=Cherokee 4 Dr.(1981-83)	88=CJ-8, Scrambler(1981-86)	15=Grand Wagoneer 4 Dr.(1984-86)	75=Wagoneer 4WD-4 Dr.(1984-86)
77=Cherokee 4WD-2 Dr.(1984-86)			

BODY
CJ=CJ-5, CJ-6, CJ-7, CJ-8, Scrambler(1981-86)
MJ=Comanche Pickup(1986)

STYLES
SJ=Wagoneer(1981-83), Grand Wagoneer(1984-86), Cherokee(1981-83), J-10, J-20(1981-86)
XJ=Wagoneer(1984-86), Cherokee(1984-86)

AR = Use as Required - = Non Illustrated Part P.A.R. = Paint as Required

« RETURN TO GROUP INDEX

FRAME AND PAD REAR FIXED SEAT CJ-5,6,7,8, SCRAMBLER
Figure 46-1500

81J 046 1500

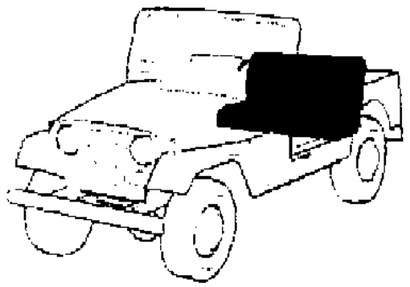

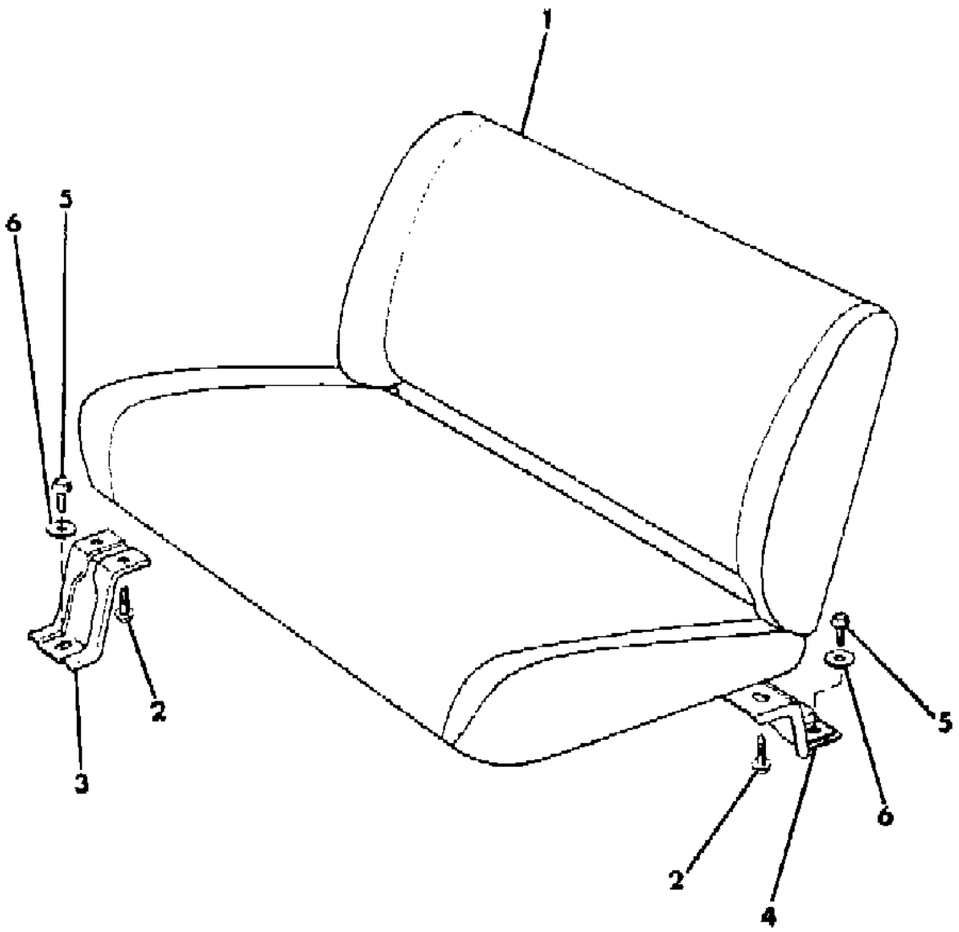

ITEM	PART NUMBER	QTY	BODY	MODEL	DESCRIPTION
1	J546 3554	1			FRAME, Seat, Including Pad
2	J400 4455	8			SCREW
3	J545 3869	2			SUPPORT, Cushion
4	J545 7354	1			SUPPORT, Cushion
5	J400 5804	5			BOLT
6	J064 2339	3			WASHER

MODEL CODES

16=Cherokee 2 Dr.(1981-83)
17=Cherokee 2 Dr.(1981-83)
73=Cherokee 2WD-2 Dr.(1984-86)
74=Cherokee 2WD-4 Dr.(1984-86)
18=Cherokee 4 Dr.(1981-83)
77=Cherokee 4WD-2 Dr.(1984-86)
78=Cherokee 4WD-4 Dr.(1984-86)
85=CJ-5 (1981-83)
86=CJ-6(1981)
87=CJ-7(1981-86)
88=CJ-8, Scrambler(1981-86)
64=Comanche 2WD-6 Ft. Box(1986)
66=Comanche 2WD-7 Ft. Box(1986)
63=Comanche 4WD-6 Ft. Box(1986)
65=Comanche 4WD-7 Ft. Box(1986)
15=Grand Wagoneer 4 Dr.(1984-86)
25=J-10 Truck 7 Ft. Box(1981-84)
26=J10 Truck 8 Ft. Box(1981-86)
27=J-20 Truck 8 Ft. Box(1981-86)
15=Wagoneer 4 Dr.(1981-83)
75=Wagoneer 4WD-4 Dr.(1984-86)

BODY
CJ=CJ-5, CJ-6, CJ-7, CJ-8, Scrambler(1981-86)
MJ=Comanche Pickup(1986)

STYLES
SJ=Wagoneer(1981-83), Grand Wagoneer(1984-86), Cherokee(1981-83), J-10, J-20(1981-86)
XJ=Wagoneer(1984-86), Cherokee(1984-86)

AR = Use as Required - = Non Illustrated Part P.A.R. = Paint as Required

« RETURN TO GROUP INDEX

FRAME AND PAD REAR FOLD AND TUMBLE SEAT CJ-5,6,7,8, SCRAMBLER
Figure 46-1600

81J 046 1600

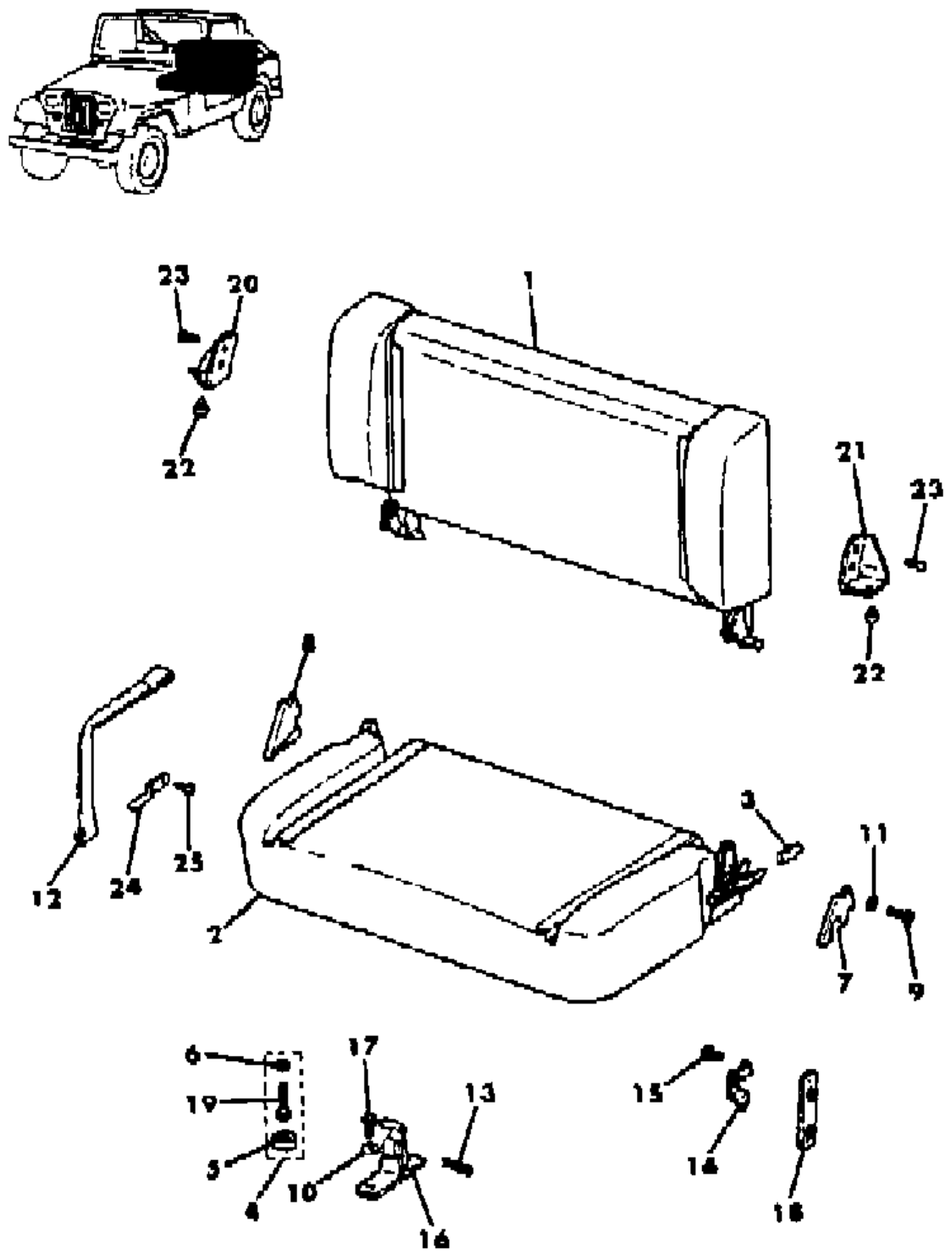

ITEM	PART NUMBER	QTY	BODY	MODEL	DESCRIPTION
1					FRAME, Seat Back, Including Pad
	5500 7757	1			1985-86
	5500 7757	1			1985-86: Australian Design Rules, Non-Regulated Markets
	5500 9426	1			1985: Economic Commission of Europe
	5500 9426	1		87	1986: Economic Commission of Europe
	5501 2605	1		88	1986: Economic Commission of Europe
2	5500 7755	1			FRAME, Cushion, Including Pad
3	5500 8065	2			COVER, Latch
4	J576 6316	3			SUPPORT, Cushion
5	J095 8556	3			BUMPER
6	J012 0376	3			NUT
7	5500 7753	1			COVER, Hinge
8	5500 7752	1			COVER, Hinge
9	3420 2315	4			BOLT
10	J400 7317	2			WASHER
11	J400 7315	2			WASHER
12	5500 9118	1			STRAP
13	J400 6061	2			PIN, Locking
14	5500 7759	2			BRACKET, Lock Striker
15	J400 5603	4			SCREW
16	J576 6317	2			BRACKET, Pivot
17	J400 4626	4			SCREW
18	5500 7760	2			REINFORCEMENT
19	J096 8343	3			SCREW
20					BRACKET, Seat Back
	5500 9424	1			Economic Commission of Europe
21					BRACKET, Seat Back
	5500 9425	1			Economic Commission of Europe
22					BUMPER
	J323 4895	2			Economic Commission of Europe
23					BOLT
	J018 0016	4			Economic Commission of Europe
24	5500 9117	1			BRACKET
25	J400 2461	2			SCREW

MODEL CODES

16=Cherokee 2 Dr.(1981-83)	78=Cherokee 4WD-4 Dr.(1984-86)	64=Comanche 2WD-6 Ft. Box(1986)	25=J-10 Truck 7 Ft. Box(1981-84)
17=Cherokee 2 Dr.(1981-83)	85=CJ-5 (1981-83)	66=Comanche 2WD-7 Ft. Box(1986)	26=J10 Truck 8 Ft. Box(1981-86)
73=Cherokee 2WD-2 Dr.(1984-86)	86=CJ-6(1981)	63=Comanche 4WD-6 Ft. Box(1986)	27=J-20 Truck 8 Ft. Box(1981-86)
74=Cherokee 2WD-4 Dr.(1984-86)	87=CJ-7(1981-86)	65=Comanche 4WD-7 Ft. Box(1986)	15=Wagoneer 4 Dr.(1981-83)
18=Cherokee 4 Dr.(1981-83)	88=CJ-8, Scrambler(1981-86)	15=Grand Wagoneer 4 Dr.(1984-86)	75=Wagoneer 4WD-4 Dr.(1984-86)
77=Cherokee 4WD-2 Dr.(1984-86)			

BODY
CJ=CJ-5, CJ-6, CJ-7, CJ-8, Scrambler(1981-86)
MJ=Comanche Pickup(1986)

STYLES
SJ=Wagoneer(1981-83), Grand Wagoneer(1984-86), Cherokee(1981-83), J-10, J-20(1981-86)
XJ=Wagoneer(1984-86), Cherokee(1984-86)

AR = Use as Required - = Non Illustrated Part P.A.R. = Paint as Required

« RETURN TO GROUP INDEX

FRAME AND PAD REAR LONGITUDINAL SEAT, EXPORT CJ-8 WITHOUT WORLD CAB
Figure 46-1700

81J 046 1700

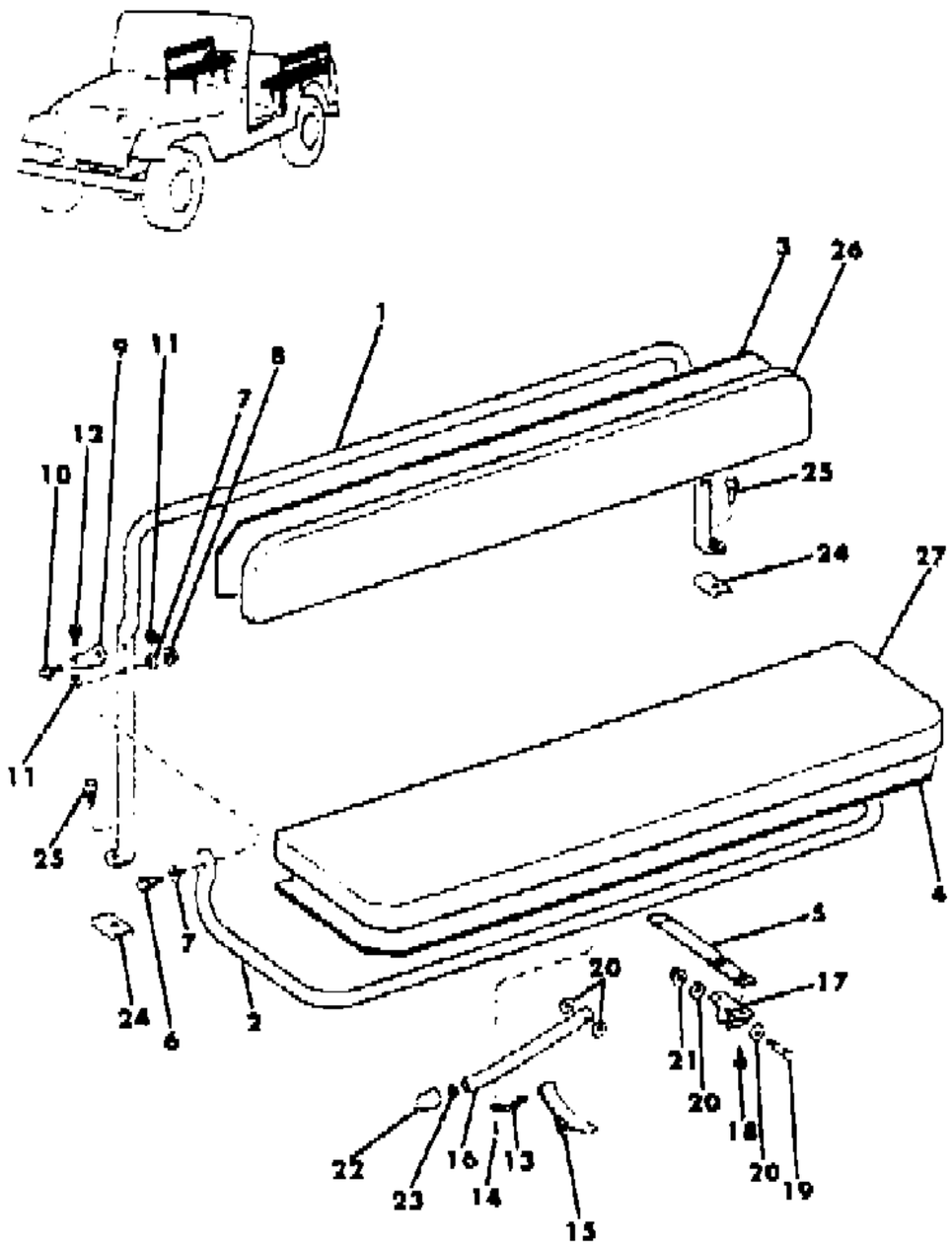

ITEM	PART NUMBER	QTY	BODY	MODEL	DESCRIPTION
1	J575 8742	2			FRAME, Back
2					FRAME, Cushion
	J575 8739	1			Right
	J575 8759	1			Left
3	J575 8730	2			PANEL, Seat Back
4	J575 8726	2			PANEL, Seat Cushion
5	J575 8760	4			REINFORCEMENT, Seat
6	J400 5655	4			SCREW
7	J400 6696	8			WASHER
8	J400 3587	4			NUT
9					BRACKET
	J575 8756	1			Right
	J575 8757	1			Left
10	J400 6393	4			SCREW
11	J400 4587	8			NUT
12	J400 4986	4			BOLT
13	J545 5264	2			LOOP, Footman ***
14	S016 3470	4			SCREW
15	J095 5215	2			STRAP
16	J575 8748	4			SUPPORT
17	J575 8750	4			BRACKET, Pivot
18	J400 5354	8			SCREW
19	J400 6490	4			BOLT
20	J400 2086	16			WASHER
21	J400 3587	4			NUT
22	J081 6278	4			COVER
23	J012 0388	4			WASHER
24	J575 8882	4			REINFORCEMENT
25	J545 0077	4			BOLT
26	J575 8725	2			PAD, Back
27	J575 8724	2			PAD, Cushion

MODEL CODES

16=Cherokee 2 Dr.(1981-83)
17=Cherokee 2 Dr.(1981-83)
73=Cherokee 2WD-2 Dr.(1984-86)
74=Cherokee 2WD-4 Dr.(1984-86)
18=Cherokee 4 Dr.(1981-83)
77=Cherokee 4WD-2 Dr.(1984-86)
78=Cherokee 4WD-4 Dr.(1984-86)
85=CJ-5 (1981-83)
86=CJ-6(1981)
87=CJ-7(1981-86)
88=CJ-8, Scrambler(1981-86)
64=Comanche 2WD-6 Ft. Box(1986)
66=Comanche 2WD-7 Ft. Box(1986)
63=Comanche 4WD-6 Ft. Box(1986)
65=Comanche 4WD-7 Ft. Box(1986)
15=Grand Wagoneer 4 Dr.(1984-86)
25=J-10 Truck 7 Ft. Box(1981-84)
26=J10 Truck 8 Ft. Box(1981-86)
27=J-20 Truck 8 Ft. Box(1981-86)
15=Wagoneer 4 Dr.(1981-83)
75=Wagoneer 4WD-4 Dr.(1984-86)

BODY
CJ=CJ-5, CJ-6, CJ-7, CJ-8, Scrambler(1981-86)
MJ=Comanche Pickup(1986)

STYLES
SJ=Wagoneer(1981-83), Grand Wagoneer(1984-86), Cherokee(1981-83), J-10, J-20(1981-86)
XJ=Wagoneer(1984-86), Cherokee(1984-86)

AR = Use as Required - = Non Illustrated Part P.A.R. = Paint as Required

« RETURN TO GROUP INDEX

FRAME AND PAD REAR LONGITUDINAL SEAT CJ-7,8 WITH WORLD CAB
Figure 46-1800

81J 046 1800

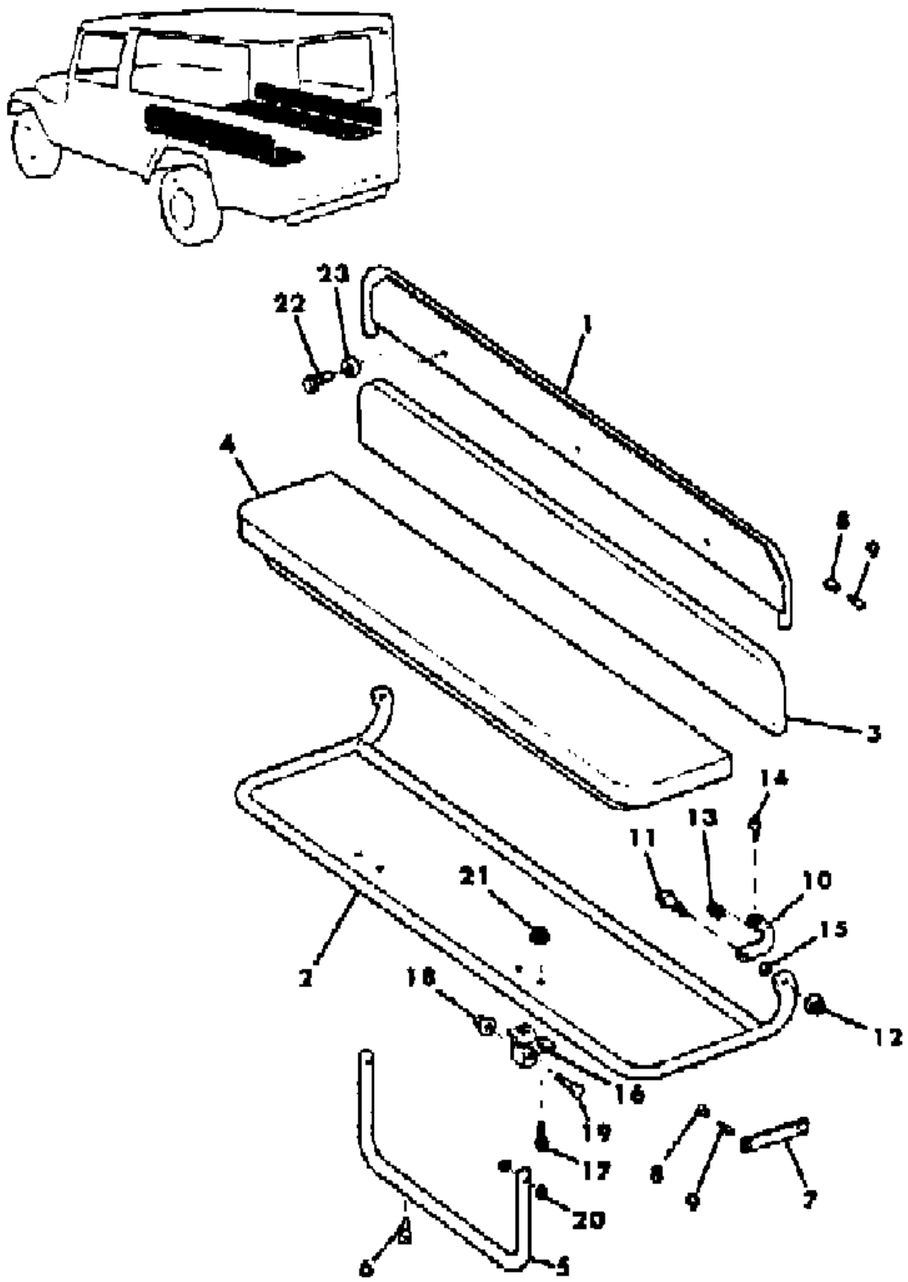

ITEM	PART NUMBER	QTY	BODY	MODEL	DESCRIPTION
1					FRAME, Back
	J805 2285	2		87	
	J805 2284	2		88	
2					FRAME, Cushion
	J805 2277	2		87	
	J805 2276	2		88	
3					PAD, Back
	J805 2427	2		87	
	J805 2428	2		88	
4					Pad, Cushion ***
	J805 3146	2		87	
	J805 3145	2		88	
5					SUPPORT, Rear Seat
	J805 2420	2		87	
	J805 2421	2		88	
6	J096 8072	4			PLUG
7					STRAP
	9500 0395	4			Black
8	J812 3724	12			STUD
9	S941 8448	12			SCREW
10					BRACKET
	J805 2415	2			Right
	J805 2416	2			Left
11	J400 5655	4			SCREW
12	J400 3062	4			NUT
13	J096 8155	4			PLATE, Tapping
14	J805 2564	4			SCREW
15	J400 6601	8			WASHER
16	J575 8750	4			BRACKET, Pivot
17	J400 3915	8			SCREW
18	J400 3587	4			NUT
19	J400 6490	4			BOLT
20	J400 2086	8			WASHER
21	J027 1184	8			NUT
22	J400 4692	6			SCREW
23	J805 3256	6			SPACER

MODEL CODES

16=Cherokee 2 Dr.(1981-83)
17=Cherokee 2 Dr.(1981-83)
73=Cherokee 2WD-2 Dr.(1984-86)
74=Cherokee 2WD-4 Dr.(1984-86)
18=Cherokee 4 Dr.(1981-83)
77=Cherokee 4WD-2 Dr.(1984-86)
78=Cherokee 4WD-4 Dr.(1984-86)
85=CJ-5 (1981-83)
86=CJ-6(1981)
87=CJ-7(1981-86)
88=CJ-8, Scrambler(1981-86)
64=Comanche 2WD-6 Ft. Box(1986)
66=Comanche 2WD-7 Ft. Box(1986)
63=Comanche 4WD-6 Ft. Box(1986)
65=Comanche 4WD-7 Ft. Box(1986)
15=Grand Wagoneer 4 Dr.(1984-86)
25=J-10 Truck 7 Ft. Box(1981-84)
26=J10 Truck 8 Ft. Box(1981-86)
27=J-20 Truck 8 Ft. Box(1981-86)
15=Wagoneer 4 Dr.(1981-83)
75=Wagoneer 4WD-4 Dr.(1984-86)

BODY
CJ=CJ-5, CJ-6, CJ-7, CJ-8, Scrambler(1981-86)
MJ=Comanche Pickup(1986)

STYLES
SJ=Wagoneer(1981-83), Grand Wagoneer(1984-86), Cherokee(1981-83), J-10, J-20(1981-86)
XJ=Wagoneer(1984-86), Cherokee(1984-86)

AR = Use as Required - = Non Illustrated Part P.A.R. = Paint as Required

« RETURN TO GROUP INDEX

COVERS, REAR SEAT UPHOSTERY WITH FIXED REAR SEAT CJ-5,6,7,8, SCRAMBLER
Figure 46-1900

81J 046 1900

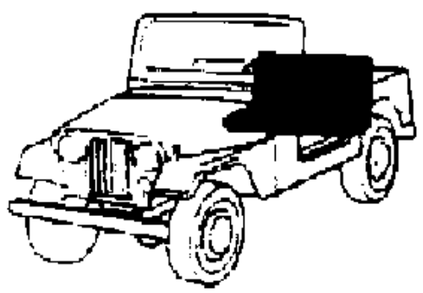

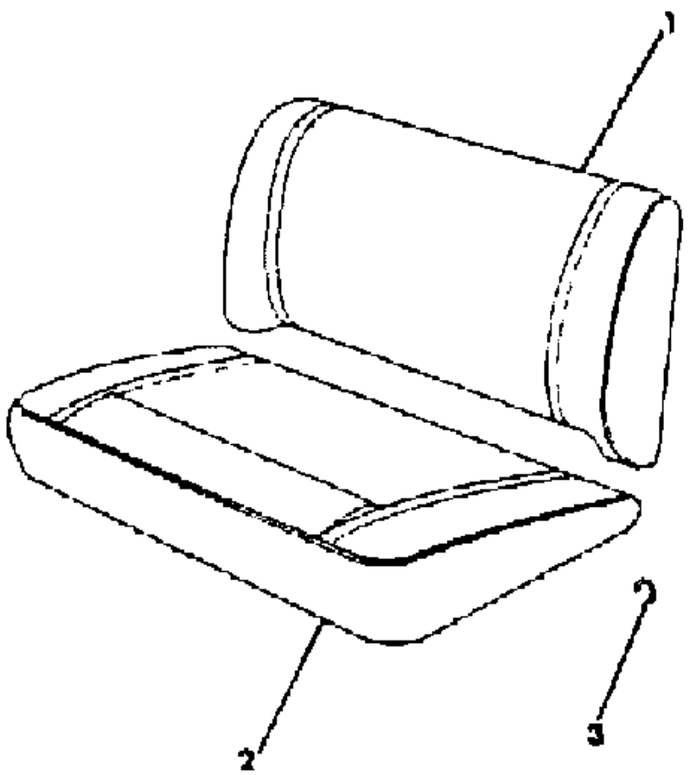

ITEM	PART NUMBER	QTY	BODY	MODEL	DESCRIPTION
1					COVER, Back
	J575 3348	1			Coded "1BA", 1981-82
	J576 2955	1			Coded "1BA", 1983
	J576 5181	1			Coded "1BA"or"1EA", 1984
	5500 9460	1			Coded "1BA", 1986
	J575 5674	1			Coded "1EB", 1981-82
	J576 2076	1			Coded "1EB", 1983
	J576 5178	1			Coded "1EB", 1984-85
	5500 9960	1			Coded "1EB", 1986
	5500 9551	1			Coded "1EE", 1985
	J575 7629	1			Coded "1EJ", 1981-82
	J576 2055	1			Coded "1EJ", 1983
	J576 5176	1			Coded "1EJ", 1984-85
	5500 9469	1			Coded "1EJ", 1986
	J576 3064	1			Coded "1EN", 1982
	J575 4009	1			Coded "1FA", 1981-82
	J576 2957	1			Coded "1FA", 1983
	J576 5183	1			Coded "1FA", 1984-85
	5500 9461	1			Coded "1FA", 1986
	J575 5676	1			Coded "3EB", 1981
	J576 0679	1			Coded "3EB", 1982
	J576 2077	1			Coded "3EB", 1983
	J576 0817	1			Coded "3EE", 1982
	J576 2057	1			Coded "3EE", 1983
	J576 5180	1			Coded "4EB", 1984-85
	5500 9961	1			Coded "4EB", 1986
	J575 5182	1			Coded "5EB", 1981-82
	J576 2078	1			Coded "5EB", 1983
	J576 5179	1			Coded "5EB", 1984
	J576 0818	1			Coded "5EE", 1982
	J576 2058	1			Coded "5EE", 1983
	J575 5184	1			Coded "5EJ", 1981-82
	J576 2056	1			Coded "5EJ", 1983
	J576 5177	1			Coded "5EJ", 1984
	J576 0820	1			Coded "5EL", 1982
	J576 2961	1			Coded "5EL", 1983
	J575 5178	1			Coded "6BA", 1981-82
	J576 2956	1			Coded "6BA", 1983
	J576 5182	1			Coded "6BA"or"6EA", 1984-85

MODEL CODES
16=Cherokee 2 Dr.(1981-83)
17=Cherokee 2 Dr.(1981-83)
73=Cherokee 2WD-2 Dr.(1984-86)
74=Cherokee 2WD-4 Dr.(1984-86)
18=Cherokee 4 Dr.(1981-83)
77=Cherokee 4WD-2 Dr.(1984-86)
78=Cherokee 4WD-4 Dr.(1984-86)
85=CJ-5 (1981-83)
86=CJ-6(1981)
87=CJ-7(1981-86)
88=CJ-8, Scrambler(1981-86)
64=Comanche 2WD-6 Ft. Box(1986)
66=Comanche 2WD-7 Ft. Box(1986)
63=Comanche 4WD-6 Ft. Box(1986)
65=Comanche 4WD-7 Ft. Box(1986)
15=Grand Wagoneer 4 Dr.(1984-86)
25=J-10 Truck 7 Ft. Box(1981-84)
26=J10 Truck 8 Ft. Box(1981-86)
27=J-20 Truck 8 Ft. Box(1981-86)
15=Wagoneer 4 Dr.(1981-83)
75=Wagoneer 4WD-4 Dr.(1984-86)

BODY
CJ=CJ-5, CJ-6, CJ-7, CJ-8, Scrambler(1981-86)
MJ=Comanche Pickup(1986)

STYLES
SJ=Wagoneer(1981-83), Grand Wagoneer(1984-86), Cherokee(1981-83), J-10, J-20(1981-86)
XJ=Wagoneer(1984-86), Cherokee(1984-86)

AR = Use as Required - = Non Illustrated Part P.A.R. = Paint as Required

COVERS, REAR SEAT UPHOSTERY WITH FIXED REAR SEAT CJ-5,6,7,8, SCRAMBLER
Figure 46-1900

81J 046 1900

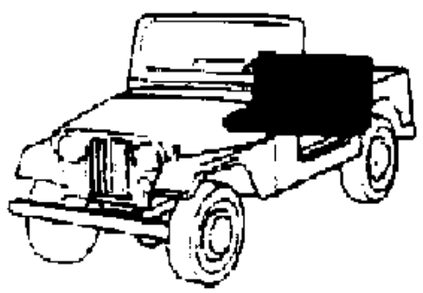

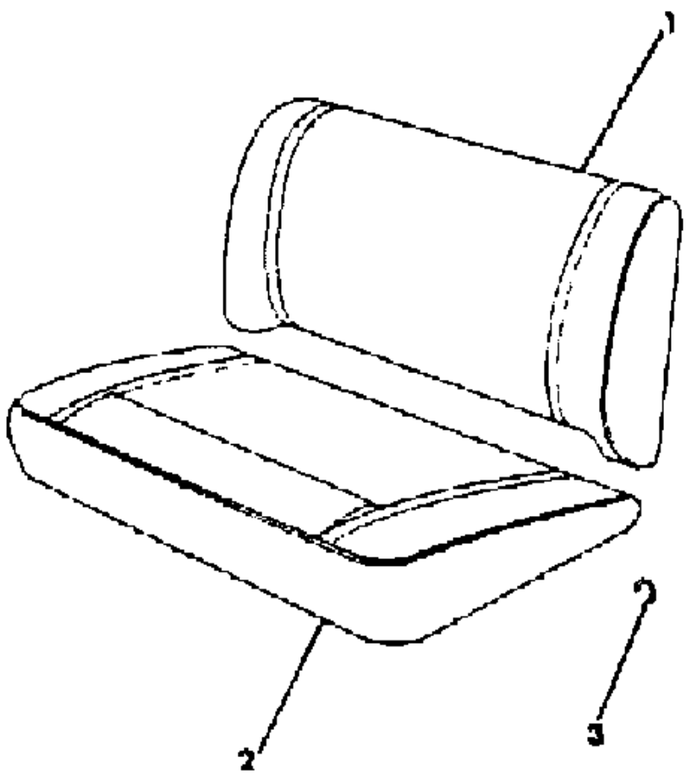

ITEM	PART NUMBER	QTY	BODY	MODEL	DESCRIPTION
	J575 5180	1			Coded "6FA", 1981-82
	J576 2958	1			Coded "6FA", 1983
	J576 5184	1			Coded "6FA", 1984-85
	5501 3436	1			Coded "9BA", 1986
	5500 9052	1			Coded "9EB", 1985
	5500 9962	1			Coded "9EB", 1986
	5500 9053	1			Coded "9EJ", 1985
	5500 9470	1			Coded "9EJ", 1986
	5501 3437	1			Coded "9FA", 1986
2					COVER, Cushion
	J575 3344	1			Coded "1BA", 1981-82
	J576 2951	1			Coded "1BA", 1983
	J576 4479	1			Coded "1BA", 1984
	J576 4479	1			Coded "1EA", 1985
	J575 5673	1			Coded "1EB", 1981-82
	J576 2073	1			Coded "1EB", 1983-85
	5500 9963	1			Coded "1EB", 1986
	5500 9550	1			Coded "1EE", 1985
	J575 7628	1			Coded "1EJ", 1981-82
	J576 2051	1			Coded "1EJ", 1983
	J576 4482	1			Coded "1EJ", 1984-85
	5500 9456	1			Coded "1EJ", 1986
	J576 3063	1			Coded "1EN", 1982
	J575 4007	1			Coded "1FA", 1981-82
	J576 2953	1			Coded "1FA", 1983
	J576 4480	1			Coded "1FA", 1984-85
	J575 5675	1			Coded "3EB", 1981
	J576 0678	1			Coded "3EB", 1982
	J576 2074	1			Coded "3EB", 1983
	J576 0813	1			Coded "3EE", 1982
	J576 2053	1			Coded "3EE", 1983
	J576 4481	1			Coded "4EB", 1984-85
	5500 9964	1			Coded "4EB", 1986
	J575 5181	1			Coded "5EB", 1981-82
	J576 2075	1			Coded "5EB", 1983-84
	J576 0814	1			Coded "5EE", 1982
	J576 2054	1			Coded "5EE", 1983
	J575 5183	1			Coded "5EJ", 1981-82
	J576 2052	1			Coded "5EJ", 1983-84

MODEL CODES

16=Cherokee 2 Dr.(1981-83)	78=Cherokee 4WD-4 Dr.(1984-86)	64=Comanche 2WD-6 Ft. Box(1986)	25=J-10 Truck 7 Ft. Box(1981-84)
17=Cherokee 2 Dr.(1981-83)	85=CJ-5 (1981-83)	66=Comanche 2WD-7 Ft. Box(1986)	26=J10 Truck 8 Ft. Box(1981-86)
73=Cherokee 2WD-2 Dr.(1984-86)	86=CJ-6(1981)	63=Comanche 4WD-6 Ft. Box(1986)	27=J-20 Truck 8 Ft. Box(1981-86)
74=Cherokee 2WD-4 Dr.(1984-86)	87=CJ-7(1981-86)	65=Comanche 4WD-7 Ft. Box(1986)	15=Wagoneer 4 Dr.(1981-83)
18=Cherokee 4 Dr.(1981-83)	88=CJ-8, Scrambler(1981-86)	15=Grand Wagoneer 4 Dr.(1984-86)	75=Wagoneer 4WD-4 Dr.(1984-86)
77=Cherokee 4WD-2 Dr.(1984-86)			

BODY
CJ=CJ-5, CJ-6, CJ-7, CJ-8, Scrambler(1981-86)
MJ=Comanche Pickup(1986)

STYLES
SJ=Wagoneer(1981-83), Grand Wagoneer(1984-86), Cherokee(1981-83), J-10, J-20(1981-86)
XJ=Wagoneer(1984-86), Cherokee(1984-86)

AR = Use as Required - = Non Illustrated Part P.A.R. = Paint as Required

COVERS, REAR SEAT UPHOSTERY WITH FIXED REAR SEAT CJ-5,6,7,8, SCRAMBLER
Figure 46-1900

81J 046 1900

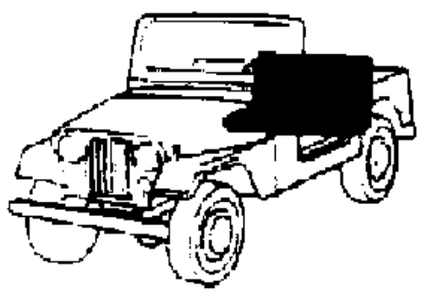

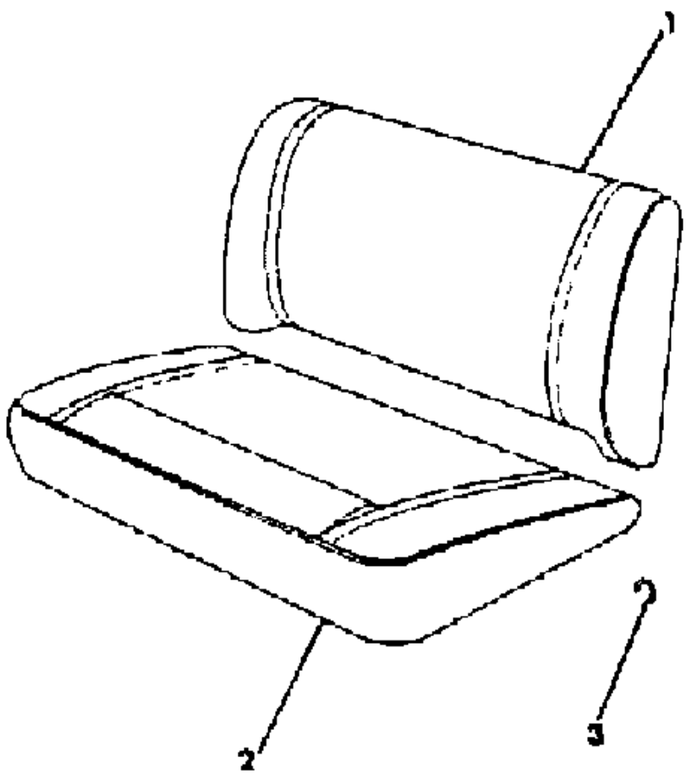

ITEM	PART NUMBER	QTY	BODY	MODEL	DESCRIPTION
	J576 0816	1			Coded "5EL", 1982
	J576 2960	1			Coded "5EL", 1983
	J575 5177	1			Coded "6BA", 1981-82
	J576 2952	1			Coded "6BA", 1983
	J576 4477	1			Coded "6BA"or"6EA", 1984-85
	J575 5179	1			Coded "6FA", 1981-82
	J576 2954	1			Coded "6FA", 1983
	J576 4478	1			Coded "6FA", 1984-85
	5501 3434	1			Coded "9BA", 1986
	5500 9050	1			Coded "9EB", 1985
	5500 9965	1			Coded "9EB", 1986
	5500 9051	1			Coded "9EJ", 1985
	5500 9457	1			Coded "9EJ", 1986
	5501 3435	1			Coded "9FA", 1986
3					RING
	J400 0251	AR			.50"
	J436 3256	AR			.75"

MODEL CODES

16=Cherokee 2 Dr.(1981-83)	78=Cherokee 4WD-4 Dr.(1984-86)	64=Comanche 2WD-6 Ft. Box(1986)	25=J-10 Truck 7 Ft. Box(1981-84)
17=Cherokee 2 Dr.(1981-83)	85=CJ-5 (1981-83)	66=Comanche 2WD-7 Ft. Box(1986)	26=J10 Truck 8 Ft. Box(1981-86)
73=Cherokee 2WD-2 Dr.(1984-86)	86=CJ-6(1981)	63=Comanche 4WD-6 Ft. Box(1986)	27=J-20 Truck 8 Ft. Box(1981-86)
74=Cherokee 2WD-4 Dr.(1984-86)	87=CJ-7(1981-86)	65=Comanche 4WD-7 Ft. Box(1986)	15=Wagoneer 4 Dr.(1981-83)
18=Cherokee 4 Dr.(1981-83)	88=CJ-8, Scrambler(1981-86)	15=Grand Wagoneer 4 Dr.(1984-86)	75=Wagoneer 4WD-4 Dr.(1984-86)
77=Cherokee 4WD-2 Dr.(1984-86)			

BODY
CJ=CJ-5, CJ-6, CJ-7, CJ-8, Scrambler(1981-86)
MJ=Comanche Pickup(1986)

STYLES
SJ=Wagoneer(1981-83), Grand Wagoneer(1984-86), Cherokee(1981-83), J-10, J-20(1981-86)
XJ=Wagoneer(1984-86), Cherokee(1984-86)

AR = Use as Required - = Non Illustrated Part P.A.R. = Paint as Required

COVERS, REAR SEAT UPHOLSTERY WITH FOLD AND TUMBLE SEAT CJ-5,6,7,8, SCRAMBLER
Figure 46-2000

81J 046 2000

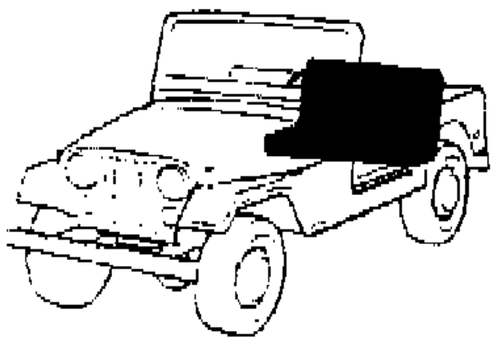

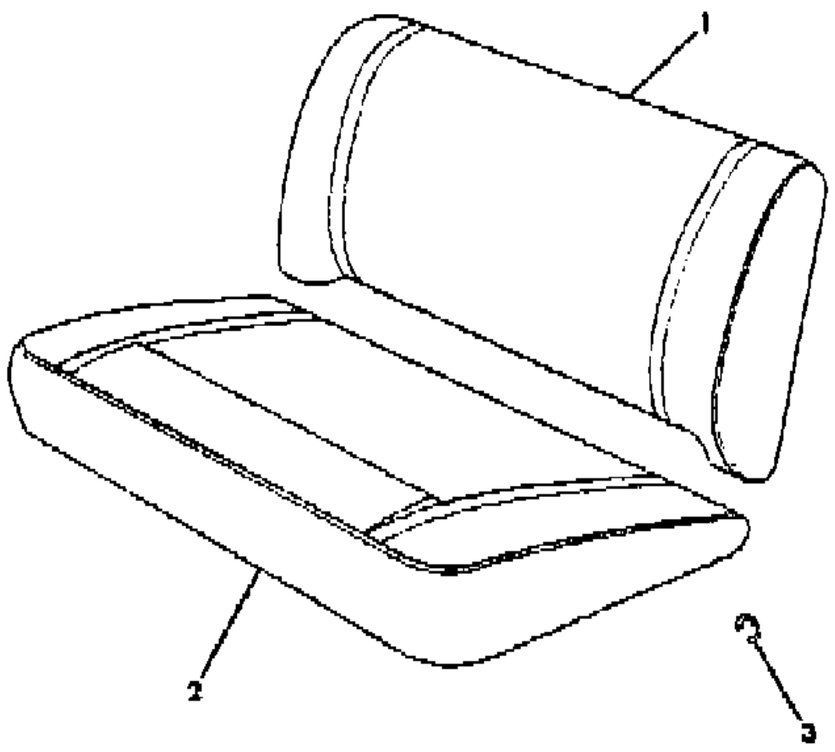

ITEM	PART NUMBER	QTY	BODY	MODEL	DESCRIPTION
1					COVER, Back
	J576 6335	1			Coded "51EA", 1985
	J576 6340	1			Coded "51EB", 1985
	J576 6341	1			Coded "51EJ", 1985
	J576 6336	1			Coded "51FA", 1985
	J576 6338	1			Coded "54EB", 1985
	J576 6333	1			Coded "56EA", 1985
	J576 6334	1			Coded "56FA", 1985
	J576 6339	1			Coded "59EB", 1985
	J576 6342	1			Coded "59EJ", 1985
2					COVER, Cushion
	J576 6322	1			Coded "51EA", 1985-86
	J576 6326	1			Coded "51EB", 1985
	J576 6328	1			Coded "51EJ", 1985
	J576 6323	1			Coded "51FA", 1985-86
	J576 6325	1			Coded "54EB", 1985
	J576 6320	1			Coded "56EA", 1985
	J576 6321	1			Coded "56FA", 1985
	J576 6327	1			Coded "59EB", 1985
	J576 6329	1			Coded "59EJ", 1985
3					RING
	J436 3256	AR			.75"

MODEL CODES

16=Cherokee 2 Dr.(1981-83)	78=Cherokee 4WD-4 Dr.(1984-86)	64=Comanche 2WD-6 Ft. Box(1986)	25=J-10 Truck 7 Ft. Box(1981-84)
17=Cherokee 2 Dr.(1981-83)	85=CJ-5 (1981-83)	66=Comanche 2WD-7 Ft. Box(1986)	26=J10 Truck 8 Ft. Box(1981-86)
73=Cherokee 2WD-2 Dr.(1984-86)	86=CJ-6(1981)	63=Comanche 4WD-6 Ft. Box(1986)	27=J-20 Truck 8 Ft. Box(1981-86)
74=Cherokee 2WD-4 Dr.(1984-86)	87=CJ-7(1981-86)	65=Comanche 4WD-7 Ft. Box(1986)	15=Wagoneer 4 Dr.(1981-83)
18=Cherokee 4 Dr.(1981-83)	88=CJ-8, Scrambler(1981-86)	15=Grand Wagoneer 4 Dr.(1984-86)	75=Wagoneer 4WD-4 Dr.(1984-86)
77=Cherokee 4WD-2 Dr.(1984-86)			

BODY
CJ=CJ-5, CJ-6, CJ-7, CJ-8, Scrambler(1981-86)
MJ=Comanche Pickup(1986)

STYLES
SJ=Wagoneer(1981-83), Grand Wagoneer(1984-86), Cherokee(1981-83), J-10, J-20(1981-86)
XJ=Wagoneer(1984-86), Cherokee(1984-86)

AR = Use as Required - = Non Illustrated Part P.A.R. = Paint as Required

« RETURN TO GROUP INDEX

COVERS, REAR SEAT UPHOLSTERY WITH LONGITUDINAL SEAT, EXPORT CJ-5,6,7,8
Figure 46-2100

81J 046 2100

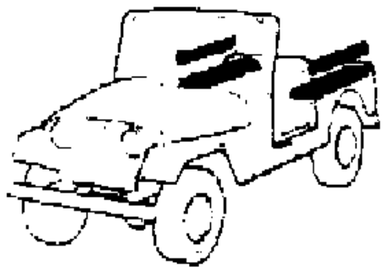

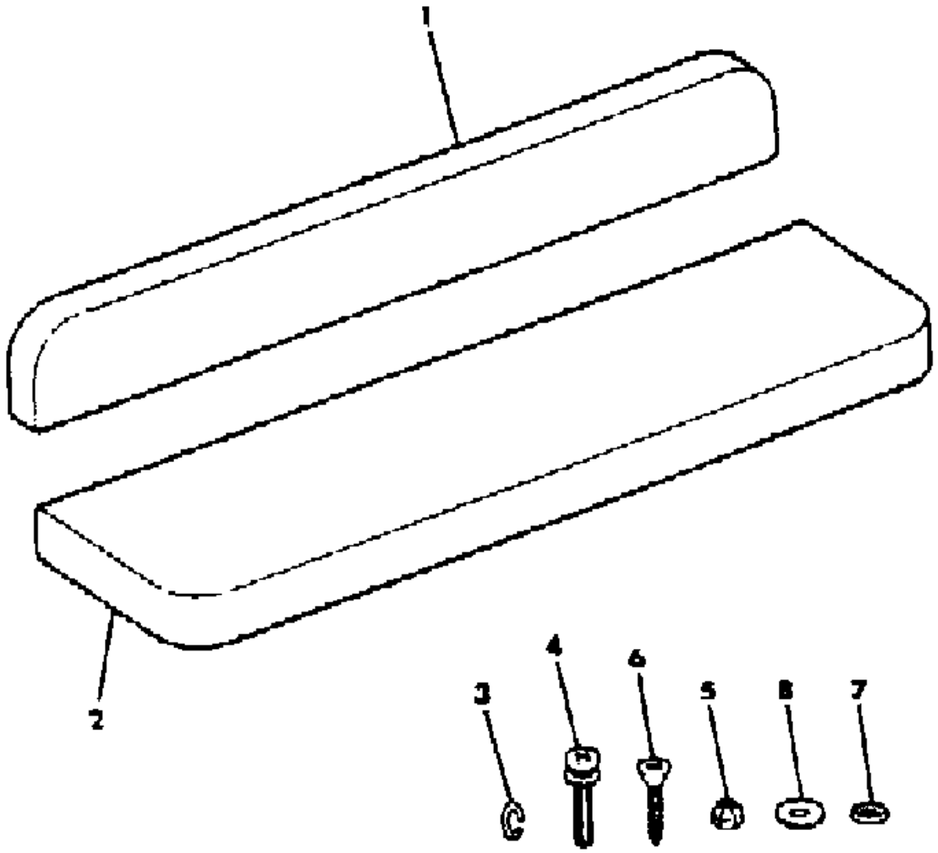

ITEM	PART NUMBER	QTY	BODY	MODEL	DESCRIPTION
1					COVER, Back
	J805 3363	2		87	Almond, with World Cab
	J805 3365	2		88	Almond, with World Cab
	J575 5121	2		85	Beige
	J575 5123	2		86	Beige
	J576 0263	2		88	Beige
	J805 3299	2		87	Beige, with World Cab
	J805 3293	2		88	Beige, with World Cab
	J575 4118	2		85	Black
	J575 4122	2		86	Black
	J576 0262	2		88	Black, 1981-83
	J576 5195	2		88	Black, 1984
	J805 3297	2		87	Black, with World Cab, 1982-83
	9500 0010	2		87	Black, with World Cab, 1984
	J805 3291	2		88	Black, with World Cab, 1982-83
	9500 0011	2		88	Black, with World Cab, 1984
	9500 0441	2		87	Honey, with World Cab
	9500 0443	2		88	Honey, with World Cab
	J805 3301	2		87	Nutmeg, with World Cab
	J805 3295	2		88	Nutmeg, with World Cab
2					COVER, Cushion
	J805 3362	2		87	Almond, with World Cab
	J805 3364	2		88	Almond, with World Cab
	J575 5120	2		85	Beige
	J575 5122	2		86	Beige
	J576 0261	2		88	Beige
	J805 3300	2		87	Beige, with World Cab
	J805 3294	2		88	Beige, with World Cab
	J575 4116	2		85	Black
	J575 4120	2		86	Black
	J576 0260	2		88	Black, 1981-83
	J576 5196	2		88	Black, 1984
	J805 3298	2		87	Black, with World Cab, 1982-83
	9500 0009	2		87	Black, with World Cab, 1984
	J805 3292	2		88	Black, with World Cab, 1982-83
	9500 0012	2		88	Black, with World Cab, 1984
	9500 0442	2		87	Honey, with World Cab
	9500 0444	2		88	Honey, with World Cab
	J805 3302	2		87	Nutmeg, with World Cab

MODEL CODES
16=Cherokee 2 Dr.(1981-83)
17=Cherokee 2 Dr.(1981-83)
73=Cherokee 2WD-2 Dr.(1984-86)
74=Cherokee 2WD-4 Dr.(1984-86)
18=Cherokee 4 Dr.(1981-83)
77=Cherokee 4WD-2 Dr.(1984-86)
78=Cherokee 4WD-4 Dr.(1984-86)
85=CJ-5 (1981-83)
86=CJ-6(1981)
87=CJ-7(1981-86)
88=CJ-8, Scrambler(1981-86)
64=Comanche 2WD-6 Ft. Box(1986)
66=Comanche 2WD-7 Ft. Box(1986)
63=Comanche 4WD-6 Ft. Box(1986)
65=Comanche 4WD-7 Ft. Box(1986)
15=Grand Wagoneer 4 Dr.(1984-86)
25=J-10 Truck 7 Ft. Box(1981-84)
26=J10 Truck 8 Ft. Box(1981-86)
27=J-20 Truck 8 Ft. Box(1981-86)
15=Wagoneer 4 Dr.(1981-83)
75=Wagoneer 4WD-4 Dr.(1984-86)

BODY
CJ=CJ-5, CJ-6, CJ-7, CJ-8, Scrambler(1981-86)
MJ=Comanche Pickup(1986)

STYLES
SJ=Wagoneer(1981-83), Grand Wagoneer(1984-86), Cherokee(1981-83), J-10, J-20(1981-86)
XJ=Wagoneer(1984-86), Cherokee(1984-86)

AR = Use as Required - = Non Illustrated Part P.A.R. = Paint as Required

COVERS, REAR SEAT UPHOLSTERY WITH LONGITUDINAL SEAT, EXPORT CJ-5,6,7,8
Figure 46-2100

81J 046 2100

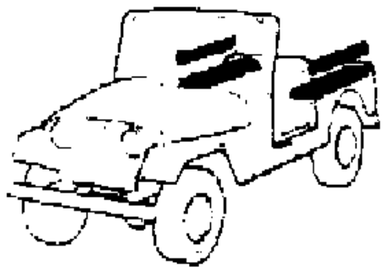

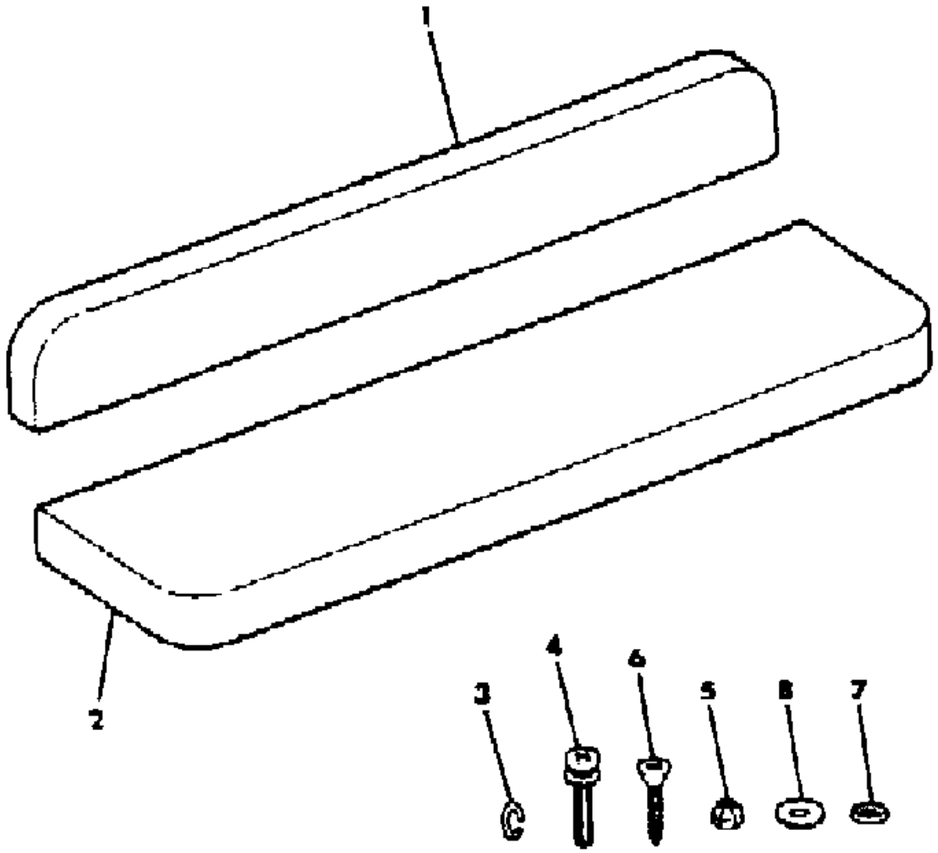

ITEM	PART NUMBER	QTY	BODY	MODEL	DESCRIPTION
	J805 3296	2		88	Nutmeg, with World Cab
3					RING
	J400 0251	AR			.50"
	J436 3256	AR			.75"
4	J045 4783	AR			SCREW
5	J999 7797	AR			NUT
6	S016 2457	AR			SCREW
7	J999 8458	AR			WASHER
8	S012 0385	AR			WASHER

MODEL CODES

16=Cherokee 2 Dr.(1981-83)	78=Cherokee 4WD-4 Dr.(1984-86)	64=Comanche 2WD-6 Ft. Box(1986)	25=J-10 Truck 7 Ft. Box(1981-84)
17=Cherokee 2 Dr.(1981-83)	85=CJ-5 (1981-83)	66=Comanche 2WD-7 Ft. Box(1986)	26=J10 Truck 8 Ft. Box(1981-86)
73=Cherokee 2WD-2 Dr.(1984-86)	86=CJ-6(1981)	63=Comanche 4WD-6 Ft. Box(1986)	27=J-20 Truck 8 Ft. Box(1981-86)
74=Cherokee 2WD-4 Dr.(1984-86)	87=CJ-7(1981-86)	65=Comanche 4WD-7 Ft. Box(1986)	15=Wagoneer 4 Dr.(1981-83)
18=Cherokee 4 Dr.(1981-83)	88=CJ-8, Scrambler(1981-86)	15=Grand Wagoneer 4 Dr.(1984-86)	75=Wagoneer 4WD-4 Dr.(1984-86)
77=Cherokee 4WD-2 Dr.(1984-86)			

BODY
CJ=CJ-5, CJ-6, CJ-7, CJ-8, Scrambler(1981-86)
MJ=Comanche Pickup(1986)

STYLES
SJ=Wagoneer(1981-83), Grand Wagoneer(1984-86), Cherokee(1981-83), J-10, J-20(1981-86)
XJ=Wagoneer(1984-86), Cherokee(1984-86)

AR = Use as Required - = Non Illustrated Part P.A.R. = Paint as Required

« RETURN TO GROUP INDEX

TRACKS FRONT BUCKET SEAT CJ-5,6,7,8, SCRAMBLER
Figure 46-2200

81J 046 2200

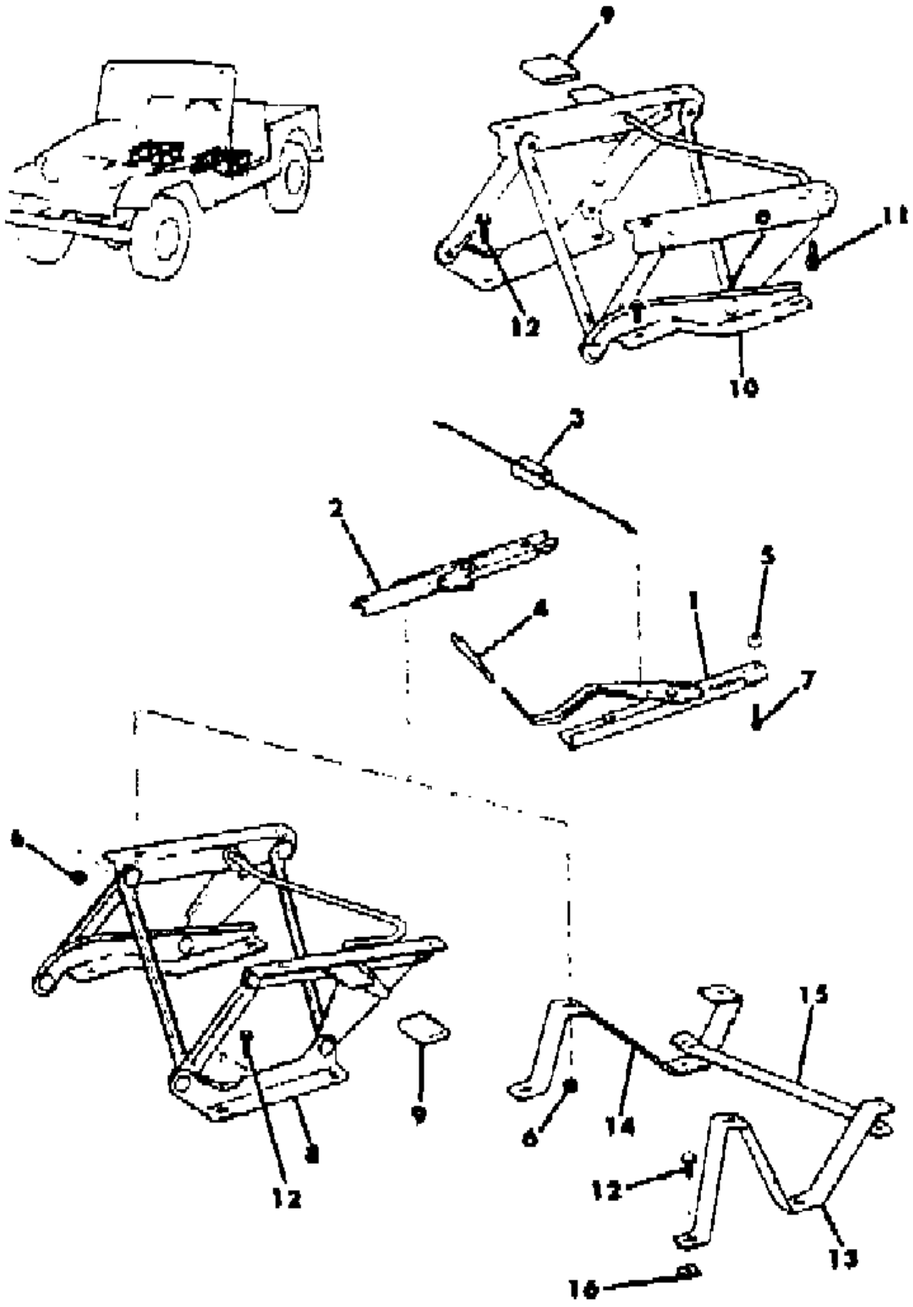

ITEM	PART NUMBER	QTY	BODY	MODEL	DESCRIPTION
1	J546 1247	1			TRACK, Seat
2					TRACK, Seat
	J098 7422	1			Without Locking Latch
	J098 7421	1			With Locking Latch
3	J545 7703	1			WIRE, Seat Adjuster
4	J546 1281	1			HANDLE, Adjusting
5	J545 5277	4			SPACER
6	J812 2425	4			NUT
7	J400 4926	4			SCREW
8					SUPPORT, Cushion
	J575 8537	1			1981-85
	5501 1041	1			1986
9	J545 8945	2			PROTECTOR
10					SUPPORT, Cushion
	J575 8501	1			1981-85: Left Hand Drive
	5501 1038	1			1986: Left Hand Drive
	J575 4501	1		85,86	1981: EXPORT, Right Hand Drive
	J575 4501	1			1982-86: EXPORT, Right Hand Drive, with Low Back Seat
	J575 4501	1		85	1982-83: EXPORT, Right Hand Drive, with High Back Seat
	J575 8537	1		87,88	1981: EXPORT, Right Hand Drive
	J575 8537	1		87,88	1982-85: EXPORT, Right Hand Drive, with High Back Seat
	5501 1041	1		87,88	1986: EXPORT, Right Hand Drive, with High Back Seat
11	J400 4455	4			SCREW
12					BOLT
	J400 5354	8			7/8"
	J545 0077	8			1 1/4"
13					SUPPORT, Cushion
	J545 3866	1			1981" Left Hand Drive
	J545 3866	1			1982-85: Left Hand Drive, with Low Back Seat
	J545 3866	1			1982-86: Left Hand Drive, with High Back Seat
	J575 1671	1			EXPORT, Right Hand Drive
14					SUPPORT, Cushion
	J545 3865	1			1981: Left Hand Drive
	J545 3865	1			1982-85: Left Hand Drive, with Low Back Seat
	J545 3865	1			1982-86: Left Hand Drive, with High Back Seat
	J575 1670	1			EXPORT, Right Hand Drive
15					BRACE
	J546 1859	1			Left Hand Drive
	J575 1747	1			EXPORT, Right Hand Drive

MODEL CODES

16=Cherokee 2 Dr.(1981-83)	78=Cherokee 4WD-4 Dr.(1984-86)	64=Comanche 2WD-6 Ft. Box(1986)	25=J-10 Truck 7 Ft. Box(1981-84)
17=Cherokee 2 Dr.(1981-83)	85=CJ-5 (1981-83)	66=Comanche 2WD-7 Ft. Box(1986)	26=J10 Truck 8 Ft. Box(1981-86)
73=Cherokee 2WD-2 Dr.(1984-86)	86=CJ-6(1981)	63=Comanche 4WD-6 Ft. Box(1986)	27=J-20 Truck 8 Ft. Box(1981-86)
74=Cherokee 2WD-4 Dr.(1984-86)	87=CJ-7(1981-86)	65=Comanche 4WD-7 Ft. Box(1986)	15=Wagoneer 4 Dr.(1981-83)
18=Cherokee 4 Dr.(1981-83)	88=CJ-8, Scrambler(1981-86)	15=Grand Wagoneer 4 Dr.(1984-86)	75=Wagoneer 4WD-4 Dr.(1984-86)
77=Cherokee 4WD-2 Dr.(1984-86)			

BODY
CJ=CJ-5, CJ-6, CJ-7, CJ-8, Scrambler(1981-86)
MJ=Comanche Pickup(1986)

STYLES
SJ=Wagoneer(1981-83), Grand Wagoneer(1984-86), Cherokee(1981-83), J-10, J-20(1981-86)
XJ=Wagoneer(1984-86), Cherokee(1984-86)

AR = Use as Required - = Non Illustrated Part P.A.R. = Paint as Required

« RETURN TO GROUP INDEX »

TRACKS FRONT BUCKET SEAT CJ-5,6,7,8, SCRAMBLER
Figure 46-2200

81J 046 2200

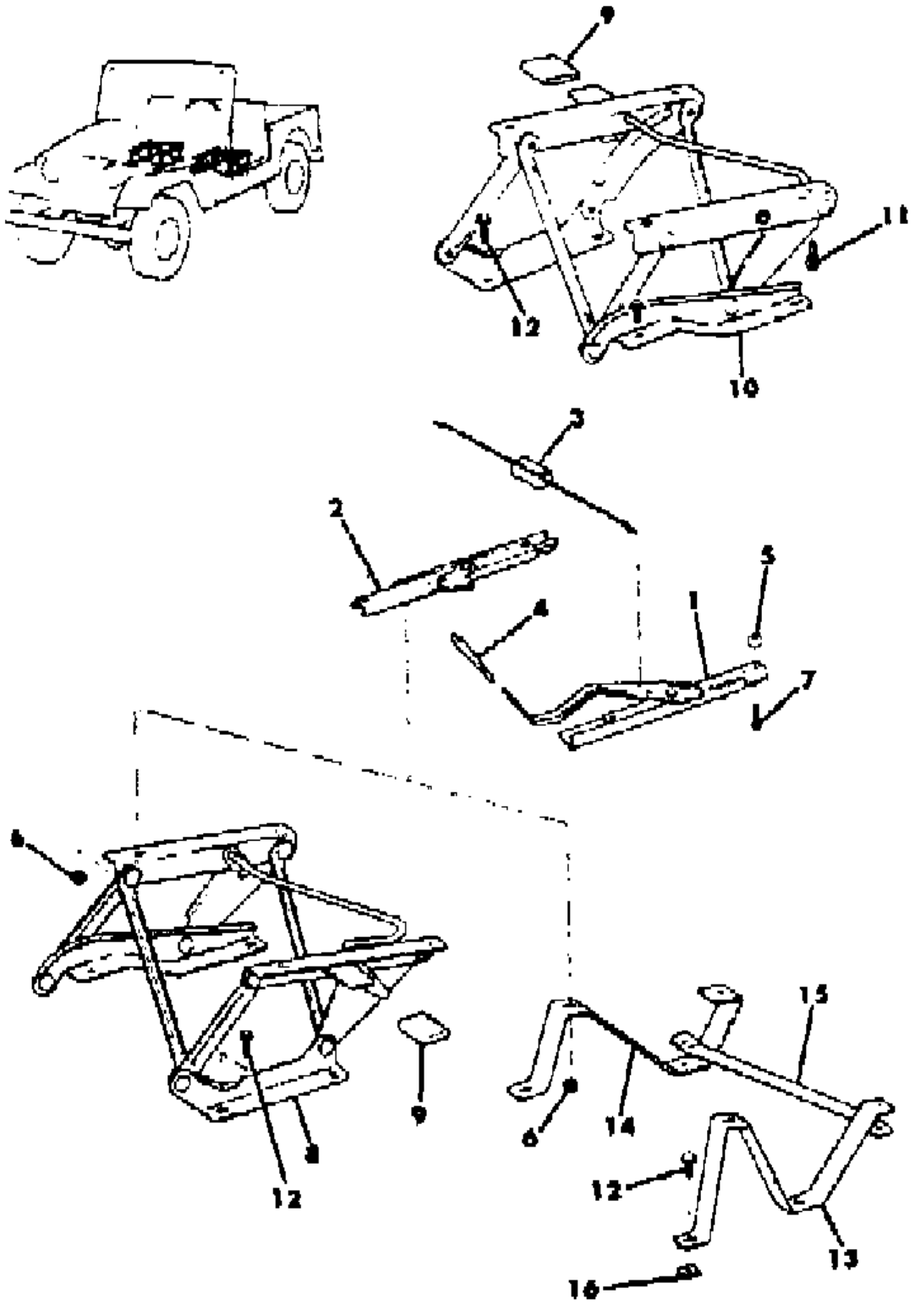

ITEM	PART NUMBER	QTY	BODY	MODEL	DESCRIPTION
16	J096 8155	2			PLATE, Tapping

MODEL CODES

16=Cherokee 2 Dr.(1981-83)	78=Cherokee 4WD-4 Dr.(1984-86)	64=Comanche 2WD-6 Ft. Box(1986)	25=J-10 Truck 7 Ft. Box(1981-84)
17=Cherokee 2 Dr.(1981-83)	85=CJ-5 (1981-83)	66=Comanche 2WD-7 Ft. Box(1986)	26=J10 Truck 8 Ft. Box(1981-86)
73=Cherokee 2WD-2 Dr.(1984-86)	86=CJ-6(1981)	63=Comanche 4WD-6 Ft. Box(1986)	27=J-20 Truck 8 Ft. Box(1981-86)
74=Cherokee 2WD-4 Dr.(1984-86)	87=CJ-7(1981-86)	65=Comanche 4WD-7 Ft. Box(1986)	15=Wagoneer 4 Dr.(1981-83)
18=Cherokee 4 Dr.(1981-83)	88=CJ-8, Scrambler(1981-86)	15=Grand Wagoneer 4 Dr.(1984-86)	75=Wagoneer 4WD-4 Dr.(1984-86)
77=Cherokee 4WD-2 Dr.(1984-86)			

BODY
CJ=CJ-5, CJ-6, CJ-7, CJ-8, Scrambler(1981-86)
MJ=Comanche Pickup(1986)

STYLES
SJ=Wagoneer(1981-83), Grand Wagoneer(1984-86), Cherokee(1981-83), J-10, J-20(1981-86)
XJ=Wagoneer(1984-86), Cherokee(1984-86)

AR = Use as Required - = Non Illustrated Part P.A.R. = Paint as Required

TRACKS FRONT 1/3-2/3 SEAT, EXPORT CJ-5,6,7,8
Figure 46-2300

81J 046 2300

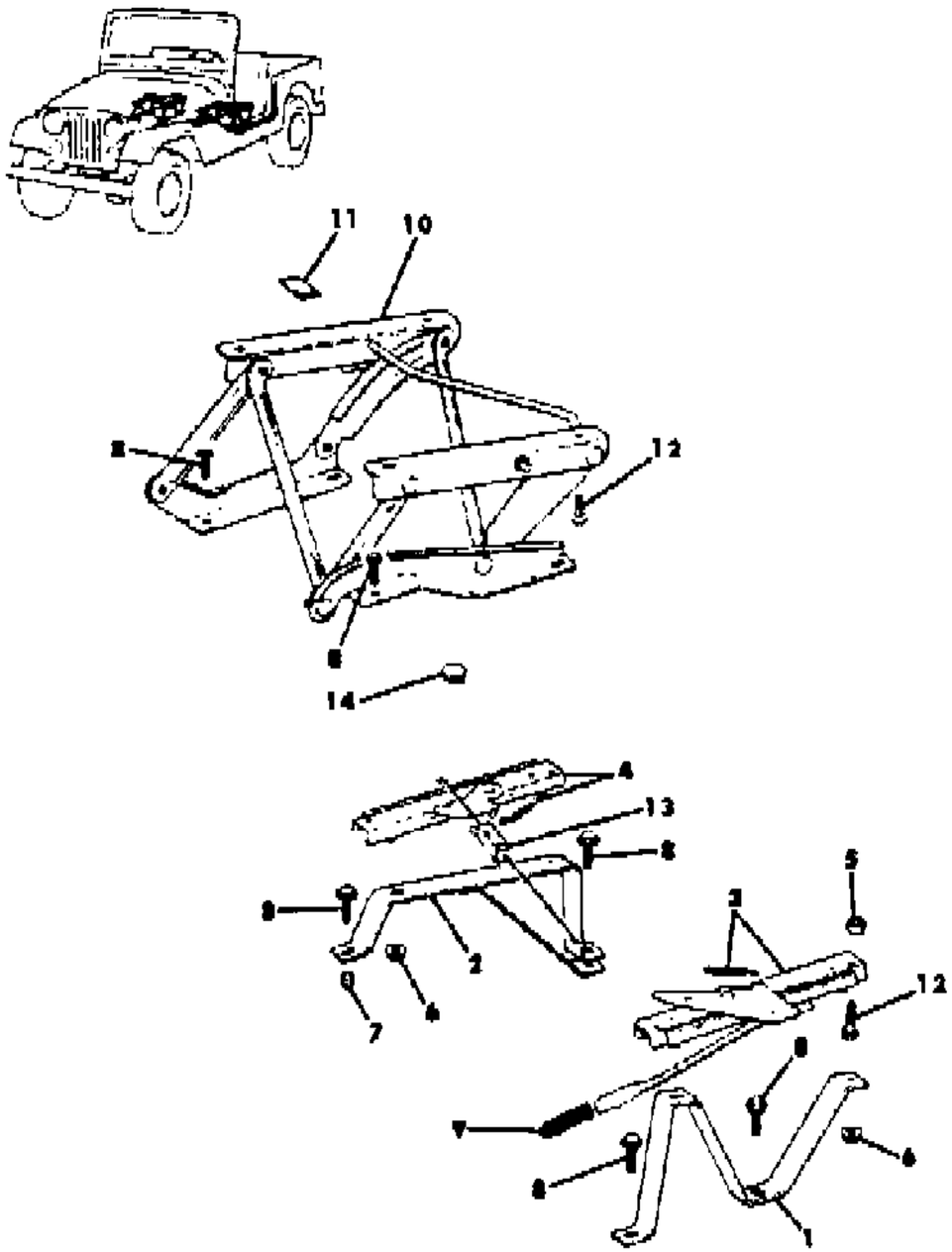

ITEM	PART NUMBER	QTY	BODY	MODEL	DESCRIPTION
1	J545 3866	1			SUPPORT, Cushion
2	J545 9267	1			SUPPORT, Cushion
3	J546 1247	1			TRACK, Seat
4	J098 7421	1			TRACK, Seat
5	J545 5277	4			SPACER
6	J812 2425	4			NUT
7	J400 5658	2			NUT, Push
8					BOLT
	J545 0077	7			1.25"
	J546 3620	AR			1.75"
9	J546 1281	1			HANDLE, Adjusting
10					SUPPORT, Cushion
	J575 8501	1			1981-85
	5501 1038	1			1986
11	J545 8945	1			PROTECTOR
12	J400 4926	4			SCREW
13	J545 9245	1			WIRE, Seat Adjuster
14	J400 4875	2			PLUG, P.A.R.

MODEL CODES

16=Cherokee 2 Dr.(1981-83)
17=Cherokee 2 Dr.(1981-83)
73=Cherokee 2WD-2 Dr.(1984-86)
74=Cherokee 2WD-4 Dr.(1984-86)
18=Cherokee 4 Dr.(1981-83)
77=Cherokee 4WD-2 Dr.(1984-86)
78=Cherokee 4WD-4 Dr.(1984-86)
85=CJ-5 (1981-83)
86=CJ-6(1981)
87=CJ-7(1981-86)
88=CJ-8, Scrambler(1981-86)
64=Comanche 2WD-6 Ft. Box(1986)
66=Comanche 2WD-7 Ft. Box(1986)
63=Comanche 4WD-6 Ft. Box(1986)
65=Comanche 4WD-7 Ft. Box(1986)
15=Grand Wagoneer 4 Dr.(1984-86)
25=J-10 Truck 7 Ft. Box(1981-84)
26=J10 Truck 8 Ft. Box(1981-86)
27=J-20 Truck 8 Ft. Box(1981-86)
15=Wagoneer 4 Dr.(1981-83)
75=Wagoneer 4WD-4 Dr.(1984-86)

BODY
CJ=CJ-5, CJ-6, CJ-7, CJ-8, Scrambler(1981-86)
MJ=Comanche Pickup(1986)

STYLES
SJ=Wagoneer(1981-83), Grand Wagoneer(1984-86), Cherokee(1981-83), J-10, J-20(1981-86)
XJ=Wagoneer(1984-86), Cherokee(1984-86)

AR = Use as Required - = Non Illustrated Part P.A.R. = Paint as Required

« RETURN TO GROUP INDEX

SEAT BELTS CJ-5,6,7,8, SCRAMBLER
Figure 46-2400

81J 046 2400

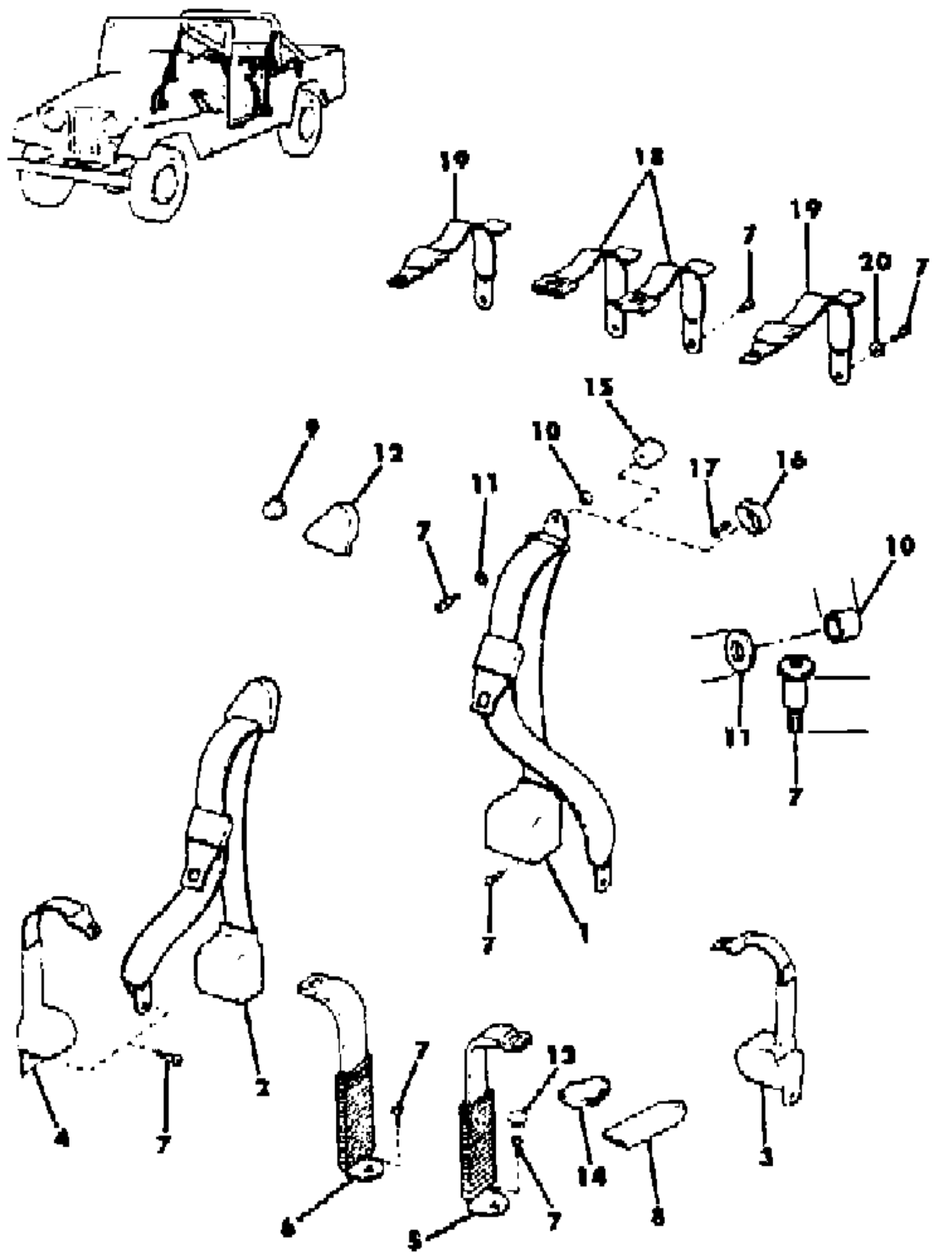

ITEM	PART NUMBER	QTY	BODY	MODEL	DESCRIPTION
1					SEATBELT ***
					Without EXPORT
	J576 0184	1		85	
	J576 0184	1		87	1981
	J576 2153	1		87,88	1982-84
	J576 5279	1		87,88	1985-86
					EXPORT
	J576 0078	1			Without Sport Bar
	J575 6583	1			With Sport Bar, with Spare Tire Mounted on Tailgate
	J576 2157	1			With Sport Bar, with Spare Tire Mounted on Sport Bar
	J576 2157	1			With World Cab
2					SEATBELT ***
					Without EXPORT
	J576 0184	1		85	
	J576 0184	1		87	1981
	J576 2154	1		87,88	1982-84
	J576 5278	1		87,88	1985-86
					EXPORT
	J576 0078	1			Without Sport Bar
	J575 6583	1			With Sport Bar, with Spare Tire Mounted on Tailgate
	J576 2158	1			With Sport Bar, with Spare Tire Mounted on Sport Bar
	J576 2158	1			With World Cab
3					SEATBELT ***
	J575 3309	1		85	
	J545 1911	1		87	
	J576 0185	1		88	
4					SEATBELT ***
	J575 3309	1		85	
	J545 1912	1		87	
	J576 0185	1		88	
5					SEATBELT ***
					Without EXPORT
	J545 9125	1			With Front Lap Type Seatbelts
	J575 5911	1			1981-84: With Front Shoulder and Lap Type Seatbelts
	J576 5283	1			1985-86
					EXPORT
	J576 0075	1			Without Sport Bar
	J576 0073	1			With Sport Bar
	J576 0073	1			With World Cab

MODEL CODES

16=Cherokee 2 Dr.(1981-83)	78=Cherokee 4WD-4 Dr.(1984-86)	64=Comanche 2WD-6 Ft. Box(1986)	25=J-10 Truck 7 Ft. Box(1981-84)
17=Cherokee 2 Dr.(1981-83)	85=CJ-5 (1981-83)	66=Comanche 2WD-7 Ft. Box(1986)	26=J10 Truck 8 Ft. Box(1981-86)
73=Cherokee 2WD-2 Dr.(1984-86)	86=CJ-6(1981)	63=Comanche 4WD-6 Ft. Box(1986)	27=J-20 Truck 8 Ft. Box(1981-86)
74=Cherokee 2WD-4 Dr.(1984-86)	87=CJ-7(1981-86)	65=Comanche 4WD-7 Ft. Box(1986)	15=Wagoneer 4 Dr.(1981-83)
18=Cherokee 4 Dr.(1981-83)	88=CJ-8, Scrambler(1981-86)	15=Grand Wagoneer 4 Dr.(1984-86)	75=Wagoneer 4WD-4 Dr.(1984-86)
77=Cherokee 4WD-2 Dr.(1984-86)			

BODY
CJ=CJ-5, CJ-6, CJ-7, CJ-8, Scrambler(1981-86)
MJ=Comanche Pickup(1986)

STYLES
SJ=Wagoneer(1981-83), Grand Wagoneer(1984-86), Cherokee(1981-83), J-10, J-20(1981-86)
XJ=Wagoneer(1984-86), Cherokee(1984-86)

AR = Use as Required - = Non Illustrated Part P.A.R. = Paint as Required

SEAT BELTS CJ-5,6,7,8, SCRAMBLER
Figure 46-2400

81J 046 2400

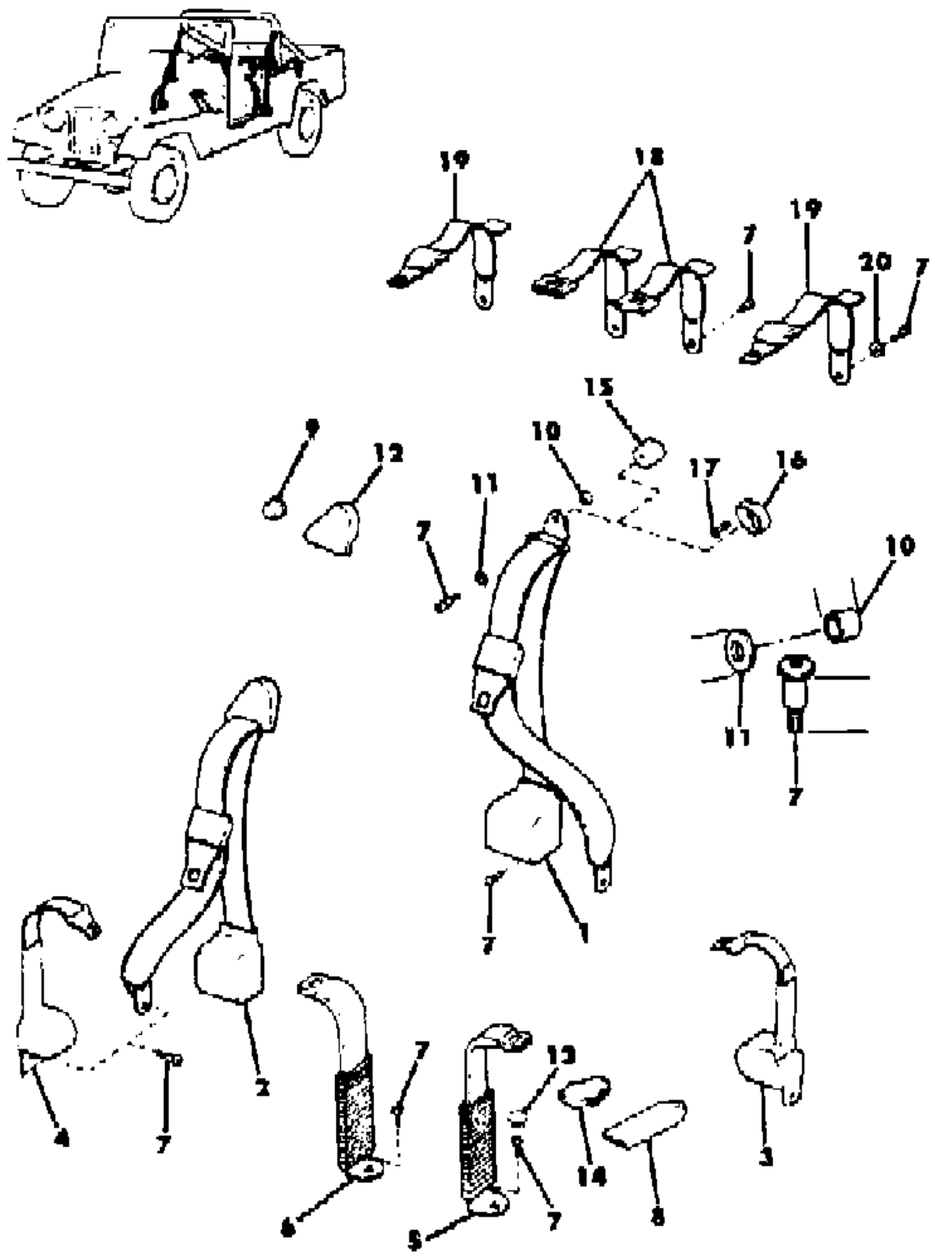

ITEM	PART NUMBER	QTY	BODY	MODEL	DESCRIPTION
6					SEATBELT ***
					Without EXPORT
	J545 9125	1			With Front Lap Type Seatbelts
	J575 5910	1			1981-84: With Front Shoulder and Lap Type Seatbelts
	J576 5282	1			1985-86
	J576 0075	1			Without Sport Bar
	J576 0072	1			With Sport Bar
	J576 0072	1			With World Cab
7					BOLT, Shoulder
	J400 5505	AR			1.328"
	J400 6832	4			1.375"
	J400 5506	AR			1.453"
	J400 6366	2			1.500"
	J400 5507	AR			1.875"
	J400 7124	2			1.953"
	J400 7071	2			2.375"
	J400 7265	2			2.500"
	J400 5607	AR			2.625"
8	J097 1066	2			SLEEVE, Seatbelt
9	J400 7263	2			CAP
10					SPACER
	J400 7209	2			.500"
	J576 2138	2			.562"
	J576 2136	2			1.562"
11					WASHER
	J400 4616	2			.781"
	J400 7264	2			1.095"
	J400 5702	2			1.250"
	J097 4497	2			2.000"
12	J575 6587	2			COVER, Web Guide
13	J400 7262	2			PLUG
14	J368 4028	2			COVER, Bolt, P.A.R.
15	J576 2135	2		88	SEAL
16	J576 2134	2		88	CUP ***
17	J400 6747	4		88	RIVET
18					SEATBELT ***
					Without EXPORT
	J545 2261	2			With Front Lap Type Seatbelts
	J575 5915	2			1981-84: With Front Shoulder and Lap Type Seatbelts

MODEL CODES

16=Cherokee 2 Dr.(1981-83)	78=Cherokee 4WD-4 Dr.(1984-86)	64=Comanche 2WD-6 Ft. Box(1986)	25=J-10 Truck 7 Ft. Box(1981-84)
17=Cherokee 2 Dr.(1981-83)	85=CJ-5 (1981-83)	66=Comanche 2WD-7 Ft. Box(1986)	26=J10 Truck 8 Ft. Box(1981-86)
73=Cherokee 2WD-2 Dr.(1984-86)	86=CJ-6(1981)	63=Comanche 4WD-6 Ft. Box(1986)	27=J-20 Truck 8 Ft. Box(1981-86)
74=Cherokee 2WD-4 Dr.(1984-86)	87=CJ-7(1981-86)	65=Comanche 4WD-7 Ft. Box(1986)	15=Wagoneer 4 Dr.(1981-83)
18=Cherokee 4 Dr.(1981-83)	88=CJ-8, Scrambler(1981-86)	15=Grand Wagoneer 4 Dr.(1984-86)	75=Wagoneer 4WD-4 Dr.(1984-86)
77=Cherokee 4WD-2 Dr.(1984-86)			

BODY
CJ=CJ-5, CJ-6, CJ-7, CJ-8, Scrambler(1981-86)
MJ=Comanche Pickup(1986)

STYLES
SJ=Wagoneer(1981-83), Grand Wagoneer(1984-86), Cherokee(1981-83), J-10, J-20(1981-86)
XJ=Wagoneer(1984-86), Cherokee(1984-86)

AR = Use as Required - = Non Illustrated Part P.A.R. = Paint as Required

SEAT BELTS CJ-5,6,7,8, SCRAMBLER
Figure 46-2400

81J 046 2400

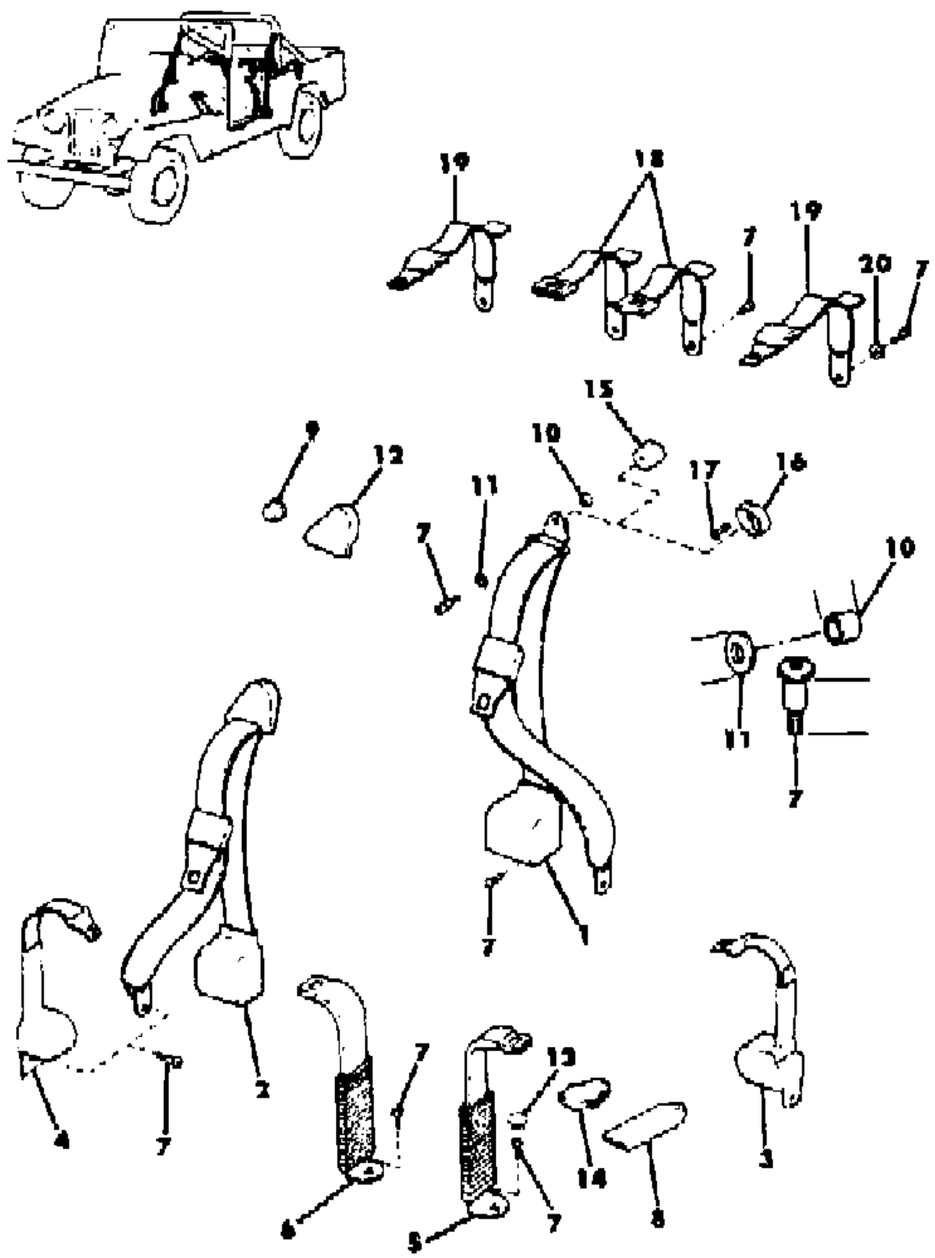

ITEM	PART NUMBER	QTY	BODY	MODEL	DESCRIPTION
	J576 5289	1			1985-86: With Rear Fold and Tumble Seat
					EXPORT
	J576 0333	2			With Rear Bench Seat, with Rear Fold and Tumble Seat
19					SEATBELT ***
					Without EXPORT
	J545 1918	2			With Front Lap Type Seatbelts
	J575 5914	2			1981-84: with Front Shoulder and Lap Type Seatbelts
	J576 5288	2			1985-86: With Rear Fold and Tumble Seat
					EXPORT
	J576 0076	2			With Rear Bench Seat
	J576 0078	2			With Rear Fold and Tumble Seat
20					WASHER
	J012 0396	4			1981
	J400 3805	2			1985-86

MODEL CODES

16=Cherokee 2 Dr.(1981-83)	78=Cherokee 4WD-4 Dr.(1984-86)	64=Comanche 2WD-6 Ft. Box(1986)	25=J-10 Truck 7 Ft. Box(1981-84)
17=Cherokee 2 Dr.(1981-83)	85=CJ-5 (1981-83)	66=Comanche 2WD-7 Ft. Box(1986)	26=J10 Truck 8 Ft. Box(1981-86)
73=Cherokee 2WD-2 Dr.(1984-86)	86=CJ-6(1981)	63=Comanche 4WD-6 Ft. Box(1986)	27=J-20 Truck 8 Ft. Box(1981-86)
74=Cherokee 2WD-4 Dr.(1984-86)	87=CJ-7(1981-86)	65=Comanche 4WD-7 Ft. Box(1986)	15=Wagoneer 4 Dr.(1981-83)
18=Cherokee 4 Dr.(1981-83)	88=CJ-8, Scrambler(1981-86)	15=Grand Wagoneer 4 Dr.(1984-86)	75=Wagoneer 4WD-4 Dr.(1984-86)
77=Cherokee 4WD-2 Dr.(1984-86)			

BODY
CJ=CJ-5, CJ-6, CJ-7, CJ-8, Scrambler(1981-86)
MJ=Comanche Pickup(1986)

STYLES
SJ=Wagoneer(1981-83), Grand Wagoneer(1984-86), Cherokee(1981-83), J-10, J-20(1981-86)
XJ=Wagoneer(1984-86), Cherokee(1984-86)

AR = Use as Required - = Non Illustrated Part P.A.R. = Paint as Required

« RETURN TO GROUP INDEX

«

Figure 46-2400

ILLUSTRATION NOT AVAILABLE AT TIME OF PUBLICATION

GROUP 47 - XJ CHEROKEE, XJ WAGONEER, COMANCHE INTERIOR TRIM

ILLUSTRATION TITLE	GROUP-FIG. NO.
INSULATION XJ CHEROKEE, XJ WAGONEER, COMANCHE	Fig. 47-100
HEADLINING AND UPPER TRIM MOULDINGS COMANCHE	Fig. 47-200
HEADLINING AND UPPER TRIM MOULDINGS XJ CHEROKEE, XJ WAGONEER	Fig. 47-300
SUNVISORS AND VANITY MIRRORS 1984 XJ CHEROKEE, XJ WAGONEER	Fig. 47-400
SUNVISORS AND VANITY MIRRORS 1985 XJ CHEROKEE, XJ WAGONEER	Fig. 47-500
SUNVISORS AND VANITY MIRRORS 1986 XJ CHEROKEE, XJ WAGONEER, COMANCHE	Fig. 47-600
PANELS, INTERIOR TRIM, FRONT 2 DOOR XJ CHEROKEE	Fig. 47-700
PANELS, INTERIOR TRIM, REAR 2 DOOR XJ CHEROKEE	Fig. 47-800
PANELS, INTERIOR TRIM, REAR COMANCHE	Fig. 47-900
PANELS, INTERIOR TRIM, FRONT 4 DOOR XJ CHEROKEE, XJ WAGONEER	Fig. 47-1000
PANELS, INTERIOR TRIM, REAR 4 DOOR XJ CHEROKEE, XJ WAGONEER	Fig. 47-1100
CARPETS AND MATS XJ CHEROKEE, XJ WAGONEER, COMANCHE	Fig. 47-1200
PANELS, DOOR TRIM 2 DOOR, 1984-85 XJ CHEROKEE	Fig. 47-1300
PANELS, DOOR TRIM 2 DOOR, 1986 XJ CHEROKEE	Fig. 47-1400
PANELS, DOOR TRIM 4 DOOR, 1984-85 XJ CHEROKEE	Fig. 47-1500
PANELS, DOOR TRIM 4 DOOR, 1986 XJ CHEROKEE	Fig. 47-1600
PANELS, DOOR TRIM 4 DOOR, 1984-85 XJ CHEROKEE	Fig. 47-1700
PANELS, DOOR TRIM 4 DOOR, 1986 XJ WAGONEER	Fig. 47-1800
PANELS, DOOR TRIM COMANCHE	Fig. 47-1900
INTERIOR TRIM PARTS 2 DOOR, 4 DOOR XJ CHEROKEE, XJ WAGONEER, COMANCHE	Fig. 47-2000
FRAME AND PAD 2 DOOR WAGON AND TRUCK XJ CHEROKEE AND COMANCHE	Fig. 47-2100
FRAME AND PAD 4 DOOR WITH BUCKET SEATS XJ CHEROKEE, XJ WAGONEER	Fig. 47-2200
FRAME AND PAD WITH BENCH SEAT COMANCHE	Fig. 47-2300
FRAME AND PAD REAR SEAT BACK XJ CHEROKEE, XJ WAGONEER	Fig. 47-2400
FRAME AND PAD REAR SEAT CUSHION XJ CHEROKEE, XJ WAGONEER	Fig. 47-2500
COVERS, FRONT SEAT 2 DOOR, 1984-85 XJ CHEROKEE	Fig. 47-2600
COVERS, SEAT 2 DOOR, CLOTH 1986 XJ CHEROKEE	Fig. 47-2700
COVERS, SEAT 2 DOOR, VINYL 1986 XJ CHEROKEE	Fig. 47-2800
COVERS, FRONT SEAT 4 DOOR, CLOTH, 1984-85 XJ CHEROKEE	Fig. 47-2900
COVERS, SEAT 4 DOOR, CLOTH AND LEATHER, 1986 XJ CHEROKEE	Fig. 47-3000
COVERS, FRONT SEAT 4 DOOR, VINYL, 1984-85 XJ CHEROKEE	Fig. 47-3100
COVERS, SEAT 4 DOOR, VINYL, 1986 XJ CHEROKEE	Fig. 47-3200
COVERS, FRONT SEAT 4 DOOR, 1984-85 XJ WAGONEER	Fig. 47-3300
COVERS, SEAT 4 DOOR, 1986 XJ CHEROKEE	Fig. 47-3400
COVERS, SEAT BENCH SEAT COMANCHE	Fig. 47-3500
COVERS, SEAT BUCKET SEATS COMANCHE	Fig. 47-3600
COVERS, REAR SEAT 1984-85 XJ CHEROKEE, XJ WAGONEER	Fig. 47-3700
SEAT TRACK, W/O POWER SEATS BUCKET SEATS XJ CHEROKEE, XJ WAGONEER	Fig. 47-3800
SEAT TRACK, W/POWER SEATS BUCKET SEATS XJ CHEROKEE, XJ WAGONEER	Fig. 47-3900

ILLUSTRATION TITLE **GROUP-FIG. NO.**

PCV SYSTEMS (Continued)

SEAT TRACK, W/POWER SEATS BUCKET SEATS XJ CHEROKEE, XJ WAGONEER . . . . . Fig. 47-3900
COVERS, FRONT SEAT TRACK BUCKET SEATS, W/POWER SEATS XJ CHEROKEE, XJ WAGONEER . . . Fig. 47-4000
SEAT TRACK BUCKET OR BENCH SEATS COMANCHE . . . . . Fig. 47-4100
SEAT BELTS W/O ECE, 1984-85 XJ CHEROKEE, XJ WAGONEER . . . . . Fig. 47-4200
SEAT BELTS W/O ECE, 1986 XJ CHEROKEE . . . . . Fig. 47-4300
SEAT BELTS, FRONT, FOUR DOOR WAGON W/O ECE, 1986 XJ CHEROKEE, XJ WAGONEER . . . . . Fig. 47-4400
SEAT BELTS, FRONT ECONOMIC COMMSSION OF EUROPE XJ CHEROKEE, XJ WAGONEER . . . . . Fig. 47-4500
SEAT BELTS, FRONT COMANCHE . . . . . Fig. 47-4600
SEAT BELTS, REAR W/O ECE XJ CHEROKEE, XJ WAGONEER . . . . . Fig. 47-4700
SEAT BELTS, REAR ECONOMIC COMMISSION OF EUROPE XJ CHEROKEE, XJ WAGONEER . . . . . Fig. 47-4800
COVER, CARGO XJ CHEROKEE, XJ WAGONEER . . . . . Fig. 47-4900

INSULATION XJ CHEROKEE, XJ WAGONEER, COMANCHE
Figure 47-100

81J 047 100

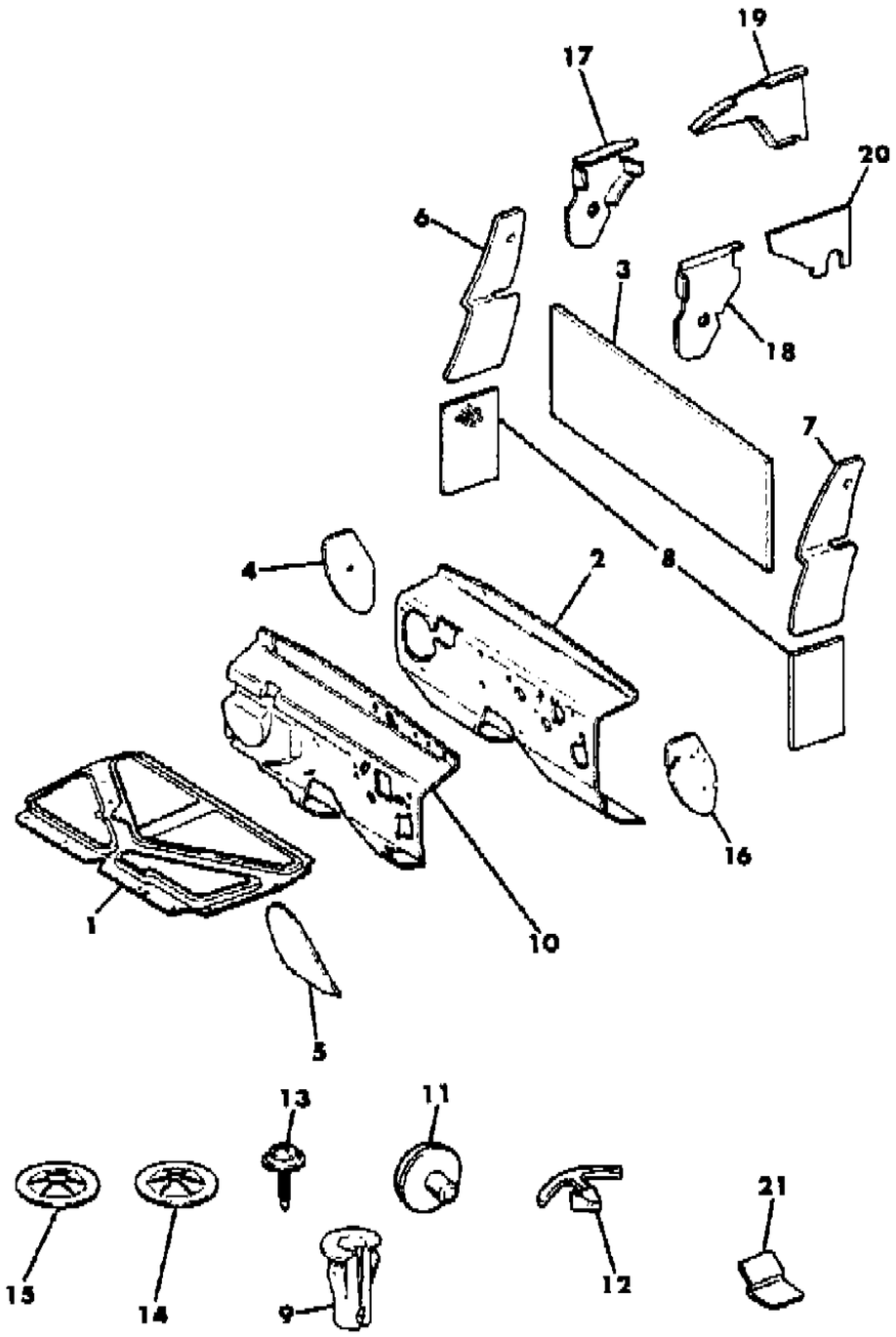

ITEM	PART NUMBER	QTY	BODY	MODEL	DESCRIPTION
1					INSULATION, Hood
	5500 1887	1			Gas
	5500 4899	1			Diesel
2					INSULATION, Dash
	5500 0997	1			Gas
	5500 4457	1			Diesel
3	5500 8106	1	MJ		INSULATION, Back Panel
4	5500 2684	1			INSULATION, Cowl
5	5500 4230	1			INSULATION, Toe Board
6	5501 0852	1	MJ		INSULATION, Quarter Panel
7	5501 0853	1	MJ		INSULATION, Quarter Panel
8	5500 8104	2	MJ		INSULATION, Quarter Panel
9	3420 1782	4			CLIP
10	5500 4456	1			INSULATION, Dash, Diesel
11	T307 7081	8			CLIP
12	J400 5513	17			RETAINER
13	J400 3095	2			SCREW
14	J400 5955	4			NUT
15	J400 0235	2			NUT
16	5500 2685	1			INSULATION, Cowl
17	5500 5498	1		73,77	INSULATION, Quarter Panel
18	5500 5499	1		73,77	INSULATION, Quarter Panel
19	5500 5497	1		74,75,7	INSULATION, Quarter Panel
20	5500 2687	1		74,75,7	INSULATION, Quarter Panel
21	5500 4229	4			RETAINER

MODEL CODES

16=Cherokee 2 Dr.(1981-83)
17=Cherokee 2 Dr.(1981-83)
73=Cherokee 2WD-2 Dr.(1984-86)
74=Cherokee 2WD-4 Dr.(1984-86)
18=Cherokee 4 Dr.(1981-83)
77=Cherokee 4WD-2 Dr.(1984-86)
78=Cherokee 4WD-4 Dr.(1984-86)
85=CJ-5 (1981-83)
86=CJ-6(1981)
87=CJ-7(1981-86)
88=CJ-8, Scrambler(1981-86)
64=Comanche 2WD-6 Ft. Box(1986)
66=Comanche 2WD-7 Ft. Box(1986)
63=Comanche 4WD-6 Ft. Box(1986)
65=Comanche 4WD-7 Ft. Box(1986)
15=Grand Wagoneer 4 Dr.(1984-86)
25=J-10 Truck 7 Ft. Box(1981-84)
26=J10 Truck 8 Ft. Box(1981-86)
27=J-20 Truck 8 Ft. Box(1981-86)
15=Wagoneer 4 Dr.(1981-83)
75=Wagoneer 4WD-4 Dr.(1984-86)

BODY
CJ=CJ-5, CJ-6, CJ-7, CJ-8, Scrambler(1981-86)
MJ=Comanche Pickup(1986)

STYLES
SJ=Wagoneer(1981-83), Grand Wagoneer(1984-86), Cherokee(1981-83), J-10, J-20(1981-86)
XJ=Wagoneer(1984-86), Cherokee(1984-86)

AR = Use as Required - = Non Illustrated Part P.A.R. = Paint as Required

« RETURN TO GROUP INDEX

HEADLINING AND UPPER TRIM MOULDINGS COMANCHE
Figure 47-200

81J 047 200

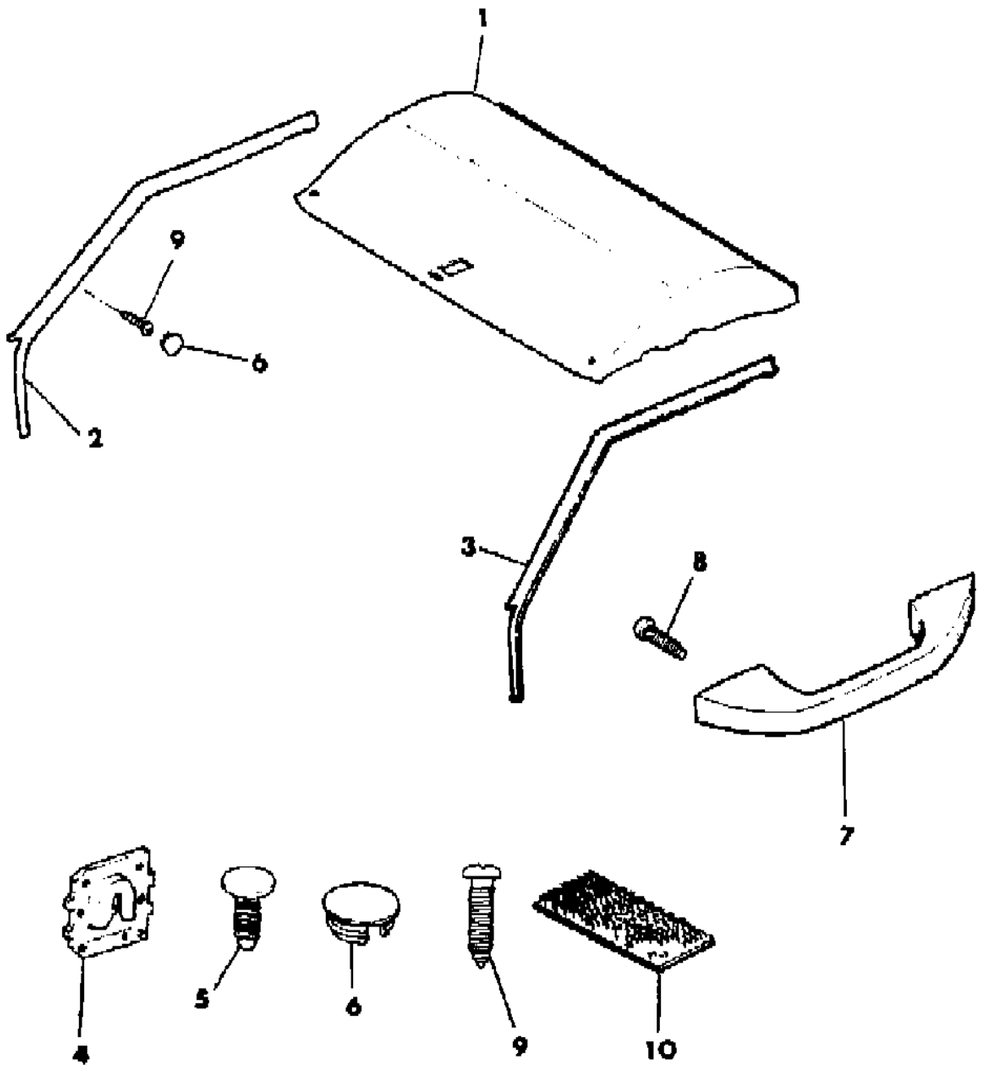

ITEM	PART NUMBER	QTY	BODY	MODEL	DESCRIPTION
1					HEADLINING ***
	5500 6347	1			Black Cloth
	5500 6346	1			Med. Blue Cloth
	5501 1682	1			Cordovan Cloth
	5500 6348	1			Garnet Cloth
	5500 6349	1			Honey Cloth
	5501 1683	1			Tan Cloth
	5500 6351	1			Black Vinyl
	5500 6350	1			Med. Blue Vinyl
	5500 6352	1			Garnet Vinyl
	5500 6353	1			Honey Vinyl
2	5500 7188	1			MOULDING, Garnish, P.A.R.
3	5500 7181	1			MOULDING, Garnish, P.A.R.
4	3420 1299	2			CLIP, Retaining
5	3420 1545	2			CLIP
6	3420 1485	4			PLUG, P.A.R.
7					HANDLE, Assist
	5501 0763	1			Black
	5501 0762	1			Med. Blue
	5501 1622	1			Cordovan
	5500 7550	1			Garnet
	5500 7552	1			Honey
	5501 1623	1			Tan
8	3420 2189	2			SCREW
9	1150 0055	4			SCREW
10	5500 6362	2			FASTENER, Velcro Hook

MODEL CODES

16=Cherokee 2 Dr.(1981-83)
17=Cherokee 2 Dr.(1981-83)
73=Cherokee 2WD-2 Dr.(1984-86)
74=Cherokee 2WD-4 Dr.(1984-86)
18=Cherokee 4 Dr.(1981-83)
77=Cherokee 4WD-2 Dr.(1984-86)
78=Cherokee 4WD-4 Dr.(1984-86)
85=CJ-5 (1981-83)
86=CJ-6(1981)
87=CJ-7(1981-86)
88=CJ-8, Scrambler(1981-86)
64=Comanche 2WD-6 Ft. Box(1986)
66=Comanche 2WD-7 Ft. Box(1986)
63=Comanche 4WD-6 Ft. Box(1986)
65=Comanche 4WD-7 Ft. Box(1986)
15=Grand Wagoneer 4 Dr.(1984-86)
25=J-10 Truck 7 Ft. Box(1981-84)
26=J10 Truck 8 Ft. Box(1981-86)
27=J-20 Truck 8 Ft. Box(1981-86)
15=Wagoneer 4 Dr.(1981-83)
75=Wagoneer 4WD-4 Dr.(1984-86)

BODY
CJ=CJ-5, CJ-6, CJ-7, CJ-8, Scrambler(1981-86)
MJ=Comanche Pickup(1986)

STYLES
SJ=Wagoneer(1981-83), Grand Wagoneer(1984-86), Cherokee(1981-83), J-10, J-20(1981-86)
XJ=Wagoneer(1984-86), Cherokee(1984-86)

AR = Use as Required - = Non Illustrated Part P.A.R. = Paint as Required

« RETURN TO GROUP INDEX

HEADLINING AND UPPER TRIM MOULDINGS XJ CHEROKEE, XJ WAGONEER
Figure 47-300

81J 047 300

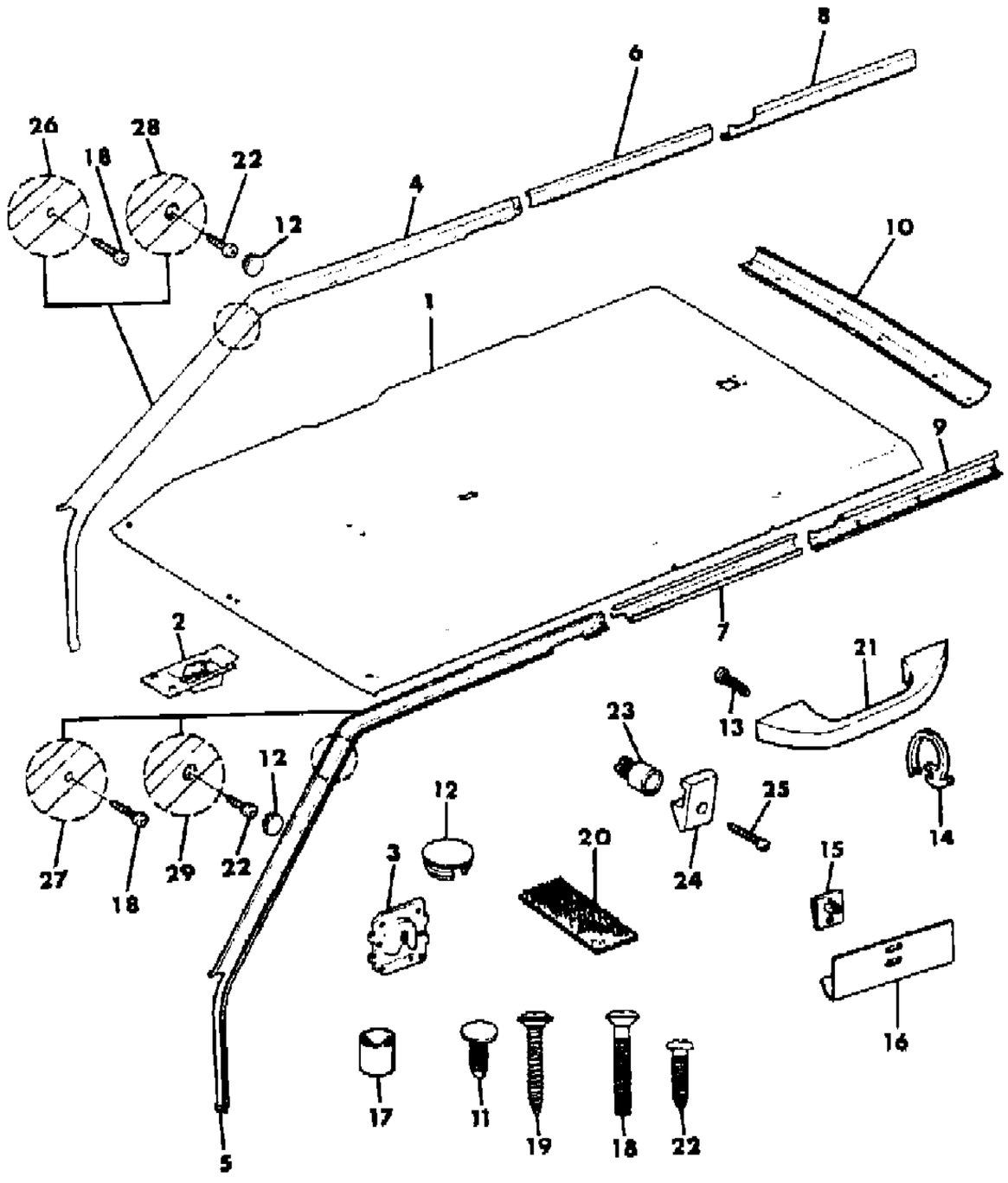

ITEM	PART NUMBER	QTY	BODY	MODEL	DESCRIPTION
1					HEADLINING ***
					CLOTH
	5500 5353	1			Almond, 1984-85
	5500 9277	1			Black, 1986
	5500 9276	1			Med. Blue, 1985-86
	5500 5352	1			Slate Blue, 1984-85
	5500 5352	1			Slate Blue, 1984-85
	5501 8129	1			Charcoal, 1986
	5501 1628	1			Cordovan, 1986
	5500 1590	1			Garnet, 1984-86
	5500 5727	1			Honey, 1985-86
	5500 1591	1			Nutmeg, 1984
	5501 1629	1			Tan, 1986
					VINYL
	5500 1587	1			Almond, 1984-85
	5500 9287	1			Black, 1986
	5500 1586	1			Slate Blue, 1984-85
	5500 1588	1			Garnet, 1984-85
	5500 5728	1			Honey, 1985-86
	5500 1589	1			Nutmeg, 1984
2	5500 6762	1			HOUSING, Keyless Entry, P.A.R.
3	3420 1299	AR			CLIP, Retaining
4					MOULDING, Garnish, P.A.R.
					1984
	5500 2562	1			4-Door
	5500 2570	1			2-Door
5					MOULDING, Garnish, P.A.R.
					1984
	5500 2563	1			4-Door
	5500 2571	1			2-Door
6					MOULDING, Headlining, P.A.R.
	5500 2108	1			4-Door, 1984
	5500 7164	1			4-Door, 1985-86
7					MOULDING, Headlining, P.A.R.
	5500 2109	1			4-Door, 1984
	5500 7165	1			4-Door, 1985-86
8					MOULDING, Headlining, P.A.R.
	5500 0446	1			4-Door, 1984-86
	5500 0448	1			2-Door, 1984

MODEL CODES

16=Cherokee 2 Dr.(1981-83)
17=Cherokee 2 Dr.(1981-83)
73=Cherokee 2WD-2 Dr.(1984-86)
74=Cherokee 2WD-4 Dr.(1984-86)
18=Cherokee 4 Dr.(1981-83)
77=Cherokee 4WD-2 Dr.(1984-86)
78=Cherokee 4WD-4 Dr.(1984-86)
85=CJ-5 (1981-83)
86=CJ-6(1981)
87=CJ-7(1981-86)
88=CJ-8, Scrambler(1981-86)
64=Comanche 2WD-6 Ft. Box(1986)
66=Comanche 2WD-7 Ft. Box(1986)
63=Comanche 4WD-6 Ft. Box(1986)
65=Comanche 4WD-7 Ft. Box(1986)
15=Grand Wagoneer 4 Dr.(1984-86)
25=J-10 Truck 7 Ft. Box(1981-84)
26=J10 Truck 8 Ft. Box(1981-86)
27=J-20 Truck 8 Ft. Box(1981-86)
15=Wagoneer 4 Dr.(1981-83)
75=Wagoneer 4WD-4 Dr.(1984-86)

BODY
CJ=CJ-5, CJ-6, CJ-7, CJ-8, Scrambler(1981-86)
MJ=Comanche Pickup(1986)

STYLES
SJ=Wagoneer(1981-83), Grand Wagoneer(1984-86), Cherokee(1981-83), J-10, J-20(1981-86)
XJ=Wagoneer(1984-86), Cherokee(1984-86)

AR = Use as Required - = Non Illustrated Part P.A.R. = Paint as Required

HEADLINING AND UPPER TRIM MOULDINGS XJ CHEROKEE, XJ WAGONEER
Figure 47-300

81J 047 300

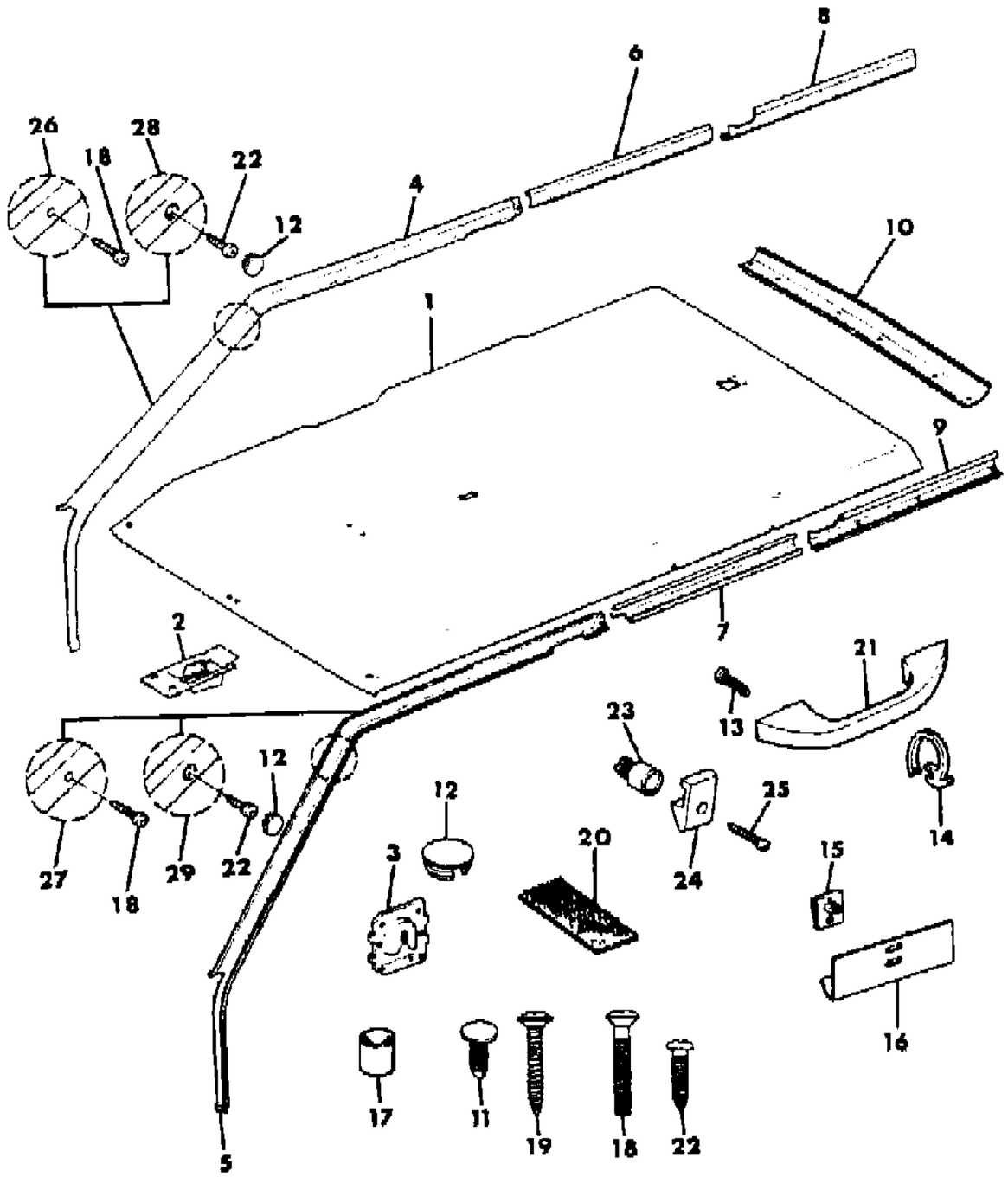

ITEM	PART NUMBER	QTY	BODY	MODEL	DESCRIPTION
	5500 7162	1			2-Door, 1985-86
9					MOULDING, Headlining, P.A.R.
	5500 0447	1			4-Door, 1984-86
	5500 0449	1			2-Door, 1984
	5500 7163	1			2-Door, 1985-86
10					MOULDING, Headlining, P.A.R.
	5500 2886	1			1984-86
11	3420 1545	6			CLIP
12	3420 1485	4			PLUG, P.A.R.
13	3420 2189	6			SCREW
14					HOOK, Coat
	5500 7565	2			Almond, 1985
	5501 0765	2			Black, 1986
	5501 0764	2			Med. Blue, 1985-86
	5500 7565	2			Slate Blue, 1985
	5501 1702	2			Cordovan, 1986
	5500 7566	2			Garnet, 1985-86
	5500 7568	2			Honey, 1985-86
	5501 1703	2			Tan, 1986
15	J400 0322	6			CLIP
16	J368 1225	6			RETAINER
17	5500 2520	6			SPACER
18	1150 1150	10			SCREW
19	3420 1413	6			SCREW
20	5500 6362	2			FASTENER, Velcro Hook
21					HANDLE, Assist
	5500 7549	3			Almond, 1985
	5501 0763	3			Black, 1986
	5501 0762	3			Med. Blue, 1985-86
	5500 7548	3			Slate Blue, 1985
	5501 1662	3			Cordovan, 1986
	5500 7550	3			Garnet, 1985-86
	5500 7552	3			Honey, 1985-86
	5501 1623	3			Tan, 1986
22	1150 0055	4			SCREW, 1985-86
23	3420 1504	2			NUT, Push
24					HOOK, Coat, 1984
	5500 1530	2			Almond
	5500 1531	2			Slate Blue

MODEL CODES
16=Cherokee 2 Dr.(1981-83)
17=Cherokee 2 Dr.(1981-83)
73=Cherokee 2WD-2 Dr.(1984-86)
74=Cherokee 2WD-4 Dr.(1984-86)
18=Cherokee 4 Dr.(1981-83)
77=Cherokee 4WD-2 Dr.(1984-86)
78=Cherokee 4WD-4 Dr.(1984-86)
85=CJ-5 (1981-83)
86=CJ-6(1981)
87=CJ-7(1981-86)
88=CJ-8, Scrambler(1981-86)
64=Comanche 2WD-6 Ft. Box(1986)
66=Comanche 2WD-7 Ft. Box(1986)
63=Comanche 4WD-6 Ft. Box(1986)
65=Comanche 4WD-7 Ft. Box(1986)
15=Grand Wagoneer 4 Dr.(1984-86)
25=J-10 Truck 7 Ft. Box(1981-84)
26=J10 Truck 8 Ft. Box(1981-86)
27=J-20 Truck 8 Ft. Box(1981-86)
15=Wagoneer 4 Dr.(1981-83)
75=Wagoneer 4WD-4 Dr.(1984-86)

BODY
CJ=CJ-5, CJ-6, CJ-7, CJ-8, Scrambler(1981-86)
MJ=Comanche Pickup(1986)

STYLES
SJ=Wagoneer(1981-83), Grand Wagoneer(1984-86), Cherokee(1981-83), J-10, J-20(1981-86)
XJ=Wagoneer(1984-86), Cherokee(1984-86)

AR = Use as Required - = Non Illustrated Part P.A.R. = Paint as Required

HEADLINING AND UPPER TRIM MOULDINGS XJ CHEROKEE, XJ WAGONEER
Figure 47-300

81J 047 300

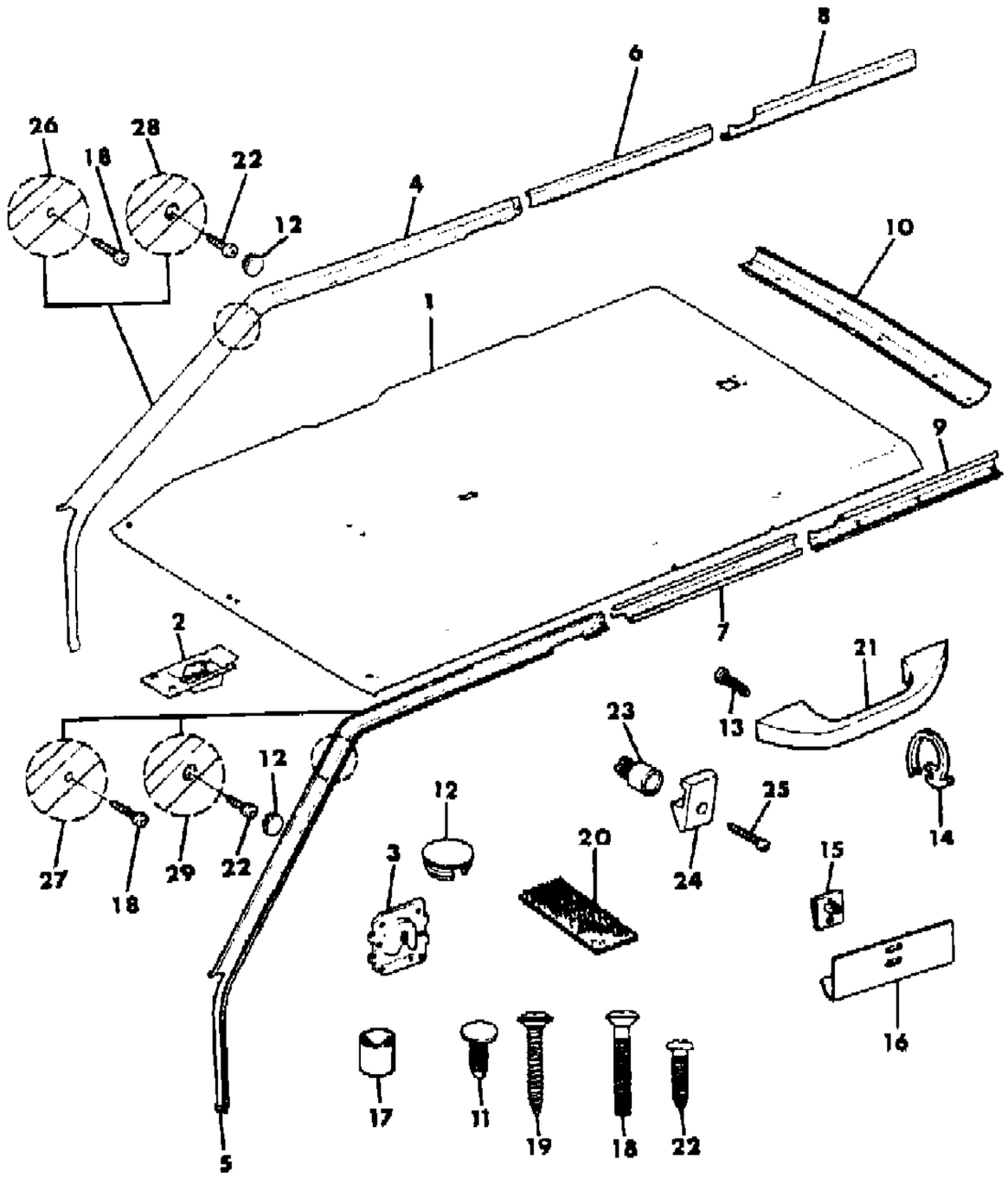

ITEM	PART NUMBER	QTY	BODY	MODEL	DESCRIPTION
	5500 1533	2			Garnet
	5500 1532	2			Nutmeg
25	3420 1593	2			SCREW
26					MOULDING, Garnish, P.A.R.
	5500 7604	1			4-Door, 1985
	5500 7572	1			2-Door, 1985
27					MOULDING, Garnish, P.A.R.
	5500 2563	1			4-Door, 1985
	5500 2571	1			2-Door, 1985
28					MOULDING, Garnish, P.A.R.
	5500 7188	1			4-Door, 1985-86
	5500 7196	1			2-Door, 1985-86
29					MOULDING, Garnish
	5500 7181	1			4-Door, 1985-86
	5500 7197	1			2-Door, 1985-86

MODEL CODES
16=Cherokee 2 Dr.(1981-83)
17=Cherokee 2 Dr.(1981-83)
73=Cherokee 2WD-2 Dr.(1984-86)
74=Cherokee 2WD-4 Dr.(1984-86)
18=Cherokee 4 Dr.(1981-83)
77=Cherokee 4WD-2 Dr.(1984-86)
78=Cherokee 4WD-4 Dr.(1984-86)
85=CJ-5 (1981-83)
86=CJ-6(1981)
87=CJ-7(1981-86)
88=CJ-8, Scrambler(1981-86)
64=Comanche 2WD-6 Ft. Box(1986)
66=Comanche 2WD-7 Ft. Box(1986)
63=Comanche 4WD-6 Ft. Box(1986)
65=Comanche 4WD-7 Ft. Box(1986)
15=Grand Wagoneer 4 Dr.(1984-86)
25=J-10 Truck 7 Ft. Box(1981-84)
26=J10 Truck 8 Ft. Box(1981-86)
27=J-20 Truck 8 Ft. Box(1981-86)
15=Wagoneer 4 Dr.(1981-83)
75=Wagoneer 4WD-4 Dr.(1984-86)

BODY
CJ=CJ-5, CJ-6, CJ-7, CJ-8, Scrambler(1981-86)
MJ=Comanche Pickup(1986)

STYLES
SJ=Wagoneer(1981-83), Grand Wagoneer(1984-86), Cherokee(1981-83), J-10, J-20(1981-86)
XJ=Wagoneer(1984-86), Cherokee(1984-86)

AR = Use as Required - = Non Illustrated Part P.A.R. = Paint as Required

« RETURN TO GROUP INDEX

81J 047 400

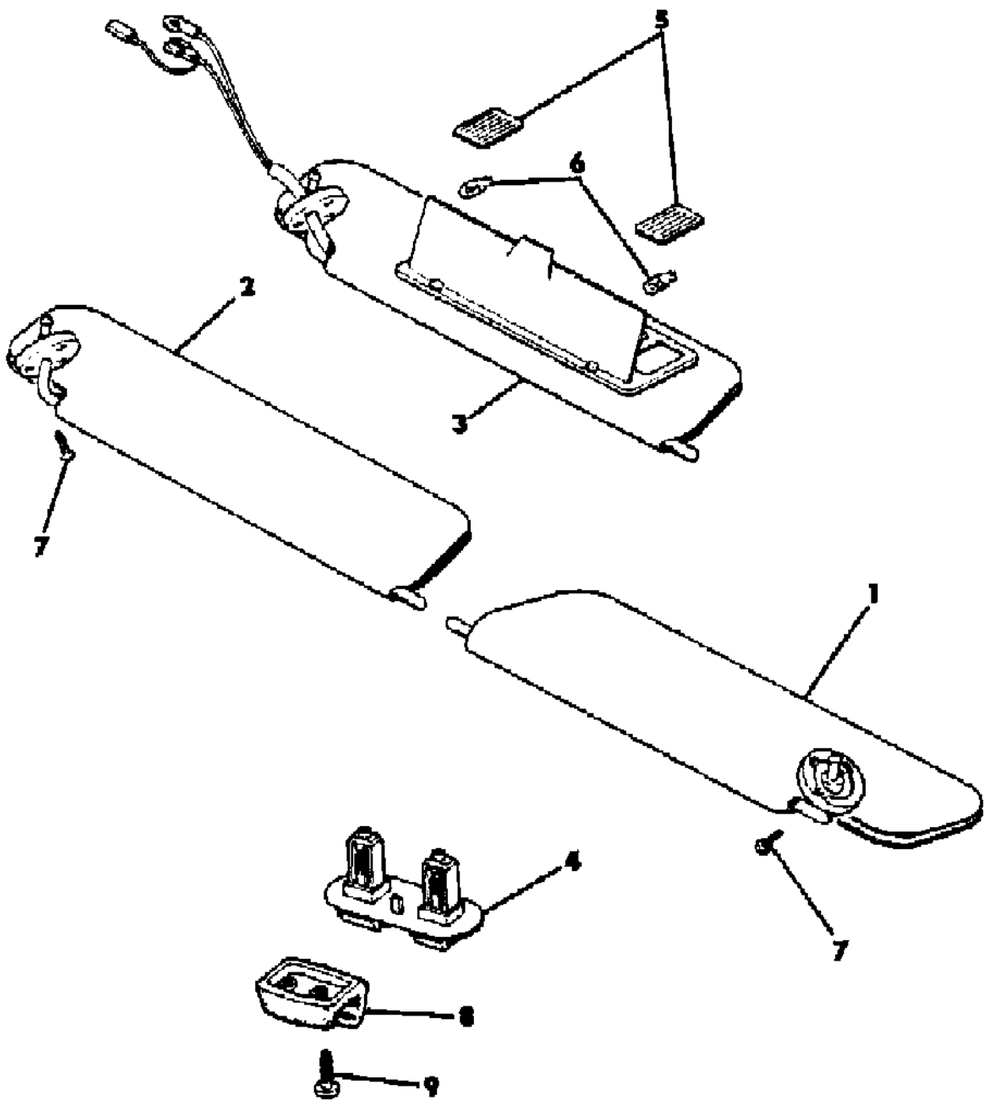

ITEM	PART NUMBER	QTY	BODY	MODEL	DESCRIPTION
1					VISOR, Sun
					CLOTH
	5500 1492	1			Almond
	5500 1494	1			Slate Blue
	5500 1498	1			Garnet
	5500 1496	1			Nutmeg
					VINYL
	5500 3661	1			Almond
	5500 3660	1			Slate Blue
	5500 5346	1			Garnet
	5500 4347	2			Nutmeg
2					VISOR, Sun
					CLOTH
	5500 1492	1			Almond
	5500 1494	1			Slate Blue
					VINYL
	5500 3661	1			Almond
	5500 3660	1			Slate Blue
3					VISOR, Sun
					CLOTH
	5500 6498	1			Almond
	5500 6497	1			Slate Blue
	5500 6499	1			Garnet
	5500 6500	1			Nutmeg
					VINYL
	5500 6502	1			Almond
	5500 6501	1			Slate Blue
	5500 6503	1			Garnet
	5500 6504	1			Nutmeg
4					SUPPORT, Visor
	5500 4198	1			Almond
	5500 4199	1			Slate Blue
	5500 4201	1			Garnet
	5500 4200	1			Nutmeg
5	8350 0329	2			LENS, Light
6	J812 5723	2			BULB, #74
7	1150 1150	6			SCREW
8	J576 0671	1			SUPPORT, Visor, P.A.R.
9	3420 1467	2			SCREW

MODEL CODES

16=Cherokee 2 Dr.(1981-83)	78=Cherokee 4WD-4 Dr.(1984-86)	64=Comanche 2WD-6 Ft. Box(1986)	25=J-10 Truck 7 Ft. Box(1981-84)
17=Cherokee 2 Dr.(1981-83)	85=CJ-5 (1981-83)	66=Comanche 2WD-7 Ft. Box(1986)	26=J10 Truck 8 Ft. Box(1981-86)
73=Cherokee 2WD-2 Dr.(1984-86)	86=CJ-6(1981)	63=Comanche 4WD-6 Ft. Box(1986)	27=J-20 Truck 8 Ft. Box(1981-86)
74=Cherokee 2WD-4 Dr.(1984-86)	87=CJ-7(1981-86)	65=Comanche 4WD-7 Ft. Box(1986)	15=Wagoneer 4 Dr.(1981-83)
18=Cherokee 4 Dr.(1981-83)	88=CJ-8, Scrambler(1981-86)	15=Grand Wagoneer 4 Dr.(1984-86)	75=Wagoneer 4WD-4 Dr.(1984-86)
77=Cherokee 4WD-2 Dr.(1984-86)			

BODY
CJ=CJ-5, CJ-6, CJ-7, CJ-8, Scrambler(1981-86)
MJ=Comanche Pickup(1986)

STYLES
SJ=Wagoneer(1981-83), Grand Wagoneer(1984-86), Cherokee(1981-83), J-10, J-20(1981-86)
XJ=Wagoneer(1984-86), Cherokee(1984-86)

AR = Use as Required - = Non Illustrated Part P.A.R. = Paint as Required

« RETURN TO GROUP INDEX

SUNVISORS AND VANITY MIRRORS 1985 XJ CHEROKEE, XJ WAGONEER
Figure 47-500

81J 047 500

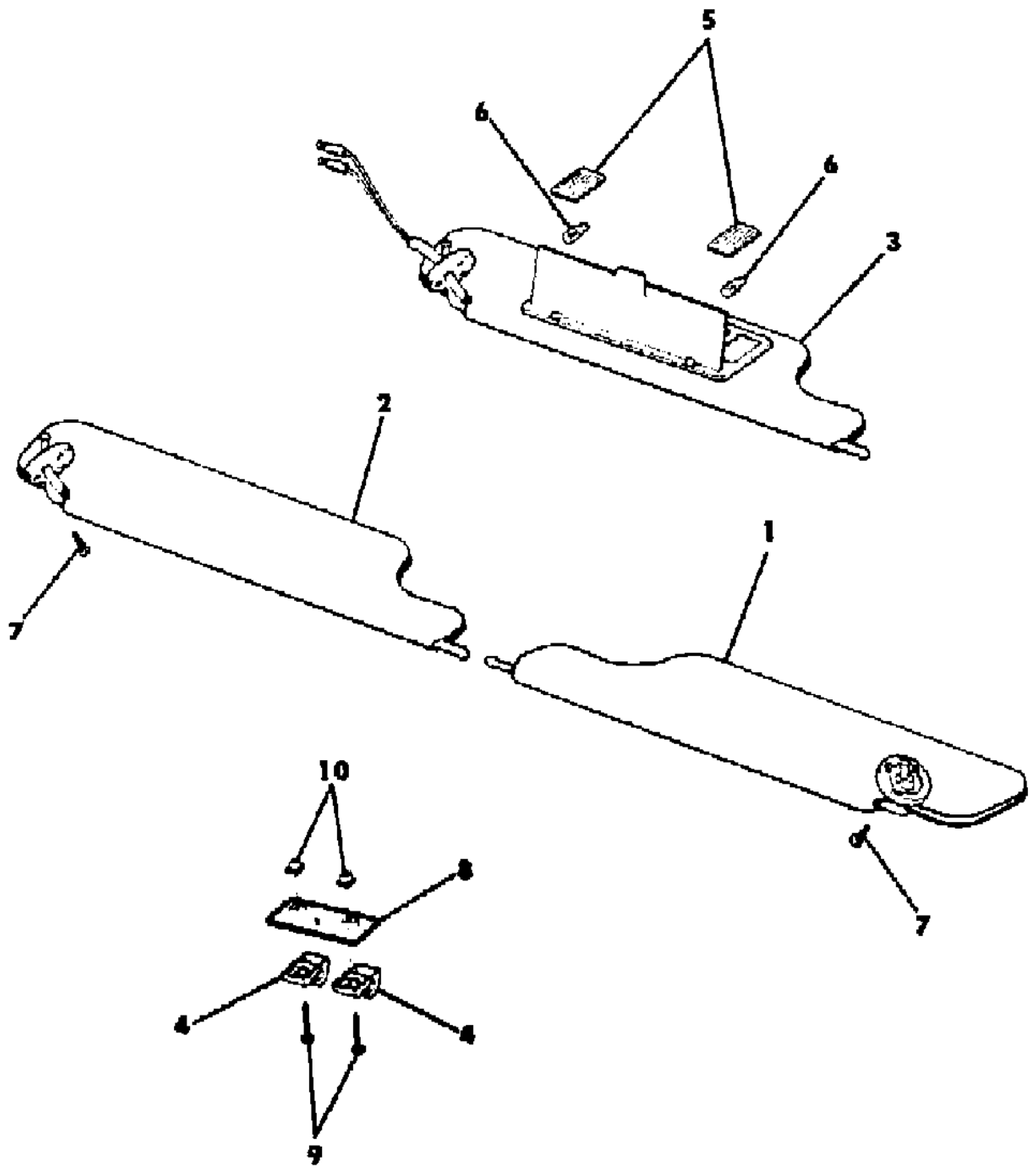

ITEM	PART NUMBER	QTY	BODY	MODEL	DESCRIPTION
1					VISOR, Sun
					CLOTH
	5500 6747	1			Almond
	5500 8146	1			Med. Blue
	5500 6745	1			Slate Blue
	5500 6747	1			Garnet
	5500 6748	1			Honey
					VINYL
	5500 6788	1			Almond
	5500 6737	1			Slate Blue
	5500 6739	1			Garnet
	5500 6740	1			Honey
2					VISOR, Sun
					CLOTH
	5500 6746	1			Almond
	5500 8176	1			Med. Blue
	5500 6745	1			Slate Blue
					VINYL
	5500 6738	1			Almond
	5500 6737	1			Slate Blue
3					VISOR, Sun
					CLOTH
	5500 6750	1			Almond
	5500 8178	1			Med. Blue
	5500 6749	1			Slate Blue
	5500 6751	1			Garnet
	5500 6752	1			Honey
					VINYL
	5500 6742	1			Almond
	5500 6741	1			Slate Blue
	5500 6743	1			Garnet
	5500 6744	1			Honey
4					SUPPORT, Visor
	5500 7719	2			Almond
	5500 8182	2			Med. Blue
	5500 7718	2			Slate Blue
	5500 7720	2			Garnet
	5500 7721	2			Honey
5	8350 0329	2			LENS, Light

MODEL CODES

16=Cherokee 2 Dr.(1981-83)	78=Cherokee 4WD-4 Dr.(1984-86)	64=Comanche 2WD-6 Ft. Box(1986)	25=J-10 Truck 7 Ft. Box(1981-84)
17=Cherokee 2 Dr.(1981-83)	85=CJ-5 (1981-83)	66=Comanche 2WD-7 Ft. Box(1986)	26=J10 Truck 8 Ft. Box(1981-86)
73=Cherokee 2WD-2 Dr.(1984-86)	86=CJ-6(1981)	63=Comanche 4WD-6 Ft. Box(1986)	27=J-20 Truck 8 Ft. Box(1981-86)
74=Cherokee 2WD-4 Dr.(1984-86)	87=CJ-7(1981-86)	65=Comanche 4WD-7 Ft. Box(1986)	15=Wagoneer 4 Dr.(1981-83)
18=Cherokee 4 Dr.(1981-83)	88=CJ-8, Scrambler(1981-86)	15=Grand Wagoneer 4 Dr.(1984-86)	75=Wagoneer 4WD-4 Dr.(1984-86)
77=Cherokee 4WD-2 Dr.(1984-86)			

BODY
CJ=CJ-5, CJ-6, CJ-7, CJ-8, Scrambler(1981-86)
MJ=Comanche Pickup(1986)

STYLES
SJ=Wagoneer(1981-83), Grand Wagoneer(1984-86), Cherokee(1981-83), J-10, J-20(1981-86)
XJ=Wagoneer(1984-86), Cherokee(1984-86)

AR = Use as Required - = Non Illustrated Part P.A.R. = Paint as Required

81J 047 500

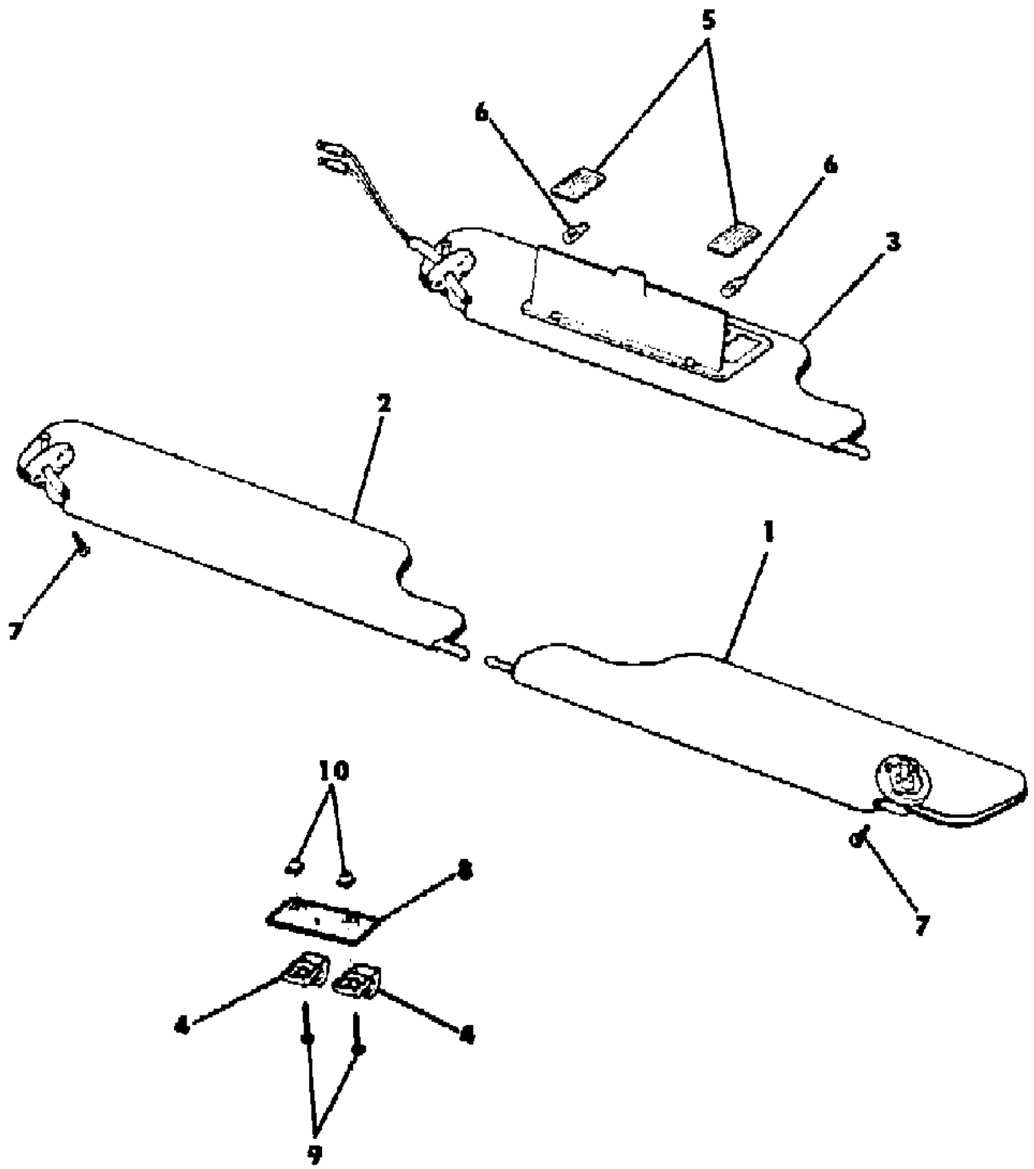

ITEM	PART NUMBER	QTY	BODY	MODEL	DESCRIPTION
6	J812 5723	2			BULB, #74
7	1150 1150	6			SCREW
8	5500 6758	1			BEZEL, Visor Retainer, P.A.R.
9	3420 1679	2			SCREW
10	3420 1284	2			NUT

MODEL CODES

16=Cherokee 2 Dr.(1981-83)
17=Cherokee 2 Dr.(1981-83)
73=Cherokee 2WD-2 Dr.(1984-86)
74=Cherokee 2WD-4 Dr.(1984-86)
18=Cherokee 4 Dr.(1981-83)
77=Cherokee 4WD-2 Dr.(1984-86)
78=Cherokee 4WD-4 Dr.(1984-86)
85=CJ-5 (1981-83)
86=CJ-6(1981)
87=CJ-7(1981-86)
88=CJ-8, Scrambler(1981-86)
64=Comanche 2WD-6 Ft. Box(1986)
66=Comanche 2WD-7 Ft. Box(1986)
63=Comanche 4WD-6 Ft. Box(1986)
65=Comanche 4WD-7 Ft. Box(1986)
15=Grand Wagoneer 4 Dr.(1984-86)
25=J-10 Truck 7 Ft. Box(1981-84)
26=J10 Truck 8 Ft. Box(1981-86)
27=J-20 Truck 8 Ft. Box(1981-86)
15=Wagoneer 4 Dr.(1981-83)
75=Wagoneer 4WD-4 Dr.(1984-86)

BODY
CJ=CJ-5, CJ-6, CJ-7, CJ-8, Scrambler(1981-86)
MJ=Comanche Pickup(1986)

STYLES
SJ=Wagoneer(1981-83), Grand Wagoneer(1984-86), Cherokee(1981-83), J-10, J-20(1981-86)
XJ=Wagoneer(1984-86), Cherokee(1984-86)

AR = Use as Required - = Non Illustrated Part P.A.R. = Paint as Required

81J 047 600

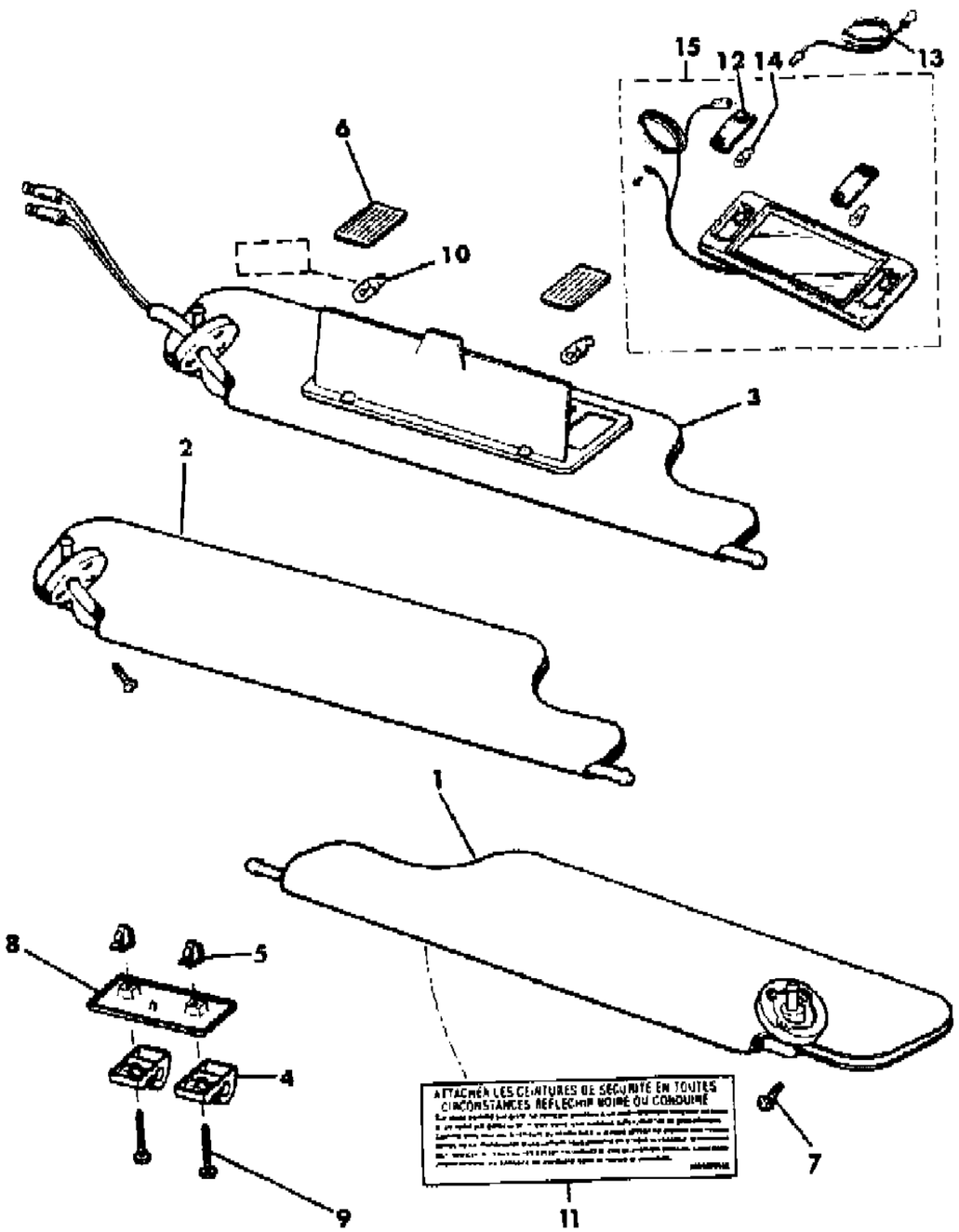

ITEM	PART NUMBER	QTY	BODY	MODEL	DESCRIPTION
1					VISOR, Sun
	5500 8177	1			Black, Cloth
	5500 8176	1			Med. Blue, Cloth
	5501 7841	1			Charcoal
	5501 5217	1			Cordovan, Wagon, U.S., Canada
	5501 1918	1			Cordovan, Truck
	5501 1918	1			Cordovan, Wagon, Export
	5500 9085	1			Garnet, Cloth
	5500 9086	1			Honey, Cloth
	5500 8169	1			Black, Vinyl
	5500 8168	1			Med. Blue, Vinyl
	5500 9089	1			Garnet, Vinyl
	5500 9090	1			Honey, Vinyl
	5501 5219	1			Tan, Wagon, U.S., Canada
	5501 1920	1			Tan, Truck
	5501 1920	1			Tan, Wagon, Export
2					VISOR, Sun
	5500 8177	1			Black, Cloth
	5500 8176	1			Med. Blue, Cloth
	5501 7833	1			Charcoal
	5501 1918	1			Cordovan, Wagon, U.S., Canada
	5501 1918	1			Cordovan, Truck
	5501 1918	1			Cordovan, Wagon, Export
	5500 9085	1			Garnet, Cloth
	5500 9086	1			Honey, Cloth
	5500 8169	1			Black, Vinyl
	5500 8168	1			Med. Blue, Vinyl
	5500 9089	1			Garnet, Vinyl
	5500 9090	1			Honey, Vinyl
	5501 1920	1			Tan, Wagon, U.S., Canada
	5501 1920	1			Tan, Truck
	5501 1920	1			Tan, Wagon, Export
3		1			VISOR, Sun
	5500 8179	1			Black, Cloth
	5500 8178	1			Med. Blue, Cloth
	5500 9093	1			Garnet, Cloth
	5500 9094	1			Honey, Cloth
4					SUPPORT, Visor
	5500 8183	2			Black

MODEL CODES
16=Cherokee 2 Dr.(1981-83)
17=Cherokee 2 Dr.(1981-83)
73=Cherokee 2WD-2 Dr.(1984-86)
74=Cherokee 2WD-4 Dr.(1984-86)
18=Cherokee 4 Dr.(1981-83)
77=Cherokee 4WD-2 Dr.(1984-86)
78=Cherokee 4WD-4 Dr.(1984-86)
85=CJ-5 (1981-83)
86=CJ-6(1981)
87=CJ-7(1981-86)
88=CJ-8, Scrambler(1981-86)
64=Comanche 2WD-6 Ft. Box(1986)
66=Comanche 2WD-7 Ft. Box(1986)
63=Comanche 4WD-6 Ft. Box(1986)
65=Comanche 4WD-7 Ft. Box(1986)
15=Grand Wagoneer 4 Dr.(1984-86)
25=J-10 Truck 7 Ft. Box(1981-84)
26=J10 Truck 8 Ft. Box(1981-86)
27=J-20 Truck 8 Ft. Box(1981-86)
15=Wagoneer 4 Dr.(1981-83)
75=Wagoneer 4WD-4 Dr.(1984-86)

BODY
CJ=CJ-5, CJ-6, CJ-7, CJ-8, Scrambler(1981-86)
MJ=Comanche Pickup(1986)

STYLES
SJ=Wagoneer(1981-83), Grand Wagoneer(1984-86), Cherokee(1981-83), J-10, J-20(1981-86)
XJ=Wagoneer(1984-86), Cherokee(1984-86)

AR = Use as Required - = Non Illustrated Part P.A.R. = Paint as Required

81J 047 600

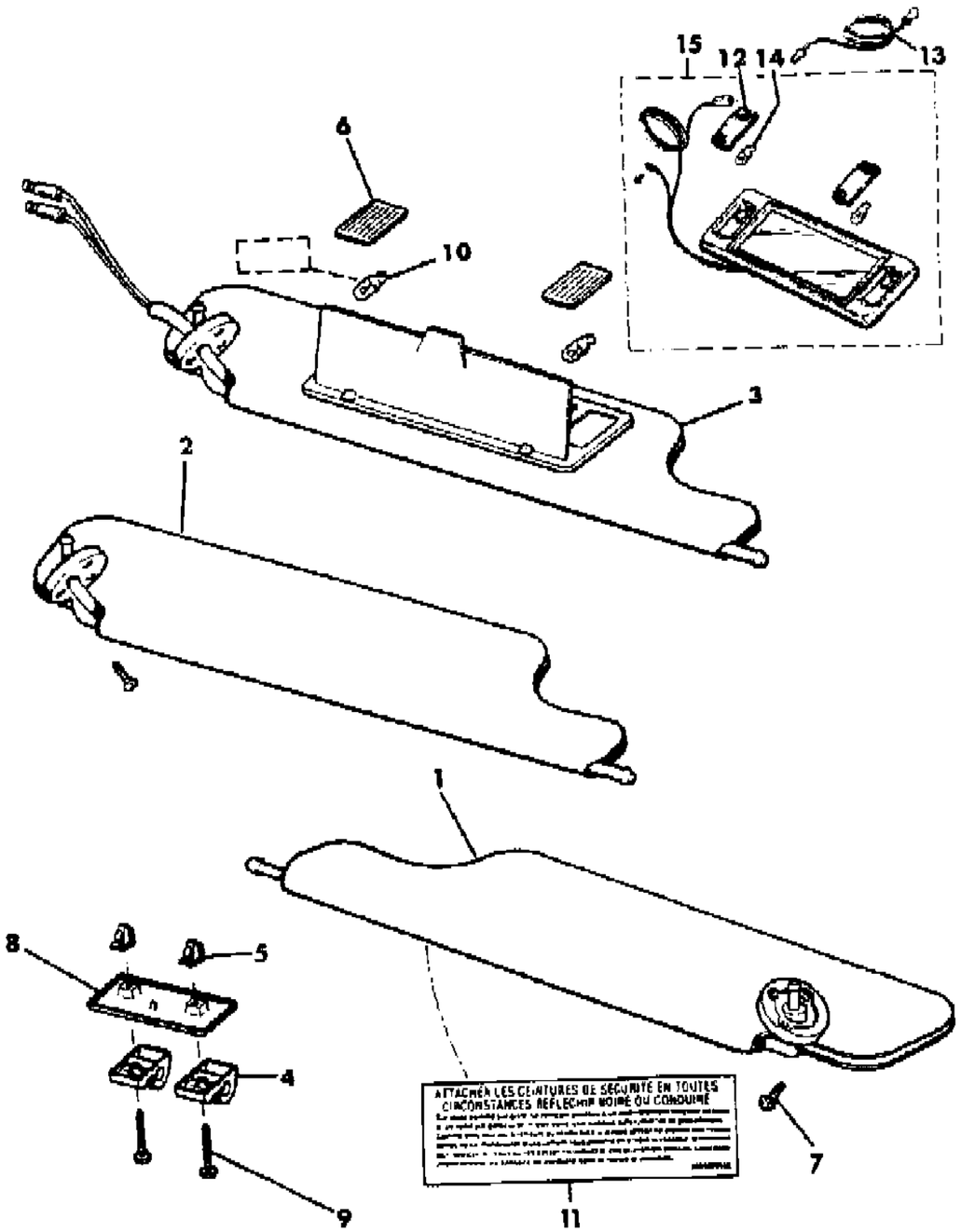

ITEM	PART NUMBER	QTY	BODY	MODEL	DESCRIPTION
	5500 8182	2			Med. Blue
	5501 5214	2			Cordovan
	5500 7720	2			Garnet
	5500 7721	2			Honey
	5501 5215	2			Tan
5	3420 2590	2			NUT
6	8350 0329	2			LENS, Light
7	1150 1150	6			SCREW
8	5500 6758	1			BEZEL, Visor Retainer, P.A.R.
9	3420 2589	2			SCREW
10	J812 5723	2			BULB, #74
11	5500 9558	1			LABEL, French, Canada
12	J812 8734	1			LENS, Light
13	8350 2952	2			TERMINAL ***
14	J400 3086	2			BULB
15	J576 5148	1			MIRROR, Vanity, P.A.R.

MODEL CODES
16=Cherokee 2 Dr.(1981-83)
17=Cherokee 2 Dr.(1981-83)
73=Cherokee 2WD-2 Dr.(1984-86)
74=Cherokee 2WD-4 Dr.(1984-86)
18=Cherokee 4 Dr.(1981-83)
77=Cherokee 4WD-2 Dr.(1984-86)
78=Cherokee 4WD-4 Dr.(1984-86)
85=CJ-5 (1981-83)
86=CJ-6(1981)
87=CJ-7(1981-86)
88=CJ-8, Scrambler(1981-86)
64=Comanche 2WD-6 Ft. Box(1986)
66=Comanche 2WD-7 Ft. Box(1986)
63=Comanche 4WD-6 Ft. Box(1986)
65=Comanche 4WD-7 Ft. Box(1986)
15=Grand Wagoneer 4 Dr.(1984-86)
25=J-10 Truck 7 Ft. Box(1981-84)
26=J10 Truck 8 Ft. Box(1981-86)
27=J-20 Truck 8 Ft. Box(1981-86)
15=Wagoneer 4 Dr.(1981-83)
75=Wagoneer 4WD-4 Dr.(1984-86)

BODY
CJ=CJ-5, CJ-6, CJ-7, CJ-8, Scrambler(1981-86)
MJ=Comanche Pickup(1986)

STYLES
SJ=Wagoneer(1981-83), Grand Wagoneer(1984-86), Cherokee(1981-83), J-10, J-20(1981-86)
XJ=Wagoneer(1984-86), Cherokee(1984-86)

AR = Use as Required - = Non Illustrated Part P.A.R. = Paint as Required

PANELS, INTERIOR TRIM, FRONT 2 DOOR XJ CHEROKEE
Figure 47-700

81J 047 700

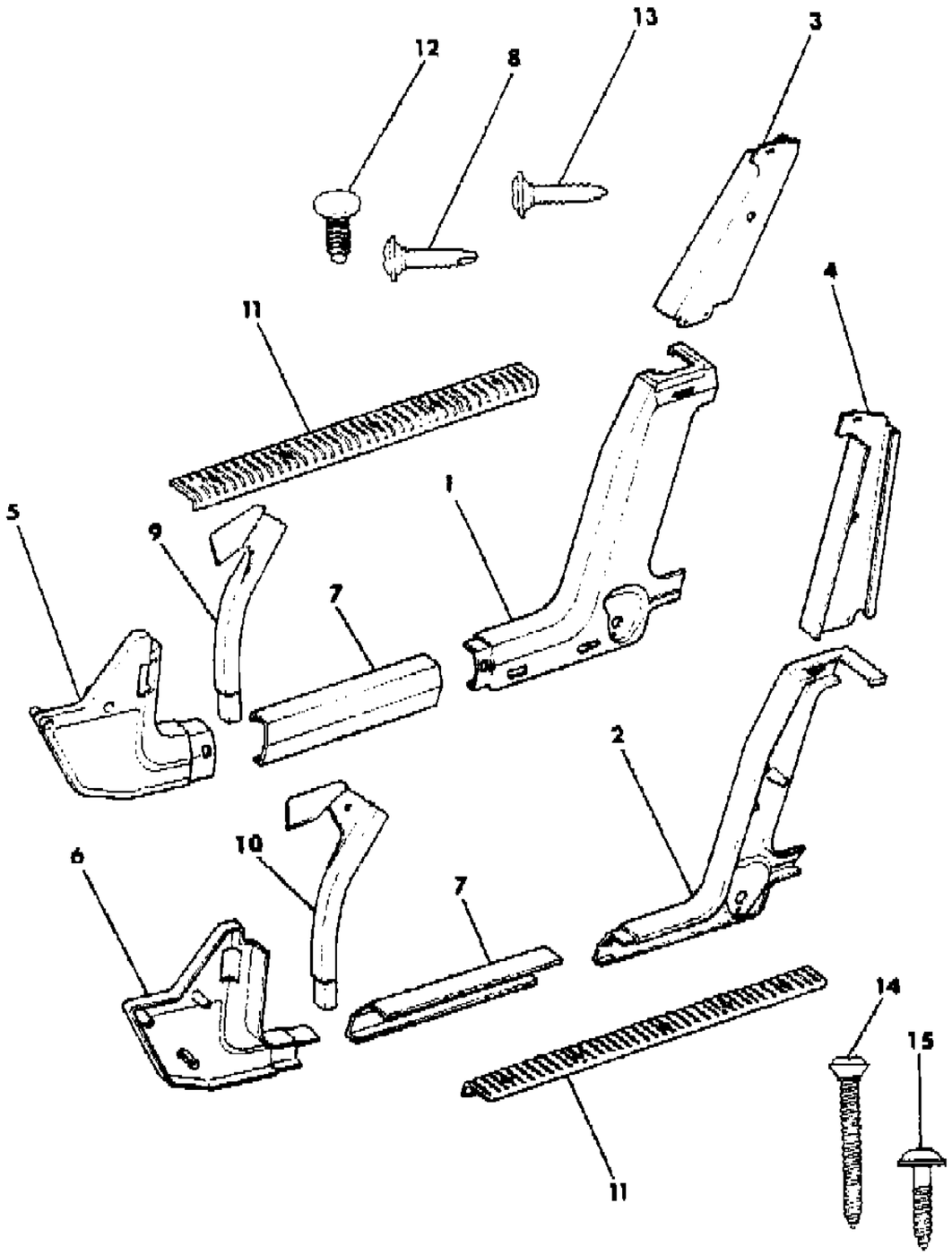

ITEM	PART NUMBER	QTY	BODY	MODEL	DESCRIPTION
1					PANEL, Quarter Trim
	5500 1662	1			Almond, 1984-85
	5500 8416	1			Med. Blue, 1984-85
	5500 1660	1			Slate Blue, 1984-85
	5500 1664	1			Garnet, 1984-85
	5500 5758	1			Honey, 1984-85
	5500 1666	1			Nutmeg, 1984-85
	5500 5758	1			P.A.R., 1986
2					PANEL, Quarter Trim
	5500 1663	1			Almond, 1984-85
	5500 8417	1			Med. Blue, 1984-85
	5500 1661	1			Slate Blue, 1984-85
	5500 1665	1			Garnet, 1984-85
	5500 5759	1			Honey, 1984-85
	5500 1667	1			Nutmeg, 1984-85
	5500 5759	1			P.A.R., 1986
3					COVER, Lock Pillar
	5500 3074	1			Almond, 1984-85
	5500 8438	1			Med. Blue, 1984-85
	5500 3072	1			Slate Blue, 1984-85
	5500 3076	1			Garnet, 1984-85
	5500 5766	1			Honey, 1984-85
	5500 3078	1			Nutmeg, 1984-85
	5500 5766	1			P.A.R., 1986
4					COVER, Lock Pillar
	5500 3075	1			Almond, 1984-85
	5500 8439	1			Med. Blue, 1984-85
	5500 3073	1			Slate Blue, 1984-85
	5500 3077	1			Garnet, 1984-85
	5500 5767	1			Honey, 1984-85
	5500 3079	1			Nutmeg, 1984-85
	5500 5767	1			P.A.R., 1986
5					PANEL, Cowl Trim
	5500 1542	1			Almond, 1984-85
	5500 7236	1			Med. Blue, 1984-85
	5500 1544	1			Slate Blue, 1984-85
	5500 1548	1			Garnet, 1984-85
	5500 6082	1			Honey, 1984-85
	5500 1546	1			Nutmeg, 1984-85

MODEL CODES

16=Cherokee 2 Dr.(1981-83)	78=Cherokee 4WD-4 Dr.(1984-86)	64=Comanche 2WD-6 Ft. Box(1986)	25=J-10 Truck 7 Ft. Box(1981-84)
17=Cherokee 2 Dr.(1981-83)	85=CJ-5 (1981-83)	66=Comanche 2WD-7 Ft. Box(1986)	26=J10 Truck 8 Ft. Box(1981-86)
73=Cherokee 2WD-2 Dr.(1984-86)	86=CJ-6(1981)	63=Comanche 4WD-6 Ft. Box(1986)	27=J-20 Truck 8 Ft. Box(1981-86)
74=Cherokee 2WD-4 Dr.(1984-86)	87=CJ-7(1981-86)	65=Comanche 4WD-7 Ft. Box(1986)	15=Wagoneer 4 Dr.(1981-83)
18=Cherokee 4 Dr.(1981-83)	88=CJ-8, Scrambler(1981-86)	15=Grand Wagoneer 4 Dr.(1984-86)	75=Wagoneer 4WD-4 Dr.(1984-86)
77=Cherokee 4WD-2 Dr.(1984-86)			

BODY
CJ=CJ-5, CJ-6, CJ-7, CJ-8, Scrambler(1981-86)
MJ=Comanche Pickup(1986)

STYLES
SJ=Wagoneer(1981-83), Grand Wagoneer(1984-86), Cherokee(1981-83), J-10, J-20(1981-86)
XJ=Wagoneer(1984-86), Cherokee(1984-86)

AR = Use as Required - = Non Illustrated Part P.A.R. = Paint as Required

PANELS, INTERIOR TRIM, FRONT 2 DOOR XJ CHEROKEE
Figure 47-700

81J 047 700

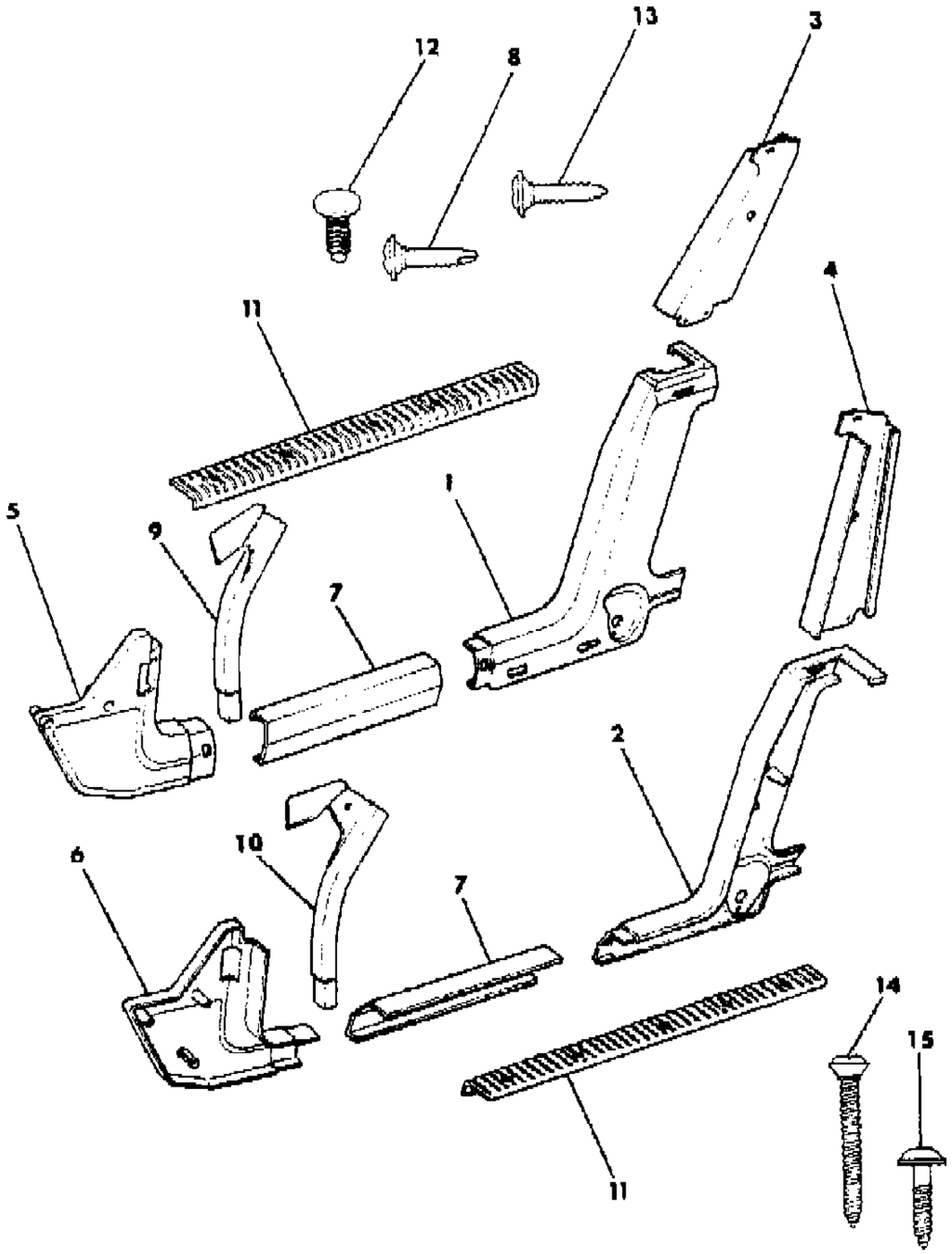

ITEM	PART NUMBER	QTY	BODY	MODEL	DESCRIPTION
	5500 6082	1			P.A.R., 1986
6					PANEL, Cowl Trim
	5500 1543	1			Almond, 1984-85
	5500 7237	1			Med. Blue, 1984-85
	5500 1545	1			Slate Blue, 1984-85
	5500 1549	1			Garnet, 1984-85
	5500 6083	1			Honey, 1984-85
	5500 1547	1			Nutmeg, 1984-85
	5500 6083	1			P.A.R., 1986
7					PLATE, Inner Scuff
	5500 2222	2			Almond, 1984-85
	5500 8704	2			Black, 1986
	5500 8705	2			Med. Blue, 1984-86
	5500 2223	2			Slate Blue, 1984-85
	5501 3588	2			Cordovan, 1986
	5500 2225	2			Garnet, 1984-86
	5500 6093	2			Honey, 1984-86
	5500 2224	2			Nutmeg, 1984-85
	5501 1558	2			Tan, 1986
8	3420 1398	6			SCREW
9	5500 4466	1			FILLER, Pillar, P.A.R.
10	5500 4467	1			FILLER, Pillar, P.A.R.
11	5500 3374	2			PLATE, Outer Scuff
12	3420 1545	6			CLIP, Push
13	3420 1413	10			SCREW
14	3420 1593	8			SCREW
15	3420 1468	4			SCREW

MODEL CODES

16=Cherokee 2 Dr.(1981-83)	78=Cherokee 4WD-4 Dr.(1984-86)	64=Comanche 2WD-6 Ft. Box(1986)	25=J-10 Truck 7 Ft. Box(1981-84)
17=Cherokee 2 Dr.(1981-83)	85=CJ-5 (1981-83)	66=Comanche 2WD-7 Ft. Box(1986)	26=J10 Truck 8 Ft. Box(1981-86)
73=Cherokee 2WD-2 Dr.(1984-86)	86=CJ-6(1981)	63=Comanche 4WD-6 Ft. Box(1986)	27=J-20 Truck 8 Ft. Box(1981-86)
74=Cherokee 2WD-4 Dr.(1984-86)	87=CJ-7(1981-86)	65=Comanche 4WD-7 Ft. Box(1986)	15=Wagoneer 4 Dr.(1981-83)
18=Cherokee 4 Dr.(1981-83)	88=CJ-8, Scrambler(1981-86)	15=Grand Wagoneer 4 Dr.(1984-86)	75=Wagoneer 4WD-4 Dr.(1984-86)
77=Cherokee 4WD-2 Dr.(1984-86)			

BODY
CJ=CJ-5, CJ-6, CJ-7, CJ-8, Scrambler(1981-86)
MJ=Comanche Pickup(1986)

STYLES
SJ=Wagoneer(1981-83), Grand Wagoneer(1984-86), Cherokee(1981-83), J-10, J-20(1981-86)
XJ=Wagoneer(1984-86), Cherokee(1984-86)

AR = Use as Required - = Non Illustrated Part P.A.R. = Paint as Required

« RETURN TO GROUP INDEX

PANELS, INTERIOR TRIM, REAR 2 DOOR XJ CHEROKEE
Figure 47-800

81J 047 800

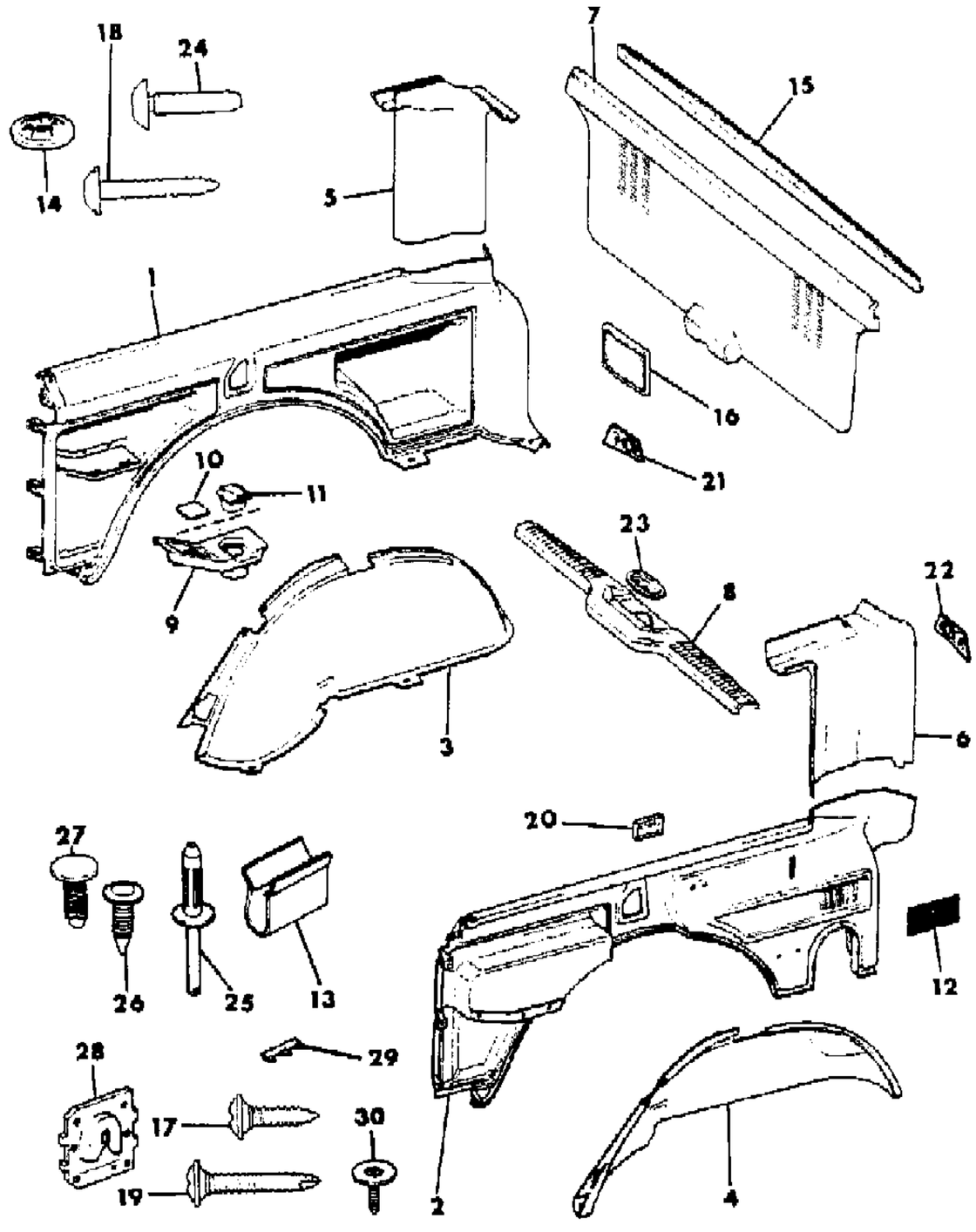

ITEM	PART NUMBER	QTY	BODY	MODEL	DESCRIPTION
1					PANEL, Quarter Trim
	5500 2412	1			Almond, 1984
	5500 8310	1			Almond, 1985
	5500 8400	1			Med. Blue, 1984-85
	5500 2410	1			Slate Blue, 1984
	5500 8308	1			Slate Blue, 1985
	5500 2414	1			Garnet, 1984
	5500 8312	1			Garnet, 1985
	5500 5750	1			Honey, 1984
	5500 8314	1			Honey, 1985
	5500 2416	1			Nutmeg
	5500 8314	1			P.A.R., 1986
2					PANEL, Quarter Trim
	5500 2413	1			Almond, 1984
	5500 8311	1			Almond, 1985
	5500 8401	1			Med. Blue, 1984-85
	5500 2411	1			Slate Blue, 1984
	5500 8309	1			Slate Blue, 1985
	5500 2415	1			Garnet, 1984
	5500 8313	1			Garnet, 1985
	5500 5751	1			Honey, 1984
	5500 8315	1			Honey, 1985
	5500 2417	1			Nutmeg
	5500 8315	1			P.A.R., 1986
3					COVER, Wheelhouse
	5500 2292	1			Almond, 1984-85
	5500 2290	1			Slate Blue, 1984-85
	5500 8426	1			P.A.R., 1986
4					COVER, Wheelhouse
	5500 2293	1			Almond, 1984-85
	5500 2291	1			Slate Blue, 1984-85
	5500 8427	1			P.A.R., 1986
5					COVER, Lift Door Pillar
	5500 3090	1			Almond, 1984-85
	5500 8450	1			Med. Blue, 1984-85
	5500 3088	1			Slate Blue, 1984-85
	5500 3092	1			Garnet, 1984-85
	5500 5774	1			Honey, 1984-85
	5500 3094	1			Nutmeg, 1984-85

MODEL CODES

16=Cherokee 2 Dr.(1981-83)
17=Cherokee 2 Dr.(1981-83)
73=Cherokee 2WD-2 Dr.(1984-86)
74=Cherokee 2WD-4 Dr.(1984-86)
18=Cherokee 4 Dr.(1981-83)
77=Cherokee 4WD-2 Dr.(1984-86)
78=Cherokee 4WD-4 Dr.(1984-86)
85=CJ-5 (1981-83)
86=CJ-6(1981)
87=CJ-7(1981-86)
88=CJ-8, Scrambler(1981-86)
64=Comanche 2WD-6 Ft. Box(1986)
66=Comanche 2WD-7 Ft. Box(1986)
63=Comanche 4WD-6 Ft. Box(1986)
65=Comanche 4WD-7 Ft. Box(1986)
15=Grand Wagoneer 4 Dr.(1984-86)
25=J-10 Truck 7 Ft. Box(1981-84)
26=J10 Truck 8 Ft. Box(1981-86)
27=J-20 Truck 8 Ft. Box(1981-86)
15=Wagoneer 4 Dr.(1981-83)
75=Wagoneer 4WD-4 Dr.(1984-86)

BODY
CJ=CJ-5, CJ-6, CJ-7, CJ-8, Scrambler(1981-86)
MJ=Comanche Pickup(1986)

STYLES
SJ=Wagoneer(1981-83), Grand Wagoneer(1984-86), Cherokee(1981-83), J-10, J-20(1981-86)
XJ=Wagoneer(1984-86), Cherokee(1984-86)

AR = Use as Required - = Non Illustrated Part P.A.R. = Paint as Required

PANELS, INTERIOR TRIM, REAR 2 DOOR XJ CHEROKEE
Figure 47-800

81J 047 800

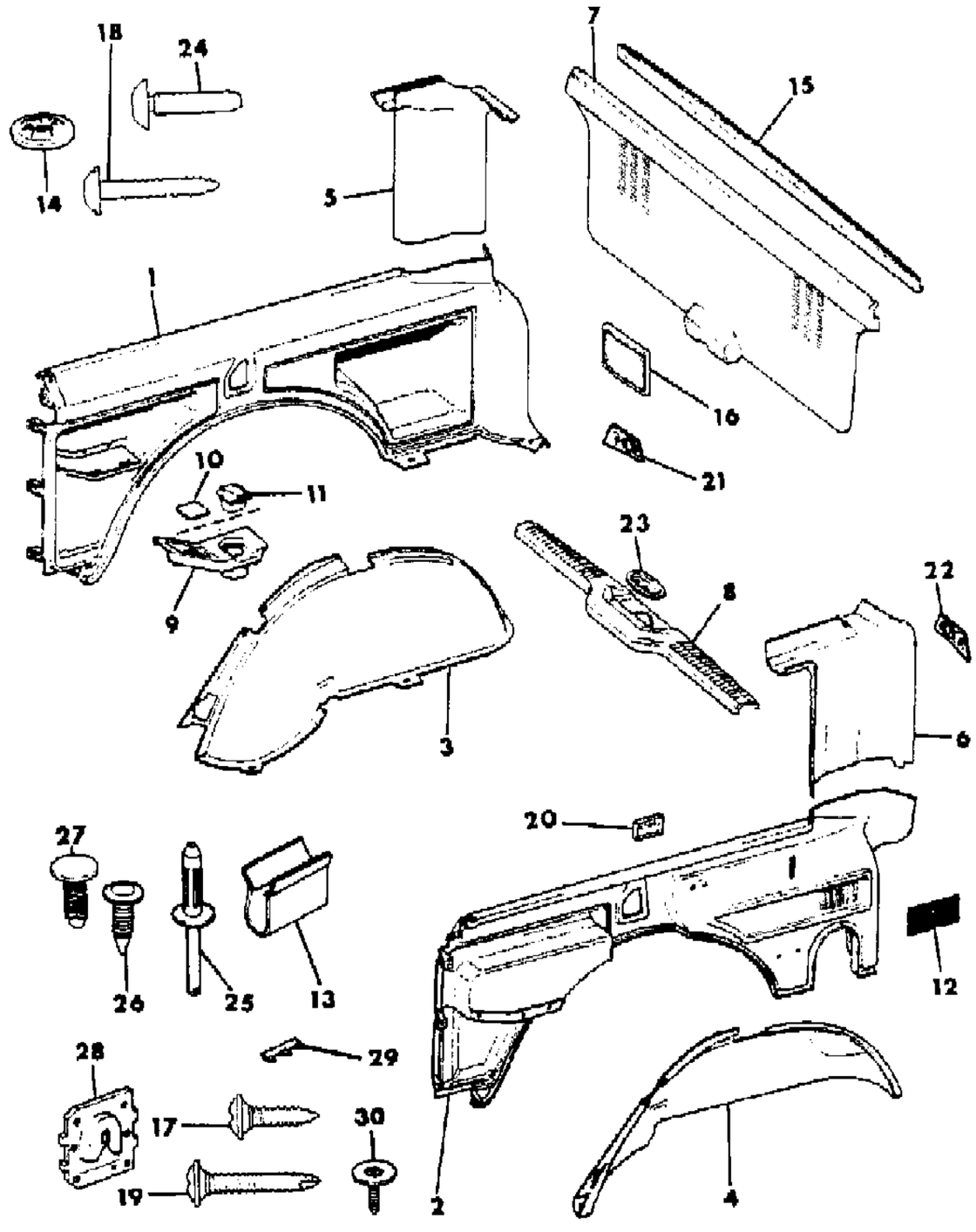

ITEM	PART NUMBER	QTY	BODY	MODEL	DESCRIPTION
	5500 5774	1			P.A.R., 1986
6					COVER, Lift Door Pillar
	5500 3091	1			Almond, 1984-85
	5500 8451	1			Med. Blue, 1984-85
	5500 3089	1			Slate Blue, 1984-85
	5500 3093	1			Garnet, 1984-85
	5500 5775	1			Honey, 1984-85
	5500 3095	1			Nutmeg, 1984-85
	5500 5775	1			P.A.R., 1986
7					PANEL, Lift Door Trim
	5500 6605	1			Almond, Base Model, 1984-85
	5500 1941	1			Almond, w/o Base Model, 1984-85
	5501 0187	1			Black, Base Model, 1986
	5501 0190	1			Black, w/o Base Model, 1986
	5501 0189	1			Med. Blue, 1984-86
	5500 6604	1			Slate Blue, Base Model, 1984-85
	5500 1940	1			Slate Blue, w/o Base Model, 1984-85
	5501 1814	1			Cordovan, 1986
	5500 1942	1			Garnet, 1984-85
	5501 0185	1			Garnet, 1986
	5500 5787	1			Honey, 1984-85
	5501 0188	1			Honey, Base Model, 1986
	5501 0186	1			Honey, w/o Base Model, 1986
	5500 1943	1			Nutmeg, 1984-85
	5501 1813	1			Tan, Base Model, 1986
	5501 1815	1			Tan, w/o Base Model, 1986
8					PLATE, Lift Door Scuff
	5500 1769	1			Almond, 1984-85
	5500 8462	1			Med. Blue, 1984-85
	5500 1768	1			Slate Blue, 1984-85
	5500 1770	1			Garnet, 1984-85
	5500 5757	1			Honey, 1984-85
	5500 1771	1			Nutmeg, 1984-85
	5500 5757	1			P.A.R., 1986
9					COVER, Armrest
					Right
	5500 3786	1			Almond, 1984-85
	5500 8408	1			Med. Blue, 1984-85
	5500 3784	1			Slate Blue, 19845-85

MODEL CODES

16=Cherokee 2 Dr.(1981-83)	78=Cherokee 4WD-4 Dr.(1984-86)	64=Comanche 2WD-6 Ft. Box(1986)	25=J-10 Truck 7 Ft. Box(1981-84)
17=Cherokee 2 Dr.(1981-83)	85=CJ-5 (1981-83)	66=Comanche 2WD-7 Ft. Box(1986)	26=J10 Truck 8 Ft. Box(1981-86)
73=Cherokee 2WD-2 Dr.(1984-86)	86=CJ-6(1981)	63=Comanche 4WD-6 Ft. Box(1986)	27=J-20 Truck 8 Ft. Box(1981-86)
74=Cherokee 2WD-4 Dr.(1984-86)	87=CJ-7(1981-86)	65=Comanche 4WD-7 Ft. Box(1986)	15=Wagoneer 4 Dr.(1981-83)
18=Cherokee 4 Dr.(1981-83)	88=CJ-8, Scrambler(1981-86)	15=Grand Wagoneer 4 Dr.(1984-86)	75=Wagoneer 4WD-4 Dr.(1984-86)
77=Cherokee 4WD-2 Dr.(1984-86)			

BODY
CJ=CJ-5, CJ-6, CJ-7, CJ-8, Scrambler(1981-86)
MJ=Comanche Pickup(1986)

STYLES
SJ=Wagoneer(1981-83), Grand Wagoneer(1984-86), Cherokee(1981-83), J-10, J-20(1981-86)
XJ=Wagoneer(1984-86), Cherokee(1984-86)

AR = Use as Required - = Non Illustrated Part P.A.R. = Paint as Required

PANELS, INTERIOR TRIM, REAR 2 DOOR XJ CHEROKEE
Figure 47-800

81J 047 800

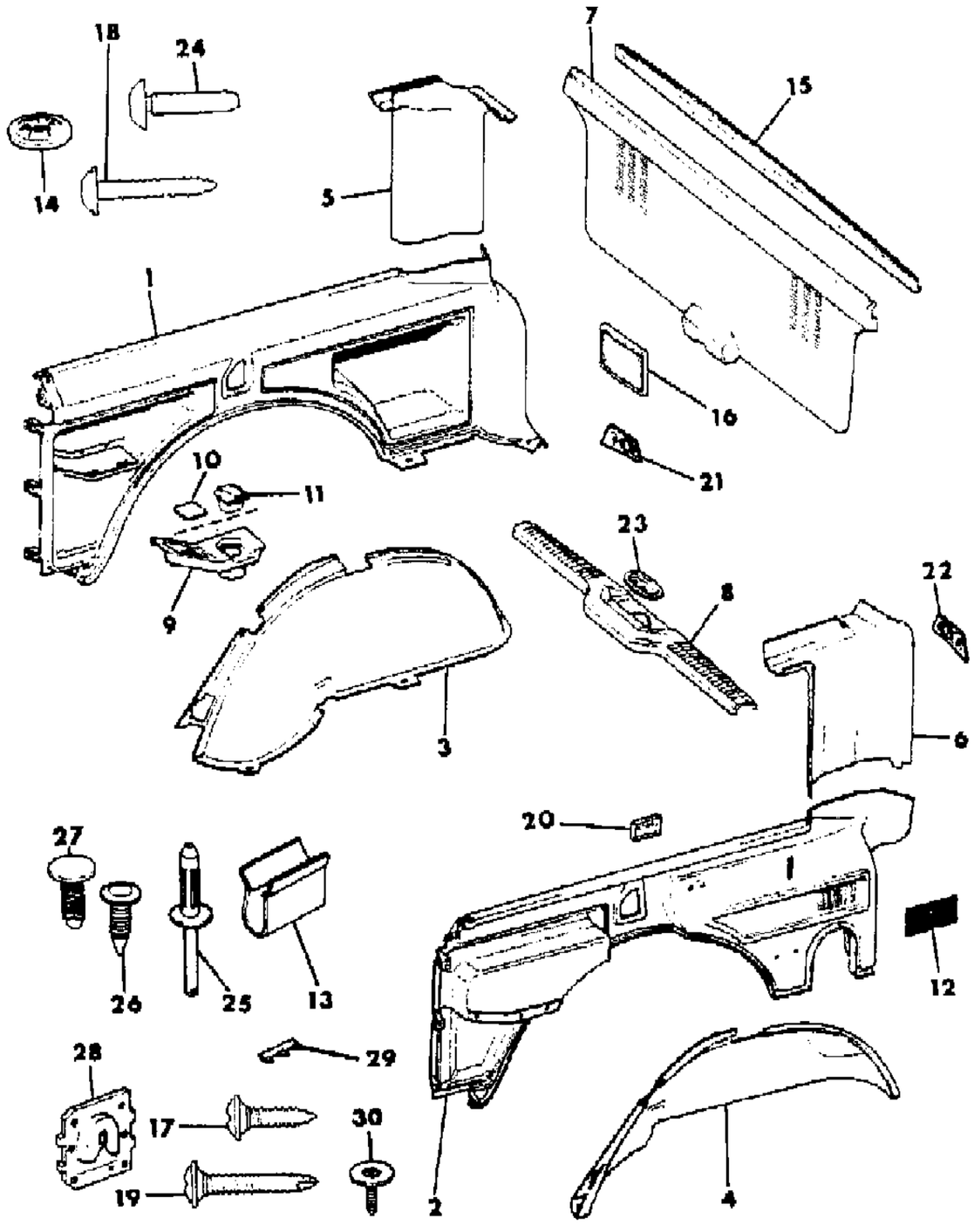

ITEM	PART NUMBER	QTY	BODY	MODEL	DESCRIPTION
	5500 3788	1			Garnet, 1984-85
	5500 5754	1			Honey, 1984-85
	5500 3790	1			Nutmeg, 1984-85
	5500 5754	1			P.A.R., 1986
					Left
	5500 3787	1			Almond, 1984-85
	5500 8409	1			Med. Blue, 1984-85
	5500 3785	1			Slate Blue, 1984-85
	5500 3789	1			Garnet, 1984-85
	5500 5755	1			Honey, 1984-85
	5500 3791	1			Nutmeg, 1984-85
	5500 5755	1			P.A.R., 1986
10	5500 2287	2			COVER, Ash Tray, P.A.R.
11	5500 3505	2			ASH TRAY, P.A.R. ***
12	5500 4406	1			SCREEN, Louver
13	J400 1551	12			CLIP
14	3420 1481	12			NUT, Push
15	5500 8064	1			RETAINER
16					GRILLE, Speaker, 1986
	3501 4012	2			Black
	3501 4000	2			Med. Blue
	3501 6858	2			Cordovan
	3501 4002	2			Garnet
	3501 4013	2			Honey
	3501 4001	2			Tan
17					SCREW
	3420 1403	2			13mm
	3420 1719	4			16mm
	3420 1400	2			40mm
18	3420 1468	10			SCREW
19	3420 1398	6			SCREW
20					PAD, Spare Tire Rest
	5500 3745	1			Almond, 1984-85
	5500 8414	1			Med. Blue, 1984-85
	5500 3744	1			Slate Blue, 1984-85
	5500 3746	1			Garnet, 1984-85
	5500 5756	1			Honey, 1984-85
	5500 3747	1			Nutmeg, 1984-85
21	5500 5230	1			COVER, Rear Header

MODEL CODES

16=Cherokee 2 Dr.(1981-83)
17=Cherokee 2 Dr.(1981-83)
73=Cherokee 2WD-2 Dr.(1984-86)
74=Cherokee 2WD-4 Dr.(1984-86)
18=Cherokee 4 Dr.(1981-83)
77=Cherokee 4WD-2 Dr.(1984-86)
78=Cherokee 4WD-4 Dr.(1984-86)
85=CJ-5 (1981-83)
86=CJ-6(1981)
87=CJ-7(1981-86)
88=CJ-8, Scrambler(1981-86)
64=Comanche 2WD-6 Ft. Box(1986)
66=Comanche 2WD-7 Ft. Box(1986)
63=Comanche 4WD-6 Ft. Box(1986)
65=Comanche 4WD-7 Ft. Box(1986)
15=Grand Wagoneer 4 Dr.(1984-86)
25=J-10 Truck 7 Ft. Box(1981-84)
26=J10 Truck 8 Ft. Box(1981-86)
27=J-20 Truck 8 Ft. Box(1981-86)
15=Wagoneer 4 Dr.(1981-83)
75=Wagoneer 4WD-4 Dr.(1984-86)

BODY
CJ=CJ-5, CJ-6, CJ-7, CJ-8, Scrambler(1981-86)
MJ=Comanche Pickup(1986)

STYLES
SJ=Wagoneer(1981-83), Grand Wagoneer(1984-86), Cherokee(1981-83), J-10, J-20(1981-86)
XJ=Wagoneer(1984-86), Cherokee(1984-86)

AR = Use as Required - = Non Illustrated Part P.A.R. = Paint as Required

PANELS, INTERIOR TRIM, REAR 2 DOOR XJ CHEROKEE
Figure 47-800

81J 047 800

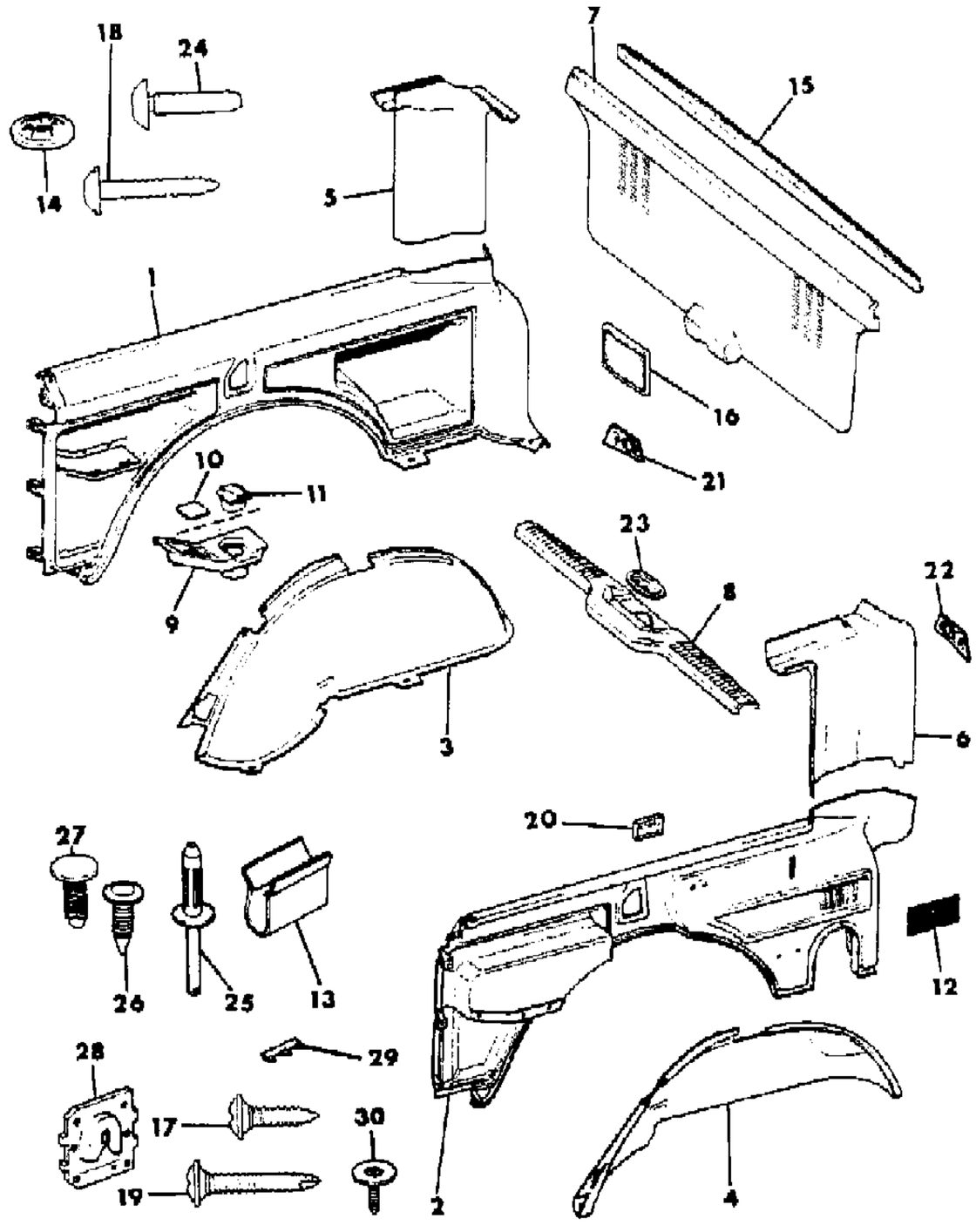

ITEM	PART NUMBER	QTY	BODY	MODEL	DESCRIPTION
22	5500 5231	1			COVER, Rear Header
23	5500 4352	1			RETAINER, Scuff Plate
24	3420 1946	4			SCREW
25	3420 1835	7			RIVET, P.A.R.
26					FASTENER
	J400 7130	AR			Almond, 1984-85
	J400 7374	AR			Med. Blue, 1984-85
	J400 6969	AR			Slate Blue, 1984-85
	J400 7168	AR			Garnet, 1984-85
	J400 7129	AR			Honey, 1984-85
	J400 6967	AR			Nutmeg, 1984-85
	J400 7129	AR			P.A.R., 1986
27	3420 1545	14			CLIP
28	3420 1299	14			RETAINER, Clip
29	5500 5494	1			RETAINER, Trim Panel
30	3420 2419	8			SCREW

MODEL CODES

16=Cherokee 2 Dr.(1981-83)
17=Cherokee 2 Dr.(1981-83)
73=Cherokee 2WD-2 Dr.(1984-86)
74=Cherokee 2WD-4 Dr.(1984-86)
18=Cherokee 4 Dr.(1981-83)
77=Cherokee 4WD-2 Dr.(1984-86)
78=Cherokee 4WD-4 Dr.(1984-86)
85=CJ-5 (1981-83)
86=CJ-6(1981)
87=CJ-7(1981-86)
88=CJ-8, Scrambler(1981-86)
64=Comanche 2WD-6 Ft. Box(1986)
66=Comanche 2WD-7 Ft. Box(1986)
63=Comanche 4WD-6 Ft. Box(1986)
65=Comanche 4WD-7 Ft. Box(1986)
15=Grand Wagoneer 4 Dr.(1984-86)
25=J-10 Truck 7 Ft. Box(1981-84)
26=J10 Truck 8 Ft. Box(1981-86)
27=J-20 Truck 8 Ft. Box(1981-86)
15=Wagoneer 4 Dr.(1981-83)
75=Wagoneer 4WD-4 Dr.(1984-86)

BODY
CJ=CJ-5, CJ-6, CJ-7, CJ-8, Scrambler(1981-86)
MJ=Comanche Pickup(1986)

STYLES
SJ=Wagoneer(1981-83), Grand Wagoneer(1984-86), Cherokee(1981-83), J-10, J-20(1981-86)
XJ=Wagoneer(1984-86), Cherokee(1984-86)

AR = Use as Required - = Non Illustrated Part P.A.R. = Paint as Required

« RETURN TO GROUP INDEX

PANELS, INTERIOR TRIM, REAR COMANCHE
Figure 47-900

81J 047 900

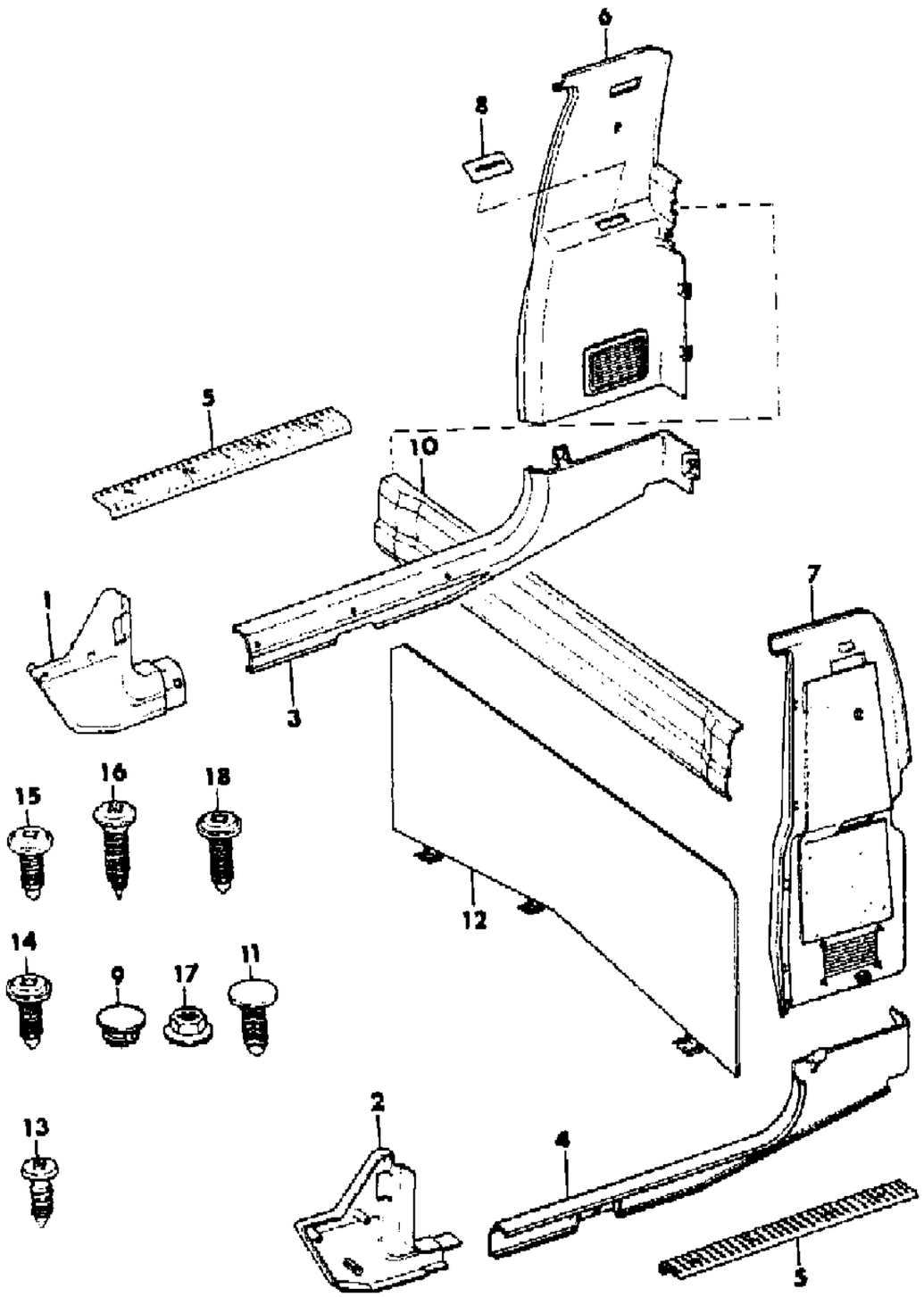

ITEM	PART NUMBER	QTY	BODY	MODEL	DESCRIPTION
1					PANEL, Cowl Trim
	5500 6082	1			P.A.R.
2					PANEL, Cowl Trim
	5500 7233	1			P.A.R.
3					PLATE, Inner Scuff
	5500 6442	1			Black
	5500 6440	1			Blue
	5501 1560	1			Cordovan
	5500 6444	1			Garnet
	5500 6446	1			Honey
	5501 1562	1			Tan
4					PLATE, Inner Scuff
	5500 6443	1			Black
	5500 6441	1			Blue
	5501 1561	1			Cordovan
	5500 6445	1			Garnet
	5500 6447	1			Honey
	5501 1563	1			Tan
5	5500 3370	2			PLATE, Outer Scuff
6	5500 8326	1			PANEL, Quarter Trim
7	5500 8327	1			PANEL, Quarter Trim
8	5500 8299	2			ESCUTCHEON, Seat Belt, P.A.R.
9	3420 2160	2			PLUG, Button, P.A.R.
10	5500 6375	1			PANEL, Center Trim Upper, P.A.R.
11	3420 1545	7			CLIP
12					PANEL, Center Trim Lower
					Carpet
	5500 7527	1			Black
	5500 7526	1			Med. Blue
	5501 1790	1			Cordovan
	5500 7528	1			Garnet
	5500 7529	1			Honey
	5501 1791	1			Tan
					Vinyl
	5500 7531	1			Black
	5500 7530	1			Blue
	5500 7532	1			Garnet
	5500 7533	1			Honey
13					SCREW

MODEL CODES

16=Cherokee 2 Dr.(1981-83)
17=Cherokee 2 Dr.(1981-83)
73=Cherokee 2WD-2 Dr.(1984-86)
74=Cherokee 2WD-4 Dr.(1984-86)
18=Cherokee 4 Dr.(1981-83)
77=Cherokee 4WD-2 Dr.(1984-86)
78=Cherokee 4WD-4 Dr.(1984-86)
85=CJ-5 (1981-83)
86=CJ-6(1981)
87=CJ-7(1981-86)
88=CJ-8, Scrambler(1981-86)
64=Comanche 2WD-6 Ft. Box(1986)
66=Comanche 2WD-7 Ft. Box(1986)
63=Comanche 4WD-6 Ft. Box(1986)
65=Comanche 4WD-7 Ft. Box(1986)
15=Grand Wagoneer 4 Dr.(1984-86)
25=J-10 Truck 7 Ft. Box(1981-84)
26=J10 Truck 8 Ft. Box(1981-86)
27=J-20 Truck 8 Ft. Box(1981-86)
15=Wagoneer 4 Dr.(1981-83)
75=Wagoneer 4WD-4 Dr.(1984-86)

BODY
CJ=CJ-5, CJ-6, CJ-7, CJ-8, Scrambler(1981-86)
MJ=Comanche Pickup(1986)

STYLES
SJ=Wagoneer(1981-83), Grand Wagoneer(1984-86), Cherokee(1981-83), J-10, J-20(1981-86)
XJ=Wagoneer(1984-86), Cherokee(1984-86)

AR = Use as Required - = Non Illustrated Part P.A.R. = Paint as Required

« RETURN TO GROUP INDEX »

PANELS, INTERIOR TRIM, REAR COMANCHE
Figure 47-900

81J 047 900

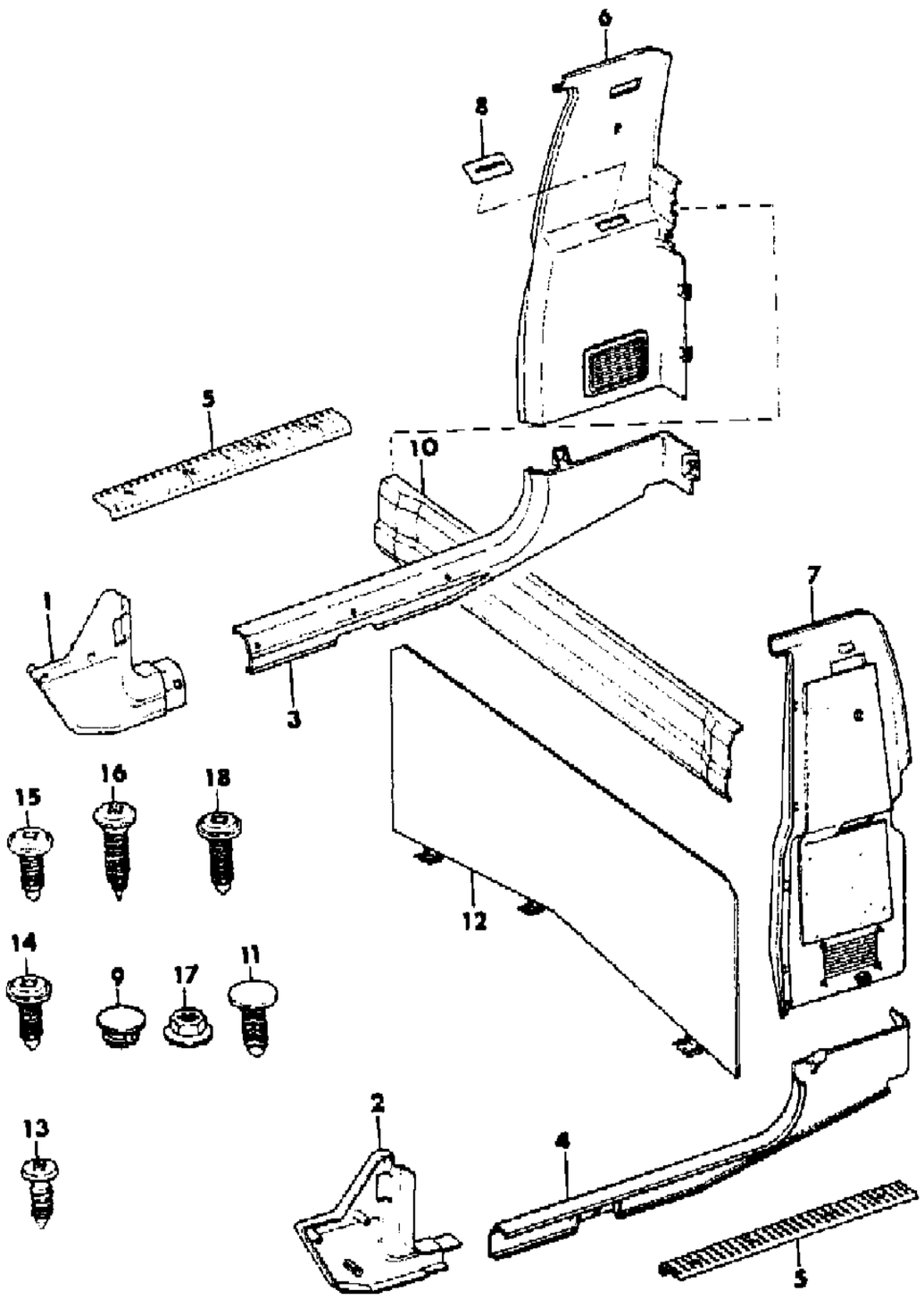

ITEM	PART NUMBER	QTY	BODY	MODEL	DESCRIPTION
	1150 1610	5			16mm
14					SCREW
	3420 1403	8			13mm
15					SCREW
	3420 1314	2			13mm
16					SCREW
	3420 1400	6			40mm
17	1150 1932	2			NUT
18					SCREW
	3420 1468	2			25mm

MODEL CODES

16=Cherokee 2 Dr.(1981-83)
17=Cherokee 2 Dr.(1981-83)
73=Cherokee 2WD-2 Dr.(1984-86)
74=Cherokee 2WD-4 Dr.(1984-86)
18=Cherokee 4 Dr.(1981-83)
77=Cherokee 4WD-2 Dr.(1984-86)
78=Cherokee 4WD-4 Dr.(1984-86)
85=CJ-5 (1981-83)
86=CJ-6(1981)
87=CJ-7(1981-86)
88=CJ-8, Scrambler(1981-86)
64=Comanche 2WD-6 Ft. Box(1986)
66=Comanche 2WD-7 Ft. Box(1986)
63=Comanche 4WD-6 Ft. Box(1986)
65=Comanche 4WD-7 Ft. Box(1986)
15=Grand Wagoneer 4 Dr.(1984-86)
25=J-10 Truck 7 Ft. Box(1981-84)
26=J10 Truck 8 Ft. Box(1981-86)
27=J-20 Truck 8 Ft. Box(1981-86)
15=Wagoneer 4 Dr.(1981-83)
75=Wagoneer 4WD-4 Dr.(1984-86)

BODY
CJ=CJ-5, CJ-6, CJ-7, CJ-8, Scrambler(1981-86)
MJ=Comanche Pickup(1986)

STYLES
SJ=Wagoneer(1981-83), Grand Wagoneer(1984-86), Cherokee(1981-83), J-10, J-20(1981-86)
XJ=Wagoneer(1984-86), Cherokee(1984-86)

AR = Use as Required - = Non Illustrated Part P.A.R. = Paint as Required

« RETURN TO GROUP INDEX

PANELS, INTERIOR TRIM, FRONT 4 DOOR XJ CHEROKEE, XJ WAGONEER
Figure 47-1000

81J 047 1000

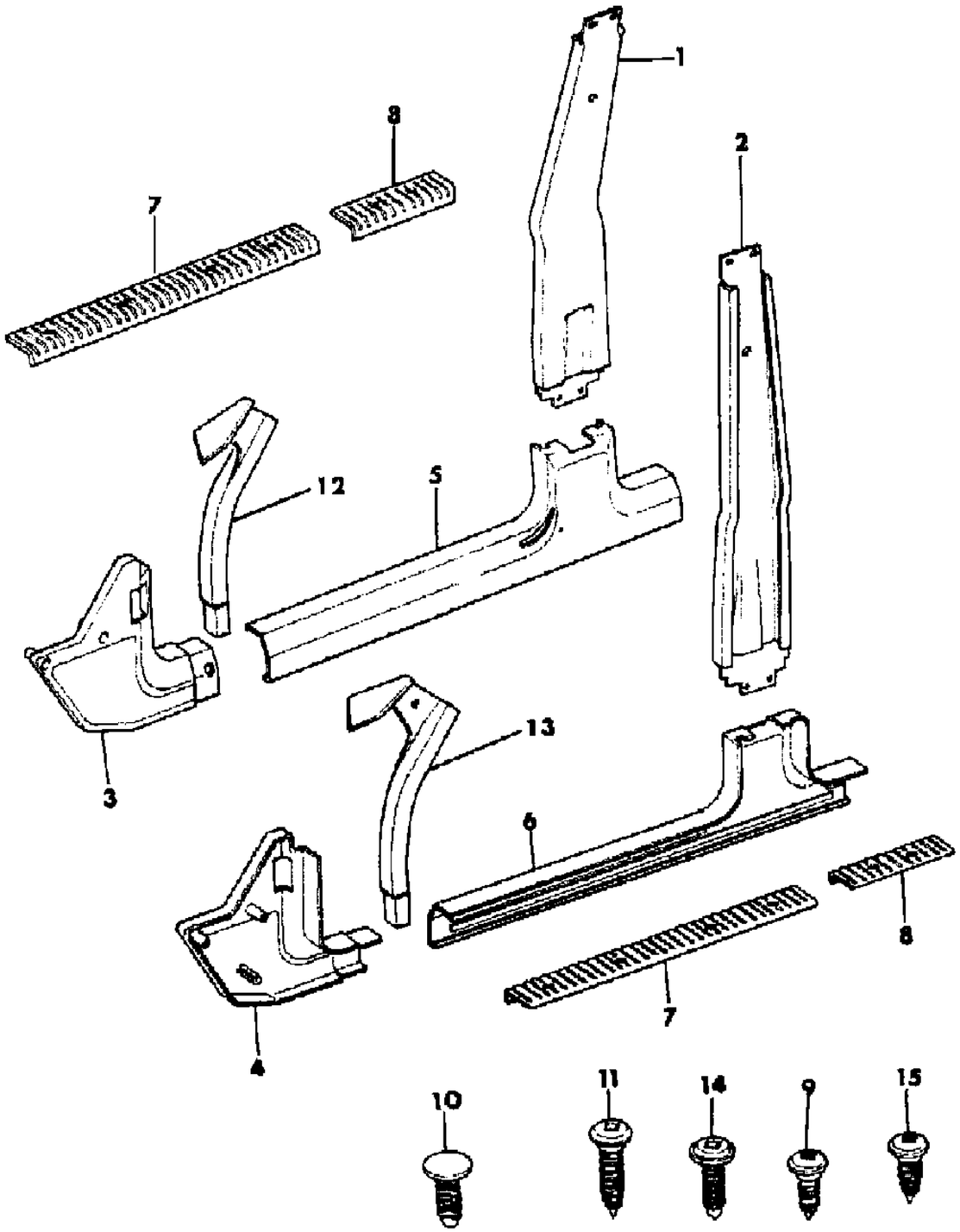

ITEM	PART NUMBER	QTY	BODY	MODEL	DESCRIPTION
1					PANEL, Center Trim, Upper
	5500 6654	1			Almond, 1984-85
	5500 8434	1			Med. Blue, 1984-85
	5500 6652	1			Slate Blue, 1984-85
	5500 6656	1			Garnet, 1984-85
	5500 5764	1			Honey, 1984-85
	5500 3030	1			Nutmeg, 1984-85
	5500 5764	1			P.A.R., 1986
2					PANEL, Center Trim Upper
	5500 6655	1			Almond, 1984-85
	5500 8435	1			Med. Blue, 1984-85
	5500 8435	1			Slate Blue, 1984-85
	5500 6653	1			Garnett, 1984-85
	5500 5765	1			Honey, 1984-85
	5500 3031	1			Nutmeg, 1984-85
	5500 5765	1			P.A.R., 1986
3					PANEL, Cowl Trim
	5500 1542	1			Almond, 1984-85
	5500 7236	1			Med. Blue, 1984-85
	5500 1544	1			Slate Blue, 1984-85
	5500 1548	1			Garnet, 1984-85
	5500 6082	1			Honey, 1984-85
	5500 1546	1			Nutmeg, 1984-85
	5500 6082	1			P.A.R, 1986
4					PANEL, Cowl Trim
	5500 1543	1			Almond, 1984-85
	5500 7237	1			Med. Blue, 1984-85
	5500 1545	1			Slate Blue, 1984-85
	5500 1549	1			Garnet, 1984-85
	5500 6083	1			Honey, 1984-85
	5500 1547	1			Nutmeg, 1984-85
	5500 6083	1			P.A.R., 1986
5					PANEL, Center Trim Lower
	5500 1714	1			Almond, 1984-85
	5500 8430	1			Med. Blue, 1984-85
	5500 1712	1			Slate Blue, 1984-85
	5500 1716	1			Garnet,1984-85
	5500 5762	1			Honey, 1984-85
	5500 1718	1			Nutmeg, 1984-85

MODEL CODES

16=Cherokee 2 Dr.(1981-83)
17=Cherokee 2 Dr.(1981-83)
73=Cherokee 2WD-2 Dr.(1984-86)
74=Cherokee 2WD-4 Dr.(1984-86)
18=Cherokee 4 Dr.(1981-83)
77=Cherokee 4WD-2 Dr.(1984-86)
78=Cherokee 4WD-4 Dr.(1984-86)
85=CJ-5 (1981-83)
86=CJ-6(1981)
87=CJ-7(1981-86)
88=CJ-8, Scrambler(1981-86)
64=Comanche 2WD-6 Ft. Box(1986)
66=Comanche 2WD-7 Ft. Box(1986)
63=Comanche 4WD-6 Ft. Box(1986)
65=Comanche 4WD-7 Ft. Box(1986)
15=Grand Wagoneer 4 Dr.(1984-86)
25=J-10 Truck 7 Ft. Box(1981-84)
26=J10 Truck 8 Ft. Box(1981-86)
27=J-20 Truck 8 Ft. Box(1981-86)
15=Wagoneer 4 Dr.(1981-83)
75=Wagoneer 4WD-4 Dr.(1984-86)

BODY
CJ=CJ-5, CJ-6, CJ-7, CJ-8, Scrambler(1981-86)
MJ=Comanche Pickup(1986)

STYLES
SJ=Wagoneer(1981-83), Grand Wagoneer(1984-86), Cherokee(1981-83), J-10, J-20(1981-86)
XJ=Wagoneer(1984-86), Cherokee(1984-86)

AR = Use as Required - = Non Illustrated Part P.A.R. = Paint as Required

PANELS, INTERIOR TRIM, FRONT 4 DOOR XJ CHEROKEE, XJ WAGONEER
Figure 47-1000

81J 047 1000

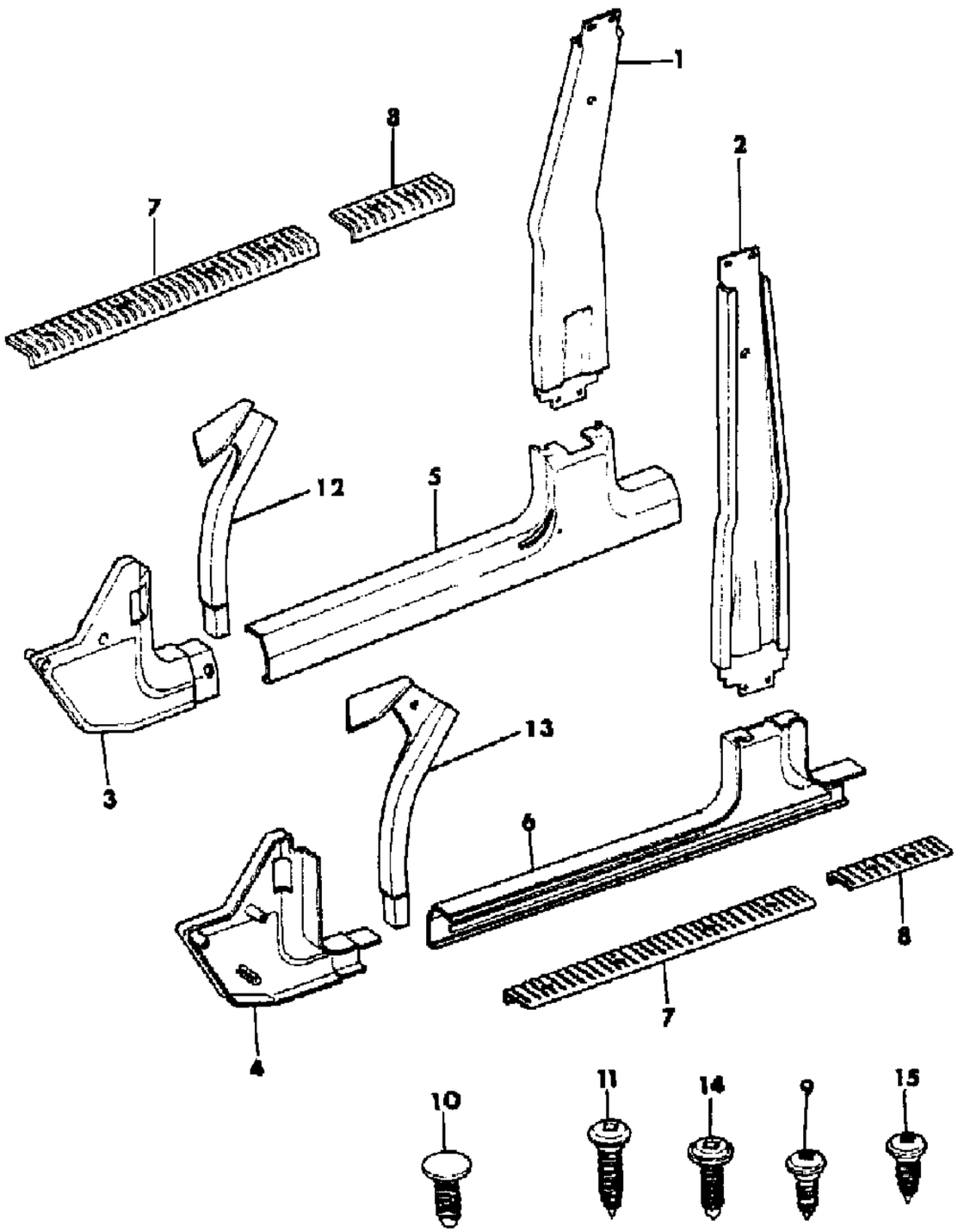

ITEM	PART NUMBER	QTY	BODY	MODEL	DESCRIPTION
	5500 5762	1			P.A.R., 1986
6					PANEL, Center Trim Lower
	5500 1715	1			Almond, 1984-85
	5500 8431	1			Med. Blue, 1984-85
	5500 1713	1			Slate Blue, 1984-85
	5500 1717	1			Garnet, 1984-85
	5500 5763	1			Honey, 1984-85
	5500 1719	1			Nutmeg, 1984-85
	5500 5763	1			P.A.R., 1986
7	5500 3370	2			PLATE, Scuff
8	5500 3372	2			PLATE, Scuff
9	3420 1314	4			SCREW
10	3420 1545	6			CLIP
11	3420 1593	10			SCREW
12	5500 4466	1			FILLER, Pillar, P.A.R.
13	5500 1167	1			FILLER, Pillar, P.A.R.
14					SCREW
	3420 1468	4			25mm
	3420 1292	2			13mm
15	3420 1413	12			SCREW

MODEL CODES

16=Cherokee 2 Dr.(1981-83)
17=Cherokee 2 Dr.(1981-83)
73=Cherokee 2WD-2 Dr.(1984-86)
74=Cherokee 2WD-4 Dr.(1984-86)
18=Cherokee 4 Dr.(1981-83)
77=Cherokee 4WD-2 Dr.(1984-86)
78=Cherokee 4WD-4 Dr.(1984-86)
85=CJ-5 (1981-83)
86=CJ-6(1981)
87=CJ-7(1981-86)
88=CJ-8, Scrambler(1981-86)
64=Comanche 2WD-6 Ft. Box(1986)
66=Comanche 2WD-7 Ft. Box(1986)
63=Comanche 4WD-6 Ft. Box(1986)
65=Comanche 4WD-7 Ft. Box(1986)
15=Grand Wagoneer 4 Dr.(1984-86)
25=J-10 Truck 7 Ft. Box(1981-84)
26=J10 Truck 8 Ft. Box(1981-86)
27=J-20 Truck 8 Ft. Box(1981-86)
15=Wagoneer 4 Dr.(1981-83)
75=Wagoneer 4WD-4 Dr.(1984-86)

BODY
CJ=CJ-5, CJ-6, CJ-7, CJ-8, Scrambler(1981-86)
MJ=Comanche Pickup(1986)

STYLES
SJ=Wagoneer(1981-83), Grand Wagoneer(1984-86), Cherokee(1981-83), J-10, J-20(1981-86)
XJ=Wagoneer(1984-86), Cherokee(1984-86)

AR = Use as Required - = Non Illustrated Part P.A.R. = Paint as Required

« RETURN TO GROUP INDEX

PANELS, INTERIOR TRIM, REAR 4 DOOR XJ CHEROKEE, XJ WAGONEER
Figure 47-1100

81J 047 1100

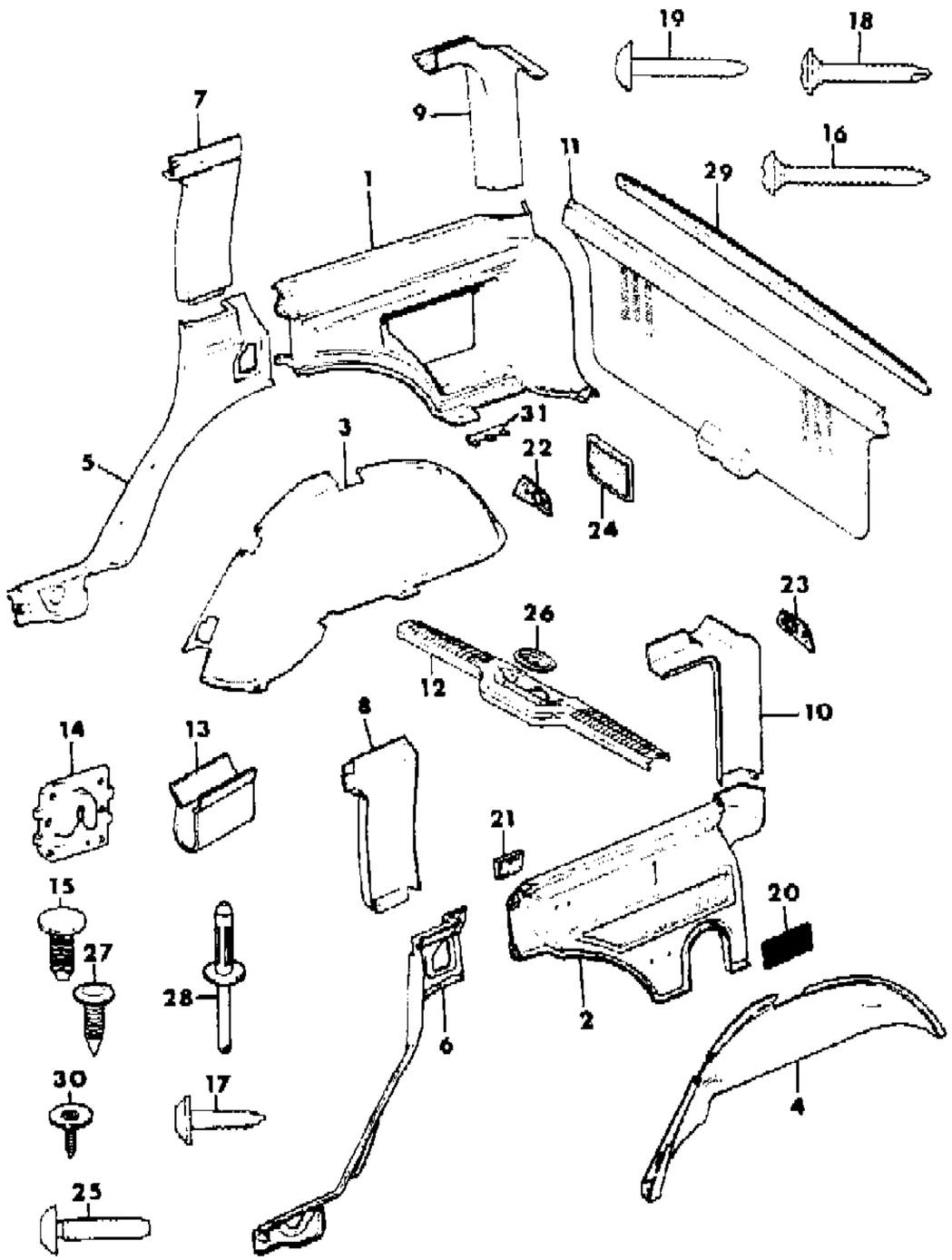

ITEM	PART NUMBER	QTY	BODY	MODEL	DESCRIPTION
1					PANEL, Quarter Trim
	5500 1638	1			Almond, 1984
	5505 2540	1			Almond, 1985
	5500 8392	1			Med. Blue, 1984-85
	5500 1636	1			Slate Blue, 1984
	5505 2538	1			Slate Blue, 1985
	5500 1640	1			Garnet, 1984
	5505 2542	1			Garnet, 1985
	5500 5746	1			Honey, 1984-85
	5500 1642	1			Nutmeg, 1984-85
	5505 2546	1			P.A.R., 1986
2					PANEL, Quarter Trim
	5500 3761	1			Almond, 1984-85
	5500 8393	1			Med. Blue, 1984-85
	5500 3759	1			Slate Blue, 1984
	5500 8301	1			Slate Blue, 1985
	5500 3763	1			Garnet, 1984
	5500 8305	1			Garnet, 1985
	5500 5749	1			Honey, 1984-85
	5500 3765	1			Nutmeg, 1984-85
	5500 8307	1			P.A.R., 1986
3					COVER, Wheelhouse
	5500 2292	1			Almond, 1984-85
	5500 2290	1			Slate Blue, 1984-85
	5500 8426	1			P.A.R., 1986
4					COVER, Wheelhouse
	5502 293	1			Almond, 1984-85
	5500 2291	1			Slate Blue, 1984-85
	5500 8427	1			P.A.R., 1986
5					PANEL, Extension
	5500 1670	1			Almond, 1984-85
	5500 8420	1			Med. Blue, 1984-85
	5500 1668	1			Slate Blue, 1984-85
	5500 1672	1			Garnet, 1984-85
	5505 760	1			Honey, 1984-85
	5500 1674	1			Nutmeg, 1984-85
	5500 5760	1			P.A.R., 1986
6					PANEL, Extension
	5500 1671	1			Almond, 1984-85

MODEL CODES
16=Cherokee 2 Dr.(1981-83)
17=Cherokee 2 Dr.(1981-83)
73=Cherokee 2WD-2 Dr.(1984-86)
74=Cherokee 2WD-4 Dr.(1984-86)
18=Cherokee 4 Dr.(1981-83)
77=Cherokee 4WD-2 Dr.(1984-86)
78=Cherokee 4WD-4 Dr.(1984-86)
85=CJ-5 (1981-83)
86=CJ-6(1981)
87=CJ-7(1981-86)
88=CJ-8, Scrambler(1981-86)
64=Comanche 2WD-6 Ft. Box(1986)
66=Comanche 2WD-7 Ft. Box(1986)
63=Comanche 4WD-6 Ft. Box(1986)
65=Comanche 4WD-7 Ft. Box(1986)
15=Grand Wagoneer 4 Dr.(1984-86)
25=J-10 Truck 7 Ft. Box(1981-84)
26=J10 Truck 8 Ft. Box(1981-86)
27=J-20 Truck 8 Ft. Box(1981-86)
15=Wagoneer 4 Dr.(1981-83)
75=Wagoneer 4WD-4 Dr.(1984-86)

BODY
CJ=CJ-5, CJ-6, CJ-7, CJ-8, Scrambler(1981-86)
MJ=Comanche Pickup(1986)

STYLES
SJ=Wagoneer(1981-83), Grand Wagoneer(1984-86), Cherokee(1981-83), J-10, J-20(1981-86)
XJ=Wagoneer(1984-86), Cherokee(1984-86)

AR = Use as Required - = Non Illustrated Part P.A.R. = Paint as Required

« RETURN TO GROUP INDEX »

PANELS, INTERIOR TRIM, REAR 4 DOOR XJ CHEROKEE, XJ WAGONEER
Figure 47-1100

81J 047 1100

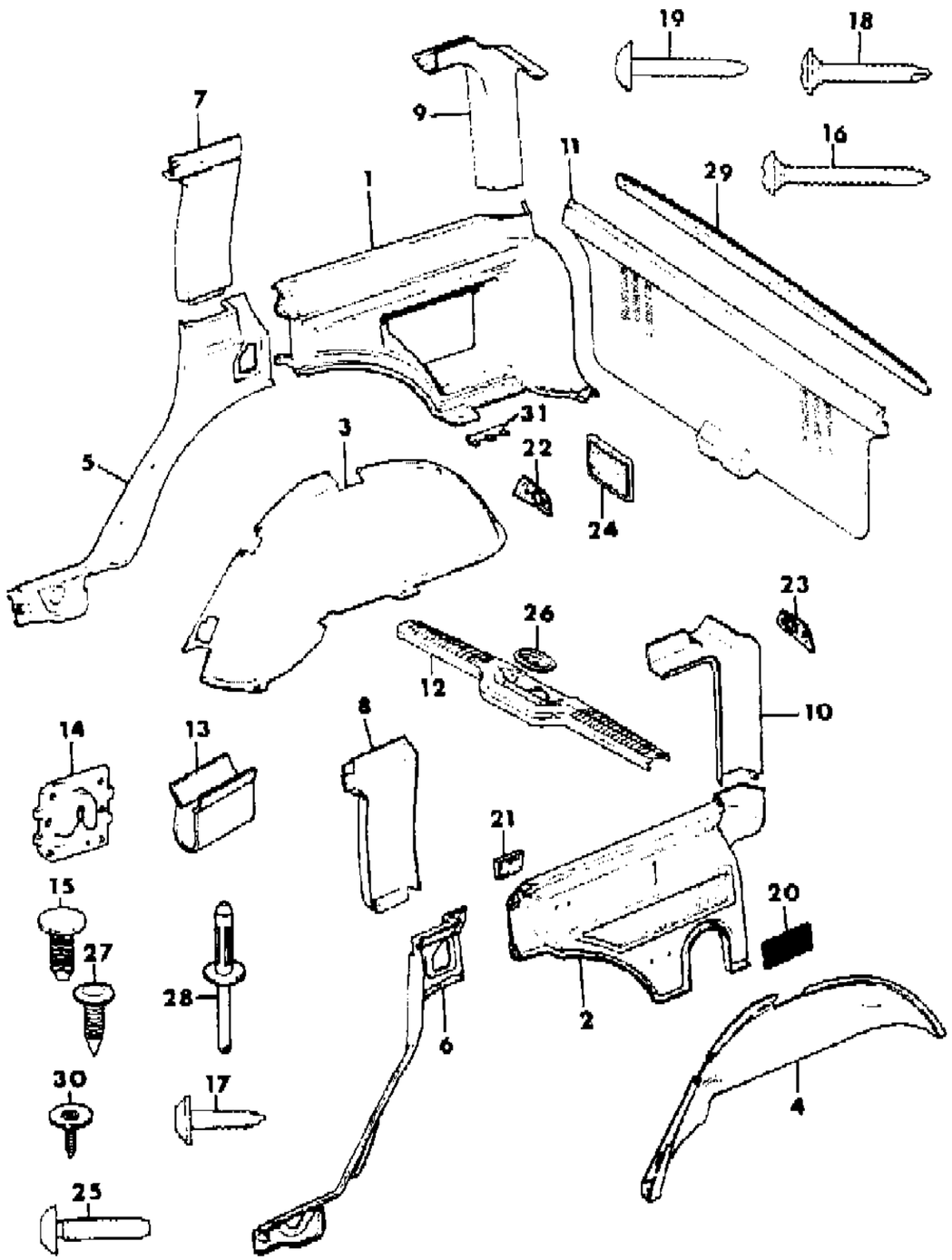

ITEM	PART NUMBER	QTY	BODY	MODEL	DESCRIPTION
	5500 8421	1			Med. Blue, 1984-85
	5500 1669	1			Slate Blue, 1984-85
	5500 1673	1			Garnet, 1984-85
	5500 5761	1			Honey, 1984-85
	5500 1675	1			Nutmeg, 1984-85
	5500 5761	1			P.A.R., 1986
7					COVER, Lock Pillar
	5500 3110	1			Almond, 1984-85
	5500 8454	1			Med. Blue, 1984-85
	5500 3108	1			Slate Blue, 1984-85
	5500 3112	1			Garnet, 1984-85
	5500 5776	1			Honey, 1984-85
	5500 3114	1			Nutmeg, 1984-85
	5500 5776	1			P.A.R., 1986
8					COVER, Lock Pillar
	5500 3111	1			Almond, 1984-85
	5500 8455	1			Med. Blue, 1984-85
	5500 3109	1			Slate Blue, 1984-85
	5500 3113	1			Garnet, 1984-85
	5500 5777	1			Honey, 1984-85
	5500 3115	1			Nutmeg, 1984-85
	5500 5777	1			P.A.R., 1986
9					COVER, Lift Door Pillar
	5500 3082	1			Almond, 1984-85
	5500 8442	1			Med. Blue, 1984-85
	5500 3080	1			Slate Blue, 1984-85
	5500 3084	1			Garnet, 1984-85
	5500 5770	1			Honey, 1984-85
	5500 3086	1			Nutmeg, 1984-85
	5500 5770	1			P.A.R., 1986
10					COVER, Lift Door Pillar
	5500 3083	1			Almond, 1984-85
	5500 8443	1			Med. Blue, 1984-85
	5500 3081	1			Slate Blue, 1984-85
	5500 3085	1			Garnet, 1984-85
	5500 5771	1			Honey, 1984-85
	5500 3087	1			Nutmeg, 1984-85
	5500 5771	1			P.A.R., 1986
11					PANEL, Lift Door Trim

MODEL CODES
16=Cherokee 2 Dr.(1981-83)
17=Cherokee 2 Dr.(1981-83)
73=Cherokee 2WD-2 Dr.(1984-86)
74=Cherokee 2WD-4 Dr.(1984-86)
18=Cherokee 4 Dr.(1981-83)
77=Cherokee 4WD-2 Dr.(1984-86)
78=Cherokee 4WD-4 Dr.(1984-86)
85=CJ-5 (1981-83)
86=CJ-6(1981)
87=CJ-7(1981-86)
88=CJ-8, Scrambler(1981-86)
64=Comanche 2WD-6 Ft. Box(1986)
66=Comanche 2WD-7 Ft. Box(1986)
63=Comanche 4WD-6 Ft. Box(1986)
65=Comanche 4WD-7 Ft. Box(1986)
15=Grand Wagoneer 4 Dr.(1984-86)
25=J-10 Truck 7 Ft. Box(1981-84)
26=J10 Truck 8 Ft. Box(1981-86)
27=J-20 Truck 8 Ft. Box(1981-86)
15=Wagoneer 4 Dr.(1981-83)
75=Wagoneer 4WD-4 Dr.(1984-86)

BODY
CJ=CJ-5, CJ-6, CJ-7, CJ-8, Scrambler(1981-86)
MJ=Comanche Pickup(1986)

STYLES
SJ=Wagoneer(1981-83), Grand Wagoneer(1984-86), Cherokee(1981-83), J-10, J-20(1981-86)
XJ=Wagoneer(1984-86), Cherokee(1984-86)

AR = Use as Required - = Non Illustrated Part P.A.R. = Paint as Required

PANELS, INTERIOR TRIM, REAR 4 DOOR XJ CHEROKEE, XJ WAGONEER
Figure 47-1100

81J 047 1100

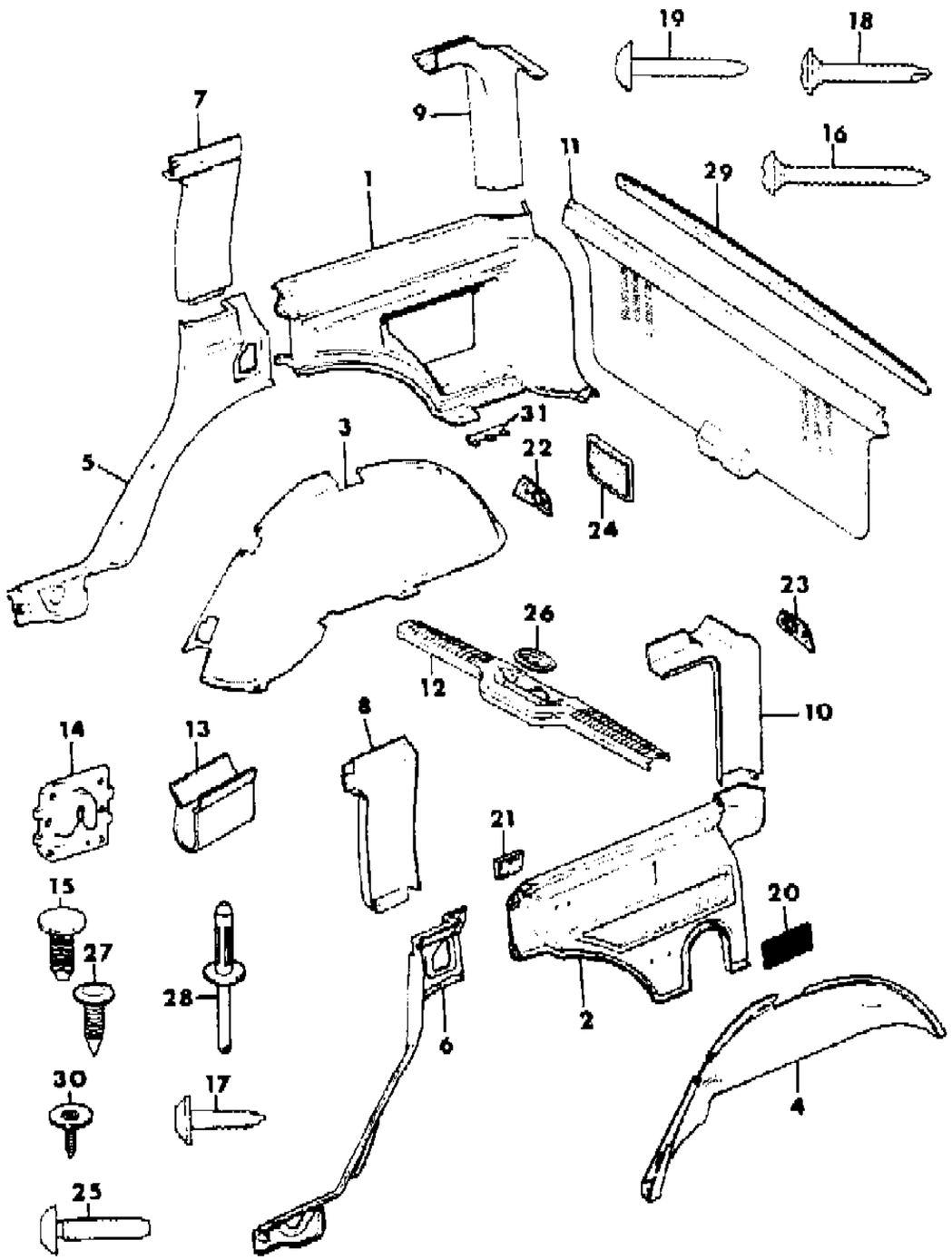

ITEM	PART NUMBER	QTY	BODY	MODEL	DESCRIPTION
	5500 6605	1			Almond, Base Model, 1984-85
	5500 1941	1			Almond, w/o Base Model, 1984-85
	5501 0187	1			Black, Base Model, 1986
	5501 0187	1			Black, Base Model, 1986
	5501 0190	1			Black, w/o Base Model, 1986
	5501 0189	1			Med. Blue, 1984-86
	5500 6604	1			Slate Blue, Base Model, 1984-85
	5500 1940	1			Slate Blue, w/o Base Model, 1984-85
	5501 1814	1			Cordovan, 1986
	5500 1942	1			Garnet, 1984-85
	5501 0185	1			Garnet, 1986
	5500 5787	1			Honey, 1984-85
	5501 0188	1			Honey, Base Model, 1986
	5501 0186	1			Honey, w/o Base Model, 1986
	5500 1943	1			Nutmeg, 1984-85
	5501 1813	1			Tan, Base Model, 1986
	5501 1815	1			Tan, w/o Base Model, 1986
12					PLATE, Lift Door Scuff
	5500 1769	1			Almond, 1984-85
	5500 8462	1			Med. Blue, 1984-85
	5500 1768	1			Slate Blue, 1984-85
	5500 1770	1			Garnet, 1984-85
	5500 5757	1			Honey, 1984-85
	5500 1771	1			Nutmeg, 1984-85
	5500 5757	1			P.A.R., 1986
13	J400 1551	12			CLIP
14	3420 1299	14			RETAINER, Clip
15	3420 1545	14			CLIP
16					SCREW
	3420 1403	4			13mm
	3420 1719	4			16mm
	3420 1400	2			40mm
17					SCREW
	3420 1314	8			13mm
18					SCREW
	3420 1398	6			25mm
19					SCREW
	3420 1468	14			25mm
20	5500 4406	1			SCREEN, Louver

MODEL CODES

16=Cherokee 2 Dr.(1981-83)
17=Cherokee 2 Dr.(1981-83)
73=Cherokee 2WD-2 Dr.(1984-86)
74=Cherokee 2WD-4 Dr.(1984-86)
18=Cherokee 4 Dr.(1981-83)
77=Cherokee 4WD-2 Dr.(1984-86)
78=Cherokee 4WD-4 Dr.(1984-86)
85=CJ-5 (1981-83)
86=CJ-6(1981)
87=CJ-7(1981-86)
88=CJ-8, Scrambler(1981-86)
64=Comanche 2WD-6 Ft. Box(1986)
66=Comanche 2WD-7 Ft. Box(1986)
63=Comanche 4WD-6 Ft. Box(1986)
65=Comanche 4WD-7 Ft. Box(1986)
15=Grand Wagoneer 4 Dr.(1984-86)
25=J-10 Truck 7 Ft. Box(1981-84)
26=J10 Truck 8 Ft. Box(1981-86)
27=J-20 Truck 8 Ft. Box(1981-86)
15=Wagoneer 4 Dr.(1981-83)
75=Wagoneer 4WD-4 Dr.(1984-86)

BODY
CJ=CJ-5, CJ-6, CJ-7, CJ-8, Scrambler(1981-86)
MJ=Comanche Pickup(1986)

STYLES
SJ=Wagoneer(1981-83), Grand Wagoneer(1984-86), Cherokee(1981-83), J-10, J-20(1981-86)
XJ=Wagoneer(1984-86), Cherokee(1984-86)

AR = Use as Required - = Non Illustrated Part P.A.R. = Paint as Required

PANELS, INTERIOR TRIM, REAR 4 DOOR XJ CHEROKEE, XJ WAGONEER
Figure 47-1100

81J 047 1100

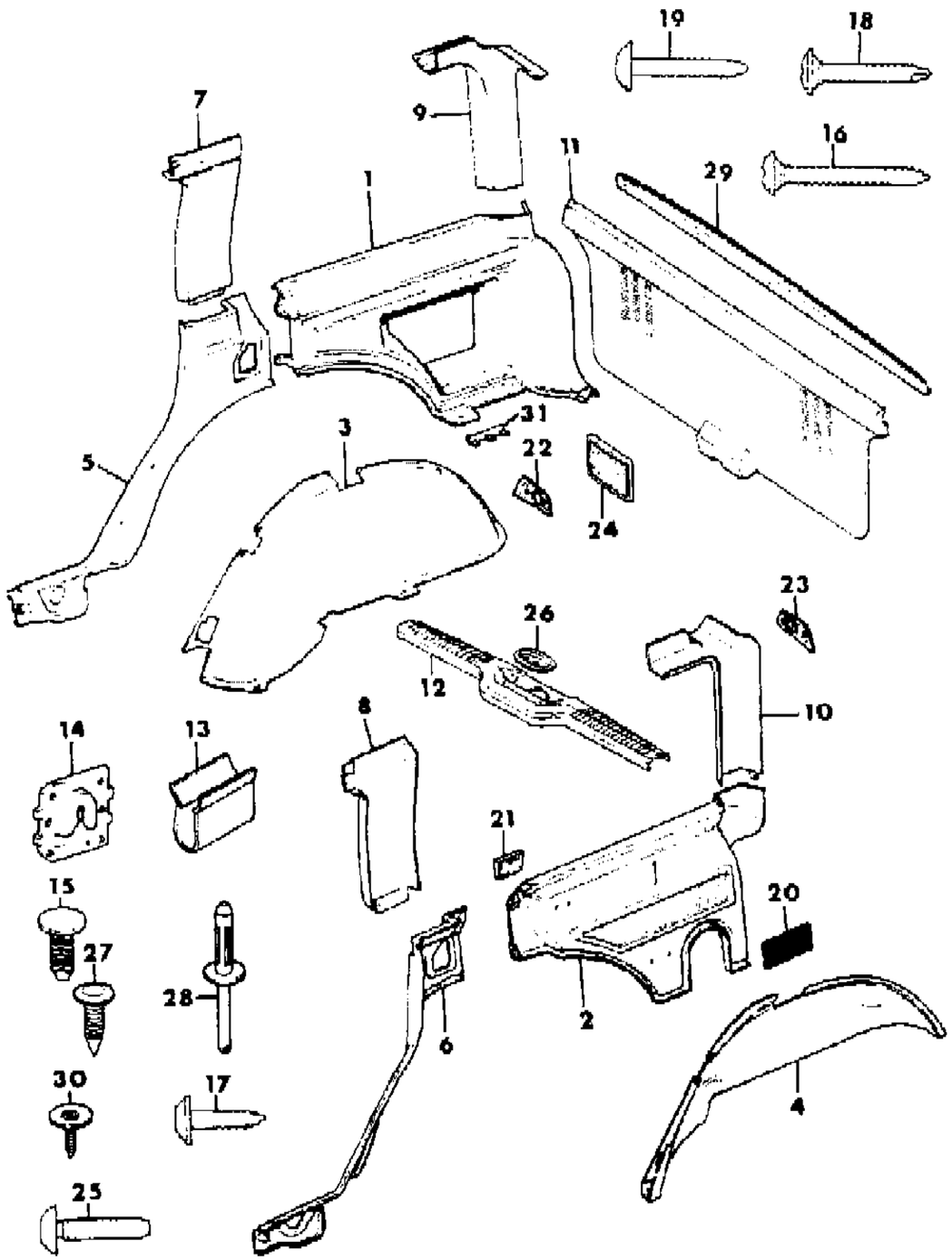

ITEM	PART NUMBER	QTY	BODY	MODEL	DESCRIPTION
21					PAD, Spare Tire Rest
	5500 3745	1			Almond, 1984-85
	5500 8414	1			Med. Blue, 1984-85
	5500 3744	1			Slate Blue, 1984-85
	5500 3746	1			Garnet, 1984-85
	5500 5756	1			Honey, 1984-85
	5500 3747	1			Nutmeg, 1984-85
	5500 5756	1			P.A.R., 1986
22	5500 5230	1			COVER, Rear Header
23	5500 5231	1			COVER, Rear Header
24					GRILLE, Speaker, 1986
	3501 4012	2			Black
	3501 4000	2			Med. Blue
	3501 6858	2			Cordovan
	3501 4002	2			Garnet
	3501 4013	2			Honey
	3501 4001	2			Tan
25					SCREW
	3420 1946	4			19mm
26	5500 4352	1			RETAINER, Scuff Plate
27					FASTENER
	J400 7130	AR			Almond, 1984-85
	J400 7374	AR			Med. Blue, 1984-85
	J400 6969	AR			Slate Blue, 1984-85
	J400 7168	AR			Garnet, 1984-85
	J400 7129	AR			Honey, 1984-85
	J400 6967	AR			Nutmeg, 1984-85
	J400 7129	AR			P.A.R., 1986
28	3420 1835	7			RIVET, P.A.R.
29	5500 8064	1			RETAINER
30	3420 2419	8			SCREW
31	5500 5494	1			RETAINER, Trim Panel

MODEL CODES
16=Cherokee 2 Dr.(1981-83)
17=Cherokee 2 Dr.(1981-83)
73=Cherokee 2WD-2 Dr.(1984-86)
74=Cherokee 2WD-4 Dr.(1984-86)
18=Cherokee 4 Dr.(1981-83)
77=Cherokee 4WD-2 Dr.(1984-86)
78=Cherokee 4WD-4 Dr.(1984-86)
85=CJ-5 (1981-83)
86=CJ-6(1981)
87=CJ-7(1981-86)
88=CJ-8, Scrambler(1981-86)
64=Comanche 2WD-6 Ft. Box(1986)
66=Comanche 2WD-7 Ft. Box(1986)
63=Comanche 4WD-6 Ft. Box(1986)
65=Comanche 4WD-7 Ft. Box(1986)
15=Grand Wagoneer 4 Dr.(1984-86)
25=J-10 Truck 7 Ft. Box(1981-84)
26=J10 Truck 8 Ft. Box(1981-86)
27=J-20 Truck 8 Ft. Box(1981-86)
15=Wagoneer 4 Dr.(1981-83)
75=Wagoneer 4WD-4 Dr.(1984-86)

BODY
CJ=CJ-5, CJ-6, CJ-7, CJ-8, Scrambler(1981-86)
MJ=Comanche Pickup(1986)

STYLES
SJ=Wagoneer(1981-83), Grand Wagoneer(1984-86), Cherokee(1981-83), J-10, J-20(1981-86)
XJ=Wagoneer(1984-86), Cherokee(1984-86)

AR = Use as Required - = Non Illustrated Part P.A.R. = Paint as Required

« RETURN TO GROUP INDEX

CARPETS AND MATS XJ CHEROKEE, XJ WAGONEER, COMANCHE
Figure 47-1200

81J 047 1200

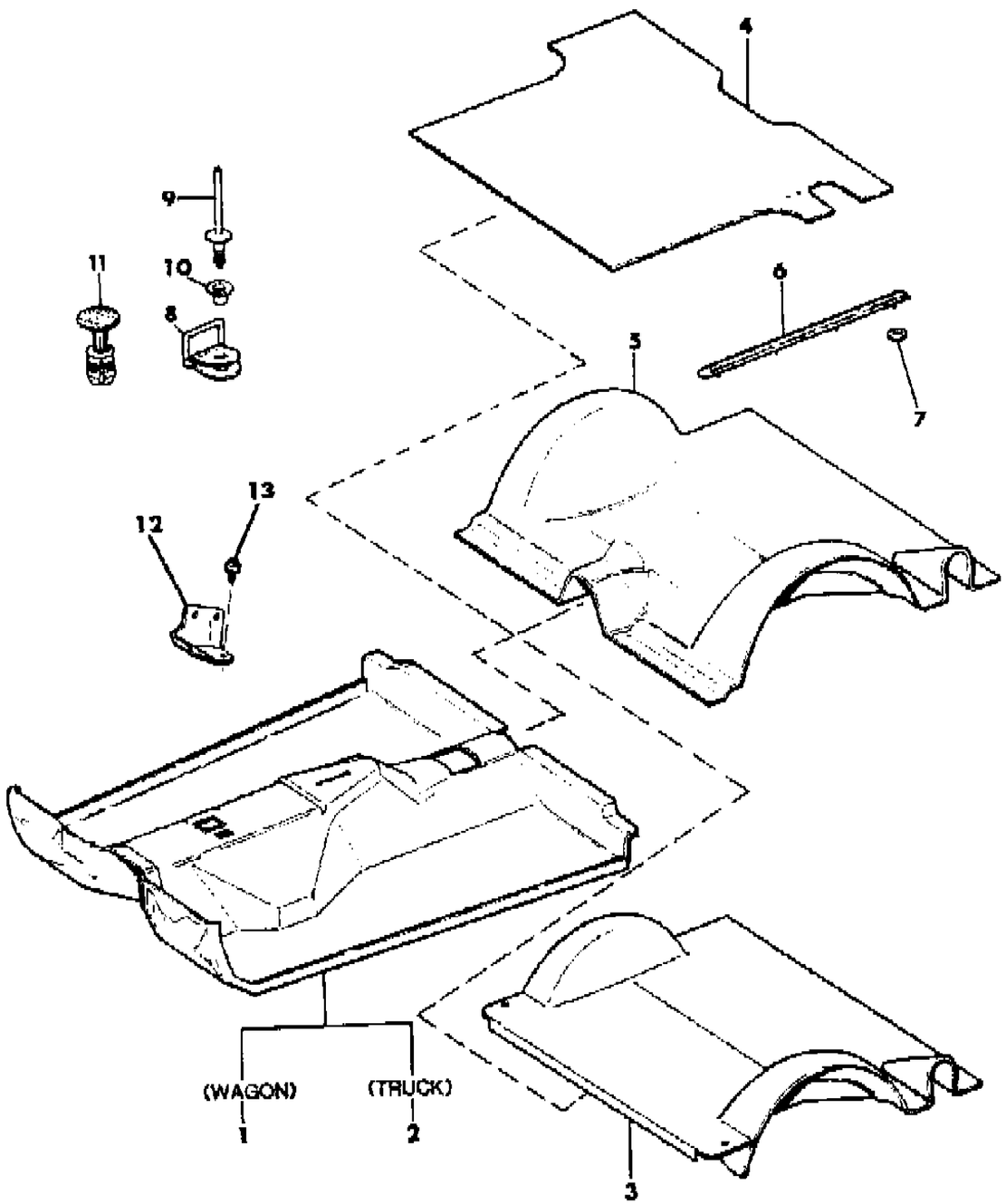

ITEM	PART NUMBER	QTY	BODY	MODEL	DESCRIPTION
1					CARPET, Front Floor
					w/o Extra Quiet Insulation
	5500 1562	1			Almond, 1984-85
	5500 8707	1			Black, 1986
	5501 0365	1			Med. Blue, 1984-85
	5500 8706	1			Med. Blue, 1986
	5500 1563	1			Slate Blue, 1984-85
	5501 1537	1			Cordovan, 1986
	5500 1565	1			Garnet, 1984-86
	5500 6094	1			Honey, 1984-86
	5500 1564	1			Nutmeg, 1984-85
	5501 1538	1			Tan, 1986
					w/Extra Quiet Insulation
	5500 5349	1			Almond, 1984-85
	5500 8709	1			Black, 1986
	5501 0369	1			Med. Blue, 1984-85
	5500 8708	1			Med. Blue, 1986
	5500 5348	1			Slate Blue, 1984-85
	5501 1541	1			Cordovan, 1986
	5500 1567	1			Garnet, 1984-86
	5500 6096	1			Honey, 1984-86
	5500 1566	1			Nutmeg, 1984-85
	5501 1542	1			Tan, 1986
					MAT, Front Floor
	5500 6104	1			Almond, 1984-85
	5500 4524	1			Black, 1984-85
	5500 8700	1			Black, 1986
	5500 6103	1			Slate Blue, 1984-85
2					CARPET, Floor
	5500 6435	1			Black
	5500 6434	1			Med. Blue
	5501 1551	1			Cordovan
	5500 6436	1			Garnet
	5500 6437	1			Honey
	5501 1552	1			Tan
3					CARPET, Cargo
					French Commercial Package
	5500 8726	1			Med. Blue
	5501 5359	1			Cordovan

MODEL CODES

16=Cherokee 2 Dr.(1981-83)	78=Cherokee 4WD-4 Dr.(1984-86)	64=Comanche 2WD-6 Ft. Box(1986)	25=J-10 Truck 7 Ft. Box(1981-84)
17=Cherokee 2 Dr.(1981-83)	85=CJ-5 (1981-83)	66=Comanche 2WD-7 Ft. Box(1986)	26=J10 Truck 8 Ft. Box(1981-86)
73=Cherokee 2WD-2 Dr.(1984-86)	86=CJ-6(1981)	63=Comanche 4WD-6 Ft. Box(1986)	27=J-20 Truck 8 Ft. Box(1981-86)
74=Cherokee 2WD-4 Dr.(1984-86)	87=CJ-7(1981-86)	65=Comanche 4WD-7 Ft. Box(1986)	15=Wagoneer 4 Dr.(1981-83)
18=Cherokee 4 Dr.(1981-83)	88=CJ-8, Scrambler(1981-86)	15=Grand Wagoneer 4 Dr.(1984-86)	75=Wagoneer 4WD-4 Dr.(1984-86)
77=Cherokee 4WD-2 Dr.(1984-86)			

BODY
CJ=CJ-5, CJ-6, CJ-7, CJ-8, Scrambler(1981-86)
MJ=Comanche Pickup(1986)

STYLES
SJ=Wagoneer(1981-83), Grand Wagoneer(1984-86), Cherokee(1981-83), J-10, J-20(1981-86)
XJ=Wagoneer(1984-86), Cherokee(1984-86)

AR = Use as Required - = Non Illustrated Part P.A.R. = Paint as Required

81J 047 1200

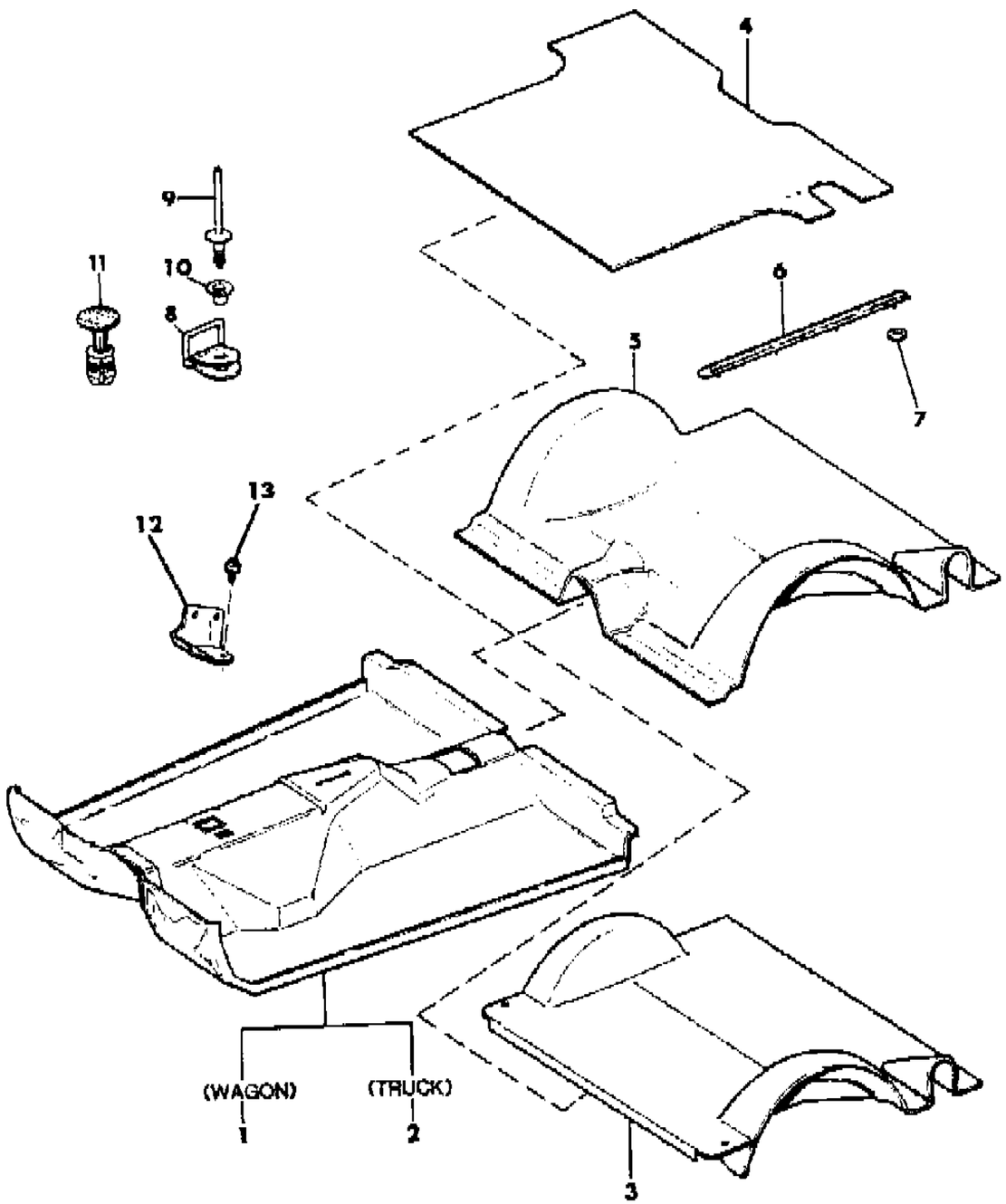

ITEM	PART NUMBER	QTY	BODY	MODEL	DESCRIPTION
4					MAT, Rear Cargo
	5500 6100	1			Almond, 1984-85
	5500 0717	1			Black, 1984-85
	5500 8727	1			Black, 1986
5					CARPET, Rear
					w/o Wagoneer Limited or Cherokee Laredo, 1984-85
	5500 1578	1			Almond
	5500 8722	1			Med. Blue
	5500 1579	1			Slate Blue
	5500 1581	1			Garnet
	5500 7277	1			Honey
	5500 1580	1			Nutmeg
					w/Wagoneer Limited or Cherokee Laredo, 1984-85
	5500 5848	1			Garnet
	5500 7283	1			Honey
	5500 5849	1			Nutmeg
					Wagoneer or Cherokee Limited, or Cherokee Laredo, 1986
	5500 8723	1			Black
	5500 8722	1			Med. Blue
	5501 1930	1			Cordovan
	5500 1581	1			Garnet
	5500 7277	1			Honey
	5501 1932	1			Tan
					Wagoneer Limited or Cherokee Laredo Model, 1986
	5501 1938	1			Cordovan
	5500 5848	1			Garnet
	5500 7283	1			Honey
	5501 1940	1			Tan
					Cherokee Limited, 1986
	5501 8720	1			Black
6	5500 1078	6			STRIP, Skid ***
7	3420 2014	12			NUT, Push
8	5500 6967	4			LOOP, Cargo Tie Down ***
9	3420 2083	4			RIVET
10	3420 2365	4			WASHER
11	3420 2138	2			FASTENER
12	5500 5436	1			RETAINER, Front Carpet, P.A.R.
13	3420 1398	4			SCREW

MODEL CODES

16=Cherokee 2 Dr.(1981-83)	78=Cherokee 4WD-4 Dr.(1984-86)	64=Comanche 2WD-6 Ft. Box(1986)	25=J-10 Truck 7 Ft. Box(1981-84)
17=Cherokee 2 Dr.(1981-83)	85=CJ-5 (1981-83)	66=Comanche 2WD-7 Ft. Box(1986)	26=J10 Truck 8 Ft. Box(1981-86)
73=Cherokee 2WD-2 Dr.(1984-86)	86=CJ-6(1981)	63=Comanche 4WD-6 Ft. Box(1986)	27=J-20 Truck 8 Ft. Box(1981-86)
74=Cherokee 2WD-4 Dr.(1984-86)	87=CJ-7(1981-86)	65=Comanche 4WD-7 Ft. Box(1986)	15=Wagoneer 4 Dr.(1981-83)
18=Cherokee 4 Dr.(1981-83)	88=CJ-8, Scrambler(1981-86)	15=Grand Wagoneer 4 Dr.(1984-86)	75=Wagoneer 4WD-4 Dr.(1984-86)
77=Cherokee 4WD-2 Dr.(1984-86)			

BODY
CJ=CJ-5, CJ-6, CJ-7, CJ-8, Scrambler(1981-86)
MJ=Comanche Pickup(1986)

STYLES
SJ=Wagoneer(1981-83), Grand Wagoneer(1984-86), Cherokee(1981-83), J-10, J-20(1981-86)
XJ=Wagoneer(1984-86), Cherokee(1984-86)

AR = Use as Required - = Non Illustrated Part P.A.R. = Paint as Required

PANELS, DOOR TRIM 2 DOOR, 1984-85 XJ CHEROKEE
Figure 47-1300

81J 047 1300

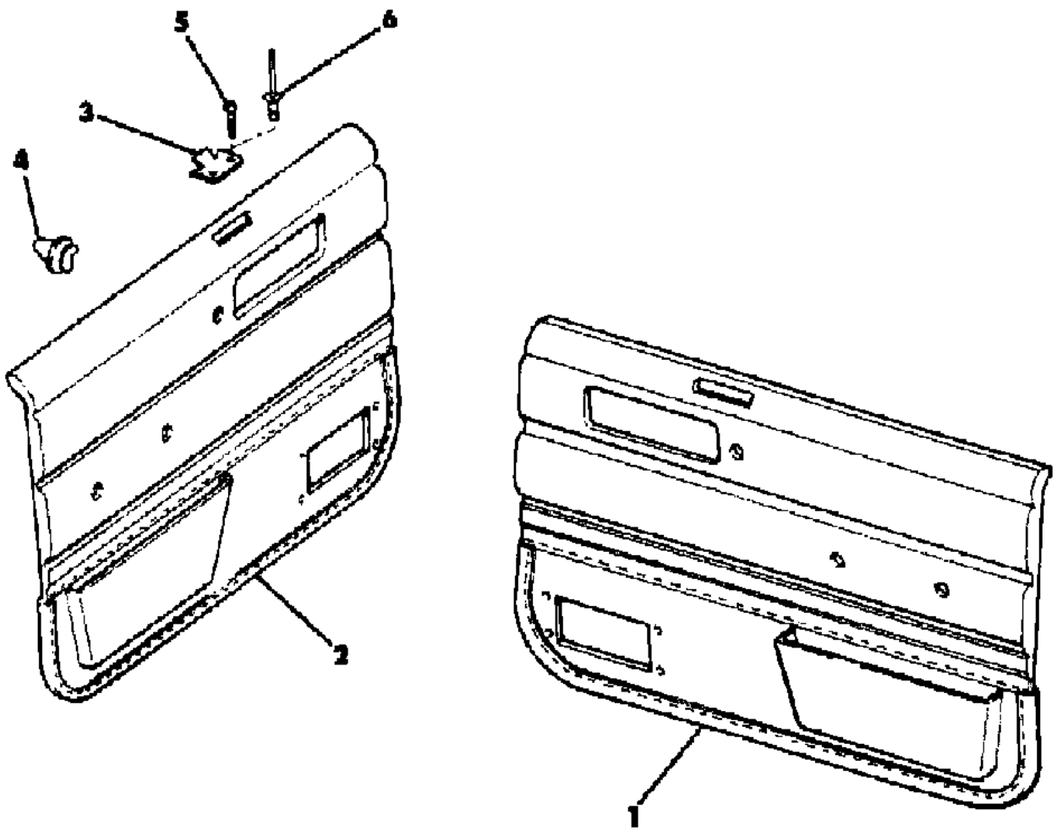

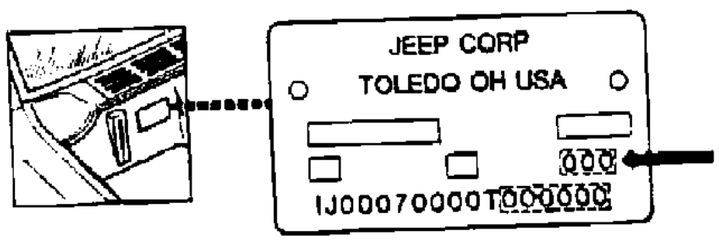

ITEM	PART NUMBER	QTY	BODY	MODEL	DESCRIPTION
1					PANEL, Door Trim
					Trim Code:
	5500 1816	1			3PX
	5500 1820	1			3QE, 3QU, 3QV
	5501 0226	1			3QUP, 3QVP
	5500 1824	1			4QU, 4QV
	5500 1828	1			4QW
	5500 1826	1			5QU, 5QV
	5500 1818	1			6PX
	5500 1822	1			6QU, 6QV
	5500 5798	1			9QU, 9QV
	5500 1830	1			9QW
2					PANEL, Door Trim
					Trim Code:
	5500 1817	1			3PX
	5500 1821	1			3QE, 3QU, 3QV
	5501 0227	1			3QUP, 3QVP
	5500 1825	1			4QU, 4QV
	5500 1829	1			4QW
	5500 1827	1			5QU, 5QV
	5500 1819	1			6PX
	5500 1823	1			6QU, 6QV
	5500 5799	1			9QU, 9QV
	5500 1831	1			9QW
3	5500 3629	2			BRACKET, Door Trim
4	3420 1681	30			CLIP
5	3420 1292	4			SCREW
6	3420 1778	4			RIVET

MODEL CODES

16=Cherokee 2 Dr.(1981-83)	78=Cherokee 4WD-4 Dr.(1984-86)	64=Comanche 2WD-6 Ft. Box(1986)	25=J-10 Truck 7 Ft. Box(1981-84)
17=Cherokee 2 Dr.(1981-83)	85=CJ-5 (1981-83)	66=Comanche 2WD-7 Ft. Box(1986)	26=J10 Truck 8 Ft. Box(1981-86)
73=Cherokee 2WD-2 Dr.(1984-86)	86=CJ-6(1981)	63=Comanche 4WD-6 Ft. Box(1986)	27=J-20 Truck 8 Ft. Box(1981-86)
74=Cherokee 2WD-4 Dr.(1984-86)	87=CJ-7(1981-86)	65=Comanche 4WD-7 Ft. Box(1986)	15=Wagoneer 4 Dr.(1981-83)
18=Cherokee 4 Dr.(1981-83)	88=CJ-8, Scrambler(1981-86)	15=Grand Wagoneer 4 Dr.(1984-86)	75=Wagoneer 4WD-4 Dr.(1984-86)
77=Cherokee 4WD-2 Dr.(1984-86)			

BODY
CJ=CJ-5, CJ-6, CJ-7, CJ-8, Scrambler(1981-86)
MJ=Comanche Pickup(1986)

STYLES
SJ=Wagoneer(1981-83), Grand Wagoneer(1984-86), Cherokee(1981-83), J-10, J-20(1981-86)
XJ=Wagoneer(1984-86), Cherokee(1984-86)

AR = Use as Required - = Non Illustrated Part P.A.R. = Paint as Required

« RETURN TO GROUP INDEX

PANELS, DOOR TRIM 2 DOOR, 1986 XJ CHEROKEE
Figure 47-1400

81J 047 1400

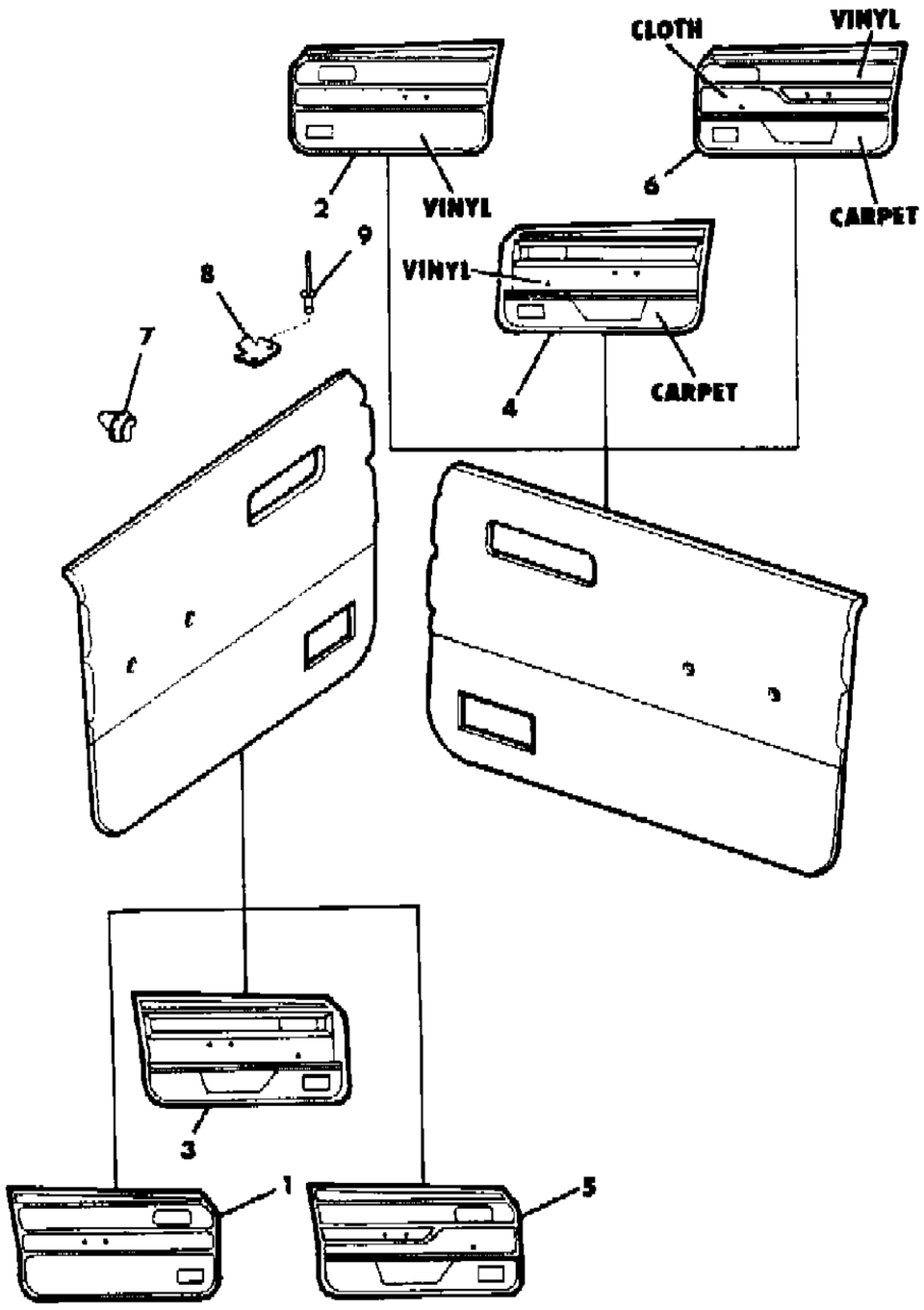

ITEM	PART NUMBER	QTY	BODY	MODEL	DESCRIPTION
1					PANEL, Door Trim
	5500 8601	1			Black
	5500 8603	1			Honey
	5501 2439	1			Tan
2					PANEL, Door Trim
	5500 8600	1			Black
	5500 8602	1			Honey
	5501 2438	1			Tan
3					PANEL, Door Trim
	5501 0229	1			Black
	5501 0227	1			Med. Blue
	5501 0231	1			Garnet
	5501 0233	1			Honey
4					PANEL, Door Trim
	5501 0228	1			Black
	5501 0226	1			Med. Blue
	5501 0230	1			Garnet
	5501 0232	1			Honey
5					PANEL, Door Trim
	5501 2459	1			Cordovan
	5501 0237	1			Garnet
	5501 0239	1			Honey
	5501 2461	1			Tan
6					PANEL, Door Trim
	5501 2458	1			Cordovan
	5501 0236	1			Garnet
	5501 0238	1			Honey
	5501 2460	1			Tan
7	3420 1681	30			CLIP
8	5500 3629	2			BRACKET, Door Trim
9	3420 1778	4			RIVET

MODEL CODES

16=Cherokee 2 Dr.(1981-83)	78=Cherokee 4WD-4 Dr.(1984-86)	64=Comanche 2WD-6 Ft. Box(1986)	25=J-10 Truck 7 Ft. Box(1981-84)
17=Cherokee 2 Dr.(1981-83)	85=CJ-5 (1981-83)	66=Comanche 2WD-7 Ft. Box(1986)	26=J10 Truck 8 Ft. Box(1981-86)
73=Cherokee 2WD-2 Dr.(1984-86)	86=CJ-6(1981)	63=Comanche 4WD-6 Ft. Box(1986)	27=J-20 Truck 8 Ft. Box(1981-86)
74=Cherokee 2WD-4 Dr.(1984-86)	87=CJ-7(1981-86)	65=Comanche 4WD-7 Ft. Box(1986)	15=Wagoneer 4 Dr.(1981-83)
18=Cherokee 4 Dr.(1981-83)	88=CJ-8, Scrambler(1981-86)	15=Grand Wagoneer 4 Dr.(1984-86)	75=Wagoneer 4WD-4 Dr.(1984-86)
77=Cherokee 4WD-2 Dr.(1984-86)			

BODY
CJ=CJ-5, CJ-6, CJ-7, CJ-8, Scrambler(1981-86)
MJ=Comanche Pickup(1986)

STYLES
SJ=Wagoneer(1981-83), Grand Wagoneer(1984-86), Cherokee(1981-83), J-10, J-20(1981-86)
XJ=Wagoneer(1984-86), Cherokee(1984-86)

AR = Use as Required - = Non Illustrated Part P.A.R. = Paint as Required

« RETURN TO GROUP INDEX

PANELS, DOOR TRIM 4 DOOR, 1984-85 XJ CHEROKEE
Figure 47-1500

81J 047 1500

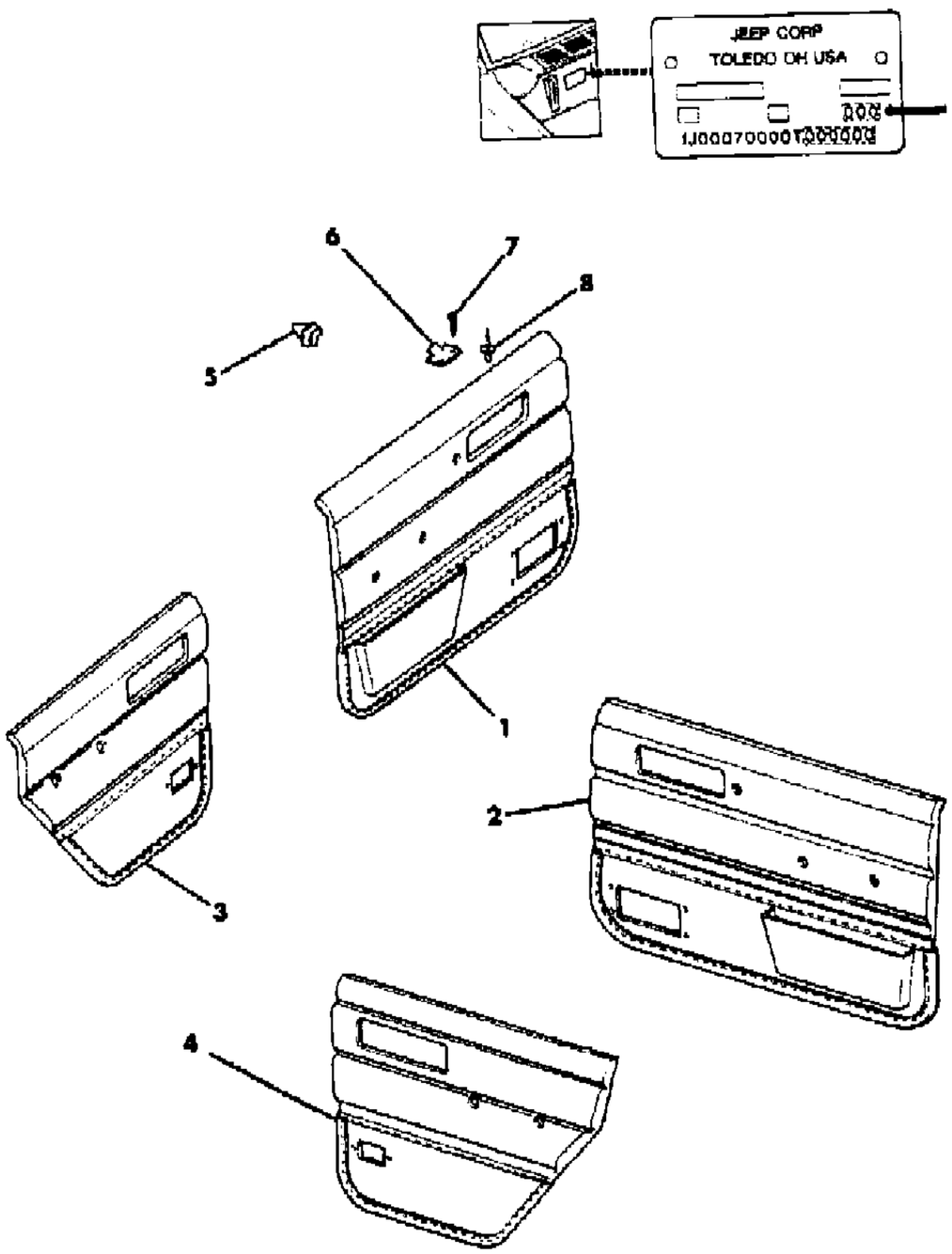

ITEM	PART NUMBER	QTY	BODY	MODEL	DESCRIPTION
1					PANEL, Door Trim
					Trim Codes:
	5500 1785	1			3PX
	5500 1789	1			3QU, 3QV
	5501 0211	1			3QUP, 3QVP
	5500 1793	1			4QU, 4QV
	5500 1797	1			4QW
	5500 1795	1			5QU, 5QV
	5500 1787	1			6PX
	5500 1791	1			6QU, 6QV
	5500 5795	1			9QU, 9QV
	5500 1799	1			9QW
2					PANEL, Door Trim
					Trim Code:
	5500 1784	1			3PX
	5500 1788	1			3QU, 3QV
	5501 0210	1			3QUP, 3QVP
	5500 1792	1			4QU, 4QV
	5500 1796	1			4QW
	5500 1794	1			5QU, 5QV
	5500 1786	1			6PX
	5500 1790	1			6QU, 6QV
	5500 5794	1			9QU, 9QV
	5500 1798	1			9QW
3					PANEL, Door Trim
					Trim Code:
	5500 1801	1			3PX
	5500 1805	1			3QU, 3QV
	5501 0243	1			3QUP, 3QVP
	5500 1809	1			4QU, 4QV
	5500 1813	1			4QW
	5500 1811	1			5QU, 5QV
	5500 1803	1			6PX
	5500 1807	1			6QV, 6QV
	5500 5797	1			9QU, 9QV
	5500 1815	1			9QW
4					PANEL, Door Trim
					Trim Code:
	5500 1800	1			3PX

MODEL CODES

16=Cherokee 2 Dr.(1981-83)	78=Cherokee 4WD-4 Dr.(1984-86)	64=Comanche 2WD-6 Ft. Box(1986)	25=J-10 Truck 7 Ft. Box(1981-84)
17=Cherokee 2 Dr.(1981-83)	85=CJ-5 (1981-83)	66=Comanche 2WD-7 Ft. Box(1986)	26=J10 Truck 8 Ft. Box(1981-86)
73=Cherokee 2WD-2 Dr.(1984-86)	86=CJ-6(1981)	63=Comanche 4WD-6 Ft. Box(1986)	27=J-20 Truck 8 Ft. Box(1981-86)
74=Cherokee 2WD-4 Dr.(1984-86)	87=CJ-7(1981-86)	65=Comanche 4WD-7 Ft. Box(1986)	15=Wagoneer 4 Dr.(1981-83)
18=Cherokee 4 Dr.(1981-83)	88=CJ-8, Scrambler(1981-86)	15=Grand Wagoneer 4 Dr.(1984-86)	75=Wagoneer 4WD-4 Dr.(1984-86)
77=Cherokee 4WD-2 Dr.(1984-86)			

BODY
CJ=CJ-5, CJ-6, CJ-7, CJ-8, Scrambler(1981-86)
MJ=Comanche Pickup(1986)

STYLES
SJ=Wagoneer(1981-83), Grand Wagoneer(1984-86), Cherokee(1981-83), J-10, J-20(1981-86)
XJ=Wagoneer(1984-86), Cherokee(1984-86)

AR = Use as Required - = Non Illustrated Part P.A.R. = Paint as Required

« RETURN TO GROUP INDEX »

PANELS, DOOR TRIM 4 DOOR, 1984-85 XJ CHEROKEE
Figure 47-1500

81J 047 1500

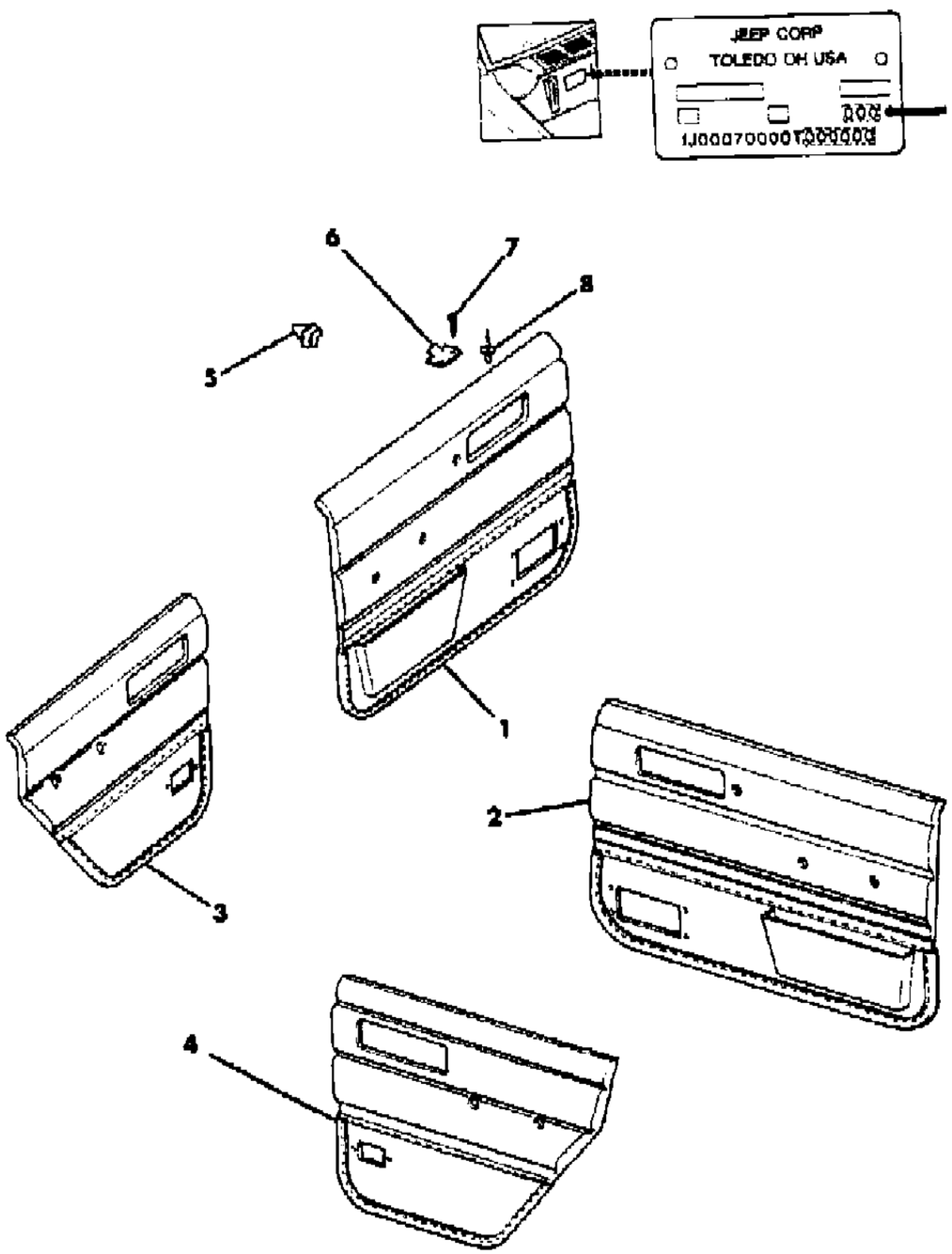

ITEM	PART NUMBER	QTY	BODY	MODEL	DESCRIPTION
	5500 1804	1			3QU, 3QV
	5501 0242	1			3QUP, 3QVP
	5500 1808	1			4QU, 4QV
	5500 1812	1			4QW
	5500 1810	1			5QU, 5QV
	5500 1802	1			6PX
	5500 1806	1			6QU, 6QV
	5500 5796	1			9QU, 9QV
	5500 1814	1			9QW
5	3420 1681	AR			CLIP
6	5500 3629	2			BRACKET, Door Trim
7	3420 1292	4			SCREW
8	3420 1778	4			RIVET

MODEL CODES

16=Cherokee 2 Dr.(1981-83)
17=Cherokee 2 Dr.(1981-83)
73=Cherokee 2WD-2 Dr.(1984-86)
74=Cherokee 2WD-4 Dr.(1984-86)
18=Cherokee 4 Dr.(1981-83)
77=Cherokee 4WD-2 Dr.(1984-86)
78=Cherokee 4WD-4 Dr.(1984-86)
85=CJ-5 (1981-83)
86=CJ-6(1981)
87=CJ-7(1981-86)
88=CJ-8, Scrambler(1981-86)
64=Comanche 2WD-6 Ft. Box(1986)
66=Comanche 2WD-7 Ft. Box(1986)
63=Comanche 4WD-6 Ft. Box(1986)
65=Comanche 4WD-7 Ft. Box(1986)
15=Grand Wagoneer 4 Dr.(1984-86)
25=J-10 Truck 7 Ft. Box(1981-84)
26=J10 Truck 8 Ft. Box(1981-86)
27=J-20 Truck 8 Ft. Box(1981-86)
15=Wagoneer 4 Dr.(1981-83)
75=Wagoneer 4WD-4 Dr.(1984-86)

BODY
CJ=CJ-5, CJ-6, CJ-7, CJ-8, Scrambler(1981-86)
MJ=Comanche Pickup(1986)

STYLES
SJ=Wagoneer(1981-83), Grand Wagoneer(1984-86), Cherokee(1981-83), J-10, J-20(1981-86)
XJ=Wagoneer(1984-86), Cherokee(1984-86)

AR = Use as Required - = Non Illustrated Part P.A.R. = Paint as Required

« RETURN TO GROUP INDEX

PANELS, DOOR TRIM 4 DOOR, 1986 XJ CHEROKEE
Figure 47-1600

81J 047 1600

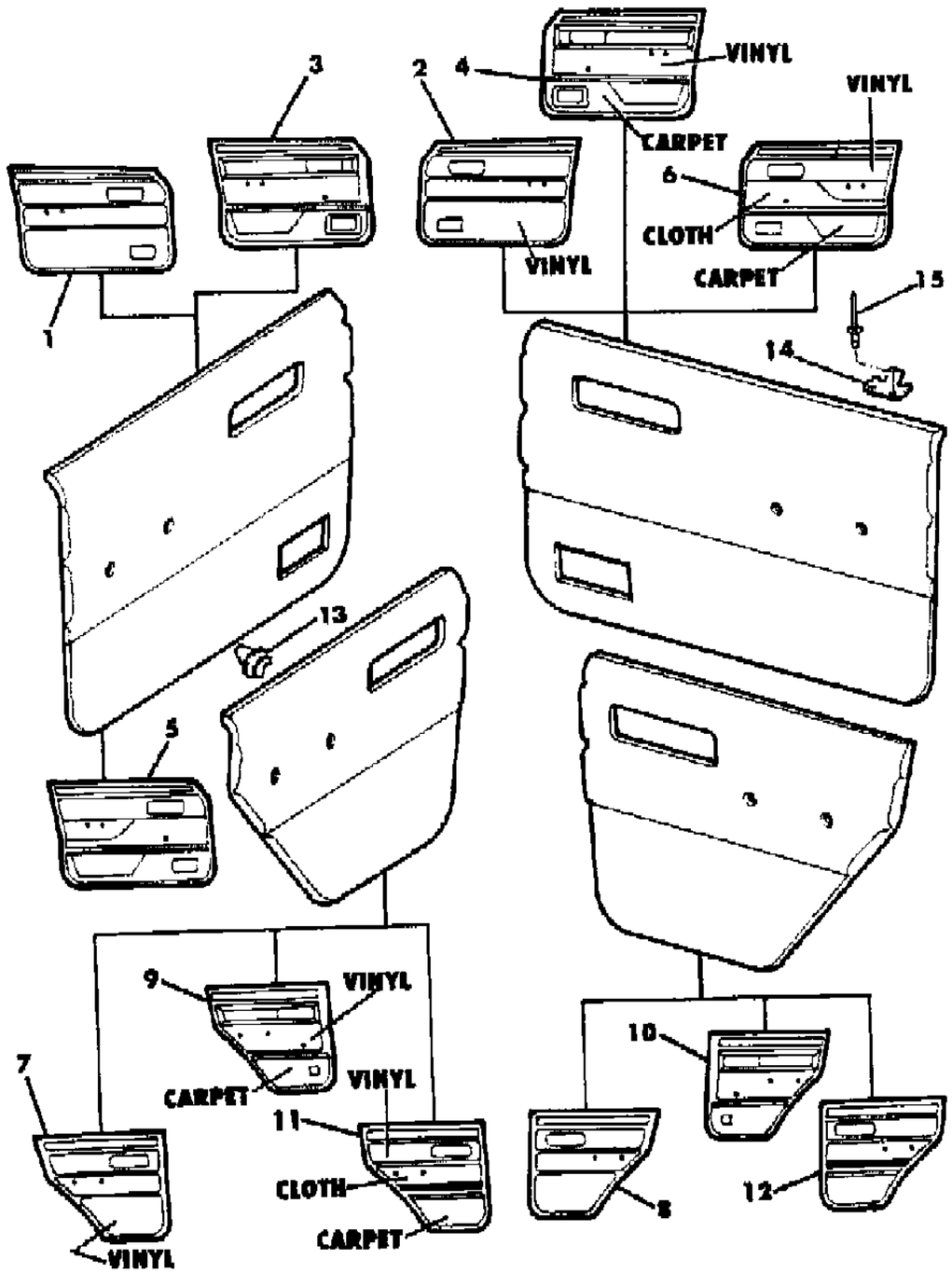

ITEM	PART NUMBER	QTY	BODY	MODEL	DESCRIPTION
1					PANEL, Door Trim
	5500 8007	1			Black
	5500 8013	1			Honey
2					PANEL, Door Trim
	5500 8006	1			Black
	5500 8012	1			Honey
3					PANEL, Door Trim
	5501 0213	1			Black
	5501 0211	1			Med. Blue
	5501 0215	1			Garnet
	5501 0217	1			Honey
4					PANEL, Door Trim
	5501 0212	1			Black
	5501 0210	1			Med. Blue
	5501 0214	1			Garnet
	5501 0216	1			Honey
5					PANEL, Door Trim
	5501 0221	1			Garnet
	5501 0223	1			Honey
6					PANEL, Door Trim
	5501 0220	1			Garnet
	5501 0222	1			Honey
7					PANEL, Door Trim
	5500 8593	1			Black
	5500 8595	1			Honey
8					PANEL, Door Trim
	5500 8592	1			Black
	5500 8594	1			Honey
9					PANEL, Door Trim
	5501 0245	1			Black
	5501 0243	1			Med. Blue
	5501 0247	1			Garnet
	5501 0249	1			Honey
10					PANEL, Door Trim
	5501 0244	1			Black
	5501 0242	1			Med. Blue
	5501 0246	1			Garnet
	5501 0248	1			Honey
11					PANEL, Door Trim

MODEL CODES

16=Cherokee 2 Dr.(1981-83)
17=Cherokee 2 Dr.(1981-83)
73=Cherokee 2WD-2 Dr.(1984-86)
74=Cherokee 2WD-4 Dr.(1984-86)
18=Cherokee 4 Dr.(1981-83)
77=Cherokee 4WD-2 Dr.(1984-86)
78=Cherokee 4WD-4 Dr.(1984-86)
85=CJ-5 (1981-83)
86=CJ-6(1981)
87=CJ-7(1981-86)
88=CJ-8, Scrambler(1981-86)
64=Comanche 2WD-6 Ft. Box(1986)
66=Comanche 2WD-7 Ft. Box(1986)
63=Comanche 4WD-6 Ft. Box(1986)
65=Comanche 4WD-7 Ft. Box(1986)
15=Grand Wagoneer 4 Dr.(1984-86)
25=J-10 Truck 7 Ft. Box(1981-84)
26=J10 Truck 8 Ft. Box(1981-86)
27=J-20 Truck 8 Ft. Box(1981-86)
15=Wagoneer 4 Dr.(1981-83)
75=Wagoneer 4WD-4 Dr.(1984-86)

BODY
CJ=CJ-5, CJ-6, CJ-7, CJ-8, Scrambler(1981-86)
MJ=Comanche Pickup(1986)

STYLES
SJ=Wagoneer(1981-83), Grand Wagoneer(1984-86), Cherokee(1981-83), J-10, J-20(1981-86)
XJ=Wagoneer(1984-86), Cherokee(1984-86)

AR = Use as Required - = Non Illustrated Part P.A.R. = Paint as Required

« RETURN TO GROUP INDEX »

PANELS, DOOR TRIM 4 DOOR, 1986 XJ CHEROKEE
Figure 47-1600

81J 047 1600

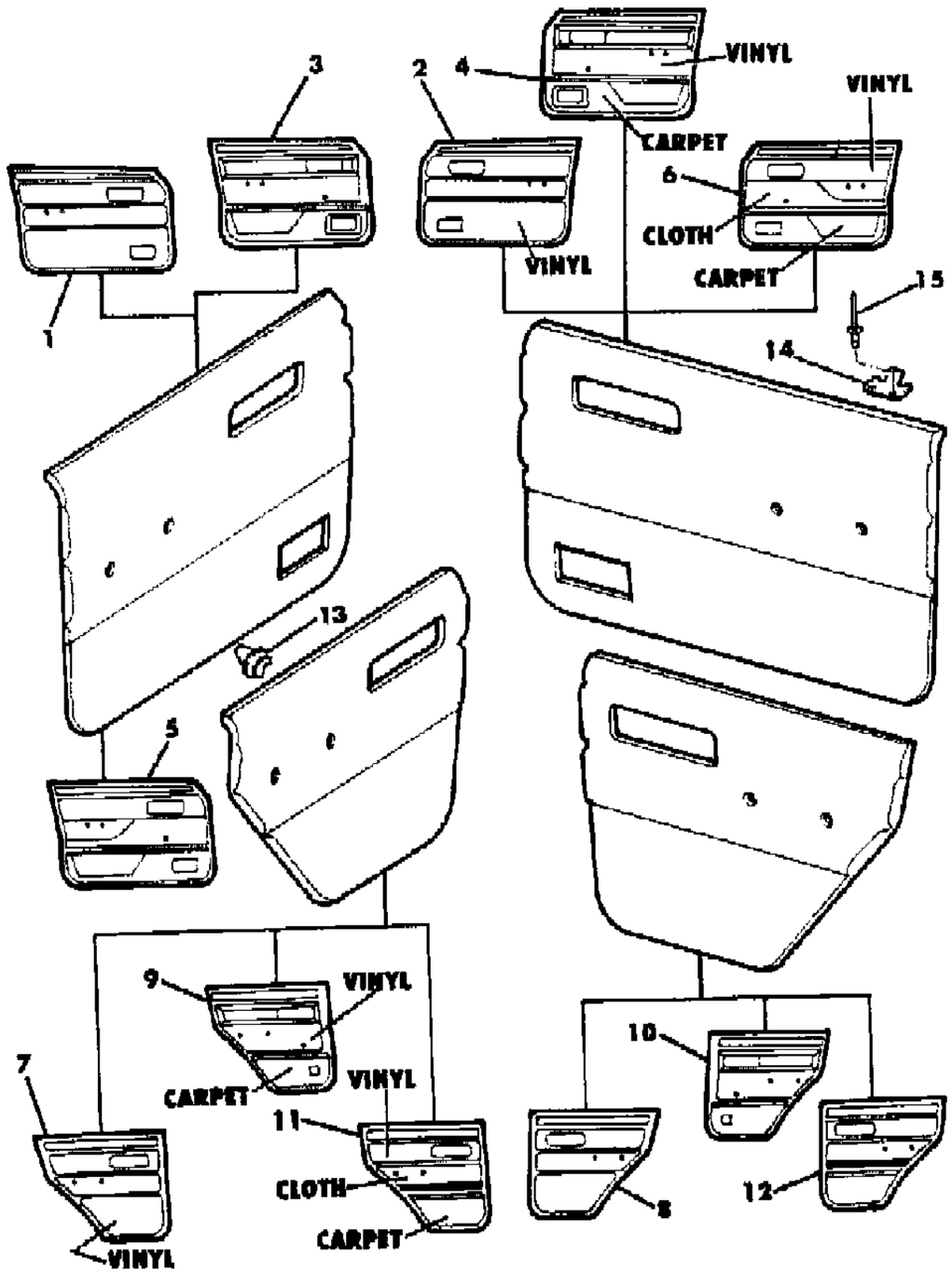

ITEM	PART NUMBER	QTY	BODY	MODEL	DESCRIPTION
	5501 0205	1			Garnet
	5501 0207	1			Honey
12					PANEL, Door Trim
	5501 0204	1			Garnet
	5501 0206	1			Honey
13	3420 1681	AR			CLIP
14	5500 3629	2			BRACKET, Door Trim
15	3420 1778	4			RIVET

MODEL CODES

16=Cherokee 2 Dr.(1981-83)
17=Cherokee 2 Dr.(1981-83)
73=Cherokee 2WD-2 Dr.(1984-86)
74=Cherokee 2WD-4 Dr.(1984-86)
18=Cherokee 4 Dr.(1981-83)
77=Cherokee 4WD-2 Dr.(1984-86)
78=Cherokee 4WD-4 Dr.(1984-86)
85=CJ-5 (1981-83)
86=CJ-6(1981)
87=CJ-7(1981-86)
88=CJ-8, Scrambler(1981-86)
64=Comanche 2WD-6 Ft. Box(1986)
66=Comanche 2WD-7 Ft. Box(1986)
63=Comanche 4WD-6 Ft. Box(1986)
65=Comanche 4WD-7 Ft. Box(1986)
15=Grand Wagoneer 4 Dr.(1984-86)
25=J-10 Truck 7 Ft. Box(1981-84)
26=J10 Truck 8 Ft. Box(1981-86)
27=J-20 Truck 8 Ft. Box(1981-86)
15=Wagoneer 4 Dr.(1981-83)
75=Wagoneer 4WD-4 Dr.(1984-86)

BODY
CJ=CJ-5, CJ-6, CJ-7, CJ-8, Scrambler(1981-86)
MJ=Comanche Pickup(1986)

STYLES
SJ=Wagoneer(1981-83), Grand Wagoneer(1984-86), Cherokee(1981-83), J-10, J-20(1981-86)
XJ=Wagoneer(1984-86), Cherokee(1984-86)

AR = Use as Required - = Non Illustrated Part P.A.R. = Paint as Required

« RETURN TO GROUP INDEX

PANELS, DOOR TRIM 4 DOOR, 1984-85 XJ CHEROKEE
Figure 47-1500

81J 047 1700

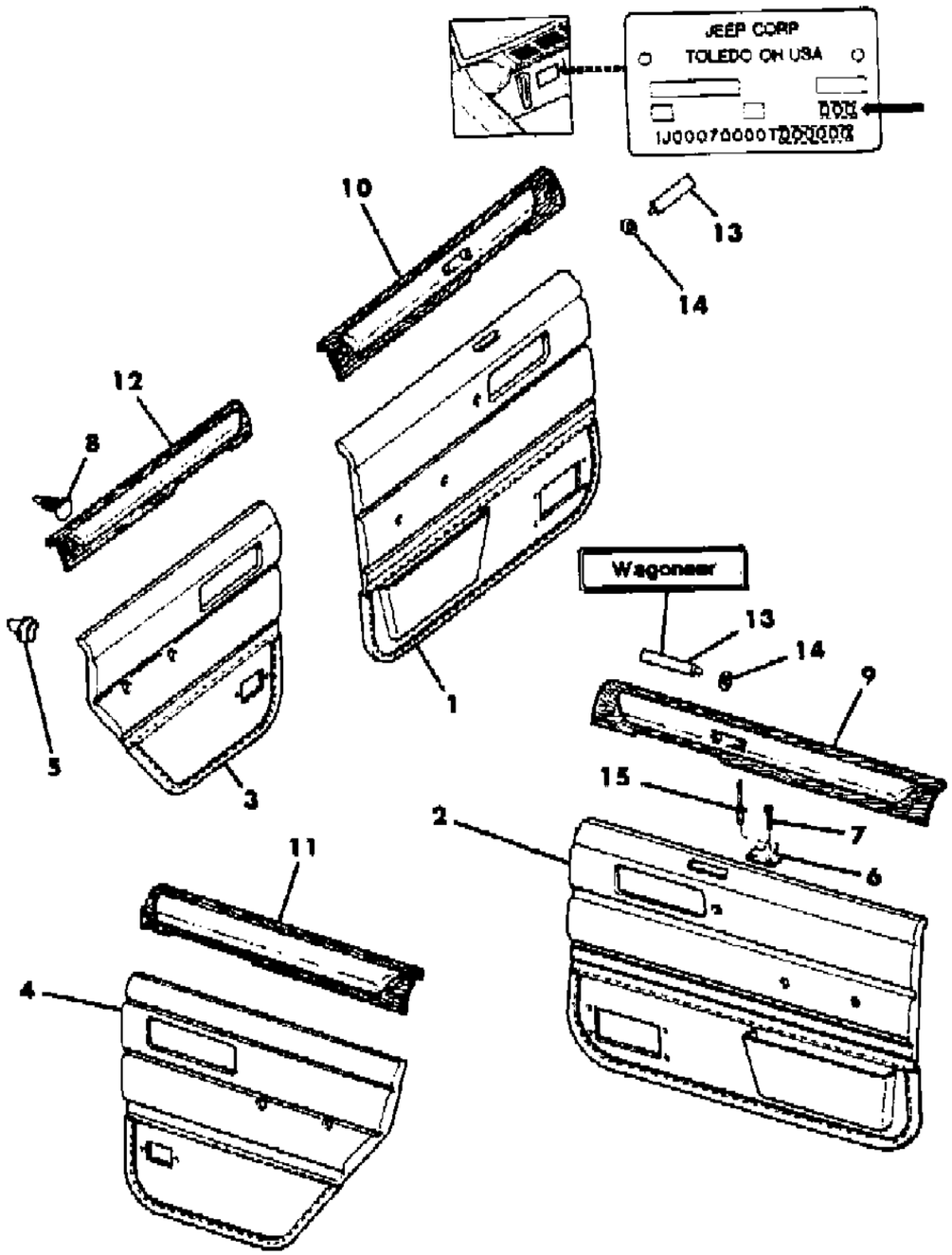

ITEM	PART NUMBER	QTY	BODY	MODEL	DESCRIPTION
1					PANEL, Door Trim
					Wagoneer Base
					Trim Code:
	5500 1771	1			3QC
	5501 0157	1			3QGP
	5500 4775	1			4QG
	5500 4777	1			5QG
	5500 4773	1			6QG
	5500 5815	1			9QG
					Wagoneer Limited
					Trim Code:
	5500 4753	1			4QL
	5500 4755	1			5QL
	5500 5817	1			9QL
2					PANEL, Door Trim
					Wagoneer Base
					Trim Code:
	5500 4770	1			3QG
	5501 0156	1			3QGP
	5500 4774	1			4QG
	5500 4776	1			5QG
	5500 4772	1			6QG
	5500 5814	1			9QG
					Wagoneer Limited
					Trim Code:
	5500 4752	1			4QL
	5500 4754	1			5QL
	5500 5816	1			9QL
3					PANEL, Door Trim
					Wagoneer Base
					Trim Code:
	5500 4779	1			3QG
	5501 0257	1			3QGP
	5500 4783	1			4QG
	5500 4785	1			5QG
	5500 4781	1			6QG
	5500 5819	1			9QG
					Wagoneer Limited
					Trim Code:

MODEL CODES

16=Cherokee 2 Dr.(1981-83)	78=Cherokee 4WD-4 Dr.(1984-86)	64=Comanche 2WD-6 Ft. Box(1986)	25=J-10 Truck 7 Ft. Box(1981-84)
17=Cherokee 2 Dr.(1981-83)	85=CJ-5 (1981-83)	66=Comanche 2WD-7 Ft. Box(1986)	26=J10 Truck 8 Ft. Box(1981-86)
73=Cherokee 2WD-2 Dr.(1984-86)	86=CJ-6(1981)	63=Comanche 4WD-6 Ft. Box(1986)	27=J-20 Truck 8 Ft. Box(1981-86)
74=Cherokee 2WD-4 Dr.(1984-86)	87=CJ-7(1981-86)	65=Comanche 4WD-7 Ft. Box(1986)	15=Wagoneer 4 Dr.(1981-83)
18=Cherokee 4 Dr.(1981-83)	88=CJ-8, Scrambler(1981-86)	15=Grand Wagoneer 4 Dr.(1984-86)	75=Wagoneer 4WD-4 Dr.(1984-86)
77=Cherokee 4WD-2 Dr.(1984-86)			

BODY
CJ=CJ-5, CJ-6, CJ-7, CJ-8, Scrambler(1981-86)
MJ=Comanche Pickup(1986)

STYLES
SJ=Wagoneer(1981-83), Grand Wagoneer(1984-86), Cherokee(1981-83), J-10, J-20(1981-86)
XJ=Wagoneer(1984-86), Cherokee(1984-86)

AR = Use as Required - = Non Illustrated Part P.A.R. = Paint as Required

PANELS, DOOR TRIM 4 DOOR, 1984-85 XJ CHEROKEE
Figure 47-1500

81J 047 1700

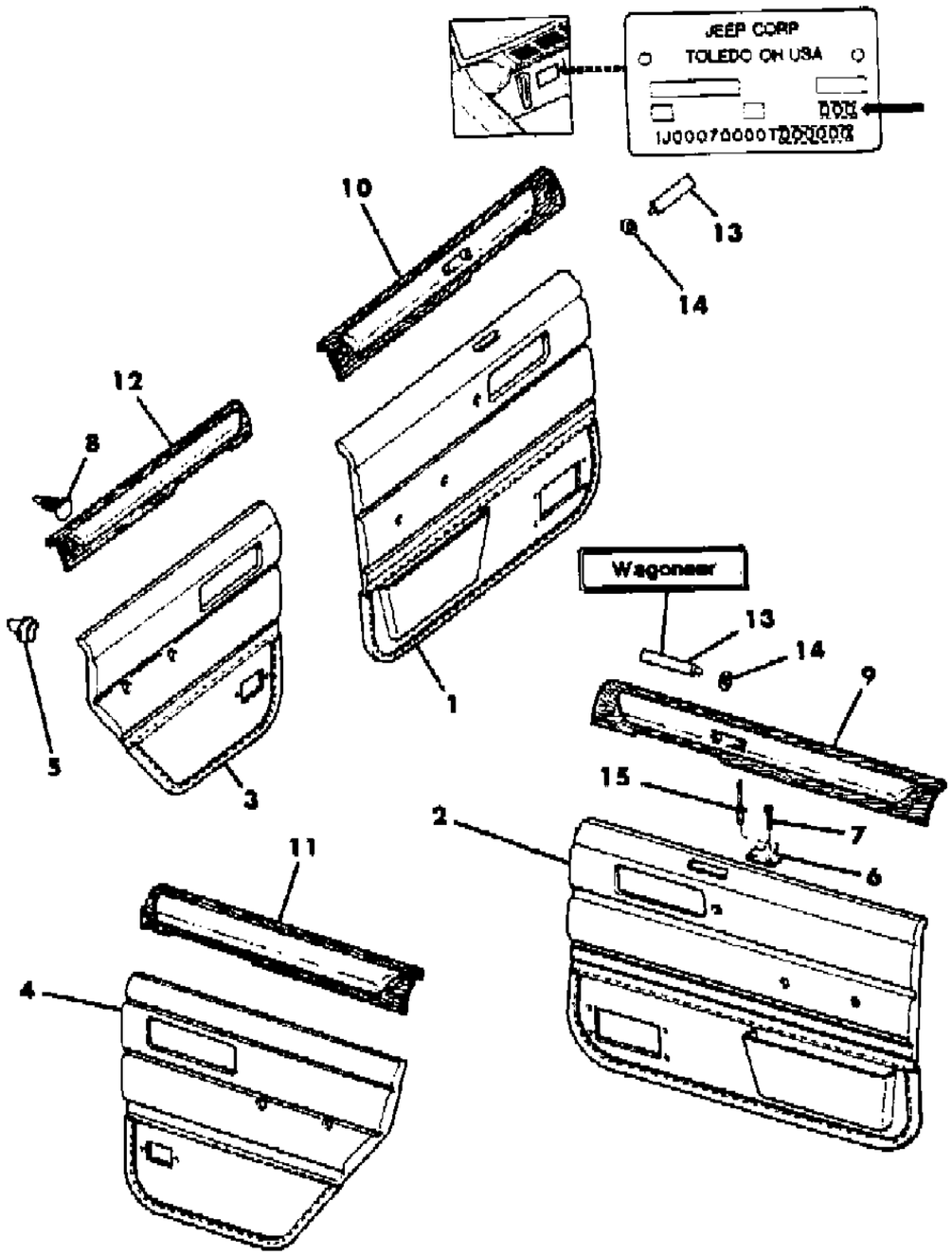

ITEM	PART NUMBER	QTY	BODY	MODEL	DESCRIPTION
	5500 4757	1			4QL
	5500 4759	1			5QL
	5500 5821	1			9QL
4					PANEL, Door Trim
					Wagoneer Base
					Trim Code:
	5500 4778	1			3QG
	5501 0256	1			3QGP
	5500 4782	1			4QG
	5500 4784	1			5QG
	5500 4780	1			6QG
	5500 5818	1			9QG
					Wagoneer Limited
					Trim Code:
	5500 4756	1			4QL
	5500 4758	1			5QL
	5500 5820	1			9QL
5	3420 1681	AR			CLIP
6	5500 3629	2			BRACKET, Door Trim
7	3420 1292	4			SCREW
8	3420 1545	10			CLIP
9					MOULDING, Trim Panel
	5500 4930	1			Garnet
	5500 5826	1			Honey
	5500 4932	1			Nutmeg
10					MOULDING, Trim Panel
	5500 4931	1			Garnet
	5500 5827	1			Honey
	5500 4933	1			Nutmeg
11					MOULDING Trim Panel ***
	5500 4934	1			Garnet
	5500 5828	1			Honey
	5500 4936	1			Nutmeg
12					MOULDING, Trim Panel
	5500 4935	1			Garnet
	5500 5829	1			Honey
	5500 4937	1			Nutmeg
13	5500 3122	2			NAMEPLATE, Wagoneer ***
14	J400 0459	4			NUT

MODEL CODES

16=Cherokee 2 Dr.(1981-83)
17=Cherokee 2 Dr.(1981-83)
73=Cherokee 2WD-2 Dr.(1984-86)
74=Cherokee 2WD-4 Dr.(1984-86)
18=Cherokee 4 Dr.(1981-83)
77=Cherokee 4WD-2 Dr.(1984-86)
78=Cherokee 4WD-4 Dr.(1984-86)
85=CJ-5 (1981-83)
86=CJ-6(1981)
87=CJ-7(1981-86)
88=CJ-8, Scrambler(1981-86)
64=Comanche 2WD-6 Ft. Box(1986)
66=Comanche 2WD-7 Ft. Box(1986)
63=Comanche 4WD-6 Ft. Box(1986)
65=Comanche 4WD-7 Ft. Box(1986)
15=Grand Wagoneer 4 Dr.(1984-86)
25=J-10 Truck 7 Ft. Box(1981-84)
26=J10 Truck 8 Ft. Box(1981-86)
27=J-20 Truck 8 Ft. Box(1981-86)
15=Wagoneer 4 Dr.(1981-83)
75=Wagoneer 4WD-4 Dr.(1984-86)

BODY
CJ=CJ-5, CJ-6, CJ-7, CJ-8, Scrambler(1981-86)
MJ=Comanche Pickup(1986)

STYLES
SJ=Wagoneer(1981-83), Grand Wagoneer(1984-86), Cherokee(1981-83), J-10, J-20(1981-86)
XJ=Wagoneer(1984-86), Cherokee(1984-86)

AR = Use as Required - = Non Illustrated Part P.A.R. = Paint as Required

81J 047 1700

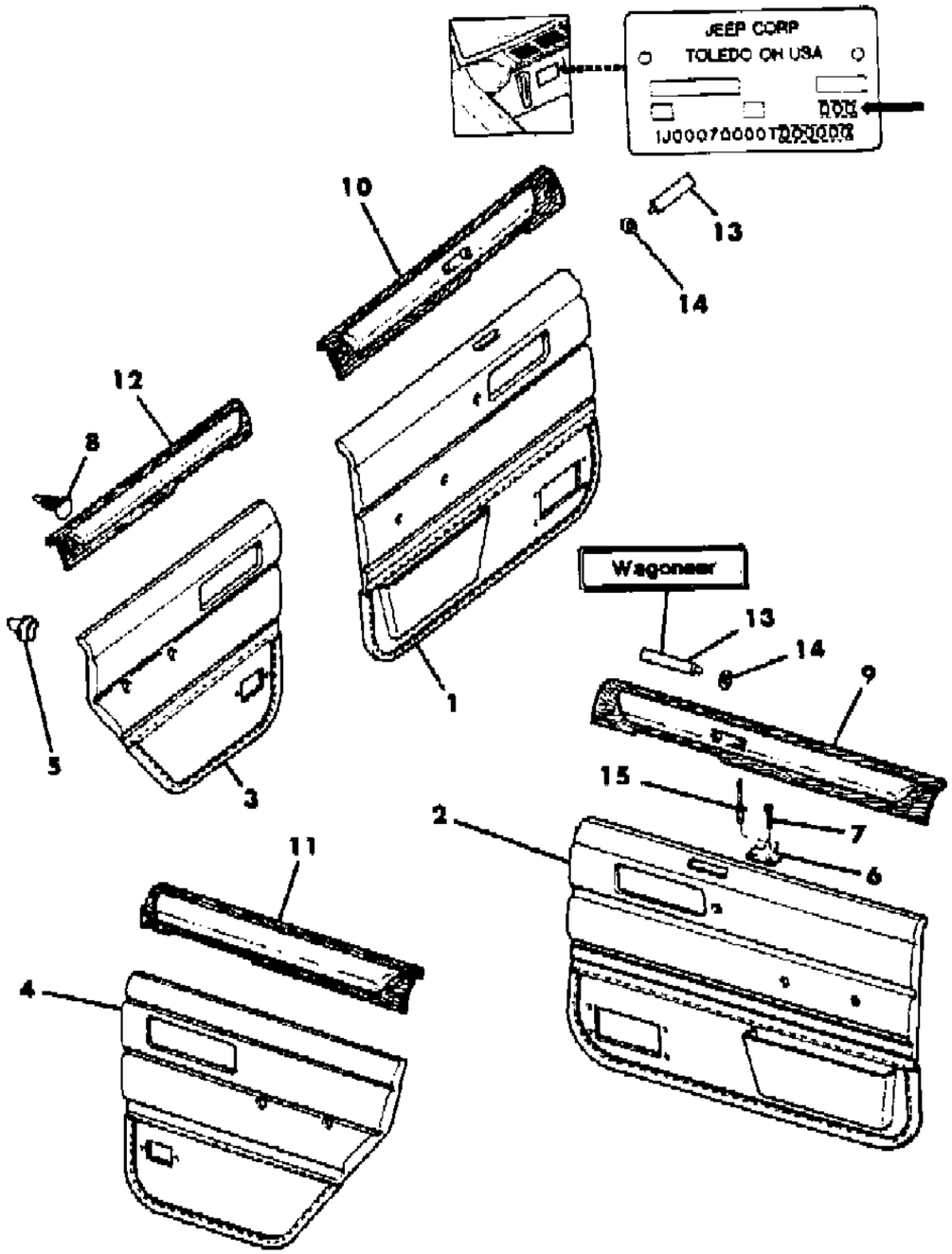

ITEM	PART NUMBER	QTY	BODY	MODEL	DESCRIPTION
15	3420 1778	4			RIVET

MODEL CODES
16=Cherokee 2 Dr.(1981-83)
17=Cherokee 2 Dr.(1981-83)
73=Cherokee 2WD-2 Dr.(1984-86)
74=Cherokee 2WD-4 Dr.(1984-86)
18=Cherokee 4 Dr.(1981-83)
77=Cherokee 4WD-2 Dr.(1984-86)
78=Cherokee 4WD-4 Dr.(1984-86)
85=CJ-5 (1981-83)
86=CJ-6(1981)
87=CJ-7(1981-86)
88=CJ-8, Scrambler(1981-86)
64=Comanche 2WD-6 Ft. Box(1986)
66=Comanche 2WD-7 Ft. Box(1986)
63=Comanche 4WD-6 Ft. Box(1986)
65=Comanche 4WD-7 Ft. Box(1986)
15=Grand Wagoneer 4 Dr.(1984-86)
25=J-10 Truck 7 Ft. Box(1981-84)
26=J10 Truck 8 Ft. Box(1981-86)
27=J-20 Truck 8 Ft. Box(1981-86)
15=Wagoneer 4 Dr.(1981-83)
75=Wagoneer 4WD-4 Dr.(1984-86)

BODY
CJ=CJ-5, CJ-6, CJ-7, CJ-8, Scrambler(1981-86)
MJ=Comanche Pickup(1986)

STYLES
SJ=Wagoneer(1981-83), Grand Wagoneer(1984-86), Cherokee(1981-83), J-10, J-20(1981-86)
XJ=Wagoneer(1984-86), Cherokee(1984-86)

AR = Use as Required - = Non Illustrated Part P.A.R. = Paint as Required

PANELS, DOOR TRIM 4 DOOR, 1986 XJ WAGONEER
Figure 47-1800

81J 047 1800

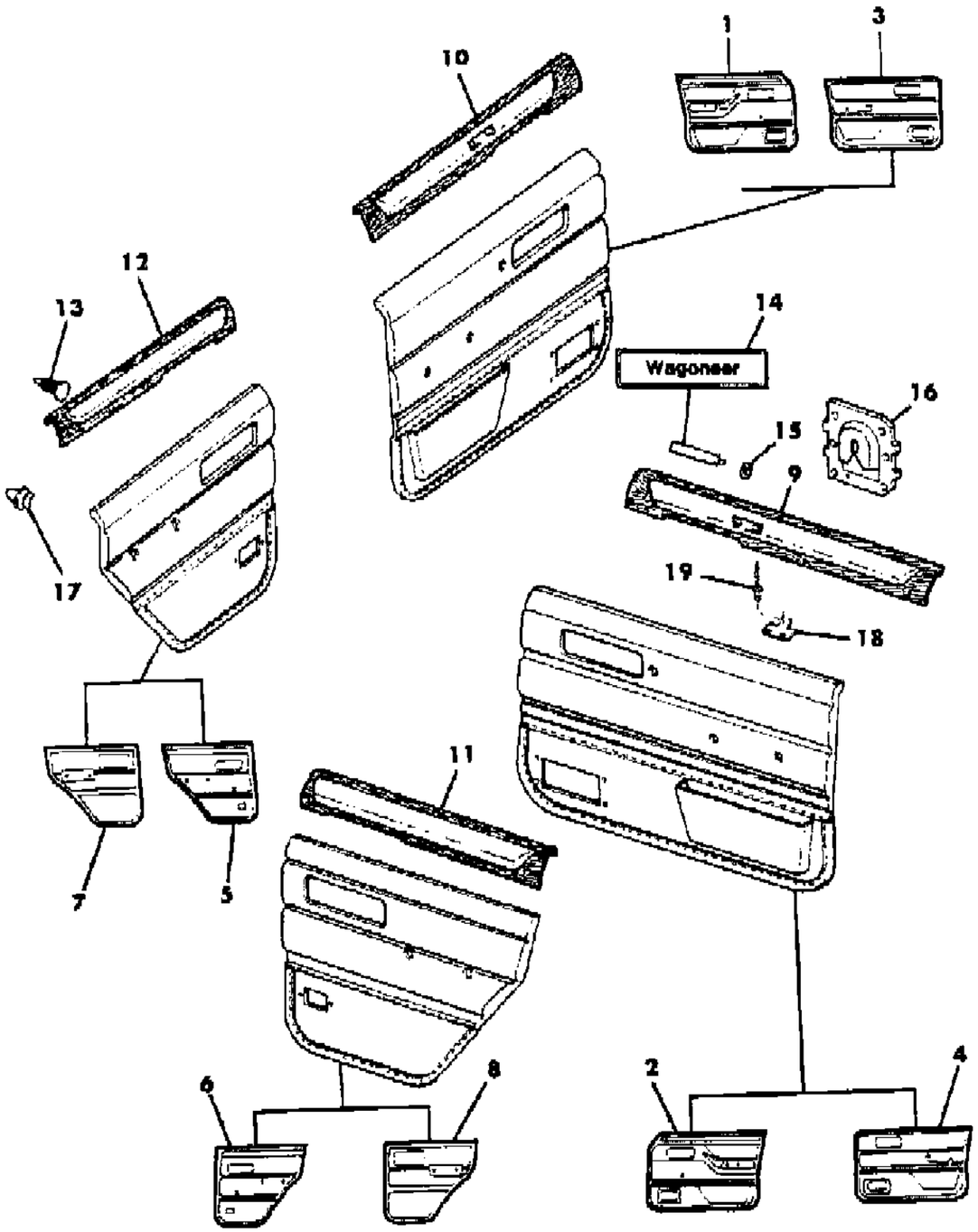

ITEM	PART NUMBER	QTY	BODY	MODEL	DESCRIPTION
1					PANEL, Door Trim
					Wagoneer Base
	5501 0157	1			Medium Blue
	5501 0161	1			Garnet
	5501 0163	1			Honey
2					PANEL, Door Trim
					Wagoneer Base
	5501 0156	1			Medium Blue
	5501 0160	1			Garnet
	5501 0162	1			Honey
3					PANEL, Door Trim
					Wagoneer Limited
	5500 6587	1			Garnet
	5500 5817	1			Honey
4					PANEL, Door Trim
					Wagoneer Limited
	5500 6586	1			Garnet
	5500 5816	1			Honey
5					PANEL, Door Trim
					Wagoneer Base
	5501 0257	1			Medium Blue
	5501 0261	1			Garnet
	5501 0263	1			Honey
6					PANEL, Door Trim
					Wagoneer Base
	5501 0256	1			Medium Blue
	5501 0260	1			Garnet
	5501 0262	1			Honey
7					PANEL, Door Trim
					Wagoneer Limited
	5500 6591	1			Garnet
	5500 5821	1			Honey
8					PANEL, Door Trim
					Wagoneer Limited
	5500 6590	1			Garnet
	5500 5820	1			Honey
9					MOULDING, Trim Panel
					Wagoneer Limited
	5500 4930	1			Garnet

MODEL CODES

16=Cherokee 2 Dr.(1981-83)	78=Cherokee 4WD-4 Dr.(1984-86)	64=Comanche 2WD-6 Ft. Box(1986)	25=J-10 Truck 7 Ft. Box(1981-84)
17=Cherokee 2 Dr.(1981-83)	85=CJ-5 (1981-83)	66=Comanche 2WD-7 Ft. Box(1986)	26=J10 Truck 8 Ft. Box(1981-86)
73=Cherokee 2WD-2 Dr.(1984-86)	86=CJ-6(1981)	63=Comanche 4WD-6 Ft. Box(1986)	27=J-20 Truck 8 Ft. Box(1981-86)
74=Cherokee 2WD-4 Dr.(1984-86)	87=CJ-7(1981-86)	65=Comanche 4WD-7 Ft. Box(1986)	15=Wagoneer 4 Dr.(1981-83)
18=Cherokee 4 Dr.(1981-83)	88=CJ-8, Scrambler(1981-86)	15=Grand Wagoneer 4 Dr.(1984-86)	75=Wagoneer 4WD-4 Dr.(1984-86)
77=Cherokee 4WD-2 Dr.(1984-86)			

BODY
CJ=CJ-5, CJ-6, CJ-7, CJ-8, Scrambler(1981-86)
MJ=Comanche Pickup(1986)

STYLES
SJ=Wagoneer(1981-83), Grand Wagoneer(1984-86), Cherokee(1981-83), J-10, J-20(1981-86)
XJ=Wagoneer(1984-86), Cherokee(1984-86)

AR = Use as Required - = Non Illustrated Part P.A.R. = Paint as Required

PANELS, DOOR TRIM 4 DOOR, 1986 XJ WAGONEER
Figure 47-1800

81J 047 1800

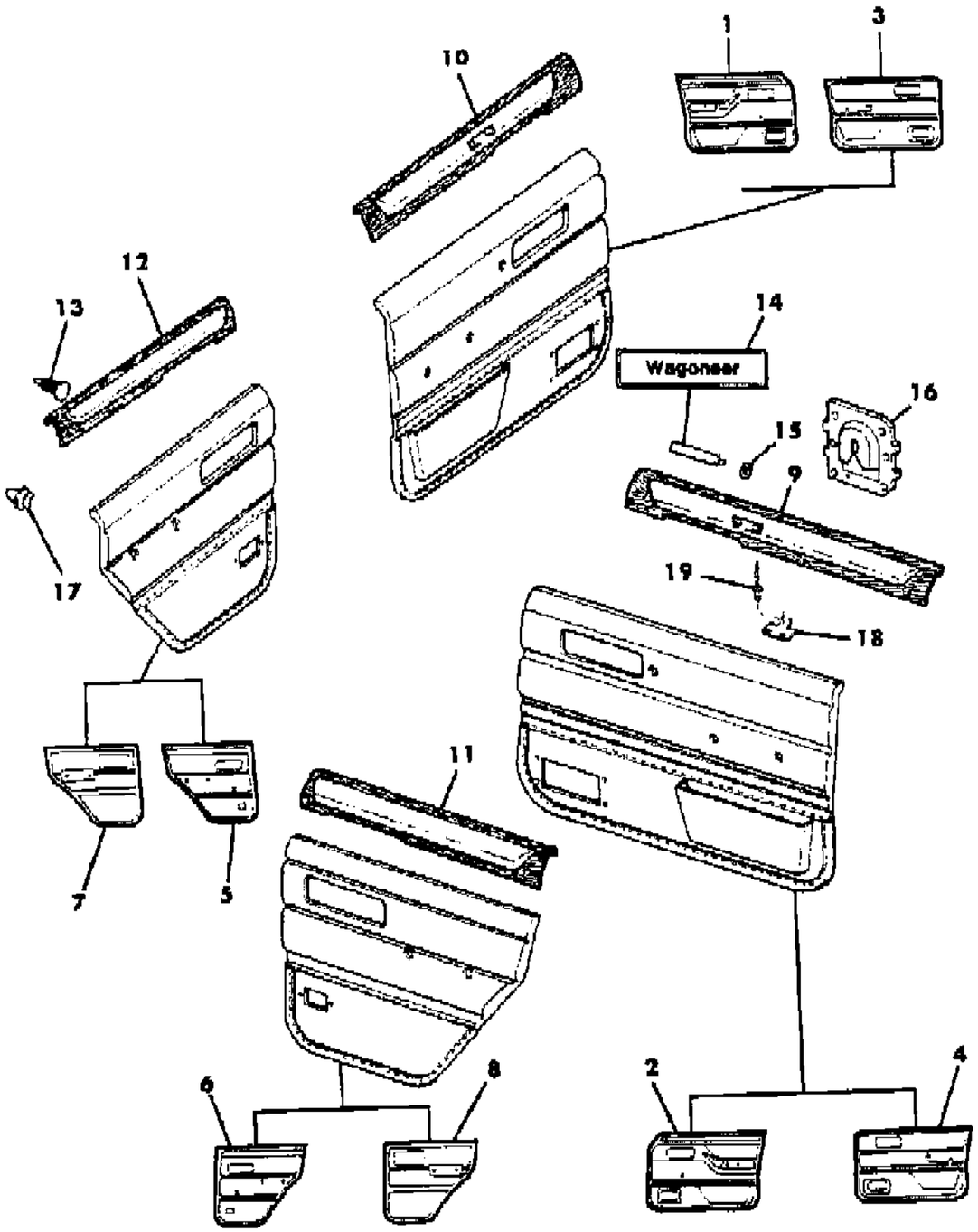

ITEM	PART NUMBER	QTY	BODY	MODEL	DESCRIPTION
	5500 5826	1			Honey
10					MOULDING, Trim Panel
					Wagoneer Limited
	5500 4931	1			Garnet
	5500 5827	1			Honey
11					MOULDING, Trim Panel
					Wagoneer Limited
	5500 4934	1			Garnet
	5500 5828	1			Honey
12					MOULDING, Trim Panel
					Wagoneer Limited
	5500 4935	1			Garnet
	5500 5829	1			Honey
13	3420 1545	10			CLIP
14	5500 3122	2			NAMEPLATE, Wagoneer ***
15	J400 0459	4			NUT
16	3420 1299	2			CLIP, Retaining
17	3420 1681	48			CLIP
18	5500 3629	2			BRACKET, Door Trim
19	3420 1778	4			RIVET

MODEL CODES

16=Cherokee 2 Dr.(1981-83)
17=Cherokee 2 Dr.(1981-83)
73=Cherokee 2WD-2 Dr.(1984-86)
74=Cherokee 2WD-4 Dr.(1984-86)
18=Cherokee 4 Dr.(1981-83)
77=Cherokee 4WD-2 Dr.(1984-86)
78=Cherokee 4WD-4 Dr.(1984-86)
85=CJ-5 (1981-83)
86=CJ-6(1981)
87=CJ-7(1981-86)
88=CJ-8, Scrambler(1981-86)
64=Comanche 2WD-6 Ft. Box(1986)
66=Comanche 2WD-7 Ft. Box(1986)
63=Comanche 4WD-6 Ft. Box(1986)
65=Comanche 4WD-7 Ft. Box(1986)
15=Grand Wagoneer 4 Dr.(1984-86)
25=J-10 Truck 7 Ft. Box(1981-84)
26=J10 Truck 8 Ft. Box(1981-86)
27=J-20 Truck 8 Ft. Box(1981-86)
15=Wagoneer 4 Dr.(1981-83)
75=Wagoneer 4WD-4 Dr.(1984-86)

BODY
CJ=CJ-5, CJ-6, CJ-7, CJ-8, Scrambler(1981-86)
MJ=Comanche Pickup(1986)

STYLES
SJ=Wagoneer(1981-83), Grand Wagoneer(1984-86), Cherokee(1981-83), J-10, J-20(1981-86)
XJ=Wagoneer(1984-86), Cherokee(1984-86)

AR = Use as Required - = Non Illustrated Part P.A.R. = Paint as Required

« RETURN TO GROUP INDEX

PANELS, DOOR TRIM COMANCHE
Figure 47-1900

81J 047 1900

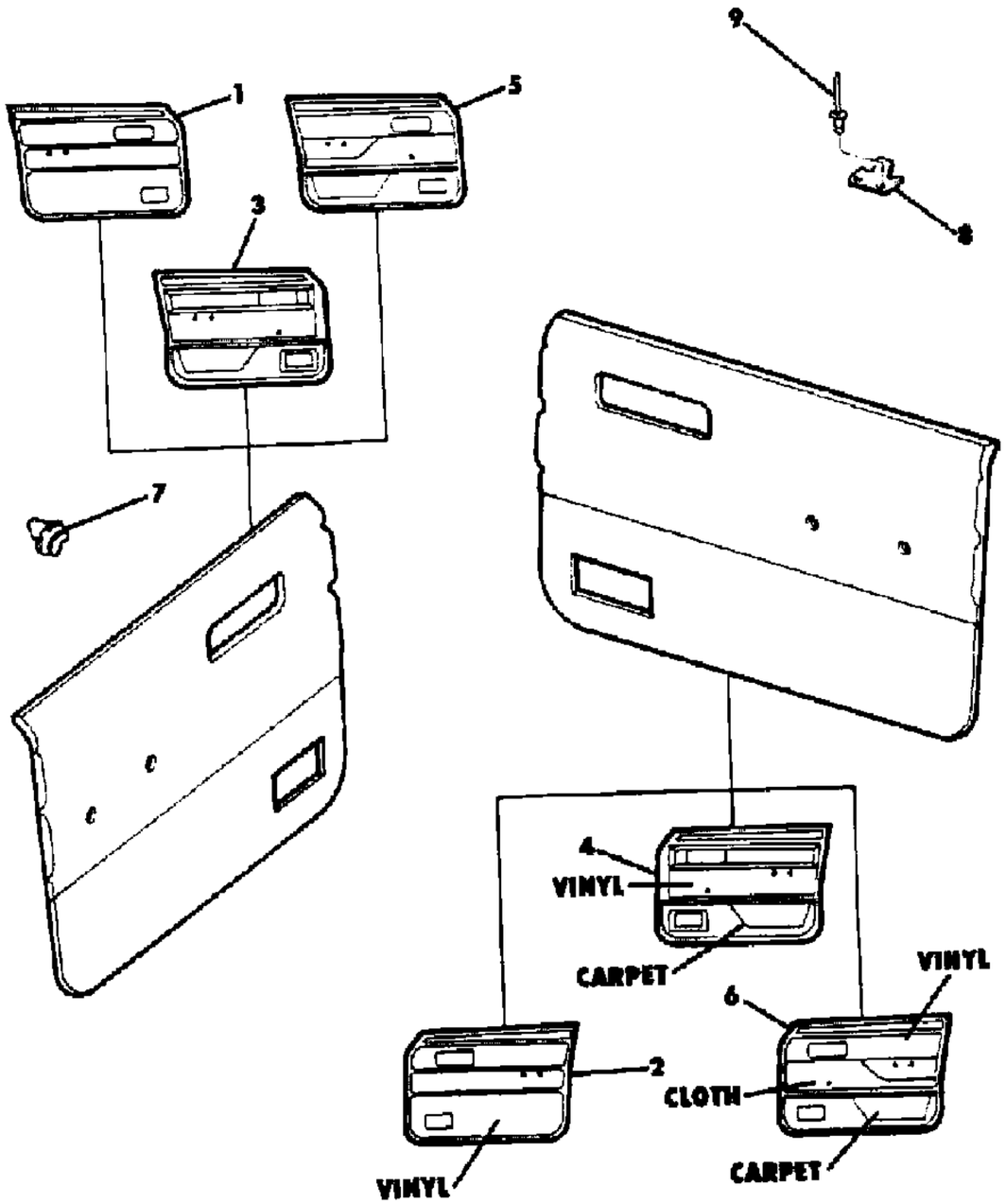

ITEM	PART NUMBER	QTY	BODY	MODEL	DESCRIPTION
1					PANEL, Door Trim
	5500 8007	1			Black
	5500 8009	1			Medium Blue
	5501 3467	1			Cordovan
	5500 8011	1			Garnet
	5500 8013	1			Honey
	5501 2383	1			Tan
2					PANEL, Door Trim
	5500 8006	1			Black
	5500 8008	1			Medium Blue
	5501 3466	1			Cordovan
	5500 8010	1			Garnet
	5500 8012	1			Honey
	5501 2382	1			Tan
3					PANEL, Door Trim
	5501 0213	1			Black
	5501 0211	1			Medium Blue
	5501 0215	1			Garnet
	5501 0217	1			Honey
4					PANEL, Door Trim
	5501 0212	1			Black
	5501 0210	1			Medium Blue
	5501 0214	1			Garnet
	5501 0216	1			Honey
5					PANEL, Door Trim
	5501 2407	1			Cordovan
	5501 0221	1			Garnet
	5501 0223	1			Honey
	5501 2409	1			Tan
6					PANEL, Door Trim
	5501 2406	1			Cordovan
	5501 0220	1			Garnet
	5501 0222	1			Honey
	5501 2408	1			Tan
7	3420 1681	26			CLIP
8	5500 3629	2			BRACKET, Door Trim
9	3420 1778	4			RIVET

MODEL CODES

16=Cherokee 2 Dr.(1981-83)
17=Cherokee 2 Dr.(1981-83)
73=Cherokee 2WD-2 Dr.(1984-86)
74=Cherokee 2WD-4 Dr.(1984-86)
18=Cherokee 4 Dr.(1981-83)
77=Cherokee 4WD-2 Dr.(1984-86)
78=Cherokee 4WD-4 Dr.(1984-86)
85=CJ-5 (1981-83)
86=CJ-6(1981)
87=CJ-7(1981-86)
88=CJ-8, Scrambler(1981-86)
64=Comanche 2WD-6 Ft. Box(1986)
66=Comanche 2WD-7 Ft. Box(1986)
63=Comanche 4WD-6 Ft. Box(1986)
65=Comanche 4WD-7 Ft. Box(1986)
15=Grand Wagoneer 4 Dr.(1984-86)
25=J-10 Truck 7 Ft. Box(1981-84)
26=J10 Truck 8 Ft. Box(1981-86)
27=J-20 Truck 8 Ft. Box(1981-86)
15=Wagoneer 4 Dr.(1981-83)
75=Wagoneer 4WD-4 Dr.(1984-86)

BODY
CJ=CJ-5, CJ-6, CJ-7, CJ-8, Scrambler(1981-86)
MJ=Comanche Pickup(1986)

STYLES
SJ=Wagoneer(1981-83), Grand Wagoneer(1984-86), Cherokee(1981-83), J-10, J-20(1981-86)
XJ=Wagoneer(1984-86), Cherokee(1984-86)

AR = Use as Required - = Non Illustrated Part P.A.R. = Paint as Required

« RETURN TO GROUP INDEX

INTERIOR TRIM PARTS 2 DOOR, 4 DOOR XJ CHEROKEE, XJ WAGONEER, COMANCHE
Figure 47-2000

81J 047 2000

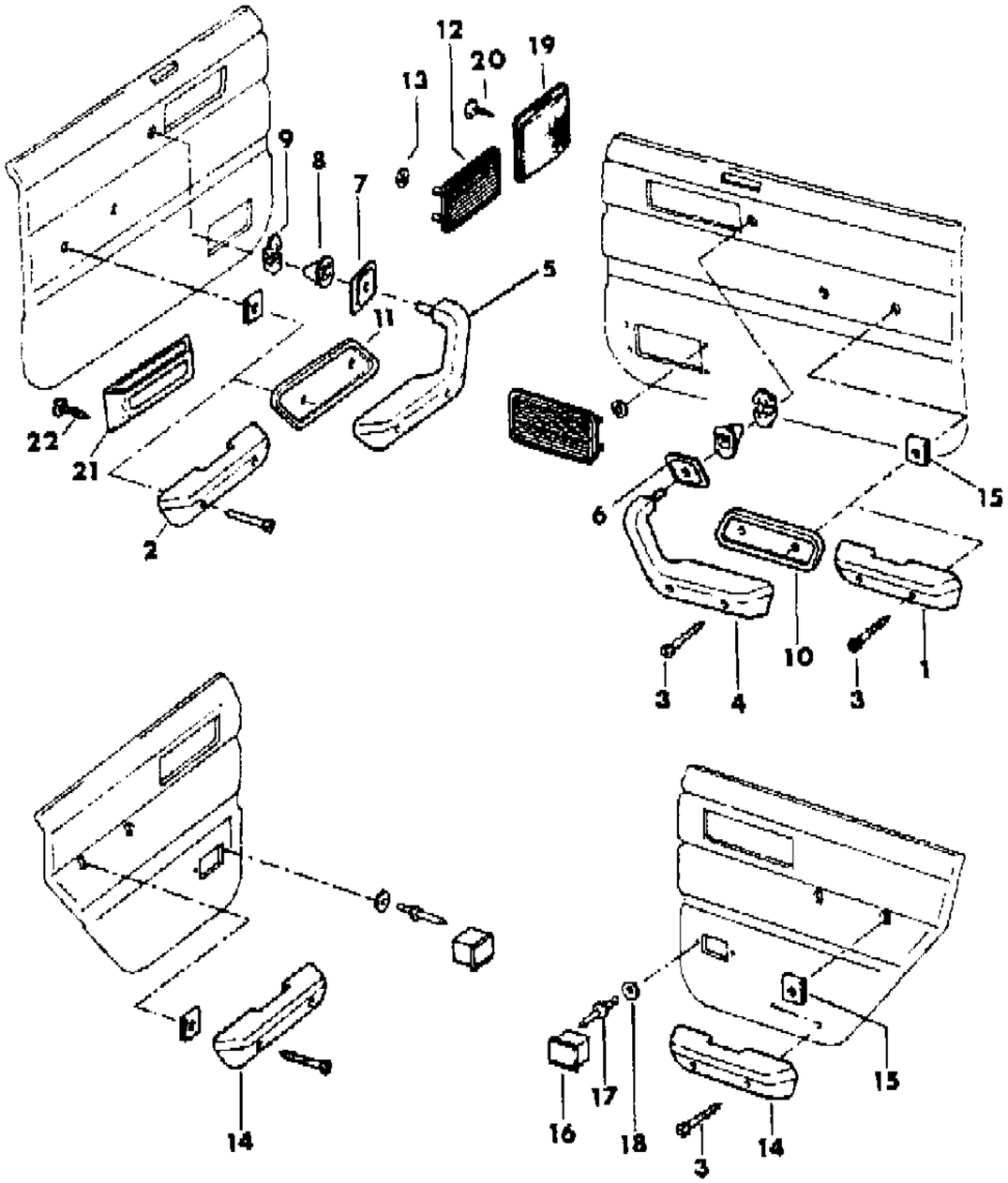

ITEM	PART NUMBER	QTY	BODY	MODEL	DESCRIPTION
1					ARMREST
	3500 1185	1			Almond, 1984-85
	3501 3737	1			Black, 1986
	3500 8334	1			Medium Blue, 1986
	5500 2015	1			Slate Blue, 1984-85
	3501 9989	1			Cordovan, 1986
	3501 3739	1			Garnet, 1986
	3501 3741	1			Honey, 1986
	3500 9215	1			Tan, 1986
2					ARMREST
	3500 1184	1			Almond, 1984-85
	3501 3736	1			Black, 1986
	3500 8331	1			Medium Blue, 1986
	5500 2014	1			Slate Blue, 1984-85
	3501 9988	1			Cordovan, 1986
	3501 3738	1			Garnet, 1986
	3501 3740	1			Honey, 1986
	3500 9214	1			Tan, 1986
3					SCREW
	1150 0068	8			4 Door
	1150 0068	4			2 Door
4					ARMREST
	3500 1176	1			Almond, 1984-85
	3501 3750	1			Black, 1986
	3500 8332	1			Medium Blue, 1984-86
	5500 2018	1			Slate Blue, 1984-85
	3501 5844	1			Cordovan, 1986
	3500 1178	1			Garnet, 1984-86
	3500 5610	1			Honey, 1984-86
	3500 1180	1			Nutmeg, 1984-85
	3500 9210	1			Tan, 1986
5					ARMREST
	3500 1177	1			Almond, 1984-85
	3501 3751	1			Black, 1986
	3500 8333	1			Medium Blue, 1984-86
	5500 2019	1			Slate Blue, 1984-85
	3501 5845	1			Cordovan, 1986
	3500 1179	1			Garnet, 1984-86
	3500 5611	1			Honey, 1984-86

MODEL CODES

16=Cherokee 2 Dr.(1981-83)	78=Cherokee 4WD-4 Dr.(1984-86)	64=Comanche 2WD-6 Ft. Box(1986)	25=J-10 Truck 7 Ft. Box(1981-84)
17=Cherokee 2 Dr.(1981-83)	85=CJ-5 (1981-83)	66=Comanche 2WD-7 Ft. Box(1986)	26=J10 Truck 8 Ft. Box(1981-86)
73=Cherokee 2WD-2 Dr.(1984-86)	86=CJ-6(1981)	63=Comanche 4WD-6 Ft. Box(1986)	27=J-20 Truck 8 Ft. Box(1981-86)
74=Cherokee 2WD-4 Dr.(1984-86)	87=CJ-7(1981-86)	65=Comanche 4WD-7 Ft. Box(1986)	15=Wagoneer 4 Dr.(1981-83)
18=Cherokee 4 Dr.(1981-83)	88=CJ-8, Scrambler(1981-86)	15=Grand Wagoneer 4 Dr.(1984-86)	75=Wagoneer 4WD-4 Dr.(1984-86)
77=Cherokee 4WD-2 Dr.(1984-86)			

BODY
CJ=CJ-5, CJ-6, CJ-7, CJ-8, Scrambler(1981-86)
MJ=Comanche Pickup(1986)

STYLES
SJ=Wagoneer(1981-83), Grand Wagoneer(1984-86), Cherokee(1981-83), J-10, J-20(1981-86)
XJ=Wagoneer(1984-86), Cherokee(1984-86)

AR = Use as Required - = Non Illustrated Part P.A.R. = Paint as Required

INTERIOR TRIM PARTS 2 DOOR, 4 DOOR XJ CHEROKEE, XJ WAGONEER, COMANCHE
Figure 47-2000

81J 047 2000

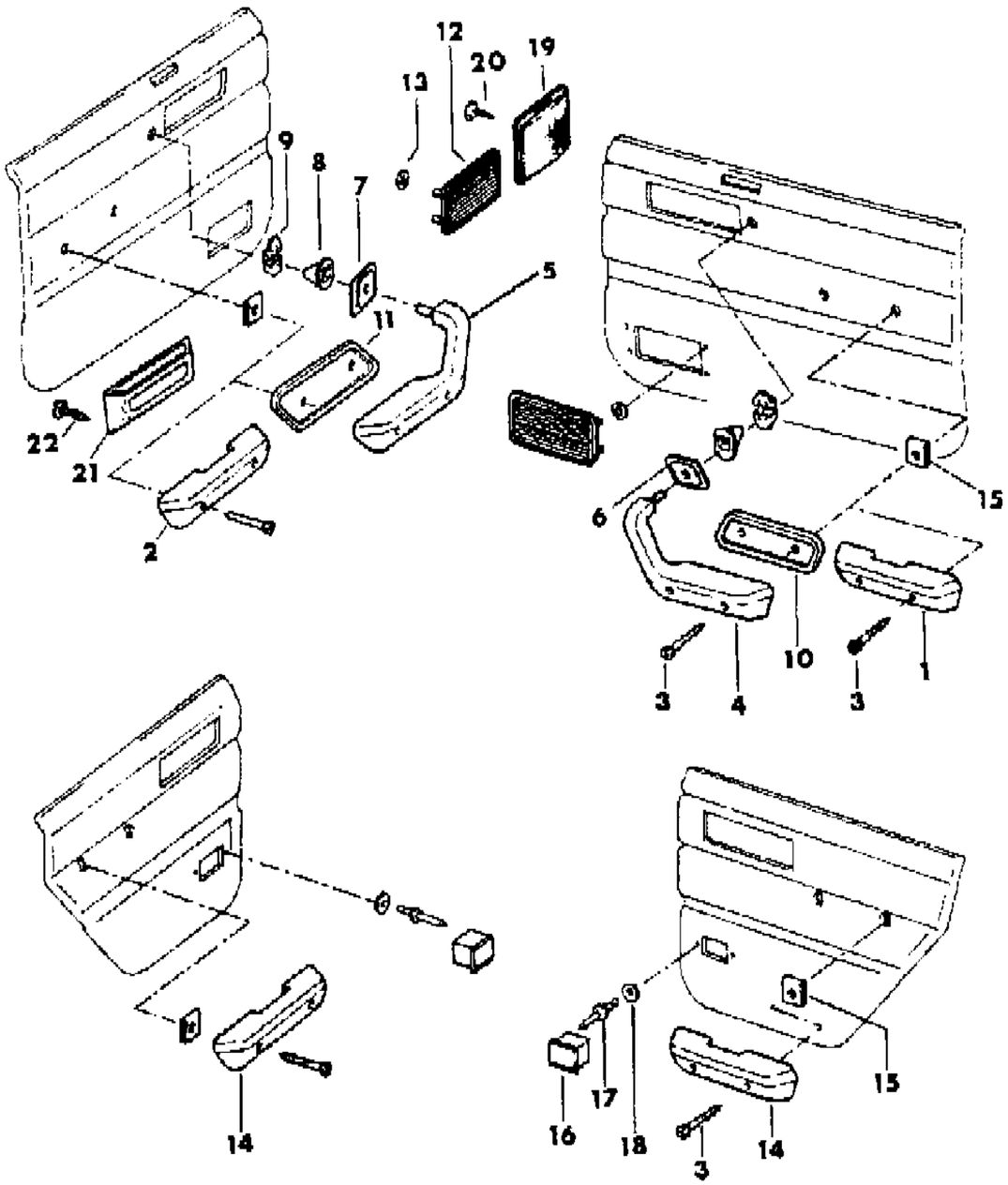

ITEM	PART NUMBER	QTY	BODY	MODEL	DESCRIPTION
	3500 1181	1			Nutmeg, 1984-85
	3500 9211	1			Tan, 1986
6	5500 3128	1			BEZEL, Armrest
7	5500 3129	1			BEZEL, Armrest
8	J307 7045	2			NIPPLE, Armrest ***
9	J307 6062	2			CLIP
10	3500 1916	1			ESCUTCHEON, Armrest
11	3500 1917	1			ESCUTCHEON, Armrest
12					GRILLE, Speaker
	3500 2017	2			Prime Paint, P.A.R.
13	J400 0271	8			FASTENER
14					ARMREST
	5500 2026	2			Almond, 1984-85
	5500 8083	2			Black, 1986
	5500 8082	2			Medium Blue, 1984-86
	5500 2024	2			Slate Blue, 1984-85
	5501 1854	2			Cordovan, 1986
	5500 2028	2			Garnet, 1984-86
	5500 5834	2			Honey, 1984-86
	5500 2030	2			Nutmeg, 1984-85
	5500 9646	2			Tan, 1986
15					NUT
	J308 1009	8			4 Door
	J308 1009	4			2 Door
16	5500 2759	2			ASHTRAY, P.A.R. ***
17	3420 1197	4			RIVET
18	1150 0348	4			WASHER
19					GRILLE, Speaker, 1986
	3501 4012	2			Black
	3501 4000	2			Medium Blue
	3501 6858	2			Cordovan
	3501 4002	2			Garnet
	3501 4013	2			Honey
	3501 4001	2			Tan
20	3420 2419	8			SCREW
21	3500 7556	2			PANEL, Stowage Bin, P.A.R.
22	3420 2074	10			SCREW

MODEL CODES

16=Cherokee 2 Dr.(1981-83)
17=Cherokee 2 Dr.(1981-83)
73=Cherokee 2WD-2 Dr.(1984-86)
74=Cherokee 2WD-4 Dr.(1984-86)
18=Cherokee 4 Dr.(1981-83)
77=Cherokee 4WD-2 Dr.(1984-86)
78=Cherokee 4WD-4 Dr.(1984-86)
85=CJ-5 (1981-83)
86=CJ-6(1981)
87=CJ-7(1981-86)
88=CJ-8, Scrambler(1981-86)
64=Comanche 2WD-6 Ft. Box(1986)
66=Comanche 2WD-7 Ft. Box(1986)
63=Comanche 4WD-6 Ft. Box(1986)
65=Comanche 4WD-7 Ft. Box(1986)
15=Grand Wagoneer 4 Dr.(1984-86)
25=J-10 Truck 7 Ft. Box(1981-84)
26=J10 Truck 8 Ft. Box(1981-86)
27=J-20 Truck 8 Ft. Box(1981-86)
15=Wagoneer 4 Dr.(1981-83)
75=Wagoneer 4WD-4 Dr.(1984-86)

BODY
CJ=CJ-5, CJ-6, CJ-7, CJ-8, Scrambler(1981-86)
MJ=Comanche Pickup(1986)

STYLES
SJ=Wagoneer(1981-83), Grand Wagoneer(1984-86), Cherokee(1981-83), J-10, J-20(1981-86)
XJ=Wagoneer(1984-86), Cherokee(1984-86)

AR = Use as Required - = Non Illustrated Part P.A.R. = Paint as Required

FRAME AND PAD 2 DOOR WAGON AND TRUCK XJ CHEROKEE AND COMANCHE
Figure 47-2100

81J 047 2100

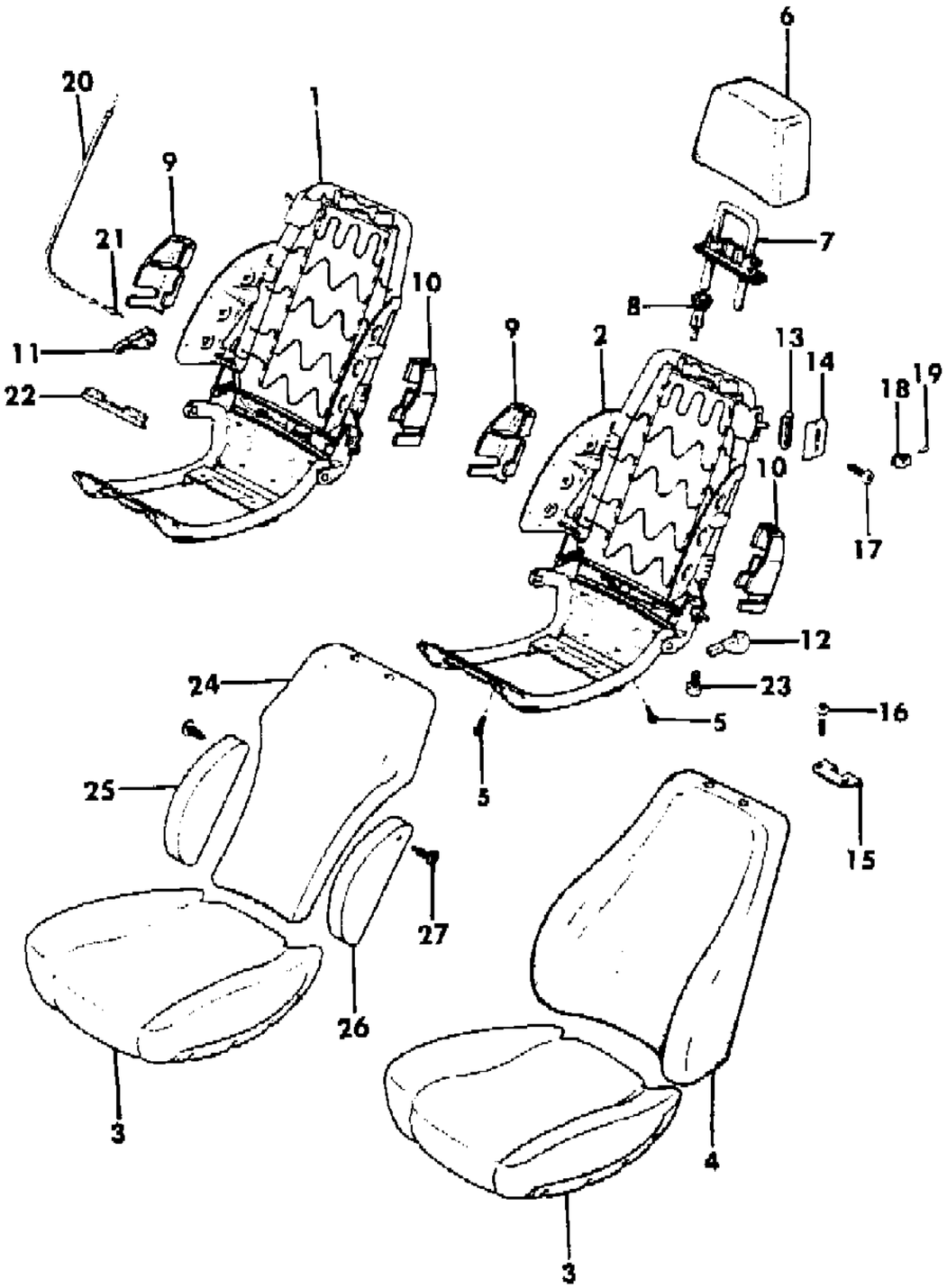

ITEM	PART NUMBER	QTY	BODY	MODEL	DESCRIPTION
1					FRAME, Seat
					w/o Reclining Seat Back
	3500 2940	1			1984-85
	3500 7342	1			1986
					w/Reclining Seat Back
	5500 3664	1			1984-85
	5500 5670	1			1986
2					FRAME, Seat
					w/o Reclining Seat Back
	3500 2941	1			1984-85
	3500 7343	1			1986
					w/Reclining Seat Back
	5500 3665	1			1984-85
	5500 5671	1			1986
3	3500 0762	2			PAD, Cushion
4	3500 2769	2			PAD, Back
5	1150 4735	8			BOLT
6	3500 1690	2			PAD, Headrest
7	3500 3669	2			POST, Headrest ***
8					CYLINDER, Headrest
	T064 6133	4			1984-85
	T134 9642	4			1986
9	3500 4712	2			COVER, Bracket
10	3500 4713	2			COVER, Bracket
11	3500 3686	1			HANDLE, Recliner
12	3500 2930	1			HANDLE, Recliner
13	3500 3645	2			GASKET, Lever
14					BEZEL, Back Lever
	3500 3251	2			Almond, 1984-85
	3500 8340	2			Medium Blue, 1984-85
	5500 5455	2			Slate Blue, 1984-85
	3500 3252	2			Garnet, 1984-85
	3500 6863	2			Honey, 1984-85
	5500 5456	2			Nutmeg, 1984-85
	3500 6863	2			P.A.R., 1986
15	3500 3105	2			BEZEL, Lock
16	3420 1487	4			SCREW
17	3420 1466	4			SCREW
18	5500 2897	2			KNOB, Seat Latch, P.A.R.

MODEL CODES

16=Cherokee 2 Dr.(1981-83)
17=Cherokee 2 Dr.(1981-83)
73=Cherokee 2WD-2 Dr.(1984-86)
74=Cherokee 2WD-4 Dr.(1984-86)
18=Cherokee 4 Dr.(1981-83)
77=Cherokee 4WD-2 Dr.(1984-86)
78=Cherokee 4WD-4 Dr.(1984-86)
85=CJ-5 (1981-83)
86=CJ-6(1981)
87=CJ-7(1981-86)
88=CJ-8, Scrambler(1981-86)
64=Comanche 2WD-6 Ft. Box(1986)
66=Comanche 2WD-7 Ft. Box(1986)
63=Comanche 4WD-6 Ft. Box(1986)
65=Comanche 4WD-7 Ft. Box(1986)
15=Grand Wagoneer 4 Dr.(1984-86)
25=J-10 Truck 7 Ft. Box(1981-84)
26=J10 Truck 8 Ft. Box(1981-86)
27=J-20 Truck 8 Ft. Box(1981-86)
15=Wagoneer 4 Dr.(1981-83)
75=Wagoneer 4WD-4 Dr.(1984-86)

BODY
CJ=CJ-5, CJ-6, CJ-7, CJ-8, Scrambler(1981-86)
MJ=Comanche Pickup(1986)

STYLES
SJ=Wagoneer(1981-83), Grand Wagoneer(1984-86), Cherokee(1981-83), J-10, J-20(1981-86)
XJ=Wagoneer(1984-86), Cherokee(1984-86)

AR = Use as Required - = Non Illustrated Part P.A.R. = Paint as Required

FRAME AND PAD 2 DOOR WAGON AND TRUCK XJ CHEROKEE AND COMANCHE
Figure 47-2100

81J 047 2100

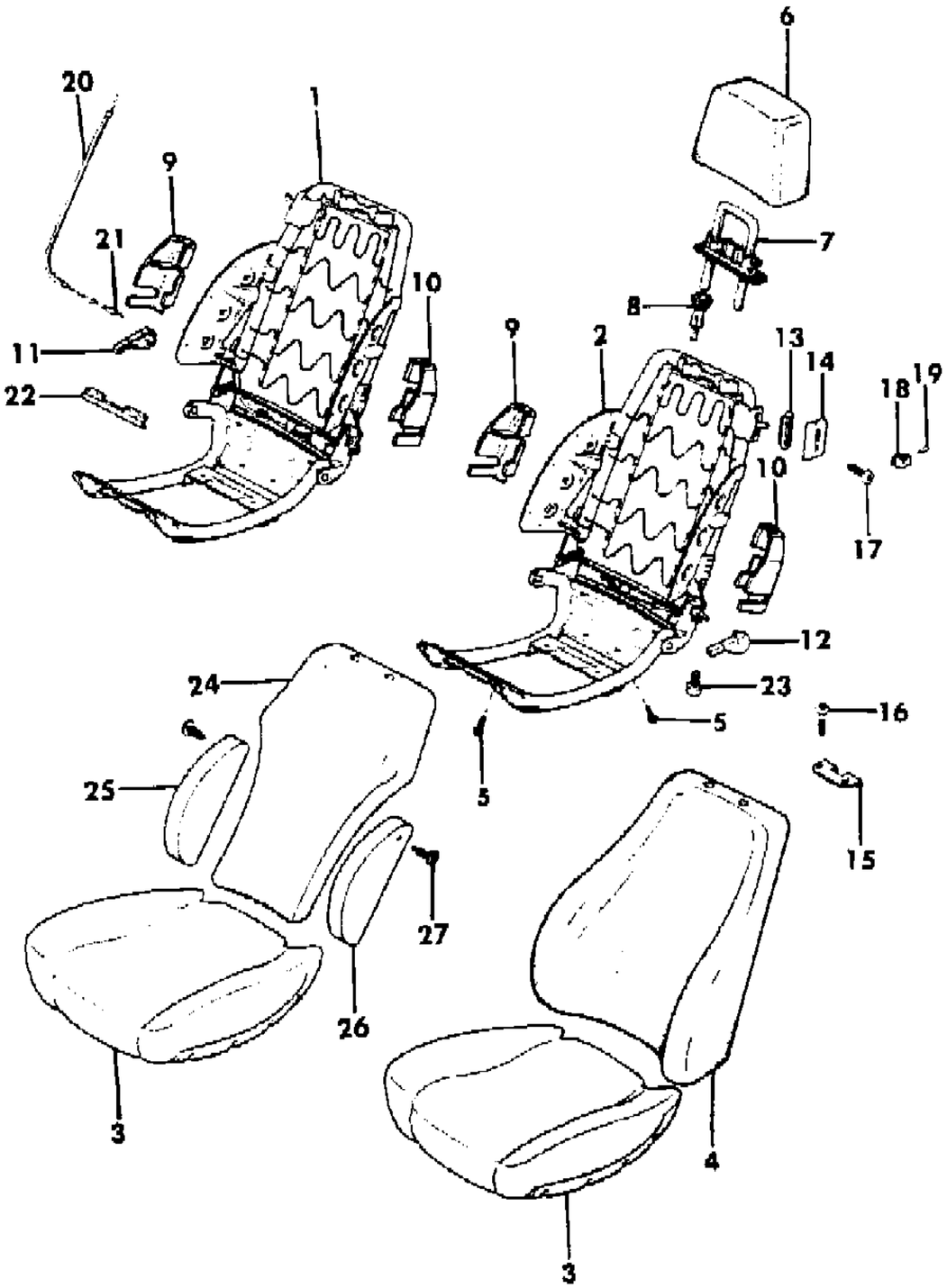

ITEM	PART NUMBER	QTY	BODY	MODEL	DESCRIPTION
19	J045 5735	2			PIN, Spring
20	3500 6068	2			CABLE, Seat Release
21	3500 6069	2			SPRING, Return
22	3500 6526	2			COVER, Latch
23	3500 3095	4			BUMPER, Stop
24	3500 5470	2			PAD, Back
25	3501 1228	2			PAD, Side Wing
26	3501 1229	2			PAD, Side Wing
27	3420 1314	4			SCREW

MODEL CODES
16=Cherokee 2 Dr.(1981-83)
17=Cherokee 2 Dr.(1981-83)
73=Cherokee 2WD-2 Dr.(1984-86)
74=Cherokee 2WD-4 Dr.(1984-86)
18=Cherokee 4 Dr.(1981-83)
77=Cherokee 4WD-2 Dr.(1984-86)
78=Cherokee 4WD-4 Dr.(1984-86)
85=CJ-5 (1981-83)
86=CJ-6(1981)
87=CJ-7(1981-86)
88=CJ-8, Scrambler(1981-86)
64=Comanche 2WD-6 Ft. Box(1986)
66=Comanche 2WD-7 Ft. Box(1986)
63=Comanche 4WD-6 Ft. Box(1986)
65=Comanche 4WD-7 Ft. Box(1986)
15=Grand Wagoneer 4 Dr.(1984-86)
25=J-10 Truck 7 Ft. Box(1981-84)
26=J10 Truck 8 Ft. Box(1981-86)
27=J-20 Truck 8 Ft. Box(1981-86)
15=Wagoneer 4 Dr.(1981-83)
75=Wagoneer 4WD-4 Dr.(1984-86)

BODY
CJ=CJ-5, CJ-6, CJ-7, CJ-8, Scrambler(1981-86)
MJ=Comanche Pickup(1986)

STYLES
SJ=Wagoneer(1981-83), Grand Wagoneer(1984-86), Cherokee(1981-83), J-10, J-20(1981-86)
XJ=Wagoneer(1984-86), Cherokee(1984-86)

AR = Use as Required - = Non Illustrated Part P.A.R. = Paint as Required

« RETURN TO GROUP INDEX

FRAME AND PAD 4 DOOR WITH BUCKET SEATS XJ CHEROKEE, XJ WAGONEER
Figure 47-2200

81J 047 2200

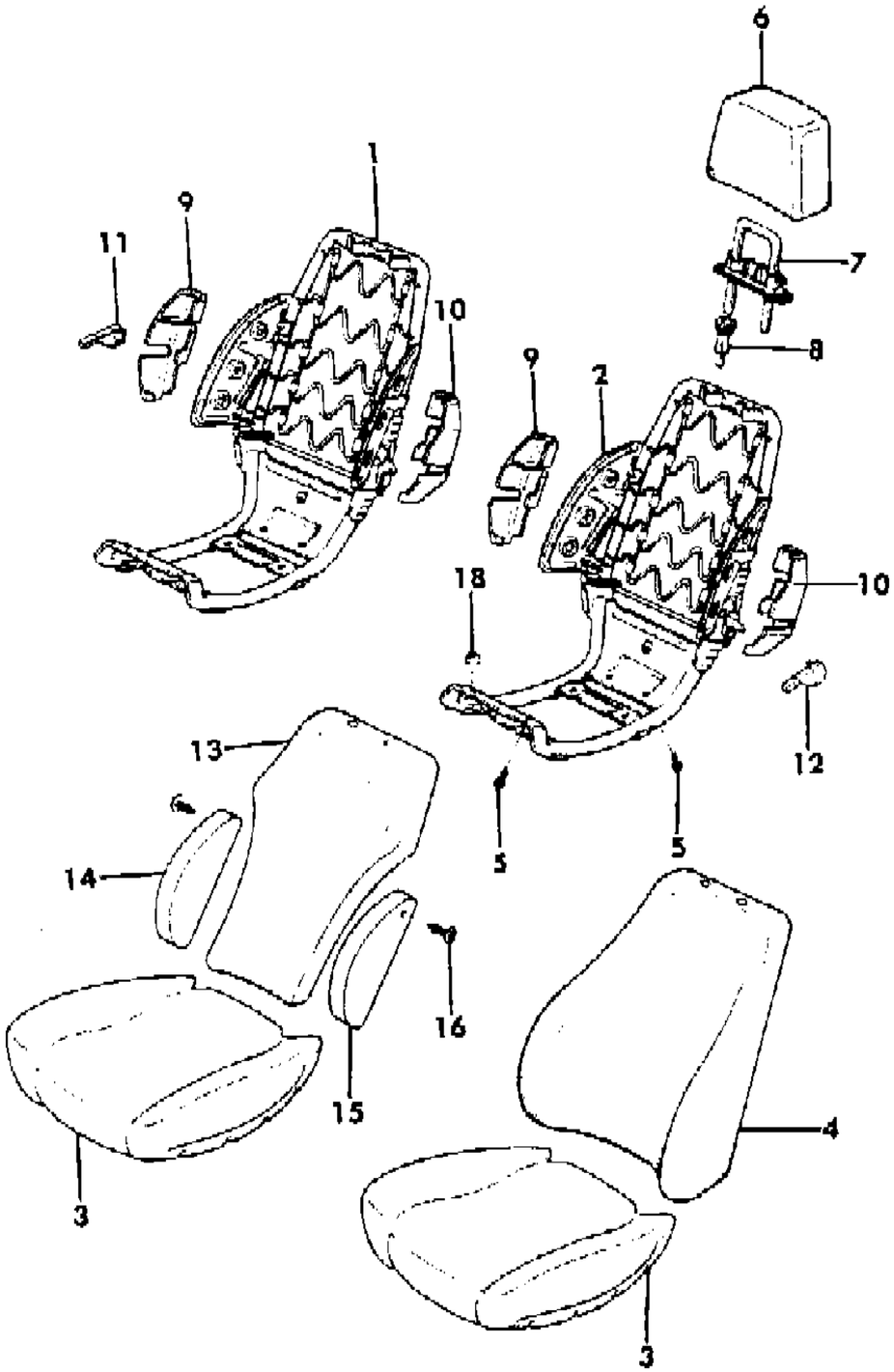

ITEM	PART NUMBER	QTY	BODY	MODEL	DESCRIPTION
1					FRAME, Seat
	3500 0747	1			w/Fixed Seat Back
					w/Reclining Seat Back
	3500 0748	1			1984-85
	3500 6980	1			1986
2					FRAME, Seat
	3500 0747	1			w/Fixed Seat Back
					w/Reclining Seat Back
	3500 0749	1			1984-85
	3500 6981	1			1986
3	3500 0762	2			PAD, Cushion
4	3500 2769	2			PAD, Back
5	1150 4735	8			BOLT
6	3500 1690	2			PAD, Headrest
7	3500 3669	2			POST, Headrest ***
8					CYLINDER, Headrest
	T064 6133	4			1984-85
	T134 9642	4			1986
9	3500 4710	2			COVER, Bracket
10	3500 4711	2			COVER, Bracket
11	3500 3686	1			HANDLE, Recliner
12	3500 2930	1			HANDLE, Recliner
13	3500 5470	2			PAD, Back
14	3501 1228	2			PAD, Side Wing
15	3501 1229	2			PAD, Side Wing
16	3420 1314	4			SCREW
18	1150 2729	4			NUT

MODEL CODES

16=Cherokee 2 Dr.(1981-83)	78=Cherokee 4WD-4 Dr.(1984-86)	64=Comanche 2WD-6 Ft. Box(1986)	25=J-10 Truck 7 Ft. Box(1981-84)
17=Cherokee 2 Dr.(1981-83)	85=CJ-5 (1981-83)	66=Comanche 2WD-7 Ft. Box(1986)	26=J10 Truck 8 Ft. Box(1981-86)
73=Cherokee 2WD-2 Dr.(1984-86)	86=CJ-6(1981)	63=Comanche 4WD-6 Ft. Box(1986)	27=J-20 Truck 8 Ft. Box(1981-86)
74=Cherokee 2WD-4 Dr.(1984-86)	87=CJ-7(1981-86)	65=Comanche 4WD-7 Ft. Box(1986)	15=Wagoneer 4 Dr.(1981-83)
18=Cherokee 4 Dr.(1981-83)	88=CJ-8, Scrambler(1981-86)	15=Grand Wagoneer 4 Dr.(1984-86)	75=Wagoneer 4WD-4 Dr.(1984-86)
77=Cherokee 4WD-2 Dr.(1984-86)			

BODY
CJ=CJ-5, CJ-6, CJ-7, CJ-8, Scrambler(1981-86)
MJ=Comanche Pickup(1986)

STYLES
SJ=Wagoneer(1981-83), Grand Wagoneer(1984-86), Cherokee(1981-83), J-10, J-20(1981-86)
XJ=Wagoneer(1984-86), Cherokee(1984-86)

AR = Use as Required - = Non Illustrated Part P.A.R. = Paint as Required

« RETURN TO GROUP INDEX

FRAME AND PAD WITH BENCH SEAT COMANCHE
Figure 47-2300

81J 047 2300

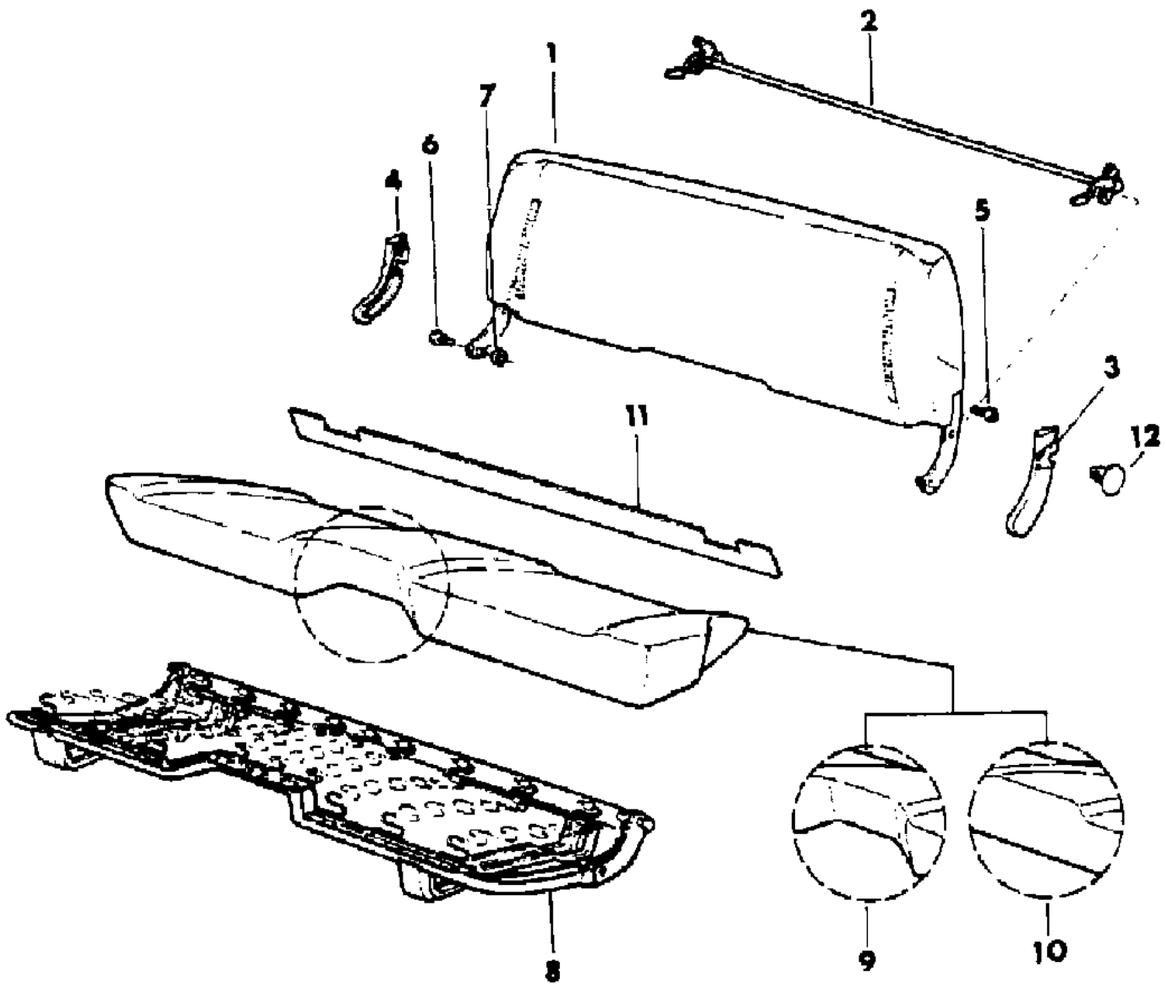

ITEM	PART NUMBER	QTY	BODY	MODEL	DESCRIPTION
1	5500 8836	1			FRAME, Seat Back, Including Pad
2	5500 8835	1			LATCH, Seat Back
3					COVER, Hinge
	5500 6471	1			Prime Paint, P.A.R.
4					COVER, Hinge
	5500 6470	1			Prime Paint, P.A.R.
5	3420 1596	4			BOLT
6	3420 2181	4			BOLT
7	J400 7070	2			WASHER
8	5500 4290	1			FRAME, Cushion
9	5500 4292	1			PAD, Cushion
10	5500 9710	1			PAD, Cushion
11	J374 1218	1			PROTECTOR, Cushion Edge
12	3420 1845	4			RIVET

MODEL CODES

16=Cherokee 2 Dr.(1981-83)
17=Cherokee 2 Dr.(1981-83)
73=Cherokee 2WD-2 Dr.(1984-86)
74=Cherokee 2WD-4 Dr.(1984-86)
18=Cherokee 4 Dr.(1981-83)
77=Cherokee 4WD-2 Dr.(1984-86)
78=Cherokee 4WD-4 Dr.(1984-86)
85=CJ-5 (1981-83)
86=CJ-6(1981)
87=CJ-7(1981-86)
88=CJ-8, Scrambler(1981-86)
64=Comanche 2WD-6 Ft. Box(1986)
66=Comanche 2WD-7 Ft. Box(1986)
63=Comanche 4WD-6 Ft. Box(1986)
65=Comanche 4WD-7 Ft. Box(1986)
15=Grand Wagoneer 4 Dr.(1984-86)
25=J-10 Truck 7 Ft. Box(1981-84)
26=J10 Truck 8 Ft. Box(1981-86)
27=J-20 Truck 8 Ft. Box(1981-86)
15=Wagoneer 4 Dr.(1981-83)
75=Wagoneer 4WD-4 Dr.(1984-86)

BODY
CJ=CJ-5, CJ-6, CJ-7, CJ-8, Scrambler(1981-86)
MJ=Comanche Pickup(1986)

STYLES
SJ=Wagoneer(1981-83), Grand Wagoneer(1984-86), Cherokee(1981-83), J-10, J-20(1981-86)
XJ=Wagoneer(1984-86), Cherokee(1984-86)

AR = Use as Required - = Non Illustrated Part P.A.R. = Paint as Required

« RETURN TO GROUP INDEX

FRAME AND PAD REAR SEAT BACK XJ CHEROKEE, XJ WAGONEER
Figure 47-2400

81J 047 2400

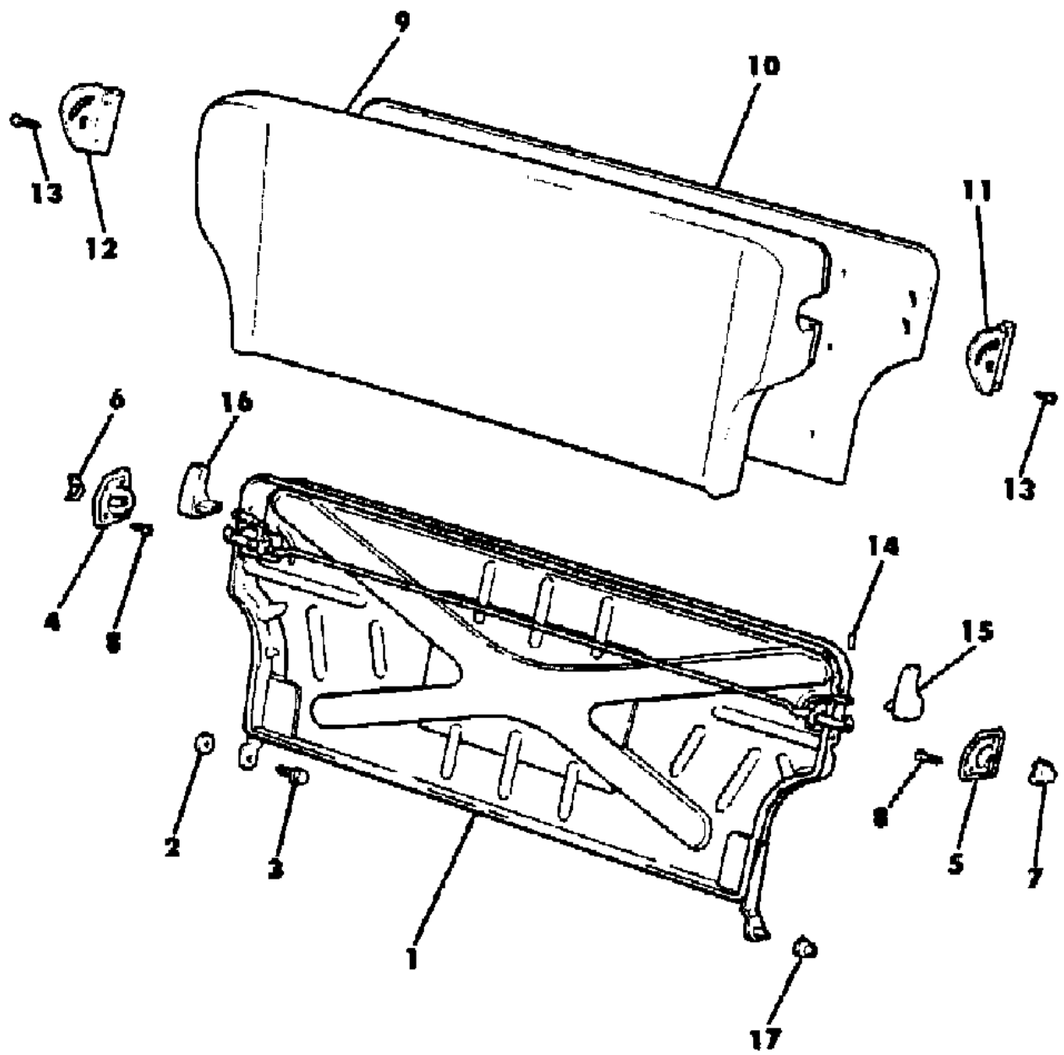

ITEM	PART NUMBER	QTY	BODY	MODEL	DESCRIPTION
1					PANEL, Back
	5500 0404	1			
	5501 7737	1			Economic Commission of Europe
2	5500 5617	AR			SPACER
3	3420 1537	1			SCREW
4	5500 0416	1			BRACKET
5	5500 0417	1			BRACKET
6	5500 1212	1			BUMPER
7	5500 1213	1			BUMPER
8					SCREW
	5150 1638	6			1984-85
	3420 2189	6			1986
9	5500 0405	1			PAD, Back
10	5500 3611	1			BOARD
11					BEZEL, Back Trim
	5500 2657	1			Almond, 1984-85
	5500 8803	1			Med. Blue, 1984-85
	5500 2655	1			Slate Blue, 1984-85
	5500 2659	1			Garnet, 1984-85
	5500 6137	1			Honey, 1984-85
	5500 2661	1			Nutmeg, 1984-85
	5500 6137	1			Prime, P.A.R., 1986
12					BEZEL, Back Trim
	5500 2656	1			Almond, 1984-85
	5500 8802	1			Med. Blue, 1984-85
	5500 2654	1			Slate Blue, 1984-85
	5500 2658	1			Garnet, 1984-85
	5500 6136	1			Honey, 1984-85
	5500 2660	1			Nutmeg, 1984-85
	5500 6136	1			Prime, P.A.R., 1986
13	3420 1314	4			SCREW
14	J045 5735	3			PIN, Spring
15	5500 5157	1			KNOB, Seat Latch P.A.R.
16	5500 5156	1			KNOB, Seat Latch P.A.R.
17	5500 1230	1			GROMMET

MODEL CODES
16=Cherokee 2 Dr.(1981-83)
17=Cherokee 2 Dr.(1981-83)
73=Cherokee 2WD-2 Dr.(1984-86)
74=Cherokee 2WD-4 Dr.(1984-86)
18=Cherokee 4 Dr.(1981-83)
77=Cherokee 4WD-2 Dr.(1984-86)
78=Cherokee 4WD-4 Dr.(1984-86)
85=CJ-5 (1981-83)
86=CJ-6(1981)
87=CJ-7(1981-86)
88=CJ-8, Scrambler(1981-86)
64=Comanche 2WD-6 Ft. Box(1986)
66=Comanche 2WD-7 Ft. Box(1986)
63=Comanche 4WD-6 Ft. Box(1986)
65=Comanche 4WD-7 Ft. Box(1986)
15=Grand Wagoneer 4 Dr.(1984-86)
25=J-10 Truck 7 Ft. Box(1981-84)
26=J10 Truck 8 Ft. Box(1981-86)
27=J-20 Truck 8 Ft. Box(1981-86)
15=Wagoneer 4 Dr.(1981-83)
75=Wagoneer 4WD-4 Dr.(1984-86)

BODY
CJ=CJ-5, CJ-6, CJ-7, CJ-8, Scrambler(1981-86)
MJ=Comanche Pickup(1986)

STYLES
SJ=Wagoneer(1981-83), Grand Wagoneer(1984-86), Cherokee(1981-83), J-10, J-20(1981-86)
XJ=Wagoneer(1984-86), Cherokee(1984-86)

AR = Use as Required - = Non Illustrated Part P.A.R. = Paint as Required

« RETURN TO GROUP INDEX

FRAME AND PAD REAR SEAT CUSHION XJ CHEROKEE, XJ WAGONEER
Figure 47-2500

81J 047 2500

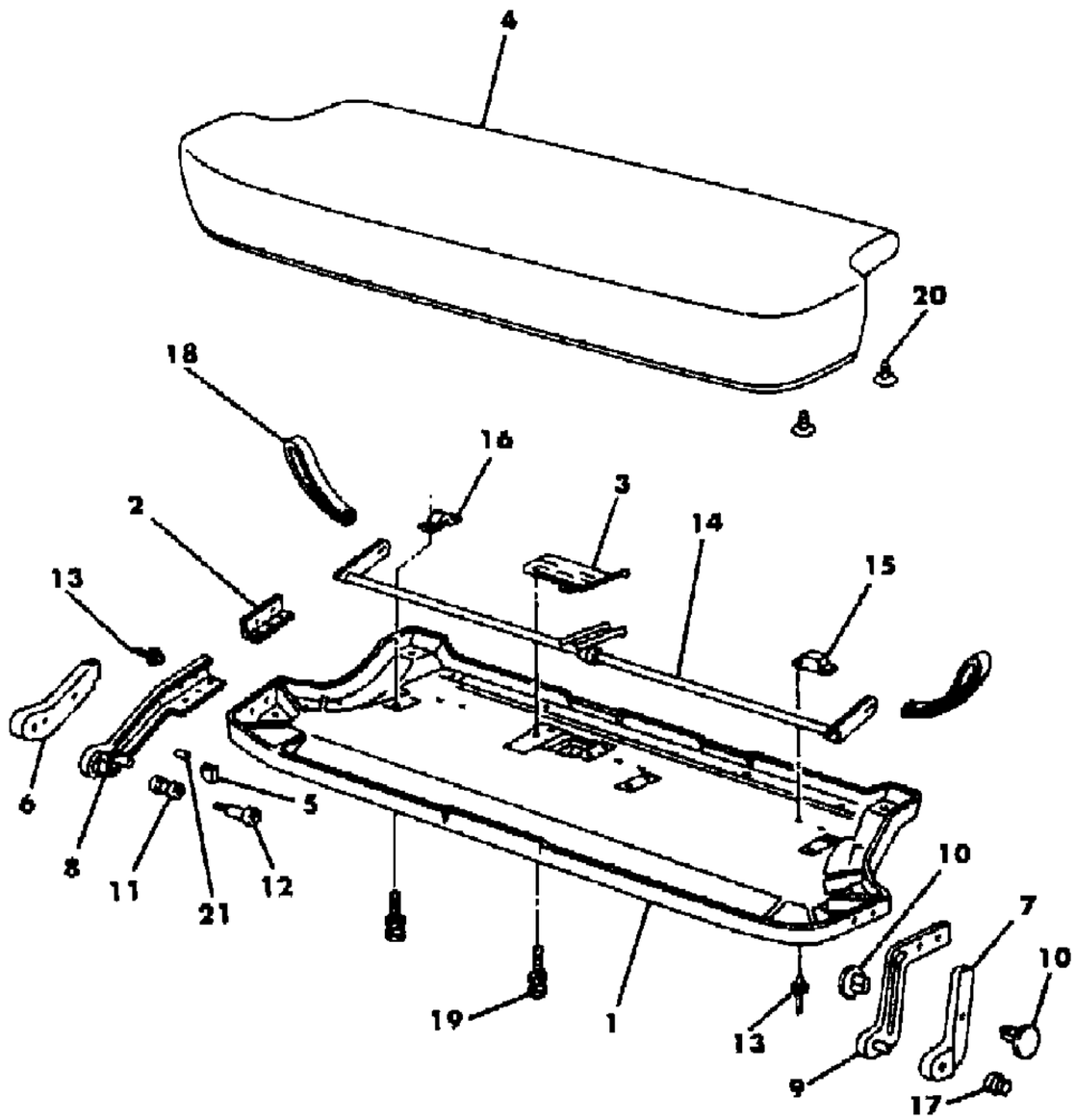

ITEM	PART NUMBER	QTY	BODY	MODEL	DESCRIPTION
1	5500 1214	1			PANEL, Cushion
2	5500 2833	1			REINFORCEMENT
3	5500 0426	1			LATCH
4	5500 4573	1			PAD
5	5500 2897	1			KNOB, P.A.R.
6					COVER, Hinge
	5500 2578	1			Almond, 1984-85
	5500 8810	1			Med. Blue, 1984-85
	5500 2576	1			Slate Blue, 1984-85
	5500 2580	1			Garnet, 1984-85
	5500 6140	1			Honey, 1984-85
	5500 2582	1			Nutmeg, 1984-85
	5500 6140	1			Prime, P.A.R., 1986
7					COVER, Hinge
	5500 2579	1			Almond, 1984-85
	5500 8811	1			Med. Blue, 1984-85
	5500 2577	1			Slate Blue, 1984-85
	5500 2581	1			Garnet, 1984-85
	5500 6141	1			Honey, 1984-85
	5500 2583	1			Nutmeg, 1984-85
	5500 6141	1			Prime, P.A.R., 1986
8	5500 1136	1			HINGE
9	5500 1137	1			HINGE
10	3420 1845	4			RIVET
11	5500 2437	1			BUSHING
12	3420 1530	1			BOLT
13	3420 1557	8			RIVET
14	5500 4302	1			LATCH
15	5500 4317	3			BRACKET
16	5500 4301	3			BRACKET
17	5500 1230	2			GROMMET
18					STRAP, Seat Latch
	5500 4799	2			Almond, 1984-85
	5500 8815	2			Black, 1986
	5500 8814	2			Med. Blue, 1984-85
	5500 4798	2			Slate Blue, 1984-85
	5501 2238	2			Cordovan, 1986
	5500 4800	2			Garnet, 1984-86
	5500 6107	2			Honey, 1984-85

MODEL CODES

16=Cherokee 2 Dr.(1981-83)
17=Cherokee 2 Dr.(1981-83)
73=Cherokee 2WD-2 Dr.(1984-86)
74=Cherokee 2WD-4 Dr.(1984-86)
18=Cherokee 4 Dr.(1981-83)
77=Cherokee 4WD-2 Dr.(1984-86)
78=Cherokee 4WD-4 Dr.(1984-86)
85=CJ-5 (1981-83)
86=CJ-6(1981)
87=CJ-7(1981-86)
88=CJ-8, Scrambler(1981-86)
64=Comanche 2WD-6 Ft. Box(1986)
66=Comanche 2WD-7 Ft. Box(1986)
63=Comanche 4WD-6 Ft. Box(1986)
65=Comanche 4WD-7 Ft. Box(1986)
15=Grand Wagoneer 4 Dr.(1984-86)
25=J-10 Truck 7 Ft. Box(1981-84)
26=J10 Truck 8 Ft. Box(1981-86)
27=J-20 Truck 8 Ft. Box(1981-86)
15=Wagoneer 4 Dr.(1981-83)
75=Wagoneer 4WD-4 Dr.(1984-86)

BODY
CJ=CJ-5, CJ-6, CJ-7, CJ-8, Scrambler(1981-86)
MJ=Comanche Pickup(1986)

STYLES
SJ=Wagoneer(1981-83), Grand Wagoneer(1984-86), Cherokee(1981-83), J-10, J-20(1981-86)
XJ=Wagoneer(1984-86), Cherokee(1984-86)

AR = Use as Required - = Non Illustrated Part P.A.R. = Paint as Required

FRAME AND PAD REAR SEAT CUSHION XJ CHEROKEE, XJ WAGONEER
Figure 47-2500

81J 047 2500

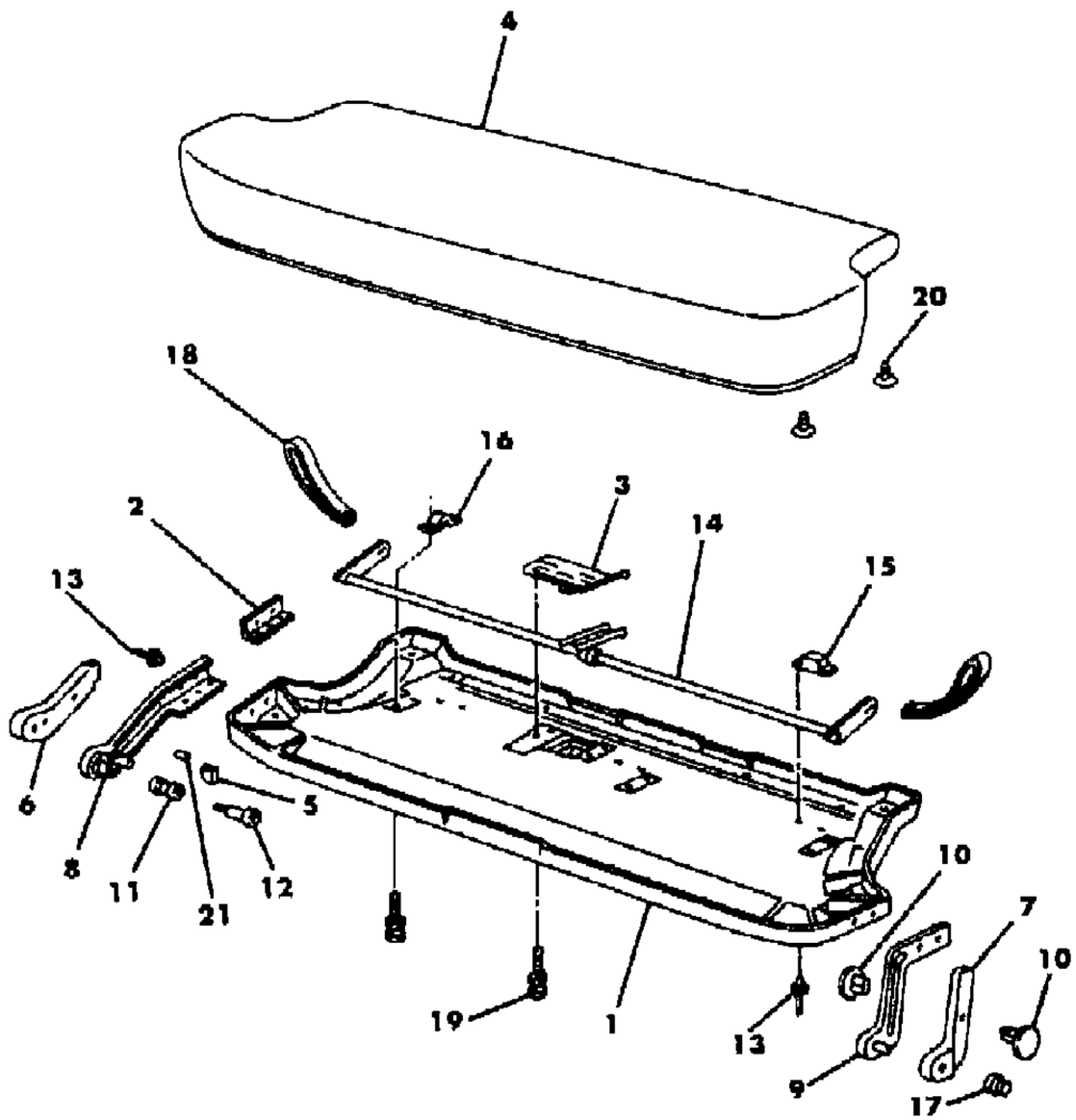

ITEM	PART NUMBER	QTY	BODY	MODEL	DESCRIPTION
	5500 4801	2			Nutmeg, 1984-85
	5501 2240	2			Tan, 1984-85
19	3420 2073	16			RIVET
20					FASTENER
	J400 7103	6			Almond, 1984-85
	J400 7359	6			Med. Blue, 1984-85
	J400 6969	6			Slate Blue, 1984-85
	J400 7104	6			Garnet, 1984-85
	J400 7187	6			Honey, 1984-85
	J400 6967	6			Nutmeg, 1984-85
	J400 7187	6			Prime, P.A.R., 1986
21	J045 5735	3			PIN, Spring

MODEL CODES

16=Cherokee 2 Dr.(1981-83)
17=Cherokee 2 Dr.(1981-83)
73=Cherokee 2WD-2 Dr.(1984-86)
74=Cherokee 2WD-4 Dr.(1984-86)
18=Cherokee 4 Dr.(1981-83)
77=Cherokee 4WD-2 Dr.(1984-86)
78=Cherokee 4WD-4 Dr.(1984-86)
85=CJ-5 (1981-83)
86=CJ-6(1981)
87=CJ-7(1981-86)
88=CJ-8, Scrambler(1981-86)
64=Comanche 2WD-6 Ft. Box(1986)
66=Comanche 2WD-7 Ft. Box(1986)
63=Comanche 4WD-6 Ft. Box(1986)
65=Comanche 4WD-7 Ft. Box(1986)
15=Grand Wagoneer 4 Dr.(1984-86)
25=J-10 Truck 7 Ft. Box(1981-84)
26=J10 Truck 8 Ft. Box(1981-86)
27=J-20 Truck 8 Ft. Box(1981-86)
15=Wagoneer 4 Dr.(1981-83)
75=Wagoneer 4WD-4 Dr.(1984-86)

BODY
CJ=CJ-5, CJ-6, CJ-7, CJ-8, Scrambler(1981-86)
MJ=Comanche Pickup(1986)

STYLES
SJ=Wagoneer(1981-83), Grand Wagoneer(1984-86), Cherokee(1981-83), J-10, J-20(1981-86)
XJ=Wagoneer(1984-86), Cherokee(1984-86)

AR = Use as Required - = Non Illustrated Part P.A.R. = Paint as Required

« RETURN TO GROUP INDEX

COVERS, FRONT SEAT 2 DOOR, 1984-85 XJ CHEROKEE
Figure 47-2600

81J 047 2600

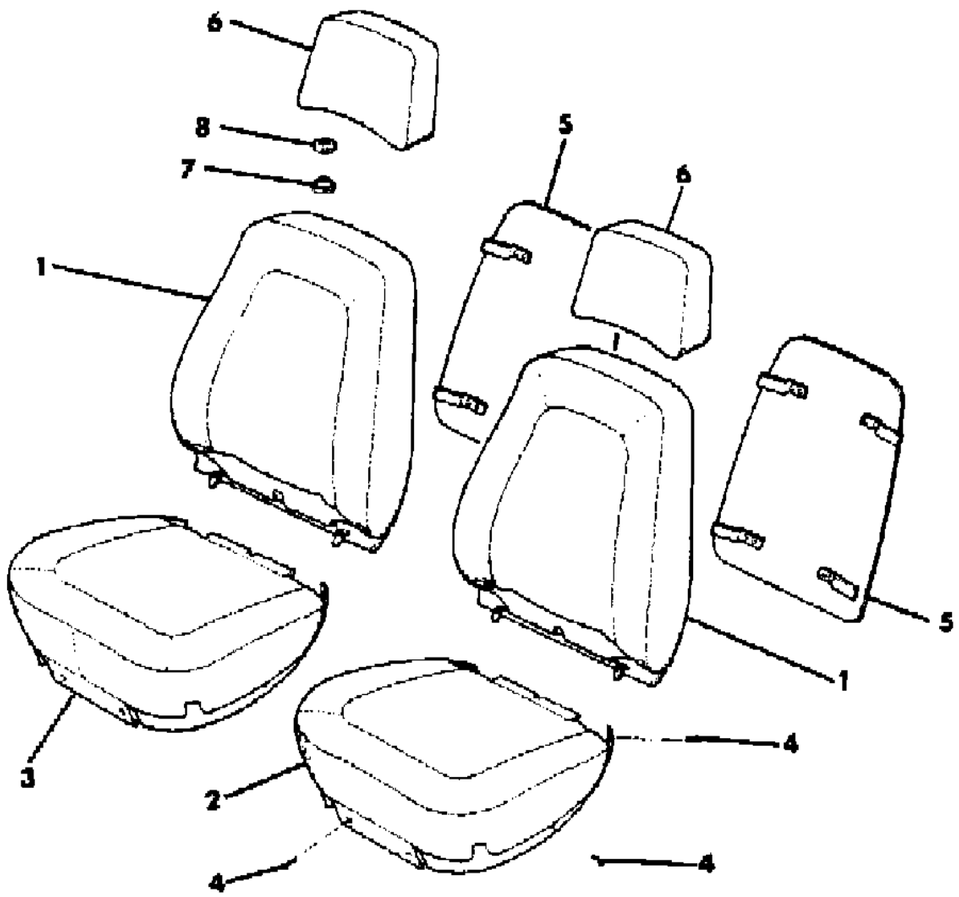

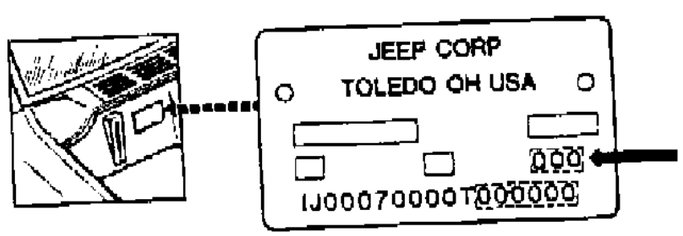

ITEM	PART NUMBER	QTY	BODY	MODEL	DESCRIPTION
1					COVER, Back
					Trim Code:
	5500 3950	2			3PX
	5500 9824	1			3QE, Rt.
	5500 9825	1			3QE, Lt.
	5500 3974	2			3QU
	5500 8982	2			3QUP
	5500 3958	2			3QV
	5500 8966	2			3QVP
	5500 3982	2			4QU
	5500 3966	2			4QV
	5500 3990	1			4QW, Rt.
	5500 3991	1			4QW, Lt.
	5500 3986	2			5QU
	5500 3970	2			5QV
	5500 3954	2			6PX
	5500 3978	2			6QU
	5500 3962	2			6QV
	5500 6926	2			9QU
	5500 6910	2			9QV
	5500 3994	1			9QW, Rt.
	5500 3995	1			9QW, Lt.
2					COVER, Cushion
					Trim Code:
	5500 3903	1			3PX
	5500 9823	1			3QE
	5500 3927	1			3QU
	5500 7857	1			3QUP
	5500 3911	1			3QV
	5500 7865	1			3QVP
	5500 3935	1			4QU
	5500 3919	1			4QV
	5500 3943	1			4QW
	5500 3939	1			5QU
	5500 3923	1			5QV
	5500 3907	1			6PX
	5500 3931	1			6QU
	5500 3915	1			6QV
	5500 6883	1			9QU

MODEL CODES
16=Cherokee 2 Dr.(1981-83)
17=Cherokee 2 Dr.(1981-83)
73=Cherokee 2WD-2 Dr.(1984-86)
74=Cherokee 2WD-4 Dr.(1984-86)
18=Cherokee 4 Dr.(1981-83)
77=Cherokee 4WD-2 Dr.(1984-86)
78=Cherokee 4WD-4 Dr.(1984-86)
85=CJ-5 (1981-83)
86=CJ-6(1981)
87=CJ-7(1981-86)
88=CJ-8, Scrambler(1981-86)
64=Comanche 2WD-6 Ft. Box(1986)
66=Comanche 2WD-7 Ft. Box(1986)
63=Comanche 4WD-6 Ft. Box(1986)
65=Comanche 4WD-7 Ft. Box(1986)
15=Grand Wagoneer 4 Dr.(1984-86)
25=J-10 Truck 7 Ft. Box(1981-84)
26=J10 Truck 8 Ft. Box(1981-86)
27=J-20 Truck 8 Ft. Box(1981-86)
15=Wagoneer 4 Dr.(1981-83)
75=Wagoneer 4WD-4 Dr.(1984-86)

BODY
CJ=CJ-5, CJ-6, CJ-7, CJ-8, Scrambler(1981-86)
MJ=Comanche Pickup(1986)

STYLES
SJ=Wagoneer(1981-83), Grand Wagoneer(1984-86), Cherokee(1981-83), J-10, J-20(1981-86)
XJ=Wagoneer(1984-86), Cherokee(1984-86)

AR = Use as Required - = Non Illustrated Part P.A.R. = Paint as Required

COVERS, FRONT SEAT 2 DOOR, 1984-85 XJ CHEROKEE
Figure 47-2600

81J 047 2600

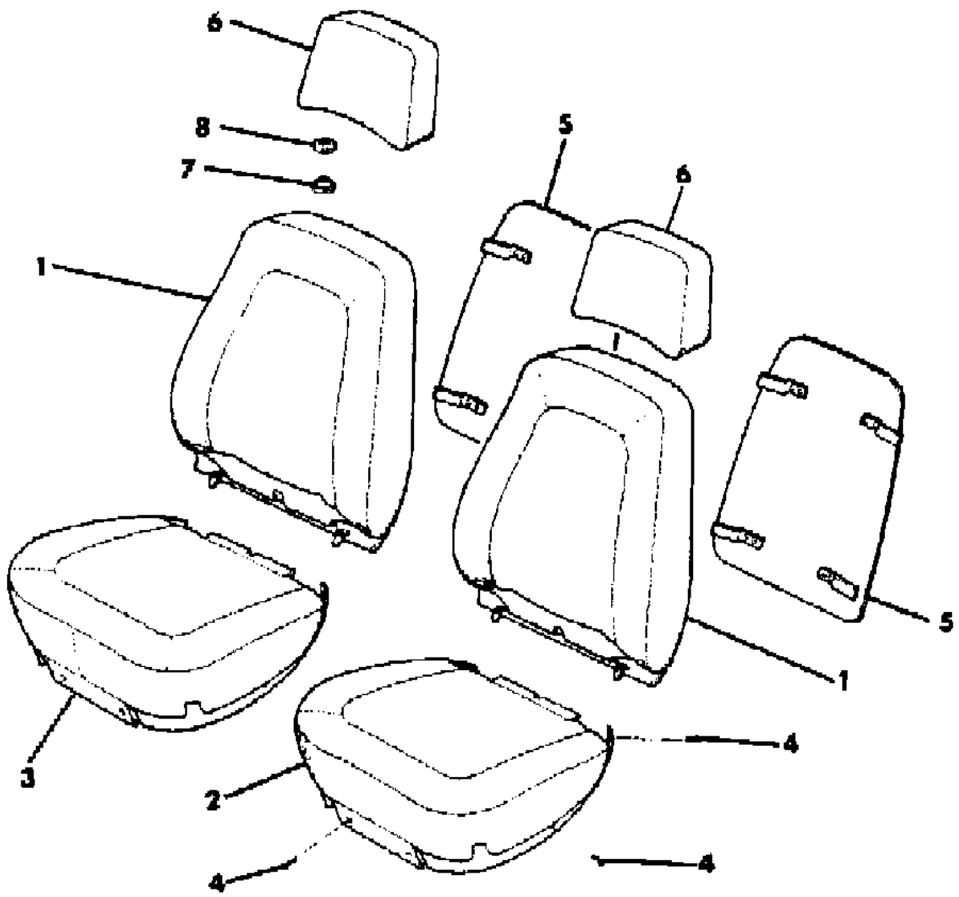

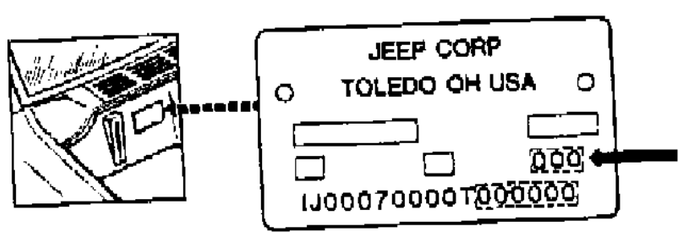

ITEM	PART NUMBER	QTY	BODY	MODEL	DESCRIPTION
	5500 6879	1			9QV
	5500 3947	1			9QW
3					COVER, Cushion
					Trim Code:
	5500 3902	1			3PX
	5500 9822	1			3QE
	5500 3926	1			3QU
	5500 7856	1			3QUP
	5500 3910	1			3QV
	5500 7864	1			3QVP
	5500 3934	1			4QU
	5500 3918	1			4QV
	5500 3942	1			4QW
	5500 3938	1			5QU
	5500 3922	1			5QV
	5500 3906	1			6PX
	5500 3930	1			6QU
	5500 3914	1			6QV
	5500 6882	1			9QU
	5500 6878	1			9QV
	5500 3946	1			9QW
4	3420 1314	12			SCREW
5					PANEL, Seat Back
					w/Carpet:
	5500 4578	2			Almond
	5500 8375	2			Med. Blue
	5500 4577	2			Slate Blue
					w/Vinyl:
	5500 4576	2			Almond
	5500 4575	2			Slate Blue
					w/o Laredo Pkg.
	5500 4579	2			Garnet
	5500 6120	2			Honey
					w/Laredo Pkg.
	5500 4581	2			Garnet
	5500 6121	2			Honey
	5500 4580	2			Nutmeg
6					COVER, Headrest
	3500 1287	2			Almond

MODEL CODES

16=Cherokee 2 Dr.(1981-83)	78=Cherokee 4WD-4 Dr.(1984-86)	64=Comanche 2WD-6 Ft. Box(1986)	25=J-10 Truck 7 Ft. Box(1981-84)
17=Cherokee 2 Dr.(1981-83)	85=CJ-5 (1981-83)	66=Comanche 2WD-7 Ft. Box(1986)	26=J10 Truck 8 Ft. Box(1981-86)
73=Cherokee 2WD-2 Dr.(1984-86)	86=CJ-6(1981)	63=Comanche 4WD-6 Ft. Box(1986)	27=J-20 Truck 8 Ft. Box(1981-86)
74=Cherokee 2WD-4 Dr.(1984-86)	87=CJ-7(1981-86)	65=Comanche 4WD-7 Ft. Box(1986)	15=Wagoneer 4 Dr.(1981-83)
18=Cherokee 4 Dr.(1981-83)	88=CJ-8, Scrambler(1981-86)	15=Grand Wagoneer 4 Dr.(1984-86)	75=Wagoneer 4WD-4 Dr.(1984-86)
77=Cherokee 4WD-2 Dr.(1984-86)			

BODY
CJ=CJ-5, CJ-6, CJ-7, CJ-8, Scrambler(1981-86)
MJ=Comanche Pickup(1986)

STYLES
SJ=Wagoneer(1981-83), Grand Wagoneer(1984-86), Cherokee(1981-83), J-10, J-20(1981-86)
XJ=Wagoneer(1984-86), Cherokee(1984-86)

AR = Use as Required - = Non Illustrated Part P.A.R. = Paint as Required

COVERS, FRONT SEAT 2 DOOR, 1984-85 XJ CHEROKEE
Figure 47-2600

81J 047 2600

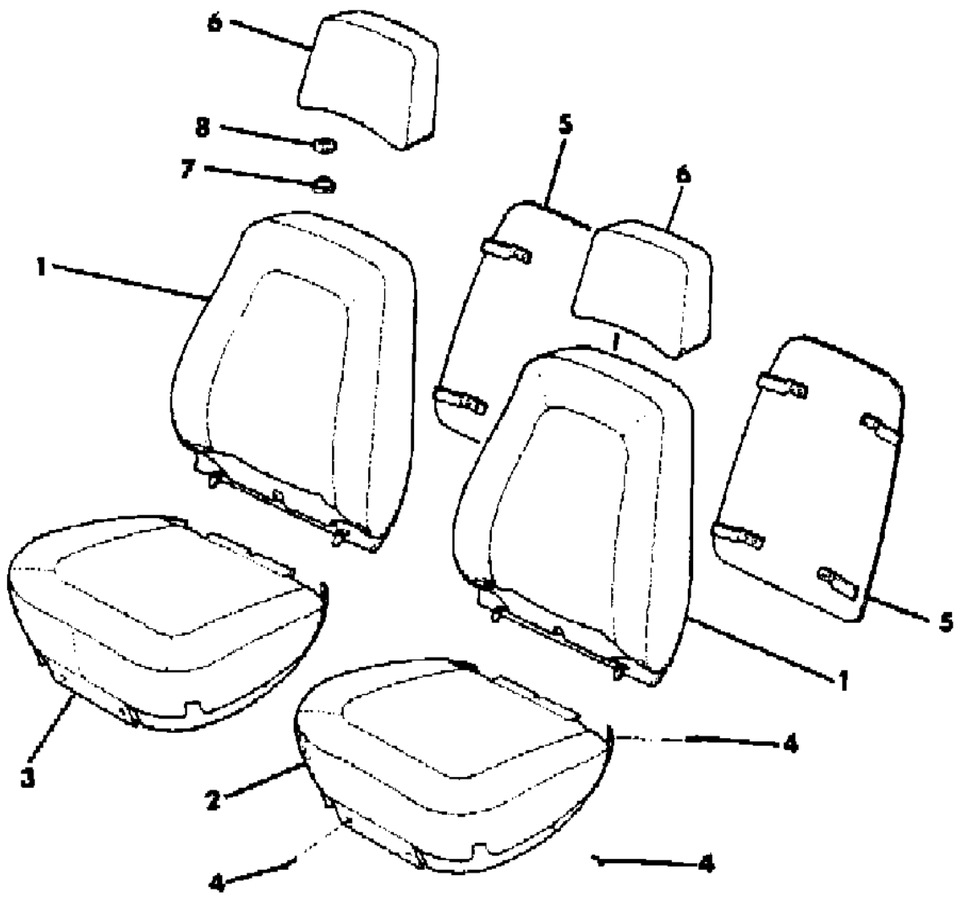

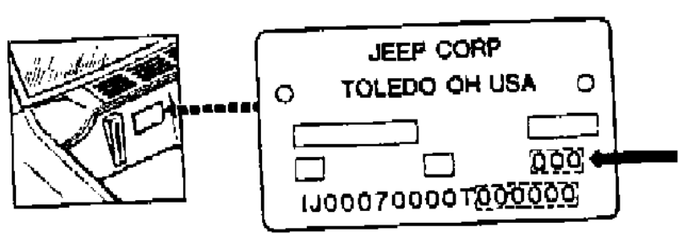

ITEM	PART NUMBER	QTY	BODY	MODEL	DESCRIPTION
	3500 7250	2			Med. Blue
	5500 6950	2			Slate Blue
	3500 1288	2			Garnet
	3500 6106	2			Honey
	3500 1289	2			Nutmeg
7					EYELET, Lower ***
	3500 3381	4			Almond
	3500 8661	4			Slate Blue
	3500 3382	4			Garnet
	3500 3383	4			Nutmeg
8					EYELET, Upper ***
	3500 3122	4			Almond
	3500 8660	4			Slate Blue
	3500 3123	4			Garnet
	3500 3124	4			Nutmeg

MODEL CODES
16=Cherokee 2 Dr.(1981-83)
17=Cherokee 2 Dr.(1981-83)
73=Cherokee 2WD-2 Dr.(1984-86)
74=Cherokee 2WD-4 Dr.(1984-86)
18=Cherokee 4 Dr.(1981-83)
77=Cherokee 4WD-2 Dr.(1984-86)
78=Cherokee 4WD-4 Dr.(1984-86)
85=CJ-5 (1981-83)
86=CJ-6(1981)
87=CJ-7(1981-86)
88=CJ-8, Scrambler(1981-86)
64=Comanche 2WD-6 Ft. Box(1986)
66=Comanche 2WD-7 Ft. Box(1986)
63=Comanche 4WD-6 Ft. Box(1986)
65=Comanche 4WD-7 Ft. Box(1986)
15=Grand Wagoneer 4 Dr.(1984-86)
25=J-10 Truck 7 Ft. Box(1981-84)
26=J10 Truck 8 Ft. Box(1981-86)
27=J-20 Truck 8 Ft. Box(1981-86)
15=Wagoneer 4 Dr.(1981-83)
75=Wagoneer 4WD-4 Dr.(1984-86)

BODY
CJ=CJ-5, CJ-6, CJ-7, CJ-8, Scrambler(1981-86)
MJ=Comanche Pickup(1986)

STYLES
SJ=Wagoneer(1981-83), Grand Wagoneer(1984-86), Cherokee(1981-83), J-10, J-20(1981-86)
XJ=Wagoneer(1984-86), Cherokee(1984-86)

AR = Use as Required - = Non Illustrated Part P.A.R. = Paint as Required

« RETURN TO GROUP INDEX

COVERS, SEAT 2 DOOR, CLOTH 1986 XJ CHEROKEE
Figure 47-2700

81J 047 2700

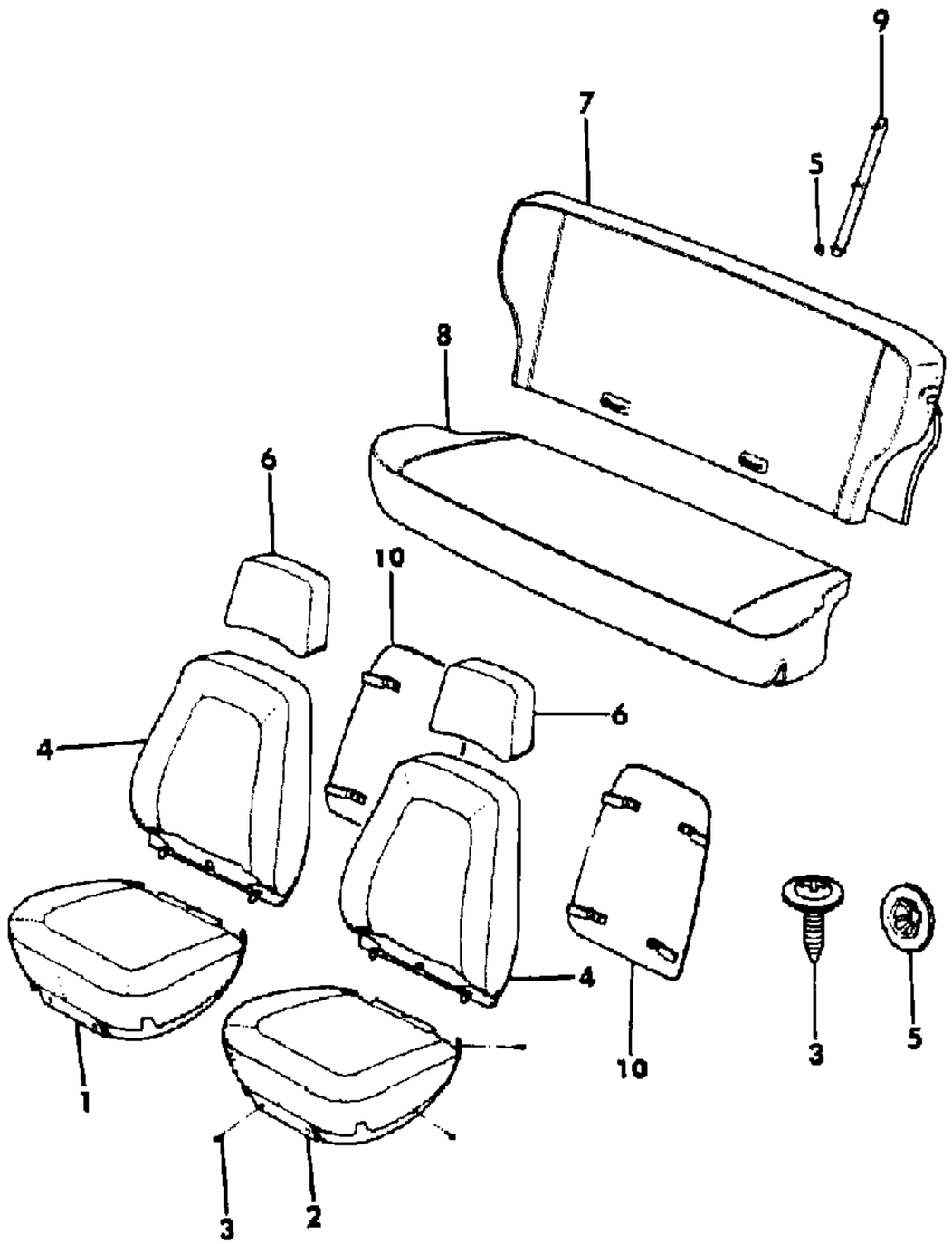

ITEM	PART NUMBER	QTY	BODY	MODEL	DESCRIPTION
1					COVER, Cushion
					Highland Check Cloth
	5500 3942	1			Garnet, 4QW
	5500 3946	1			Honey, 9QW
					Hunter Plaid Cloth
	5501 2162	1			Tan, 6QW
					Mesa Cloth
	5500 7854	1			Black, 1QU
	5500 7856	1			Med. Blue, 3QU
	5500 7858	1			Garnet, 4QU
	5500 7860	1			Honey, 9QU
	5501 2154	1			Tan, 6QU
2					COVER, Cushion
					Highland Check Cloth
	5500 3943	1			Garnet, 4QW
	5500 3947	1			Honey, 9QW
					Hunter Plaid Cloth
	5501 2163	1			Tan, 6QW
					Mesa Cloth
	5500 7855	1			Black, 1QU
	5500 7857	1			Med. Blue, 3QU
	5500 7859	1			Garnet, 4QU
	5500 7861	1			Honey, 9QU
	5501 2155	1			Tan, 6QU
3	3420 1314	12			SCREW
4					Cover, Back ***
					Highland Check Cloth
	5500 3990-1	1			Garnet, 4QW
	5500 3994-5	1			Honey, 4QW
					Hunter Plaid Cloth
	5501 2190-1	1			Tan, 6QW
					Mesa Cloth
	5500 8988	2			Black, 1QU
	5500 8982	2			Med. Blue, 3QU
	5500 8992	2			Garnet, 4QU
	5500 8996	2			Honey, 9QU
	5501 2182	2			Tan, 6QU
5	3420 2014	12			NUT, Push
6					COVER, Headrest

MODEL CODES
16=Cherokee 2 Dr.(1981-83)
17=Cherokee 2 Dr.(1981-83)
73=Cherokee 2WD-2 Dr.(1984-86)
74=Cherokee 2WD-4 Dr.(1984-86)
18=Cherokee 4 Dr.(1981-83)
77=Cherokee 4WD-2 Dr.(1984-86)
78=Cherokee 4WD-4 Dr.(1984-86)
85=CJ-5 (1981-83)
86=CJ-6(1981)
87=CJ-7(1981-86)
88=CJ-8, Scrambler(1981-86)
64=Comanche 2WD-6 Ft. Box(1986)
66=Comanche 2WD-7 Ft. Box(1986)
63=Comanche 4WD-6 Ft. Box(1986)
65=Comanche 4WD-7 Ft. Box(1986)
15=Grand Wagoneer 4 Dr.(1984-86)
25=J-10 Truck 7 Ft. Box(1981-84)
26=J10 Truck 8 Ft. Box(1981-86)
27=J-20 Truck 8 Ft. Box(1981-86)
15=Wagoneer 4 Dr.(1981-83)
75=Wagoneer 4WD-4 Dr.(1984-86)

BODY
CJ=CJ-5, CJ-6, CJ-7, CJ-8, Scrambler(1981-86)
MJ=Comanche Pickup(1986)

STYLES
SJ=Wagoneer(1981-83), Grand Wagoneer(1984-86), Cherokee(1981-83), J-10, J-20(1981-86)
XJ=Wagoneer(1984-86), Cherokee(1984-86)

AR = Use as Required - = Non Illustrated Part P.A.R. = Paint as Required

« RETURN TO GROUP INDEX »

COVERS, SEAT 2 DOOR, CLOTH 1986 XJ CHEROKEE
Figure 47-2700

81J 047 2700

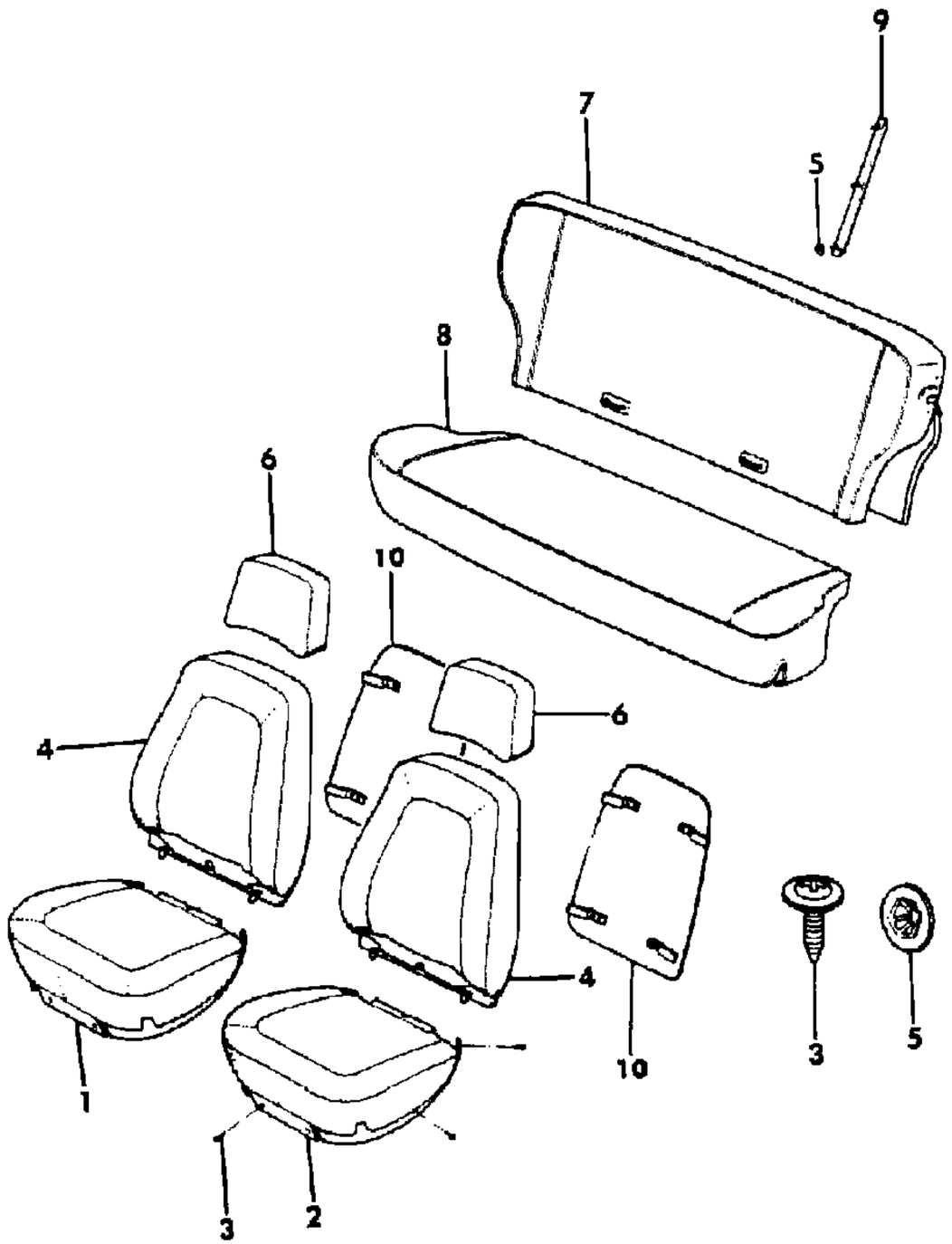

ITEM	PART NUMBER	QTY	BODY	MODEL	DESCRIPTION
	5500 9103	2			Black
	3500 7250	2			Med. Blue
	3500 1288	2			Garnet
	3500 6106	2			Honey
	3501 3109	2			Tan
7					COVER, Back
					Highland Check Cloth
	5500 7410	1			Garnet, 4QW
	5500 4021	1			Honey, 9QW
					Hunter Plaid
	5501 2268	1			Tan, 6QW
					Mesa Cloth
	5500 9033	1			Black, 1QU
	5500 9032	1			Med. Blue, 3QU
	5500 9034	1			Garnet, 4QU
	5500 9035	1			Honey, 9QU
	5501 2264	1			Tan, 6QU
8					COVER, Cushion
					Highland Check Cloth
	5500 4008	1			Garnet, 4QW
	5500 4009	1			Honey, 9QW
					Hunter Plaid Cloth
	5501 2254	1			Tan, 6QW
					Mesa Cloth
	5500 9023	1			Black, 1QU
	5500 9022	1			Med. Blue, 3QU
	5500 9024	1			Garnet, 4QU
	5500 9025	1			Honey, 9QU
	5501 2250	1			Tan, 6QU
9	5500 1076	6			STRIP, Skid ***
10					PANEL, Kick
					Highland Check Cloth
	5500 8372	2			Garnet, 4QW
	5500 8373	2			Honey, 9QW
					Hunter Plaid
	5501 2074	2			Tan, 6QW
					Mesa Cloth
	5500 8770	2			Black, 1QU
	5500 8375	2			Med. Blue, 3QU

MODEL CODES
16=Cherokee 2 Dr.(1981-83)
17=Cherokee 2 Dr.(1981-83)
73=Cherokee 2WD-2 Dr.(1984-86)
74=Cherokee 2WD-4 Dr.(1984-86)
18=Cherokee 4 Dr.(1981-83)
77=Cherokee 4WD-2 Dr.(1984-86)
78=Cherokee 4WD-4 Dr.(1984-86)
85=CJ-5 (1981-83)
86=CJ-6(1981)
87=CJ-7(1981-86)
88=CJ-8, Scrambler(1981-86)
64=Comanche 2WD-6 Ft. Box(1986)
66=Comanche 2WD-7 Ft. Box(1986)
63=Comanche 4WD-6 Ft. Box(1986)
65=Comanche 4WD-7 Ft. Box(1986)
15=Grand Wagoneer 4 Dr.(1984-86)
25=J-10 Truck 7 Ft. Box(1981-84)
26=J10 Truck 8 Ft. Box(1981-86)
27=J-20 Truck 8 Ft. Box(1981-86)
15=Wagoneer 4 Dr.(1981-83)
75=Wagoneer 4WD-4 Dr.(1984-86)

BODY
CJ=CJ-5, CJ-6, CJ-7, CJ-8, Scrambler(1981-86)
MJ=Comanche Pickup(1986)

STYLES
SJ=Wagoneer(1981-83), Grand Wagoneer(1984-86), Cherokee(1981-83), J-10, J-20(1981-86)
XJ=Wagoneer(1984-86), Cherokee(1984-86)

AR = Use as Required - = Non Illustrated Part P.A.R. = Paint as Required

COVERS, SEAT 2 DOOR, CLOTH 1986 XJ CHEROKEE
Figure 47-2700

81J 047 2700

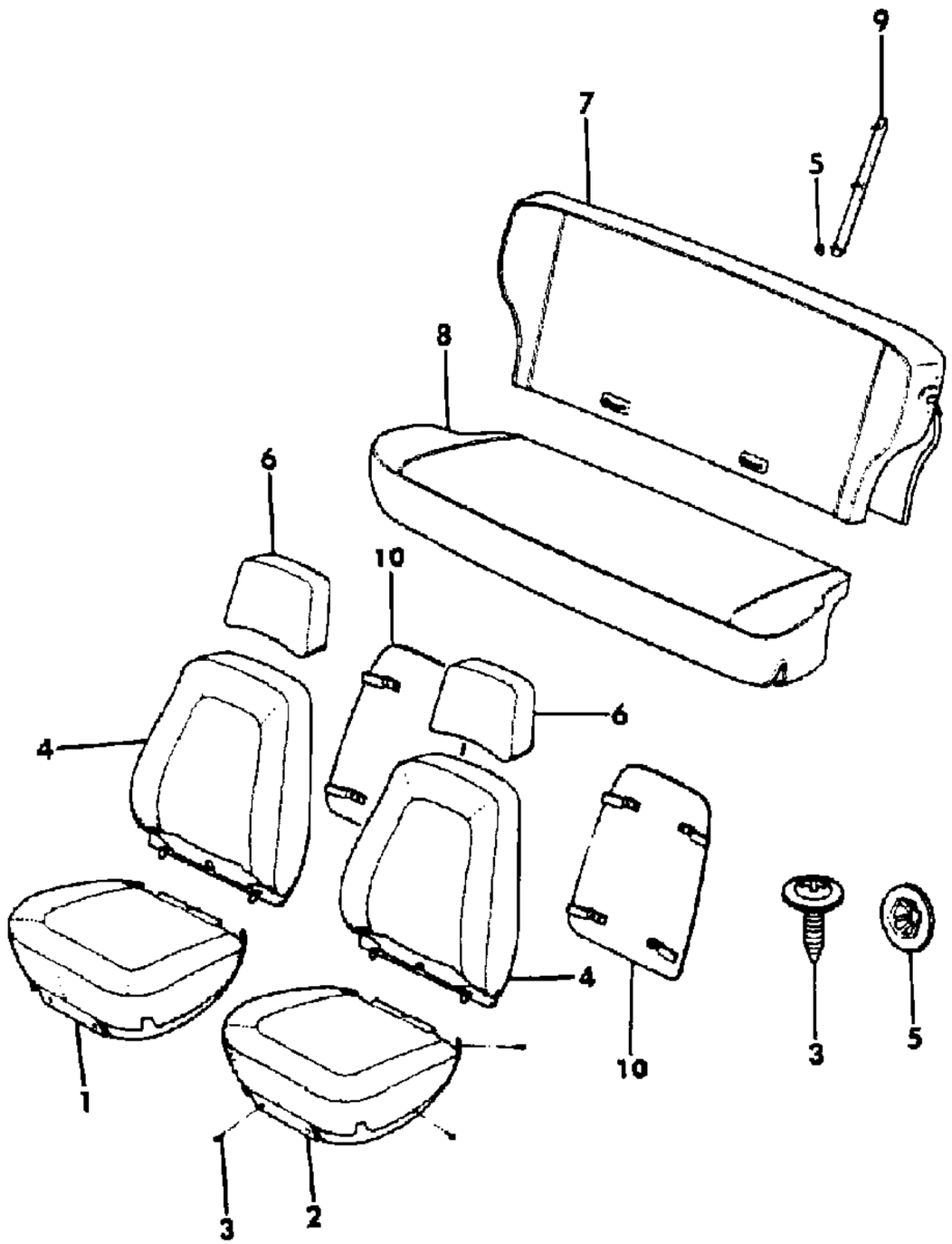

ITEM	PART NUMBER	QTY	BODY	MODEL	DESCRIPTION
	5500 8370	2			Garnet, 4QU
	5500 7371	2			Honey, 9QU
	5500 7065	2			Tan, 6QU

MODEL CODES

16=Cherokee 2 Dr.(1981-83)	78=Cherokee 4WD-4 Dr.(1984-86)	64=Comanche 2WD-6 Ft. Box(1986)	25=J-10 Truck 7 Ft. Box(1981-84)
17=Cherokee 2 Dr.(1981-83)	85=CJ-5 (1981-83)	66=Comanche 2WD-7 Ft. Box(1986)	26=J10 Truck 8 Ft. Box(1981-86)
73=Cherokee 2WD-2 Dr.(1984-86)	86=CJ-6(1981)	63=Comanche 4WD-6 Ft. Box(1986)	27=J-20 Truck 8 Ft. Box(1981-86)
74=Cherokee 2WD-4 Dr.(1984-86)	87=CJ-7(1981-86)	65=Comanche 4WD-7 Ft. Box(1986)	15=Wagoneer 4 Dr.(1981-83)
18=Cherokee 4 Dr.(1981-83)	88=CJ-8, Scrambler(1981-86)	15=Grand Wagoneer 4 Dr.(1984-86)	75=Wagoneer 4WD-4 Dr.(1984-86)
77=Cherokee 4WD-2 Dr.(1984-86)			

BODY
CJ=CJ-5, CJ-6, CJ-7, CJ-8, Scrambler(1981-86)
MJ=Comanche Pickup(1986)

STYLES
SJ=Wagoneer(1981-83), Grand Wagoneer(1984-86), Cherokee(1981-83), J-10, J-20(1981-86)
XJ=Wagoneer(1984-86), Cherokee(1984-86)

AR = Use as Required - = Non Illustrated Part P.A.R. = Paint as Required

« RETURN TO GROUP INDEX

COVERS, SEAT 2 DOOR, VINYL 1986 XJ CHEROKEE
Figure 47-2800

81J 047 2800

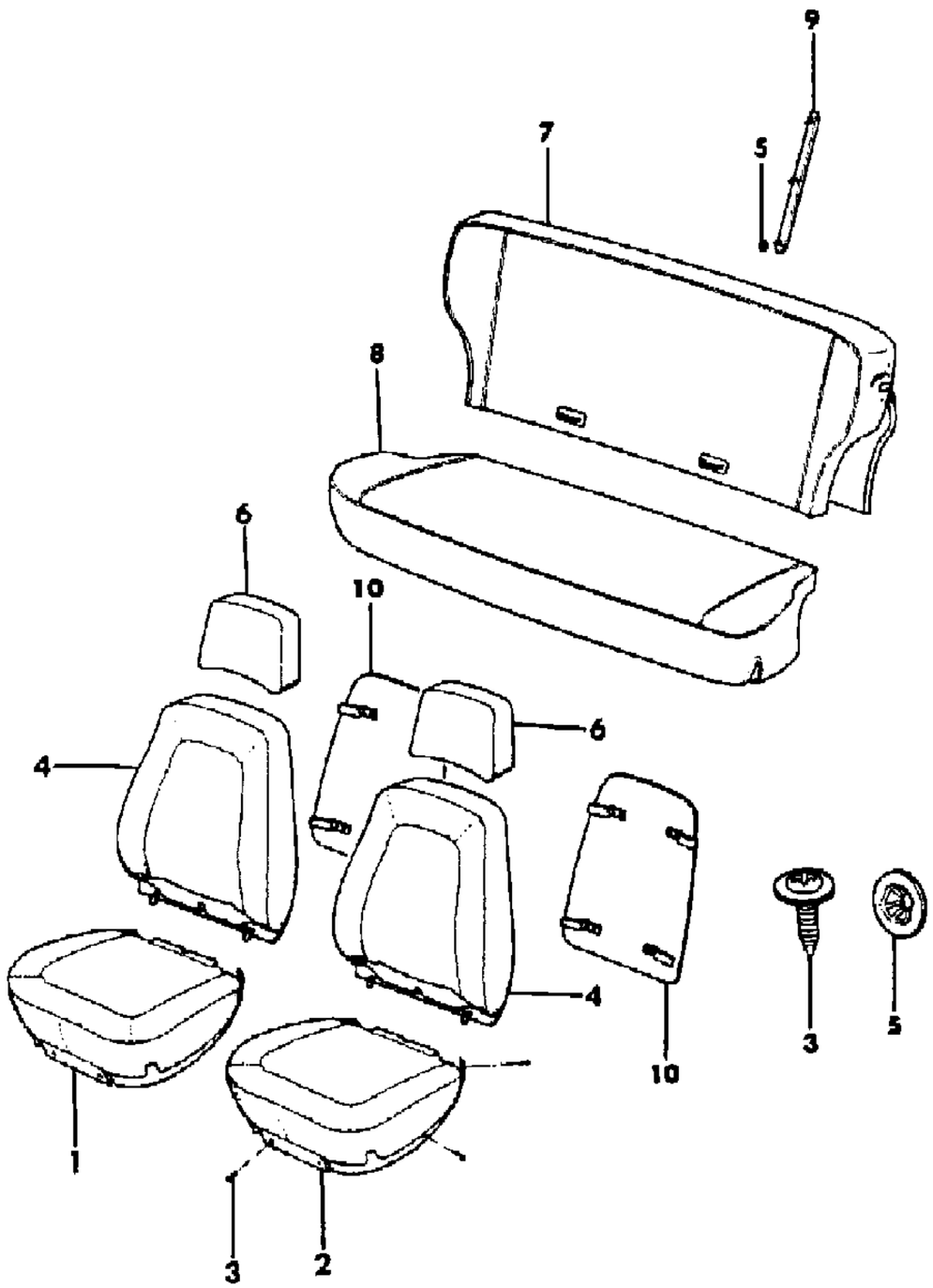

ITEM	PART NUMBER	QTY	BODY	MODEL	DESCRIPTION
1					COVER, Cushion
					Vinyl
	5500 8934	1			Black, 1PX
	5500 8938	1			Honey, 9PX
	5501 2138	1			Tan, 6PX
					Tooled Vinyl
	5501 2712	1			Black, 1QT
	5501 2708	1			Med. Blue, 3QT
	5501 2716	1			Garnet, 4QT
	5501 2720	1			Honey, 9QT
	5501 2146	1			Tan, 6QT
					Deluxe Vinyl
	5500 7862	1			Black, 1QV
	5500 7864	1			Med. Blue, 3QV
	5500 3918	1			Garnet, 4QV
	5500 6878	1			Honey, 9QV
2					COVER, Cushion
					Vinyl
	5500 8935	1			Black, 1PX
	5500 8939	1			Honey, 9PX
	5501 2139	1			Tan, 6PX
					Tooled Vinyl
	5501 2713	1			Black, 1QT
	5501 2709	1			Med. Blue, 3QT
	5501 2717	1			Garnet, 4QT
	5501 2721	1			Honey, 9QT
	5501 2147	1			Tan, 6QT
					Deluxe Vinyl
	5500 7863	1			Black, 1QV
	5500 7865	1			Med. Blue, 3QV
	5500 3919	1			Garnet, 4QV
	5500 6879	1			Honey, 9QV
3	3420 1314	12			SCREW
4					COVER, Back
					Vinyl
	5501 3442	2			Black, 1PX
	5501 3443	2			Honey, 9PX
	3501 2604	2			Tan, 6PX
					Tooled Vinyl

MODEL CODES

16=Cherokee 2 Dr.(1981-83)
17=Cherokee 2 Dr.(1981-83)
73=Cherokee 2WD-2 Dr.(1984-86)
74=Cherokee 2WD-4 Dr.(1984-86)
18=Cherokee 4 Dr.(1981-83)
77=Cherokee 4WD-2 Dr.(1984-86)
78=Cherokee 4WD-4 Dr.(1984-86)
85=CJ-5 (1981-83)
86=CJ-6(1981)
87=CJ-7(1981-86)
88=CJ-8, Scrambler(1981-86)
64=Comanche 2WD-6 Ft. Box(1986)
66=Comanche 2WD-7 Ft. Box(1986)
63=Comanche 4WD-6 Ft. Box(1986)
65=Comanche 4WD-7 Ft. Box(1986)
15=Grand Wagoneer 4 Dr.(1984-86)
25=J-10 Truck 7 Ft. Box(1981-84)
26=J10 Truck 8 Ft. Box(1981-86)
27=J-20 Truck 8 Ft. Box(1981-86)
15=Wagoneer 4 Dr.(1981-83)
75=Wagoneer 4WD-4 Dr.(1984-86)

BODY
CJ=CJ-5, CJ-6, CJ-7, CJ-8, Scrambler(1981-86)
MJ=Comanche Pickup(1986)

STYLES
SJ=Wagoneer(1981-83), Grand Wagoneer(1984-86), Cherokee(1981-83), J-10, J-20(1981-86)
XJ=Wagoneer(1984-86), Cherokee(1984-86)

AR = Use as Required - = Non Illustrated Part P.A.R. = Paint as Required

« RETURN TO GROUP INDEX »

COVERS, SEAT 2 DOOR, VINYL 1986 XJ CHEROKEE
Figure 47-2800

81J 047 2800

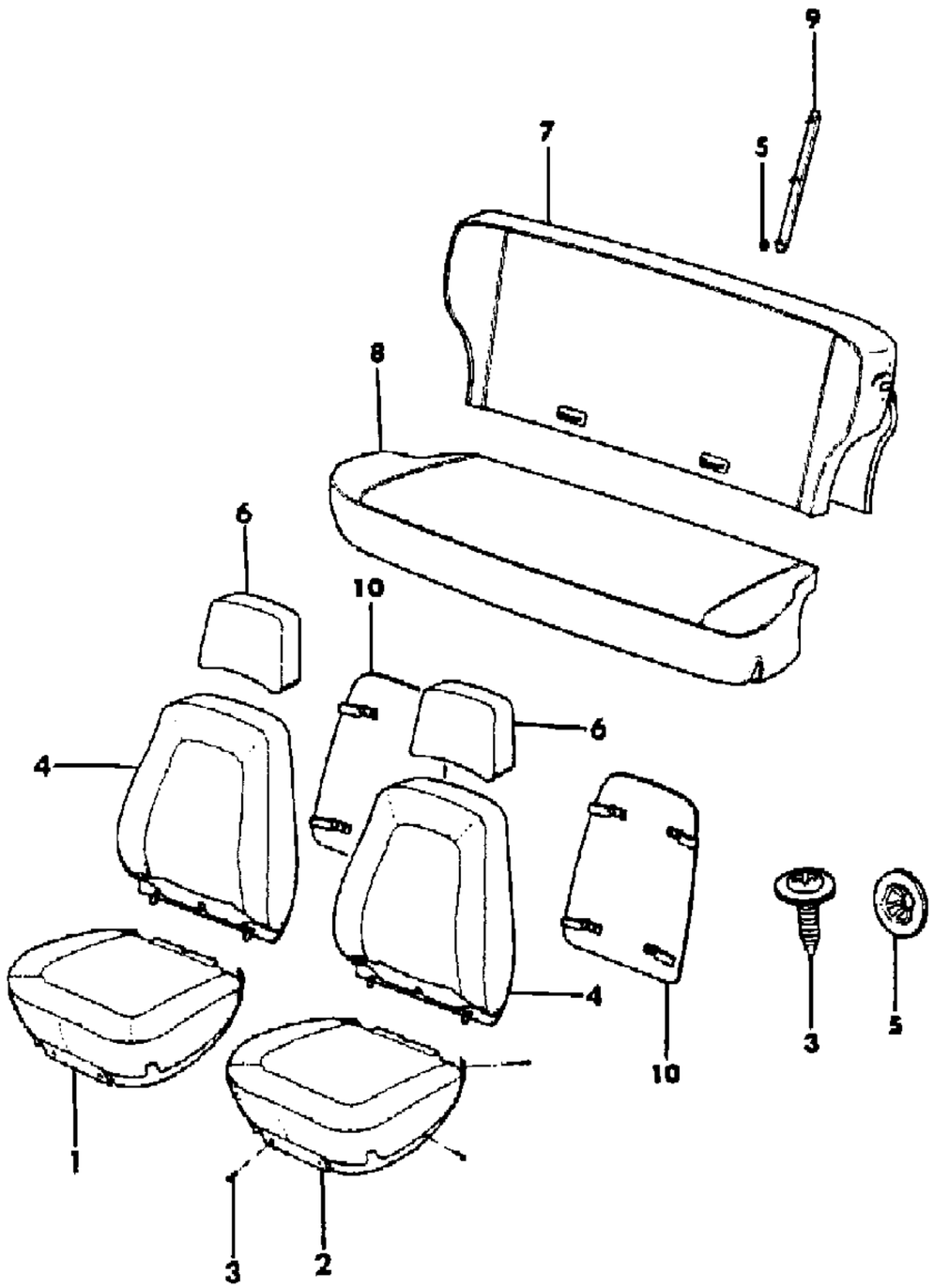

ITEM	PART NUMBER	QTY	BODY	MODEL	DESCRIPTION
	5501 2726	2			Black, 1QT
	5501 2724	2			Med. Blue, 3QT
	5501 2728	2			Garnet, 4QT
	5501 2730	2			Honey, 9QT
	5501 2174	2			Tan, 6QT
					Deluxe Vinyl
	5500 8970	2			Black, 1QV
	5500 8966	2			Med. Blue, 3QV
	5500 3966	2			Garnet, 4QV
	5500 6910	2			Honey, 9QV
5	3420 2014	12			NUT, Push
6					COVER, Headrest
	5500 9103	2			Black
	3500 7250	2			Med. Blue
	3500 1288	2			Garnet
	3500 6106	2			Honey
	3501 3109	2			Tan
7					COVER, Back
					Vinyl
	5500 9026	1			Black, 1PX
	5500 9027	1			Honey, 9PX
	5501 2256	1			Tan, 6PX
					Tooled Vinyl
	5501 2741	1			Black, 1QT
	5501 2740	1			Med. Blue, 3QT
	5501 2742	1			Garnet, 4QT
	5501 2743	1			Honey, 9QT
	5501 2260	1			Tan, 6QT
					Deluxe Vinyl
	5500 9029	1			Black, 1QV
	5500 9028	1			Med. Blue, 3QV
	5500 4014	1			Garnet, 4QV
	5500 6941	1			Honey, 9QV
8					COVER, Cushion
					Vinyl
	5500 9016	1			Black, 1PX
	5500 9017	1			Honey, 9PX
	5501 2242	1			Tan, 6PX
					Tooled Vinyl

MODEL CODES

16=Cherokee 2 Dr.(1981-83)	78=Cherokee 4WD-4 Dr.(1984-86)	64=Comanche 2WD-6 Ft. Box(1986)	25=J-10 Truck 7 Ft. Box(1981-84)
17=Cherokee 2 Dr.(1981-83)	85=CJ-5 (1981-83)	66=Comanche 2WD-7 Ft. Box(1986)	26=J10 Truck 8 Ft. Box(1981-86)
73=Cherokee 2WD-2 Dr.(1984-86)	86=CJ-6(1981)	63=Comanche 4WD-6 Ft. Box(1986)	27=J-20 Truck 8 Ft. Box(1981-86)
74=Cherokee 2WD-4 Dr.(1984-86)	87=CJ-7(1981-86)	65=Comanche 4WD-7 Ft. Box(1986)	15=Wagoneer 4 Dr.(1981-83)
18=Cherokee 4 Dr.(1981-83)	88=CJ-8, Scrambler(1981-86)	15=Grand Wagoneer 4 Dr.(1984-86)	75=Wagoneer 4WD-4 Dr.(1984-86)
77=Cherokee 4WD-2 Dr.(1984-86)			

BODY
CJ=CJ-5, CJ-6, CJ-7, CJ-8, Scrambler(1981-86)
MJ=Comanche Pickup(1986)

STYLES
SJ=Wagoneer(1981-83), Grand Wagoneer(1984-86), Cherokee(1981-83), J-10, J-20(1981-86)
XJ=Wagoneer(1984-86), Cherokee(1984-86)

AR = Use as Required - = Non Illustrated Part P.A.R. = Paint as Required

COVERS, SEAT 2 DOOR, VINYL 1986 XJ CHEROKEE
Figure 47-2800

81J 047 2800

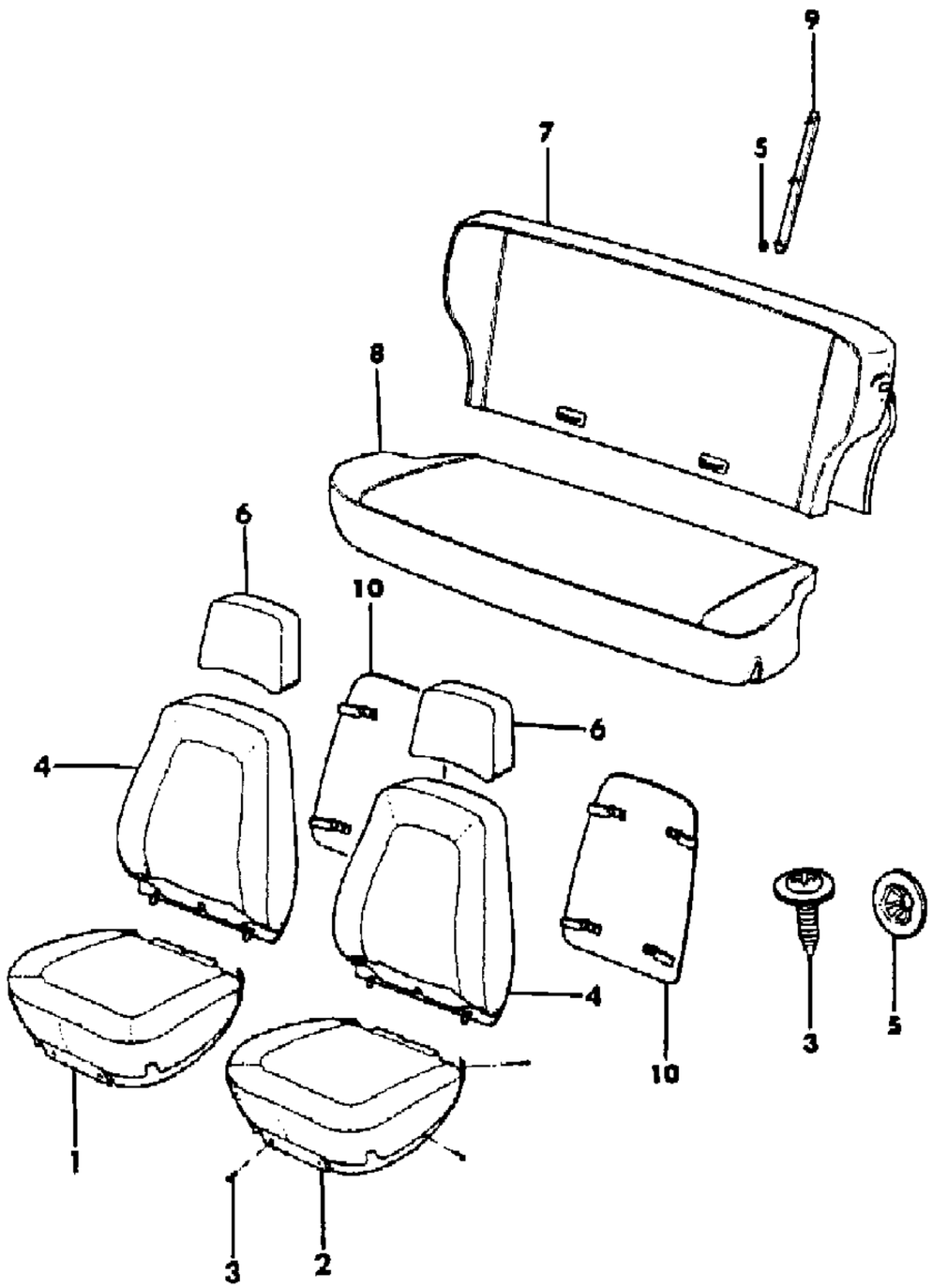

ITEM	PART NUMBER	QTY	BODY	MODEL	DESCRIPTION
	5501 2737	1			Black, 1QT
	5501 2736	1			Med. Blue, 3QT
	5501 2738	1			Garnet, 4QT
	5501 2739	1			Honey, 9QT
	5501 2246	1			Tan, 6QT
					Deluxe Vinyl
	5500 9019	1			Black, 1QV
	5500 9018	1			Med. Blue, 3QV
	5500 4002	1			Garnet, 4QV
	5500 6939	1			Honey, 9QV
9	5500 1076	6			STRIP, Skid ***
10					PANEL, Kick
					Tooled Vinyl
	5500 8770	2			Black, 1QT
	5500 8375	2			Med. Blue, 3QT
	5500 8370	2			Garnet, 4QT
	5500 8771	2			Honey, 9QT
	5500 7065	2			Tan, 6QT
					Deluxe Vinyl
	5500 8770	2			Black, 1QV
	5500 8375	2			Med. Blue, 3QV
	5500 8370	2			Garnet, 4QV
	5500 8371	2			Honey, 9QV

MODEL CODES

16=Cherokee 2 Dr.(1981-83)
17=Cherokee 2 Dr.(1981-83)
73=Cherokee 2WD-2 Dr.(1984-86)
74=Cherokee 2WD-4 Dr.(1984-86)
18=Cherokee 4 Dr.(1981-83)
77=Cherokee 4WD-2 Dr.(1984-86)
78=Cherokee 4WD-4 Dr.(1984-86)
85=CJ-5 (1981-83)
86=CJ-6(1981)
87=CJ-7(1981-86)
88=CJ-8, Scrambler(1981-86)
64=Comanche 2WD-6 Ft. Box(1986)
66=Comanche 2WD-7 Ft. Box(1986)
63=Comanche 4WD-6 Ft. Box(1986)
65=Comanche 4WD-7 Ft. Box(1986)
15=Grand Wagoneer 4 Dr.(1984-86)
25=J-10 Truck 7 Ft. Box(1981-84)
26=J10 Truck 8 Ft. Box(1981-86)
27=J-20 Truck 8 Ft. Box(1981-86)
15=Wagoneer 4 Dr.(1981-83)
75=Wagoneer 4WD-4 Dr.(1984-86)

BODY
CJ=CJ-5, CJ-6, CJ-7, CJ-8, Scrambler(1981-86)
MJ=Comanche Pickup(1986)

STYLES
SJ=Wagoneer(1981-83), Grand Wagoneer(1984-86), Cherokee(1981-83), J-10, J-20(1981-86)
XJ=Wagoneer(1984-86), Cherokee(1984-86)

AR = Use as Required - = Non Illustrated Part P.A.R. = Paint as Required

« RETURN TO GROUP INDEX

COVERS, FRONT SEAT 4 DOOR, CLOTH, 1984-85 XJ CHEROKEE
Figure 47-2900

81J 047 2900

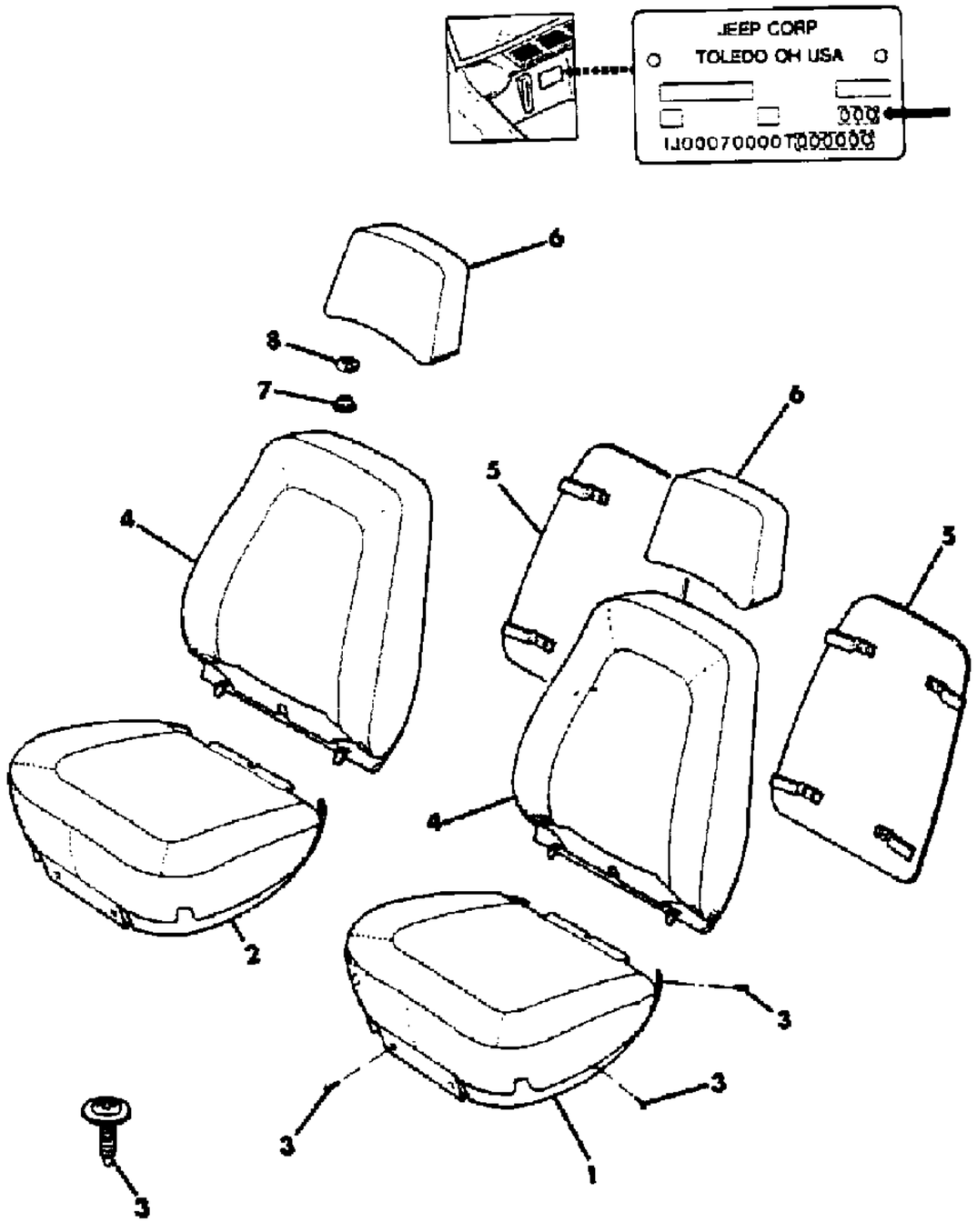

ITEM	PART NUMBER	QTY	BODY	MODEL	DESCRIPTION
1					COVER, Cushion
					Trim Code:
	5500 3929	1			3QU
	5500 8951	1			3QUP
	5500 3937	1			4QU
	5500 3945	1			4QW
	5500 3941	1			5QU
	5500 3933	1			6QU
	5500 6885	1			9QU
	5500 3949	1			9QW
2					COVER, Cushion
					Trim Code:
	5500 3928	1			3QU
	5500 8950	1			3QUP
	5500 3936	1			4QU
	5500 3944	1			4QW
	5500 3940	1			5QU
	5500 3932	1			6QU
	5500 6884	1			9QU
	5500 3948	1			9QW
3	3420 1314	12			SCREW
4					COVER, Back
					Trim Code:
	5500 3976	2			3QU
	5500 8986	2			3QUP
	5500 3984	2			4QU
	5500 3992	2			4QW
	5500 3988	2			5QU
	5500 3980	2			6QU
	5500 6928	2			9QU
	5500 3996	2			9QW
5					PANEL, Seat Back
					Trim Code:
	5500 4577	2			3QU
	5500 8375	2			3QUP
	5500 4579	2			4QU
	5500 4579	2			4QW, 1984
	5500 4581	2			4QW, 1985
	5500 4580	2			5QU

MODEL CODES

16=Cherokee 2 Dr.(1981-83)	78=Cherokee 4WD-4 Dr.(1984-86)	64=Comanche 2WD-6 Ft. Box(1986)	25=J-10 Truck 7 Ft. Box(1981-84)
17=Cherokee 2 Dr.(1981-83)	85=CJ-5 (1981-83)	66=Comanche 2WD-7 Ft. Box(1986)	26=J10 Truck 8 Ft. Box(1981-86)
73=Cherokee 2WD-2 Dr.(1984-86)	86=CJ-6(1981)	63=Comanche 4WD-6 Ft. Box(1986)	27=J-20 Truck 8 Ft. Box(1981-86)
74=Cherokee 2WD-4 Dr.(1984-86)	87=CJ-7(1981-86)	65=Comanche 4WD-7 Ft. Box(1986)	15=Wagoneer 4 Dr.(1981-83)
18=Cherokee 4 Dr.(1981-83)	88=CJ-8, Scrambler(1981-86)	15=Grand Wagoneer 4 Dr.(1984-86)	75=Wagoneer 4WD-4 Dr.(1984-86)
77=Cherokee 4WD-2 Dr.(1984-86)			

BODY
CJ=CJ-5, CJ-6, CJ-7, CJ-8, Scrambler(1981-86)
MJ=Comanche Pickup(1986)

STYLES
SJ=Wagoneer(1981-83), Grand Wagoneer(1984-86), Cherokee(1981-83), J-10, J-20(1981-86)
XJ=Wagoneer(1984-86), Cherokee(1984-86)

AR = Use as Required - = Non Illustrated Part P.A.R. = Paint as Required

COVERS, FRONT SEAT 4 DOOR, CLOTH, 1984-85 XJ CHEROKEE
Figure 47-2900

81J 047 2900

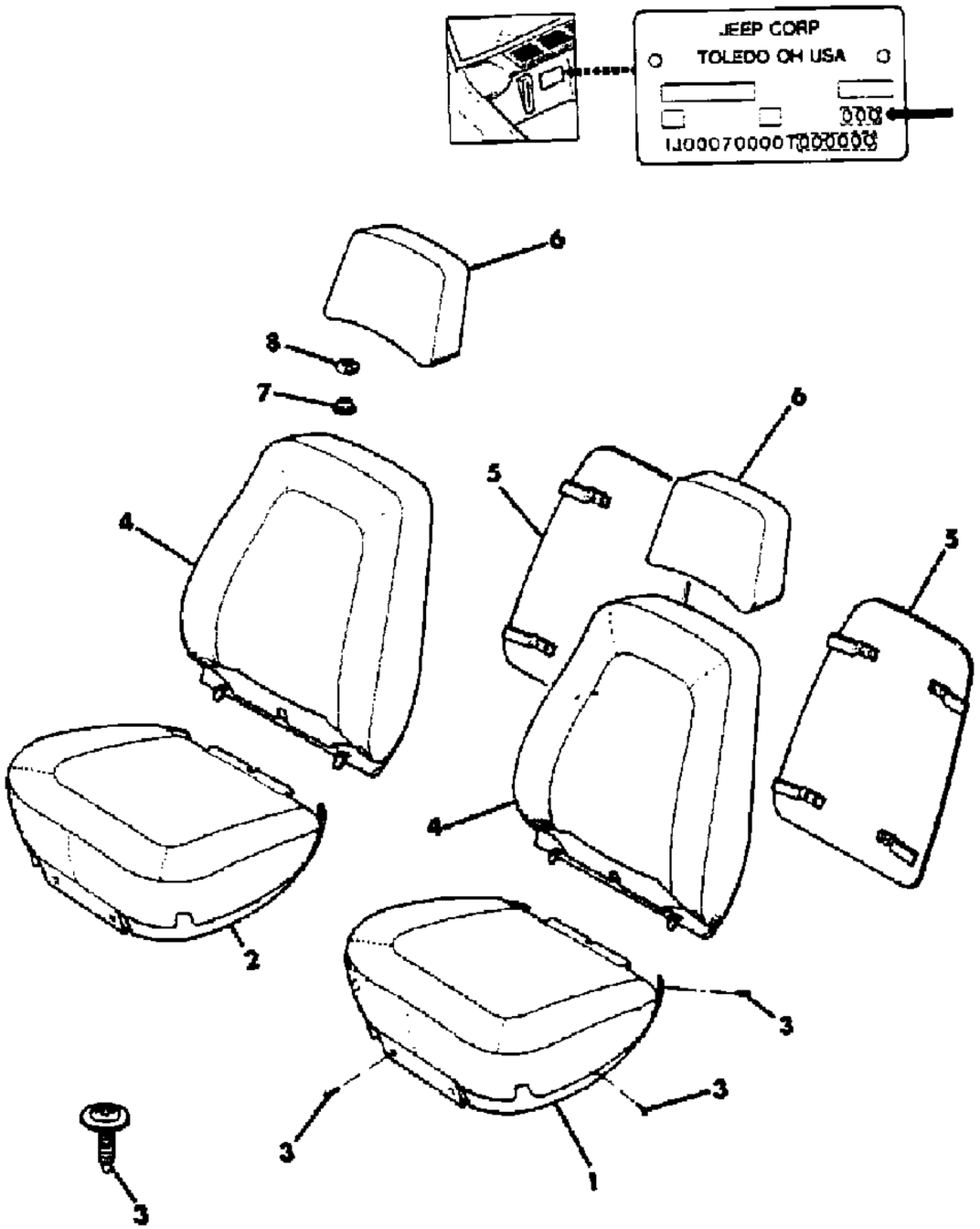

ITEM	PART NUMBER	QTY	BODY	MODEL	DESCRIPTION
	5500 4578	2			6QU
	5500 6120	2			9QU
	5500 6121	2			9QW
6					COVER, Headrest
	3500 1287	2			Almond
	3500 7250	2			Med. Blue
	5500 6950	2			Slate Blue
	3500 1288	2			Garnet
	3500 6106	2			Honey
	3500 1289	2			Nutmeg
7					EYELET, Lower ***
	3500 3381	4			Almond
	3500 8661	4			Slate Blue
	3500 3382	4			Garnet
	3500 3383	4			Nutmeg
8					EYELET, Upper ***
	3500 3122	4			Almond
	3500 8660	4			Slate Blue
	3500 3123	4			Garnet
	3500 3124	4			Nutmeg

MODEL CODES
16=Cherokee 2 Dr.(1981-83)
17=Cherokee 2 Dr.(1981-83)
73=Cherokee 2WD-2 Dr.(1984-86)
74=Cherokee 2WD-4 Dr.(1984-86)
18=Cherokee 4 Dr.(1981-83)
77=Cherokee 4WD-2 Dr.(1984-86)
78=Cherokee 4WD-4 Dr.(1984-86)
85=CJ-5 (1981-83)
86=CJ-6(1981)
87=CJ-7(1981-86)
88=CJ-8, Scrambler(1981-86)
64=Comanche 2WD-6 Ft. Box(1986)
66=Comanche 2WD-7 Ft. Box(1986)
63=Comanche 4WD-6 Ft. Box(1986)
65=Comanche 4WD-7 Ft. Box(1986)
15=Grand Wagoneer 4 Dr.(1984-86)
25=J-10 Truck 7 Ft. Box(1981-84)
26=J10 Truck 8 Ft. Box(1981-86)
27=J-20 Truck 8 Ft. Box(1981-86)
15=Wagoneer 4 Dr.(1981-83)
75=Wagoneer 4WD-4 Dr.(1984-86)

BODY
CJ=CJ-5, CJ-6, CJ-7, CJ-8, Scrambler(1981-86)
MJ=Comanche Pickup(1986)

STYLES
SJ=Wagoneer(1981-83), Grand Wagoneer(1984-86), Cherokee(1981-83), J-10, J-20(1981-86)
XJ=Wagoneer(1984-86), Cherokee(1984-86)

AR = Use as Required - = Non Illustrated Part P.A.R. = Paint as Required

« RETURN TO GROUP INDEX

COVERS, SEAT 4 DOOR, CLOTH AND LEATHER, 1986 XJ CHEROKEE
Figure 47-3000

81J 047 3000

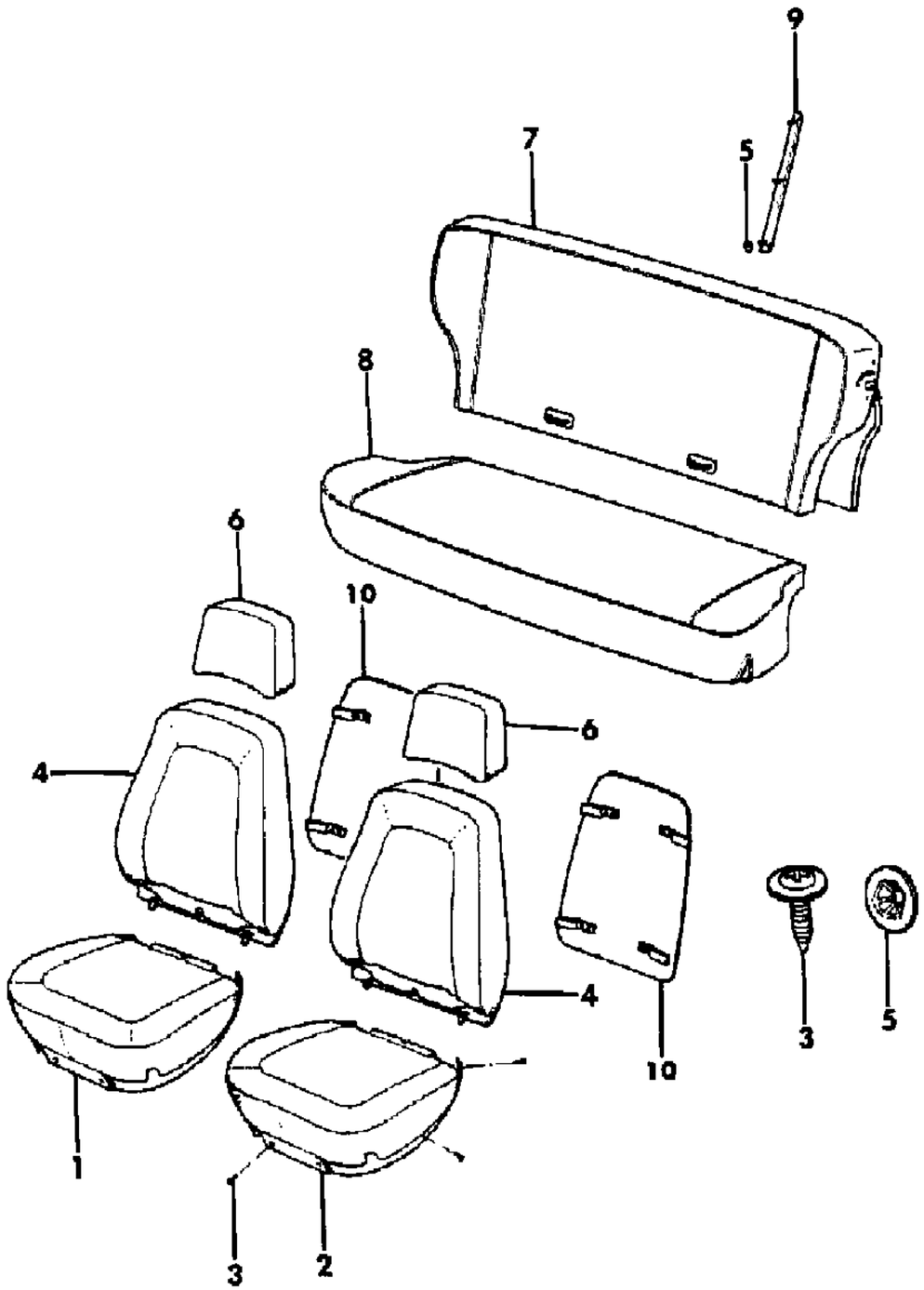

ITEM	PART NUMBER	QTY	BODY	MODEL	DESCRIPTION
1					COVER, Cushion
					Highland Check Cloth
	5500 3944	1			Garnet, 4QW
	5500 3948	1			Honey, 9QW
					Hunter Plaid Cloth
	5501 2164	1			Tan, 6QW
					Leather
	5501 9034	1			Black, 1QL (Up To Veh. No. 175679)
	5501 9334	1			Graphite, 1QL (After Veh. No. 175679)
					Mesa Cloth
	5500 8952	1			Black, 1QU
	5500 8950	1			Med. Blue, 3QU
	5500 8954	1			Garnet, 4QU
	5500 8956	1			Honey, 9QU
	5501 2156	1			Tan, 6QU
2					COVER, Cushion
					Highland Check Cloth
	5500 3945	1			Garnet, 4QW
	5500 3949	1			Honey, 9QW
					Hunter Plaid Cloth
	5501 2165	1			Tan, 6QW
					Leather
	5501 9035	1			Black, 1QL (Up To Veh. No. 175679)
	5501 9335	1			Graphite, 1QL (After Veh. No. 175679)
					Mesa Cloth
	5500 8953	1			Black, 1QU
	5500 8951	1			Med. Blue, 3QU
	5500 8955	1			Garnet, 4QU
	5500 8957	1			Honey, 9QU
	5501 2157	1			Honey, 9QU
	5501 2157	1			Tan, 6QU
3	3420 1314	12			SCREW
4					Cover, Back ***
					Highland Check Cloth
	5500 3992	2			Garnet, 4QW
	5500 3996	2			Honey, 9QW
					Hunter Plaid Cloth
	5501 2192	2			Tan, 6QW
					Leather

MODEL CODES

16=Cherokee 2 Dr.(1981-83)	78=Cherokee 4WD-4 Dr.(1984-86)	64=Comanche 2WD-6 Ft. Box(1986)	25=J-10 Truck 7 Ft. Box(1981-84)
17=Cherokee 2 Dr.(1981-83)	85=CJ-5 (1981-83)	66=Comanche 2WD-7 Ft. Box(1986)	26=J10 Truck 8 Ft. Box(1981-86)
73=Cherokee 2WD-2 Dr.(1984-86)	86=CJ-6(1981)	63=Comanche 4WD-6 Ft. Box(1986)	27=J-20 Truck 8 Ft. Box(1981-86)
74=Cherokee 2WD-4 Dr.(1984-86)	87=CJ-7(1981-86)	65=Comanche 4WD-7 Ft. Box(1986)	15=Wagoneer 4 Dr.(1981-83)
18=Cherokee 4 Dr.(1981-83)	88=CJ-8, Scrambler(1981-86)	15=Grand Wagoneer 4 Dr.(1984-86)	75=Wagoneer 4WD-4 Dr.(1984-86)
77=Cherokee 4WD-2 Dr.(1984-86)			

BODY
CJ=CJ-5, CJ-6, CJ-7, CJ-8, Scrambler(1981-86)
MJ=Comanche Pickup(1986)

STYLES
SJ=Wagoneer(1981-83), Grand Wagoneer(1984-86), Cherokee(1981-83), J-10, J-20(1981-86)
XJ=Wagoneer(1984-86), Cherokee(1984-86)

AR = Use as Required - = Non Illustrated Part P.A.R. = Paint as Required

COVERS, SEAT 4 DOOR, CLOTH AND LEATHER, 1986 XJ CHEROKEE
Figure 47-3000

81J 047 3000

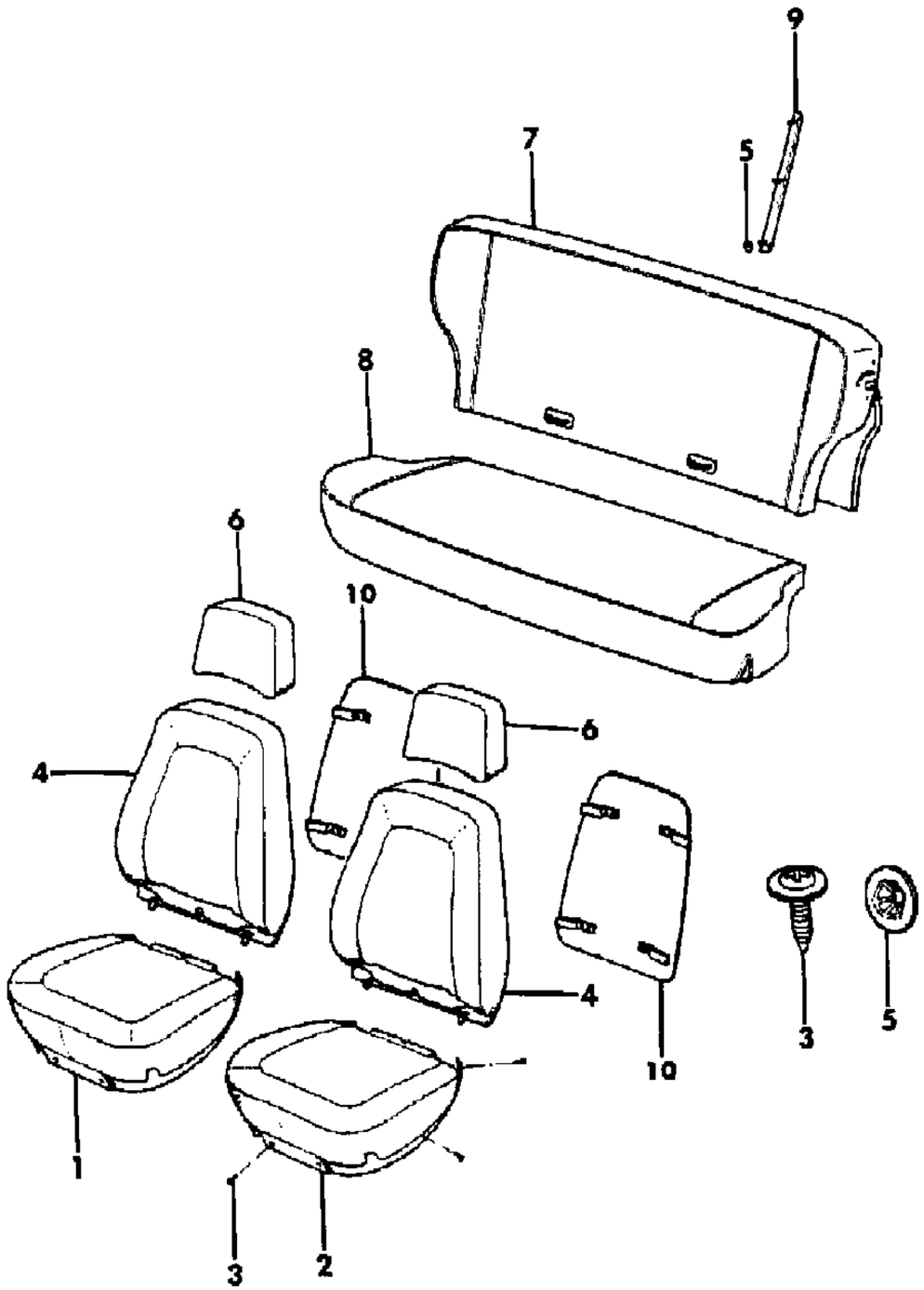

ITEM	PART NUMBER	QTY	BODY	MODEL	DESCRIPTION
	5501 9039	2			Black, 1QL (Up To Veh. No. 175679)
	5501 9036	2			Graphite, 1QL (After Veh. No. 175679)
					Mesa Cloth
	5500 8990	2			Black, 1QU
	5500 8986	2			Med. Blue, 3QU
	5500 8994	2			Garnet, 4QU
	5500 8998	2			Honey, 9QU
	5501 2184	2			Tan, 6QU
5	3420 2014	12			NUT, Push
6					COVER, Headrest
	5500 9103	2			Black
	5501 9042	2			Black, Leather, 1QL
	3500 7250	2			Med. Blue
	3500 1288	2			Garnet
	5501 9214	2			Graphite, Leather, 1QL
	3500 6106	2			Honey
	3501 3109	2			Tan
7					COVER, Back
					Highland Check Cloth
	5500 7410	1			Garnet, 4QW
	5500 4021	1			Honey, 9QW
					Hunter Plaid
	5501 2268	1			Tan, 6QW
					Leather
					Black, 1QL ((Up To Veh. No. 175679)
	5502 0002	1			Graphite, 1QL (After Veh. No. 175679)
					Mesa Cloth
	5500 9033	1			Black, 1QU
	5500 9032	1			Med. Blue, 3QU
	5500 9034	1			Garnet, 4QU
	5500 9035	1			Honey, 9QU
	5501 2264	1			Tan, 6QU
8					COVER, Cushion
					Highland Check Cloth
	5500 4008	1			Garnet, 4Qw
	5500 4009	1			Honey, 9QW
					Hunter Plaid
	5501 2254	1			Tan, 6QW
					Leather

MODEL CODES

16=Cherokee 2 Dr.(1981-83)	78=Cherokee 4WD-4 Dr.(1984-86)	64=Comanche 2WD-6 Ft. Box(1986)	25=J-10 Truck 7 Ft. Box(1981-84)
17=Cherokee 2 Dr.(1981-83)	85=CJ-5 (1981-83)	66=Comanche 2WD-7 Ft. Box(1986)	26=J10 Truck 8 Ft. Box(1981-86)
73=Cherokee 2WD-2 Dr.(1984-86)	86=CJ-6(1981)	63=Comanche 4WD-6 Ft. Box(1986)	27=J-20 Truck 8 Ft. Box(1981-86)
74=Cherokee 2WD-4 Dr.(1984-86)	87=CJ-7(1981-86)	65=Comanche 4WD-7 Ft. Box(1986)	15=Wagoneer 4 Dr.(1981-83)
18=Cherokee 4 Dr.(1981-83)	88=CJ-8, Scrambler(1981-86)	15=Grand Wagoneer 4 Dr.(1984-86)	75=Wagoneer 4WD-4 Dr.(1984-86)
77=Cherokee 4WD-2 Dr.(1984-86)			

BODY
CJ=CJ-5, CJ-6, CJ-7, CJ-8, Scrambler(1981-86)
MJ=Comanche Pickup(1986)

STYLES
SJ=Wagoneer(1981-83), Grand Wagoneer(1984-86), Cherokee(1981-83), J-10, J-20(1981-86)
XJ=Wagoneer(1984-86), Cherokee(1984-86)

AR = Use as Required - = Non Illustrated Part P.A.R. = Paint as Required

COVERS, SEAT 4 DOOR, CLOTH AND LEATHER, 1986 XJ CHEROKEE
Figure 47-3000

81J 047 3000

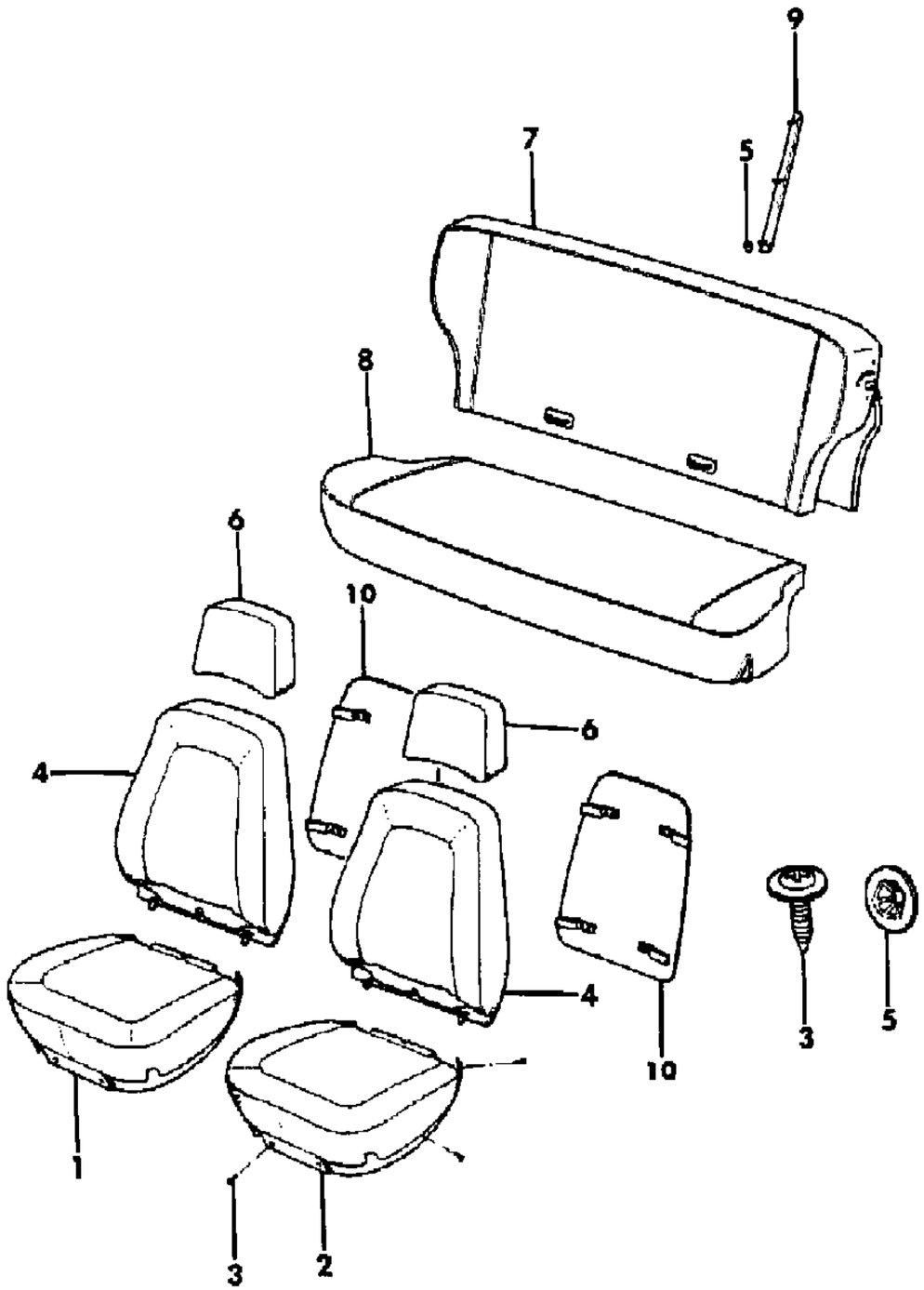

ITEM	PART NUMBER	QTY	BODY	MODEL	DESCRIPTION
	5501 9040	1			Black, 1QL (Up To Veh. No. 175679)
	5501 9329	1			Graphite, 1QL (After Veh. No. 175679)
					Mesa Cloth
	5500 9023	1			Black, 1QU
	5500 9022	1			Med. Blue, 3QU
	5500 9024	1			Garnet, 4QU
	5500 9025	1			Honey, 9QU
	5501 2250	1			Tan, 6QU
9	5500 1076	6			STRIP, Skid ***
10					Panel, Kick ***
					Highland Check Cloth
	5500 8372	2			Garnet, 4QW
	5500 8373	2			Honey, 9QW
					Hunter Plaid
	5501 2074	2			Tan, 6QW
					Leather
	5501 8894	2			Black, 1QL (Up To Veh. No. 175679)
	5501 8804	2			Graphite, 1QL (After Veh. No. 175679)
					Mesa Cloth
	5500 8770	2			Black, 1QU
	5500 8375	2			Med. Blue, 3QU
	5500 8370	2			Garnet, 4QU
	5500 8371	2			Honey, 9QU
	5500 7065	2			Tan, 6QU

MODEL CODES

16=Cherokee 2 Dr.(1981-83)
17=Cherokee 2 Dr.(1981-83)
73=Cherokee 2WD-2 Dr.(1984-86)
74=Cherokee 2WD-4 Dr.(1984-86)
18=Cherokee 4 Dr.(1981-83)
77=Cherokee 4WD-2 Dr.(1984-86)
78=Cherokee 4WD-4 Dr.(1984-86)
85=CJ-5 (1981-83)
86=CJ-6(1981)
87=CJ-7(1981-86)
88=CJ-8, Scrambler(1981-86)
64=Comanche 2WD-6 Ft. Box(1986)
66=Comanche 2WD-7 Ft. Box(1986)
63=Comanche 4WD-6 Ft. Box(1986)
65=Comanche 4WD-7 Ft. Box(1986)
15=Grand Wagoneer 4 Dr.(1984-86)
25=J-10 Truck 7 Ft. Box(1981-84)
26=J10 Truck 8 Ft. Box(1981-86)
27=J-20 Truck 8 Ft. Box(1981-86)
15=Wagoneer 4 Dr.(1981-83)
75=Wagoneer 4WD-4 Dr.(1984-86)

BODY
CJ=CJ-5, CJ-6, CJ-7, CJ-8, Scrambler(1981-86)
MJ=Comanche Pickup(1986)

STYLES
SJ=Wagoneer(1981-83), Grand Wagoneer(1984-86), Cherokee(1981-83), J-10, J-20(1981-86)
XJ=Wagoneer(1984-86), Cherokee(1984-86)

AR = Use as Required - = Non Illustrated Part P.A.R. = Paint as Required

« RETURN TO GROUP INDEX

COVERS, FRONT SEAT 4 DOOR, VINYL, 1984-85 XJ CHEROKEE
Figure 47-3100

81J 047 3100

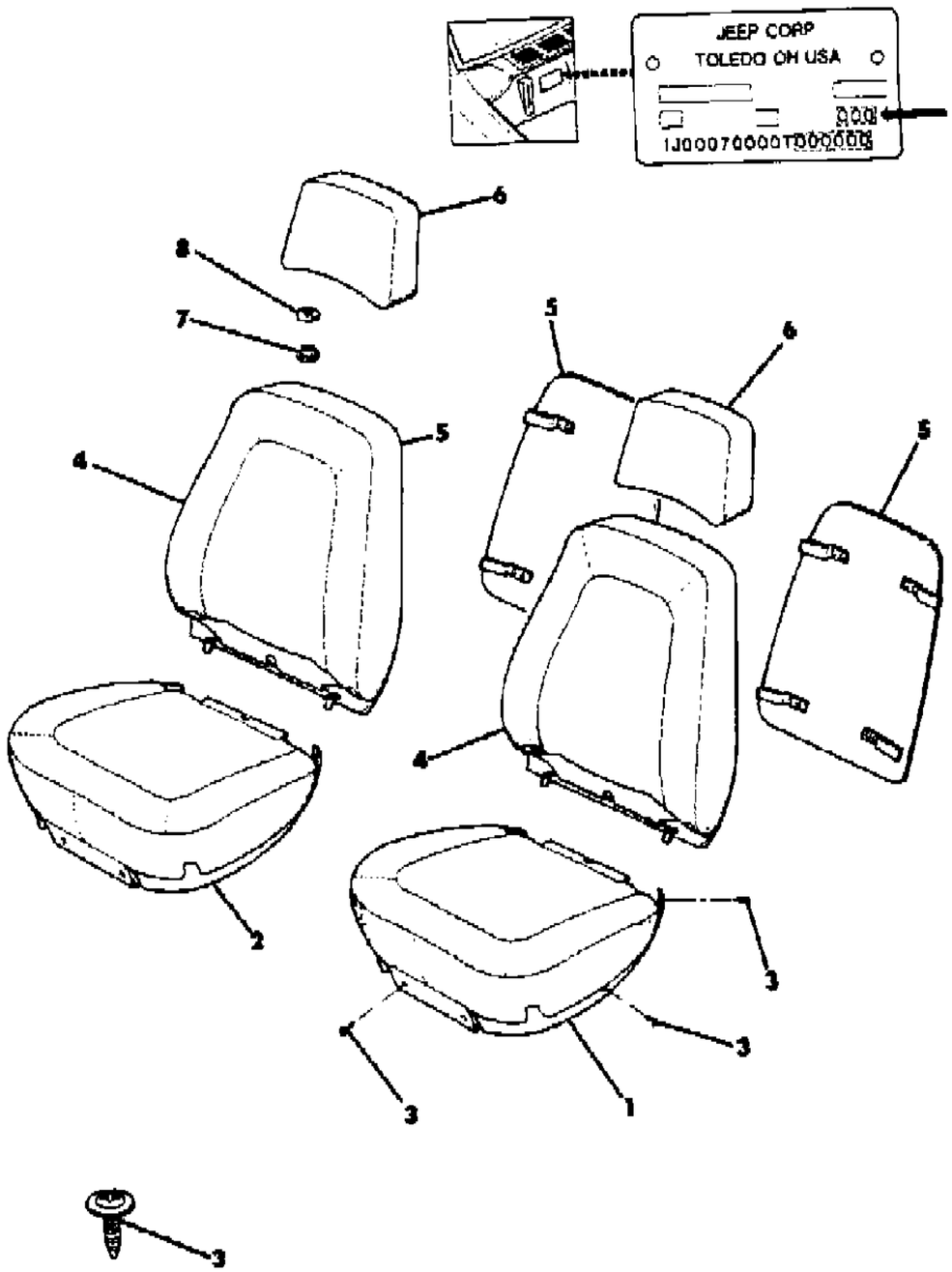

ITEM	PART NUMBER	QTY	BODY	MODEL	DESCRIPTION
1					COVER, Cushion
					Trim Code:
	5500 3905	1			3PX
	5500 3913	1			3QV
	5500 8943	1			3QVP
	5500 3921	1			4QV
	5500 3925	1			5QV
	5500 3909	1			6PX
	5500 3917	1			6QV
	5500 6881	1			9QV
2					COVER, Cushion
					Trim Code:
	5500 3904	1			3PX
	5500 3912	1			3QV
	5500 8942	1			3QVP
	5500 3920	1			4QV
	5500 3924	1			5QV
	5500 3908	1			6PX
	5500 3916	1			6QV
	5500 6880	1			9QV
3	3420 1314	12			SCREW
4					COVER, Back
					Trim Code:
	5500 3952	2			3PX
	5500 3960	2			3QV
	5500 8968	2			3QVP
	5500 3968	2			4QV
	5500 3972	2			5QV
	5500 3956	2			6PX
	5500 3964	2			6QV
	5500 6912	2			9QV
5					PANEL, Seat Back
					Trim Code:
	5500 4575	2			3PX
	5500 4577	2			3QV
	5500 8375	2			3QVP
	5500 4579	2			4QV
	5500 4580	2			5QV
	5500 4576	2			6PX

MODEL CODES

16=Cherokee 2 Dr.(1981-83)
17=Cherokee 2 Dr.(1981-83)
73=Cherokee 2WD-2 Dr.(1984-86)
74=Cherokee 2WD-4 Dr.(1984-86)
18=Cherokee 4 Dr.(1981-83)
77=Cherokee 4WD-2 Dr.(1984-86)
78=Cherokee 4WD-4 Dr.(1984-86)
85=CJ-5 (1981-83)
86=CJ-6(1981)
87=CJ-7(1981-86)
88=CJ-8, Scrambler(1981-86)
64=Comanche 2WD-6 Ft. Box(1986)
66=Comanche 2WD-7 Ft. Box(1986)
63=Comanche 4WD-6 Ft. Box(1986)
65=Comanche 4WD-7 Ft. Box(1986)
15=Grand Wagoneer 4 Dr.(1984-86)
25=J-10 Truck 7 Ft. Box(1981-84)
26=J10 Truck 8 Ft. Box(1981-86)
27=J-20 Truck 8 Ft. Box(1981-86)
15=Wagoneer 4 Dr.(1981-83)
75=Wagoneer 4WD-4 Dr.(1984-86)

BODY

CJ=CJ-5, CJ-6, CJ-7, CJ-8, Scrambler(1981-86)
MJ=Comanche Pickup(1986)

STYLES

SJ=Wagoneer(1981-83), Grand Wagoneer(1984-86), Cherokee(1981-83), J-10, J-20(1981-86)
XJ=Wagoneer(1984-86), Cherokee(1984-86)

AR = Use as Required - = Non Illustrated Part P.A.R. = Paint as Required

« RETURN TO GROUP INDEX »

COVERS, FRONT SEAT 4 DOOR, VINYL, 1984-85 XJ CHEROKEE
Figure 47-3100

81J 047 3100

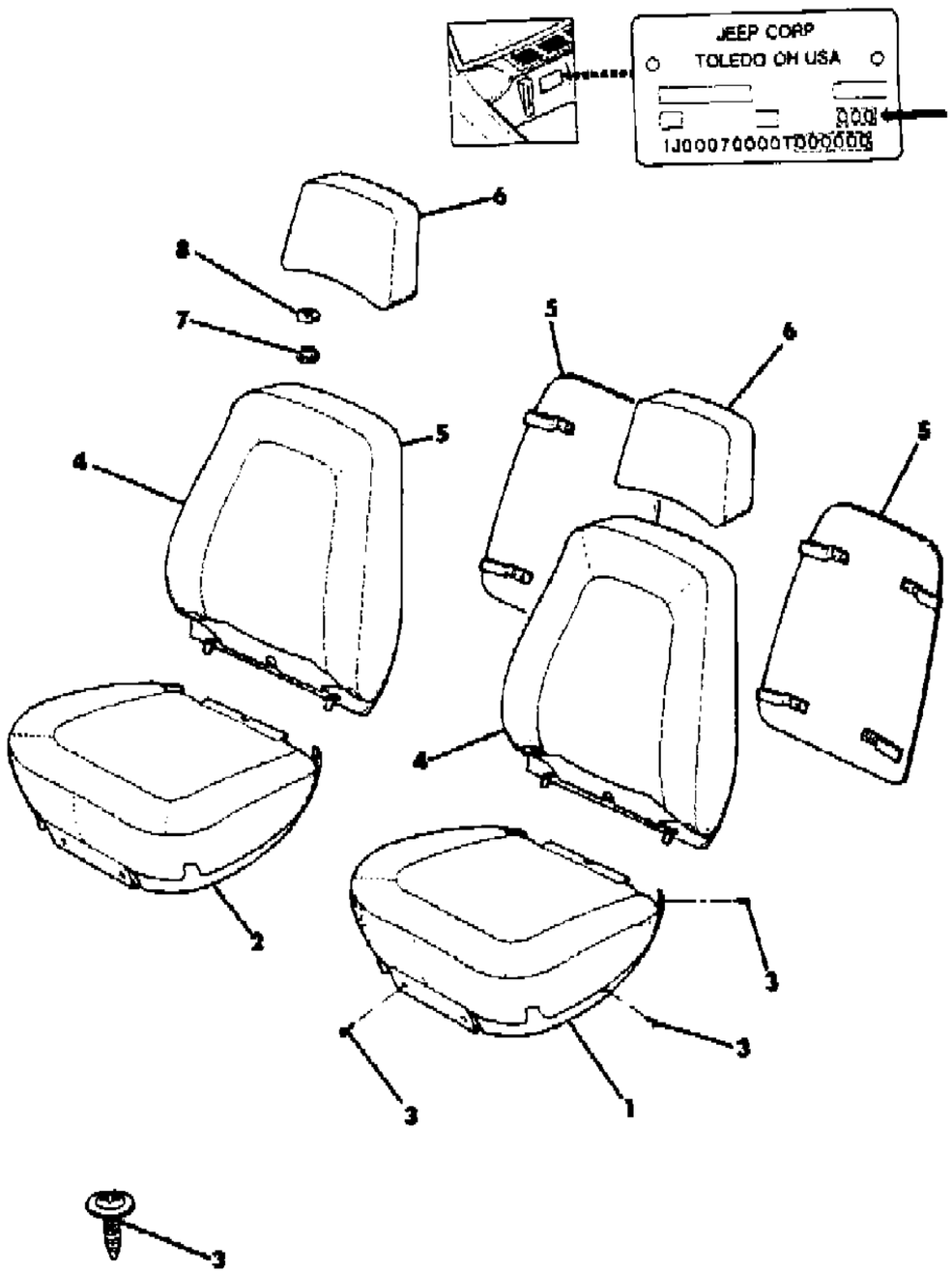

ITEM	PART NUMBER	QTY	BODY	MODEL	DESCRIPTION
	5500 4578	2			6QV
	5500 6120	2			9QV
6					COVER, Headrest
	3500 1287	2			Almond
	3500 7250	2			Med. Blue
	5500 6950	2			Slate Blue
	3500 1288	2			Garnet
	3500 6106	2			Honey
	3500 1289	2			Nutmeg
7					EYELET, Lower ***
	3500 3381	4			Almond
	3500 8661	4			Slate Blue
	3500 3382	4			Garnet
	3500 3383	4			Nutmeg
8					EYELET, Upper ***
	3500 3122	4			Almond
	3500 8660	4			Slate Blue
	3500 3123	4			Garnet
	3500 3124	4			Nutmeg

MODEL CODES

16=Cherokee 2 Dr.(1981-83)	78=Cherokee 4WD-4 Dr.(1984-86)	64=Comanche 2WD-6 Ft. Box(1986)	25=J-10 Truck 7 Ft. Box(1981-84)
17=Cherokee 2 Dr.(1981-83)	85=CJ-5 (1981-83)	66=Comanche 2WD-7 Ft. Box(1986)	26=J10 Truck 8 Ft. Box(1981-86)
73=Cherokee 2WD-2 Dr.(1984-86)	86=CJ-6(1981)	63=Comanche 4WD-6 Ft. Box(1986)	27=J-20 Truck 8 Ft. Box(1981-86)
74=Cherokee 2WD-4 Dr.(1984-86)	87=CJ-7(1981-86)	65=Comanche 4WD-7 Ft. Box(1986)	15=Wagoneer 4 Dr.(1981-83)
18=Cherokee 4 Dr.(1981-83)	88=CJ-8, Scrambler(1981-86)	15=Grand Wagoneer 4 Dr.(1984-86)	75=Wagoneer 4WD-4 Dr.(1984-86)
77=Cherokee 4WD-2 Dr.(1984-86)			

BODY
CJ=CJ-5, CJ-6, CJ-7, CJ-8, Scrambler(1981-86)
MJ=Comanche Pickup(1986)

STYLES
SJ=Wagoneer(1981-83), Grand Wagoneer(1984-86), Cherokee(1981-83), J-10, J-20(1981-86)
XJ=Wagoneer(1984-86), Cherokee(1984-86)

AR = Use as Required - = Non Illustrated Part P.A.R. = Paint as Required

« RETURN TO GROUP INDEX

COVERS, SEAT 4 DOOR, VINYL, 1986 XJ CHEROKEE
Figure 47-3200

81J 047 3200

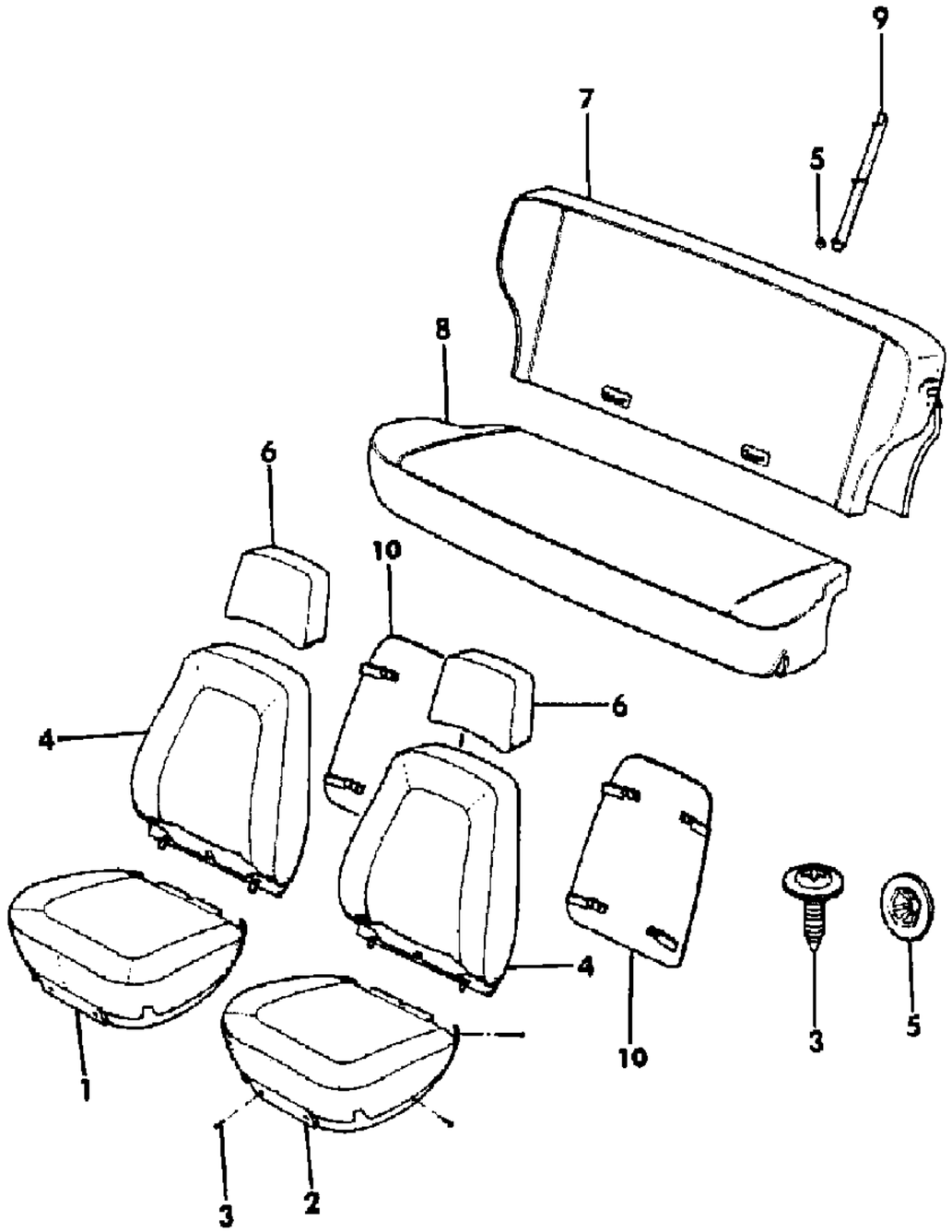

ITEM	PART NUMBER	QTY	BODY	MODEL	DESCRIPTION
1					COVER, Cushion
					Vinyl
	5500 8936	1			Black, 1PX
	5500 8940	1			Honey, 9PX
	5501 2140	1			Tan, 6PX
					Tooled Vinyl
	5501 2714	1			Black, 1QT
	5501 2710	1			Med. Blue, 3QT
	5501 2718	1			Garnet, 4QT
	5501 2722	1			Honey, 9QT
	5501 2148	1			Tan, 6QT
					Deluxe Vinyl
	5500 8944	1			Black, 1QV
	5500 8942	1			Med. Blue, 3QV
	5500 3920	1			Garnet, 4QV
	5500 6880	1			Honey, 9QV
2					COVER, Cushion
					Vinyl
	5500 8937	1			Black, 1PX
	5500 8941	1			Honey, 9PX
	5501 2141	1			Tan, 6PX
					Tooled Vinyl
	5501 2715	1			Black, 1QT
	5501 2711	1			Med. Blue, 3QT
	5501 2719	1			Garnet, 4QT
	5501 2723	1			Honey, 9QT
	5501 2149	1			Tan, 6QT
					Deluxe Vinyl
	5500 8945	1			Black, 1QV
	5500 8943	1			Med. Blue, 3QV
	5500 3921	1			Garnet, 4QV
	5500 6881	1			Honey, 9QV
3	3420 1314	12			SCREW
4					COVER, Back
					Vinyl
	5501 3444	2			Black, 1PX
	5501 3445	2			Honey, 9PX
	3501 2602	2			Tan, 6PX
					Tooled Vinyl

MODEL CODES

16=Cherokee 2 Dr.(1981-83)	78=Cherokee 4WD-4 Dr.(1984-86)	64=Comanche 2WD-6 Ft. Box(1986)	25=J-10 Truck 7 Ft. Box(1981-84)
17=Cherokee 2 Dr.(1981-83)	85=CJ-5 (1981-83)	66=Comanche 2WD-7 Ft. Box(1986)	26=J10 Truck 8 Ft. Box(1981-86)
73=Cherokee 2WD-2 Dr.(1984-86)	86=CJ-6(1981)	63=Comanche 4WD-6 Ft. Box(1986)	27=J-20 Truck 8 Ft. Box(1981-86)
74=Cherokee 2WD-4 Dr.(1984-86)	87=CJ-7(1981-86)	65=Comanche 4WD-7 Ft. Box(1986)	15=Wagoneer 4 Dr.(1981-83)
18=Cherokee 4 Dr.(1981-83)	88=CJ-8, Scrambler(1981-86)	15=Grand Wagoneer 4 Dr.(1984-86)	75=Wagoneer 4WD-4 Dr.(1984-86)
77=Cherokee 4WD-2 Dr.(1984-86)			

BODY
CJ=CJ-5, CJ-6, CJ-7, CJ-8, Scrambler(1981-86)
MJ=Comanche Pickup(1986)

STYLES
SJ=Wagoneer(1981-83), Grand Wagoneer(1984-86), Cherokee(1981-83), J-10, J-20(1981-86)
XJ=Wagoneer(1984-86), Cherokee(1984-86)

AR = Use as Required - = Non Illustrated Part P.A.R. = Paint as Required

COVERS, SEAT 4 DOOR, VINYL, 1986 XJ CHEROKEE
Figure 47-3200

81J 047 3200

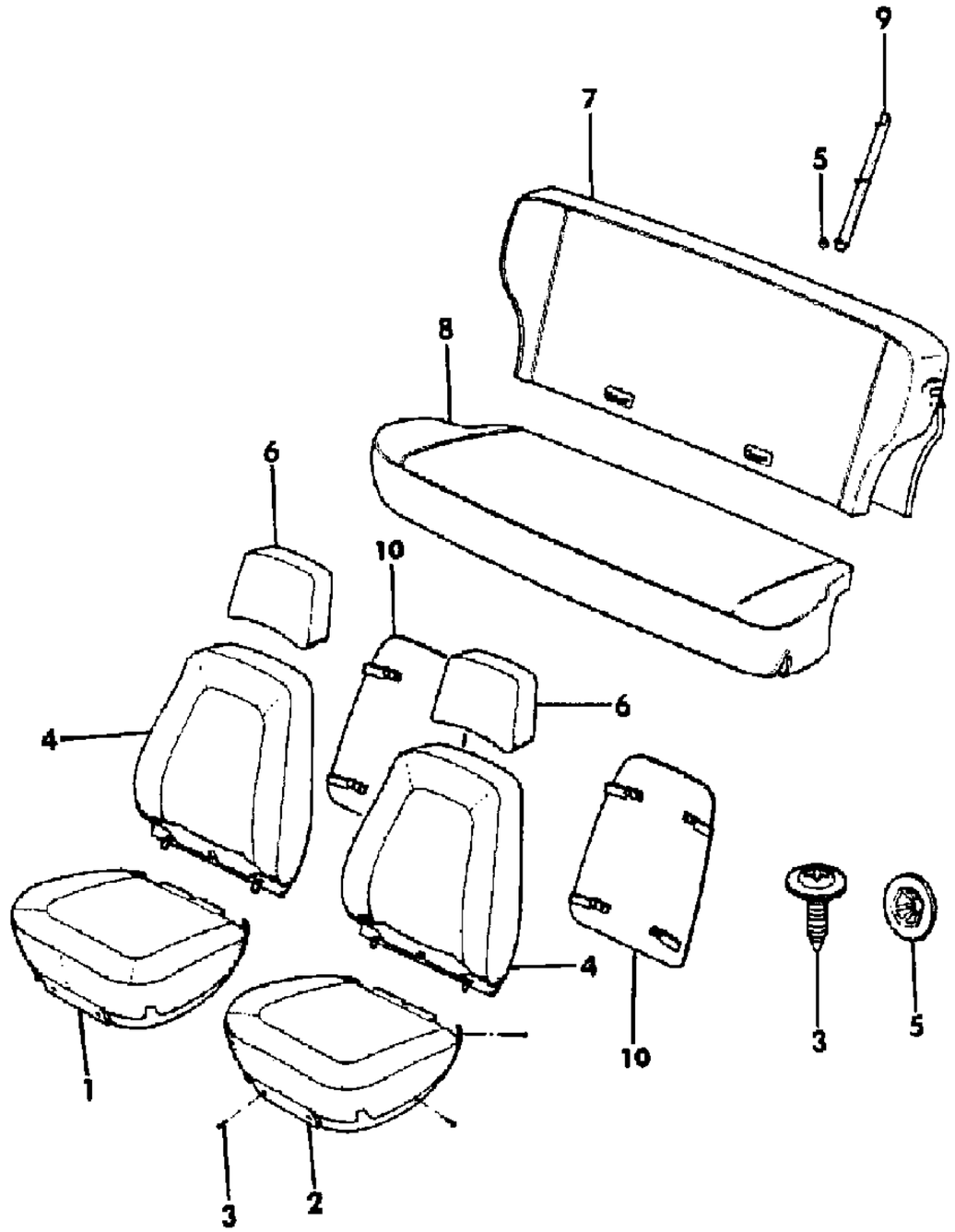

ITEM	PART NUMBER	QTY	BODY	MODEL	DESCRIPTION
	5501 2727	2			Black, 1QT
	5501 2729	2			Med. Blue, 3QT
	5501 2729	2			Garnet, 4QT
	5501 2731	2			Honey, 9QT
	5501 2176	2			Tan, 6QT
					Deluxe Vinyl
	5500 8972	2			Black, 1QV
	5500 8968	2			Med. Blue, 3QV
	5500 3968	2			Garnet, 4QV
	5500 6912	2			Honey, 9QV
5	3420 2014	12			Nut, Push ***
6					COVER, Headrest
	5500 9103	2			Black
	3500 7250	2			Med. Blue
	3500 1288	2			Garnet
	3500 6106	2			Honey
	3501 3109	2			Tan
7					COVER, Back
					Vinyl
	5500 9026	1			Black, 1PX
	5500 9027	1			Honey, 9PX
	5501 2256	1			Tan, 6PX
					Tooled Vinyl
	5501 2741	1			Black, 1QT
	5501 2740	1			Med. Blue, 2QT
	5501 2742	1			Garnet, 4QT
	5501 2743	1			Honey, 9QT
	5501 2260	1			Tan, 6QT
					Deluxe Vinyl
	5500 9029	1			Black, 1QV
	5500 9028	1			Med. Blue, 3QV
	5500 4014	1			Garnet, 4QV
	5500 6941	1			Honey, 9QV
8					COVER, Cushion
					Vinyl
	5500 9016	1			Black, 1PX
	5500 9017	1			Honey, 9PX
	5501 2242	1			Tan, 6PX
					Tooled Vinyl

MODEL CODES

16=Cherokee 2 Dr.(1981-83)
17=Cherokee 2 Dr.(1981-83)
73=Cherokee 2WD-2 Dr.(1984-86)
74=Cherokee 2WD-4 Dr.(1984-86)
18=Cherokee 4 Dr.(1981-83)
77=Cherokee 4WD-2 Dr.(1984-86)
78=Cherokee 4WD-4 Dr.(1984-86)
85=CJ-5 (1981-83)
86=CJ-6(1981)
87=CJ-7(1981-86)
88=CJ-8, Scrambler(1981-86)
64=Comanche 2WD-6 Ft. Box(1986)
66=Comanche 2WD-7 Ft. Box(1986)
63=Comanche 4WD-6 Ft. Box(1986)
65=Comanche 4WD-7 Ft. Box(1986)
15=Grand Wagoneer 4 Dr.(1984-86)
25=J-10 Truck 7 Ft. Box(1981-84)
26=J10 Truck 8 Ft. Box(1981-86)
27=J-20 Truck 8 Ft. Box(1981-86)
15=Wagoneer 4 Dr.(1981-83)
75=Wagoneer 4WD-4 Dr.(1984-86)

BODY
CJ=CJ-5, CJ-6, CJ-7, CJ-8, Scrambler(1981-86)
MJ=Comanche Pickup(1986)

STYLES
SJ=Wagoneer(1981-83), Grand Wagoneer(1984-86), Cherokee(1981-83), J-10, J-20(1981-86)
XJ=Wagoneer(1984-86), Cherokee(1984-86)

AR = Use as Required - = Non Illustrated Part P.A.R. = Paint as Required

COVERS, SEAT 4 DOOR, VINYL, 1986 XJ CHEROKEE
Figure 47-3200

81J 047 3200

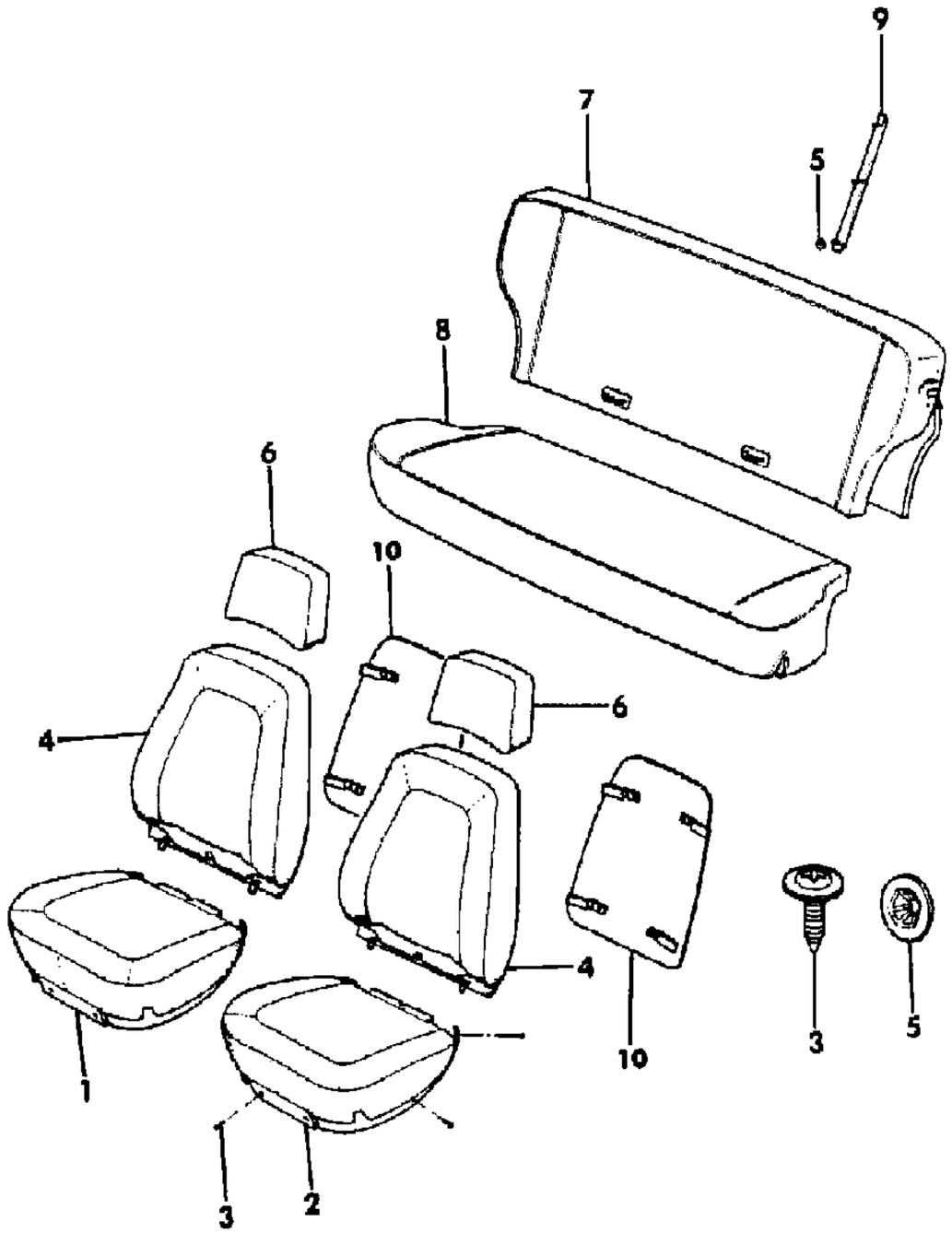

ITEM	PART NUMBER	QTY	BODY	MODEL	DESCRIPTION
	5501 2737	1			Black, 1QT
	5501 2736	1			Med. Blue, 3QT
	5501 2738	1			Garnet, 4QT
	5501 2739	1			Honey, 9QT
	5501 2246	1			Tan, 6QT
					Deluxe Vinyl
	5500 9019	1			Black, 1QV
	5500 9018	1			Med. Blue, 3QV
	5500 4002	1			Garnet, 4QV
	5500 6939	1			Honey, 9QV
9	5500 1076	6			STRIP, Skid ***
10					PANEL, Kick
	5500 8770	2			Black
	5500 8375	2			Med. Blue
	5500 8370	2			Garnet
	5500 8371	2			Honey
	5500 7065	2			Tan

MODEL CODES
16=Cherokee 2 Dr.(1981-83)
17=Cherokee 2 Dr.(1981-83)
73=Cherokee 2WD-2 Dr.(1984-86)
74=Cherokee 2WD-4 Dr.(1984-86)
18=Cherokee 4 Dr.(1981-83)
77=Cherokee 4WD-2 Dr.(1984-86)
78=Cherokee 4WD-4 Dr.(1984-86)
85=CJ-5 (1981-83)
86=CJ-6(1981)
87=CJ-7(1981-86)
88=CJ-8, Scrambler(1981-86)
64=Comanche 2WD-6 Ft. Box(1986)
66=Comanche 2WD-7 Ft. Box(1986)
63=Comanche 4WD-6 Ft. Box(1986)
65=Comanche 4WD-7 Ft. Box(1986)
15=Grand Wagoneer 4 Dr.(1984-86)
25=J-10 Truck 7 Ft. Box(1981-84)
26=J10 Truck 8 Ft. Box(1981-86)
27=J-20 Truck 8 Ft. Box(1981-86)
15=Wagoneer 4 Dr.(1981-83)
75=Wagoneer 4WD-4 Dr.(1984-86)

BODY
CJ=CJ-5, CJ-6, CJ-7, CJ-8, Scrambler(1981-86)
MJ=Comanche Pickup(1986)

STYLES
SJ=Wagoneer(1981-83), Grand Wagoneer(1984-86), Cherokee(1981-83), J-10, J-20(1981-86)
XJ=Wagoneer(1984-86), Cherokee(1984-86)

AR = Use as Required - = Non Illustrated Part P.A.R. = Paint as Required

« RETURN TO GROUP INDEX

COVERS, FRONT SEAT 4 DOOR, 1984-85 XJ WAGONEER
Figure 47-3300

81J 047 3300

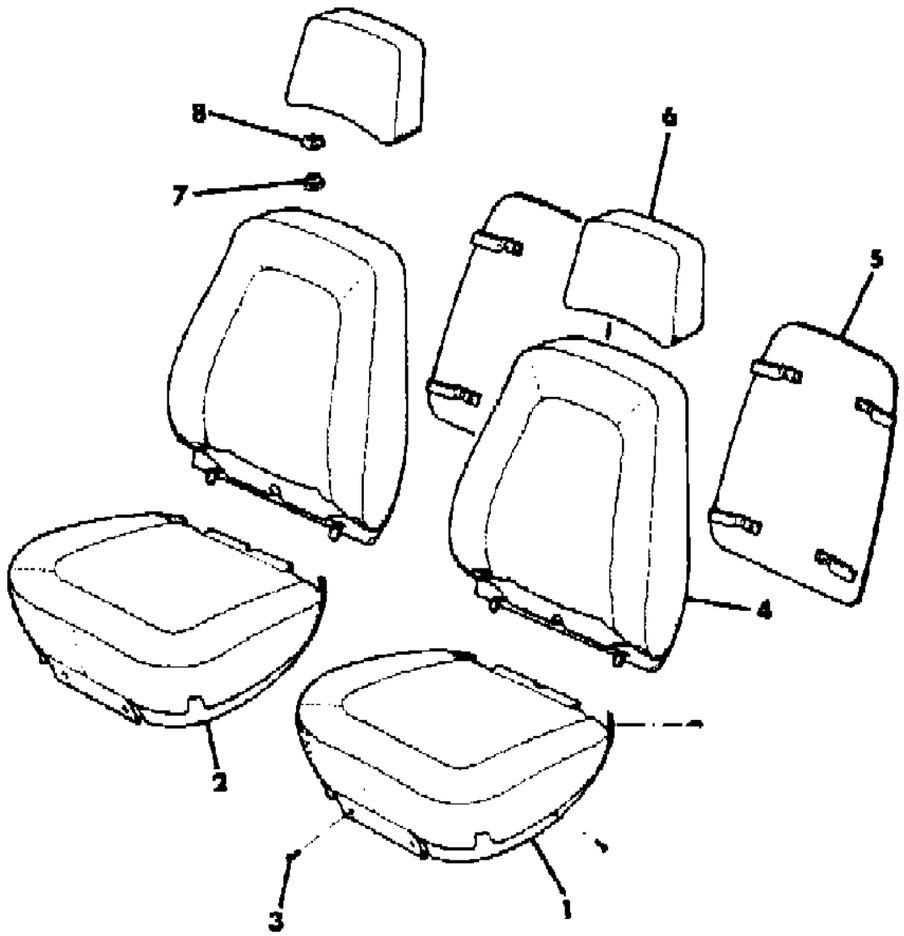

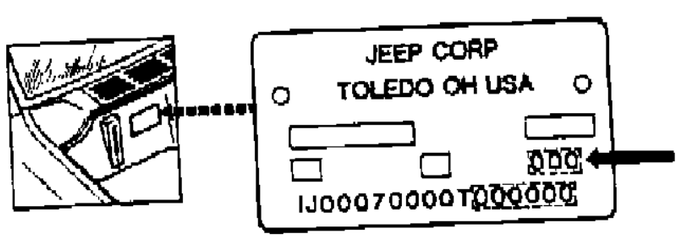

ITEM	PART NUMBER	QTY	BODY	MODEL	DESCRIPTION
1					COVER, Cushion
					Trim Code:
	5500 4819	1			3QG
	5500 7873	1			3QGP
	5500 4823	1			4QG
	5500 4827	1			4QL
	5500 4825	1			5QG, (Up To Veh. No. 59647)
	5500 7493	1			5QG, (After Veh. No. 59647)
	5500 4829	1			5QL
	5500 4821	1			6QG, (Up To Veh. No. 59647)
	5500 7489	1			6QG, (After Veh. No. 59647)
	5500 6887	1			9QG
	5500 6889	1			9QL
2					COVER, Cushion
					Trim Code:
	5500 4818	1			3QG
	5500 7872	1			3QGP
	5500 4822	1			4QG
	5500 4826	1			4QL
	5500 4824	1			5QG, (Up To Veh. No. 59647)
	5500 7492	1			5QG, (After Veh. No. 59647)
	5500 4828	1			5QL
	5500 4820	1			6QG, (Up To Veh. No. 59647)
	5500 7488	1			6QG, (After Veh. No. 59647)
	5500 6886	1			9QG
	5500 6888	1			9QL
3	3420 1314	12			SCREW
4					Cover, Back ***
					Trim Code:
	5500 4830	2			3QG
	5500 7900	2			3QGP
	5500 4834	2			4QG
	5500 4838	2			4QL
	5500 4836	2			5QG, (Up To Veh. No. 59647)
	5500 7500	2			5QG, (After Veh. No. 59647)
	5500 4840	2			5QL
	5500 4832	2			6QG, (Up To Veh. No. 59647)
	5500 7496	2			6QG, (After Veh. No. 59647)
	5500 6936	2			9QG

MODEL CODES

16=Cherokee 2 Dr.(1981-83)	78=Cherokee 4WD-4 Dr.(1984-86)	64=Comanche 2WD-6 Ft. Box(1986)	25=J-10 Truck 7 Ft. Box(1981-84)
17=Cherokee 2 Dr.(1981-83)	85=CJ-5 (1981-83)	66=Comanche 2WD-7 Ft. Box(1986)	26=J10 Truck 8 Ft. Box(1981-86)
73=Cherokee 2WD-2 Dr.(1984-86)	86=CJ-6(1981)	63=Comanche 4WD-6 Ft. Box(1986)	27=J-20 Truck 8 Ft. Box(1981-86)
74=Cherokee 2WD-4 Dr.(1984-86)	87=CJ-7(1981-86)	65=Comanche 4WD-7 Ft. Box(1986)	15=Wagoneer 4 Dr.(1981-83)
18=Cherokee 4 Dr.(1981-83)	88=CJ-8, Scrambler(1981-86)	15=Grand Wagoneer 4 Dr.(1984-86)	75=Wagoneer 4WD-4 Dr.(1984-86)
77=Cherokee 4WD-2 Dr.(1984-86)			

BODY
CJ=CJ-5, CJ-6, CJ-7, CJ-8, Scrambler(1981-86)
MJ=Comanche Pickup(1986)

STYLES
SJ=Wagoneer(1981-83), Grand Wagoneer(1984-86), Cherokee(1981-83), J-10, J-20(1981-86)
XJ=Wagoneer(1984-86), Cherokee(1984-86)

AR = Use as Required - = Non Illustrated Part P.A.R. = Paint as Required

COVERS, FRONT SEAT 4 DOOR, 1984-85 XJ WAGONEER
Figure 47-3300

81J 047 3300

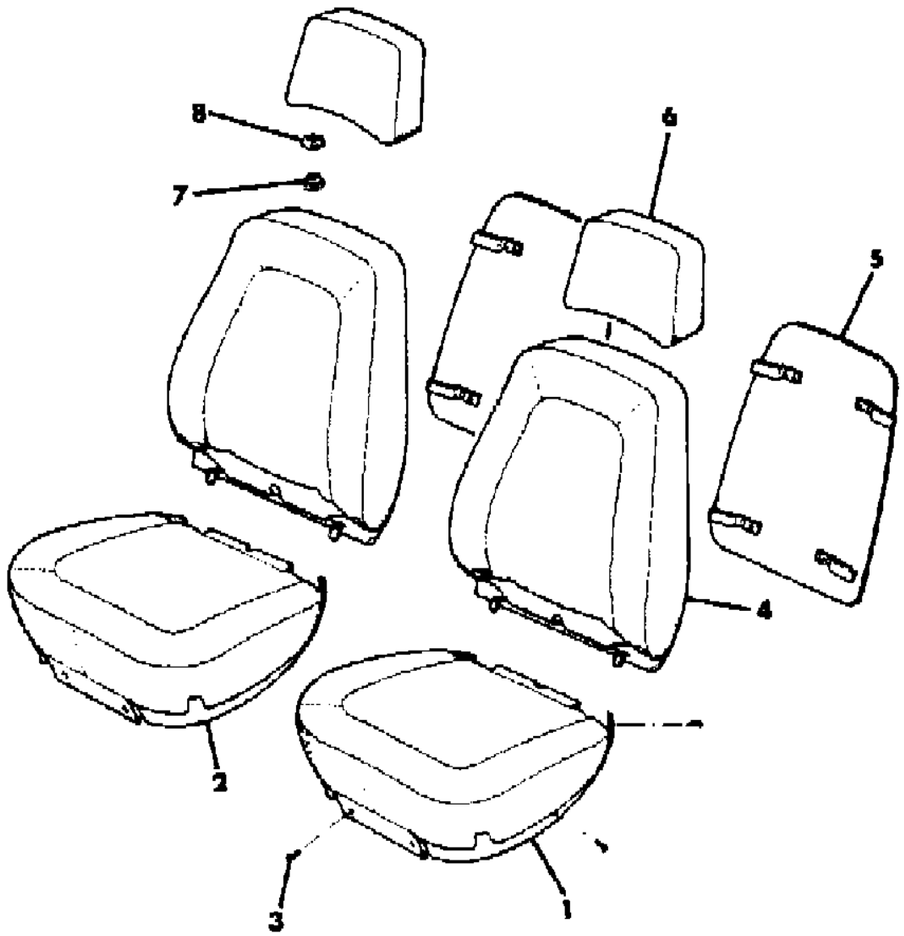

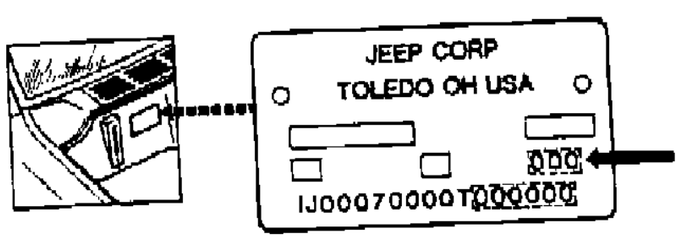

ITEM	PART NUMBER	QTY	BODY	MODEL	DESCRIPTION
	5500 6938	2			9QL
5					PANEL, Seat Back
					Trim Code:
	5500 4577	2			3QG
	5500 8375	2			3QGP
	5500 4579	2			4QG
	5500 4581	2			4QL
	5500 4580	2			5QG
	5500 4582	2			5QL
	5500 4578	2			6QG
	5500 6120	2			9QG
	5500 6121	2			9QL
6					COVER, Headrest
	5500 6953	2			Almond Cloth, (Up To Veh. No. 59647)
	5500 7482	2			Almond Cloth, (After Veh. No. 59647)
	5500 9099	2			Med. Blue Cloth
	5500 6952	2			Slate Blue Cloth
	5500 6954	2			Garnet Cloth
	5500 5260	2			Garnet Leather
	5500 6955	2			Honey Cloth
	5500 6124	2			Honey Leather
	5500 7139	2			Nutmeg Cloth, (Up To Veh. No. 59647)
	5500 7484	2			Nutmeg Cloth, (After Veh. No. 59647)
	5500 5261	2			Nutmeg Leather
7					EYELET, Lower ***
	3500 3381	4			Almond
	3500 8661	4			Slate Blue
	3500 3382	4			Garnet
	3500 3383	4			Nutmeg
8					EYELET, Upper ***
	3500 3122	4			Almond
	3500 8660	4			Slate Blue
	3500 3123	4			Garnet
	3500 3124	4			Nutmeg

MODEL CODES

16=Cherokee 2 Dr.(1981-83)	78=Cherokee 4WD-4 Dr.(1984-86)	64=Comanche 2WD-6 Ft. Box(1986)	25=J-10 Truck 7 Ft. Box(1981-84)
17=Cherokee 2 Dr.(1981-83)	85=CJ-5 (1981-83)	66=Comanche 2WD-7 Ft. Box(1986)	26=J10 Truck 8 Ft. Box(1981-86)
73=Cherokee 2WD-2 Dr.(1984-86)	86=CJ-6(1981)	63=Comanche 4WD-6 Ft. Box(1986)	27=J-20 Truck 8 Ft. Box(1981-86)
74=Cherokee 2WD-4 Dr.(1984-86)	87=CJ-7(1981-86)	65=Comanche 4WD-7 Ft. Box(1986)	15=Wagoneer 4 Dr.(1981-83)
18=Cherokee 4 Dr.(1981-83)	88=CJ-8, Scrambler(1981-86)	15=Grand Wagoneer 4 Dr.(1984-86)	75=Wagoneer 4WD-4 Dr.(1984-86)
77=Cherokee 4WD-2 Dr.(1984-86)			

BODY
CJ=CJ-5, CJ-6, CJ-7, CJ-8, Scrambler(1981-86)
MJ=Comanche Pickup(1986)

STYLES
SJ=Wagoneer(1981-83), Grand Wagoneer(1984-86), Cherokee(1981-83), J-10, J-20(1981-86)
XJ=Wagoneer(1984-86), Cherokee(1984-86)

AR = Use as Required - = Non Illustrated Part P.A.R. = Paint as Required

COVERS, SEAT 4 DOOR, 1986 XJ CHEROKEE
Figure 47-3400

81J 047 3400

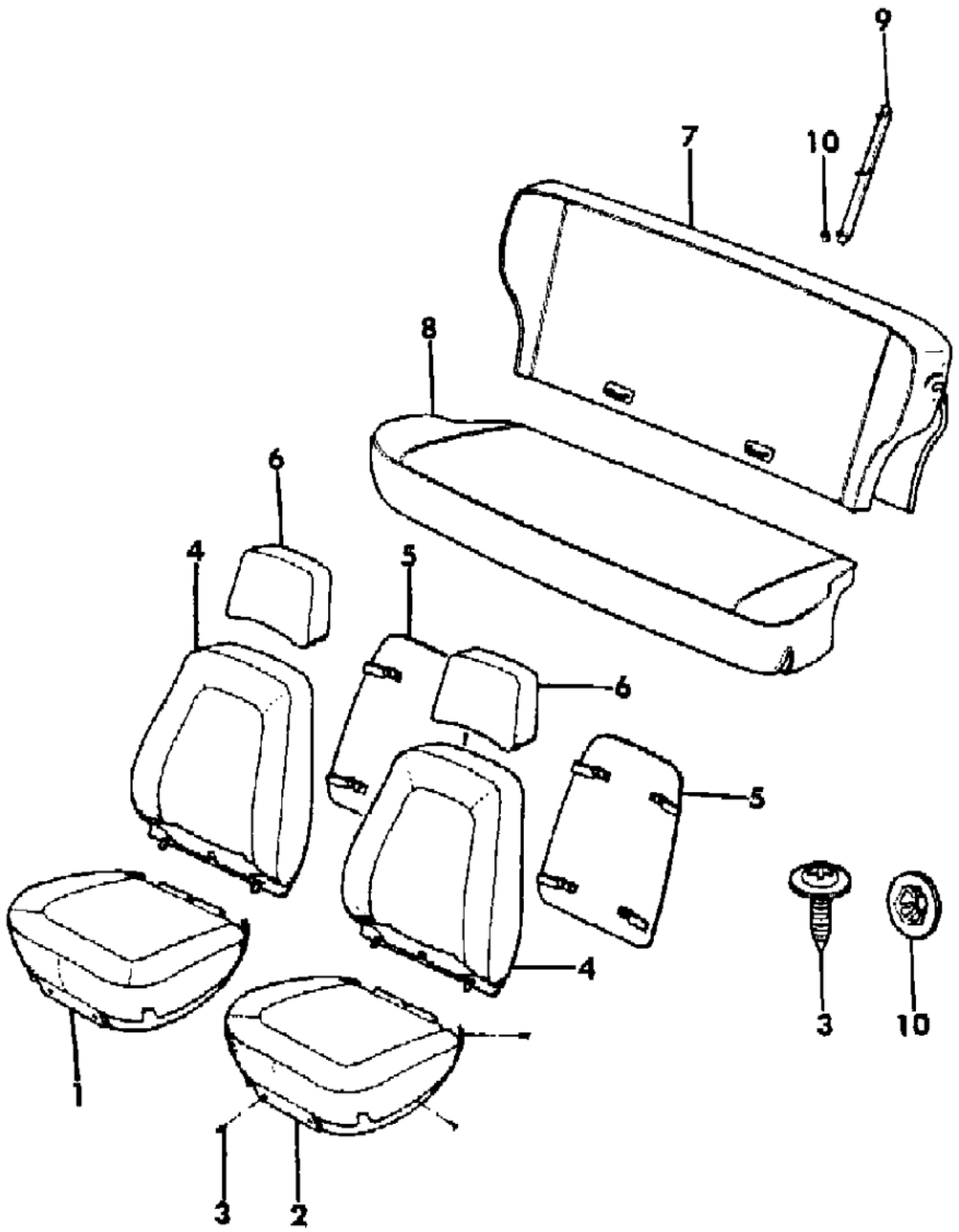

ITEM	PART NUMBER	QTY	BODY	MODEL	DESCRIPTION
1					COVER, Cushion
					Cloth, Base Model
	5501 4448	1			Black, 1QG
	5500 7872	1			Med. Blue, 3QG
	5500 7874	1			Garnet, 4QG
	5500 7876	1			Honey, 9QG
	5501 2196	1			Tan, 6QG
					Leather, Limited Model
	5500 4826	1			Garnet, 4QL
	5500 6888	1			Honey, 9QL
	5501 2200	1			Tan, 6QL
2					COVER, Cushion
					Cloth, Base Model
	5501 4449	1			Black, 1QG
	5500 7873	1			Med. Blue, 3QG
	5500 7875	1			Garnet, 4QG
	5500 7877	1			Honey, 9QG
	5501 2197	1			Tan, 6QG
					Leather, Limited Model
	5500 4827	1			Garnet, 4QL
	5500 6889	1			Honey, 9QL
	5501 2201	1			Tan, 6QL
3	3420 1314	12			SCREW
4					COVER, Back
					Cloth, Base Model
	5501 4450	2			Black, 1QG
	5500 7900	2			Med. Blue, 3QG
	5500 7902	2			Garnet, 4QG
	5500 7904	2			Honey, 9QG
	5501 2204	2			Tan, 6QG
					Leather, Limited Model
	5500 4838	2			Garnet, 4QL
	5500 6938	2			Honey, 9QL
	5501 2208	2			Tan, 6QL
5					PANEL, Seat Back
					Base Model
	5500 8770	2			Black
	5500 8375	2			Med. Blue
	5500 8370	2			Garnet

MODEL CODES

16=Cherokee 2 Dr.(1981-83)
17=Cherokee 2 Dr.(1981-83)
73=Cherokee 2WD-2 Dr.(1984-86)
74=Cherokee 2WD-4 Dr.(1984-86)
18=Cherokee 4 Dr.(1981-83)
77=Cherokee 4WD-2 Dr.(1984-86)
78=Cherokee 4WD-4 Dr.(1984-86)
85=CJ-5 (1981-83)
86=CJ-6(1981)
87=CJ-7(1981-86)
88=CJ-8, Scrambler(1981-86)
64=Comanche 2WD-6 Ft. Box(1986)
66=Comanche 2WD-7 Ft. Box(1986)
63=Comanche 4WD-6 Ft. Box(1986)
65=Comanche 4WD-7 Ft. Box(1986)
15=Grand Wagoneer 4 Dr.(1984-86)
25=J-10 Truck 7 Ft. Box(1981-84)
26=J10 Truck 8 Ft. Box(1981-86)
27=J-20 Truck 8 Ft. Box(1981-86)
15=Wagoneer 4 Dr.(1981-83)
75=Wagoneer 4WD-4 Dr.(1984-86)

BODY
CJ=CJ-5, CJ-6, CJ-7, CJ-8, Scrambler(1981-86)
MJ=Comanche Pickup(1986)

STYLES
SJ=Wagoneer(1981-83), Grand Wagoneer(1984-86), Cherokee(1981-83), J-10, J-20(1981-86)
XJ=Wagoneer(1984-86), Cherokee(1984-86)

AR = Use as Required - = Non Illustrated Part P.A.R. = Paint as Required

« RETURN TO GROUP INDEX »

COVERS, SEAT 4 DOOR, 1986 XJ CHEROKEE
Figure 47-3400

81J 047 3400

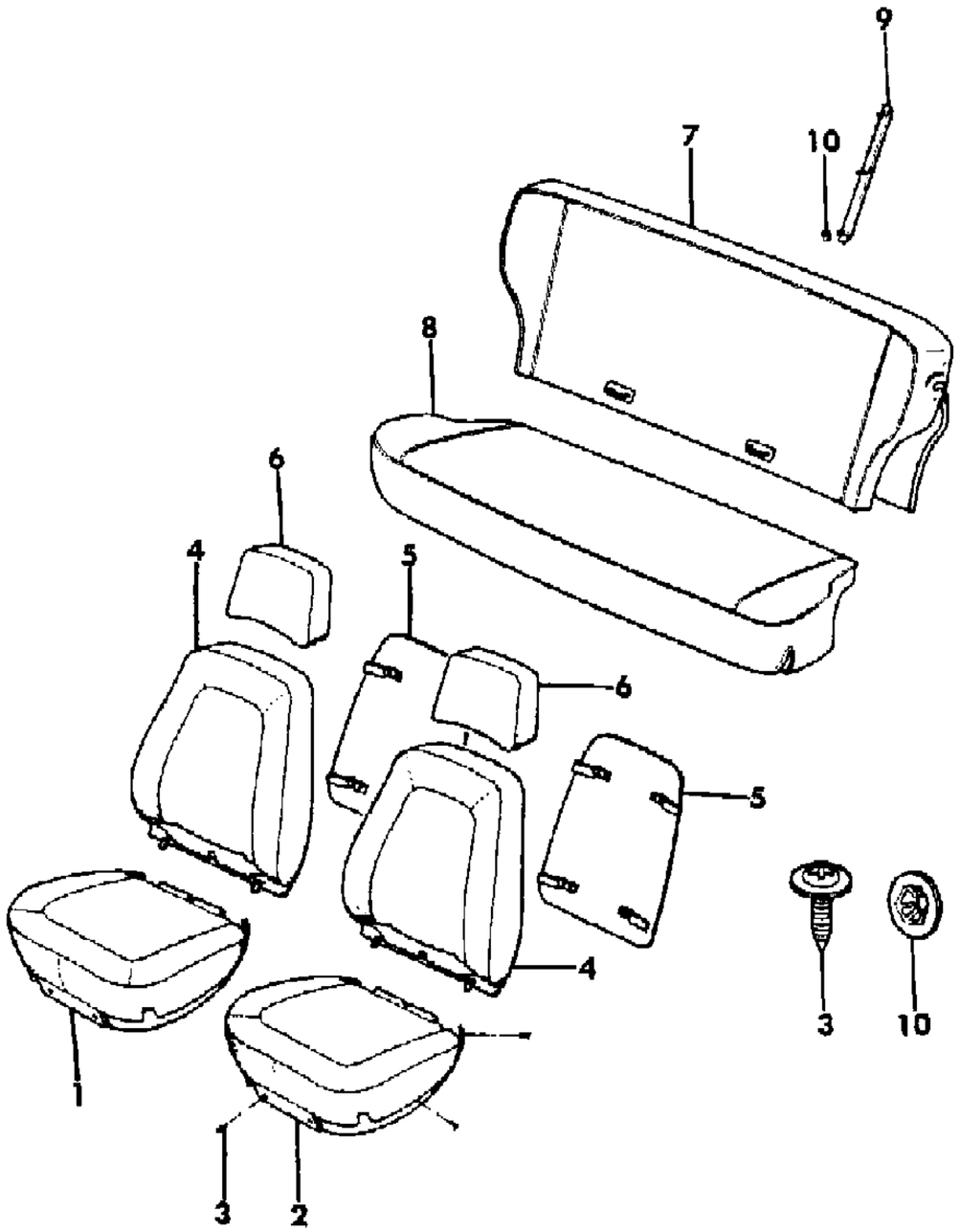

ITEM	PART NUMBER	QTY	BODY	MODEL	DESCRIPTION
	5500 8371	2			Honey
	5500 7065	2			Tan
					Limited Model
	5500 8372	2			Garnet
	5500 8373	2			Honey
	5501 2074	2			Tan
6					COVER, Headrest
					Base Model
	5500 9103	2			Black
	5500 9099	2			Med. Blue
	5500 9101	2			Garnet
	5500 9102	2			Honey
	3501 3109	2			Tan
					Limited Model
	5500 5260	2			Garnet
	5500 6124	2			Honey
	5501 4346	2			Tan
7					Cover, Back ***
					Cloth, Base Model
	5501 4469	1			Black, 1QG
	5500 9040	1			Med. Blue, 3QG
	5500 9042	1			Garnet, 4QG
	5500 9043	1			Honey, 9QG
	5501 2280	1			Tan, 6QG
					Leather, Limited Model
	5500 6281	1			Garnet, 4QL
	5500 6946	1			Honey, 9QL
	5501 2284	1			Tan, 6QL
8					COVER, Cushion
					Cloth, Base Model
	5501 4468	1			Black, 1QG
	5500 9036	1			Med. Blue, 3QG
	5500 9038	1			Garnet, 4QG
	5500 9039	1			Honey, 9QG
	5501 2272	1			Tan, 6QG
					Leather, Limited Model
	5500 4846	1			Garnet, 4QL
	5500 6944	1			Honey, 9QL
	5501 2276	1			Tan, 6QL

MODEL CODES

16=Cherokee 2 Dr.(1981-83)	78=Cherokee 4WD-4 Dr.(1984-86)	64=Comanche 2WD-6 Ft. Box(1986)	25=J-10 Truck 7 Ft. Box(1981-84)
17=Cherokee 2 Dr.(1981-83)	85=CJ-5 (1981-83)	66=Comanche 2WD-7 Ft. Box(1986)	26=J10 Truck 8 Ft. Box(1981-86)
73=Cherokee 2WD-2 Dr.(1984-86)	86=CJ-6(1981)	63=Comanche 4WD-6 Ft. Box(1986)	27=J-20 Truck 8 Ft. Box(1981-86)
74=Cherokee 2WD-4 Dr.(1984-86)	87=CJ-7(1981-86)	65=Comanche 4WD-7 Ft. Box(1986)	15=Wagoneer 4 Dr.(1981-83)
18=Cherokee 4 Dr.(1981-83)	88=CJ-8, Scrambler(1981-86)	15=Grand Wagoneer 4 Dr.(1984-86)	75=Wagoneer 4WD-4 Dr.(1984-86)
77=Cherokee 4WD-2 Dr.(1984-86)			

BODY
CJ=CJ-5, CJ-6, CJ-7, CJ-8, Scrambler(1981-86)
MJ=Comanche Pickup(1986)

STYLES
SJ=Wagoneer(1981-83), Grand Wagoneer(1984-86), Cherokee(1981-83), J-10, J-20(1981-86)
XJ=Wagoneer(1984-86), Cherokee(1984-86)

AR = Use as Required - = Non Illustrated Part P.A.R. = Paint as Required

COVERS, SEAT 4 DOOR, 1986 XJ CHEROKEE
Figure 47-3400

81J 047 3400

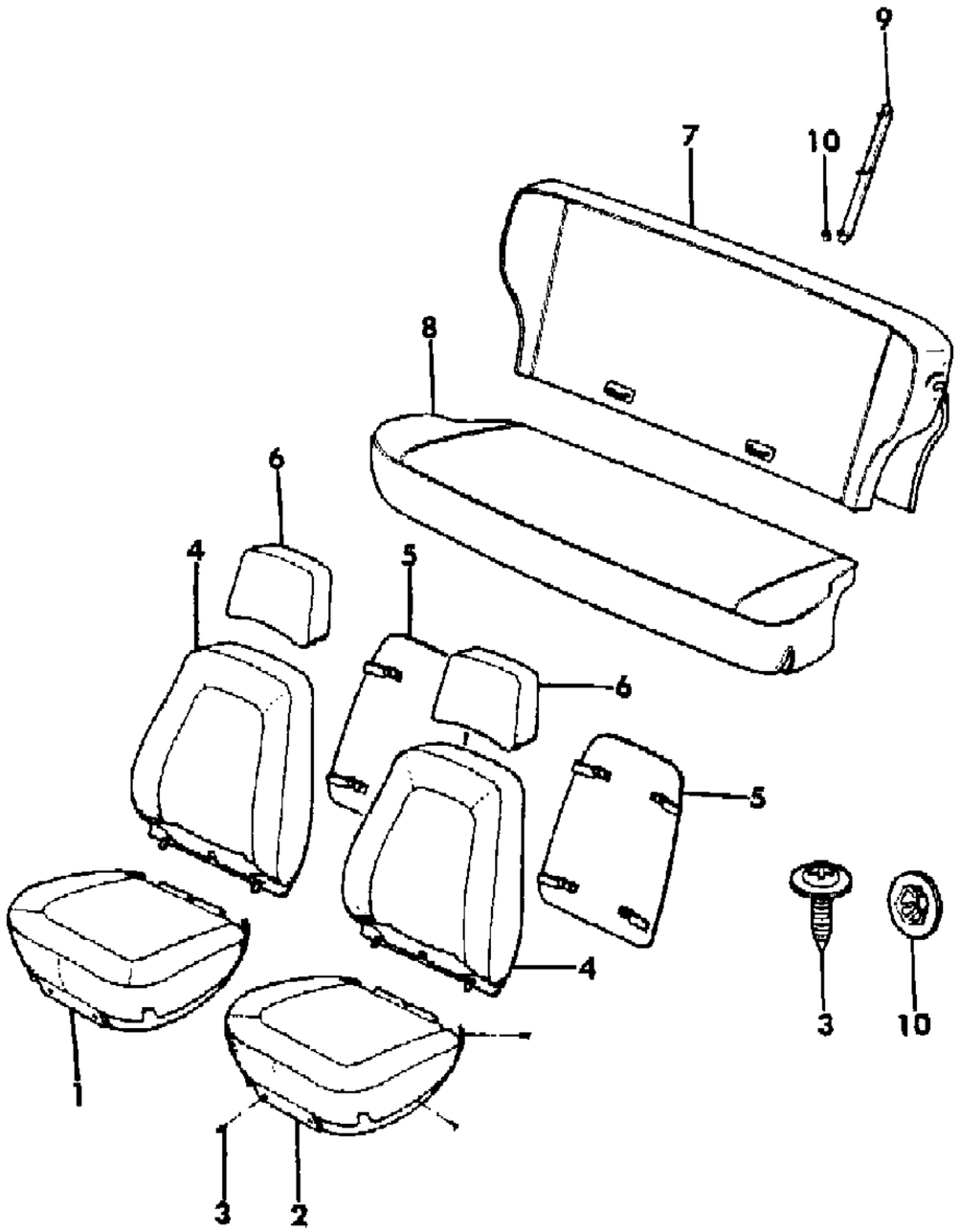

ITEM	PART NUMBER	QTY	BODY	MODEL	DESCRIPTION
9	5500 1076	6			STRIP, Skid ***
10	3420 2014	12			NUT, Push

MODEL CODES

16=Cherokee 2 Dr.(1981-83)	78=Cherokee 4WD-4 Dr.(1984-86)	64=Comanche 2WD-6 Ft. Box(1986)	25=J-10 Truck 7 Ft. Box(1981-84)
17=Cherokee 2 Dr.(1981-83)	85=CJ-5 (1981-83)	66=Comanche 2WD-7 Ft. Box(1986)	26=J10 Truck 8 Ft. Box(1981-86)
73=Cherokee 2WD-2 Dr.(1984-86)	86=CJ-6(1981)	63=Comanche 4WD-6 Ft. Box(1986)	27=J-20 Truck 8 Ft. Box(1981-86)
74=Cherokee 2WD-4 Dr.(1984-86)	87=CJ-7(1981-86)	65=Comanche 4WD-7 Ft. Box(1986)	15=Wagoneer 4 Dr.(1981-83)
18=Cherokee 4 Dr.(1981-83)	88=CJ-8, Scrambler(1981-86)	15=Grand Wagoneer 4 Dr.(1984-86)	75=Wagoneer 4WD-4 Dr.(1984-86)
77=Cherokee 4WD-2 Dr.(1984-86)			

BODY
CJ=CJ-5, CJ-6, CJ-7, CJ-8, Scrambler(1981-86)
MJ=Comanche Pickup(1986)

STYLES
SJ=Wagoneer(1981-83), Grand Wagoneer(1984-86), Cherokee(1981-83), J-10, J-20(1981-86)
XJ=Wagoneer(1984-86), Cherokee(1984-86)

AR = Use as Required - = Non Illustrated Part P.A.R. = Paint as Required

« RETURN TO GROUP INDEX

COVERS, SEAT BENCH SEAT COMANCHE
Figure 47-3500

81J 047 3500

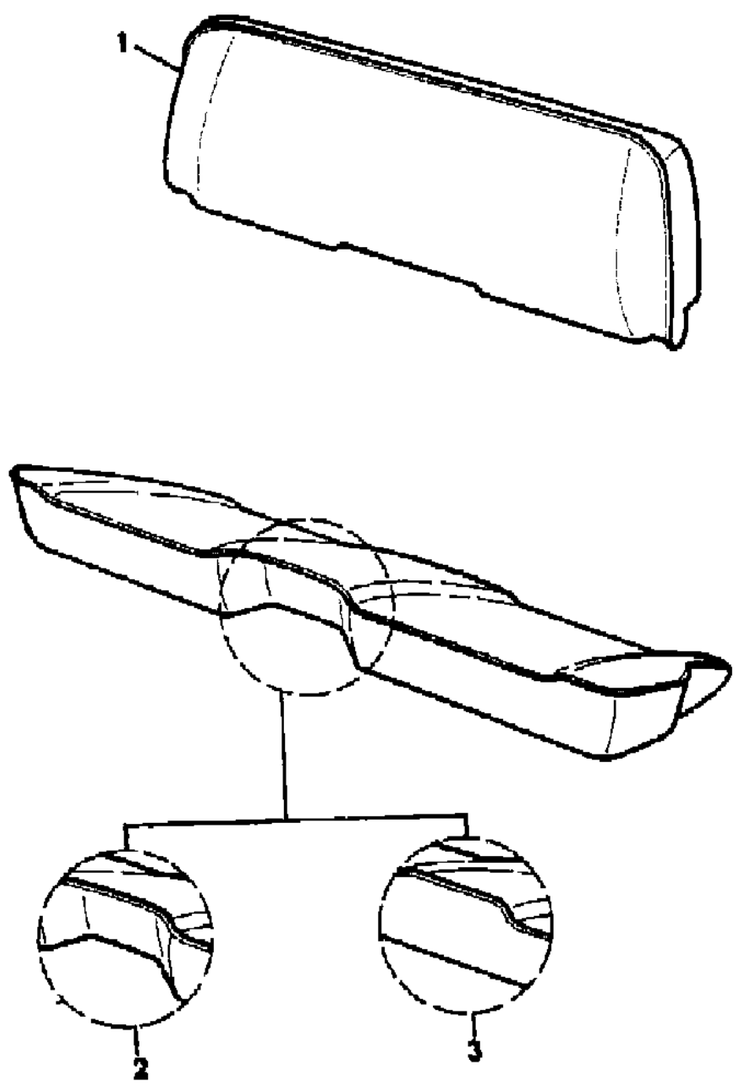

ITEM	PART NUMBER	QTY	BODY	MODEL	DESCRIPTION
1					COVER, Back
					Trim Code:
	5501 2838	1			1AT, 1YT
	5500 7934	1			1AU, 1YU
	5500 7930	1			1AV, 1YV
	5500 7926	1			1AX, 1YX
	5500 7939	1			3AG, 3YG
	5501 2839	1			3AT, 3YT
	5500 7935	1			3AU, 3YU
	5500 7931	1			3AV, 3YV
	5500 7927	1			3AX, 3YX
	5500 7940	1			4AG, 4YG
	5501 2840	1			4AT, 4YT
	5500 7936	1			4AU, 4YU
	5500 7932	1			4AV, 4YV
	5500 7928	1			4AX, 4YX
	5501 2012	1			6AT, 6YT
	5501 2016	1			6AU, 6YU
	5501 2008	1			6AX, 6YX
	5500 7941	1			9AG, 9YG
	5501 2841	1			9AT, 9YT
	5500 7937	1			9AU, 9YU
	5500 7933	1			9AV, 9YV
	5500 7929	1			9AX, 9YX
2					COVER, Cushion
					Trim Code:
	5501 2830	1			1YT
	5500 7918	1			1YU
	5500 7914	1			1YV
	5500 7910	1			1YX
	5500 7923	1			3YG
	5501 2831	1			3YT
	5500 7919	1			3YU
	5500 7915	1			3YV
	5500 7911	1			3YX
	5500 7924	1			3YG
	5501 2832	1			4YT
	5500 7920	1			4YU
	5500 7916	1			4YV

MODEL CODES

16=Cherokee 2 Dr.(1981-83)	78=Cherokee 4WD-4 Dr.(1984-86)	64=Comanche 2WD-6 Ft. Box(1986)	25=J-10 Truck 7 Ft. Box(1981-84)
17=Cherokee 2 Dr.(1981-83)	85=CJ-5 (1981-83)	66=Comanche 2WD-7 Ft. Box(1986)	26=J10 Truck 8 Ft. Box(1981-86)
73=Cherokee 2WD-2 Dr.(1984-86)	86=CJ-6(1981)	63=Comanche 4WD-6 Ft. Box(1986)	27=J-20 Truck 8 Ft. Box(1981-86)
74=Cherokee 2WD-4 Dr.(1984-86)	87=CJ-7(1981-86)	65=Comanche 4WD-7 Ft. Box(1986)	15=Wagoneer 4 Dr.(1981-83)
18=Cherokee 4 Dr.(1981-83)	88=CJ-8, Scrambler(1981-86)	15=Grand Wagoneer 4 Dr.(1984-86)	75=Wagoneer 4WD-4 Dr.(1984-86)
77=Cherokee 4WD-2 Dr.(1984-86)			

BODY
CJ=CJ-5, CJ-6, CJ-7, CJ-8, Scrambler(1981-86)
MJ=Comanche Pickup(1986)

STYLES
SJ=Wagoneer(1981-83), Grand Wagoneer(1984-86), Cherokee(1981-83), J-10, J-20(1981-86)
XJ=Wagoneer(1984-86), Cherokee(1984-86)

AR = Use as Required - = Non Illustrated Part P.A.R. = Paint as Required

« RETURN TO GROUP INDEX »

COVERS, SEAT BENCH SEAT COMANCHE
Figure 47-3500

81J 047 3500

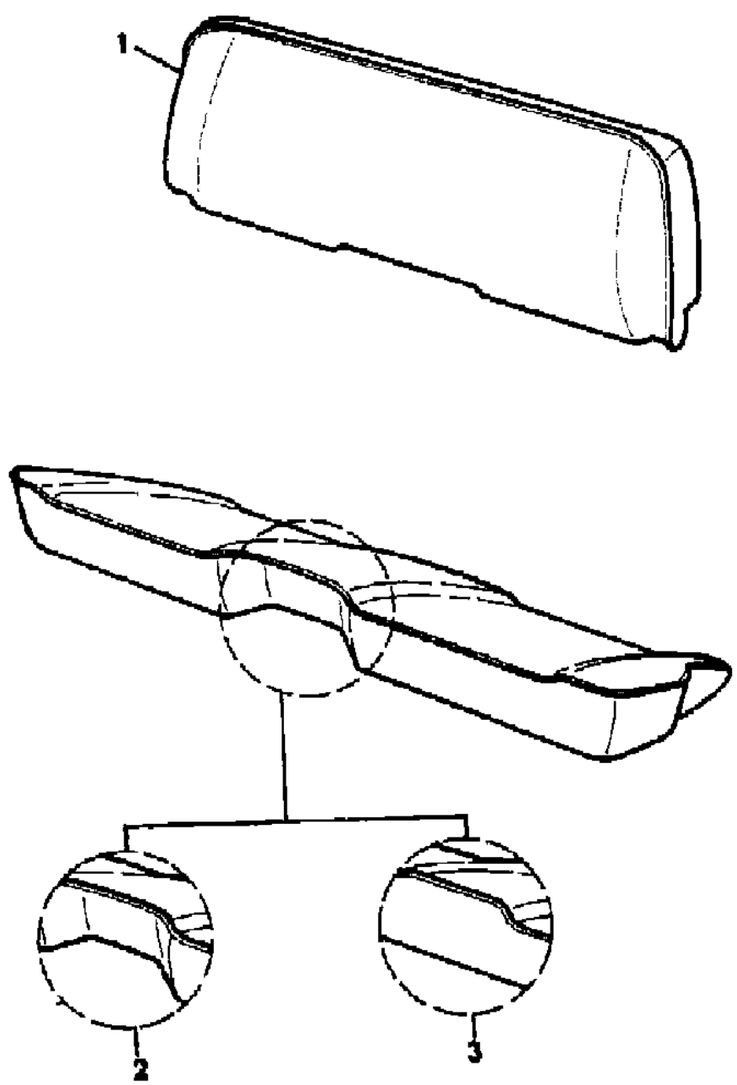

ITEM	PART NUMBER	QTY	BODY	MODEL	DESCRIPTION
	5500 7912	1			4YX
	5501 1980	1			6YT
	5501 1984	1			6YU
	5501 1976	1			6YX
	5500 7925	1			9YG
	5501 2833	1			9YT
	5500 7921	1			9YU
	5500 7917	1			9YV
	5500 7913	1			9YX
3					COVER, Cushion
					Trim Code:
	5501 2834	1			1AT
	5500 9702	1			1AU
	5500 9688	1			1AV
	5500 9694	1			1AX
	5500 9706	1			3AG
	5501 2835	1			3AT
	5500 9703	1			3AU
	5500 9699	1			3AV
	5500 9695	1			3AX
	5500 9707	1			4AG
	5501 2836	1			4AT
	5500 9704	1			4AU
	5500 9700	1			4AV
	5500 9696	1			4AX
	5501 1996	1			6AT
	5501 2000	1			6AU
	5501 1992	1			6AX
	5500 9708	1			9AG
	5501 2837	1			9AT
	5500 9705	1			9AU
	5500 9701	1			9AV
	5500 9697	1			9AX

MODEL CODES
16=Cherokee 2 Dr.(1981-83)
17=Cherokee 2 Dr.(1981-83)
73=Cherokee 2WD-2 Dr.(1984-86)
74=Cherokee 2WD-4 Dr.(1984-86)
18=Cherokee 4 Dr.(1981-83)
77=Cherokee 4WD-2 Dr.(1984-86)
78=Cherokee 4WD-4 Dr.(1984-86)
85=CJ-5 (1981-83)
86=CJ-6(1981)
87=CJ-7(1981-86)
88=CJ-8, Scrambler(1981-86)
64=Comanche 2WD-6 Ft. Box(1986)
66=Comanche 2WD-7 Ft. Box(1986)
63=Comanche 4WD-6 Ft. Box(1986)
65=Comanche 4WD-7 Ft. Box(1986)
15=Grand Wagoneer 4 Dr.(1984-86)
25=J-10 Truck 7 Ft. Box(1981-84)
26=J10 Truck 8 Ft. Box(1981-86)
27=J-20 Truck 8 Ft. Box(1981-86)
15=Wagoneer 4 Dr.(1981-83)
75=Wagoneer 4WD-4 Dr.(1984-86)

BODY
CJ=CJ-5, CJ-6, CJ-7, CJ-8, Scrambler(1981-86)
MJ=Comanche Pickup(1986)

STYLES
SJ=Wagoneer(1981-83), Grand Wagoneer(1984-86), Cherokee(1981-83), J-10, J-20(1981-86)
XJ=Wagoneer(1984-86), Cherokee(1984-86)

AR = Use as Required - = Non Illustrated Part P.A.R. = Paint as Required

« RETURN TO GROUP INDEX

COVERS, SEAT BUCKET SEATS COMANCHE
Figure 47-3600

81J 047 3600

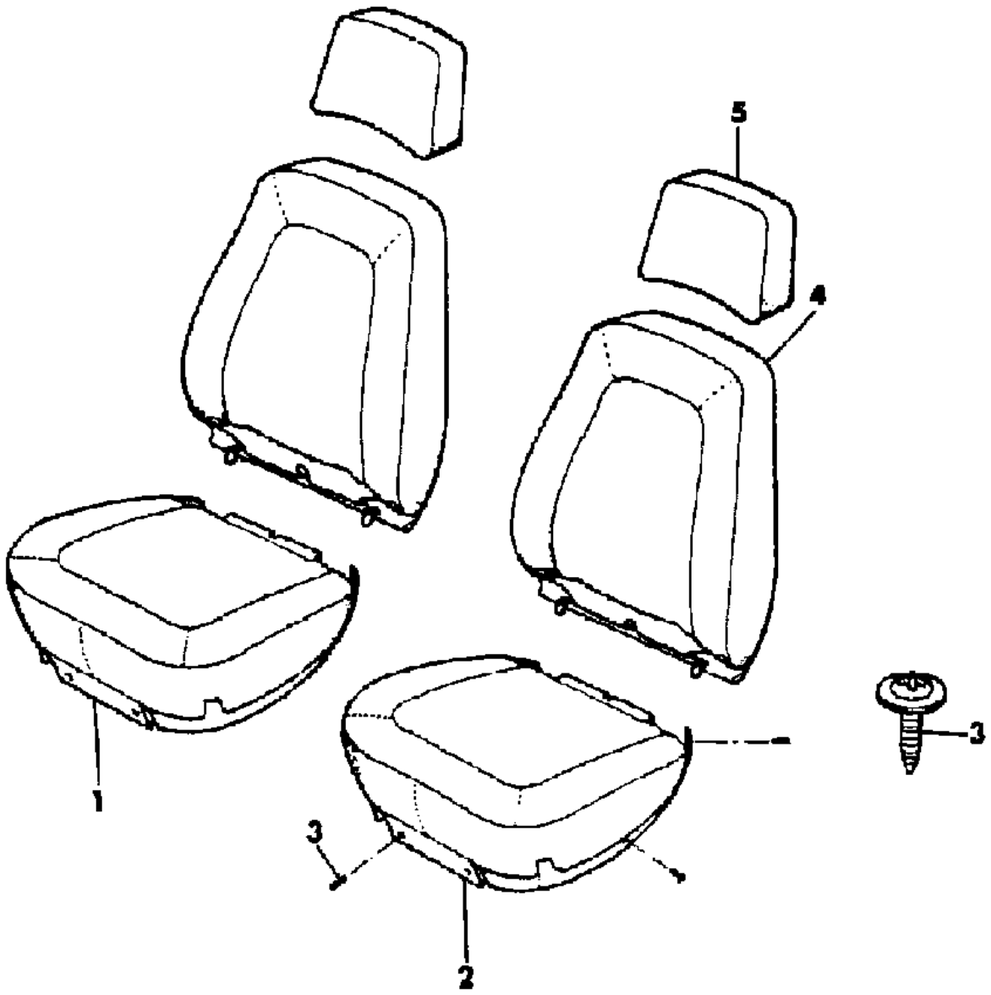

ITEM	PART NUMBER	QTY	BODY	MODEL	DESCRIPTION
1					COVER, Cushion
					Highland Check Cloth
	5500 3942	1			Garnet, 4NW
	5500 3946	1			Honey, 9NW
					Hunter Plaid Cloth
	5501 2162	1			Tan, 6NW
					Tooled Vinyl
	5501 2712	1			Black, 1NT
	5501 2708	1			Med. Blue, 3NT
	5501 2716	1			Garnet, 4NT
	5501 2720	1			Honey, 9NT
	5501 2146	1			Tan, 6NT
					Deluxe Vinyl
	5500 7862	1			Black, 1NV
	5500 7864	1			Med. Blue, 3NV
	5500 3918	1			Garnet, 4NV
	5500 6878	1			Honey, 9NV
2					COVER, Cushion
					Highland Check Cloth
	5500 3943	1			Garnet, 4NW
	5500 3947	1			Honey, 9NW
					Hunter Plaid Cloth
	5501 2163	1			Tan, 6NW
					Tooled Vinyl
	5501 2713	1			Black, 1NT
	5501 2709	1			Med. Blue, 3NT
	5501 2717	1			Garnet, 4NT
	5501 2721	1			Honey, 9NT
	5501 2147	1			Tan, 6NT
3	3420 1314	12			SCREW
4					COVER, Back
					Highland Check Cloth
	5500 9048-9	1			Garnet, 4NW
	5500 9046	1			Honey, 9NW
					Hunter Plaid Cloth
	5501 3452-3	1			Tan, 6NW
					Tooled Vinyl
	5501 2732	2			Black, 1NT
	5501 2733	2			Med. Blue, 3NT

MODEL CODES

16=Cherokee 2 Dr.(1981-83)
17=Cherokee 2 Dr.(1981-83)
73=Cherokee 2WD-2 Dr.(1984-86)
74=Cherokee 2WD-4 Dr.(1984-86)
18=Cherokee 4 Dr.(1981-83)
77=Cherokee 4WD-2 Dr.(1984-86)
78=Cherokee 4WD-4 Dr.(1984-86)
85=CJ-5 (1981-83)
86=CJ-6(1981)
87=CJ-7(1981-86)
88=CJ-8, Scrambler(1981-86)
64=Comanche 2WD-6 Ft. Box(1986)
66=Comanche 2WD-7 Ft. Box(1986)
63=Comanche 4WD-6 Ft. Box(1986)
65=Comanche 4WD-7 Ft. Box(1986)
15=Grand Wagoneer 4 Dr.(1984-86)
25=J-10 Truck 7 Ft. Box(1981-84)
26=J10 Truck 8 Ft. Box(1981-86)
27=J-20 Truck 8 Ft. Box(1981-86)
15=Wagoneer 4 Dr.(1981-83)
75=Wagoneer 4WD-4 Dr.(1984-86)

BODY
CJ=CJ-5, CJ-6, CJ-7, CJ-8, Scrambler(1981-86)
MJ=Comanche Pickup(1986)

STYLES
SJ=Wagoneer(1981-83), Grand Wagoneer(1984-86), Cherokee(1981-83), J-10, J-20(1981-86)
XJ=Wagoneer(1984-86), Cherokee(1984-86)

AR = Use as Required - = Non Illustrated Part P.A.R. = Paint as Required

COVERS, SEAT BUCKET SEATS COMANCHE
Figure 47-3600

81J 047 3600

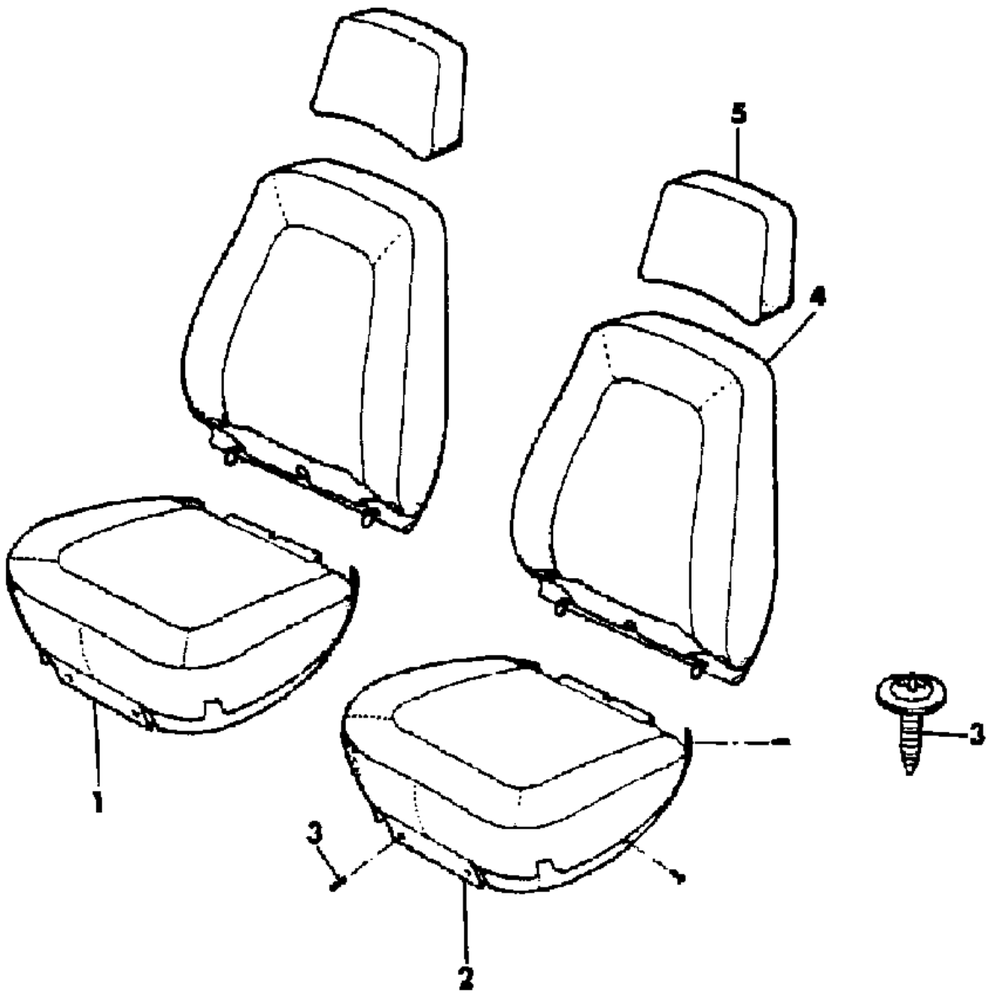

ITEM	PART NUMBER	QTY	BODY	MODEL	DESCRIPTION
	5501 2734	2			Garnet, 4NT
	5501 2735	2			Honey, 9NT
	5501 3448	2			Tan, 6NT
					Deluxe Vinyl
	5500 7890	2			Black, 1NV
	5500 7892	2			Med. Blue, 3NV
	5500 7894	2			Garnet, 4NV
	5500 7896	2			Honey, 9NV
5					COVER, Headrest
	5500 9103	2			Black
	3500 7250	2			Med. Blue
	3500 1288	2			Garnet
	3500 6106	2			Honey
	3501 3109	2			Tan

MODEL CODES
16=Cherokee 2 Dr.(1981-83)
17=Cherokee 2 Dr.(1981-83)
73=Cherokee 2WD-2 Dr.(1984-86)
74=Cherokee 2WD-4 Dr.(1984-86)
18=Cherokee 4 Dr.(1981-83)
77=Cherokee 4WD-2 Dr.(1984-86)
78=Cherokee 4WD-4 Dr.(1984-86)
85=CJ-5 (1981-83)
86=CJ-6(1981)
87=CJ-7(1981-86)
88=CJ-8, Scrambler(1981-86)
64=Comanche 2WD-6 Ft. Box(1986)
66=Comanche 2WD-7 Ft. Box(1986)
63=Comanche 4WD-6 Ft. Box(1986)
65=Comanche 4WD-7 Ft. Box(1986)
15=Grand Wagoneer 4 Dr.(1984-86)
25=J-10 Truck 7 Ft. Box(1981-84)
26=J10 Truck 8 Ft. Box(1981-86)
27=J-20 Truck 8 Ft. Box(1981-86)
15=Wagoneer 4 Dr.(1981-83)
75=Wagoneer 4WD-4 Dr.(1984-86)

BODY
CJ=CJ-5, CJ-6, CJ-7, CJ-8, Scrambler(1981-86)
MJ=Comanche Pickup(1986)

STYLES
SJ=Wagoneer(1981-83), Grand Wagoneer(1984-86), Cherokee(1981-83), J-10, J-20(1981-86)
XJ=Wagoneer(1984-86), Cherokee(1984-86)

AR = Use as Required - = Non Illustrated Part P.A.R. = Paint as Required

« RETURN TO GROUP INDEX

COVERS, REAR SEAT 1984-85 XJ CHEROKEE, XJ WAGONEER
Figure 47-3700

81J 047 3700

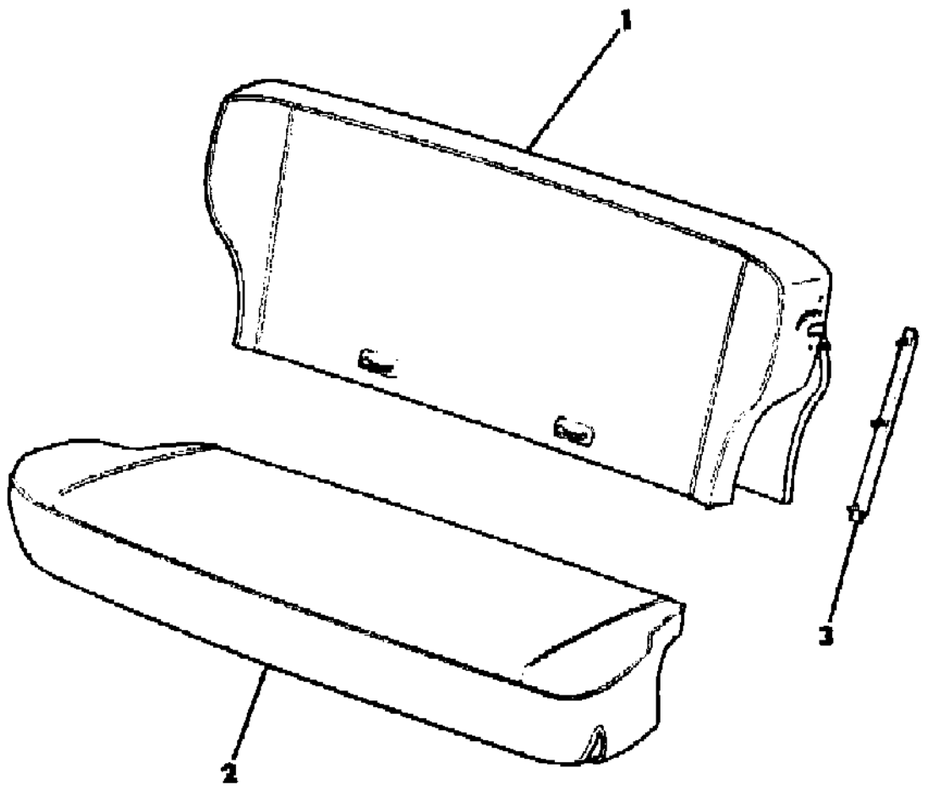

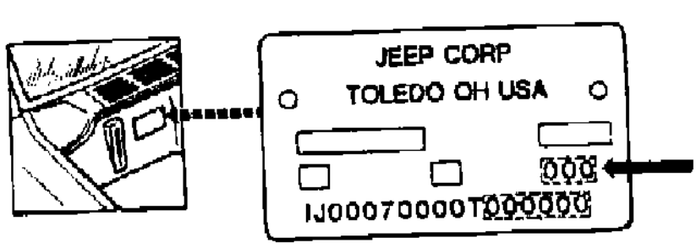

ITEM	PART NUMBER	QTY	BODY	MODEL	DESCRIPTION
1					COVER, Back
					Trim Code:
	5500 4010	1			3PX
	5500 9827	1			3QE
	5500 4848	1			3QG
	5500 9040	1			3QGP
	5500 4016	1			3QU
	5500 9032	1			3QGP
	5500 4012	1			3QV
	5500 9028	1			3QVP
	5500 4850	1			4QG
	5500 6281	1			4QL
	5500 4018	1			4QU
	5500 4014	1			4QV
	5500 7410	1			4QW
	5500 4851	1			5QG, (Up To Veh. No. 59647)
	5500 7509	1			5QG, (After Veh. No. 59647)
	5500 6282	1			5QL
	5500 4019	1			5QU
	5500 4015	1			5QV
	5500 4011	1			6PX
	5500 4849	1			6QG, (Up To Veh. No. 59647)
	5500 7507	1			6QG, (After veh. No. 59647)
	5500 4017	1			6QU
	5500 4013	1			6QV
	5500 6945	1			9QG
	5500 6946	1			9QL
	5500 6942	1			9QU
	5500 6941	1			9QV
	5500 4021	1			9QW
2					COVER, Cushion
					Trim Code:
	5500 3998	1			3PX
	5500 9826	1			3QE
	5500 4842	1			3QG
	5500 9036	1			3QGP
	5500 4004	1			3QU
	5500 9022	1			3QUP
	5500 4000	1			3QV

MODEL CODES

16=Cherokee 2 Dr.(1981-83)
17=Cherokee 2 Dr.(1981-83)
73=Cherokee 2WD-2 Dr.(1984-86)
74=Cherokee 2WD-4 Dr.(1984-86)
18=Cherokee 4 Dr.(1981-83)
77=Cherokee 4WD-2 Dr.(1984-86)
78=Cherokee 4WD-4 Dr.(1984-86)
85=CJ-5 (1981-83)
86=CJ-6(1981)
87=CJ-7(1981-86)
88=CJ-8, Scrambler(1981-86)
64=Comanche 2WD-6 Ft. Box(1986)
66=Comanche 2WD-7 Ft. Box(1986)
63=Comanche 4WD-6 Ft. Box(1986)
65=Comanche 4WD-7 Ft. Box(1986)
15=Grand Wagoneer 4 Dr.(1984-86)
25=J-10 Truck 7 Ft. Box(1981-84)
26=J10 Truck 8 Ft. Box(1981-86)
27=J-20 Truck 8 Ft. Box(1981-86)
15=Wagoneer 4 Dr.(1981-83)
75=Wagoneer 4WD-4 Dr.(1984-86)

BODY
CJ=CJ-5, CJ-6, CJ-7, CJ-8, Scrambler(1981-86)
MJ=Comanche Pickup(1986)

STYLES
SJ=Wagoneer(1981-83), Grand Wagoneer(1984-86), Cherokee(1981-83), J-10, J-20(1981-86)
XJ=Wagoneer(1984-86), Cherokee(1984-86)

AR = Use as Required - = Non Illustrated Part P.A.R. = Paint as Required

COVERS, REAR SEAT 1984-85 XJ CHEROKEE, XJ WAGONEER
Figure 47-3700

81J 047 3700

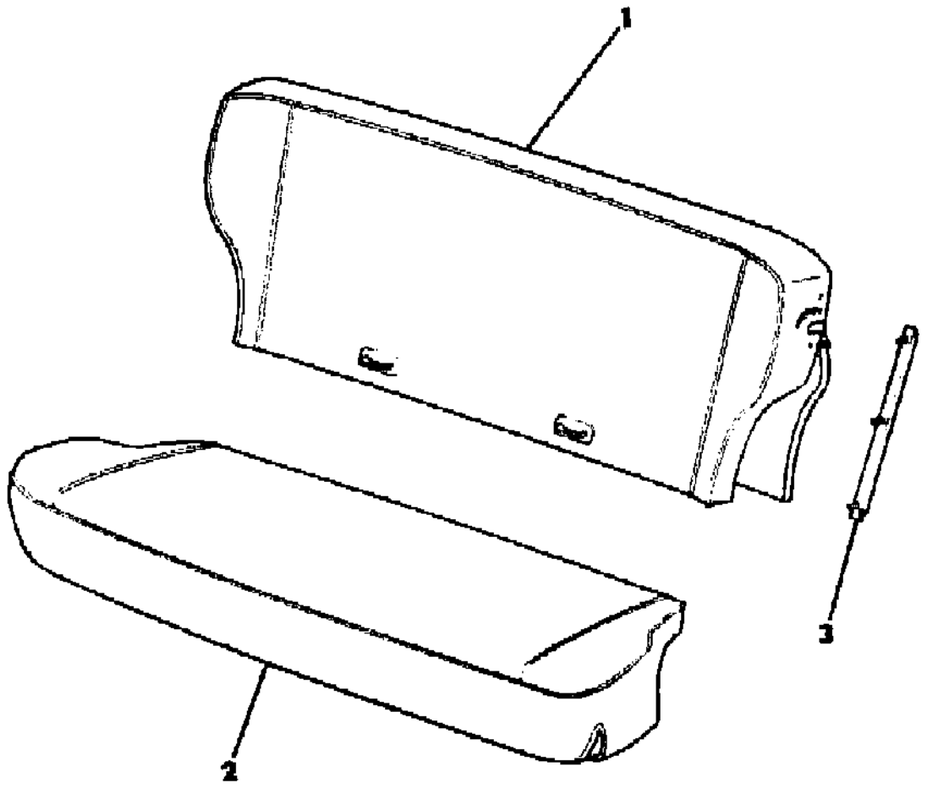

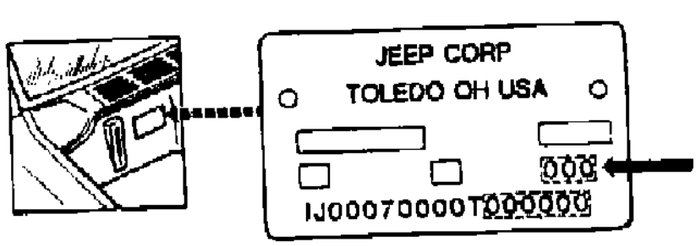

ITEM	PART NUMBER	QTY	BODY	MODEL	DESCRIPTION
	5500 9018	1			3QVP
	5500 4844	1			4QG
	5500 4846	1			4QL
	5500 4006	1			4QU
	5500 4002	1			4QV
	5500 4008	1			4QW
	5500 4845	1			5QG, (Up To Veh. No. 59647)
	5500 7505	1			5QG, (After Veh. No. 59647)
	5500 4847	1			5QL
	5500 4007	1			5QU
	5500 4003	1			5QV
	5500 3999	1			6PX
	5500 4843	1			6QG, (Up To Veh. No. 59647)
	5500 7503	1			6QG, (After Veh. No. 59647)
	5500 4005	1			6QU
	5500 4001	1			6QV
	5500 6943	1			9QG
	5500 6944	1			9QL
	5500 6940	1			9QU
	5500 6939	1			9QV
	5500 4009	1			9QW
3	5500 1076	6			STRIP, Skid ***

MODEL CODES

16=Cherokee 2 Dr.(1981-83)
17=Cherokee 2 Dr.(1981-83)
73=Cherokee 2WD-2 Dr.(1984-86)
74=Cherokee 2WD-4 Dr.(1984-86)
18=Cherokee 4 Dr.(1981-83)
77=Cherokee 4WD-2 Dr.(1984-86)
78=Cherokee 4WD-4 Dr.(1984-86)
85=CJ-5 (1981-83)
86=CJ-6(1981)
87=CJ-7(1981-86)
88=CJ-8, Scrambler(1981-86)
64=Comanche 2WD-6 Ft. Box(1986)
66=Comanche 2WD-7 Ft. Box(1986)
63=Comanche 4WD-6 Ft. Box(1986)
65=Comanche 4WD-7 Ft. Box(1986)
15=Grand Wagoneer 4 Dr.(1984-86)
25=J-10 Truck 7 Ft. Box(1981-84)
26=J10 Truck 8 Ft. Box(1981-86)
27=J-20 Truck 8 Ft. Box(1981-86)
15=Wagoneer 4 Dr.(1981-83)
75=Wagoneer 4WD-4 Dr.(1984-86)

BODY

CJ=CJ-5, CJ-6, CJ-7, CJ-8, Scrambler(1981-86)
MJ=Comanche Pickup(1986)

STYLES

SJ=Wagoneer(1981-83), Grand Wagoneer(1984-86), Cherokee(1981-83), J-10, J-20(1981-86)
XJ=Wagoneer(1984-86), Cherokee(1984-86)

AR = Use as Required - = Non Illustrated Part P.A.R. = Paint as Required

« RETURN TO GROUP INDEX

SEAT TRACK, W/O POWER SEATS BUCKET SEATS XJ CHEROKEE, XJ WAGONEER
Figure 47-3800

81J 047 3800

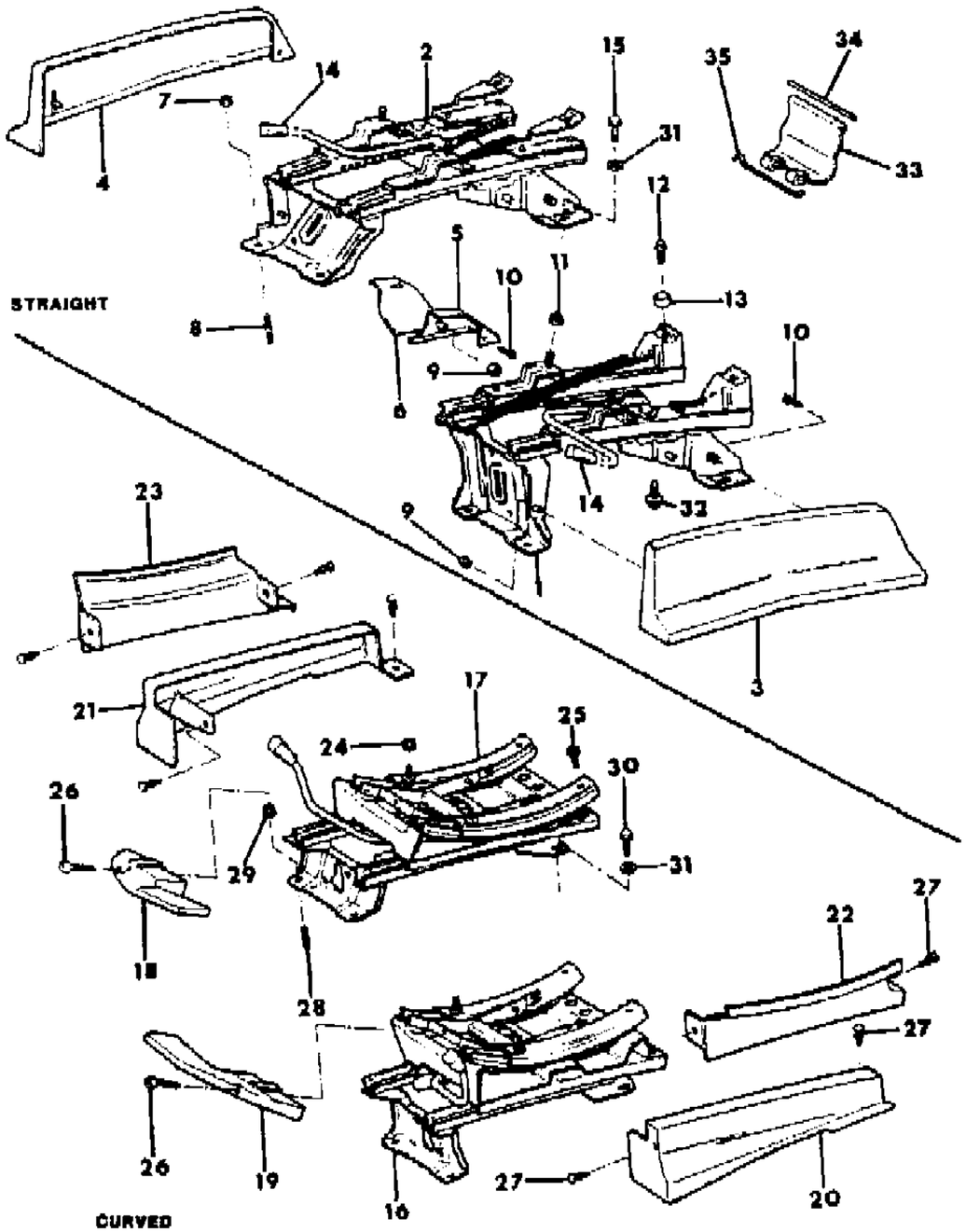

ITEM	PART NUMBER	QTY	BODY	MODEL	DESCRIPTION
1	5500 0381	1			TRACK, Seat
2	5500 0382	1			TRACK, Seat Track
3					COVER, Track
	5500 2691	1			Almond, 1984-85
	5500 2689	1			Slate Blue, 1984-85
	5500 2693	1			Garnet, 1984-85
	5500 7513	1			Honey, 1984-85
	5500 2695	1			Nutmeg, 1984-85
	5500 7513	1			Prime, P.A.R., 1986
4					COVER, Track
	5500 2690	1			Almond, 1984-85
	5500 2688	1			Slate Blue, 1984-85
	5500 2692	1			Garnet, 1984-85
	5500 7512	1			Honey, 1984-85
	5500 2694	1			Nutmeg, 1984-85
	5500 7512	1			Prime, P.A.R., 1986
5					COVER, Track
	5500 2913	1			Almond, 1984-85
	5500 2911	1			Slate Blue, 1984-85
	5500 2915	1			Garnet, 1984-85
	5500 7515	1			Honey, 1984-85
	5500 2917	1			Nutmeg, 1984-85
	5500 7515	1			Prime, P.A.R., 1986
6					COVER, Track
	5500 2912	1			Almond, 1984-85
	5500 2910	1			Slate Blue, 1984-85
	5500 2914	1			Garnet, 1984-85
	5500 7514	1			Honey, 1984-85
	5500 2916	1			Nutmeg, 1984-85
	5500 7514	1			Prime, P.A.R., 1986
7	1150 2811	8			NUT
8	3420 1713	8			STUD
9	J400 6535	4			NUT
10	1150 1012	4			SCREW
11	1150 2729	4			NUT
12					BOLT
	1150 4735	4			16mm
	1150 4331	4			35mm
13	5500 5555	8			SPACER

MODEL CODES

16=Cherokee 2 Dr.(1981-83)	78=Cherokee 4WD-4 Dr.(1984-86)	64=Comanche 2WD-6 Ft. Box(1986)	25=J-10 Truck 7 Ft. Box(1981-84)
17=Cherokee 2 Dr.(1981-83)	85=CJ-5 (1981-83)	66=Comanche 2WD-7 Ft. Box(1986)	26=J10 Truck 8 Ft. Box(1981-86)
73=Cherokee 2WD-2 Dr.(1984-86)	86=CJ-6(1981)	63=Comanche 4WD-6 Ft. Box(1986)	27=J-20 Truck 8 Ft. Box(1981-86)
74=Cherokee 2WD-4 Dr.(1984-86)	87=CJ-7(1981-86)	65=Comanche 4WD-7 Ft. Box(1986)	15=Wagoneer 4 Dr.(1981-83)
18=Cherokee 4 Dr.(1981-83)	88=CJ-8, Scrambler(1981-86)	15=Grand Wagoneer 4 Dr.(1984-86)	75=Wagoneer 4WD-4 Dr.(1984-86)
77=Cherokee 4WD-2 Dr.(1984-86)			

BODY
CJ=CJ-5, CJ-6, CJ-7, CJ-8, Scrambler(1981-86)
MJ=Comanche Pickup(1986)

STYLES
SJ=Wagoneer(1981-83), Grand Wagoneer(1984-86), Cherokee(1981-83), J-10, J-20(1981-86)
XJ=Wagoneer(1984-86), Cherokee(1984-86)

AR = Use as Required - = Non Illustrated Part P.A.R. = Paint as Required

SEAT TRACK, W/O POWER SEATS BUCKET SEATS XJ CHEROKEE, XJ WAGONEER
Figure 47-3800

81J 047 3800

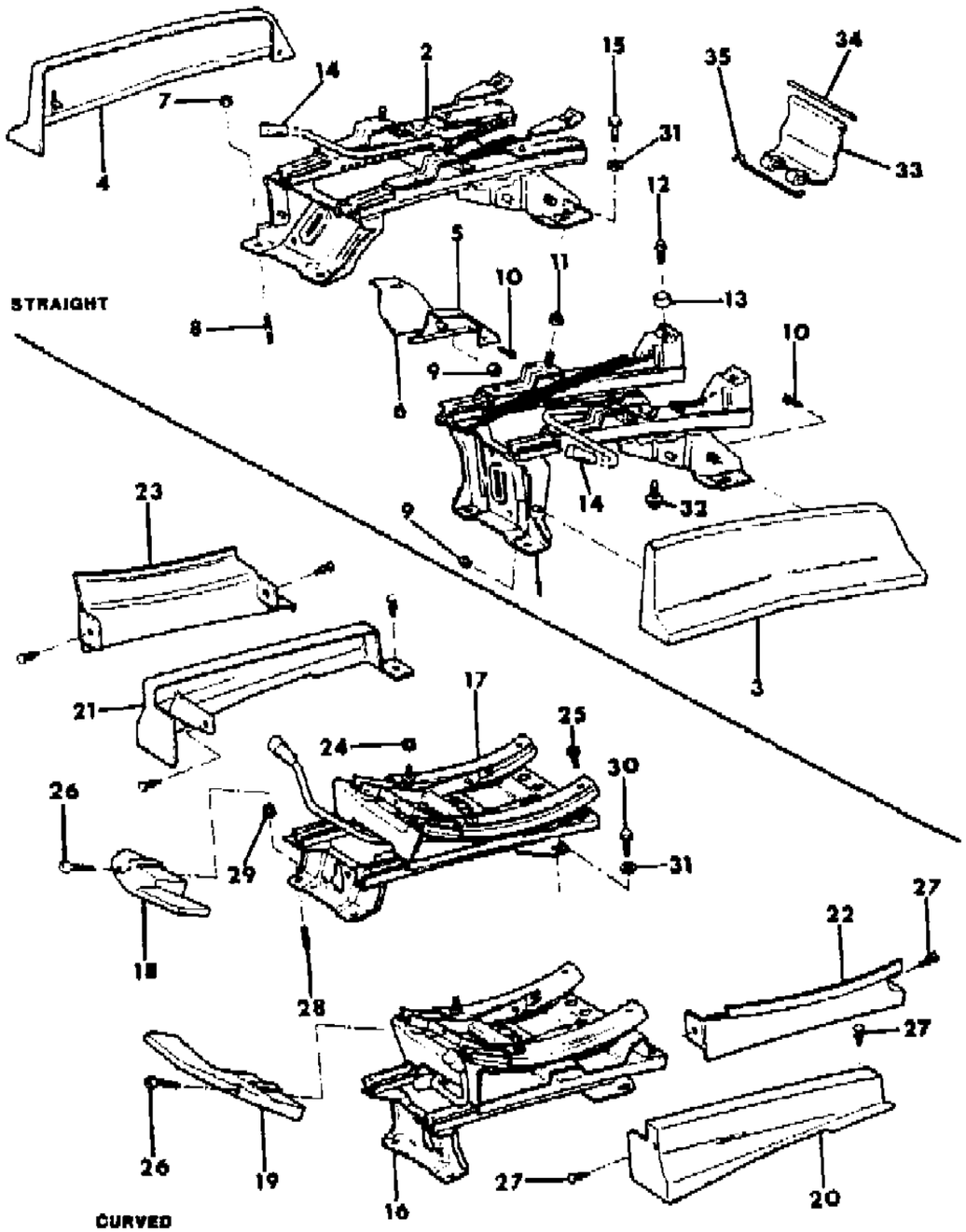

ITEM	PART NUMBER	QTY	BODY	MODEL	DESCRIPTION
14	8350 1412	2			KNOB, Seat Latch
15	3420 1257	4			BOLT
16	5500 6603	1			TRACK
17	5500 6602	1			TRACK
18	5500 6970	1			HANDLE, Rocker
19	5500 6971	1			HANDLE, Rocker
20					COVER, Track
	5500 7039	1			Almond, 1984-85
	5500 8757	1			Med. Blue, 1984-85
	5500 7037	1			Slate Blue, 1984-85
	5500 7041	1			Garnet, 1984-85
	5500 7043	1			Honey, 1984-85
	5500 7043	1			Prime, P.A.R., 1986
21					COVER, Track
	5500 7038	1			Almond, 1984-85
	5500 8756	1			Med. Blue, 1984-85
	5500 7036	1			Slate Blue, 1984-85
	5500 7040	1			Garnet, 1984-85
	5500 7042	1			Honey, 1984-85
	5500 7042	1			Prime, P.A.R., 1986
22					COVER, Track
	5500 7219	1			Almond, 1984-85
	5500 8761	1			Med. Blue, 1984-85
	5500 7217	1			Slate Blue, 1984-85
	5500 7221	1			Garnet, 1984-85
	5500 7223	1			Honey, 1984-85
	5500 7223	1			Prime, P.A.R., 1986
23					COVER, Track
	5500 7218	1			Almond, 1984-85
	5500 8760	1			Med. Blue, 1984-85
	5500 7216	1			Slate Blue, 1984-85
	5500 7220	1			Garnet, 1984-85
	5500 7222	1			Honey, 1984-85
	5500 7222	1			Prime, P.A.R., 1986
24	1150 2729	8			NUT
25	1150 4735	4			BOLT
26	T302 5006	2			SCREW
27	3420 2138	12			FASTENER
28	3420 1713	8			STUD

MODEL CODES

16=Cherokee 2 Dr.(1981-83)
17=Cherokee 2 Dr.(1981-83)
73=Cherokee 2WD-2 Dr.(1984-86)
74=Cherokee 2WD-4 Dr.(1984-86)
18=Cherokee 4 Dr.(1981-83)
77=Cherokee 4WD-2 Dr.(1984-86)
78=Cherokee 4WD-4 Dr.(1984-86)
85=CJ-5 (1981-83)
86=CJ-6(1981)
87=CJ-7(1981-86)
88=CJ-8, Scrambler(1981-86)
64=Comanche 2WD-6 Ft. Box(1986)
66=Comanche 2WD-7 Ft. Box(1986)
63=Comanche 4WD-6 Ft. Box(1986)
65=Comanche 4WD-7 Ft. Box(1986)
15=Grand Wagoneer 4 Dr.(1984-86)
25=J-10 Truck 7 Ft. Box(1981-84)
26=J10 Truck 8 Ft. Box(1981-86)
27=J-20 Truck 8 Ft. Box(1981-86)
15=Wagoneer 4 Dr.(1981-83)
75=Wagoneer 4WD-4 Dr.(1984-86)

BODY
CJ=CJ-5, CJ-6, CJ-7, CJ-8, Scrambler(1981-86)
MJ=Comanche Pickup(1986)

STYLES
SJ=Wagoneer(1981-83), Grand Wagoneer(1984-86), Cherokee(1981-83), J-10, J-20(1981-86)
XJ=Wagoneer(1984-86), Cherokee(1984-86)

AR = Use as Required - = Non Illustrated Part P.A.R. = Paint as Required

SEAT TRACK, W/O POWER SEATS BUCKET SEATS XJ CHEROKEE, XJ WAGONEER
Figure 47-3800

81J 047 3800

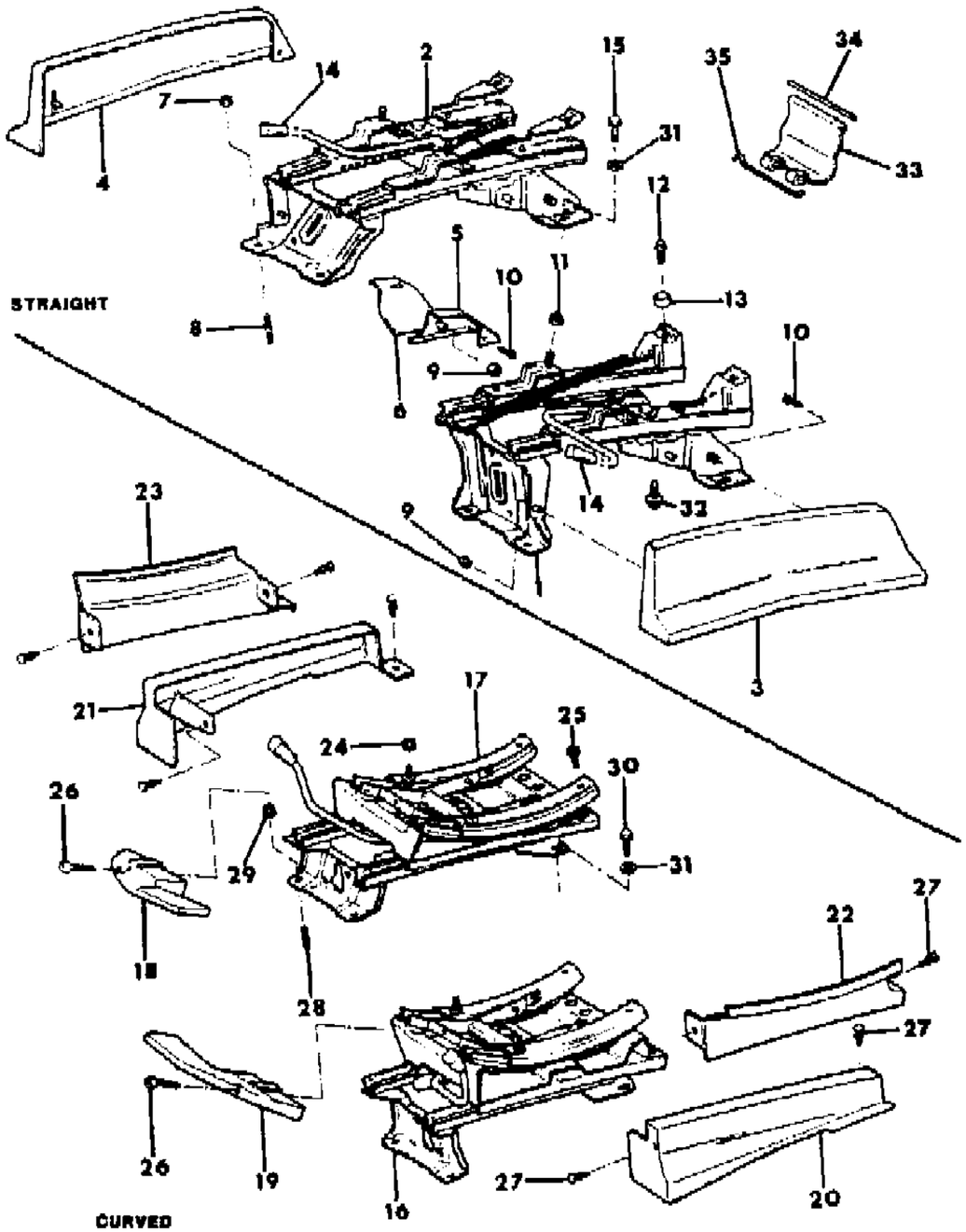

ITEM	PART NUMBER	QTY	BODY	MODEL	DESCRIPTION
29	1150 2811	8			NUT
30	3420 1257	4			BOLT
31	1150 0323	4			WASHER
32	1150 0994	2			SCREW
33					COVER, Carpet, 1984-85
	5500 4083	2			Almond
	5500 4082	2			Slate Blue
	5500 4084	2			Garnet
	5500 6116	2			Honey
	5500 4085	2			Nutmeg
34	5500 3346	2			WIRE, Cover
35	5500 3695	2			WIRE, Cover

MODEL CODES
16=Cherokee 2 Dr.(1981-83)
17=Cherokee 2 Dr.(1981-83)
73=Cherokee 2WD-2 Dr.(1984-86)
74=Cherokee 2WD-4 Dr.(1984-86)
18=Cherokee 4 Dr.(1981-83)
77=Cherokee 4WD-2 Dr.(1984-86)
78=Cherokee 4WD-4 Dr.(1984-86)
85=CJ-5 (1981-83)
86=CJ-6(1981)
87=CJ-7(1981-86)
88=CJ-8, Scrambler(1981-86)
64=Comanche 2WD-6 Ft. Box(1986)
66=Comanche 2WD-7 Ft. Box(1986)
63=Comanche 4WD-6 Ft. Box(1986)
65=Comanche 4WD-7 Ft. Box(1986)
15=Grand Wagoneer 4 Dr.(1984-86)
25=J-10 Truck 7 Ft. Box(1981-84)
26=J10 Truck 8 Ft. Box(1981-86)
27=J-20 Truck 8 Ft. Box(1981-86)
15=Wagoneer 4 Dr.(1981-83)
75=Wagoneer 4WD-4 Dr.(1984-86)

BODY
CJ=CJ-5, CJ-6, CJ-7, CJ-8, Scrambler(1981-86)
MJ=Comanche Pickup(1986)

STYLES
SJ=Wagoneer(1981-83), Grand Wagoneer(1984-86), Cherokee(1981-83), J-10, J-20(1981-86)
XJ=Wagoneer(1984-86), Cherokee(1984-86)

AR = Use as Required - = Non Illustrated Part P.A.R. = Paint as Required

« RETURN TO GROUP INDEX

SEAT TRACK, W/POWER SEATS BUCKET SEATS XJ CHEROKEE, XJ WAGONEER
Figure 47-3900

81J 047 3900 A

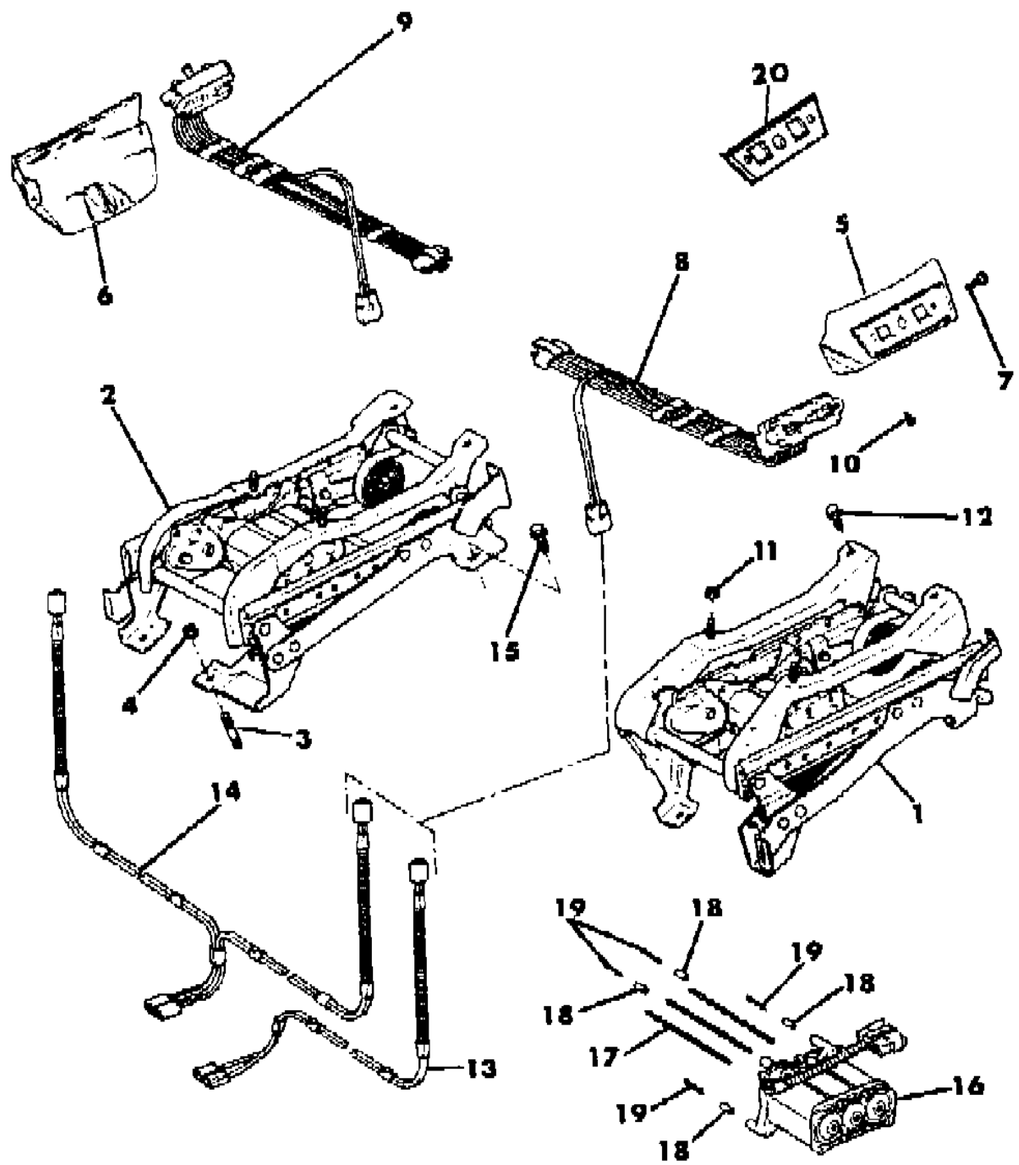

ITEM	PART NUMBER	QTY	BODY	MODEL	DESCRIPTION
1	5500 8543	1			TRACK, Seat
2	5500 8542	1			TRACK, Seat
3	3420 1713	8			STUD
4	1150 2811	8			NUT
5					BEZEL, Switch
	5500 6819	1			Almond/Black, 1984-85
	5500 4647	1			Almond/Woodgrain, 1984-85
	5501 0687	1			Med. Blue/Black, 1984-85
	5500 6817	1			Slate Blue/Black, 1984-85
	5500 4645	1			Slate Blue/Woodgrain, 1984-85
	5500 6821	1			Garnet/Black, 1984-85
	5500 4649	1			Garnet/Woodgrain, 1984-85
	5500 6127	1			Honey/Black, 1984-85
	5500 6847	1			Honey/Woodgrain, 1984-85
	5500 6823	1			Nutmeg/Black, 1984-85
	5500 4651	1			Nutmeg/Woodgrain, 1984-85
	5501 0693	1			P.A.R., 1986
6					BEZEL, Switch
	5500 6818	1			Almond/Black, 1984-85
	5500 4646	1			Almond/Woodgrain, 1984-85
	5501 0686	1			Med. Blue/Black, 1984-85
	5500 6816	1			Slate Blue/Black, 1984-85
	5500 4644	1			Slate Blue/Woodgrain, 1984-85
	5500 6820	1			Garnet/Black, 1984-85
	5500 4648	1			Garnet/Woodgrain, 1984-85
	5500 6126	1			Honey/Black, 1984-85
	5500 6846	1			Honey/Woodgrain, 1984-85
	5500 6822	1			Nutmeg/Black, 1984-85
	5500 4650	1			Nutmeg/Woodgrain, 1984-85
	5501 0692	1			P.A.R., 1986
7					SCREW
	3420 1292	6			13mm
	J400 4664	6			20mm
8					SWITCH, Power Seat
	5600 0457	1			1984-85
	5600 1599	1			1986
9					SWITCH, Power Seat
	5600 0456	1			1984-85
	5600 1598	1			1986

MODEL CODES

16=Cherokee 2 Dr.(1981-83)
17=Cherokee 2 Dr.(1981-83)
73=Cherokee 2WD-2 Dr.(1984-86)
74=Cherokee 2WD-4 Dr.(1984-86)
18=Cherokee 4 Dr.(1981-83)
77=Cherokee 4WD-2 Dr.(1984-86)
78=Cherokee 4WD-4 Dr.(1984-86)
85=CJ-5 (1981-83)
86=CJ-6(1981)
87=CJ-7(1981-86)
88=CJ-8, Scrambler(1981-86)
64=Comanche 2WD-6 Ft. Box(1986)
66=Comanche 2WD-7 Ft. Box(1986)
63=Comanche 4WD-6 Ft. Box(1986)
65=Comanche 4WD-7 Ft. Box(1986)
15=Grand Wagoneer 4 Dr.(1984-86)
25=J-10 Truck 7 Ft. Box(1981-84)
26=J10 Truck 8 Ft. Box(1981-86)
27=J-20 Truck 8 Ft. Box(1981-86)
15=Wagoneer 4 Dr.(1981-83)
75=Wagoneer 4WD-4 Dr.(1984-86)

BODY
CJ=CJ-5, CJ-6, CJ-7, CJ-8, Scrambler(1981-86)
MJ=Comanche Pickup(1986)

STYLES
SJ=Wagoneer(1981-83), Grand Wagoneer(1984-86), Cherokee(1981-83), J-10, J-20(1981-86)
XJ=Wagoneer(1984-86), Cherokee(1984-86)

AR = Use as Required - = Non Illustrated Part P.A.R. = Paint as Required

SEAT TRACK, W/POWER SEATS BUCKET SEATS XJ CHEROKEE, XJ WAGONEER
Figure 47-3900

81J 047 3900 A

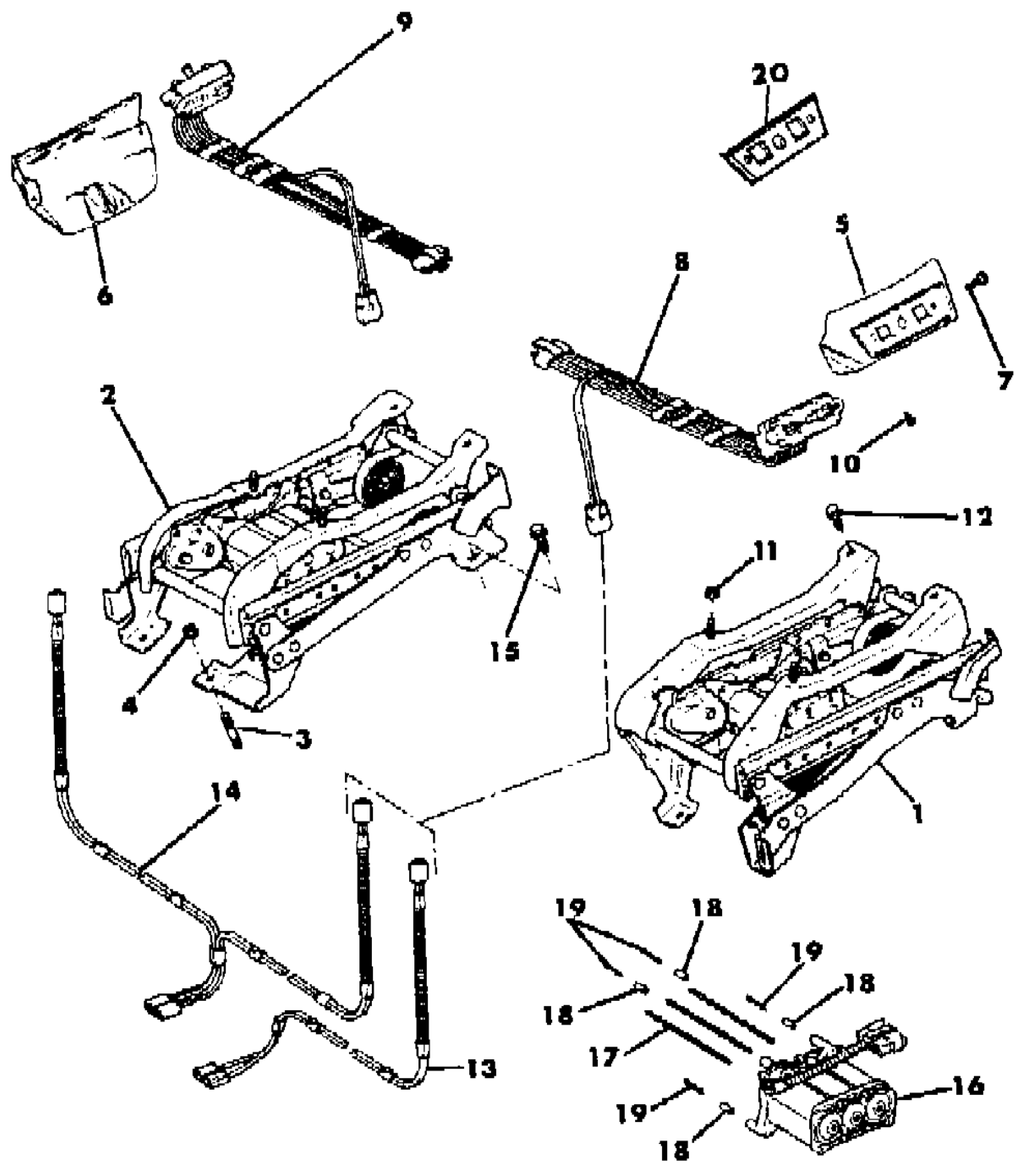

ITEM	PART NUMBER	QTY	BODY	MODEL	DESCRIPTION
10	3420 1781	4			SCREW
11	1150 2729	4			NUT
12	1150 4735	4			BOLT
13	5600 1229	1			HARNESS, Seat ***
14	5600 1230	1			HARNESS, Seat ***
15					SCREW
	3420 1257	2			1984-85
	3420 1888	2			1986
16	5600 1587	2			MOTOR
17	8350 2059	6			CABLE
18	8350 2060	8			BUSHING
19	8350 2061	8			SCREW
20					OVERLAY ***
	5500 4508	2			Woodgrain
	5500 6716	2			Black

MODEL CODES

16=Cherokee 2 Dr.(1981-83)
17=Cherokee 2 Dr.(1981-83)
73=Cherokee 2WD-2 Dr.(1984-86)
74=Cherokee 2WD-4 Dr.(1984-86)
18=Cherokee 4 Dr.(1981-83)
77=Cherokee 4WD-2 Dr.(1984-86)
78=Cherokee 4WD-4 Dr.(1984-86)
85=CJ-5 (1981-83)
86=CJ-6(1981)
87=CJ-7(1981-86)
88=CJ-8, Scrambler(1981-86)
64=Comanche 2WD-6 Ft. Box(1986)
66=Comanche 2WD-7 Ft. Box(1986)
63=Comanche 4WD-6 Ft. Box(1986)
65=Comanche 4WD-7 Ft. Box(1986)
15=Grand Wagoneer 4 Dr.(1984-86)
25=J-10 Truck 7 Ft. Box(1981-84)
26=J10 Truck 8 Ft. Box(1981-86)
27=J-20 Truck 8 Ft. Box(1981-86)
15=Wagoneer 4 Dr.(1981-83)
75=Wagoneer 4WD-4 Dr.(1984-86)

BODY
CJ=CJ-5, CJ-6, CJ-7, CJ-8, Scrambler(1981-86)
MJ=Comanche Pickup(1986)

STYLES
SJ=Wagoneer(1981-83), Grand Wagoneer(1984-86), Cherokee(1981-83), J-10, J-20(1981-86)
XJ=Wagoneer(1984-86), Cherokee(1984-86)

AR = Use as Required - = Non Illustrated Part P.A.R. = Paint as Required

COVERS, FRONT SEAT TRACK BUCKET SEATS, W/POWER SEATS XJ CHEROKEE, XJ WAGONEER
Figure 47-4000

81J 047 4000

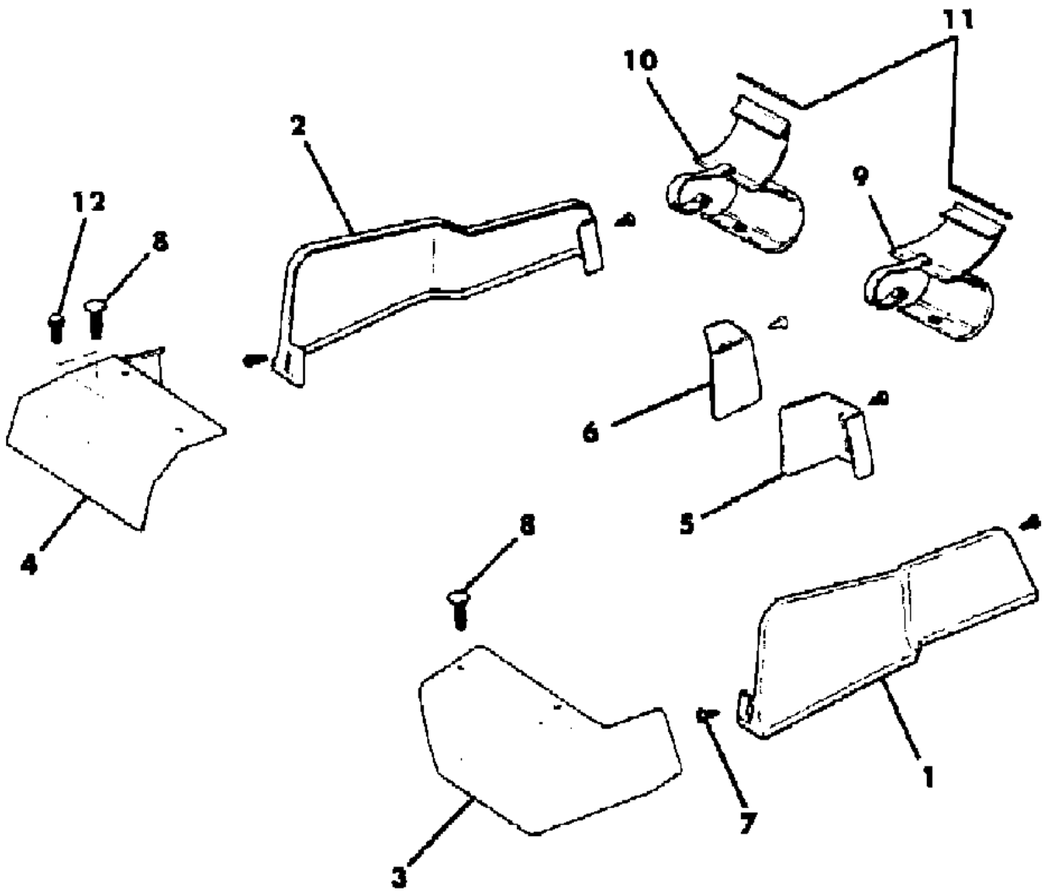

ITEM	PART NUMBER	QTY	BODY	MODEL	DESCRIPTION
1					COVER, Track
	5500 4609	1			Almond, 1984-85
	5500 8781	1			Medium Blue, 1984-85
	5500 4607	1			Slate Blue, 1984-85
	5500 4611	1			Garnet, 1984-85
	5500 6131	1			Honey, 1984-85
	5500 4613	1			Nutmeg, 1984-85
	5500 6131	1			1986
2					COVER, Track
	5500 4608	1			Almond, 1984-85
	5500 8780	1			Medium, Blue
	5500 4606	1			Slate Blue, 1984-85
	5500 4610	1			Garnet, 1984-85
	5500 6130	1			Honey, 1984-85
	5500 4612	1			Nutmeg, 1984-85
	5500 6130	1			1986
3					COVER, Track
	5500 4763	1			Almond, 1984-85
	5500 8785	1			Medium Blue, 1984-85
	5500 4761	1			Slate Blue, 1984-85
	5500 4765	1			Garnet, 1984-85
	5500 6133	1			Honey, 1984-85
	5500 4767	1			Nutmeg, 1984-85
	5500 6133	1			1986
4					COVER, Track
	5500 4762	1			Almond, 1984-85
	5500 8784	1			Medium Blue, 1984-85
	5500 4760	1			Slate Blue, 1984-85
	5500 4764	1			Garnet, 1984-85
	5500 6132	1			Honey, 1984-85
	5500 4766	1			Nutmeg, 1984-85
	5500 6132	1			1986
5					COVER, Track
	5500 4617	1			Almond, 1984-85
	5500 8789	1			Medium Blue, 1984-85
	5500 4615	1			Slate Blue, 1984-85
	5500 4619	1			Garnet, 1984-85
	5500 6175	1			Honey, 1984-85
	5500 4621	1			Nutmeg, 1984-85

MODEL CODES

16=Cherokee 2 Dr.(1981-83)	78=Cherokee 4WD-4 Dr.(1984-86)	64=Comanche 2WD-6 Ft. Box(1986)	25=J-10 Truck 7 Ft. Box(1981-84)
17=Cherokee 2 Dr.(1981-83)	85=CJ-5 (1981-83)	66=Comanche 2WD-7 Ft. Box(1986)	26=J10 Truck 8 Ft. Box(1981-86)
73=Cherokee 2WD-2 Dr.(1984-86)	86=CJ-6(1981)	63=Comanche 4WD-6 Ft. Box(1986)	27=J-20 Truck 8 Ft. Box(1981-86)
74=Cherokee 2WD-4 Dr.(1984-86)	87=CJ-7(1981-86)	65=Comanche 4WD-7 Ft. Box(1986)	15=Wagoneer 4 Dr.(1981-83)
18=Cherokee 4 Dr.(1981-83)	88=CJ-8, Scrambler(1981-86)	15=Grand Wagoneer 4 Dr.(1984-86)	75=Wagoneer 4WD-4 Dr.(1984-86)
77=Cherokee 4WD-2 Dr.(1984-86)			

BODY
CJ=CJ-5, CJ-6, CJ-7, CJ-8, Scrambler(1981-86)
MJ=Comanche Pickup(1986)

STYLES
SJ=Wagoneer(1981-83), Grand Wagoneer(1984-86), Cherokee(1981-83), J-10, J-20(1981-86)
XJ=Wagoneer(1984-86), Cherokee(1984-86)

AR = Use as Required - = Non Illustrated Part P.A.R. = Paint as Required

COVERS, FRONT SEAT TRACK BUCKET SEATS, W/POWER SEATS XJ CHEROKEE, XJ WAGONEER
Figure 47-4000

81J 047 4000

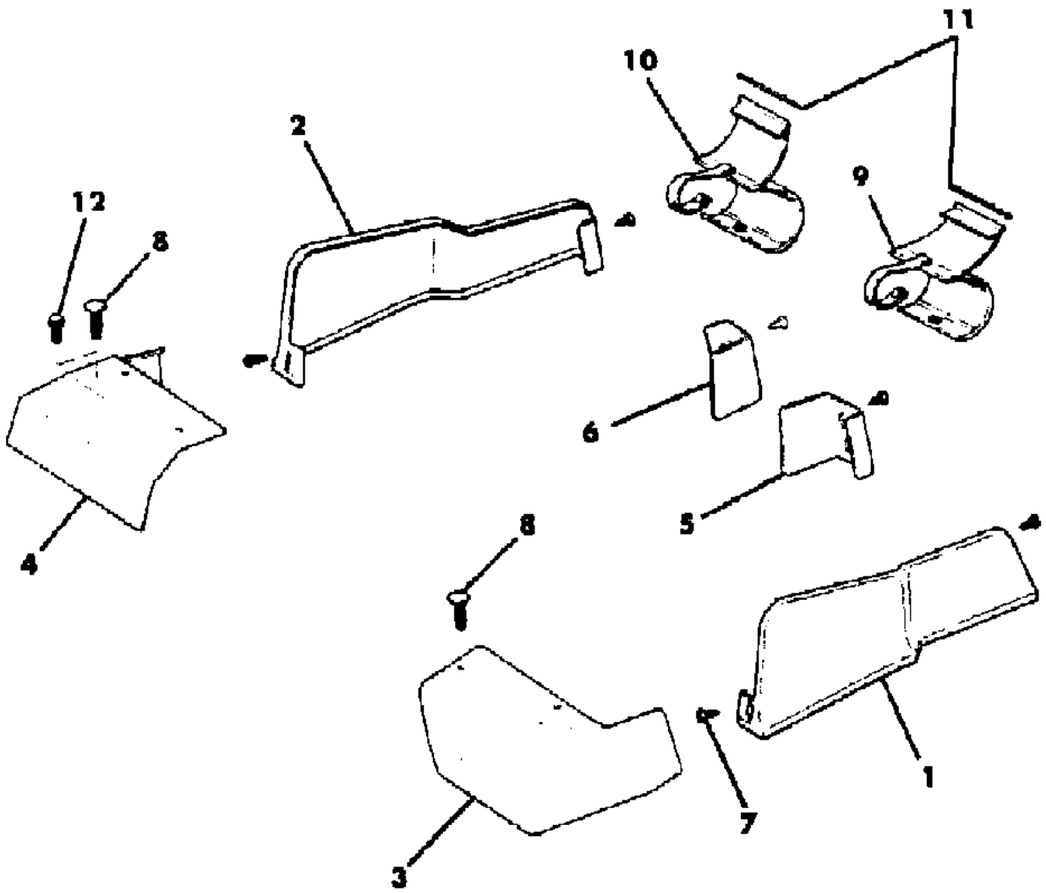

ITEM	PART NUMBER	QTY	BODY	MODEL	DESCRIPTION
	5500 6135	1			1986
6					COVER, Track
	5500 4616	1			Almond, 1984-85
	5500 8788	1			Medium Blue, 1984-85
	5500 4614	1			Slate Blue, 1984-85
	5500 4618	1			Garnet, 1984-85
	5500 6134	1			Honey, 1984-85
	5500 4620	1			Nutmeg, 1984-85
	5500 6134	1			1986
7	1150 1012	12			SCREW
8					FASTENER
	J400 7103	4			Almond
	J400 6929	4			Slate Blue
	J400 7104	4			Garnet
	J400 6534	4			Nutmeg
9					COVER, Carpet
	5500 6690	1			Almond, 1984-85
	5500 8750	1			Black, w/o Cherokee Limited Model, 1986
	5501 8806	1			Black, w/Cherokee Limied Model, 1986
	5500 8748	1			Medium Blue, 1984-86
	5500 6688	1			Slate Blue, 1984-85
	5501 2040	1			Cordovan, w/o Wagoneer Limited/Cherokee Laredo Model, 1986
	5501 2048	1			Cordovan, w/Wagoneer/Cherokee Laredo Model, 1986
	5500 6692	1			Garnet, w/o Wagoneer Limited/Cherokee Laredo Model, 1984-86
	5500 6696	1			Garnet, w/Wagoneer Limited/Cherokee Laredo Model, 1984-86
	5500 6704	1			Honey, w/o Wagoneer Limited/Cherokee Laredo Model, 1984-86
	5500 6706	1			Honey, w/Wagoneer Limited/Cherokee Laredo Model, 1984-86
	5500 6698	1			Nutmeg, 1984-85
	5501 2042	1			Tan, w/o Wagoneer Limited/Cherokee Laredo Model, 1986
	5501 2050	1			Tan, w/Wagoneer Limited/Cherokee Laredo Model, 1986
10					COVER, Carpet
	5500 6691	1			Almond, 1984-85
	5500 8751	1			Black, w/o Cherokee Limited Model, 1986
	5501 8807	1			Black, w/Cherokee Limited Model, 1986
	5500 8749	1			Medium Blue, 1984-86
	5500 6689	1			Slate Blue, 1984-85

MODEL CODES

16=Cherokee 2 Dr.(1981-83)	78=Cherokee 4WD-4 Dr.(1984-86)	64=Comanche 2WD-6 Ft. Box(1986)	25=J-10 Truck 7 Ft. Box(1981-84)
17=Cherokee 2 Dr.(1981-83)	85=CJ-5 (1981-83)	66=Comanche 2WD-7 Ft. Box(1986)	26=J10 Truck 8 Ft. Box(1981-86)
73=Cherokee 2WD-2 Dr.(1984-86)	86=CJ-6(1981)	63=Comanche 4WD-6 Ft. Box(1986)	27=J-20 Truck 8 Ft. Box(1981-86)
74=Cherokee 2WD-4 Dr.(1984-86)	87=CJ-7(1981-86)	65=Comanche 4WD-7 Ft. Box(1986)	15=Wagoneer 4 Dr.(1981-83)
18=Cherokee 4 Dr.(1981-83)	88=CJ-8, Scrambler(1981-86)	15=Grand Wagoneer 4 Dr.(1984-86)	75=Wagoneer 4WD-4 Dr.(1984-86)
77=Cherokee 4WD-2 Dr.(1984-86)			

BODY
CJ=CJ-5, CJ-6, CJ-7, CJ-8, Scrambler(1981-86)
MJ=Comanche Pickup(1986)

STYLES
SJ=Wagoneer(1981-83), Grand Wagoneer(1984-86), Cherokee(1981-83), J-10, J-20(1981-86)
XJ=Wagoneer(1984-86), Cherokee(1984-86)

AR = Use as Required - = Non Illustrated Part P.A.R. = Paint as Required

COVERS, FRONT SEAT TRACK BUCKET SEATS, W/POWER SEATS XJ CHEROKEE, XJ WAGONEER
Figure 47-4000

81J 047 4000

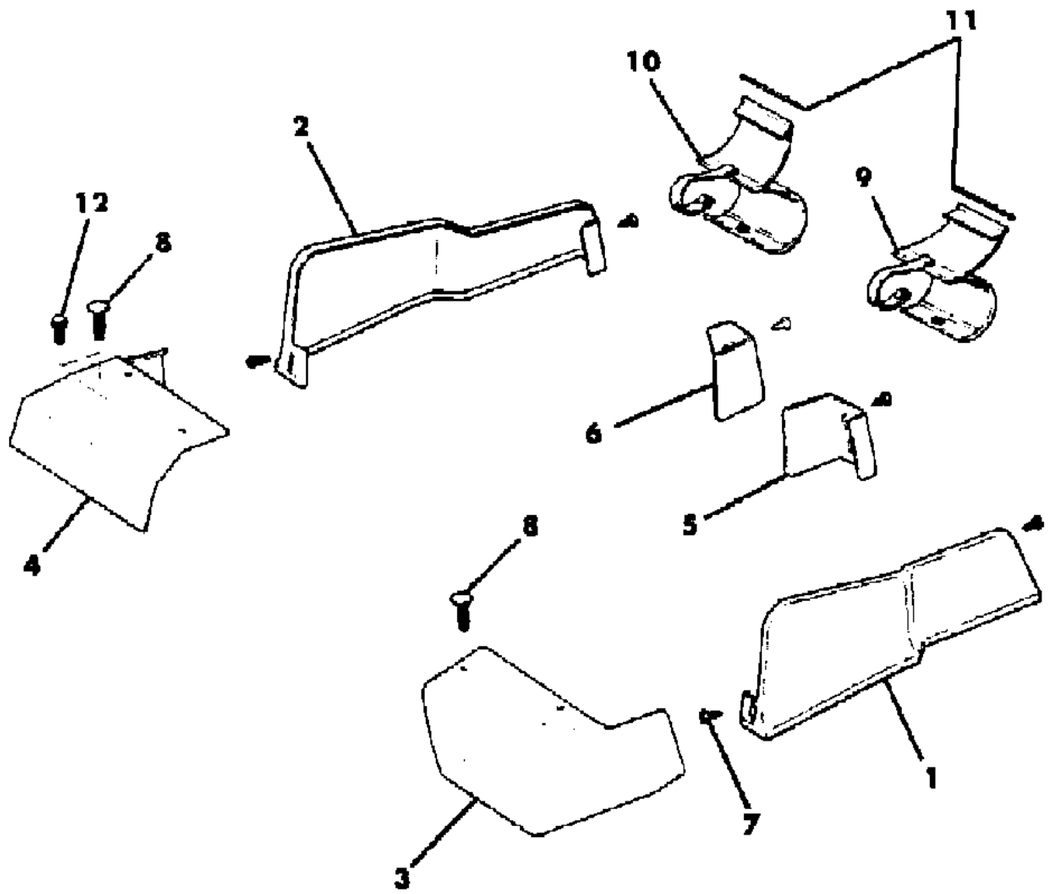

ITEM	PART NUMBER	QTY	BODY	MODEL	DESCRIPTION
	5501 2041	1			Cordovan, w/o Wagoneer Limited/Cherokee Laredo Model, 1986
	5501 2049	1			Cordovan, w/Wagoneer Limited/Cherokee Laredo Model, 1986
	5500 6693	1			Garnet, w/o Wagoneer Limited/Cherokee Laredo Model, 1984-86
	5500 6697	1			Garnet, w/Wagoneer Limited/Cherokee Laredo Model, 1984-86
	5500 6705	1			Honey, w/o Wagoneer Limited/Cherokee Laredo Model, 1984-86
	5500 6707	1			Honey, w/Wagoneer Limited/Cherokee Laredo Model, 1984-86
	5500 6699	1			Nutmeg, 1984-85
	5501 2043	1			Tan, w/o Wagoneer Limited/Cherokee Laredo Model, 1986
	5501 2051	1			Tan, w/Wagoneer Limited/Cherokee Laredo Model,1986
11	5500 3346	2			WIRE, Cover
12	3420 1314	4			SCREW

MODEL CODES

16=Cherokee 2 Dr.(1981-83)	78=Cherokee 4WD-4 Dr.(1984-86)	64=Comanche 2WD-6 Ft. Box(1986)	25=J-10 Truck 7 Ft. Box(1981-84)
17=Cherokee 2 Dr.(1981-83)	85=CJ-5 (1981-83)	66=Comanche 2WD-7 Ft. Box(1986)	26=J10 Truck 8 Ft. Box(1981-86)
73=Cherokee 2WD-2 Dr.(1984-86)	86=CJ-6(1981)	63=Comanche 4WD-6 Ft. Box(1986)	27=J-20 Truck 8 Ft. Box(1981-86)
74=Cherokee 2WD-4 Dr.(1984-86)	87=CJ-7(1981-86)	65=Comanche 4WD-7 Ft. Box(1986)	15=Wagoneer 4 Dr.(1981-83)
18=Cherokee 4 Dr.(1981-83)	88=CJ-8, Scrambler(1981-86)	15=Grand Wagoneer 4 Dr.(1984-86)	75=Wagoneer 4WD-4 Dr.(1984-86)
77=Cherokee 4WD-2 Dr.(1984-86)			

BODY
CJ=CJ-5, CJ-6, CJ-7, CJ-8, Scrambler(1981-86)
MJ=Comanche Pickup(1986)

STYLES
SJ=Wagoneer(1981-83), Grand Wagoneer(1984-86), Cherokee(1981-83), J-10, J-20(1981-86)
XJ=Wagoneer(1984-86), Cherokee(1984-86)

AR = Use as Required - = Non Illustrated Part P.A.R. = Paint as Required

SEAT TRACK BUCKET OR BENCH SEATS COMANCHE
Figure 47-4100

81J 047 4100

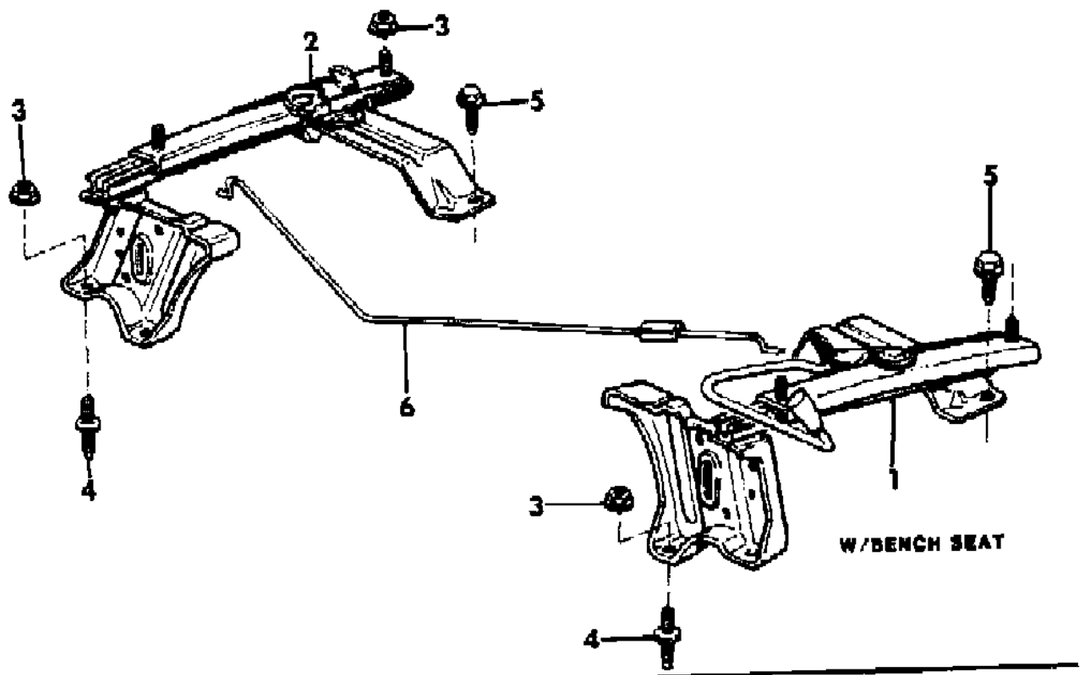

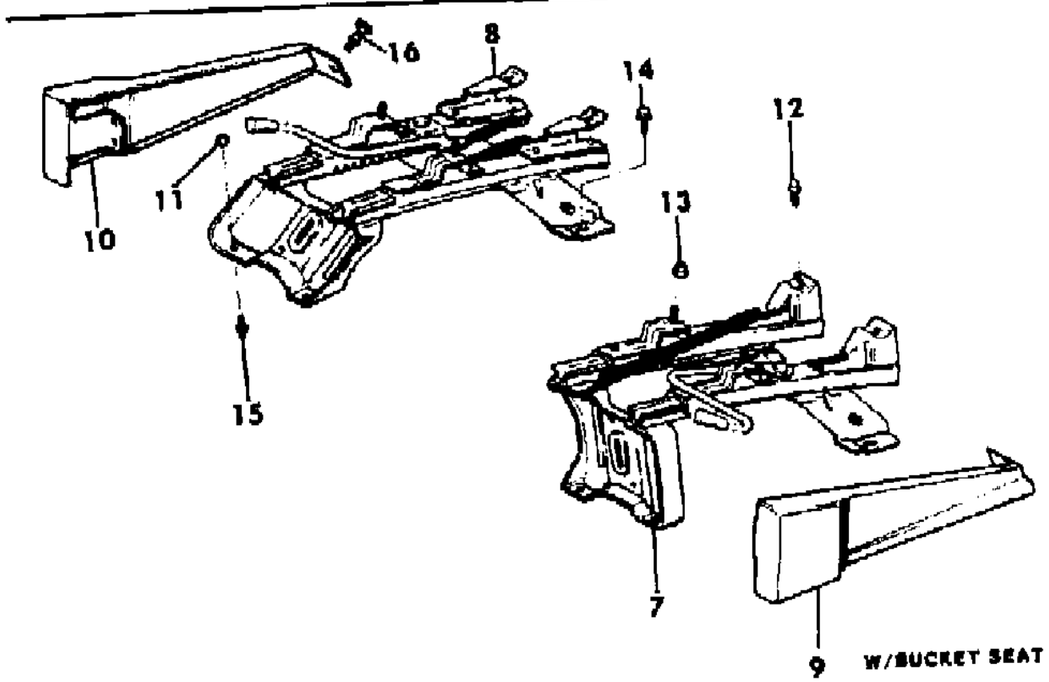

ITEM	PART NUMBER	QTY	BODY	MODEL	DESCRIPTION
1	5500 4295	1			TRACK, Seat
2	5500 4294	1			TRACK, Seat
3	1150 2811	8			NUT
4	3420 1713	4			STUD
5	3420 1888	4			SCREW
6	5501 4302	1			WIRE, Seat Adjuster
7	5500 4297	1			TRACK, Seat
8	5500 4296	1			TRACK, Seat
9	5500 6483	1			COVER, Track
10	5500 6482	1			COVER, Track
11	1150 2811	8			NUT
12	1150 4735	4			BOLT
13	1150 2729	4			NUT
14	3420 1888	4			SCREW
15	3420 1713	4			STUD
16	3420 2138	8			FASTENER

MODEL CODES
16=Cherokee 2 Dr.(1981-83)
17=Cherokee 2 Dr.(1981-83)
73=Cherokee 2WD-2 Dr.(1984-86)
74=Cherokee 2WD-4 Dr.(1984-86)
18=Cherokee 4 Dr.(1981-83)
77=Cherokee 4WD-2 Dr.(1984-86)
78=Cherokee 4WD-4 Dr.(1984-86)
85=CJ-5 (1981-83)
86=CJ-6(1981)
87=CJ-7(1981-86)
88=CJ-8, Scrambler(1981-86)
64=Comanche 2WD-6 Ft. Box(1986)
66=Comanche 2WD-7 Ft. Box(1986)
63=Comanche 4WD-6 Ft. Box(1986)
65=Comanche 4WD-7 Ft. Box(1986)
15=Grand Wagoneer 4 Dr.(1984-86)
25=J-10 Truck 7 Ft. Box(1981-84)
26=J10 Truck 8 Ft. Box(1981-86)
27=J-20 Truck 8 Ft. Box(1981-86)
15=Wagoneer 4 Dr.(1981-83)
75=Wagoneer 4WD-4 Dr.(1984-86)

BODY
CJ=CJ-5, CJ-6, CJ-7, CJ-8, Scrambler(1981-86)
MJ=Comanche Pickup(1986)

STYLES
SJ=Wagoneer(1981-83), Grand Wagoneer(1984-86), Cherokee(1981-83), J-10, J-20(1981-86)
XJ=Wagoneer(1984-86), Cherokee(1984-86)

AR = Use as Required - = Non Illustrated Part P.A.R. = Paint as Required

« RETURN TO GROUP INDEX

SEAT BELTS W/O ECE, 1984-85 XJ CHEROKEE, XJ WAGONEER
Figure 47-4200

81J 047 4200

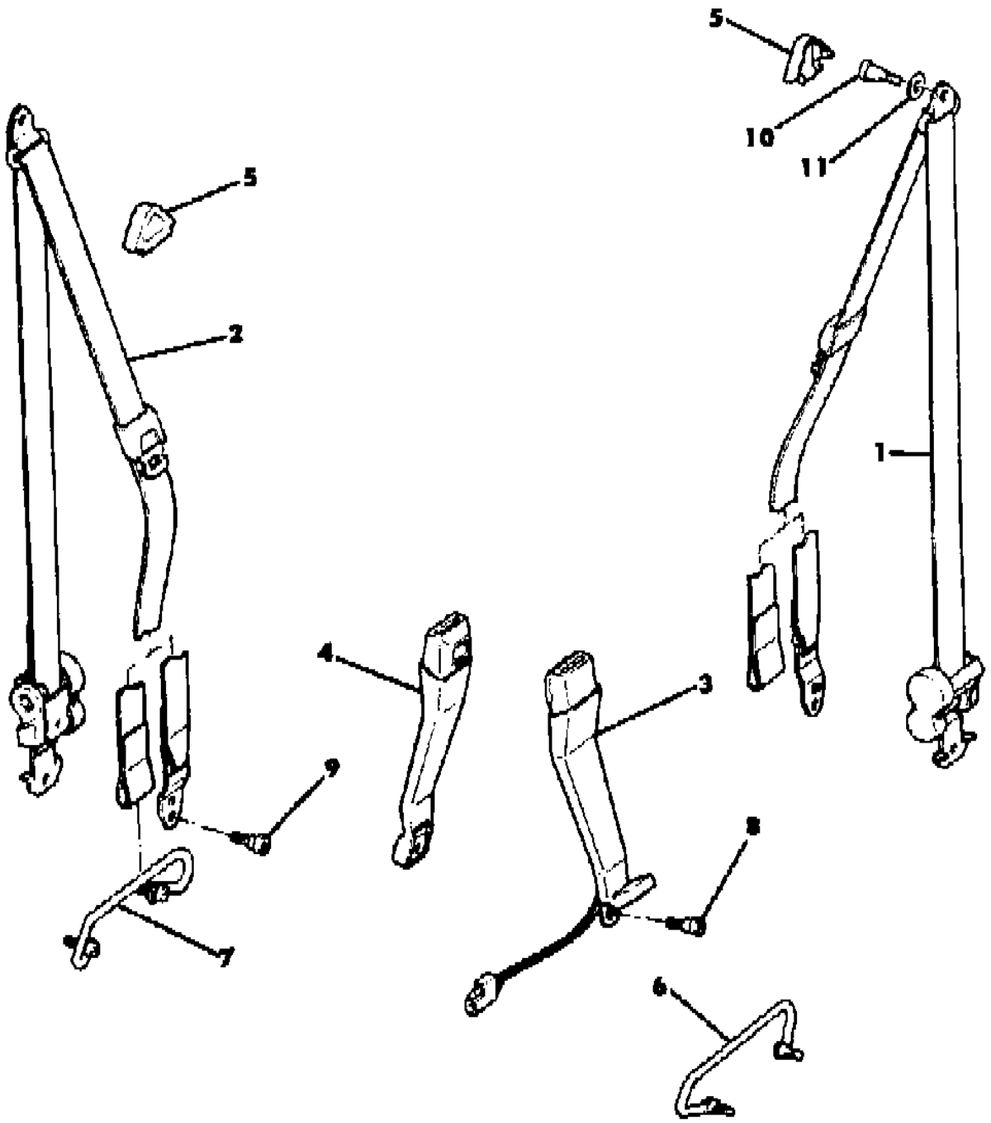

ITEM	PART NUMBER	QTY	BODY	MODEL	DESCRIPTION
1					BELT, Seat
					Two Door
	5500 3521	1			Almond
	5500 8693	1			Medium Blue
	5500 3519	1			Slate Blue
	5500 3523	1			Garnet
	5500 5845	1			Honey
	5500 3525	1			Nutmeg
					Four Door
	5500 3513	1			Almond
	5500 8687	1			Medium Blue
	5500 3511	1			Slate Blue
	5500 3515	1			Garnet
	5500 5843	1			Honey
	5500 3517	1			Nutmeg
2					BELT, Seat
					Two Door
	5500 3520	1			Almond
	5500 8692	1			Medium Blue
	5500 3518	1			Slate Blue
	5500 3522	1			Garnet
	5500 5844	1			Honey
	5500 3524	1			Nutmeg
					Four Door
	5500 3512	1			Almond
	5500 8686	1			Medium Blue
	5500 3510	1			Slate Blue
	5500 3514	1			Garnet
	5500 5842	1			Honey
	5500 3516	1			Nutmeg
3					BELT, Seat
	5500 3529	1			Almond
	5500 8697	1			Medium Blue
	5500 3527	1			Slate Blue
	5500 3531	1			Garnet
	5500 5847	1			Honey
	5500 3533	1			Nutmeg
4					BELT, Seat
	5500 3528	1			Almond

MODEL CODES

16=Cherokee 2 Dr.(1981-83)	78=Cherokee 4WD-4 Dr.(1984-86)	64=Comanche 2WD-6 Ft. Box(1986)	25=J-10 Truck 7 Ft. Box(1981-84)
17=Cherokee 2 Dr.(1981-83)	85=CJ-5 (1981-83)	66=Comanche 2WD-7 Ft. Box(1986)	26=J10 Truck 8 Ft. Box(1981-86)
73=Cherokee 2WD-2 Dr.(1984-86)	86=CJ-6(1981)	63=Comanche 4WD-6 Ft. Box(1986)	27=J-20 Truck 8 Ft. Box(1981-86)
74=Cherokee 2WD-4 Dr.(1984-86)	87=CJ-7(1981-86)	65=Comanche 4WD-7 Ft. Box(1986)	15=Wagoneer 4 Dr.(1981-83)
18=Cherokee 4 Dr.(1981-83)	88=CJ-8, Scrambler(1981-86)	15=Grand Wagoneer 4 Dr.(1984-86)	75=Wagoneer 4WD-4 Dr.(1984-86)
77=Cherokee 4WD-2 Dr.(1984-86)			

BODY
CJ=CJ-5, CJ-6, CJ-7, CJ-8, Scrambler(1981-86)
MJ=Comanche Pickup(1986)

STYLES
SJ=Wagoneer(1981-83), Grand Wagoneer(1984-86), Cherokee(1981-83), J-10, J-20(1981-86)
XJ=Wagoneer(1984-86), Cherokee(1984-86)

AR = Use as Required - = Non Illustrated Part P.A.R. = Paint as Required

81J 047 4200

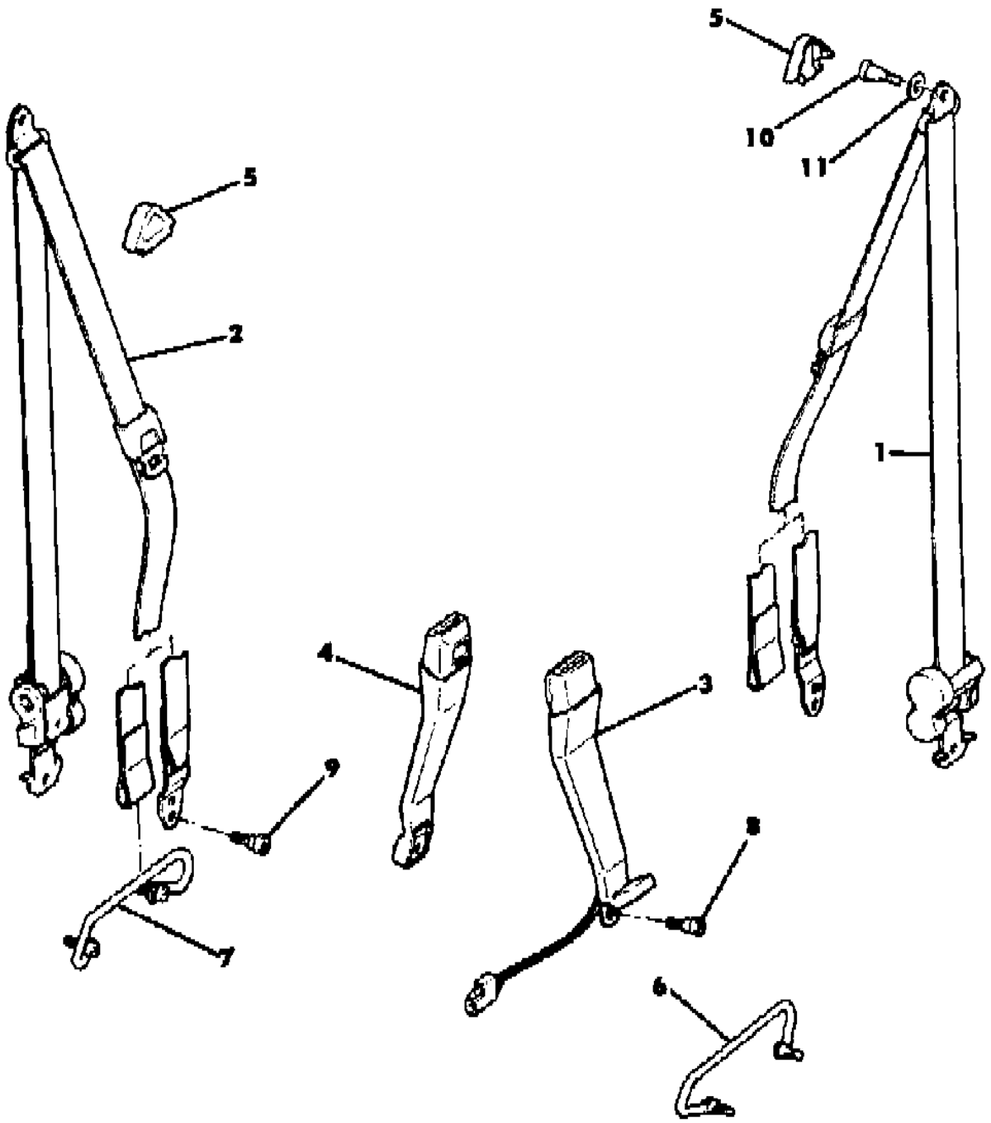

ITEM	PART NUMBER	QTY	BODY	MODEL	DESCRIPTION
	5500 8696	1			Medium Blue
	5500 3526	1			Slate Blue
	5500 3530	1			Garnet
	5500 5846	1			Honey
	5500 3532	1			Nutmeg
5					COVER, Web Guide
	5500 3382	2			Almond
	5500 8676	2			Medium Blue
	5500 3381	2			Slate Blue
	5500 3383	2			Garnet
	3500 7352	2			Honey
	5500 3384	2			Nutmeg
6	5500 2949	1			BAR, Slide, Two Door
7	5500 2948	1			BAR, Slide, Two Door
8	J400 5997	2			BOLT
9	J400 5505	6			BOLT
10					BOLT
	J400 7124	2			Two Door
	J400 5997	2			Four Door

MODEL CODES
16=Cherokee 2 Dr.(1981-83)
17=Cherokee 2 Dr.(1981-83)
73=Cherokee 2WD-2 Dr.(1984-86)
74=Cherokee 2WD-4 Dr.(1984-86)
18=Cherokee 4 Dr.(1981-83)
77=Cherokee 4WD-2 Dr.(1984-86)
78=Cherokee 4WD-4 Dr.(1984-86)
85=CJ-5 (1981-83)
86=CJ-6(1981)
87=CJ-7(1981-86)
88=CJ-8, Scrambler(1981-86)
64=Comanche 2WD-6 Ft. Box(1986)
66=Comanche 2WD-7 Ft. Box(1986)
63=Comanche 4WD-6 Ft. Box(1986)
65=Comanche 4WD-7 Ft. Box(1986)
15=Grand Wagoneer 4 Dr.(1984-86)
25=J-10 Truck 7 Ft. Box(1981-84)
26=J10 Truck 8 Ft. Box(1981-86)
27=J-20 Truck 8 Ft. Box(1981-86)
15=Wagoneer 4 Dr.(1981-83)
75=Wagoneer 4WD-4 Dr.(1984-86)

BODY
CJ=CJ-5, CJ-6, CJ-7, CJ-8, Scrambler(1981-86)
MJ=Comanche Pickup(1986)

STYLES
SJ=Wagoneer(1981-83), Grand Wagoneer(1984-86), Cherokee(1981-83), J-10, J-20(1981-86)
XJ=Wagoneer(1984-86), Cherokee(1984-86)

AR = Use as Required - = Non Illustrated Part P.A.R. = Paint as Required

SEAT BELTS W/O ECE, 1986 XJ CHEROKEE
Figure 47-4300

81J 047 4300

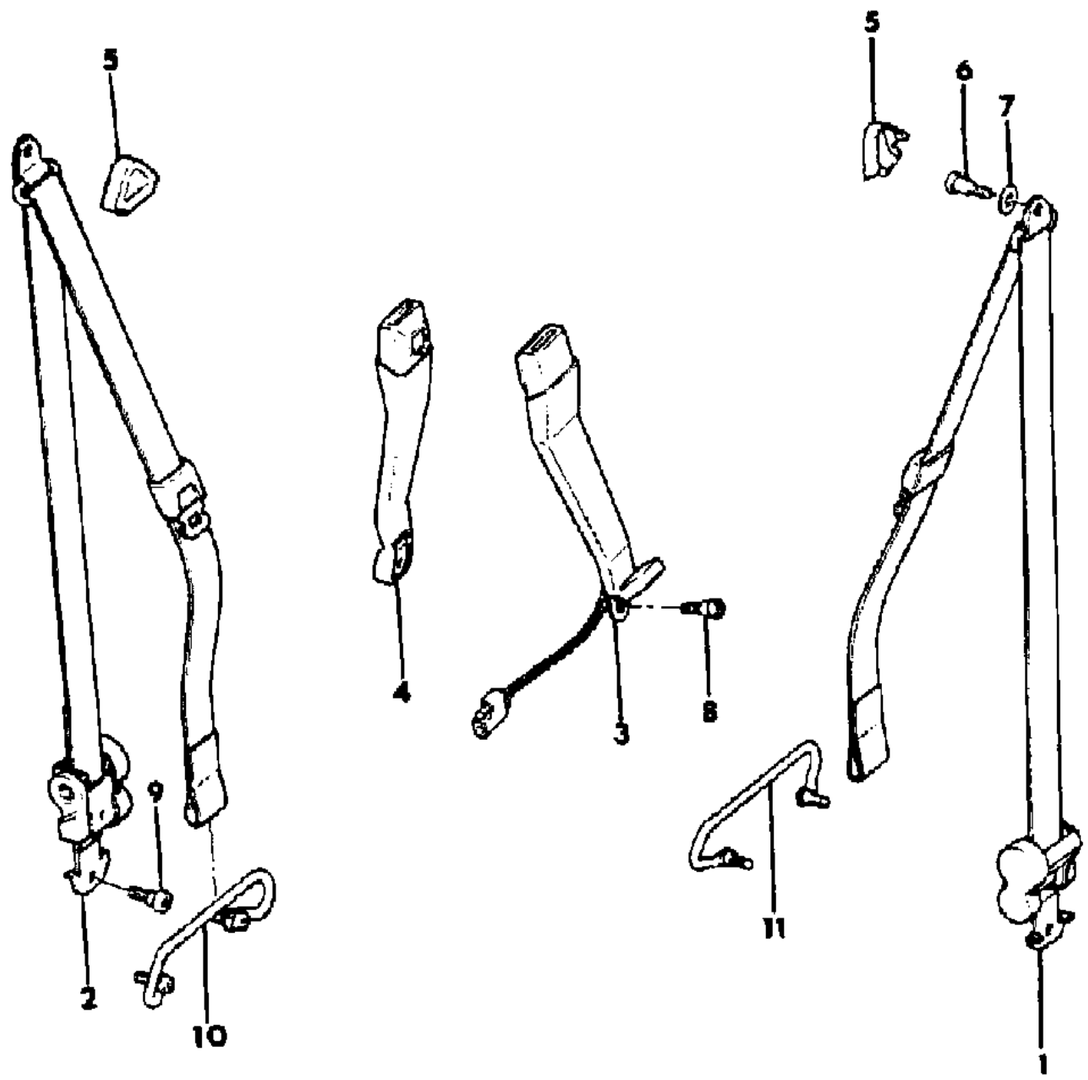

ITEM	PART NUMBER	QTY	BODY	MODEL	DESCRIPTION
1					BELT, Seat
	5500 8695	1			Black
	5500 8693	1			Medium Blue
	5501 3013	1			Cordovan
	5500 3523	1			Garnet
	5500 5845	1			Honey
	5501 3011	1			Tan
2					BELT, Seat
	5500 8694	1			Black
	5500 8692	1			Medium Blue
	5501 3012	1			Cordovan
	5500 3522	1			Garnet
	5500 5844	1			Honey
	5501 3010	1			Tan
3					BELT, Seat
	5500 8699	1			Black
	5500 8697	1			Medium Blue
	5501 5067	1			Cordovan
	5500 3531	1			Garnet
	5500 5847	1			Honey
	5501 5065	1			Tan
4					BELT, Seat
	5500 8698	1			Black
	5500 8696	1			Medium Blue
	5501 3232	1			Cordovan
	5500 3530	1			Garnet
	5500 5846	1			Honey
	5501 3230	1			Tan
5	3500 7352	2			COVER, Web Guide
6	J400 7124	2			BOLT
7	J400 7315	2			WASHER
8	J400 5997	2			BOLT
9	J400 5505	2			BOLT
10	5500 2948	1			BAR, Slide
11	5500 2949	1			BAR, Slide

MODEL CODES
16=Cherokee 2 Dr.(1981-83)
17=Cherokee 2 Dr.(1981-83)
73=Cherokee 2WD-2 Dr.(1984-86)
74=Cherokee 2WD-4 Dr.(1984-86)
18=Cherokee 4 Dr.(1981-83)
77=Cherokee 4WD-2 Dr.(1984-86)
78=Cherokee 4WD-4 Dr.(1984-86)
85=CJ-5 (1981-83)
86=CJ-6(1981)
87=CJ-7(1981-86)
88=CJ-8, Scrambler(1981-86)
64=Comanche 2WD-6 Ft. Box(1986)
66=Comanche 2WD-7 Ft. Box(1986)
63=Comanche 4WD-6 Ft. Box(1986)
65=Comanche 4WD-7 Ft. Box(1986)
15=Grand Wagoneer 4 Dr.(1984-86)
25=J-10 Truck 7 Ft. Box(1981-84)
26=J10 Truck 8 Ft. Box(1981-86)
27=J-20 Truck 8 Ft. Box(1981-86)
15=Wagoneer 4 Dr.(1981-83)
75=Wagoneer 4WD-4 Dr.(1984-86)

BODY
CJ=CJ-5, CJ-6, CJ-7, CJ-8, Scrambler(1981-86)
MJ=Comanche Pickup(1986)

STYLES
SJ=Wagoneer(1981-83), Grand Wagoneer(1984-86), Cherokee(1981-83), J-10, J-20(1981-86)
XJ=Wagoneer(1984-86), Cherokee(1984-86)

AR = Use as Required - = Non Illustrated Part P.A.R. = Paint as Required

« RETURN TO GROUP INDEX

SEAT BELTS, FRONT, FOUR DOOR WAGON W/O ECE, 1986 XJ CHEROKEE, XJ WAGONEER
Figure 47-4400

81J 047 4400

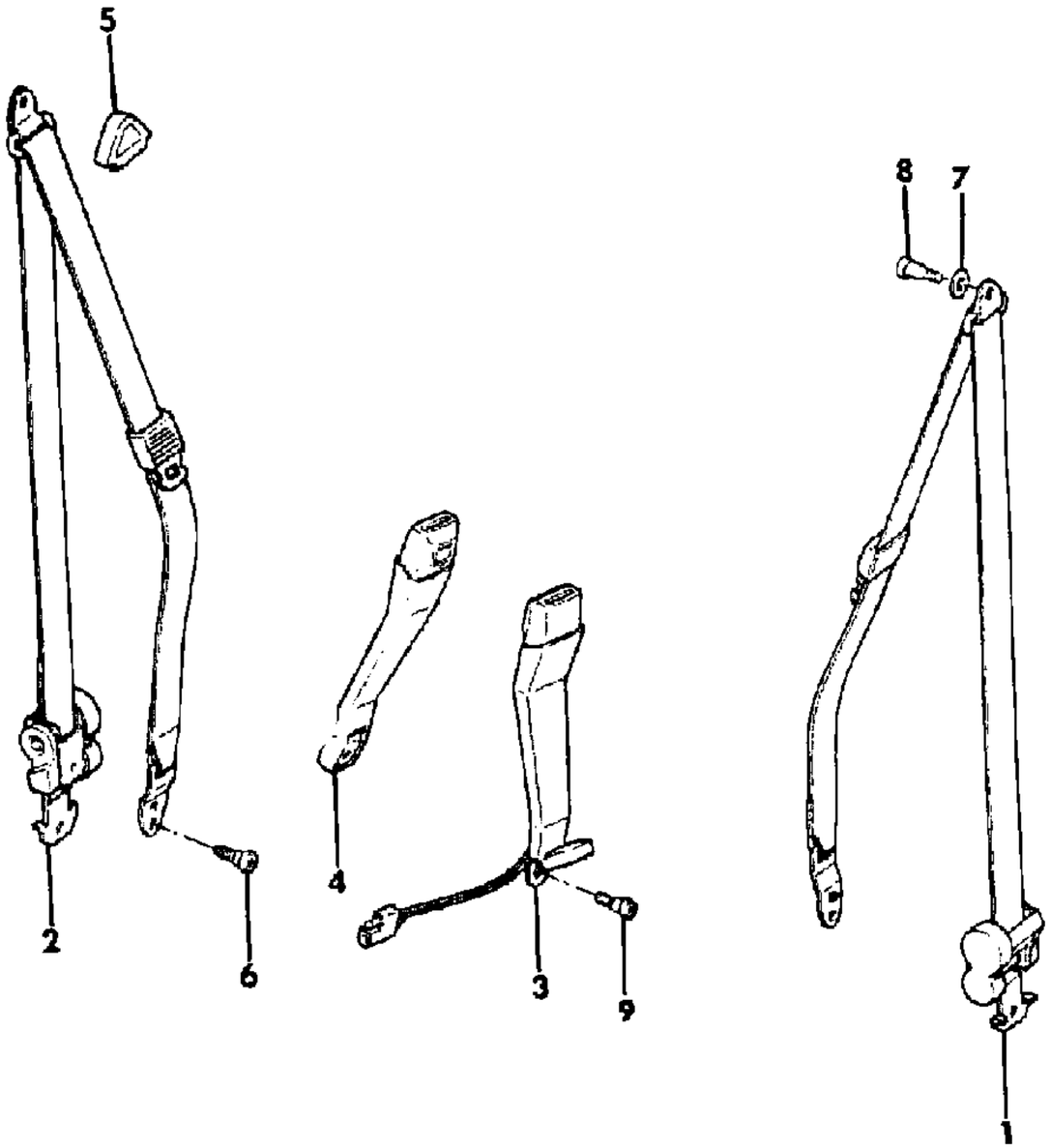

ITEM	PART NUMBER	QTY	BODY	MODEL	DESCRIPTION
1					BELT, Seat
	5500 8689	1			Black
	5500 8687	1			Medium Blue
	5501 3003	1			Cordovan
	5500 3515	1			Garnet
	5500 5843	1			Honey
	5501 3001	1			Tan
2					BELT, Seat
	5500 8688	1			Black
	5500 8686	1			Medium Blue
	5501 3002	1			Cordovan
	5500 3514	1			Garnet
	5500 5842	1			Honey
	5501 3000	1			Tan
3					BELT, Seat
	5500 8699	1			Black
	5500 8697	1			Medium Blue
	5501 5067	1			Cordovan
	5500 3531	1			Garnet
	5500 5847	1			Honey
	5501 5065	1			Tan
4					BELT, Seat
	5500 8698	1			Black
	5500 8696	1			Medium Blue
	5501 3232	1			Cordovan
	5500 3530	1			Garnet
	5500 5846	1			Honey
	5501 3230	1			Tan
5	3500 7352	2			COVER, Web Guide
6	J400 5505	2			BOLT
7	J400 7315	2			WASHER
8	J400 7124	2			BOLT
9	J400 5997	2			BOLT

MODEL CODES
16=Cherokee 2 Dr.(1981-83)
17=Cherokee 2 Dr.(1981-83)
73=Cherokee 2WD-2 Dr.(1984-86)
74=Cherokee 2WD-4 Dr.(1984-86)
18=Cherokee 4 Dr.(1981-83)
77=Cherokee 4WD-2 Dr.(1984-86)
78=Cherokee 4WD-4 Dr.(1984-86)
85=CJ-5 (1981-83)
86=CJ-6(1981)
87=CJ-7(1981-86)
88=CJ-8, Scrambler(1981-86)
64=Comanche 2WD-6 Ft. Box(1986)
66=Comanche 2WD-7 Ft. Box(1986)
63=Comanche 4WD-6 Ft. Box(1986)
65=Comanche 4WD-7 Ft. Box(1986)
15=Grand Wagoneer 4 Dr.(1984-86)
25=J-10 Truck 7 Ft. Box(1981-84)
26=J10 Truck 8 Ft. Box(1981-86)
27=J-20 Truck 8 Ft. Box(1981-86)
15=Wagoneer 4 Dr.(1981-83)
75=Wagoneer 4WD-4 Dr.(1984-86)

BODY
CJ=CJ-5, CJ-6, CJ-7, CJ-8, Scrambler(1981-86)
MJ=Comanche Pickup(1986)

STYLES
SJ=Wagoneer(1981-83), Grand Wagoneer(1984-86), Cherokee(1981-83), J-10, J-20(1981-86)
XJ=Wagoneer(1984-86), Cherokee(1984-86)

AR = Use as Required - = Non Illustrated Part P.A.R. = Paint as Required

« RETURN TO GROUP INDEX

SEAT BELTS, FRONT ECONOMIC COMMSSION OF EUROPE XJ CHEROKEE, XJ WAGONEER
Figure 47-4500

81J 047 4500

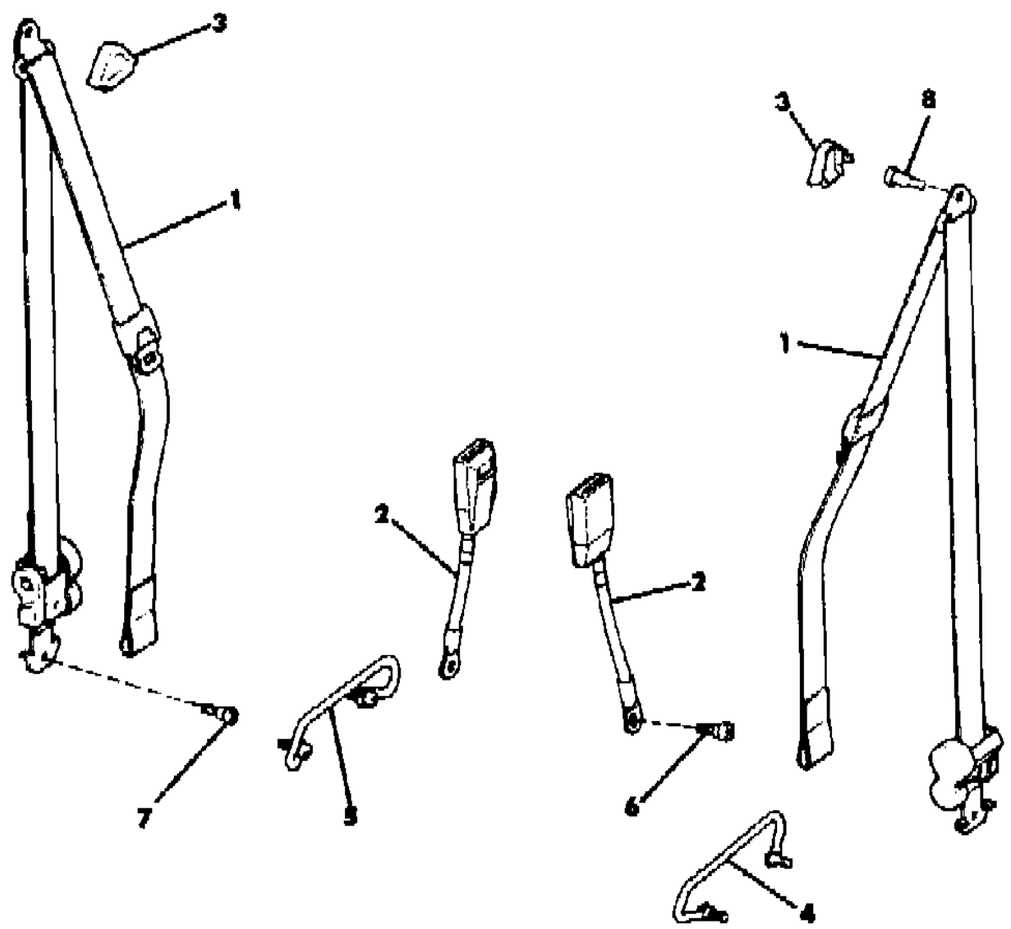

ITEM	PART NUMBER	QTY	BODY	MODEL	DESCRIPTION
1					BELT, Seat
					RIGHT
	5500 5530	1			Black, Two Door
	5500 5572	1			Black, Four Door
	5500 5582	1			Oatmeal, Two Door
	5500 5574	1			Oatmeal, Four Door
					LEFT
	5500 5580	1			Black, Two Door
	5500 5573	1			Black, Four Door
	5500 5582	1			Oatmeal, Two Door
	5500 5575	1			Oatmeal, Four Door
2	5500 5588	2			BELT, Seat
3					COVER, Web Guide
	5500 3382	2			Almond, 1984-85
	5500 3381	2			Slate Blue, 1984-85
	5500 3383	2			Garnet, 1984-85
	3500 7352	2			Honey, 1984-85
	3500 7352	2			1986
4	5500 2949	1			BAR, Slide, Two Door
5	5500 2948	1			BAR, Slide, Two Door
6	J400 5997	2			BOLT
7	J400 5505	2			BOLT
8					BOLT
	J400 7124	2			Two Door
	J400 5997	2			Four Door

MODEL CODES

16=Cherokee 2 Dr.(1981-83)	78=Cherokee 4WD-4 Dr.(1984-86)	64=Comanche 2WD-6 Ft. Box(1986)	25=J-10 Truck 7 Ft. Box(1981-84)
17=Cherokee 2 Dr.(1981-83)	85=CJ-5 (1981-83)	66=Comanche 2WD-7 Ft. Box(1986)	26=J10 Truck 8 Ft. Box(1981-86)
73=Cherokee 2WD-2 Dr.(1984-86)	86=CJ-6(1981)	63=Comanche 4WD-6 Ft. Box(1986)	27=J-20 Truck 8 Ft. Box(1981-86)
74=Cherokee 2WD-4 Dr.(1984-86)	87=CJ-7(1981-86)	65=Comanche 4WD-7 Ft. Box(1986)	15=Wagoneer 4 Dr.(1981-83)
18=Cherokee 4 Dr.(1981-83)	88=CJ-8, Scrambler(1981-86)	15=Grand Wagoneer 4 Dr.(1984-86)	75=Wagoneer 4WD-4 Dr.(1984-86)
77=Cherokee 4WD-2 Dr.(1984-86)			

BODY
CJ=CJ-5, CJ-6, CJ-7, CJ-8, Scrambler(1981-86)
MJ=Comanche Pickup(1986)

STYLES
SJ=Wagoneer(1981-83), Grand Wagoneer(1984-86), Cherokee(1981-83), J-10, J-20(1981-86)
XJ=Wagoneer(1984-86), Cherokee(1984-86)

AR = Use as Required - = Non Illustrated Part P.A.R. = Paint as Required

« RETURN TO GROUP INDEX

SEAT BELTS, FRONT COMANCHE
Figure 47-4600

81J 047 4600

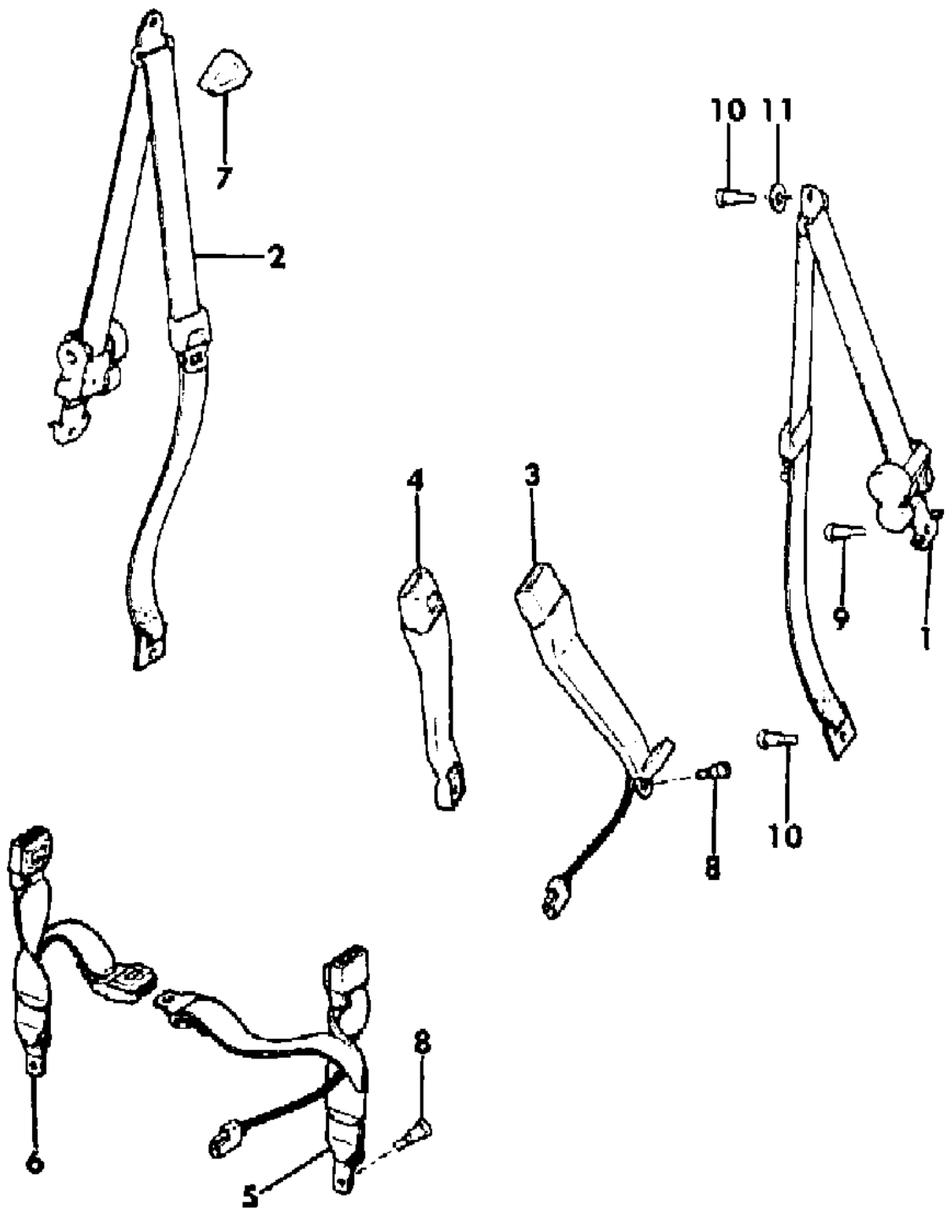

ITEM	PART NUMBER	QTY	BODY	MODEL	DESCRIPTION
1					BELT, Seat
	5500 6399	1			Black
	5500 6397	1			Medium Blue
	5501 3279	1			Cordovan
	5500 6401	1			Garnet
	5500 6403	1			Honey
	5501 3277	1			Tan
2					BELT, Seat
	5500 6398	1			Black
	5500 6396	1			Medium Blue
	5501 3278	1			Cordovan
	5500 6400	1			Garnet
	5500 6402	1			Honey
	5501 3276	1			Tan
3					BELT, Seat
	5500 8699	1			Black
	5500 8697	1			Medium Blue
	5501 5067	1			Cordovan
	5500 3531	1			Garnet
	5500 5847	1			Honey
	5501 5065	1			Tan
4					BELT, Seat
	5500 8698	1			Black
	5500 8696	1			Medium Blue
	5501 3232	1			Cordovan
	5500 3530	1			Garnet
	5500 5846	1			Honey
	5501 3230	1			Tan
5					BELT, Seat
	5500 9761	1			Black
	5500 9759	1			Medium Blue
	5501 5075	1			Cordovan
	5500 9763	1			Garnet
	5500 9765	1			Honey
	5501 5073	1			Tan
6					BELT, Seat
	5500 9762	1			Black
	5500 9760	1			Medium Blue
	5501 3286	1			Cordovan

MODEL CODES
16=Cherokee 2 Dr.(1981-83)
17=Cherokee 2 Dr.(1981-83)
73=Cherokee 2WD-2 Dr.(1984-86)
74=Cherokee 2WD-4 Dr.(1984-86)
18=Cherokee 4 Dr.(1981-83)
77=Cherokee 4WD-2 Dr.(1984-86)
78=Cherokee 4WD-4 Dr.(1984-86)
85=CJ-5 (1981-83)
86=CJ-6(1981)
87=CJ-7(1981-86)
88=CJ-8, Scrambler(1981-86)
64=Comanche 2WD-6 Ft. Box(1986)
66=Comanche 2WD-7 Ft. Box(1986)
63=Comanche 4WD-6 Ft. Box(1986)
65=Comanche 4WD-7 Ft. Box(1986)
15=Grand Wagoneer 4 Dr.(1984-86)
25=J-10 Truck 7 Ft. Box(1981-84)
26=J10 Truck 8 Ft. Box(1981-86)
27=J-20 Truck 8 Ft. Box(1981-86)
15=Wagoneer 4 Dr.(1981-83)
75=Wagoneer 4WD-4 Dr.(1984-86)

BODY
CJ=CJ-5, CJ-6, CJ-7, CJ-8, Scrambler(1981-86)
MJ=Comanche Pickup(1986)

STYLES
SJ=Wagoneer(1981-83), Grand Wagoneer(1984-86), Cherokee(1981-83), J-10, J-20(1981-86)
XJ=Wagoneer(1984-86), Cherokee(1984-86)

AR = Use as Required - = Non Illustrated Part P.A.R. = Paint as Required

« RETURN TO GROUP INDEX »

SEAT BELTS, FRONT COMANCHE
Figure 47-4600

81J 047 4600

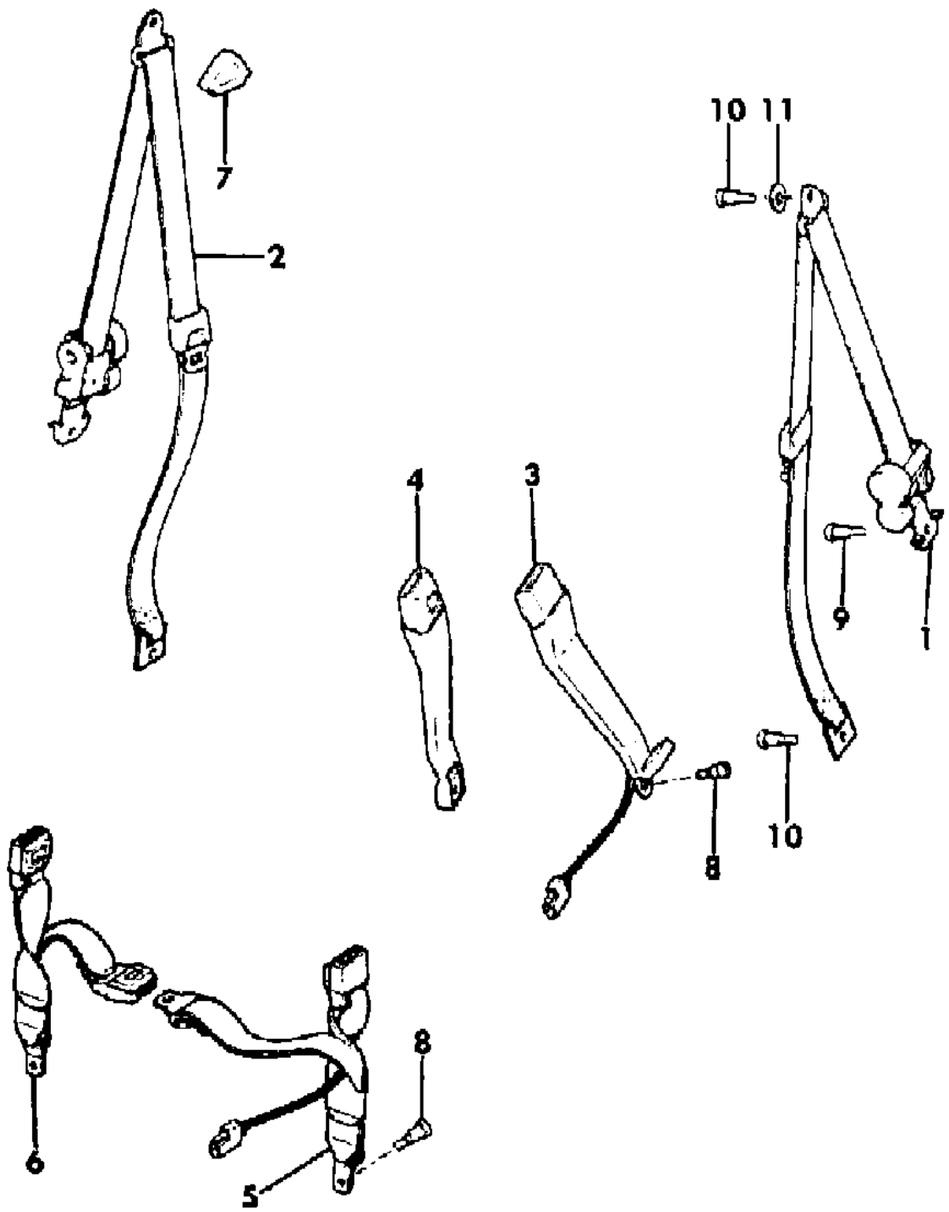

ITEM	PART NUMBER	QTY	BODY	MODEL	DESCRIPTION
	5500 9764	1			Garnet
	5500 9766	1			Honey
	5501 3284	1			Tan
7	3500 7352	2			COVER, Web Guide
8	J400 5997	2			BOLT
9	J400 5505	2			BOLT
10	J400 5507	4			BOLT
11	J400 7315	2			WASHER

MODEL CODES

16=Cherokee 2 Dr.(1981-83)
17=Cherokee 2 Dr.(1981-83)
73=Cherokee 2WD-2 Dr.(1984-86)
74=Cherokee 2WD-4 Dr.(1984-86)
18=Cherokee 4 Dr.(1981-83)
77=Cherokee 4WD-2 Dr.(1984-86)
78=Cherokee 4WD-4 Dr.(1984-86)
85=CJ-5 (1981-83)
86=CJ-6(1981)
87=CJ-7(1981-86)
88=CJ-8, Scrambler(1981-86)
64=Comanche 2WD-6 Ft. Box(1986)
66=Comanche 2WD-7 Ft. Box(1986)
63=Comanche 4WD-6 Ft. Box(1986)
65=Comanche 4WD-7 Ft. Box(1986)
15=Grand Wagoneer 4 Dr.(1984-86)
25=J-10 Truck 7 Ft. Box(1981-84)
26=J10 Truck 8 Ft. Box(1981-86)
27=J-20 Truck 8 Ft. Box(1981-86)
15=Wagoneer 4 Dr.(1981-83)
75=Wagoneer 4WD-4 Dr.(1984-86)

BODY
CJ=CJ-5, CJ-6, CJ-7, CJ-8, Scrambler(1981-86)
MJ=Comanche Pickup(1986)

STYLES
SJ=Wagoneer(1981-83), Grand Wagoneer(1984-86), Cherokee(1981-83), J-10, J-20(1981-86)
XJ=Wagoneer(1984-86), Cherokee(1984-86)

AR = Use as Required - = Non Illustrated Part P.A.R. = Paint as Required

« RETURN TO GROUP INDEX

SEAT BELTS, REAR W/O ECE XJ CHEROKEE, XJ WAGONEER
Figure 47-4700

81J 047 4700

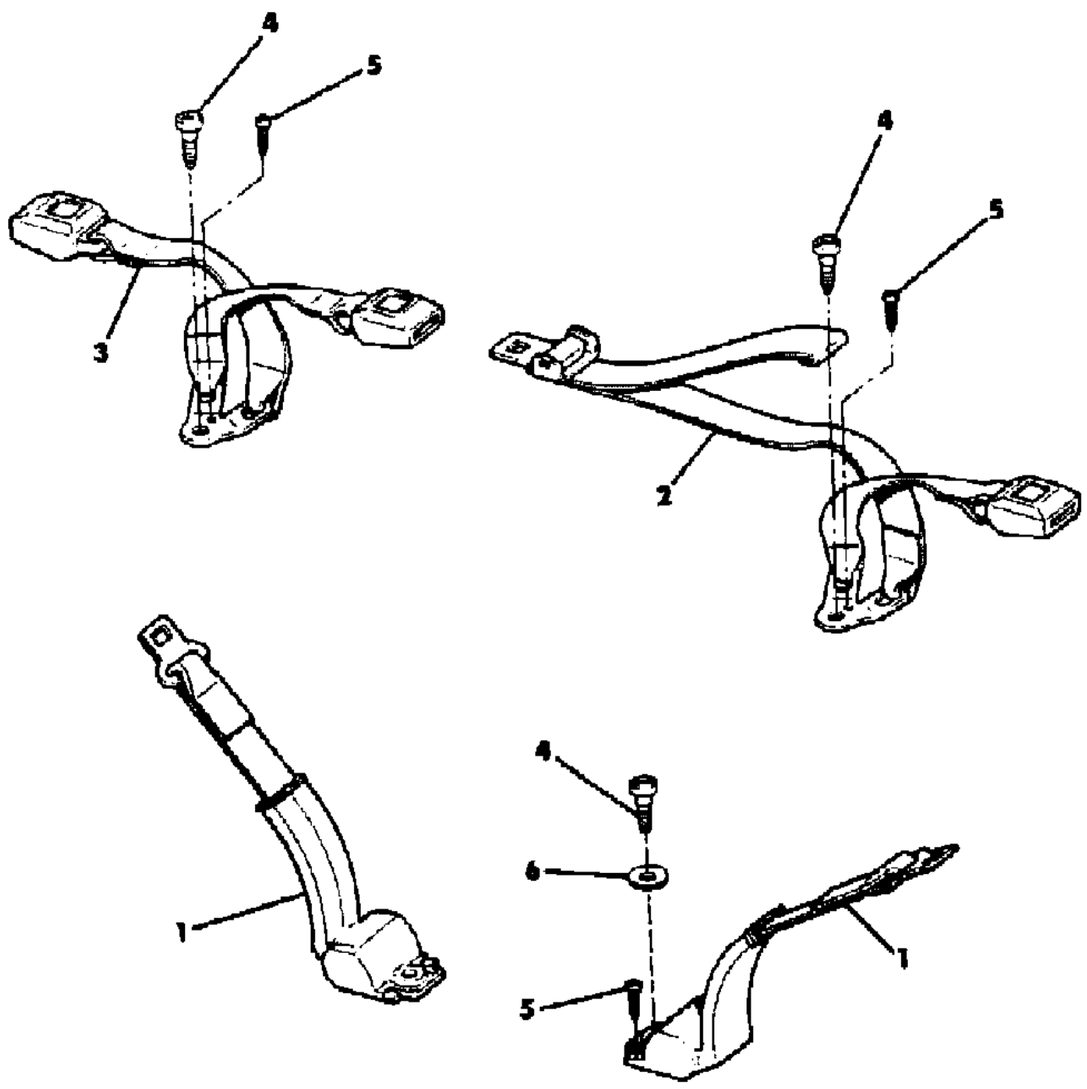

ITEM	PART NUMBER	QTY	BODY	MODEL	DESCRIPTION
1					BELT, Seat
	5500 3059	2			Almond, 1984-85
	5500 8679	2			Black, 1986
	5500 8678	2			Medium Blue, 1984-86
	5500 3058	2			Slate Blue, 1984-85
	5501 3022	2			Cordovan, 1986
	5500 3060	2			Garnet, 1984-86
	5500 5838	2			Honey, 1984-86
	5500 3061	2			Nutmeg, 1984-85
	5501 3020	2			Tan, 1986
2					BELT, Seat
	5500 3064	1			Almond, 1984-85
	5500 8684	1			Black, 1986
	5500 8682	1			Medium Blue, 1984-86
	5500 3062	1			Slate Blue, 1984-85
	5501 3033	1			Cordovan, 1986
	5500 3066	1			Garnet, 1984-86
	5500 5840	1			Honey, 1984-86
	5500 3068	1			Nutmeg, 1984-86
	5501 3031	1			Tan, 1986
3					BELT, Seat
	5500 3065	1			Almond, 1984-85
	5500 8685	1			Black, 1986
	5500 8683	1			Medium Blue, 1984-86
	5500 3063	1			Slate Blue, 1984-85
	5501 3032	1			Cordovan, 1986
	5500 3067	1			Garnet, 1984-86
	5500 5841	1			Honey, 1984-86
	5500 3069	1			Nutmeg, 1984-85
	5501 3030	1			Tan, 1986
4	J400 5505	4			BOLT
5	5150 0063	4			SCREW
6	J400 2057	4			WASHER

MODEL CODES

16=Cherokee 2 Dr.(1981-83)	78=Cherokee 4WD-4 Dr.(1984-86)	64=Comanche 2WD-6 Ft. Box(1986)	25=J-10 Truck 7 Ft. Box(1981-84)
17=Cherokee 2 Dr.(1981-83)	85=CJ-5 (1981-83)	66=Comanche 2WD-7 Ft. Box(1986)	26=J10 Truck 8 Ft. Box(1981-86)
73=Cherokee 2WD-2 Dr.(1984-86)	86=CJ-6(1981)	63=Comanche 4WD-6 Ft. Box(1986)	27=J-20 Truck 8 Ft. Box(1981-86)
74=Cherokee 2WD-4 Dr.(1984-86)	87=CJ-7(1981-86)	65=Comanche 4WD-7 Ft. Box(1986)	15=Wagoneer 4 Dr.(1981-83)
18=Cherokee 4 Dr.(1981-83)	88=CJ-8, Scrambler(1981-86)	15=Grand Wagoneer 4 Dr.(1984-86)	75=Wagoneer 4WD-4 Dr.(1984-86)
77=Cherokee 4WD-2 Dr.(1984-86)			

BODY
CJ=CJ-5, CJ-6, CJ-7, CJ-8, Scrambler(1981-86)
MJ=Comanche Pickup(1986)

STYLES
SJ=Wagoneer(1981-83), Grand Wagoneer(1984-86), Cherokee(1981-83), J-10, J-20(1981-86)
XJ=Wagoneer(1984-86), Cherokee(1984-86)

AR = Use as Required - = Non Illustrated Part P.A.R. = Paint as Required

« RETURN TO GROUP INDEX

SEAT BELTS, REAR ECONOMIC COMMISSION OF EUROPE XJ CHEROKEE, XJ WAGONEER
Figure 47-4800

81J 047 4800

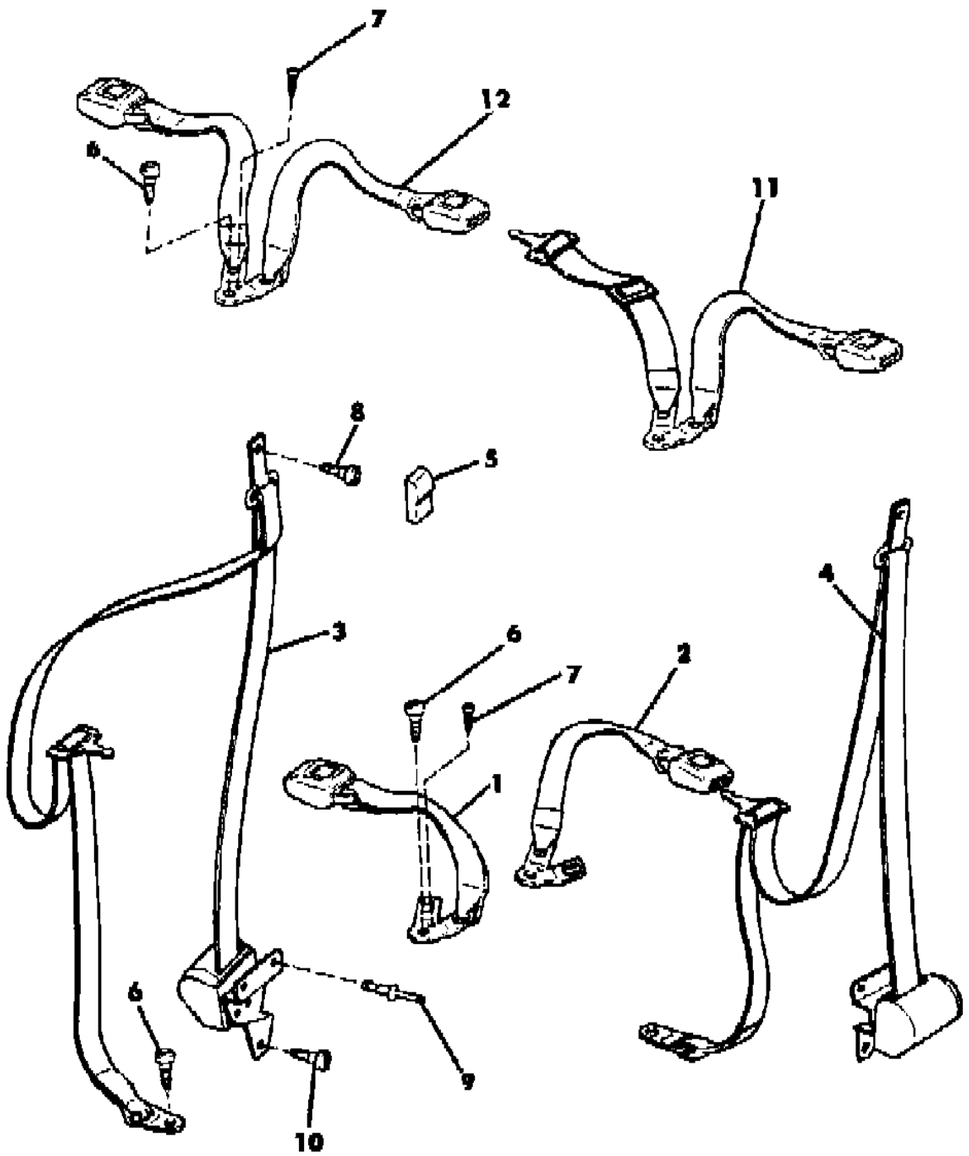

ITEM	PART NUMBER	QTY	BODY	MODEL	DESCRIPTION
1					BELT, Seat
	5500 8388	1			Black
	5500 8390	1			Oatmeal
2					BELT, Seat
	5500 8387	1			Black
	5500 8389	1			Oatmeal
3					BELT, Seat
	5500 7098	1			Black
	5500 7100	1			Oatmeal
4					BELT, Seat
	5500 7099	1			Black
	5500 7101	1			Oatmeal
5					COVER, Web Guide
	5500 9069	2			Almond, 1984-85
	5500 9068	2			Slate Blue, 1984-85
	5500 9070	2			Garnet, 1984-85
	5500 9071	2			Honey, 1984-85
	5500 9069	2			1986
6	J400 5505	4			BOLT
7	5150 0063	2			SCREW
8	J400 7124	2			BOLT
9	3420 1557	4			RIVET
10	J941 9293	2			BOLT
11	5501 8469	1			BELT, Seat
12	5501 8468	1			BELT, Seat

MODEL CODES
16=Cherokee 2 Dr.(1981-83)
17=Cherokee 2 Dr.(1981-83)
73=Cherokee 2WD-2 Dr.(1984-86)
74=Cherokee 2WD-4 Dr.(1984-86)
18=Cherokee 4 Dr.(1981-83)
77=Cherokee 4WD-2 Dr.(1984-86)
78=Cherokee 4WD-4 Dr.(1984-86)
85=CJ-5 (1981-83)
86=CJ-6(1981)
87=CJ-7(1981-86)
88=CJ-8, Scrambler(1981-86)
64=Comanche 2WD-6 Ft. Box(1986)
66=Comanche 2WD-7 Ft. Box(1986)
63=Comanche 4WD-6 Ft. Box(1986)
65=Comanche 4WD-7 Ft. Box(1986)
15=Grand Wagoneer 4 Dr.(1984-86)
25=J-10 Truck 7 Ft. Box(1981-84)
26=J10 Truck 8 Ft. Box(1981-86)
27=J-20 Truck 8 Ft. Box(1981-86)
15=Wagoneer 4 Dr.(1981-83)
75=Wagoneer 4WD-4 Dr.(1984-86)

BODY
CJ=CJ-5, CJ-6, CJ-7, CJ-8, Scrambler(1981-86)
MJ=Comanche Pickup(1986)

STYLES
SJ=Wagoneer(1981-83), Grand Wagoneer(1984-86), Cherokee(1981-83), J-10, J-20(1981-86)
XJ=Wagoneer(1984-86), Cherokee(1984-86)

AR = Use as Required - = Non Illustrated Part P.A.R. = Paint as Required

« RETURN TO GROUP INDEX

COVER, CARGO XJ CHEROKEE, XJ WAGONEER
Figure 47-4900

81J 047 4900

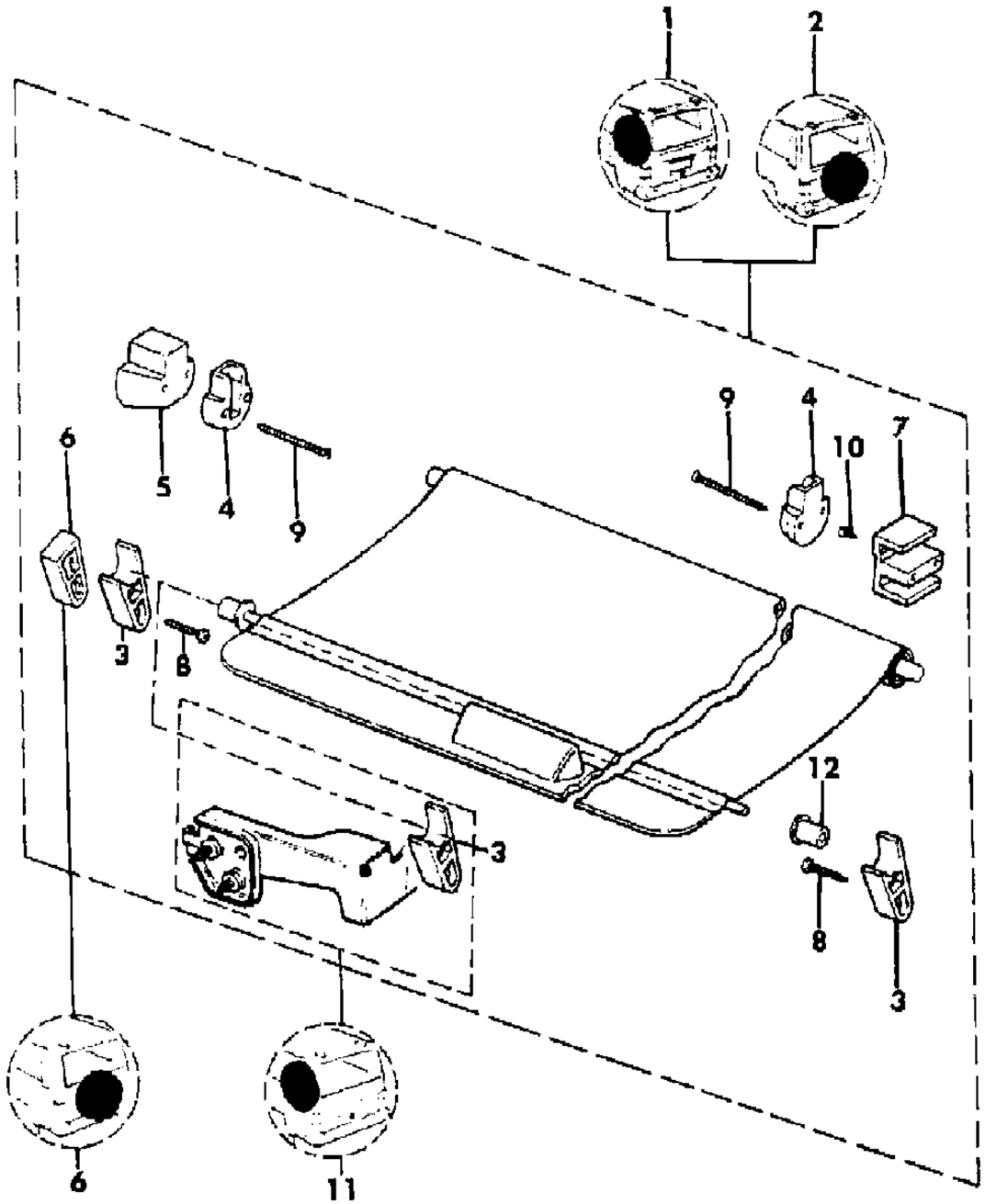

ITEM	PART NUMBER	QTY	BODY	MODEL	DESCRIPTION
1					COVER, Cargo, Inside Mounted Tire
	8220 0129	1			Almond, 1984-85
	8220 0399	1			Black, 1986
	8220 0400	1			Medium Blue, 1984-86
	8220 0123	1			Slate Blue, 1984-85
	8220 0567	1			Cordovan, 1986
	8220 0130	1			Garnet, 1984-86
	8220 0239	1			Honey, 19984-86
	8220 0131	1			Nutmeg, 1984-85
	8220 0568	1			Tan, 1986
2					COVER, Cargo, Outside Mounted Tire
	8220 0133	1			Almond, 1984-85
	8220 0401	1			Black, 1986
	8220 0402	1			Medium Blue, 1984-86
	8220 0132	1			Slate Blue, 1984-85
	8220 0569	1			Cordovan, 1986
	8220 0134	1			Garnet, 1984-86
	8220 0240	1			Honey, 1984-86
	8220 0135	1			Nutmeg, 1984-85
	8220 0570	1			Tan, 1986
3	3500 4944	1			BRACKET, Cover
4	J575 6611	2			BRACKET, Cover
5	5500 5633	1			SPACER
6	5500 5629	1			SPACER
7	5500 5522	1			SPACER
8	3420 1967	4			SCREW
9	3420 1951	4			SCREW
10	3420 1298	1			SCREW
11	5500 7320	1			BRACKET
12	8350 0432	2			CAP, End

MODEL CODES

16=Cherokee 2 Dr.(1981-83)	78=Cherokee 4WD-4 Dr.(1984-86)	64=Comanche 2WD-6 Ft. Box(1986)	25=J-10 Truck 7 Ft. Box(1981-84)
17=Cherokee 2 Dr.(1981-83)	85=CJ-5 (1981-83)	66=Comanche 2WD-7 Ft. Box(1986)	26=J10 Truck 8 Ft. Box(1981-86)
73=Cherokee 2WD-2 Dr.(1984-86)	86=CJ-6(1981)	63=Comanche 4WD-6 Ft. Box(1986)	27=J-20 Truck 8 Ft. Box(1981-86)
74=Cherokee 2WD-4 Dr.(1984-86)	87=CJ-7(1981-86)	65=Comanche 4WD-7 Ft. Box(1986)	15=Wagoneer 4 Dr.(1981-83)
18=Cherokee 4 Dr.(1981-83)	88=CJ-8, Scrambler(1981-86)	15=Grand Wagoneer 4 Dr.(1984-86)	75=Wagoneer 4WD-4 Dr.(1984-86)
77=Cherokee 4WD-2 Dr.(1984-86)			

BODY
CJ=CJ-5, CJ-6, CJ-7, CJ-8, Scrambler(1981-86)
MJ=Comanche Pickup(1986)

STYLES
SJ=Wagoneer(1981-83), Grand Wagoneer(1984-86), Cherokee(1981-83), J-10, J-20(1981-86)
XJ=Wagoneer(1984-86), Cherokee(1984-86)

AR = Use as Required - = Non Illustrated Part P.A.R. = Paint as Required

« RETURN TO GROUP INDEX

ILLUSTRATION NOT AVAILABLE AT TIME OF PUBLICATION

GROUP 48 - SJ CHEROKEE, SJ WAGONEER, J10, J20 INTERIOR TRIM

ILLUSTRATION TITLE	GROUP-FIG. NO.
INSULATION SJ CHEROKEE, SJ WAGONEER, J10, J20	Fig. 48-100
HEADLINING AND VINYL ROOF COVER WITH SLIDING SUNROOF SJ WAGONEER	Fig. 48-200
HEADLINING AND UPPER TRIM MOULDINGS WITHOUT SLIDING SUNROOF SJ CHEROKEE, SJ WAGONEER	Fig. 48-300
HEADLINING AND UPPER TRIM MOULDINGS J10, J20	Fig. 48-400
SUNVISORS AND VANITY MIRROR SJ CHEROKEE, SJ WAGONEER, J10, J20	Fig. 48-500
PANELS, INTERIOR TRIM 2 DOOR WAGON SJ CHEROKEE	Fig. 48-600
PANELS, INTERIOR TRIM 4 DOOR WAGON SJ CHEROKEE, SJ WAGONEER	Fig. 48-700
CARPETS AND MATS SJ CHEROKEE, SJ WAGONEER, J10, J20	Fig. 48-800
CARPETS AND MATS J10, J20	Fig. 48-900
PANELS, DOOR TRIM 2 DOOR SJ CHEROKEE	Fig. 48-1000
PANELS, DOOR TRIM 4 DOOR WAGON SJ CHEROKEE	Fig. 48-1100
PANELS, DOOR TRIM 4 DOOR WAGON SJ WAGONEER	Fig. 48-1200
PANELS, DOOR TRIM J10, J20	Fig. 48-1300
INTERIOR TRIM PARTS, DOOR SJ CHEROKEE, SJ WAGONEER, J10, J20	Fig. 48-1400
FRAME, PAD, AND COVERS FRONT SEAT CENTER CUSHION AND ARMREST SJ CHEROKEE, SJ WAGONEER	Fig. 48-1500
FRAME AND PAD FRONT BENCH SEAT, LEFT HAND DRIVE SJ CHEROKEE, SJ WAGONEER	Fig. 48-1600
COVERS, UPHOLSTERY FRONT BENCH SEAT SJ CHEROKEE, SJ WAGONEER	Fig. 48-1700
FRAME AND PAD FRONT BENCH SEAT TRUCK, RIGHT HAND DRIVE WAGON SJ CHEROKEE, SJ WAGONEER, J10, J20	Fig. 48-1800
COVERS, UPHOLSTERY FRONT BENCH SEAT J10, J20	Fig. 48-1900
FRAME AND PAD FRONT BUCKET SEATS, FOLDING BACK SJ CHEROKEE	Fig. 48-2000
COVERS, UPHOLSTERY WITH FRONT BUCKET SEATS, 2 DOOR SJ CHEROKEE	Fig. 48-2100
FRAME AND PAD FRONT BUCKET SEAT, FIXED LOW BACK SJ CHEROKEE, SJ WAGONEER	Fig. 48-2200
COVERS, UPHOLSTERY WITH FRONT BUCKET SEATS SJ CHEROKEE	Fig. 48-2300
COVERS, UPHOLSTERY WITH FRONT BUCKET SEATS, FOUR DOOR SJ WAGONEER	Fig. 48-2400
FRAME AND PAD FRONT BUCKET SEAT, FIXED HIGH BACK J10, J20	Fig. 48-2500
COVERS, UPHOLSTERY FRONT BUCKET SEATS J10, J20	Fig. 48-2600
FRAME AND PAD REAR SEAT WAGON SJ CHEROKEE, SJ WAGONEER	Fig. 48-2700
TRACKS, WITHOUT POWER SEATS FRONT BENCH SEAT SJ CHEROKEE, SJ WAGONEER, J10, J20	Fig. 48-2800
TRACKS, WITHOUT POWER SEATS FRONT BUCKET SEAT SJ CHEROKEE, SJ WAGONEER, J10, J20	Fig. 48-2900
TRACKS, WITH POWER SEATS FRONT BUCKET SEAT SJ CHEROKEE, SJ WAGONEER	Fig. 48-3000
SEATBELTS, FRONT AND REAR SJ CHEROKEE, SJ WAGONEER, J10, J20	Fig. 48-3100
CARGO COVER SJ CHEROKEE, SJ WAGONEER	Fig. 48-3200

INSULATION SJ CHEROKEE, SJ WAGONEER, J10, J20
Figure 48-100

81J 048 100

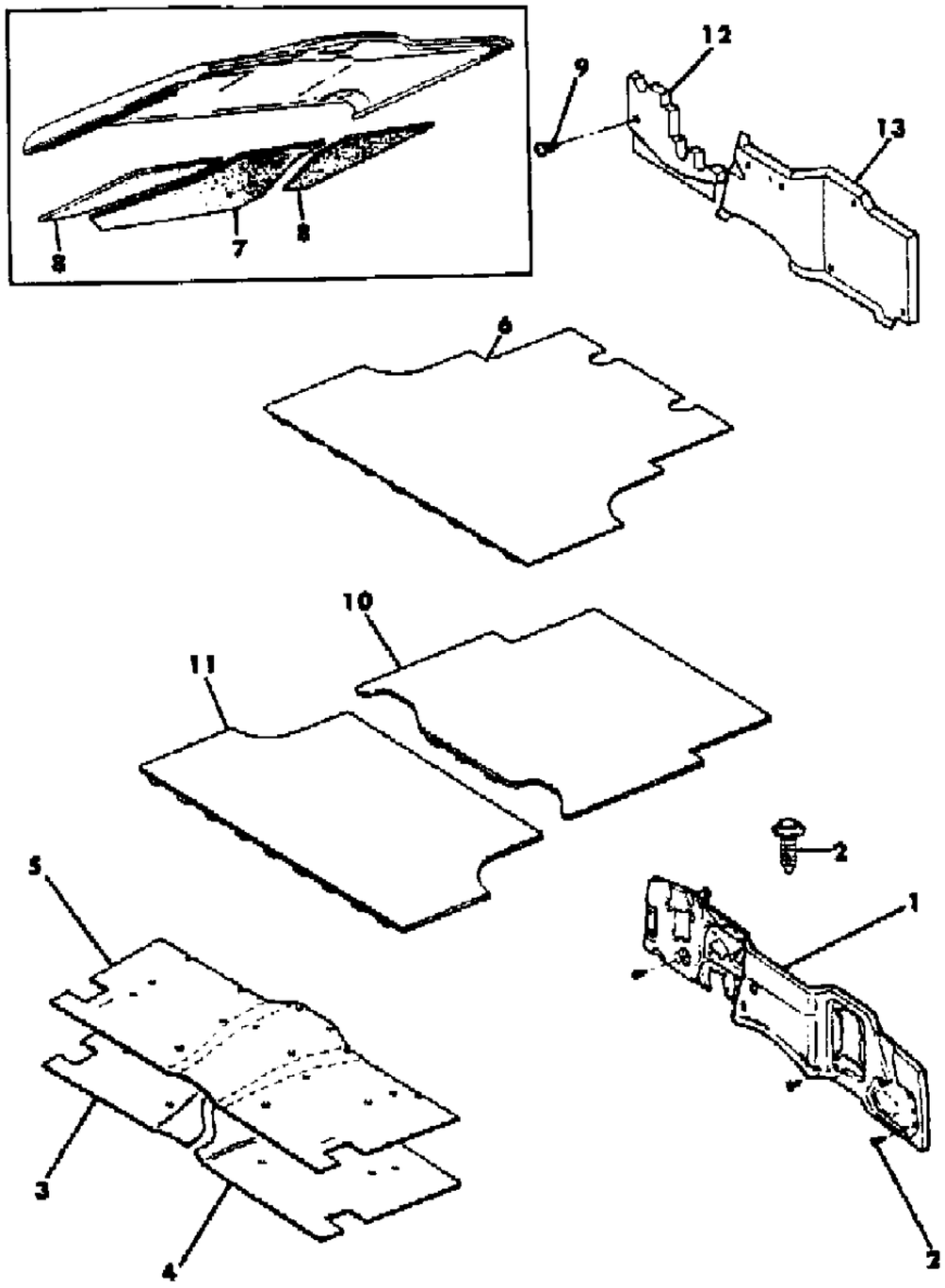

ITEM	PART NUMBER	QTY	BODY	MODEL	DESCRIPTION
1					INSULATION, Dash
	J546 9576	1			1981: Limited
	J575 0452	1			1981: Without Limited, without Factory Air Conditioning
	J575 0451	1			1981: Without Limited, with Factory Air Conditioning
	J576 0466	1			1982-83
	J576 4337	1			1984-86
2	J400 1934	7			FASTENER
3	J545 8803	1		25,26,2	INSULATION, Floor
4	J545 8804	1		25,26,2	INSULATION, Floor
5	J545 8805	1		25,26,2	INSULATION, Floor
6	5501 1510	1		15,16,1	INSULATION, Cargo
7	J546 0143	1			INSULATION, Hood Center
8	J546 0166	2			INSULATION, Hood End
9					SCREW
	J097 4764	2			.50"
	J400 3095	2			.75"
10	J575 4920	1		15,16,1	INSULATION, Cargo
11	J575 4918	1		15,16,1	INSULATION, Cargo
12					INSULATION, Dash
	J546 4251	1			1981: Without Limited, without Extra Quiet Insulation
13					INSULATION, Dash
	J546 3766	1			1981: Without Limited, without Extra Quiet Insulation

MODEL CODES

16=Cherokee 2 Dr.(1981-83)	78=Cherokee 4WD-4 Dr.(1984-86)	64=Comanche 2WD-6 Ft. Box(1986)	25=J-10 Truck 7 Ft. Box(1981-84)
17=Cherokee 2 Dr.(1981-83)	85=CJ-5 (1981-83)	66=Comanche 2WD-7 Ft. Box(1986)	26=J10 Truck 8 Ft. Box(1981-86)
73=Cherokee 2WD-2 Dr.(1984-86)	86=CJ-6(1981)	63=Comanche 4WD-6 Ft. Box(1986)	27=J-20 Truck 8 Ft. Box(1981-86)
74=Cherokee 2WD-4 Dr.(1984-86)	87=CJ-7(1981-86)	65=Comanche 4WD-7 Ft. Box(1986)	15=Wagoneer 4 Dr.(1981-83)
18=Cherokee 4 Dr.(1981-83)	88=CJ-8, Scrambler(1981-86)	15=Grand Wagoneer 4 Dr.(1984-86)	75=Wagoneer 4WD-4 Dr.(1984-86)
77=Cherokee 4WD-2 Dr.(1984-86)			

BODY
CJ=CJ-5, CJ-6, CJ-7, CJ-8, Scrambler(1981-86)
MJ=Comanche Pickup(1986)

STYLES
SJ=Wagoneer(1981-83), Grand Wagoneer(1984-86), Cherokee(1981-83), J-10, J-20(1981-86)
XJ=Wagoneer(1984-86), Cherokee(1984-86)

AR = Use as Required - = Non Illustrated Part P.A.R. = Paint as Required

« RETURN TO GROUP INDEX

HEADLINING AND VINYL ROOF COVER WITH SLIDING SUNROOF SJ WAGONEER
Figure 48-200

81J 048 200

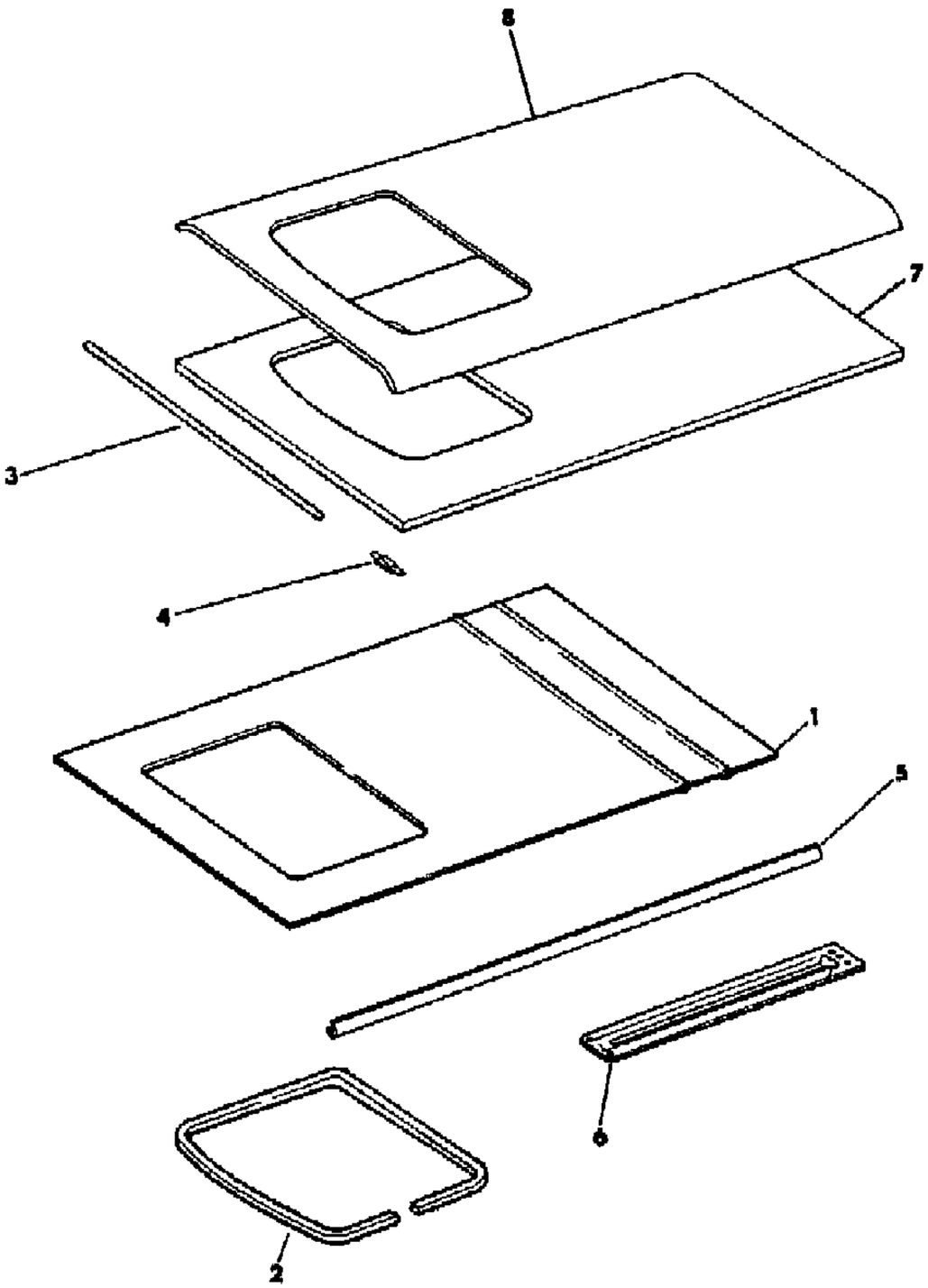

ITEM	PART NUMBER	QTY	BODY	MODEL	DESCRIPTION
1					HEADLINING ***
	8350 1006	1			1984: Almond Beige
	J813 3712	1			1981-83: Beige
	J813 4252	1			1981-84: Black
	8350 2160	1			1985-86: Garnet
	8350 2159	1			1985-86: Honey
	J813 3713	1			1981-84: Nutmeg
2	J813 3205	1			WELT
3	J813 3213	2			WIRE
4	J813 3723	4			CLIP
5					RETAINER
	J813 3214	1			1981-85
	8350 4470	1			1986: Right
	8350 4471	1			1986: Left
6	J813 3216	2			BRACKET
7	J813 3229	1			PAD
8					COVER, Vinyl Roof
	8350 1004	1			1984: Almond Beige
	J813 3225	1			1981: Beige
	J813 4430	1			1982-83: Beige
	8350 2155	1			1985: Beige
	8350 2853	1			1986: Beige
	J813 3223	1			1981-86: Black
	J813 3228	1			1981: Dark Blue
	J813 4254	1			1982: Dark Blue
	J813 3226	1			1981-83: Dark Brown
	J813 4255	1			1982-83: Dark Green
	8351 0187	1			1984: Dark Walnut
	J813 3716	1			1981-84: Deep Maroon
	8350 1005	1			1984: Garnet Metallic
	8350 2156	1			1985-86: Garnet
	J813 4256	1			1982-83: Gold
	J813 3717	1			1981-84: Nutmeg
	J813 4257	1			1982-83: Silver
	8351 0186	1			1984: Silver
	J813 3718	1			1981: Vintage Red
	8351 0188	1			1984: Wheat Metallic
	J813 3220	1			1981-86: White

MODEL CODES
16=Cherokee 2 Dr.(1981-83)
17=Cherokee 2 Dr.(1981-83)
73=Cherokee 2WD-2 Dr.(1984-86)
74=Cherokee 2WD-4 Dr.(1984-86)
18=Cherokee 4 Dr.(1981-83)
77=Cherokee 4WD-2 Dr.(1984-86)
78=Cherokee 4WD-4 Dr.(1984-86)
85=CJ-5 (1981-83)
86=CJ-6(1981)
87=CJ-7(1981-86)
88=CJ-8, Scrambler(1981-86)
64=Comanche 2WD-6 Ft. Box(1986)
66=Comanche 2WD-7 Ft. Box(1986)
63=Comanche 4WD-6 Ft. Box(1986)
65=Comanche 4WD-7 Ft. Box(1986)
15=Grand Wagoneer 4 Dr.(1984-86)
25=J-10 Truck 7 Ft. Box(1981-84)
26=J10 Truck 8 Ft. Box(1981-86)
27=J-20 Truck 8 Ft. Box(1981-86)
15=Wagoneer 4 Dr.(1981-83)
75=Wagoneer 4WD-4 Dr.(1984-86)

BODY
CJ=CJ-5, CJ-6, CJ-7, CJ-8, Scrambler(1981-86)
MJ=Comanche Pickup(1986)

STYLES
SJ=Wagoneer(1981-83), Grand Wagoneer(1984-86), Cherokee(1981-83), J-10, J-20(1981-86)
XJ=Wagoneer(1984-86), Cherokee(1984-86)

AR = Use as Required - = Non Illustrated Part P.A.R. = Paint as Required

« RETURN TO GROUP INDEX

HEADLINING AND UPPER TRIM MOULDINGS WITHOUT SLIDING SUNROOF SJ CHEROKEE, SJ WAGONEER
Figure 48-300

81J 048 300

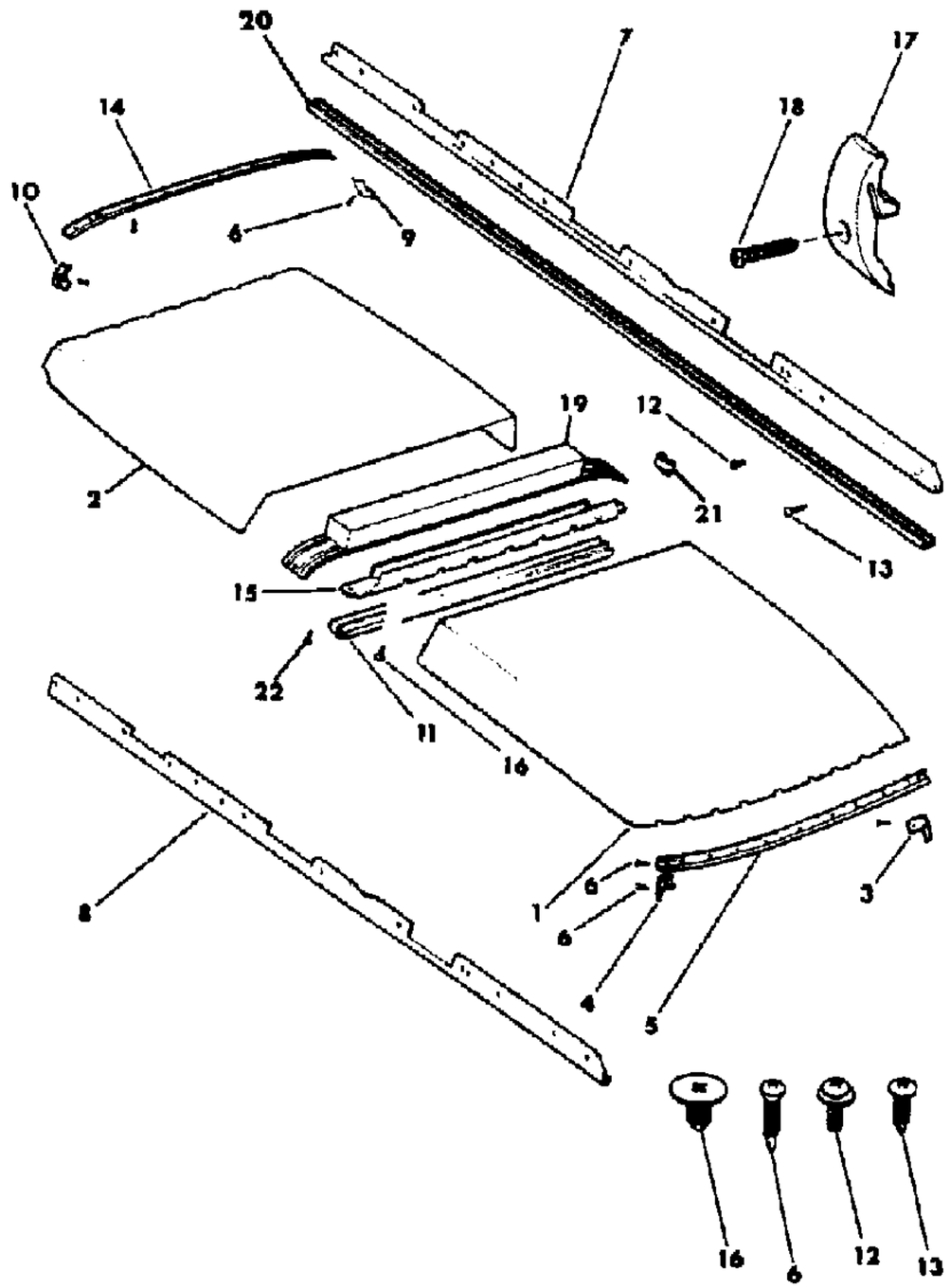

ITEM	PART NUMBER	QTY	BODY	MODEL	DESCRIPTION
1					HEADLINING ***
	J576 5021	1			Almond, without Extra Quiet Insulation
	J576 5036	1			Almond, with Extra Quiet Insulation
	J575 0412	1			Beige, without Extra Quiet Insulation
	J575 0409	1			Light Beige, with Extra Quiet Insulation
	J546 9556	1			Medium Beige, with Extra Quiet Insulation
	J546 9367	1			Black, without Extra Quiet Insulation
	J575 0455	1			Black, with Extra Quiet Insulation
	J546 9371	1			Blue, without Extra Quiet Insulation, 1981
	J576 0080	1			Blue, without Extra Quiet Insulation, 1982
	J575 0456	1			Blue, with Extra Quiet Insulation, 1981
	J576 0094	1			Blue, with Extra Quiet Insulation, 1982
	J576 6077	1			Garnet
	J576 6047	1			Honey, without Extra Quiet Insulation
	J576 6078	1			Honey, with Extra Quiet Insulation
	J575 4954	1			Nutmeg, without Extra Quiet Insulation
	J575 4953	1			Nutmeg, with Extra Quiet Insulation
2					HEADLINING ***
	J576 5022	1			Almond, without Extra Quiet Insulation
	J576 5037	1			Almond, with Extra Quiet Insulation
	J575 0413	1			Beige, without Extra Quiet Insulation
	J575 0411	1			Light Beige, with Extra Quiet Insulation
	J546 9558	1			Medium Beige, with Extra Quiet Insulation
	J546 9381	1			Black, without Extra Quiet Insulation
	J575 0458	1			Black, with Extra Quiet Insulation
	J546 9385	1			Blue, without Extra Quiet Insulation, 1981
	J576 0081	1			Blue, without Extra Quiet Insulation, 1982
	J575 0459	1			Blue, with Extra Quiet Insulation, 1981
	J576 0095	1			Blue, with Extra Quiet Insulation, 1982
	J576 6079	1			Garnet
	J576 6044	1			Honey, without Extra Quiet Insulation
	J576 6080	1			Honey, with Extra Quiet Insulation
	J575 4957	1			Nutmeg, without Extra Quiet Insulation
	J575 4956	1			Nutmeg, with Extra Quiet Insulation
3	J545 3701	1			CAP, Moulding, P.A.R.
4	J545 3702	1			CAP, Moulding, P.A.R.
5	J545 3687	1			MOULDING, Header, P.A.R.
6	J400 4930	22			SCREW
7					MOULDING, Headlining

MODEL CODES

16=Cherokee 2 Dr.(1981-83)	78=Cherokee 4WD-4 Dr.(1984-86)	64=Comanche 2WD-6 Ft. Box(1986)	25=J-10 Truck 7 Ft. Box(1981-84)
17=Cherokee 2 Dr.(1981-83)	85=CJ-5 (1981-83)	66=Comanche 2WD-7 Ft. Box(1986)	26=J10 Truck 8 Ft. Box(1981-86)
73=Cherokee 2WD-2 Dr.(1984-86)	86=CJ-6(1981)	63=Comanche 4WD-6 Ft. Box(1986)	27=J-20 Truck 8 Ft. Box(1981-86)
74=Cherokee 2WD-4 Dr.(1984-86)	87=CJ-7(1981-86)	65=Comanche 4WD-7 Ft. Box(1986)	15=Wagoneer 4 Dr.(1981-83)
18=Cherokee 4 Dr.(1981-83)	88=CJ-8, Scrambler(1981-86)	15=Grand Wagoneer 4 Dr.(1984-86)	75=Wagoneer 4WD-4 Dr.(1984-86)
77=Cherokee 4WD-2 Dr.(1984-86)			

BODY
CJ=CJ-5, CJ-6, CJ-7, CJ-8, Scrambler(1981-86)
MJ=Comanche Pickup(1986)

STYLES
SJ=Wagoneer(1981-83), Grand Wagoneer(1984-86), Cherokee(1981-83), J-10, J-20(1981-86)
XJ=Wagoneer(1984-86), Cherokee(1984-86)

AR = Use as Required - = Non Illustrated Part P.A.R. = Paint as Required

HEADLINING AND UPPER TRIM MOULDINGS WITHOUT SLIDING SUNROOF SJ CHEROKEE, SJ WAGONEER
Figure 48-300

81J 048 300

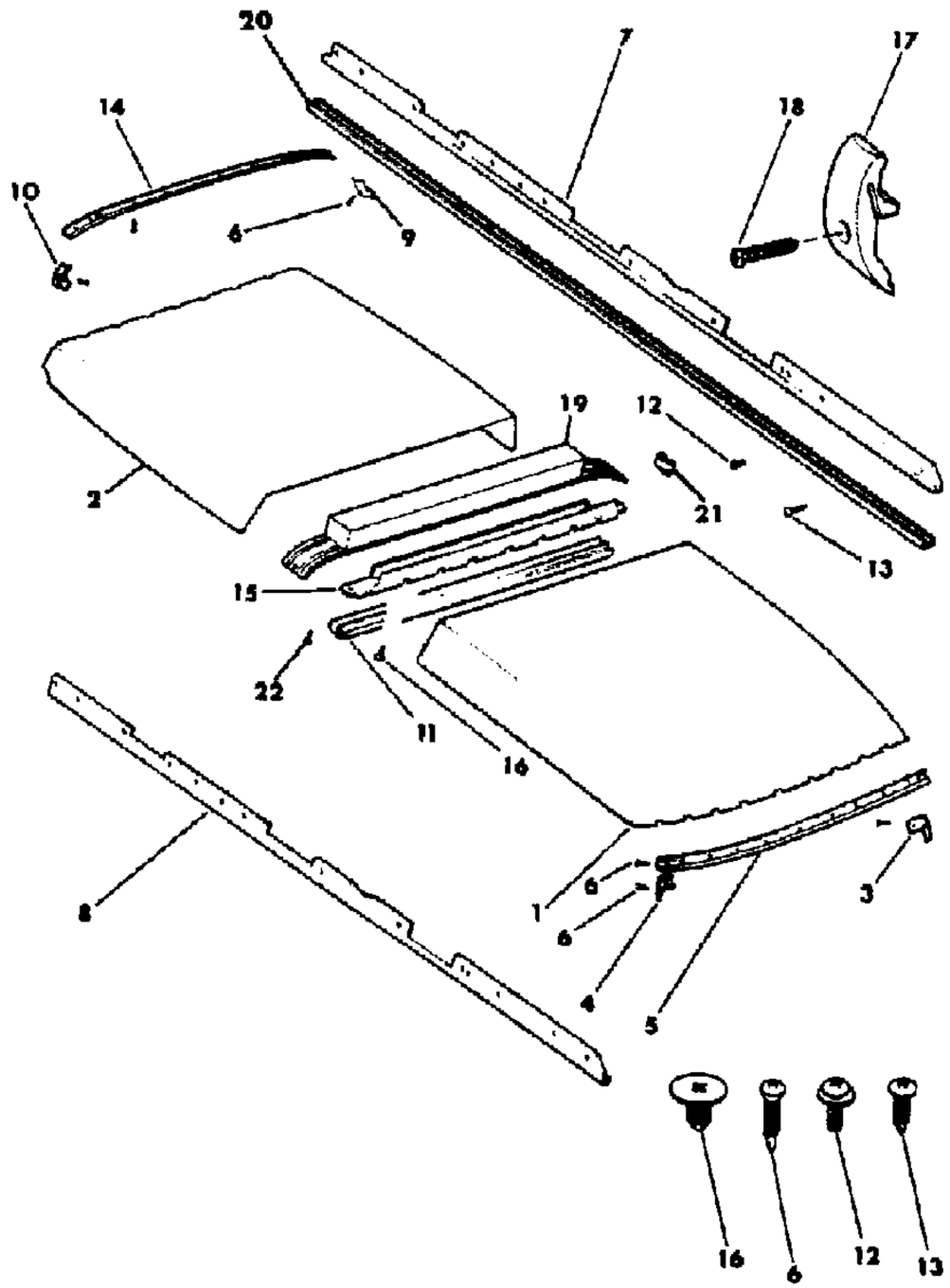

ITEM	PART NUMBER	QTY	BODY	MODEL	DESCRIPTION
	J576 5025	1			Almond
	J575 0415	1			Beige
	J545 3679	1			Black
	J546 3109	1			Blue, 1981
	J576 0085	1			Blue, 1982
	J576 6051	1			Garnet
	J576 6049	1			Honey
	J575 4961	1			Nutmeg
8					MOULDING, Headlining
	J576 5024	1			Almond
	J575 0416	1			Beige
	J545 3680	1			Black
	J546 3110	1			Blue, 1981
	J576 0084	1			Blue, 1982
	J576 6052	1			Garnet
	J576 6050	1			Honey
	J575 4960	1			Nutmeg
9	J545 3713	1			CAP, Moulding, P.A.R.
10	J545 3714	1			CAP, Moulding, P.A.R.
11					MOULDING, Headlining
	J576 5034	1			Almond
	J575 0417	1			Beige
	J546 9294	1			Black
	J546 9811	1			Blue, 1981
	J576 0087	1			Blue, 1982
	J576 6066	1			Garnet
	J576 6065	1			Honey
	J575 4965	1			Nutmeg
12					SCREW
	J045 7002	22			.38"
	J097 4764	16			.50"
13	J400 4924	2			SCREW
14	J545 3693	1			MOULDING, Rear Garnish, P.A.R.
15	J546 9297	1			RETAINER
16	J400 6088	8			FASTENER
17					HOOK, Coat
	J576 4428	2			Almond
	J575 0425	2			Beige
	J367 8791	2			Black

MODEL CODES

16=Cherokee 2 Dr.(1981-83)
17=Cherokee 2 Dr.(1981-83)
73=Cherokee 2WD-2 Dr.(1984-86)
74=Cherokee 2WD-4 Dr.(1984-86)
18=Cherokee 4 Dr.(1981-83)
77=Cherokee 4WD-2 Dr.(1984-86)
78=Cherokee 4WD-4 Dr.(1984-86)
85=CJ-5 (1981-83)
86=CJ-6(1981)
87=CJ-7(1981-86)
88=CJ-8, Scrambler(1981-86)
64=Comanche 2WD-6 Ft. Box(1986)
66=Comanche 2WD-7 Ft. Box(1986)
63=Comanche 4WD-6 Ft. Box(1986)
65=Comanche 4WD-7 Ft. Box(1986)
15=Grand Wagoneer 4 Dr.(1984-86)
25=J-10 Truck 7 Ft. Box(1981-84)
26=J10 Truck 8 Ft. Box(1981-86)
27=J-20 Truck 8 Ft. Box(1981-86)
15=Wagoneer 4 Dr.(1981-83)
75=Wagoneer 4WD-4 Dr.(1984-86)

BODY
CJ=CJ-5, CJ-6, CJ-7, CJ-8, Scrambler(1981-86)
MJ=Comanche Pickup(1986)

STYLES
SJ=Wagoneer(1981-83), Grand Wagoneer(1984-86), Cherokee(1981-83), J-10, J-20(1981-86)
XJ=Wagoneer(1984-86), Cherokee(1984-86)

AR = Use as Required - = Non Illustrated Part P.A.R. = Paint as Required

HEADLINING AND UPPER TRIM MOULDINGS WITHOUT SLIDING SUNROOF SJ CHEROKEE, SJ WAGONEER
Figure 48-300

81J 048 300

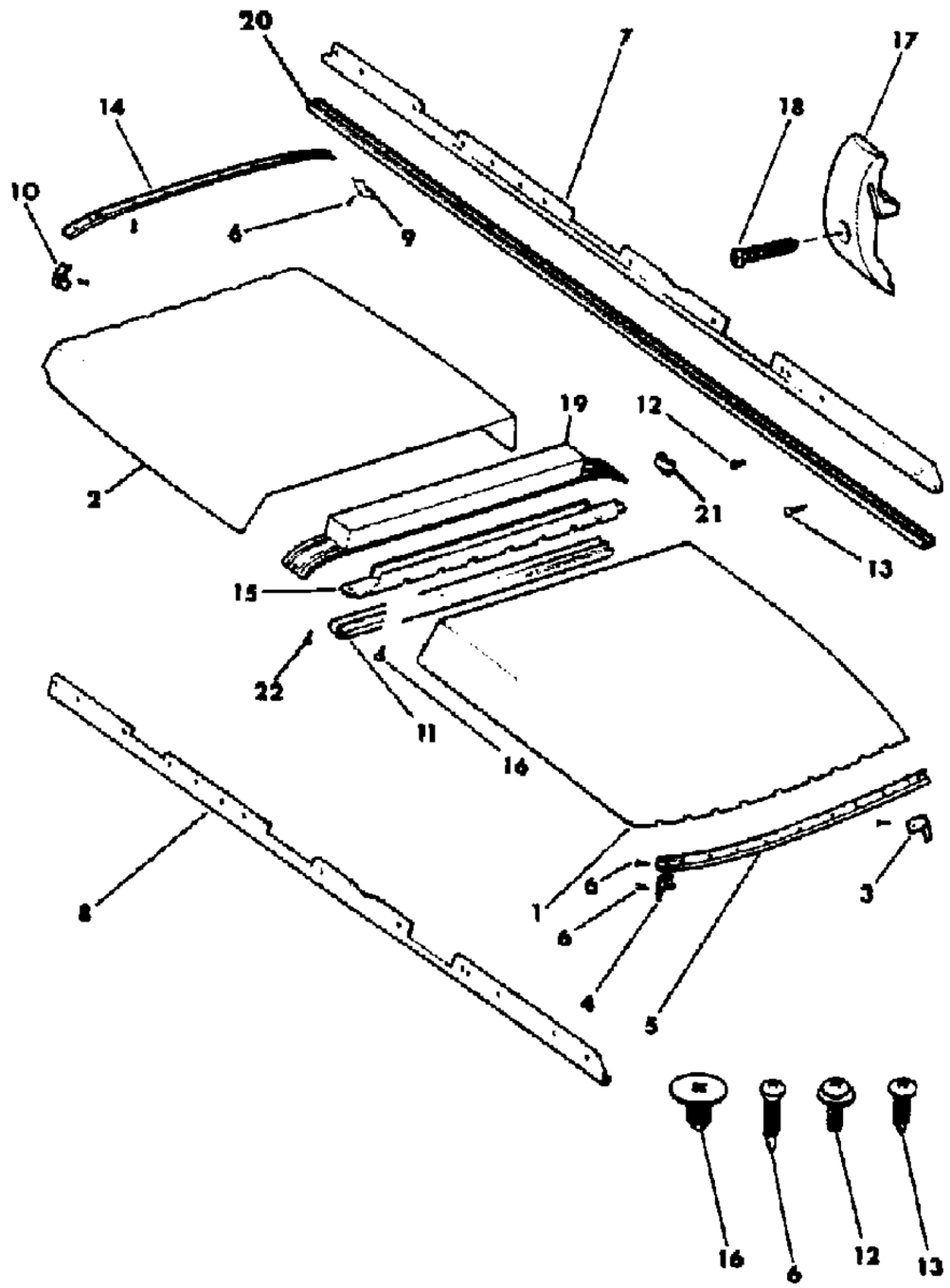

ITEM	PART NUMBER	QTY	BODY	MODEL	DESCRIPTION
	J372 2304	2			Blue, 1981
	J576 0067	2			Blue, 1982
	J576 5257	2			Garnet
	J576 5260	2			Honey
	J575 5000	2			Nutmeg
18	J812 2121	2			SCREW
19	J545 3717	1			RETAINER
20					WELT
	J575 0414	2			Beige
	J545 5002	2			Black
	J546 3107	2			Blue
	J576 0082	2			Blue, 1982
	J575 4958	2			Nutmeg
21	J096 3473	2			RETAINER
22	J400 4884	2			SCREW

MODEL CODES

16=Cherokee 2 Dr.(1981-83)
17=Cherokee 2 Dr.(1981-83)
73=Cherokee 2WD-2 Dr.(1984-86)
74=Cherokee 2WD-4 Dr.(1984-86)
18=Cherokee 4 Dr.(1981-83)
77=Cherokee 4WD-2 Dr.(1984-86)
78=Cherokee 4WD-4 Dr.(1984-86)
85=CJ-5 (1981-83)
86=CJ-6(1981)
87=CJ-7(1981-86)
88=CJ-8, Scrambler(1981-86)
64=Comanche 2WD-6 Ft. Box(1986)
66=Comanche 2WD-7 Ft. Box(1986)
63=Comanche 4WD-6 Ft. Box(1986)
65=Comanche 4WD-7 Ft. Box(1986)
15=Grand Wagoneer 4 Dr.(1984-86)
25=J-10 Truck 7 Ft. Box(1981-84)
26=J10 Truck 8 Ft. Box(1981-86)
27=J-20 Truck 8 Ft. Box(1981-86)
15=Wagoneer 4 Dr.(1981-83)
75=Wagoneer 4WD-4 Dr.(1984-86)

BODY
CJ=CJ-5, CJ-6, CJ-7, CJ-8, Scrambler(1981-86)
MJ=Comanche Pickup(1986)

STYLES
SJ=Wagoneer(1981-83), Grand Wagoneer(1984-86), Cherokee(1981-83), J-10, J-20(1981-86)
XJ=Wagoneer(1984-86), Cherokee(1984-86)

AR = Use as Required - = Non Illustrated Part P.A.R. = Paint as Required

HEADLINING AND UPPER TRIM MOULDINGS J10, J20
Figure 48-400

81J 048 400

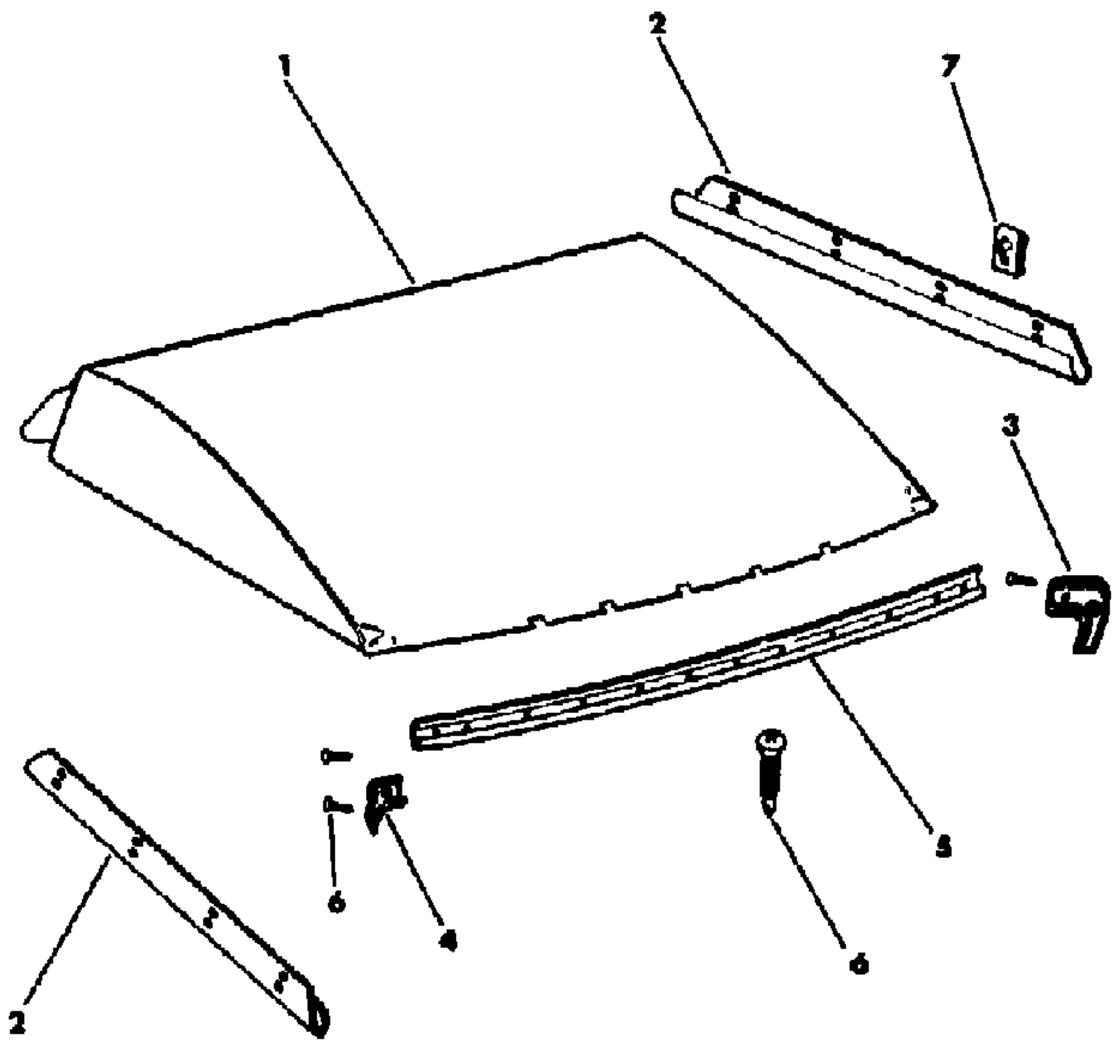

ITEM	PART NUMBER	QTY	BODY	MODEL	DESCRIPTION
1					HEADLINING ***
	J576 5023	1			Almond, without Extra Quiet Insulation
	J576 5038	1			Almond, with Extra Quiet Insulation
	J546 9712	1			Beige, without Extra Quiet Insulation
	J575 0449	1			Beige, with Extra Quiet Insulation
	J575 0807	1			Black
	J576 2101	1			Blue
	J576 6072	1			Honey, without Extra Quiet Insulation
	J576 6081	1			Honey, with Extra Quiet Insulation
	J575 5901	1			Nutmeg
2					MOULDING, Headlining
	J576 5035	2			Almond
	J546 9730	2			Beige
	J575 4727	2			Black
	J576 2100	2			Blue
	J576 6073	2			Honey
	J575 5902	2			Nutmeg
3	J545 3701	1			CAP, Moulding, P.A.R.
4	J545 3702	1			CAP, Moulding, P.A.R.
5	J545 3687	1			MOULDING, Header, P.A.R.
6	J400 4930	11			SCREW
7	J400 0322	8			SCREW

MODEL CODES

16=Cherokee 2 Dr.(1981-83)
17=Cherokee 2 Dr.(1981-83)
73=Cherokee 2WD-2 Dr.(1984-86)
74=Cherokee 2WD-4 Dr.(1984-86)
18=Cherokee 4 Dr.(1981-83)
77=Cherokee 4WD-2 Dr.(1984-86)
78=Cherokee 4WD-4 Dr.(1984-86)
85=CJ-5 (1981-83)
86=CJ-6(1981)
87=CJ-7(1981-86)
88=CJ-8, Scrambler(1981-86)
64=Comanche 2WD-6 Ft. Box(1986)
66=Comanche 2WD-7 Ft. Box(1986)
63=Comanche 4WD-6 Ft. Box(1986)
65=Comanche 4WD-7 Ft. Box(1986)
15=Grand Wagoneer 4 Dr.(1984-86)
25=J-10 Truck 7 Ft. Box(1981-84)
26=J10 Truck 8 Ft. Box(1981-86)
27=J-20 Truck 8 Ft. Box(1981-86)
15=Wagoneer 4 Dr.(1981-83)
75=Wagoneer 4WD-4 Dr.(1984-86)

BODY
CJ=CJ-5, CJ-6, CJ-7, CJ-8, Scrambler(1981-86)
MJ=Comanche Pickup(1986)

STYLES
SJ=Wagoneer(1981-83), Grand Wagoneer(1984-86), Cherokee(1981-83), J-10, J-20(1981-86)
XJ=Wagoneer(1984-86), Cherokee(1984-86)

AR = Use as Required - = Non Illustrated Part P.A.R. = Paint as Required

« RETURN TO GROUP INDEX

SUNVISORS AND VANITY MIRROR SJ CHEROKEE, SJ WAGONEER, J10, J20
Figure 48-500

81J 048 500

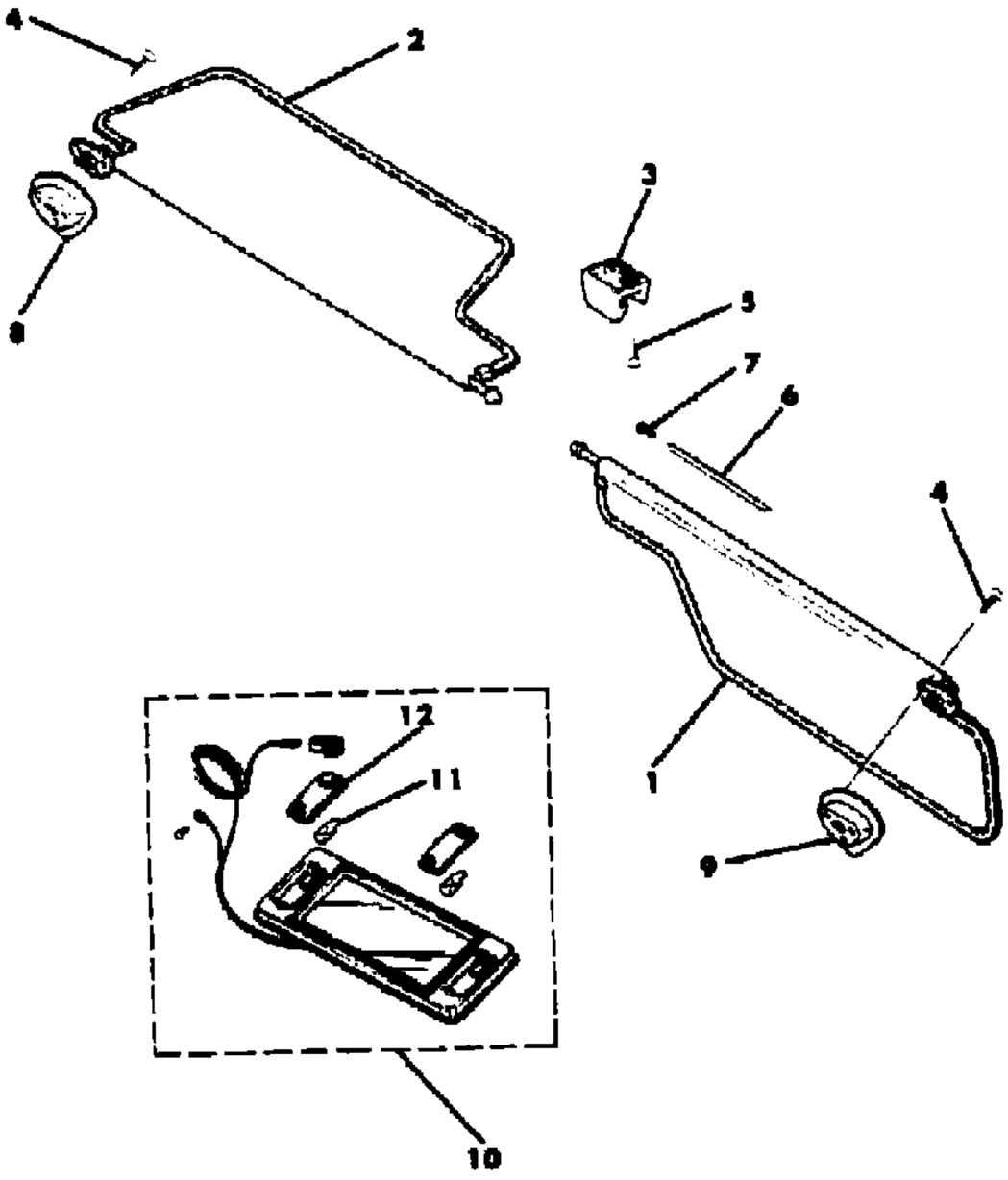

ITEM	PART NUMBER	QTY	BODY	MODEL	DESCRIPTION
1					SUNVISOR ***
					Without EXPORT
	J576 5077	1			Almond Cloth
	J576 5075	1			Almond Vinyl
	J575 0583	1			Beige Cloth
	J575 5063	1			Beige Vinyl
	J546 5843	1			Black Vinyl
	J546 5845	1			Blue Vinyl, 1981
	J576 0703	1			Blue Vinyl, 1982
	J576 5217	1			Garnet Cloth
	J576 5221	1			Honey Cloth
	J576 5219	1			Honey Vinyl
	J575 5075	1			Nutmeg Cloth
	J575 5065	1			Nutmeg Vinyl
					EXPORT
	J576 6515	1			Almond
	J575 8527	1			Beige
	J575 8523	1			Black
	J575 8525	1			Blue
	J576 5227	1			Honey
	J575 8529	1			Nutmeg
2					SUNVISOR ***
					Without EXPORT
	J576 5076	1			Almond Cloth
	J576 5074	1			Almond Vinyl
	J575 0584	1			Beige Cloth
	J575 5062	1			Beige Vinyl
	J546 5844	1			Black Vinyl
	J546 5846	1			Blue Vinyl, 1981
	J576 0702	1			Blue Vinyl, 1982
	J576 5216	1			Garnet Cloth
	J576 5220	1			Honey Cloth
	J576 5218	1			Honey Vinyl
	J575 5074	1			Nutmeg Cloth
	J575 5064	1			Nutmeg Vinyl
					EXPORT
	J575 8526	1			Beige
	J575 8522	1			Black
	J575 8524	1			Blue

MODEL CODES

16=Cherokee 2 Dr.(1981-83)	78=Cherokee 4WD-4 Dr.(1984-86)	64=Comanche 2WD-6 Ft. Box(1986)	25=J-10 Truck 7 Ft. Box(1981-84)
17=Cherokee 2 Dr.(1981-83)	85=CJ-5 (1981-83)	66=Comanche 2WD-7 Ft. Box(1986)	26=J10 Truck 8 Ft. Box(1981-86)
73=Cherokee 2WD-2 Dr.(1984-86)	86=CJ-6(1981)	63=Comanche 4WD-6 Ft. Box(1986)	27=J-20 Truck 8 Ft. Box(1981-86)
74=Cherokee 2WD-4 Dr.(1984-86)	87=CJ-7(1981-86)	65=Comanche 4WD-7 Ft. Box(1986)	15=Wagoneer 4 Dr.(1981-83)
18=Cherokee 4 Dr.(1981-83)	88=CJ-8, Scrambler(1981-86)	15=Grand Wagoneer 4 Dr.(1984-86)	75=Wagoneer 4WD-4 Dr.(1984-86)
77=Cherokee 4WD-2 Dr.(1984-86)			

BODY
CJ=CJ-5, CJ-6, CJ-7, CJ-8, Scrambler(1981-86)
MJ=Comanche Pickup(1986)

STYLES
SJ=Wagoneer(1981-83), Grand Wagoneer(1984-86), Cherokee(1981-83), J-10, J-20(1981-86)
XJ=Wagoneer(1984-86), Cherokee(1984-86)

AR = Use as Required - = Non Illustrated Part P.A.R. = Paint as Required

81J 048 500

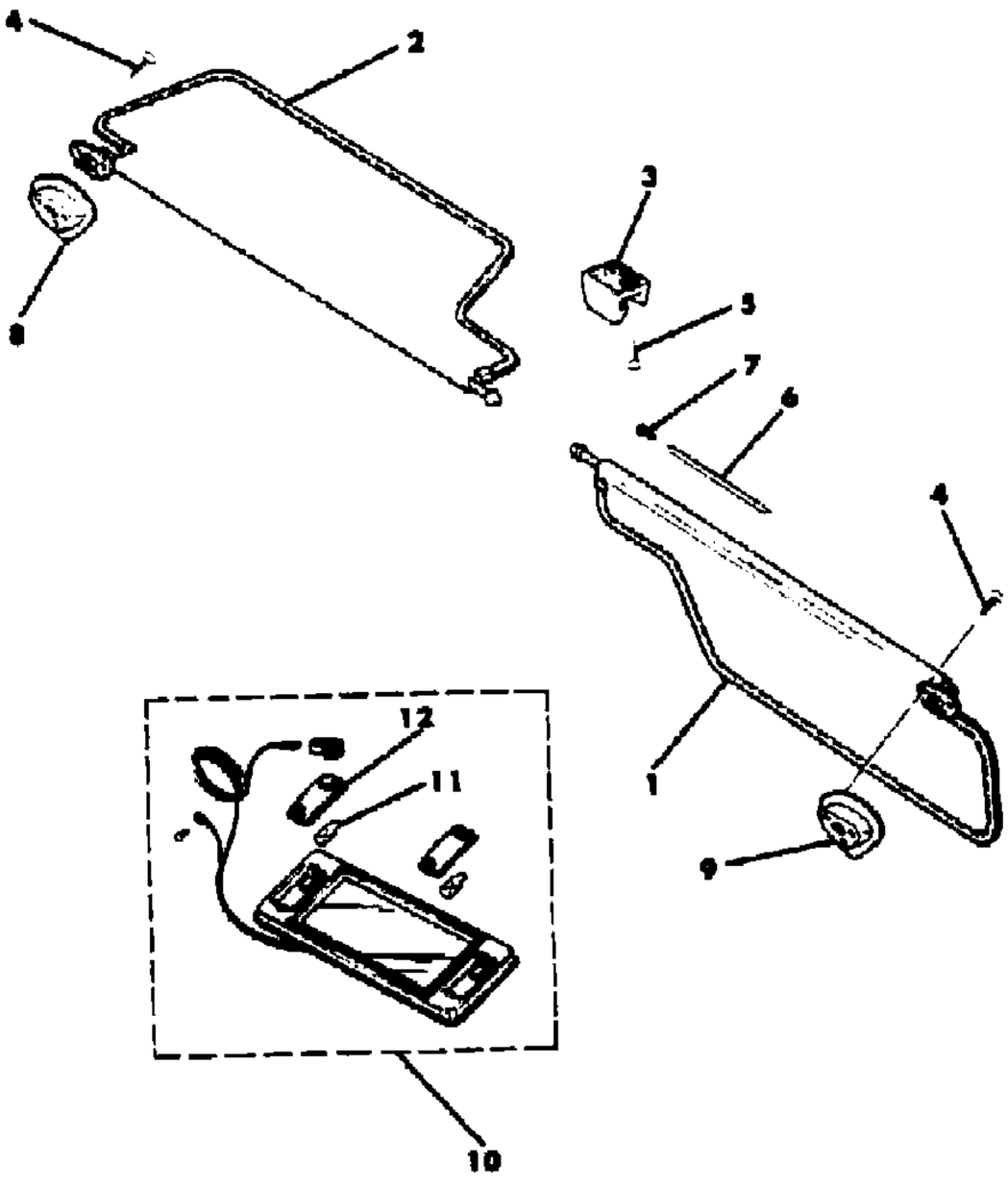

ITEM	PART NUMBER	QTY	BODY	MODEL	DESCRIPTION
	J576 5226	1			Honey
	J575 8528	1			Nutmeg
3					SUPPORT, Visor
	J576 5081	1			Almond
	J575 0487	1			Beige, 1981
	J576 0674	1			Beige, 1982-83
	J545 2445	1			Black, 1981
	J576 0671	1			Black, 1982-86
	J546 5853	1			Blue, 1981
	J576 0672	1			Blue, 1982
	J575 5067	1			Nutmeg, 1981
	J576 0673	1			Nutmeg, 1982-85
4	S016 2459	6			SCREW
5	J448 9490	2			SCREW
6	J360 4834	2			ROD, Support
7	J360 4833	2			CAP
8					ESCUTCHEON
	J576 5032	1			Almond
	J097 1518	1			Black
	J575 0418	1			Beige
	J546 3126	1			Blue, 1981
	J576 0092	1			Blue, 1982
	J576 6070	1			Garnet
	J576 6068	1			Honey
	J575 4970	1			Nutmeg
9					ESCUTCHEON
	J576 5033	1			Almond
	J097 1517	1			Black
	J575 0419	1			Beige
	J546 3125	1			Blue, 1981
	J576 0093	1			Blue, 1982
	J576 6069	1			Garnet
	J576 6067	1			Honey
	J575 4971	1			Nutmeg
10	J576 5148	1			MIRROR, Vanity, P.A.R.
11	J400 3086	2			BULB, #561
12	J812 8734	2			LENS, Light

MODEL CODES
16=Cherokee 2 Dr.(1981-83)
17=Cherokee 2 Dr.(1981-83)
73=Cherokee 2WD-2 Dr.(1984-86)
74=Cherokee 2WD-4 Dr.(1984-86)
18=Cherokee 4 Dr.(1981-83)
77=Cherokee 4WD-2 Dr.(1984-86)
78=Cherokee 4WD-4 Dr.(1984-86)
85=CJ-5 (1981-83)
86=CJ-6(1981)
87=CJ-7(1981-86)
88=CJ-8, Scrambler(1981-86)
64=Comanche 2WD-6 Ft. Box(1986)
66=Comanche 2WD-7 Ft. Box(1986)
63=Comanche 4WD-6 Ft. Box(1986)
65=Comanche 4WD-7 Ft. Box(1986)
15=Grand Wagoneer 4 Dr.(1984-86)
25=J-10 Truck 7 Ft. Box(1981-84)
26=J10 Truck 8 Ft. Box(1981-86)
27=J-20 Truck 8 Ft. Box(1981-86)
15=Wagoneer 4 Dr.(1981-83)
75=Wagoneer 4WD-4 Dr.(1984-86)

BODY
CJ=CJ-5, CJ-6, CJ-7, CJ-8, Scrambler(1981-86)
MJ=Comanche Pickup(1986)

STYLES
SJ=Wagoneer(1981-83), Grand Wagoneer(1984-86), Cherokee(1981-83), J-10, J-20(1981-86)
XJ=Wagoneer(1984-86), Cherokee(1984-86)

AR = Use as Required - = Non Illustrated Part P.A.R. = Paint as Required

PANELS, INTERIOR TRIM 2 DOOR WAGON SJ CHEROKEE
Figure 48-600

81J 048 600

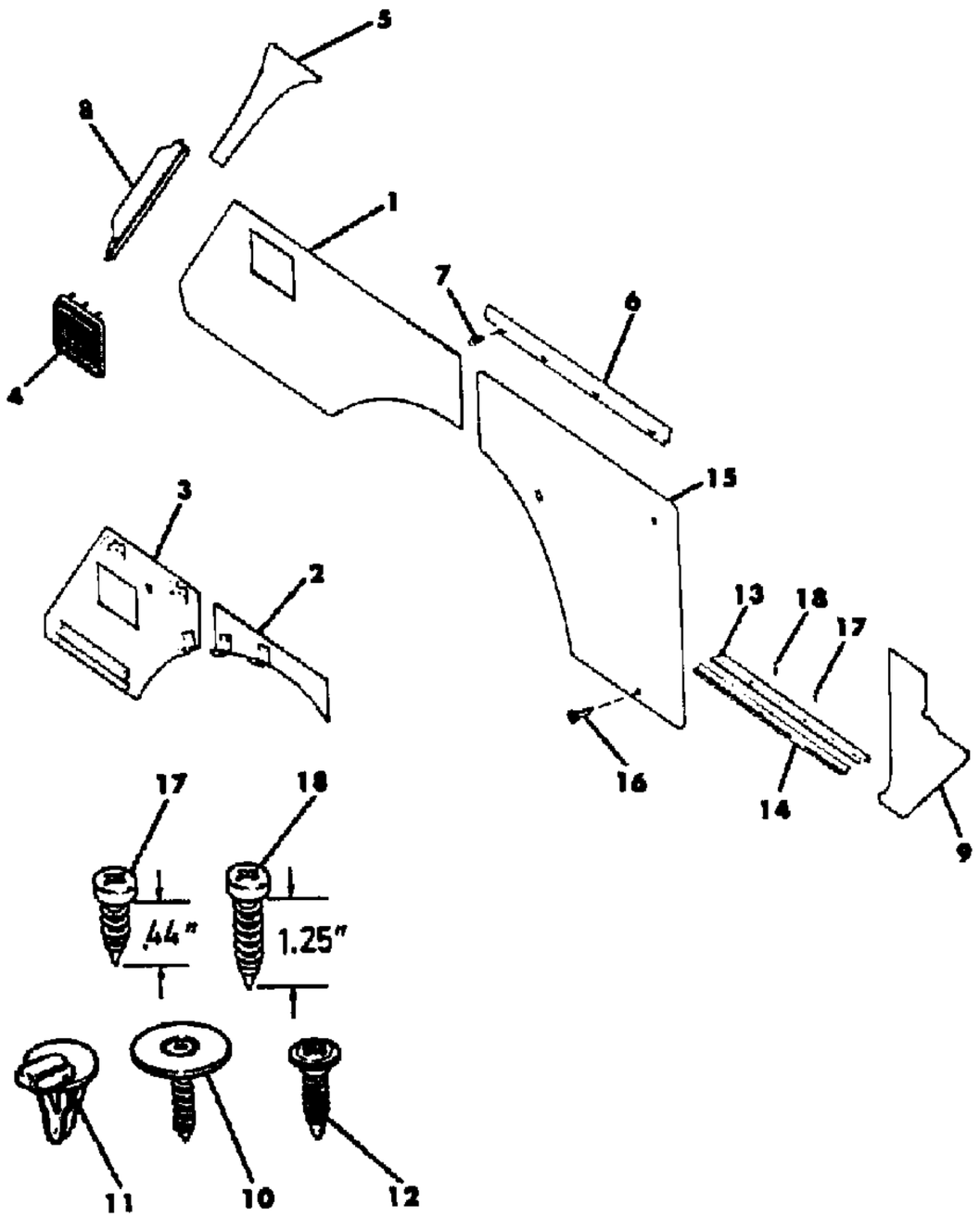

ITEM	PART NUMBER	QTY	BODY	MODEL	DESCRIPTION
1					PANEL, Quarter Trim
	J575 5973	1			1981
	J576 2005	1			Beige, 1982-83
	J546 5937	1			Black, without Carpeting on Panel, 1981
	J575 0493	1			Black, with Carpeting on Panel, 1981
	J576 2002	1			Black, without Carpeting on Panel, 1982-83
	J576 2006	1			Black, with Carpeting on Panel, 1982-83
	J546 5939	1			Blue, 1981
	J576 2003	1			Blue, 1982
	J575 5975	1			Nutmeg, without Carpeting on Panel, 1981
	J575 5985	1			Nutmeg, with Carpeting on Panel, 1981
	J576 2004	1			Nutmeg, without Carpeting on Panel, 1982-83
	J576 2007	1			Nutmeg, with Carpeting on Panel, 1982-83
2					PANEL, Quarter Trim
	J575 5972	1			Beige
	J546 5936	1			Black, without Carpeting on Panel
	J575 0494	1			Black, with Carpeting on Panel
	J546 5938	1			Blue, 1981
	J576 0120	1			Blue, 1982
	J575 5974	1			Nutmeg, without Carpeting on Panel
	J575 5984	1			Nutmeg, with Carpeting on Panel
3					PANEL, Quarter Trim
	J575 5978	1			Beige
	J546 5944	1			Black, without Carpeting on Panel
	J575 0495	1			Black, with Carpeting on Panel
	J546 5946	1			Blue, 1981
	J576 0122	1			Blue, 1982
	J575 5976	1			Nutmeg, without Carpeting on Panel
	J575 5986	1			Nutmeg, with Carpeting on Panel
4	J373 9240	2			GRILLE, Rear Speaker (Not Available)
5					PANEL, Quarter Trim
					Right
	J575 0466	1			Beige
	J546 5962	1			Black
	J546 5964	1			Blue, 1981
	J576 0124	1			Blue, 1982
	J575 5980	1			Nutmeg
					Left
	J575 0465	1			Beige

MODEL CODES

16=Cherokee 2 Dr.(1981-83)	78=Cherokee 4WD-4 Dr.(1984-86)	64=Comanche 2WD-6 Ft. Box(1986)	25=J-10 Truck 7 Ft. Box(1981-84)
17=Cherokee 2 Dr.(1981-83)	85=CJ-5 (1981-83)	66=Comanche 2WD-7 Ft. Box(1986)	26=J10 Truck 8 Ft. Box(1981-86)
73=Cherokee 2WD-2 Dr.(1984-86)	86=CJ-6(1981)	63=Comanche 4WD-6 Ft. Box(1986)	27=J-20 Truck 8 Ft. Box(1981-86)
74=Cherokee 2WD-4 Dr.(1984-86)	87=CJ-7(1981-86)	65=Comanche 4WD-7 Ft. Box(1986)	15=Wagoneer 4 Dr.(1981-83)
18=Cherokee 4 Dr.(1981-83)	88=CJ-8, Scrambler(1981-86)	15=Grand Wagoneer 4 Dr.(1984-86)	75=Wagoneer 4WD-4 Dr.(1984-86)
77=Cherokee 4WD-2 Dr.(1984-86)			

BODY
CJ=CJ-5, CJ-6, CJ-7, CJ-8, Scrambler(1981-86)
MJ=Comanche Pickup(1986)

STYLES
SJ=Wagoneer(1981-83), Grand Wagoneer(1984-86), Cherokee(1981-83), J-10, J-20(1981-86)
XJ=Wagoneer(1984-86), Cherokee(1984-86)

AR = Use as Required - = Non Illustrated Part P.A.R. = Paint as Required

PANELS, INTERIOR TRIM 2 DOOR WAGON SJ CHEROKEE
Figure 48-600

81J 048 600

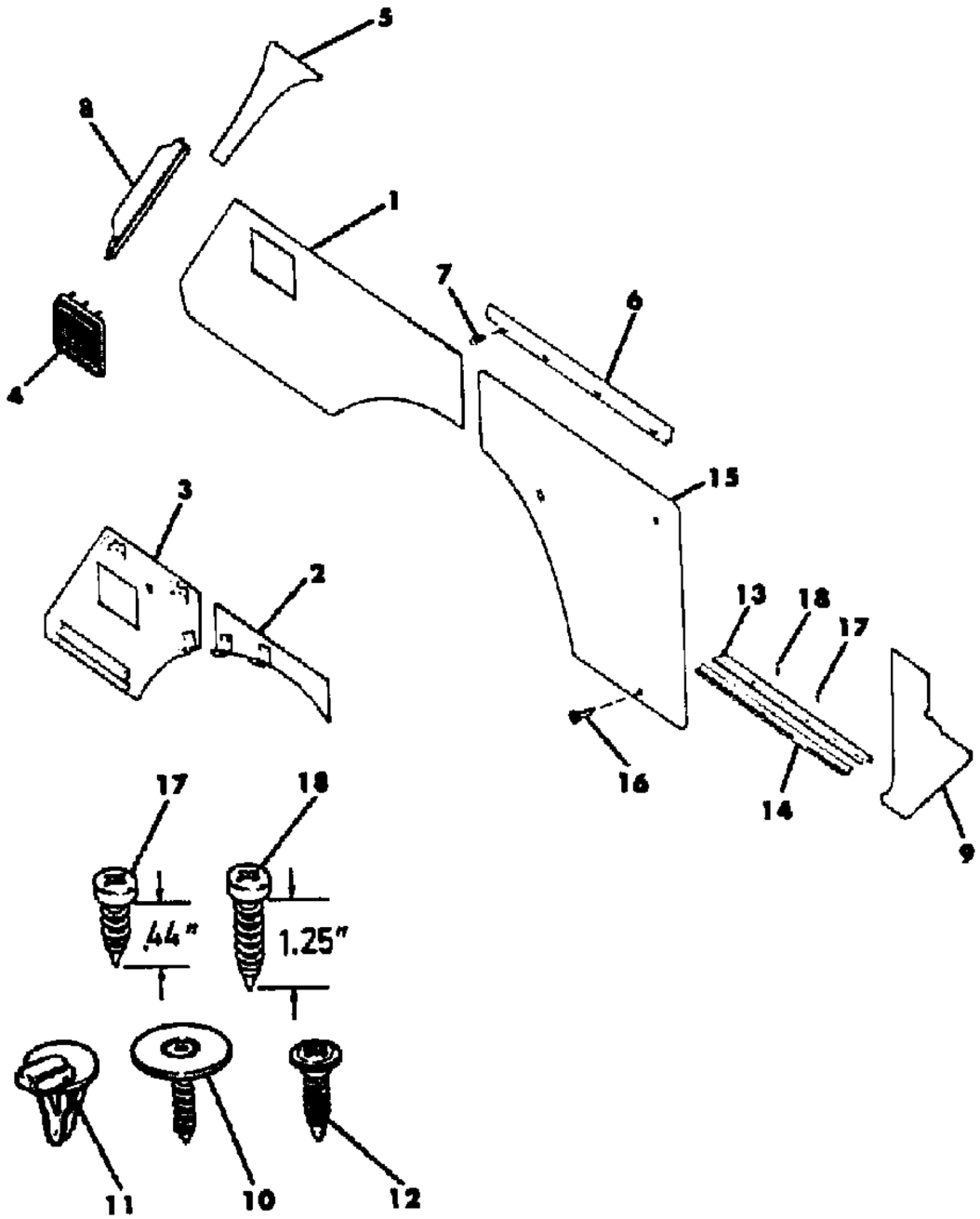

ITEM	PART NUMBER	QTY	BODY	MODEL	DESCRIPTION
	J546 5961	1			Black
	J546 5963	1			Blue, 1981
	J576 0125	1			Blue, 1982
	J575 5981	1			Nutmeg
6	J545 1748	2			RETAINER
7	J400 4047	14			FASTENER
8					COVER "D" Pillar ***
	J576 5512	1			Right
	J576 5511	1			Left
9					PANEL, Cowl Trim
					Right
	J098 8536	1			Black
	J546 5118	1			Blue, 1981
	J576 0114	1			Blue, 1982
	J575 4976	1			Brown
	J575 4978	1			Nutmeg
					Left
	J575 7615	1			Black
	J575 7617	1			Blue, 1981
	J576 0115	1			Blue, 1982
	J575 4977	1			Brown
	J575 4979	1			Nutmeg
10	3420 2419	4			SCREW
11	J400 4047	10			CLIP, Trim Panel
12	J097 4764	4			SCREW
13	J546 8673	2			PLATE, Scuff
14	J545 0534	2			PLATE, Scuff
15					PANEL, Quarter Trim
					Right
	J546 9310	1			Coded "1CD"or"1DD", without Carpeting on Panel
	J575 6642	1			Coded "1DE"or"1DG", without Carpeting on Panel
	J575 0508	1			Black, with Carpeting on Panel
	J546 9312	1			Coded "3CD"or"3DD", 1981
	J576 0116	1			Coded "3CD"or"3DD", 1982
	J575 6644	1			Coded "3DE"or"3DG", 1981
	J576 0118	1			Coded "3DE"or"3DG", 1982
	J575 6646	1			Coded "5DE"or"5DG", without Carpeting on Panel
	J575 6568	1			Nutmeg, with Carpeting on Panel
	J575 0470	1			Coded "6CD"or"6DD"

MODEL CODES

16=Cherokee 2 Dr.(1981-83)
17=Cherokee 2 Dr.(1981-83)
73=Cherokee 2WD-2 Dr.(1984-86)
74=Cherokee 2WD-4 Dr.(1984-86)
18=Cherokee 4 Dr.(1981-83)
77=Cherokee 4WD-2 Dr.(1984-86)
78=Cherokee 4WD-4 Dr.(1984-86)
85=CJ-5 (1981-83)
86=CJ-6(1981)
87=CJ-7(1981-86)
88=CJ-8, Scrambler(1981-86)
64=Comanche 2WD-6 Ft. Box(1986)
66=Comanche 2WD-7 Ft. Box(1986)
63=Comanche 4WD-6 Ft. Box(1986)
65=Comanche 4WD-7 Ft. Box(1986)
15=Grand Wagoneer 4 Dr.(1984-86)
25=J-10 Truck 7 Ft. Box(1981-84)
26=J10 Truck 8 Ft. Box(1981-86)
27=J-20 Truck 8 Ft. Box(1981-86)
15=Wagoneer 4 Dr.(1981-83)
75=Wagoneer 4WD-4 Dr.(1984-86)

BODY
CJ=CJ-5, CJ-6, CJ-7, CJ-8, Scrambler(1981-86)
MJ=Comanche Pickup(1986)

STYLES
SJ=Wagoneer(1981-83), Grand Wagoneer(1984-86), Cherokee(1981-83), J-10, J-20(1981-86)
XJ=Wagoneer(1984-86), Cherokee(1984-86)

AR = Use as Required - = Non Illustrated Part P.A.R. = Paint as Required

PANELS, INTERIOR TRIM 2 DOOR WAGON SJ CHEROKEE
Figure 48-600

81J 048 600

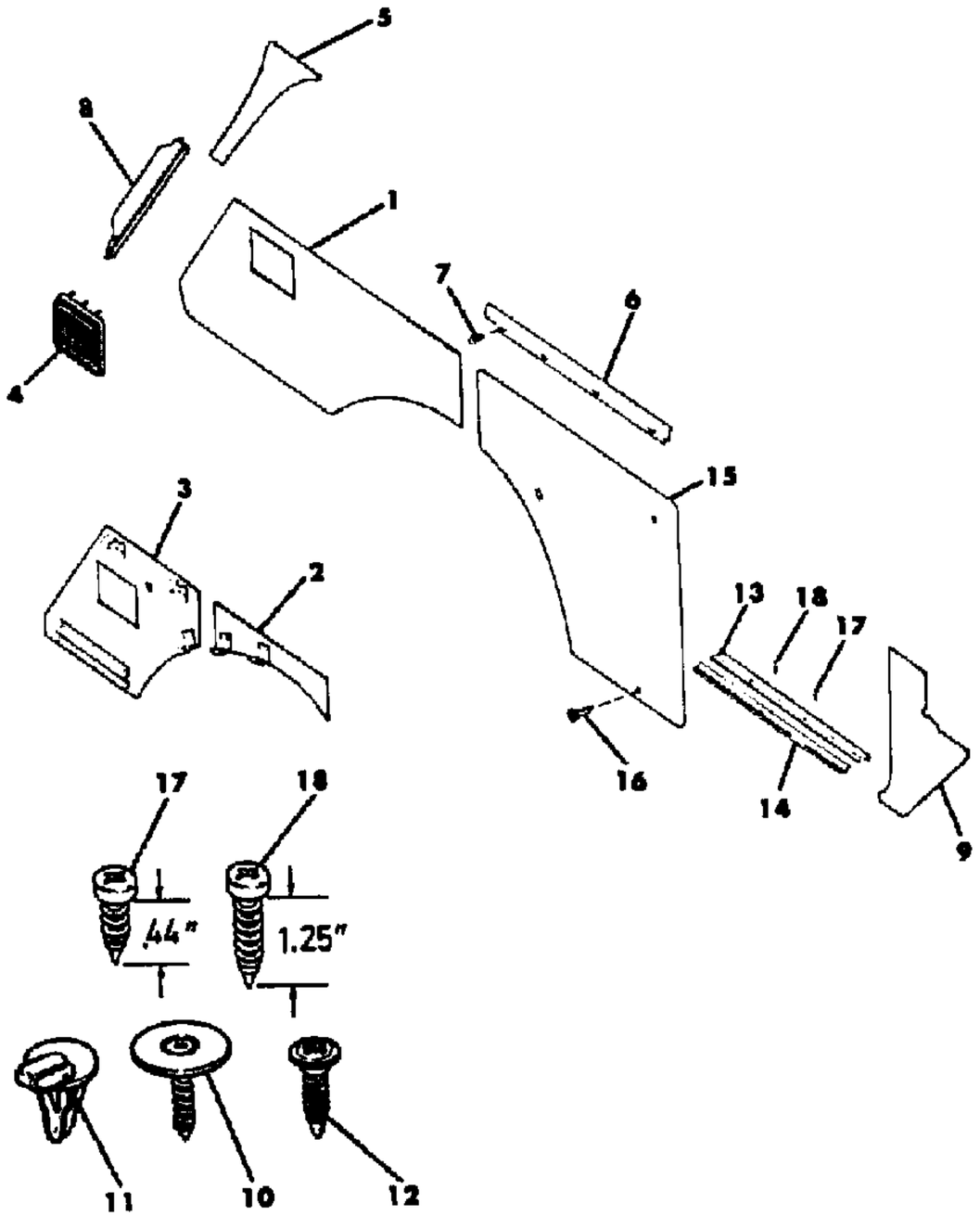

ITEM	PART NUMBER	QTY	BODY	MODEL	DESCRIPTION
	J575 6648	1			Coded "6DE"or"6DG"
					Left
	J546 9309	1			Coded "1CD"or"1DD", without Carpeting on Panel
	J575 6643	1			Coded "1DE"or"1DG", without Carpeting on Panel
	J575 0507	1			Black, with Carpeting on Panel
	J546 9311	1			Coded "3CD"or"3DD", 1981
	J576 0117	1			Coded "3CD"or"3DD", 1982
	J575 6645	1			Coded "3DE"or"3DG", 1981
	J576 0119	1			Coded "3DE"or"3DG", 1982
	J575 6647	1			Coded "5DE"or"5DG", without Carpeting on Panel
	J575 6569	1			Nutmeg, with Carpeting on Panel
	J575 0469	1			Coded "6CD"or"6DD"
	J575 6649	1			Coded "6DE"or"6DG"
16	J400 4812	8			SCREW
17	J400 4924	AR			SCREW
18	J400 1499	AR			SCREW

MODEL CODES

16=Cherokee 2 Dr.(1981-83)
17=Cherokee 2 Dr.(1981-83)
73=Cherokee 2WD-2 Dr.(1984-86)
74=Cherokee 2WD-4 Dr.(1984-86)
18=Cherokee 4 Dr.(1981-83)
77=Cherokee 4WD-2 Dr.(1984-86)
78=Cherokee 4WD-4 Dr.(1984-86)
85=CJ-5 (1981-83)
86=CJ-6(1981)
87=CJ-7(1981-86)
88=CJ-8, Scrambler(1981-86)
64=Comanche 2WD-6 Ft. Box(1986)
66=Comanche 2WD-7 Ft. Box(1986)
63=Comanche 4WD-6 Ft. Box(1986)
65=Comanche 4WD-7 Ft. Box(1986)
15=Grand Wagoneer 4 Dr.(1984-86)
25=J-10 Truck 7 Ft. Box(1981-84)
26=J10 Truck 8 Ft. Box(1981-86)
27=J-20 Truck 8 Ft. Box(1981-86)
15=Wagoneer 4 Dr.(1981-83)
75=Wagoneer 4WD-4 Dr.(1984-86)

BODY
CJ=CJ-5, CJ-6, CJ-7, CJ-8, Scrambler(1981-86)
MJ=Comanche Pickup(1986)

STYLES
SJ=Wagoneer(1981-83), Grand Wagoneer(1984-86), Cherokee(1981-83), J-10, J-20(1981-86)
XJ=Wagoneer(1984-86), Cherokee(1984-86)

AR = Use as Required - = Non Illustrated Part P.A.R. = Paint as Required

« RETURN TO GROUP INDEX

PANELS, INTERIOR TRIM 4 DOOR WAGON SJ CHEROKEE, SJ WAGONEER
Figure 48-700

81J 048 700

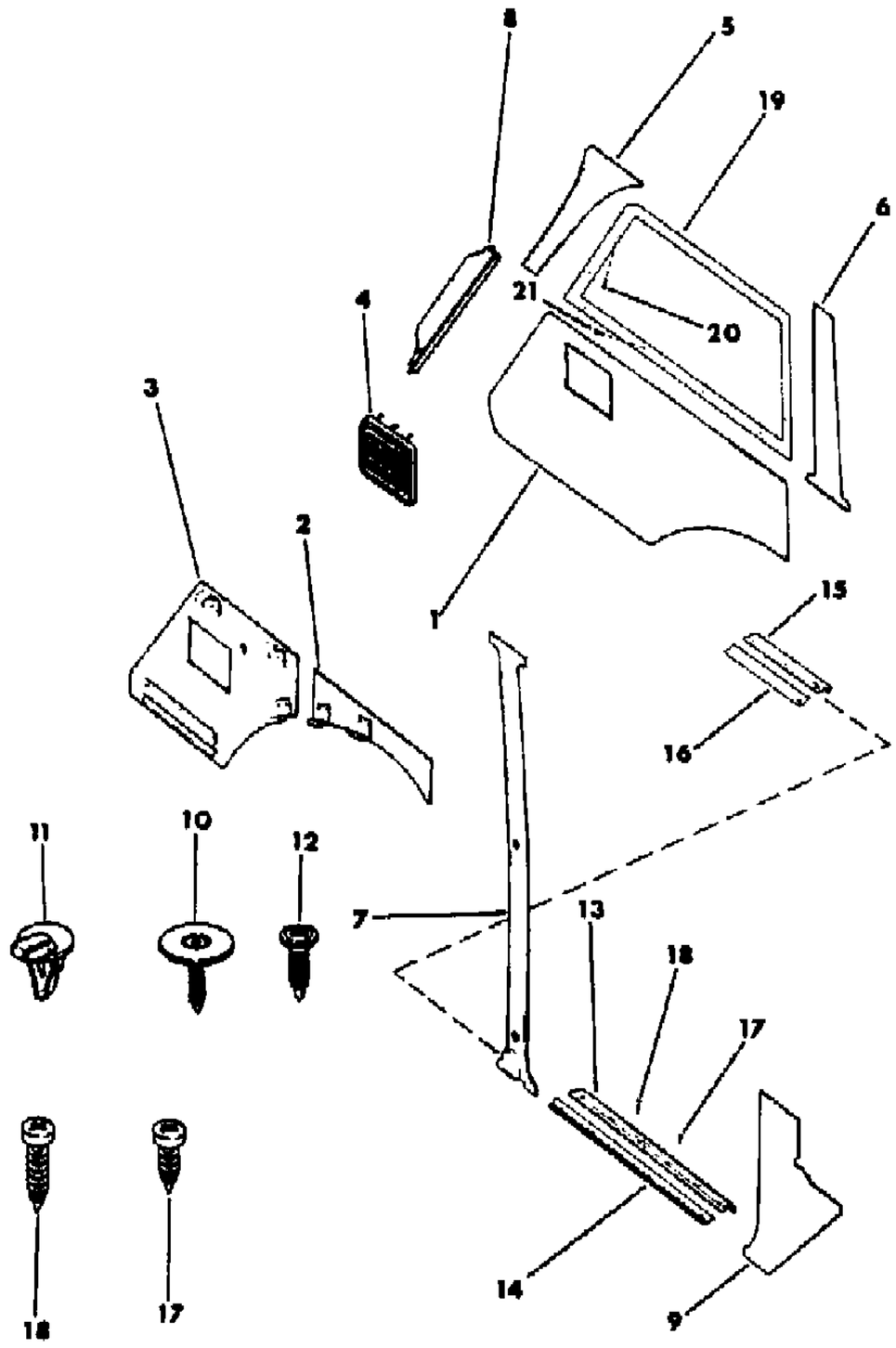

ITEM	PART NUMBER	QTY	BODY	MODEL	DESCRIPTION
1					PANEL, Quarter Trim
	J576 4901	1			Almond, without Carpeting on Panel
	J576 4903	1			Almond, with Carpeting on Panel
	J575 5973	1			Beige, 1981
	J576 2005	1			Beige, 1982-83
	J546 5937	1			Black, without Carpeting on Panel, 1981
	J575 0493	1			Black, with Carpeting on Panel, 1981
	J576 2002	1			Black, without Carpeting on Panel, 1982-83
	J576 2006	1			Black, with Carpeting on Panel, 1982-83
	J546 5939	1			Blue, 1981
	J576 2003	1			Blue, 1982
	J575 5987	1			Brown, 1981
	J576 2008	1			Brown, 1982-83
	J576 6085	1			Garnet
	J576 6095	1			Honey, without Carpeting on Panel
	J576 6099	1			Honey, with Carpeting on Panel
	J575 5975	1			Nutmeg, without Carpeting on Panel, 1981
	J575 5985	1			Nutmeg, with Carpeting on Panel, 1985
	J576 2004	1			Nutmeg, without Carpeting on Panel, 1982-83
	J576 4902	1			Nutmeg, without Carpeting on Panel, 1984-85
	J576 2007	1			Nutmeg, with Carpeting on Panel, 1982-85
2					PANEL, Quarter Trim
	J576 4904	1			Almond, without Carpeting on Panel
	J576 4906	1			Almond, with Carpeting on Panel
	J575 5972	1			Beige
	J576 5936	1			Black, without Carpeting on Panel
	J575 0494	1			Black, with Carpeting on Panel
	J576 5938	1			Blue, 1981
	J576 0120	1			Blue, 1982
	J575 5988	1			Brown
	J576 6084	1			Garnet
	J576 6096	1			Honey, without Carpeting on Panel
	J576 6098	1			Honey, with Carpeting on Panel
	J575 5974	1			Nutmeg, without Carpeting on Panel, 1981-83
	J576 4905	1			Nutmeg, without Carpeting on Panel, 1984-85
	J575 5984	1			Nutmeg, with Carpeting on Panel
3					PANEL, Quarter Trim
	J576 4907	1			Almond, without Carpeting on Panel
	J576 4909	1			Almond, with Carpeting on Panel

MODEL CODES

16=Cherokee 2 Dr.(1981-83)	78=Cherokee 4WD-4 Dr.(1984-86)	64=Comanche 2WD-6 Ft. Box(1986)	25=J-10 Truck 7 Ft. Box(1981-84)
17=Cherokee 2 Dr.(1981-83)	85=CJ-5 (1981-83)	66=Comanche 2WD-7 Ft. Box(1986)	26=J10 Truck 8 Ft. Box(1981-86)
73=Cherokee 2WD-2 Dr.(1984-86)	86=CJ-6(1981)	63=Comanche 4WD-6 Ft. Box(1986)	27=J-20 Truck 8 Ft. Box(1981-86)
74=Cherokee 2WD-4 Dr.(1984-86)	87=CJ-7(1981-86)	65=Comanche 4WD-7 Ft. Box(1986)	15=Wagoneer 4 Dr.(1981-83)
18=Cherokee 4 Dr.(1981-83)	88=CJ-8, Scrambler(1981-86)	15=Grand Wagoneer 4 Dr.(1984-86)	75=Wagoneer 4WD-4 Dr.(1984-86)
77=Cherokee 4WD-2 Dr.(1984-86)			

BODY
CJ=CJ-5, CJ-6, CJ-7, CJ-8, Scrambler(1981-86)
MJ=Comanche Pickup(1986)

STYLES
SJ=Wagoneer(1981-83), Grand Wagoneer(1984-86), Cherokee(1981-83), J-10, J-20(1981-86)
XJ=Wagoneer(1984-86), Cherokee(1984-86)

AR = Use as Required - = Non Illustrated Part P.A.R. = Paint as Required

« RETURN TO GROUP INDEX »

PANELS, INTERIOR TRIM 4 DOOR WAGON SJ CHEROKEE, SJ WAGONEER
Figure 48-700

81J 048 700

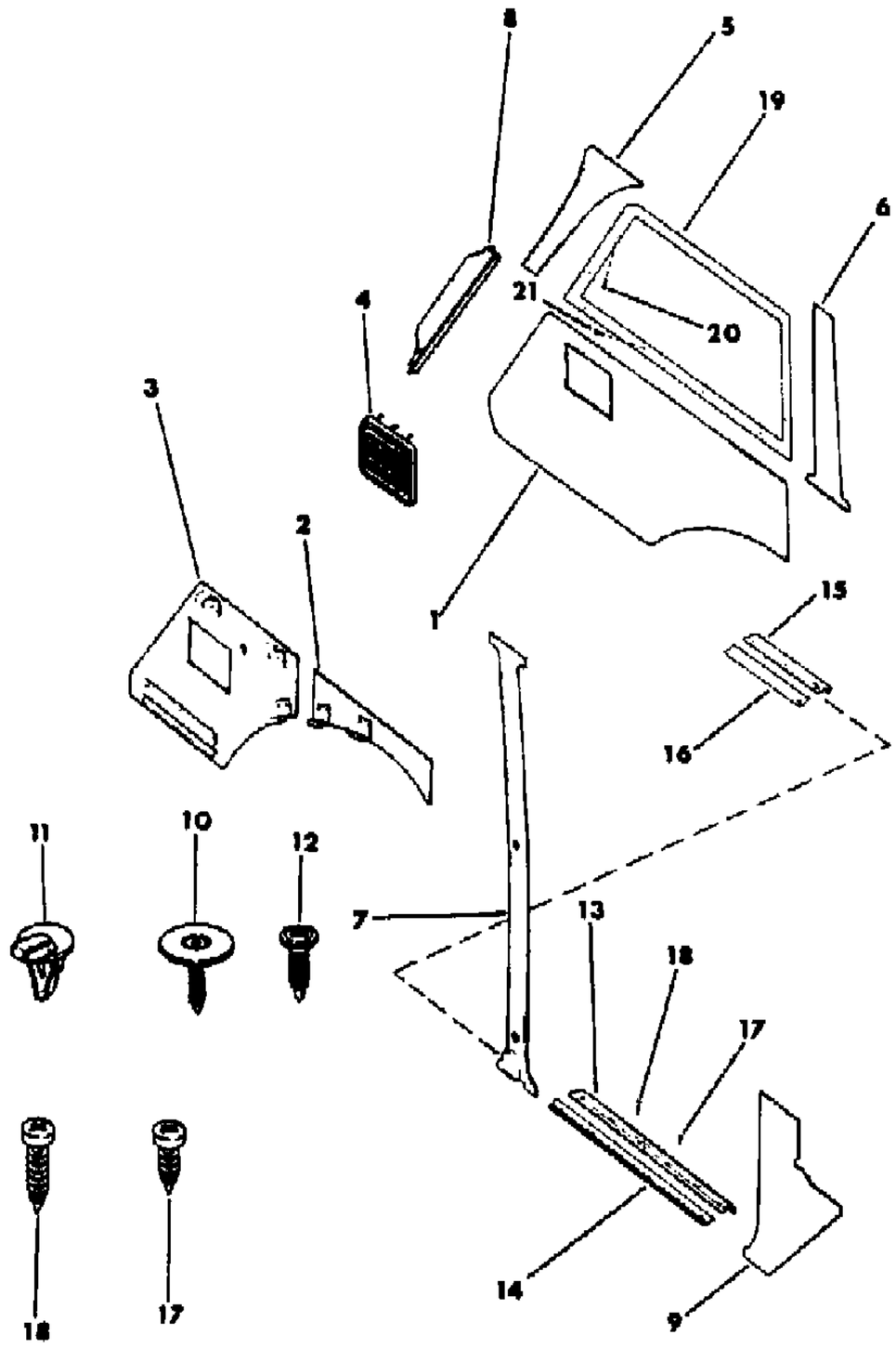

ITEM	PART NUMBER	QTY	BODY	MODEL	DESCRIPTION
	J575 5978	1			Beige
	J546 5944	1			Black, without Carpeting on Panel
	J575 0495	1			Black, with Carpeting on Panel
	J546 5946	1			Blue, 1981
	J576 0122	1			Blue, 1982
	J575 5990	1			Brown
	J576 6090	1			Garnet
	J576 6094	1			Honey, without Carpeting on Panel
	J576 6102	1			Honey, with Carpeting on Panel
	J575 5976	1			Nutmeg, without Carpeting on Panel, 1981-83
	J576 4908	1			Nutmeg, without Carpeting on Panel, 1984-85
	J575 5986	1			Nutmeg, with Carpeting on Panel
4					GRILLE, Rear Speaker
	J373 9240	2			P.A.R., 1981-85
	J373 9240	2			P.A.R., without Grand Wagoneer, 1986
	3501 4002	2			Garnet, with Grand Wagoneer, 1986
	3501 4013	2			Honey, without Grand Wagoneer, 1986
5					PANEL, Quarter Trim
					Right
	J576 4910	1			Almond
	J575 0466	1			Beige
	J546 5962	1			Black
	J546 5964	1			Blue, 1981
	J576 0124	1			Blue, 1982
	J576 6088	1			Garnet
	J576 6106	1			Honey
	J575 5980	1			Nutmeg, 1981-82
	J576 4912	1			Nutmeg, 1983-85
					Left
	J576 4911	1			Almond
	J575 0465	1			Beige
	J576 5961	1			Black
	J546 5963	1			Blue, 1981
	J576 0125	1			Blue, 1982
	J576 6089	1			Garnet
	J576 6107	1			Honey
	J575 5981	1			Nutmeg, 1981-82
	J576 4913	1			Nutmeg, 1983-85
6					PANEL, Quarter Trim

MODEL CODES

16=Cherokee 2 Dr.(1981-83)	78=Cherokee 4WD-4 Dr.(1984-86)	64=Comanche 2WD-6 Ft. Box(1986)	25=J-10 Truck 7 Ft. Box(1981-84)
17=Cherokee 2 Dr.(1981-83)	85=CJ-5 (1981-83)	66=Comanche 2WD-7 Ft. Box(1986)	26=J10 Truck 8 Ft. Box(1981-86)
73=Cherokee 2WD-2 Dr.(1984-86)	86=CJ-6(1981)	63=Comanche 4WD-6 Ft. Box(1986)	27=J-20 Truck 8 Ft. Box(1981-86)
74=Cherokee 2WD-4 Dr.(1984-86)	87=CJ-7(1981-86)	65=Comanche 4WD-7 Ft. Box(1986)	15=Wagoneer 4 Dr.(1981-83)
18=Cherokee 4 Dr.(1981-83)	88=CJ-8, Scrambler(1981-86)	15=Grand Wagoneer 4 Dr.(1984-86)	75=Wagoneer 4WD-4 Dr.(1984-86)
77=Cherokee 4WD-2 Dr.(1984-86)			

BODY
CJ=CJ-5, CJ-6, CJ-7, CJ-8, Scrambler(1981-86)
MJ=Comanche Pickup(1986)

STYLES
SJ=Wagoneer(1981-83), Grand Wagoneer(1984-86), Cherokee(1981-83), J-10, J-20(1981-86)
XJ=Wagoneer(1984-86), Cherokee(1984-86)

AR = Use as Required - = Non Illustrated Part P.A.R. = Paint as Required

PANELS, INTERIOR TRIM 4 DOOR WAGON SJ CHEROKEE, SJ WAGONEER
Figure 48-700

81J 048 700

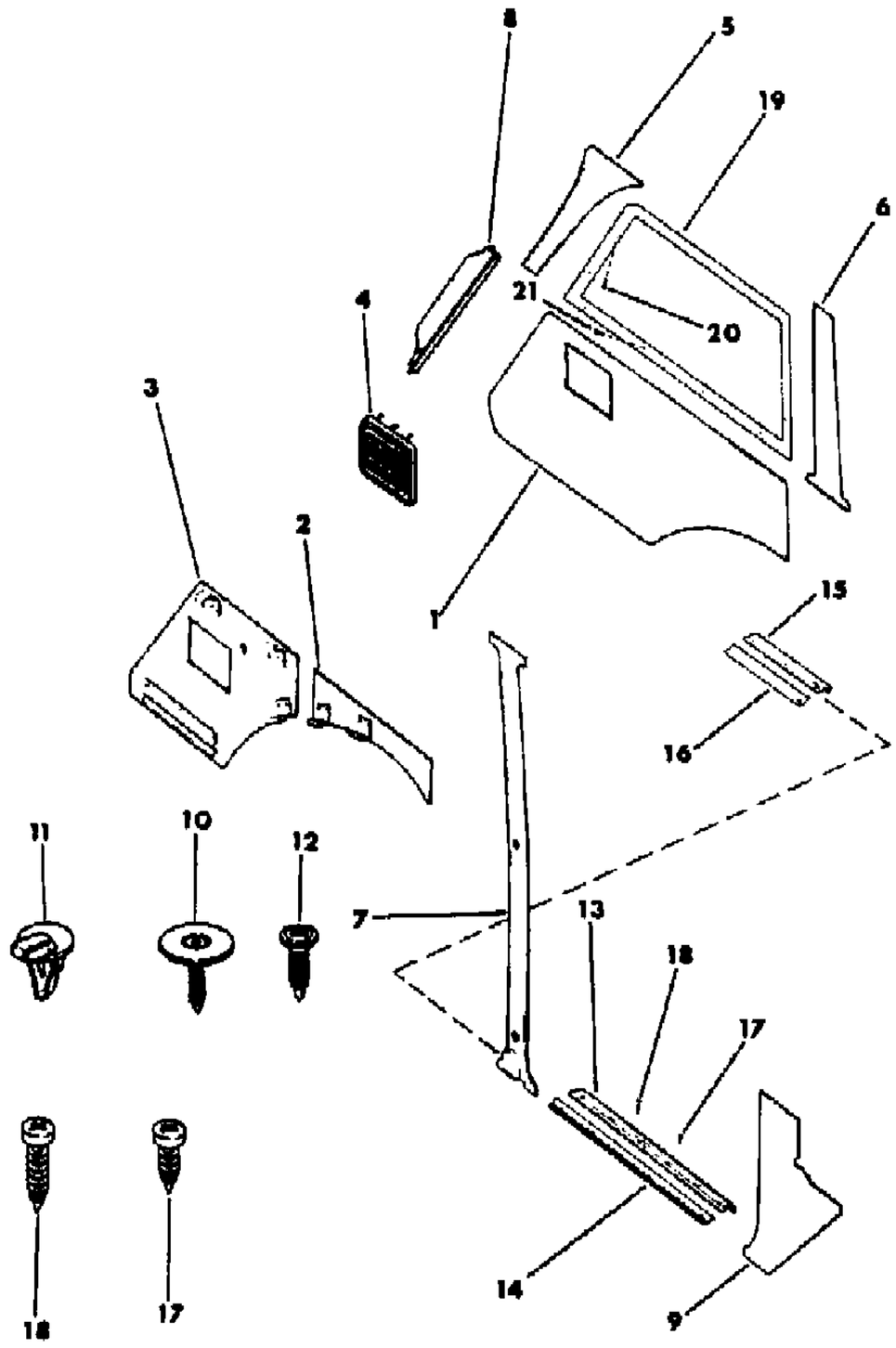

ITEM	PART NUMBER	QTY	BODY	MODEL	DESCRIPTION
					Right
	J576 4998	1			Almond
	J575 5008	1			Beige
	J098 1558	1			Black
	J546 9552	1			Blue, 1981
	J576 0100	1			Blue, 1982
	J576 6114	1			Garnet
	J576 6112	1			Honey
	J575 5010	1			Nutmeg
					Left
	J576 4999	1			Almond
	J575 5009	1			Beige
	J098 1557	1			Black
	J546 9551	1			Blue, 1981
	J576 0101	1			Blue, 1982
	J576 6115	1			Garnet
	J576 6113	1			Honey
	J575 5011	1			Nutmeg
7					PANEL, Center Pillar
					Right
	J576 5204	1			Almond
	J575 5004	1			Beige
	J575 4506	1			Black
	J575 4508	1			Blue, 1981
	J576 0098	1			Blue, 1982
	J576 6110	1			Garnet
	J576 6108	1			Honey
	J575 5006	1			Nutmeg, 1981-83
	J576 5202	1			Nutmeg, 1984-85
					Left
	J576 5205	1			Almond
	J575 5005	1			Beige
	J575 4505	1			Black
	J575 4507	1			Blue, 1981
	J576 0099	1			Blue, 1982
	J576 6111	1			Garnet
	J576 6109	1			Honey
	J575 5007	1			Nutmeg, 1981-83
	J576 5203	1			Nutmeg, 1984-85

MODEL CODES

16=Cherokee 2 Dr.(1981-83)
17=Cherokee 2 Dr.(1981-83)
73=Cherokee 2WD-2 Dr.(1984-86)
74=Cherokee 2WD-4 Dr.(1984-86)
18=Cherokee 4 Dr.(1981-83)
77=Cherokee 4WD-2 Dr.(1984-86)
78=Cherokee 4WD-4 Dr.(1984-86)
85=CJ-5 (1981-83)
86=CJ-6(1981)
87=CJ-7(1981-86)
88=CJ-8, Scrambler(1981-86)
64=Comanche 2WD-6 Ft. Box(1986)
66=Comanche 2WD-7 Ft. Box(1986)
63=Comanche 4WD-6 Ft. Box(1986)
65=Comanche 4WD-7 Ft. Box(1986)
15=Grand Wagoneer 4 Dr.(1984-86)
25=J-10 Truck 7 Ft. Box(1981-84)
26=J10 Truck 8 Ft. Box(1981-86)
27=J-20 Truck 8 Ft. Box(1981-86)
15=Wagoneer 4 Dr.(1981-83)
75=Wagoneer 4WD-4 Dr.(1984-86)

BODY
CJ=CJ-5, CJ-6, CJ-7, CJ-8, Scrambler(1981-86)
MJ=Comanche Pickup(1986)

STYLES
SJ=Wagoneer(1981-83), Grand Wagoneer(1984-86), Cherokee(1981-83), J-10, J-20(1981-86)
XJ=Wagoneer(1984-86), Cherokee(1984-86)

AR = Use as Required - = Non Illustrated Part P.A.R. = Paint as Required

PANELS, INTERIOR TRIM 4 DOOR WAGON SJ CHEROKEE, SJ WAGONEER
Figure 48-700

81J 048 700

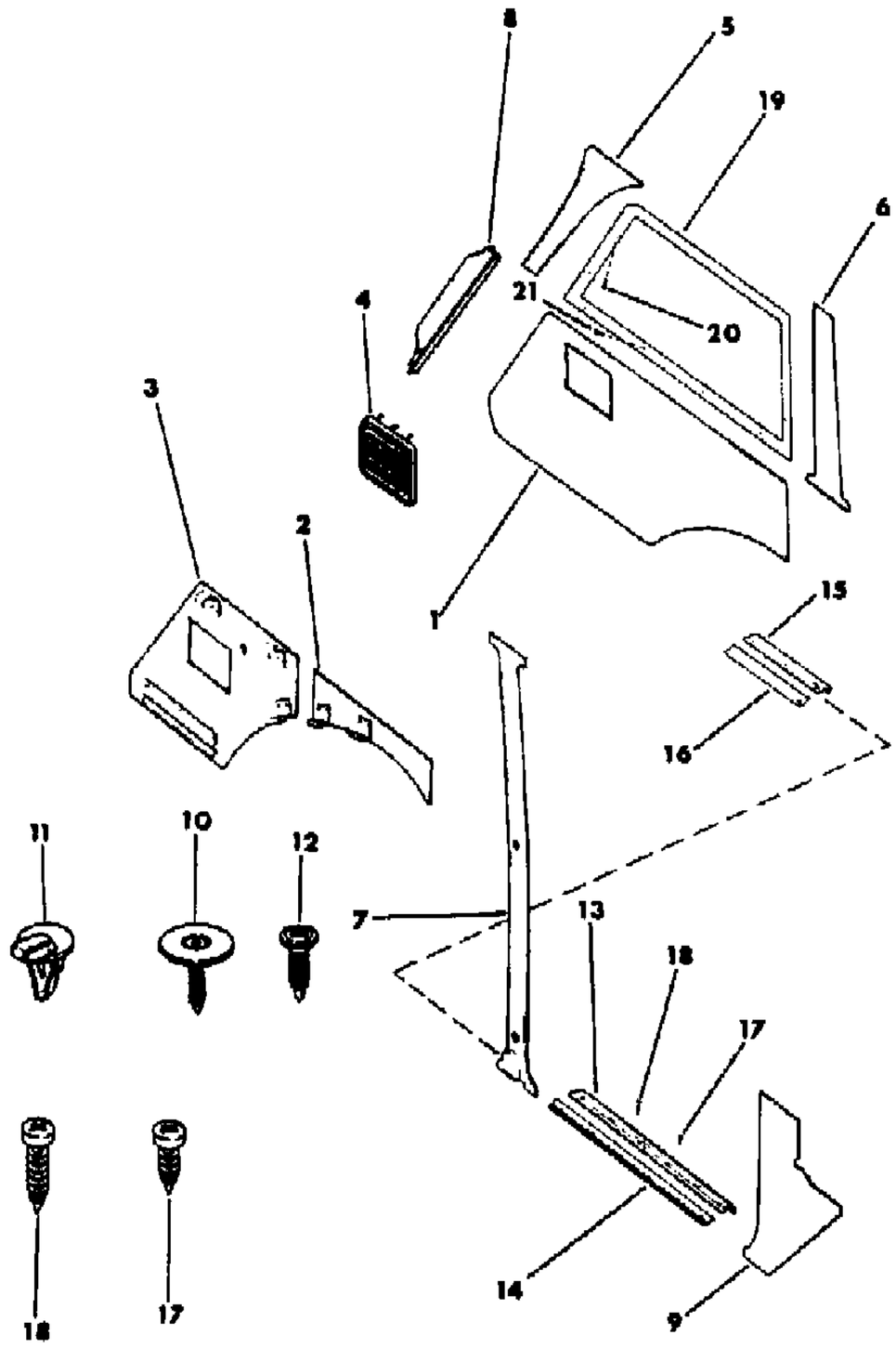

ITEM	PART NUMBER	QTY	BODY	MODEL	DESCRIPTION
8					COVER, "D" Pillar
	J576 5512	1			Right
	J576 5511	1			Left
9					PANEL, Cowl Trim
					Right
	J576 4522	1			Almond
	J098 8536	1			Black
	J546 5118	1			Blue, 1981
	J576 0114	1			Blue, 1982
	J575 4976	1			Brown
	J576 5212	1			Garnet
	J576 5210	1			Honey
	J575 4978	1			Nutmeg
					Left
	J576 4523	1			Almond
	J575 7615	1			Black
	J575 7617	1			Blue, 1981
	J576 0115	1			Blue, 1982
	J575 4977	1			Brown
	J576 5213	1			Garnet
	J576 5211	1			Honey
	J575 4979	1			Nutmeg
10	3420 2419	4			SCREW
11	J400 4047	10			CLIP, Trim Panel
12	J097 4764	4			SCREW
13	J546 8673	2			PLATE, Scuff
14	J545 0534	2			PLATE, Scuff
15	J546 8674	2			PLATE, Scuff
16	J545 0535	2			PLATE, Scuff
17	J400 4924	1			SCREW
18	J400 1499	1			SCREW
19					MOULDING, Quarter Window, P.A.R.
	J095 7852	1			Right
	J095 7851	1			Left
20	J400 4938	14			SCREW
21	J016 8626	8			SCREW

MODEL CODES

16=Cherokee 2 Dr.(1981-83)
17=Cherokee 2 Dr.(1981-83)
73=Cherokee 2WD-2 Dr.(1984-86)
74=Cherokee 2WD-4 Dr.(1984-86)
18=Cherokee 4 Dr.(1981-83)
77=Cherokee 4WD-2 Dr.(1984-86)
78=Cherokee 4WD-4 Dr.(1984-86)
85=CJ-5 (1981-83)
86=CJ-6(1981)
87=CJ-7(1981-86)
88=CJ-8, Scrambler(1981-86)
64=Comanche 2WD-6 Ft. Box(1986)
66=Comanche 2WD-7 Ft. Box(1986)
63=Comanche 4WD-6 Ft. Box(1986)
65=Comanche 4WD-7 Ft. Box(1986)
15=Grand Wagoneer 4 Dr.(1984-86)
25=J-10 Truck 7 Ft. Box(1981-84)
26=J10 Truck 8 Ft. Box(1981-86)
27=J-20 Truck 8 Ft. Box(1981-86)
15=Wagoneer 4 Dr.(1981-83)
75=Wagoneer 4WD-4 Dr.(1984-86)

BODY
CJ=CJ-5, CJ-6, CJ-7, CJ-8, Scrambler(1981-86)
MJ=Comanche Pickup(1986)

STYLES
SJ=Wagoneer(1981-83), Grand Wagoneer(1984-86), Cherokee(1981-83), J-10, J-20(1981-86)
XJ=Wagoneer(1984-86), Cherokee(1984-86)

AR = Use as Required - = Non Illustrated Part P.A.R. = Paint as Required

« RETURN TO GROUP INDEX

81J 048 800

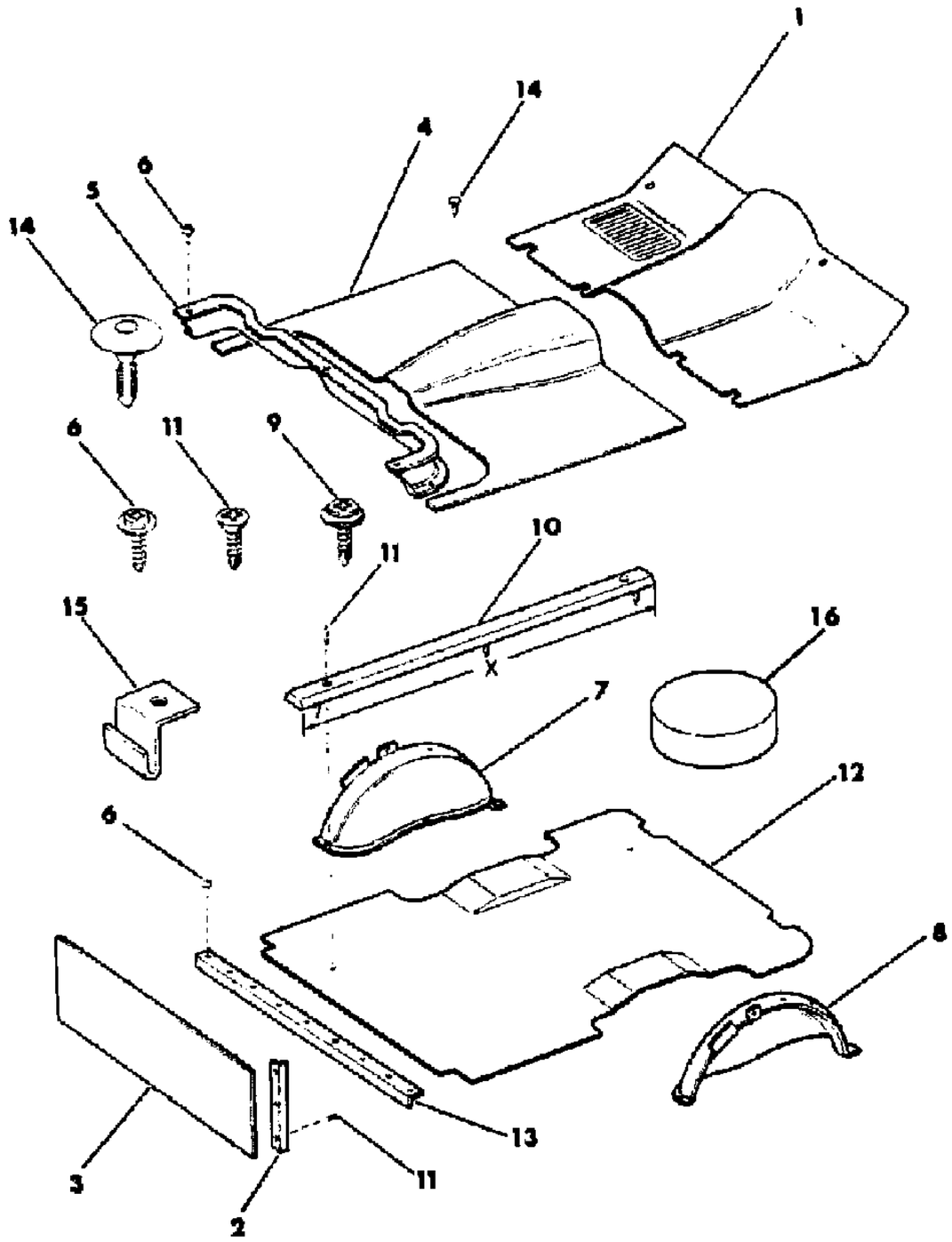

ITEM	PART NUMBER	QTY	BODY	MODEL	DESCRIPTION
1					CARPET, Floor
					Right Hand Drive
	9500 0381	1			Almond, without Shag Carpet
	9500 0382	1			Almond, with Shag Carpet
	J575 7463	1			Black, without Shag Carpet, 1981
	J805 1629	1			Black, without Shag Carpet, 1982
	J575 7467	1			Black, with Shag Carpet, 1981
	J805 1633	1			Black, with Shag Carpet, 1982
	J575 7464	1			Blue, 1981
	J805 1630	1			Blue, 1982
	J575 7465	1			Medium Brown, without Shag Carpet, 1981
	J805 1631	1			Medium Brown, without Shag Carpet, 1982
	J805 1634	1			Medium Brown, with Shag Carpet
	9500 0632	1			Honey, without Shag Carpet
	9500 0635	1			Honey, with Shag Carpet
	J575 7466	1			Nutmeg, without Shag Carpet, 1981
	J805 1632	1			Nutmeg, without Shag Carpet, 1982
	J575 7468	1			Nutmeg, with Shag Carpet, 1981
	J805 1635	1			Nutmeg, with Shag Carpet, 1982
					Left Hand Drive
	J576 5000	1			Almond, without Shag Carpet
	J576 5004	1			Almond, with Shag Carpet
	J575 5089	1			Black, without Extra Quiet Insulation, 1981
	J576 0275	1			Black, without Extra Quiet Insulation, 1982
	J575 5729	1			Black, with Extra Quiet Insulation, without Shag Carpet, 1981
	J576 0305	1			Black, with Shag Carpet
	J575 5090	1			Blue, without Extra Quiet Insulation, 1981
	J576 0276	1			Blue, without Extra Quiet Insulation, 1982
	J575 5730	1			Blue, with Extra Quiet Insulation
	J575 5091	1			Medium Brown, without Extra Quiet Insulation, 1981
	J576 0278	1			Medium Brown, without Extra Quiet Insulation, 1982
	J575 5731	1			Medium Brown, with Extra Quiet Insulation, without Shag Carpet, 1981
	J576 0306	1			Medium Brown, with Shag Carpet, 1982
	J576 6233	1			Garnet
	J576 6237	1			Honey, without Shag Carpet
	J576 6235	1			Honey, with Shag Carpet
	J575 5092	1			Nutmeg, without Extra Quiet Insulation, 1981
	J576 0277	1			Nutmeg, without Extra Quiet Insulation, 1982

MODEL CODES
16=Cherokee 2 Dr.(1981-83)
17=Cherokee 2 Dr.(1981-83)
73=Cherokee 2WD-2 Dr.(1984-86)
74=Cherokee 2WD-4 Dr.(1984-86)
18=Cherokee 4 Dr.(1981-83)
77=Cherokee 4WD-2 Dr.(1984-86)
78=Cherokee 4WD-4 Dr.(1984-86)
85=CJ-5 (1981-83)
86=CJ-6(1981)
87=CJ-7(1981-86)
88=CJ-8, Scrambler(1981-86)
64=Comanche 2WD-6 Ft. Box(1986)
66=Comanche 2WD-7 Ft. Box(1986)
63=Comanche 4WD-6 Ft. Box(1986)
65=Comanche 4WD-7 Ft. Box(1986)
15=Grand Wagoneer 4 Dr.(1984-86)
25=J-10 Truck 7 Ft. Box(1981-84)
26=J10 Truck 8 Ft. Box(1981-86)
27=J-20 Truck 8 Ft. Box(1981-86)
15=Wagoneer 4 Dr.(1981-83)
75=Wagoneer 4WD-4 Dr.(1984-86)

BODY
CJ=CJ-5, CJ-6, CJ-7, CJ-8, Scrambler(1981-86)
MJ=Comanche Pickup(1986)

STYLES
SJ=Wagoneer(1981-83), Grand Wagoneer(1984-86), Cherokee(1981-83), J-10, J-20(1981-86)
XJ=Wagoneer(1984-86), Cherokee(1984-86)

AR = Use as Required - = Non Illustrated Part P.A.R. = Paint as Required

81J 048 800

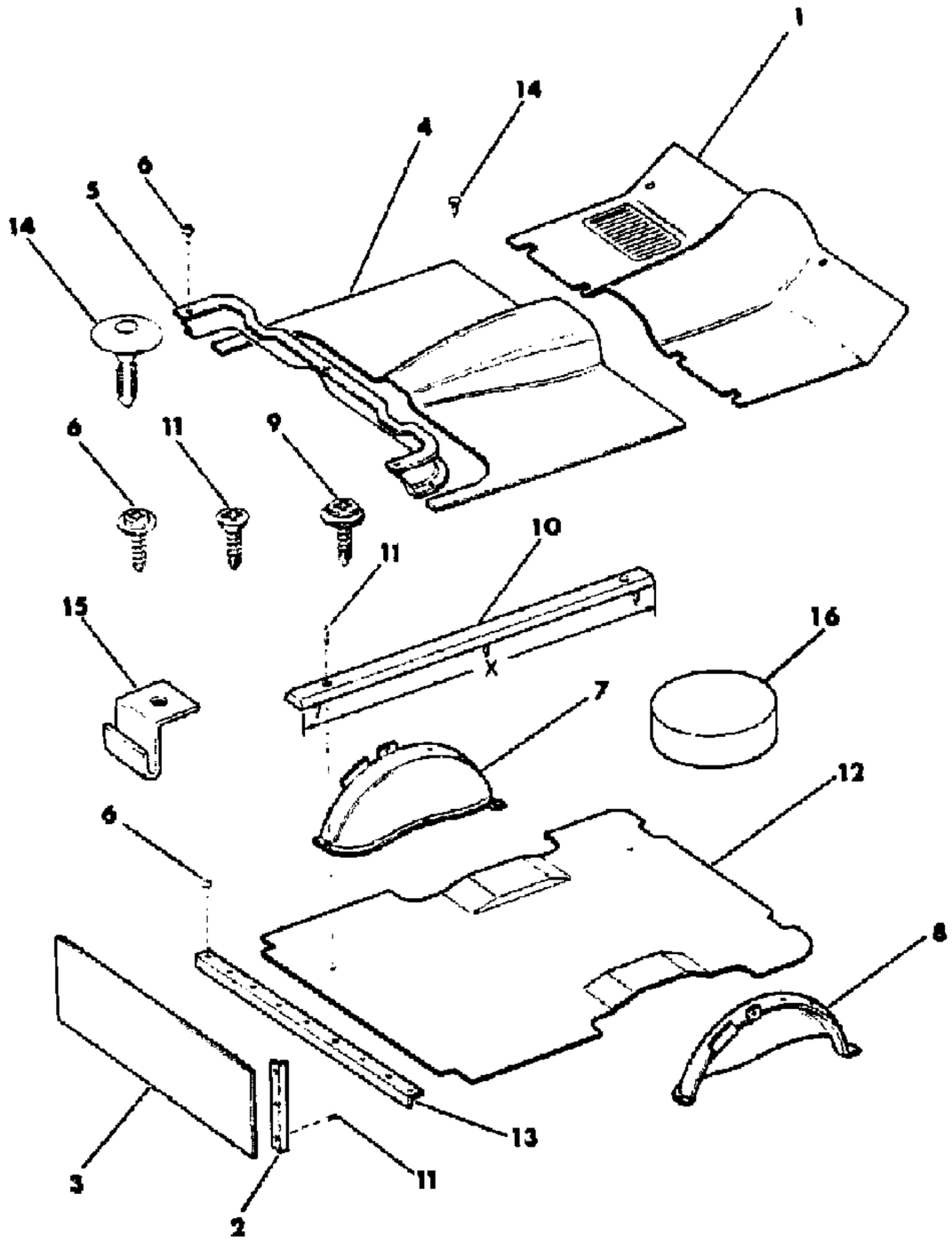

ITEM	PART NUMBER	QTY	BODY	MODEL	DESCRIPTION
	J575 5733	1			Nutmeg, with Extra Quiet Insulation, without Shag Carpet, 1981
	J575 5113	1			Nutmeg, with Shag Carpet, 1981
	J576 0307	1			Nutmeg, with Shag Carpet, 1982
					MAT, Front Floor
	J575 3422	1			Black, 1981
	J576 0268	1			Black, 1982
	J575 3423	1			Blue, 1981
	J576 0269	1			Blue, 1982
	J575 5093	1			Medium Brown, 1981
	J576 0271	1			Medium Brown, 1982
2	J545 5777	7			STRIP, Skid ***
3					CARPET, Tailgate
	J576 5013	1			Almond, without Shag Carpet
	J576 5015	1			Almond, with Shag Carpet
	J575 5042	1			Black, without Shag Carpet
	J575 0549	1			Black, with Shag Carpet
	J575 5043	1			Blue, 1981
	J576 0112	1			Blue, 1982
	J575 5044	1			Medium Brown, without Shag Carpet
	J575 5046	1			Medium Brown, with Shag Carpet
	J576 6288	1			Garnet
	J576 6287	1			Honey, without Shag Carpet
	J576 6289	1			Honey, with Shag Carpet
	J575 5045	1			Nutmeg, without Shag Carpet
	J575 5047	1			Nutmeg, with Shag Carpet
4					CARPET, Rear
	J576 5001	1			Almond, without Shag Carpet
	J576 5005	1			Almond, with Shag Carpet
	J575 5095	1			Black, without Shag Carpet
	J575 5737	1			Black, Shag Carpet
	J575 3433	1			Blue, 1981
	J576 0272	1			Blue, 1982
	J575 5096	1			Blue, 1981
	J576 0308	1			Blue, 1982
	J575 5097	1			Medium Brown, without Shag Carpet
	J575 5114	1			Medium Brown, with Shag Carpet
	J576 6234	1			Garnet
	J576 6240	1			Honey, without Shag Carpet
	J576 6236	1			Honey, with Shag Carpet

MODEL CODES

16=Cherokee 2 Dr.(1981-83)	78=Cherokee 4WD-4 Dr.(1984-86)	64=Comanche 2WD-6 Ft. Box(1986)	25=J-10 Truck 7 Ft. Box(1981-84)
17=Cherokee 2 Dr.(1981-83)	85=CJ-5 (1981-83)	66=Comanche 2WD-7 Ft. Box(1986)	26=J10 Truck 8 Ft. Box(1981-86)
73=Cherokee 2WD-2 Dr.(1984-86)	86=CJ-6(1981)	63=Comanche 4WD-6 Ft. Box(1986)	27=J-20 Truck 8 Ft. Box(1981-86)
74=Cherokee 2WD-4 Dr.(1984-86)	87=CJ-7(1981-86)	65=Comanche 4WD-7 Ft. Box(1986)	15=Wagoneer 4 Dr.(1981-83)
18=Cherokee 4 Dr.(1981-83)	88=CJ-8, Scrambler(1981-86)	15=Grand Wagoneer 4 Dr.(1984-86)	75=Wagoneer 4WD-4 Dr.(1984-86)
77=Cherokee 4WD-2 Dr.(1984-86)			

BODY
CJ=CJ-5, CJ-6, CJ-7, CJ-8, Scrambler(1981-86)
MJ=Comanche Pickup(1986)

STYLES
SJ=Wagoneer(1981-83), Grand Wagoneer(1984-86), Cherokee(1981-83), J-10, J-20(1981-86)
XJ=Wagoneer(1984-86), Cherokee(1984-86)

AR = Use as Required - = Non Illustrated Part P.A.R. = Paint as Required

81J 048 800

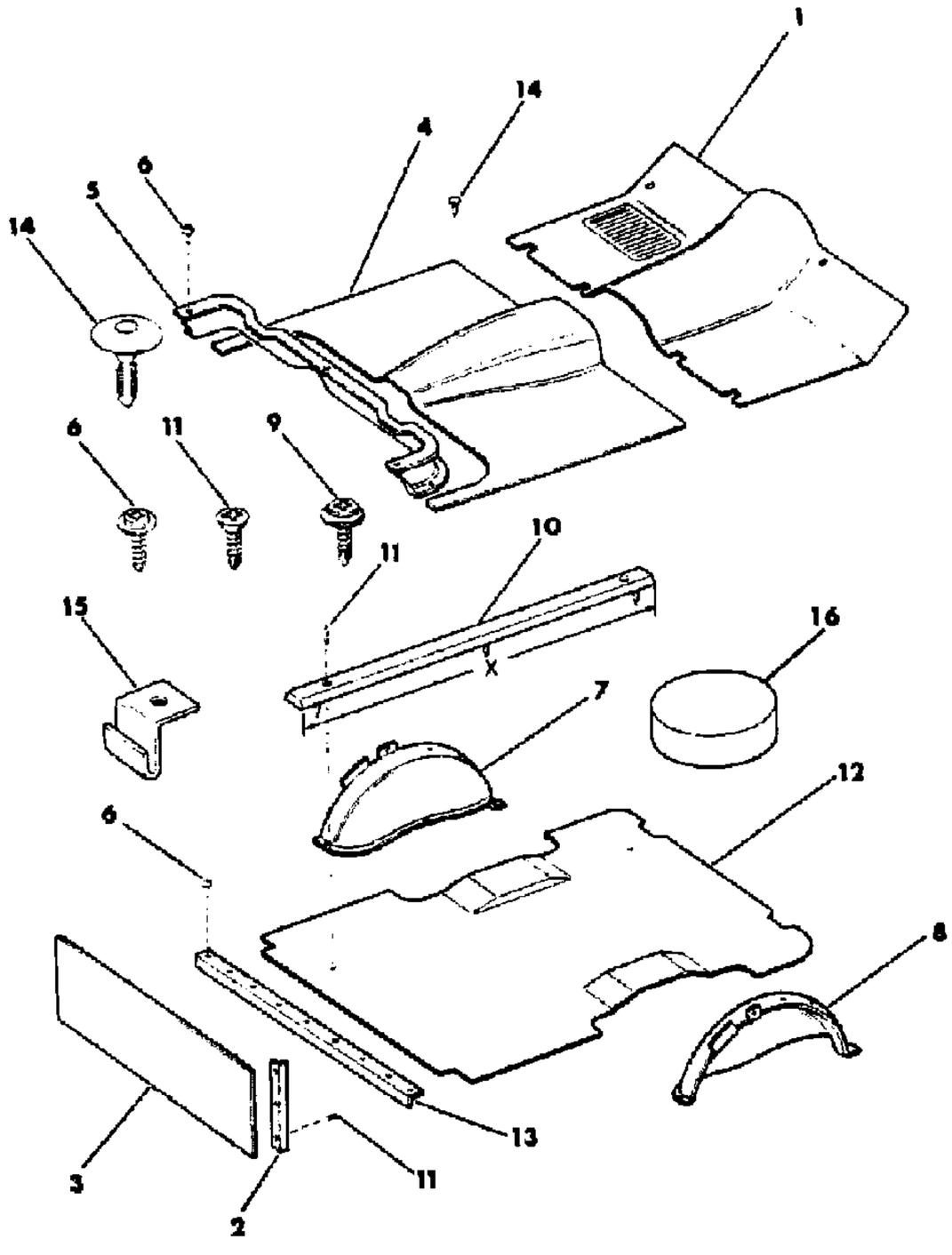

ITEM	PART NUMBER	QTY	BODY	MODEL	DESCRIPTION
	J575 5098	1			Nutmeg, without Shag Carpet
	J575 5115	1			Nutmeg, without Shag Carpet
					MAT, Rear Floor
	J575 3432	1			Black
	J575 3433	1			Blue, 1981
	J576 0272	1			Blue, 1982
	J575 5099	1			Medium Brown
5					PANEL, Trim
	J576 5006	1			Almond
	J097 5748	1			Black, Plastic
	J575 5250	1			Black, Carpet, without Shag Carpet
	J575 0545	1			Black, Carpet, with Shag Carpet
	J546 5102	1			Blue, Plastic, 1981
	J576 0347	1			Blue, Plastic, 1982
	J575 5251	1			Blue, Carpet, 1981
	J576 0350	1			Blue, Carpet, 1982
	J575 5241	1			Medium Brown, Plastic
	J575 5252	1			Medium Brown, Carpet, without Shag Carpet
	J575 5260	1			Medium Brown Carpet, with Shag Carpet
	J576 6281	1			Garnet
	J576 6280	1			Honey, without Shag Carpet
	J576 6282	1			Honey, with Shag Carpet
	J575 5240	1			Nutmeg, Plastic
	J575 5253	1			Nutmeg, Carpet, without Shag Carpet
	J575 5261	1			Nutmeg, Carpet, with Shag Carpet
6					SCREW
	J097 4764	AR			.50"
	J098 7206	AR			.56"
7					COVER, Wheelhouse
	J576 5071	1			Almond, without Shag Carpet
	J576 5073	1			Almond, with Shag Carpet
	J575 4981	1			Black, without Extra Quiet Insulation
	J575 4989	1			Black, with Extra Quiet Insulation, without Shag Carpet
	J575 0735	1			Black, with Shag Carpet
	J575 4983	1			Blue, without Extra Quiet Insulation, 1981
	J576 0469	1			Blue, without Extra Quiet Insulation, 1982
	J575 4991	1			Blue, with Extra Quiet Insulation, 1981
	J576 0471	1			Blue, with Extra Quiet Insulation, 1982
	J575 4985	1			Medium Brown, without Extra Quiet Insulation

MODEL CODES

16=Cherokee 2 Dr.(1981-83)	78=Cherokee 4WD-4 Dr.(1984-86)	64=Comanche 2WD-6 Ft. Box(1986)	25=J-10 Truck 7 Ft. Box(1981-84)
17=Cherokee 2 Dr.(1981-83)	85=CJ-5 (1981-83)	66=Comanche 2WD-7 Ft. Box(1986)	26=J10 Truck 8 Ft. Box(1981-86)
73=Cherokee 2WD-2 Dr.(1984-86)	86=CJ-6(1981)	63=Comanche 4WD-6 Ft. Box(1986)	27=J-20 Truck 8 Ft. Box(1981-86)
74=Cherokee 2WD-4 Dr.(1984-86)	87=CJ-7(1981-86)	65=Comanche 4WD-7 Ft. Box(1986)	15=Wagoneer 4 Dr.(1981-83)
18=Cherokee 4 Dr.(1981-83)	88=CJ-8, Scrambler(1981-86)	15=Grand Wagoneer 4 Dr.(1984-86)	75=Wagoneer 4WD-4 Dr.(1984-86)
77=Cherokee 4WD-2 Dr.(1984-86)			

BODY
CJ=CJ-5, CJ-6, CJ-7, CJ-8, Scrambler(1981-86)
MJ=Comanche Pickup(1986)

STYLES
SJ=Wagoneer(1981-83), Grand Wagoneer(1984-86), Cherokee(1981-83), J-10, J-20(1981-86)
XJ=Wagoneer(1984-86), Cherokee(1984-86)

AR = Use as Required - = Non Illustrated Part P.A.R. = Paint as Required

81J 048 800

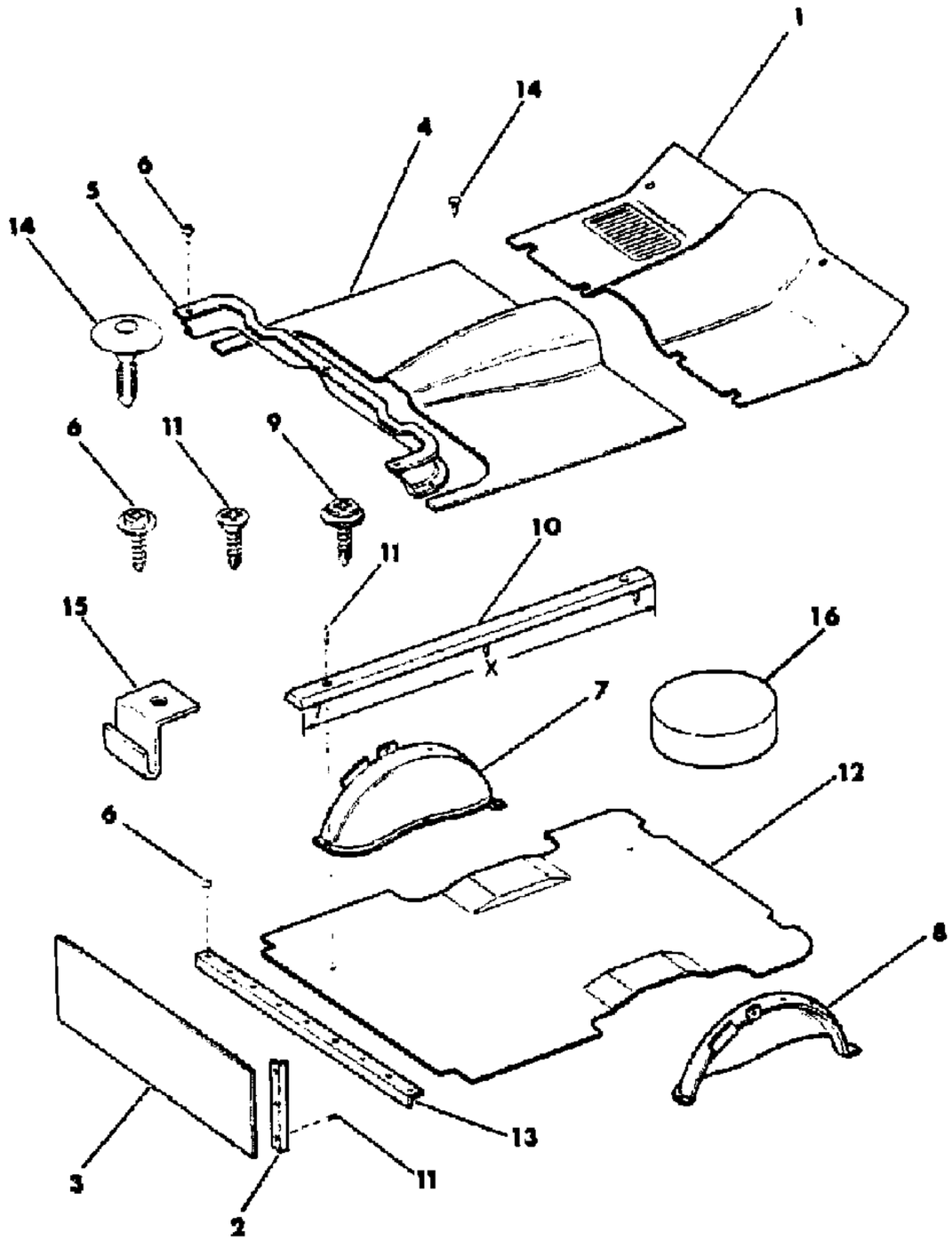

ITEM	PART NUMBER	QTY	BODY	MODEL	DESCRIPTION
	J575 4993	1			Medium Brown, with Extra Quiet Insulation, without Shag Carpet
	J575 5017	1			Medium Brown, with Shag Carpet
	J576 6121	1			Garnet
	J576 6117	1			Honey, without Extra Quiet Insulation
	J576 6119	1			Honey, with Extra Quiet Insulation, without Shag Carpet
	J576 6123	1			Honey, with Shag Carpet
	J575 4987	1			Nutmeg, without Extra Quiet Insulation
	J545 4995	1			Nutmeg, with Extra Quiet Insulation
	J575 5019	1			Nutmeg, with Shag Carpet
8					COVER, Wheelhouse
	J576 5070	1			Almond, without Shag Carpet
	J576 5072	1			Almond, with Shag Carpet
	J575 4980	1			Black, without Extra Quiet Insulation
	J575 4988	1			Black, with Extra Quiet Insulation, without Shag Carpet
	J575 0736	1			Black, with Shag Carpet
	J575 4982	1			Blue, without Extra Quiet Insulation, 1981
	J576 0467	1			Blue, without Extra Quiet Insulation, 1982
	J575 4990	1			Blue, with Extra Quiet Insulation, 1981
	J576 0470	1			Blue, with Extra Quiet Insulation, 1982
	J575 4984	1			Medium Brown, without Extra Quiet Insulation
	J575 4992	1			Medium Brown, with Extra Quiet Insulation, without Shag Carpet
	J575 5016	1			Medium Brown, with Shag Carpet
	J576 6120	1			Garnet
	J576 6116	1			Honey, without Extra Quiet Insulation
	J576 6118	1			Honey, with Extra Quiet Insulation, without Shag Carpet
	J576 6122	1			Honey, with Shag Carpet
	J575 4986	1			Nutmeg, without Extra Quiet Insulation
	J575 4994	1			Nutmeg, with Extra Quiet Insulation, without Shag Carpet
	J575 5018	1			Nutmeg, with Shag Carpet
9	J400 1776	12			SCREW
10					STRIP, Skid ***
	J545 6616	2			17" Length
	J545 6615	2			26" Length
	J545 5576	1			48" Length
11	J400 4955	28			SCREW
12					CARPET, Cargo
	J576 5008	1			Almond, without Shag Carpet

MODEL CODES

16=Cherokee 2 Dr.(1981-83)	78=Cherokee 4WD-4 Dr.(1984-86)	64=Comanche 2WD-6 Ft. Box(1986)	25=J-10 Truck 7 Ft. Box(1981-84)
17=Cherokee 2 Dr.(1981-83)	85=CJ-5 (1981-83)	66=Comanche 2WD-7 Ft. Box(1986)	26=J10 Truck 8 Ft. Box(1981-86)
73=Cherokee 2WD-2 Dr.(1984-86)	86=CJ-6(1981)	63=Comanche 4WD-6 Ft. Box(1986)	27=J-20 Truck 8 Ft. Box(1981-86)
74=Cherokee 2WD-4 Dr.(1984-86)	87=CJ-7(1981-86)	65=Comanche 4WD-7 Ft. Box(1986)	15=Wagoneer 4 Dr.(1981-83)
18=Cherokee 4 Dr.(1981-83)	88=CJ-8, Scrambler(1981-86)	15=Grand Wagoneer 4 Dr.(1984-86)	75=Wagoneer 4WD-4 Dr.(1984-86)
77=Cherokee 4WD-2 Dr.(1984-86)			

BODY
CJ=CJ-5, CJ-6, CJ-7, CJ-8, Scrambler(1981-86)
MJ=Comanche Pickup(1986)

STYLES
SJ=Wagoneer(1981-83), Grand Wagoneer(1984-86), Cherokee(1981-83), J-10, J-20(1981-86)
XJ=Wagoneer(1984-86), Cherokee(1984-86)

AR = Use as Required - = Non Illustrated Part P.A.R. = Paint as Required

CARPETS AND MATS SJ CHEROKEE, SJ WAGONEER, J10, J20
Figure 48-800

81J 048 800

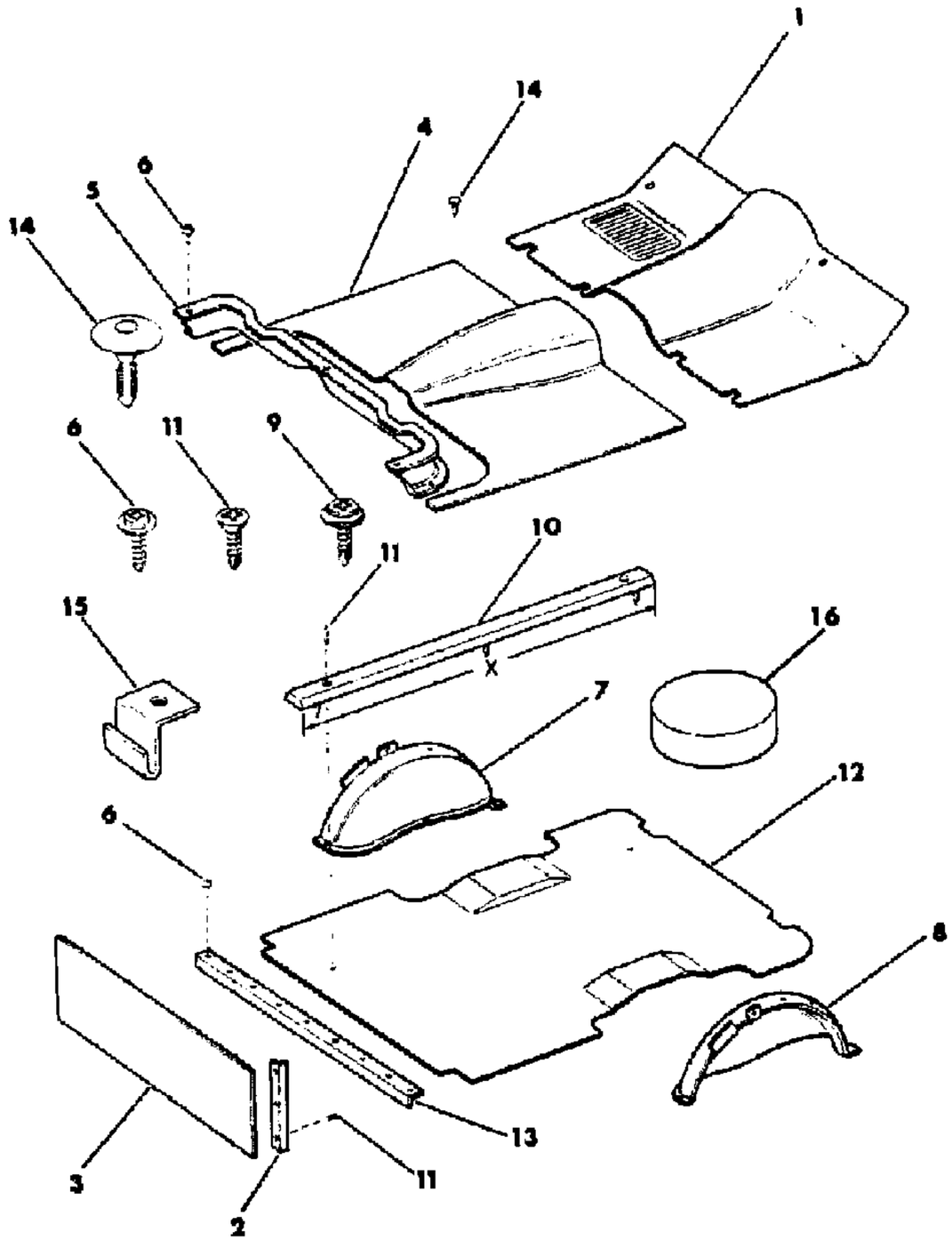

ITEM	PART NUMBER	QTY	BODY	MODEL	DESCRIPTION
	J576 5010	1			Almond, with Shag Carpet
	J575 5246	1			Black, without Shag Carpet
	J575 0547	1			Black, with Shag Carpet
	J575 5247	1			Blue, 1981
	J576 0349	1			Blue, 1982
	J575 5248	1			Medium Brown, without Shag Carpet
	J575 5256	1			Medium Brown, with Shag Carpet
	J576 6278	1			Garnet
	J576 6279	1			Honey, w/Shag Carpet
	J576 6277	1			Honey, with Shag Carpet (w/Shag)
	J575 5249	1			Nutmeg, without Shag Carpet
	J575 5257	1			Nutmeg, with Shag Carpet
					MAT, Rear Cargo
	J545 1847	1			Black
	J546 5100	1			Blue, 1981
	J576 0346	1			Blue, 1982
	J575 5239	1			Medium Brown
	J575 5238	1			Nutmeg
13	J096 6036	1			RETAINER
14					PLUG
	J400 6117	AR			Blue
	J400 4875	AR			Black, P.A.R.
15	J545 5596	6			BRACKET, Support
16					COVER, Spare Tire
					With Production Size Spare Tire
	J576 4899	1			Almond
	J575 0477	1			Beige
	J546 9597	1			Black
	J546 9598	1			Blue, 1981
	J576 0472	1			Blue, 1982
	J576 6124	1			Garnet
	J576 6125	1			Honey
	J575 4974	1			Nutmeg
					With Space Saver Spare Tire
	J576 4900	1			Almond
	J575 7942	1			Beige, 1981
	J576 0905	1			Beige, 1982
	J575 7939	1			Black, 1981
	J576 0902	1			Black, 1982

MODEL CODES

16=Cherokee 2 Dr.(1981-83)
17=Cherokee 2 Dr.(1981-83)
73=Cherokee 2WD-2 Dr.(1984-86)
74=Cherokee 2WD-4 Dr.(1984-86)
18=Cherokee 4 Dr.(1981-83)
77=Cherokee 4WD-2 Dr.(1984-86)
78=Cherokee 4WD-4 Dr.(1984-86)
85=CJ-5 (1981-83)
86=CJ-6(1981)
87=CJ-7(1981-86)
88=CJ-8, Scrambler(1981-86)
64=Comanche 2WD-6 Ft. Box(1986)
66=Comanche 2WD-7 Ft. Box(1986)
63=Comanche 4WD-6 Ft. Box(1986)
65=Comanche 4WD-7 Ft. Box(1986)
15=Grand Wagoneer 4 Dr.(1984-86)
25=J-10 Truck 7 Ft. Box(1981-84)
26=J10 Truck 8 Ft. Box(1981-86)
27=J-20 Truck 8 Ft. Box(1981-86)
15=Wagoneer 4 Dr.(1981-83)
75=Wagoneer 4WD-4 Dr.(1984-86)

BODY
CJ=CJ-5, CJ-6, CJ-7, CJ-8, Scrambler(1981-86)
MJ=Comanche Pickup(1986)

STYLES
SJ=Wagoneer(1981-83), Grand Wagoneer(1984-86), Cherokee(1981-83), J-10, J-20(1981-86)
XJ=Wagoneer(1984-86), Cherokee(1984-86)

AR = Use as Required - = Non Illustrated Part P.A.R. = Paint as Required

81J 048 800

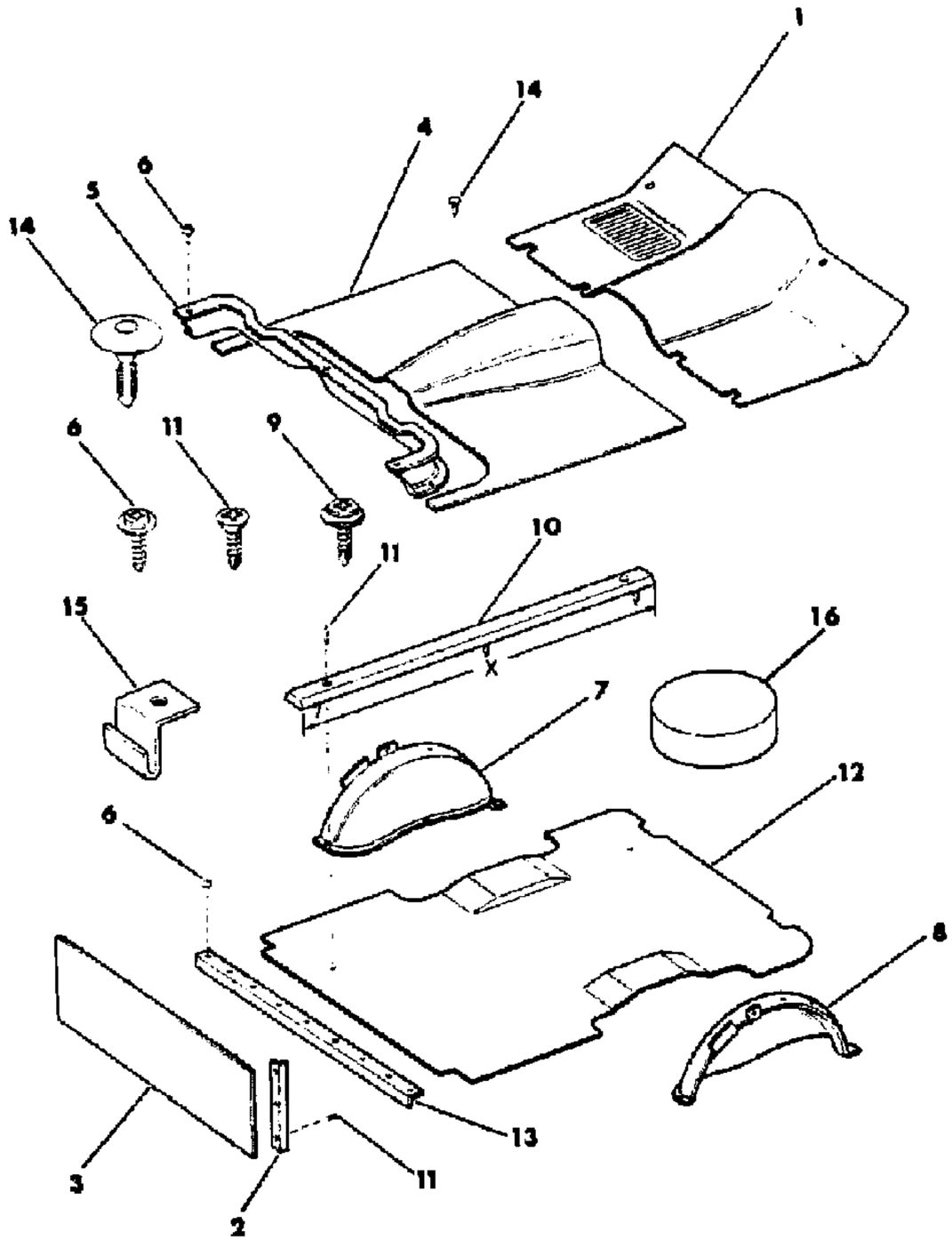

ITEM	PART NUMBER	QTY	BODY	MODEL	DESCRIPTION
	J575 7940	1			Blue, 1981
	J576 0903	1			Blue, 1982
	J576 6126	1			Garnet
	J576 6127	1			Honey
	J575 7941	1			Nutmeg, 1981
	J576 0904	1			Nutmeg, 1982

MODEL CODES
16=Cherokee 2 Dr.(1981-83)
17=Cherokee 2 Dr.(1981-83)
73=Cherokee 2WD-2 Dr.(1984-86)
74=Cherokee 2WD-4 Dr.(1984-86)
18=Cherokee 4 Dr.(1981-83)
77=Cherokee 4WD-2 Dr.(1984-86)
78=Cherokee 4WD-4 Dr.(1984-86)
85=CJ-5 (1981-83)
86=CJ-6(1981)
87=CJ-7(1981-86)
88=CJ-8, Scrambler(1981-86)
64=Comanche 2WD-6 Ft. Box(1986)
66=Comanche 2WD-7 Ft. Box(1986)
63=Comanche 4WD-6 Ft. Box(1986)
65=Comanche 4WD-7 Ft. Box(1986)
15=Grand Wagoneer 4 Dr.(1984-86)
25=J-10 Truck 7 Ft. Box(1981-84)
26=J10 Truck 8 Ft. Box(1981-86)
27=J-20 Truck 8 Ft. Box(1981-86)
15=Wagoneer 4 Dr.(1981-83)
75=Wagoneer 4WD-4 Dr.(1984-86)

BODY
CJ=CJ-5, CJ-6, CJ-7, CJ-8, Scrambler(1981-86)
MJ=Comanche Pickup(1986)

STYLES
SJ=Wagoneer(1981-83), Grand Wagoneer(1984-86), Cherokee(1981-83), J-10, J-20(1981-86)
XJ=Wagoneer(1984-86), Cherokee(1984-86)

AR = Use as Required - = Non Illustrated Part P.A.R. = Paint as Required

CARPETS AND MATS J10, J20
Figure 48-900

81J 048 900

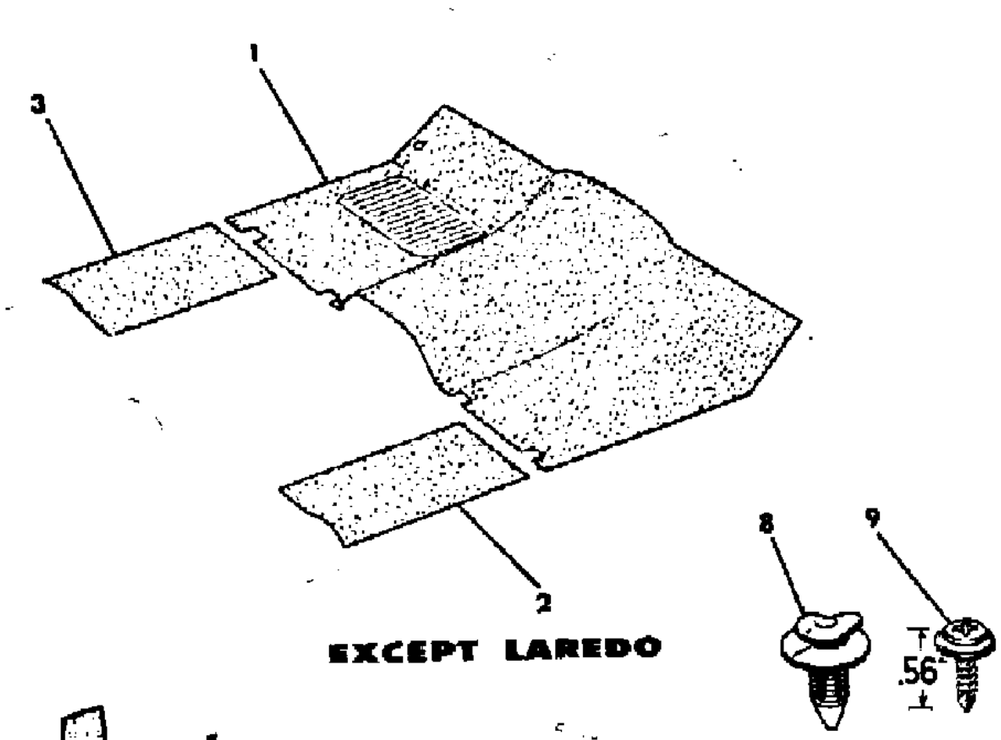

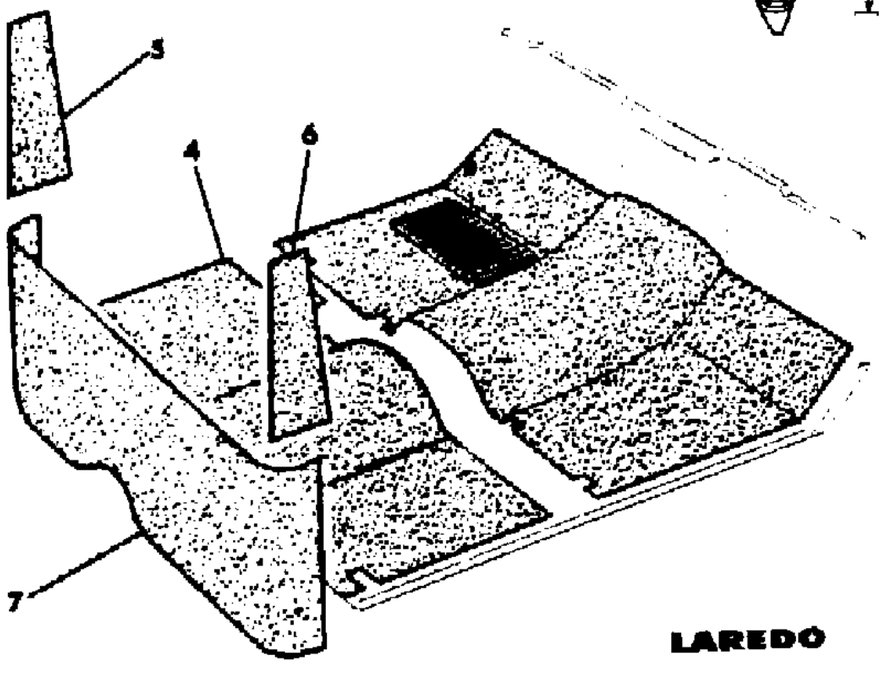

ITEM	PART NUMBER	QTY	BODY	MODEL	DESCRIPTION
1					CARPET, Floor
					Right Hand Drive
	9500 0381	1			Almond, without Shag Carpet
	9500 0382	1			Almond, with Shag Carpet
	J805 1629	1			Black, without Shag Carpet
	J805 1633	1			Black, with Shag Carpet
	J805 1630	1			Blue
	J805 1631	1			Medium Brown, without Shag Carpet
	J805 1634	1			Medium Brown, with Shag Carpet
	J805 1632	1			Nutmeg, without Shag Carpet
	J805 1635	1			Nutmeg, with Shag Carpet
					Left Hand Drive
	J576 5000	1			Almond
	J575 5089	1			Black, without Extra Quiet Insulation, 1981
	J576 0275	1			Black, without Extra Quiet Insulation, 1982-84
	J575 5729	1			Black, with Extra Quiet Insulation, without Shag Carpet, 1981
	J575 5736	1			Black, with Shag Carpet, 1981
	J576 0305	1			Black, with Shag Carpet, 1982-84
	J575 5090	1			Blue, without Extra Quiet Insulation, 1981
	J576 0276	1			Blue, without Extra Quiet Insulation, 1982-83
	J575 5730	1			Blue, with Extra Quiet Insulation, 1981
	J575 5091	1			Medium Brown, without Extra Quiet Insulation, 1981
	J576 0278	1			Medium Brown, without Extra Quiet Insulation, 1982-83
	J575 5731	1			Medium Brown, with Extra Quiet Insulation
	J576 6237	1			Honey
	J575 5092	1			Nutmeg, without Extra Quiet Insulation, 1981
	J575 5733	1			Nutmeg, with Extra Quiet Insulation, without Shag Carpet, 1981
	J575 5113	1			Nutmeg, with Shag Carpet, 1981
	J576 0307	1			Nutmeg, with Shag Carpet, 1982-85
					MAT, Front Floor
	J575 3422	1			Black, 1981
	J576 0268	1			Black, 1982-84
	J575 3423	1			Blue, 1981
	J576 0269	1			Blue, 1982-84
	J575 5093	1			Medium Brown, 1981
	J576 0271	1			Medium Brown, 1982-84
	J575 5094	1			Nutmeg, 1981
	J576 0270	1			Nutmeg, 1982
2					CARPET, Floor

MODEL CODES

16=Cherokee 2 Dr.(1981-83)	78=Cherokee 4WD-4 Dr.(1984-86)	64=Comanche 2WD-6 Ft. Box(1986)	25=J-10 Truck 7 Ft. Box(1981-84)
17=Cherokee 2 Dr.(1981-83)	85=CJ-5 (1981-83)	66=Comanche 2WD-7 Ft. Box(1986)	26=J10 Truck 8 Ft. Box(1981-86)
73=Cherokee 2WD-2 Dr.(1984-86)	86=CJ-6(1981)	63=Comanche 4WD-6 Ft. Box(1986)	27=J-20 Truck 8 Ft. Box(1981-86)
74=Cherokee 2WD-4 Dr.(1984-86)	87=CJ-7(1981-86)	65=Comanche 4WD-7 Ft. Box(1986)	15=Wagoneer 4 Dr.(1981-83)
18=Cherokee 4 Dr.(1981-83)	88=CJ-8, Scrambler(1981-86)	15=Grand Wagoneer 4 Dr.(1984-86)	75=Wagoneer 4WD-4 Dr.(1984-86)
77=Cherokee 4WD-2 Dr.(1984-86)			

BODY
CJ=CJ-5, CJ-6, CJ-7, CJ-8, Scrambler(1981-86)
MJ=Comanche Pickup(1986)

STYLES
SJ=Wagoneer(1981-83), Grand Wagoneer(1984-86), Cherokee(1981-83), J-10, J-20(1981-86)
XJ=Wagoneer(1984-86), Cherokee(1984-86)

AR = Use as Required - = Non Illustrated Part P.A.R. = Paint as Required

« RETURN TO GROUP INDEX »

81J 048 900

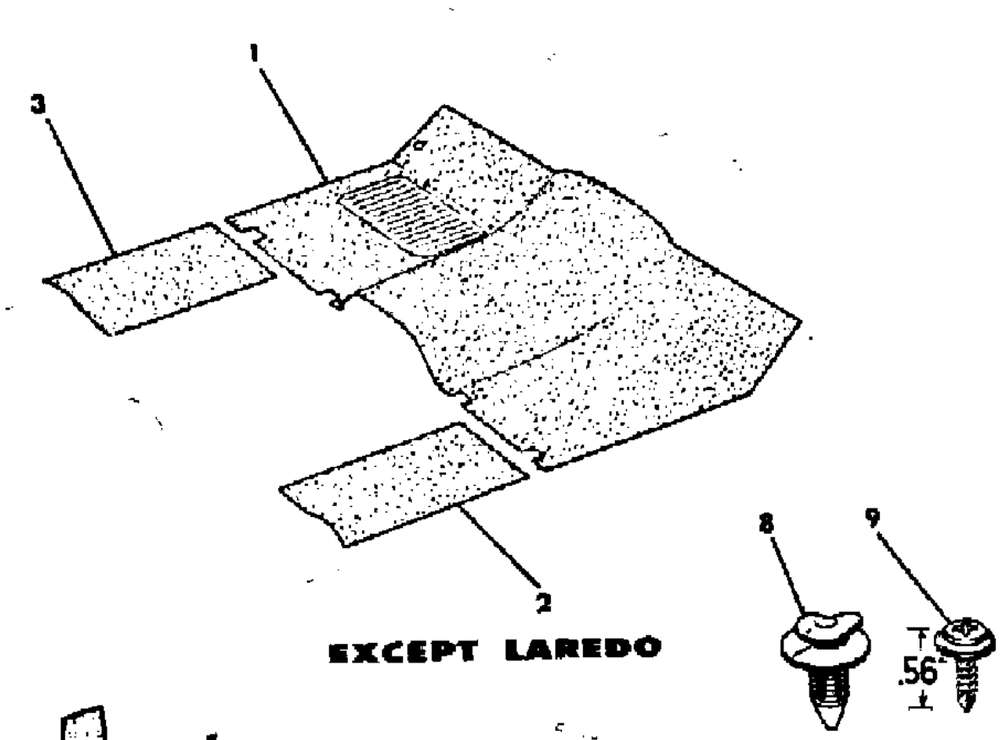

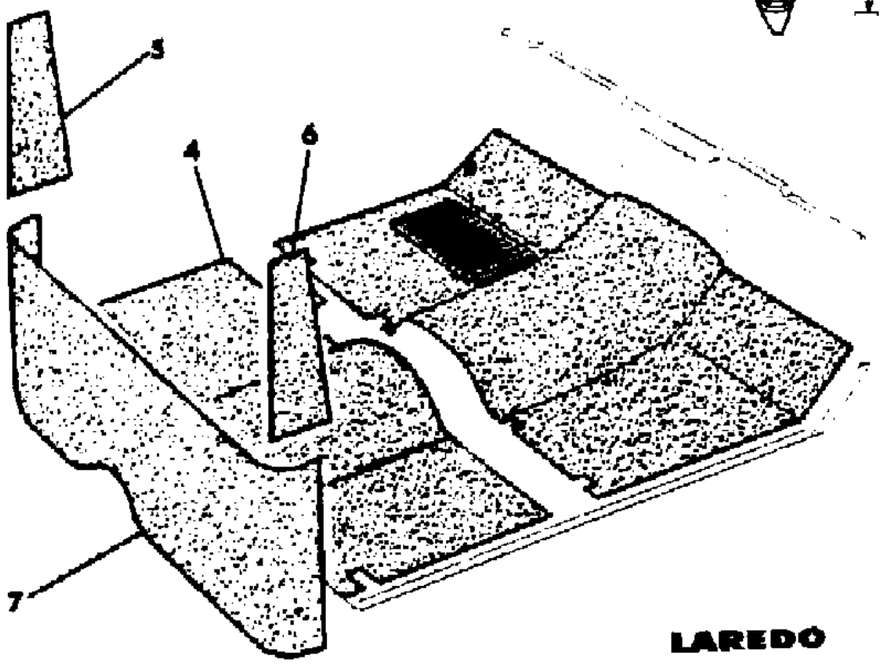

ITEM	PART NUMBER	QTY	BODY	MODEL	DESCRIPTION
	J576 5002	1			Almond
	J575 5104	1			Black
	J575 5106	1			Blue, 1981
	J576 0310	1			Blue, 1982-84
	J575 5108	1			Medium Brown
	J576 6242	1			Honey
	J575 5110	1			Nutmeg
					MAT, Front Carpet
	J575 2342	1			Black
	J546 4186	1			Blue, 1981
	J576 0312	1			Blue, 1982-84
	J575 5100	1			Medium Brown
	J575 5102	1			Nutmeg
3					CARPET, Floor
	J576 5003	1			Almond
	J575 5105	1			Black
	J575 5107	1			Blue, 1981
	J576 0311	1			Blue, 1982-84
	J575 5109	1			Medium Brown
	J576 6243	1			Honey
	J575 5111	1			Nutmeg
					MAT, Front Floor
	J546 4185	1			Black, 1981
	J545 2341	1			Black, 1982-86
	J576 0313	1			Blue, 1982-84
	J575 5101	1			Medium Brown
	J575 5103	1			Nutmeg
4					CARPET, Floor
	J575 0558	1			Black
	J575 5116	1			Nutmeg
5					CARPET, Side Trim
	J575 3217	1			Black
	J575 5035	1			Nutmeg
6					CARPET, Side Trim
	J575 3250	1			Black
	J575 5034	1			Nutmeg
7					CARPET, Rear
	J575 3210	1			Black
	J575 5031	1			Nutmeg

MODEL CODES

16=Cherokee 2 Dr.(1981-83)	78=Cherokee 4WD-4 Dr.(1984-86)	64=Comanche 2WD-6 Ft. Box(1986)	25=J-10 Truck 7 Ft. Box(1981-84)
17=Cherokee 2 Dr.(1981-83)	85=CJ-5 (1981-83)	66=Comanche 2WD-7 Ft. Box(1986)	26=J10 Truck 8 Ft. Box(1981-86)
73=Cherokee 2WD-2 Dr.(1984-86)	86=CJ-6(1981)	63=Comanche 4WD-6 Ft. Box(1986)	27=J-20 Truck 8 Ft. Box(1981-86)
74=Cherokee 2WD-4 Dr.(1984-86)	87=CJ-7(1981-86)	65=Comanche 4WD-7 Ft. Box(1986)	15=Wagoneer 4 Dr.(1981-83)
18=Cherokee 4 Dr.(1981-83)	88=CJ-8, Scrambler(1981-86)	15=Grand Wagoneer 4 Dr.(1984-86)	75=Wagoneer 4WD-4 Dr.(1984-86)
77=Cherokee 4WD-2 Dr.(1984-86)			

BODY
CJ=CJ-5, CJ-6, CJ-7, CJ-8, Scrambler(1981-86)
MJ=Comanche Pickup(1986)

STYLES
SJ=Wagoneer(1981-83), Grand Wagoneer(1984-86), Cherokee(1981-83), J-10, J-20(1981-86)
XJ=Wagoneer(1984-86), Cherokee(1984-86)

AR = Use as Required - = Non Illustrated Part P.A.R. = Paint as Required

81J 048 900

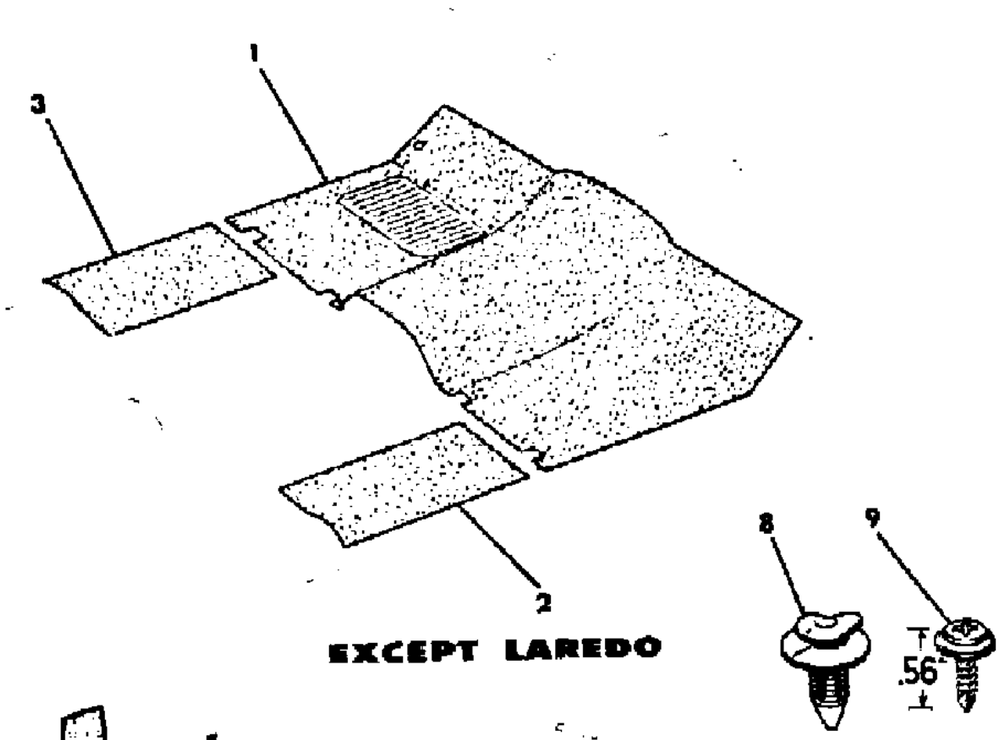

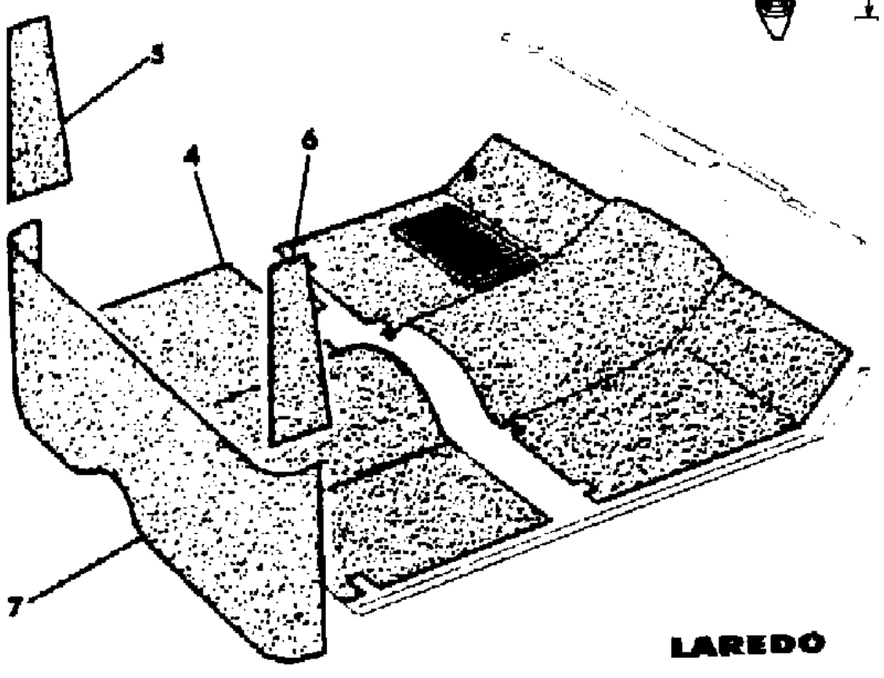

ITEM	PART NUMBER	QTY	BODY	MODEL	DESCRIPTION
8	J400 6176	12			FASTENER
9	J400 1776	11			SCREW

MODEL CODES

16=Cherokee 2 Dr.(1981-83)	78=Cherokee 4WD-4 Dr.(1984-86)	64=Comanche 2WD-6 Ft. Box(1986)	25=J-10 Truck 7 Ft. Box(1981-84)
17=Cherokee 2 Dr.(1981-83)	85=CJ-5 (1981-83)	66=Comanche 2WD-7 Ft. Box(1986)	26=J10 Truck 8 Ft. Box(1981-86)
73=Cherokee 2WD-2 Dr.(1984-86)	86=CJ-6(1981)	63=Comanche 4WD-6 Ft. Box(1986)	27=J-20 Truck 8 Ft. Box(1981-86)
74=Cherokee 2WD-4 Dr.(1984-86)	87=CJ-7(1981-86)	65=Comanche 4WD-7 Ft. Box(1986)	15=Wagoneer 4 Dr.(1981-83)
18=Cherokee 4 Dr.(1981-83)	88=CJ-8, Scrambler(1981-86)	15=Grand Wagoneer 4 Dr.(1984-86)	75=Wagoneer 4WD-4 Dr.(1984-86)
77=Cherokee 4WD-2 Dr.(1984-86)			

BODY
CJ=CJ-5, CJ-6, CJ-7, CJ-8, Scrambler(1981-86)
MJ=Comanche Pickup(1986)

STYLES
SJ=Wagoneer(1981-83), Grand Wagoneer(1984-86), Cherokee(1981-83), J-10, J-20(1981-86)
XJ=Wagoneer(1984-86), Cherokee(1984-86)

AR = Use as Required - = Non Illustrated Part P.A.R. = Paint as Required

PANELS, DOOR TRIM 2 DOOR SJ CHEROKEE
Figure 48-1000

81J 048 1000

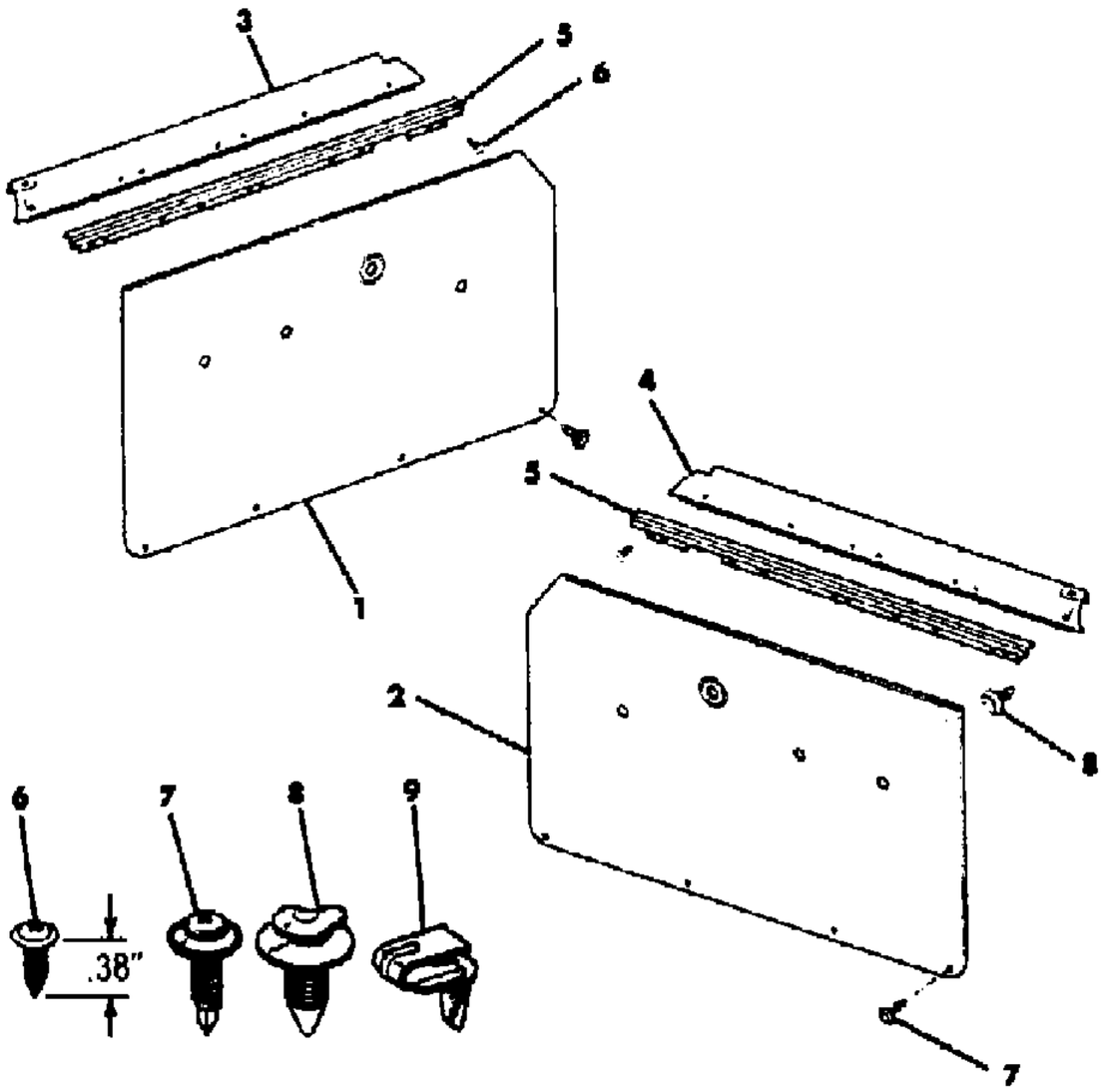

ITEM	PART NUMBER	QTY	BODY	MODEL	DESCRIPTION
1					PANEL, Door Trim
	J575 3853	1			Coded "1CD"or"1DD"
	J575 7521	1			Coded "1DE"or"1DG"
	J575 7541	1			Coded "1DJ"or"1DK"
	J575 3855	1			Coded "3CD"or"3DD", 1981
	J576 0149	1			Coded "3CD"or"3DD", 1982-83
	J575 7523	1			Coded "3DE"or"3DG", 1981
	J576 0151	1			Coded "3DE"or"3DG", 1982
	J576 0147	1			Coded "3DE", 1983
	J575 7525	1			Coded "5DE"or"5DG"
	J575 7543	1			Coded "5DJ"or"5DK"
	J575 7501	1			Coded "6CD"or"6DD"
	J575 7527	1			Coded "6DE"or"6DG"
2					PANEL, Door Trim
	J575 3854	1			Coded "1CD"or"1DD"
	J575 7520	1			Coded "1DE"or"1DG"
	J575 7540	1			Coded "1DJ"or"1DK"
	J575 3856	1			Coded "3CD"or"3DD", 1981
	J576 0148	1			Coded "3CD"or"3DD", 1982-83
	J575 7522	1			Coded "3DE"or"3DG", 1981
	J576 0150	1			Coded "3DE"or"3DG", 1982
	J576 0146	1			Coded "3DE", 1983
3					MOULDING, Trim Panel
	J575 0833	1			Black
	J575 7551	1			Nutmeg
4					MOULDING, Trim Panel
	J575 0832	1			Black
	J575 7550	1			Nutmeg
5	J098 1842	2			RETAINER, Trim Panel
6	J400 4812	10			SCREW
7					SCREW
	J400 1776	14			.56"
	J400 3095	14			.75"
8	J400 6176	14			FASTENER
9	J098 1372	14			FASTENER

MODEL CODES

16=Cherokee 2 Dr.(1981-83)	78=Cherokee 4WD-4 Dr.(1984-86)	64=Comanche 2WD-6 Ft. Box(1986)	25=J-10 Truck 7 Ft. Box(1981-84)
17=Cherokee 2 Dr.(1981-83)	85=CJ-5 (1981-83)	66=Comanche 2WD-7 Ft. Box(1986)	26=J10 Truck 8 Ft. Box(1981-86)
73=Cherokee 2WD-2 Dr.(1984-86)	86=CJ-6(1981)	63=Comanche 4WD-6 Ft. Box(1986)	27=J-20 Truck 8 Ft. Box(1981-86)
74=Cherokee 2WD-4 Dr.(1984-86)	87=CJ-7(1981-86)	65=Comanche 4WD-7 Ft. Box(1986)	15=Wagoneer 4 Dr.(1981-83)
18=Cherokee 4 Dr.(1981-83)	88=CJ-8, Scrambler(1981-86)	15=Grand Wagoneer 4 Dr.(1984-86)	75=Wagoneer 4WD-4 Dr.(1984-86)
77=Cherokee 4WD-2 Dr.(1984-86)			

BODY
CJ=CJ-5, CJ-6, CJ-7, CJ-8, Scrambler(1981-86)
MJ=Comanche Pickup(1986)

STYLES
SJ=Wagoneer(1981-83), Grand Wagoneer(1984-86), Cherokee(1981-83), J-10, J-20(1981-86)
XJ=Wagoneer(1984-86), Cherokee(1984-86)

AR = Use as Required - = Non Illustrated Part P.A.R. = Paint as Required

« RETURN TO GROUP INDEX

PANELS, DOOR TRIM 4 DOOR WAGON SJ CHEROKEE
Figure 48-1100

81J 048 1100

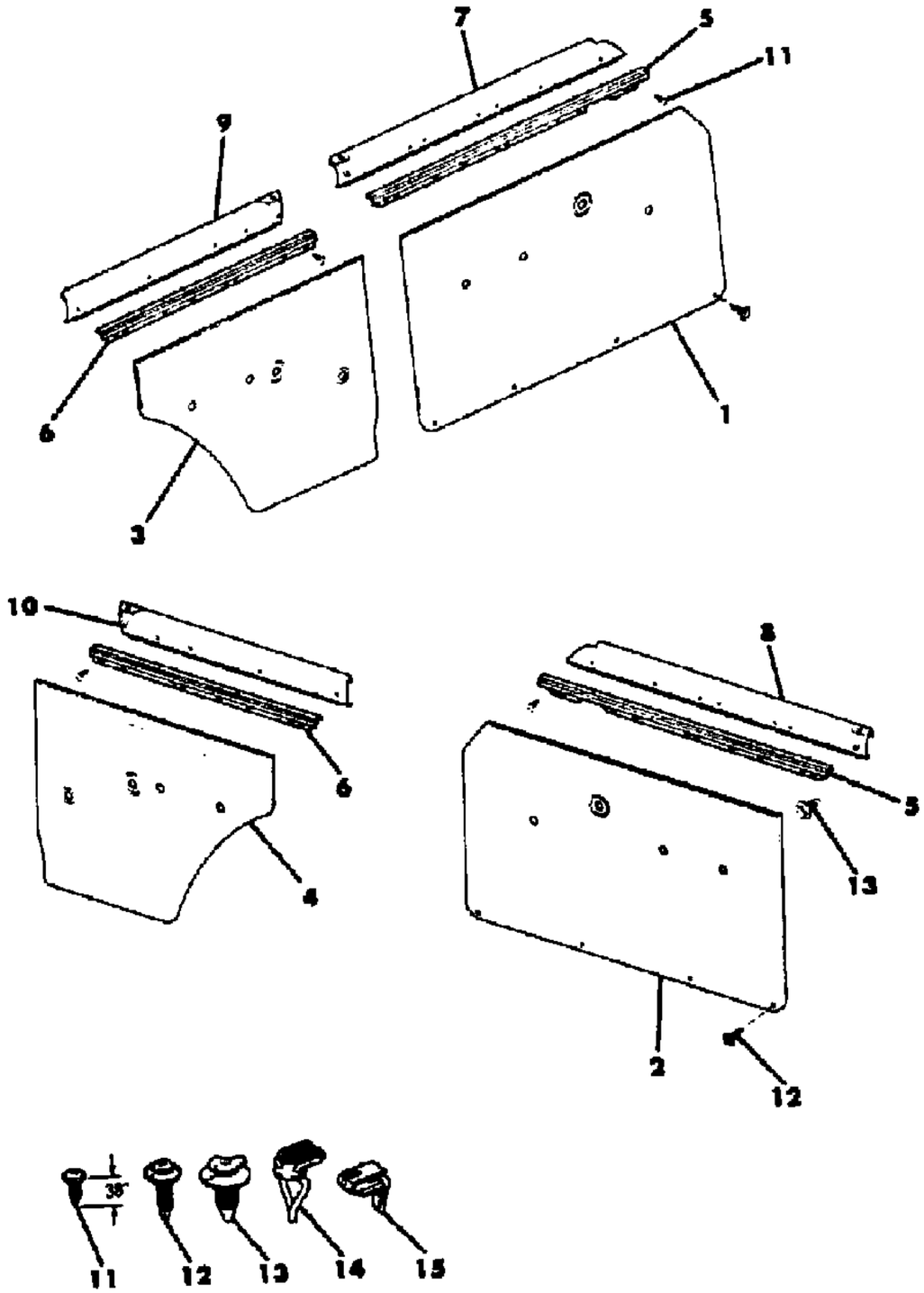

ITEM	PART NUMBER	QTY	BODY	MODEL	DESCRIPTION
1					PANEL, Door Trim
	J575 3853	1			Coded "1AD"or"1CD"or"1DD"
	J575 7505	1			Coded "1AF"or"1BF"
	J575 7521	1			Coded "1BE"or"1BG"
	J575 7541	1			Coded "1BK"or"1DJ"or"1DK"
	J575 3855	1			Coded "3AD"or"3CD"or"3DD", 1981
	J576 0149	1			Coded "3AD"or"3CD", 1982-83
	J575 7507	1			Coded "3AF"or"3BF", 1981
	J576 0153	1			Coded "3AF"or"3BF", 1982
	J575 7523	1			Coded "3BE"or"3BG", 1981
	J576 0151	1			Coded "3BE"or"3BG", 1982-83
	J575 7509	1			Coded "5AF"or"5BF"
	J575 7525	1			Coded "5BE"or"5BG"
	J575 7543	1			Coded "5BK"or"5DJ"or"5DK"
	J575 7501	1			Coded "6AD"or"6CD"or"6DD"
	J575 7511	1			Coded "6AF"or"6BF"
	J575 7527	1			Coded "6BE"or"6BG"
2					PANEL, Door Trim
	J575 3854	1			Coded "1AD"or"1CD"or"1DD"
	J575 7504	1			Coded "1AF"or"1BF"
	J575 7520	1			Coded "1BE"or"1BG"
	J575 7540	1			Coded "1BK"or"1DJ"or"1DK"
	J575 3856	1			Coded "3AD"or"3CD"or"3DD", 1981
	J576 0148	1			Coded "3AD"or"3CD", 1982-83
	J575 7506	1			Coded "3AF"or"3BF", 1981
	J576 0152	1			Coded "3AF"or"3BF", 1981
	J575 7522	1			Coded "3BE"or"3BG", 1981
	J576 0150	1			Coded "3BE"or"3BG", 1982-83
	J575 7508	1			Coded "5AF"or"5BF"
	J575 7524	1			Coded "5BE"or"5BG"
	J575 5542	1			Coded "5BK"or"5DJ"or"5DK"
	J575 7500	1			Coded "6AD"or"6CD"or"6DD"
	J575 7510	1			Coded "6AF"or"6BF"
	J575 7526	1			Coded "6BE"or"6BG"
3					PANEL, Door
	J575 3891	1			Coded "1AD"or"1CD"or"1DD"
	J575 7563	1			Coded "1AF"or"1BF"
	J575 7555	1			Coded "1BE"or"1BG"
	J575 3905	1			Coded "1BK"or"1DJ"or"1DK"

MODEL CODES

16=Cherokee 2 Dr.(1981-83)	78=Cherokee 4WD-4 Dr.(1984-86)	64=Comanche 2WD-6 Ft. Box(1986)	25=J-10 Truck 7 Ft. Box(1981-84)
17=Cherokee 2 Dr.(1981-83)	85=CJ-5 (1981-83)	66=Comanche 2WD-7 Ft. Box(1986)	26=J10 Truck 8 Ft. Box(1981-86)
73=Cherokee 2WD-2 Dr.(1984-86)	86=CJ-6(1981)	63=Comanche 4WD-6 Ft. Box(1986)	27=J-20 Truck 8 Ft. Box(1981-86)
74=Cherokee 2WD-4 Dr.(1984-86)	87=CJ-7(1981-86)	65=Comanche 4WD-7 Ft. Box(1986)	15=Wagoneer 4 Dr.(1981-83)
18=Cherokee 4 Dr.(1981-83)	88=CJ-8, Scrambler(1981-86)	15=Grand Wagoneer 4 Dr.(1984-86)	75=Wagoneer 4WD-4 Dr.(1984-86)
77=Cherokee 4WD-2 Dr.(1984-86)			

BODY
CJ=CJ-5, CJ-6, CJ-7, CJ-8, Scrambler(1981-86)
MJ=Comanche Pickup(1986)

STYLES
SJ=Wagoneer(1981-83), Grand Wagoneer(1984-86), Cherokee(1981-83), J-10, J-20(1981-86)
XJ=Wagoneer(1984-86), Cherokee(1984-86)

AR = Use as Required - = Non Illustrated Part P.A.R. = Paint as Required

« RETURN TO GROUP INDEX »

PANELS, DOOR TRIM 4 DOOR WAGON SJ CHEROKEE
Figure 48-1100

81J 048 1100

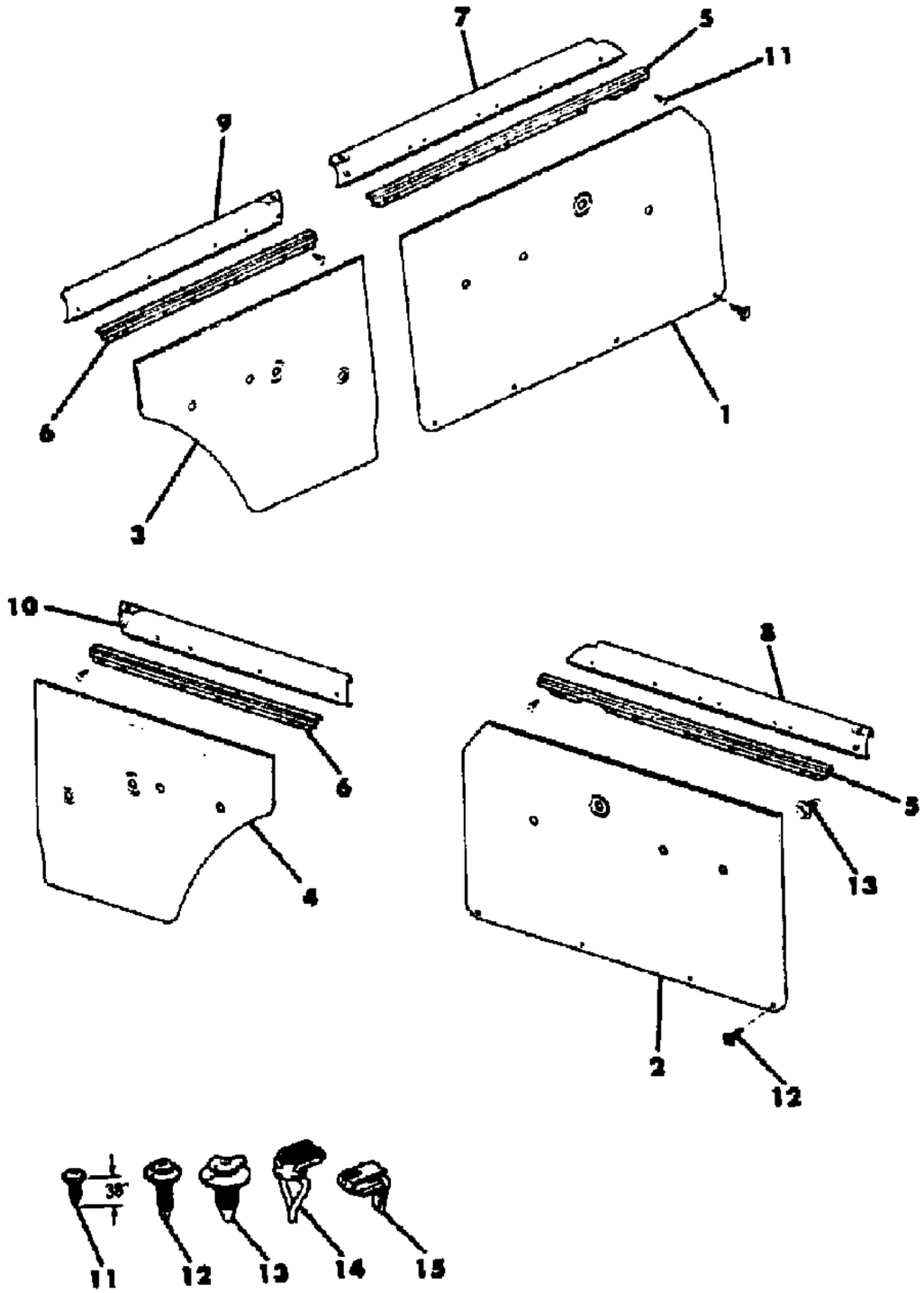

ITEM	PART NUMBER	QTY	BODY	MODEL	DESCRIPTION
	J575 3893	1			Coded "3AD"or"3CD"or"3DD", 1981
	J576 1841	1			Coded "3AD"or"3CD", 1981
	J575 7565	1			Coded "3AF"or"3BF", 1981
	J576 0157	1			Coded "3AF"or"3BF", 1982
	J575 7557	1			Coded "3BE"or"3BG", 1981
	J576 0165	1			Coded "3BE"or"3BG", 1982
	J575 7567	1			Coded "5AF"or"5BF"
	J575 7559	1			Coded "5BE"or"5BG"
	J575 7981	1			Coded "5BK"or"5DJ"or"5DK"
	J575 7553	1			Coded "6AD"or"6CD"or"6DD"
	J575 7569	1			Coded "6AF"or"6BF"
	J575 7561	1			Coded "6BE"or"6BG"
4					PANEL, Door
	J575 3892	1			Coded "1AD"or"1CD"or"1DD"
	J575 7562	1			Coded "1AF"or"1BF"
	J575 7554	1			Coded "1BE"or"1BG"
	J575 3906	1			Coded "1BK"or"1DJ"or"1DK"
	J575 3894	1			Coded "3AD"or"3CD"or"3DD", 1981
	J576 1840	1			Coded "3AD"or"3CD", 1982
	J575 7564	1			Coded "3AF"or"3BF", 1981
	J576 0156	1			Coded "3AF"or"3BF", 1982
	J575 7556	1			Coded "3BE"or"3BG", 1981
	J576 0164	1			Coded "3BE"or"3BG", 1982
	J575 7566	1			Coded "5AF"or"5BF"
	J575 7558	1			Coded "5BE"or"5BG"
	J575 7980	1			Coded "5BK"or"5DJ"or"5DK"
	J575 7552	1			Coded "6AD"or"6CD"or"6DD"
	J575 7568	1			Coded "6AF"or"6BF"
	J575 7560	1			Coded "6BE"or"6BG"
5	J098 1842	2			RETAINER, Trim Panel
6	J098 1843	2			RETAINER, Trim Panel
7					MOULDING, Trim Panel
	J575 0833	1			Black
	J575 7551	1			Nutmeg
8					MOULDING, Trim Panel
	J575 0832	1			Black
	J575 7550	1			Nutmeg
9					MOULDING, Trim Panel
	J575 7971	1			Black

MODEL CODES

16=Cherokee 2 Dr.(1981-83)	78=Cherokee 4WD-4 Dr.(1984-86)	64=Comanche 2WD-6 Ft. Box(1986)	25=J-10 Truck 7 Ft. Box(1981-84)
17=Cherokee 2 Dr.(1981-83)	85=CJ-5 (1981-83)	66=Comanche 2WD-7 Ft. Box(1986)	26=J10 Truck 8 Ft. Box(1981-86)
73=Cherokee 2WD-2 Dr.(1984-86)	86=CJ-6(1981)	63=Comanche 4WD-6 Ft. Box(1986)	27=J-20 Truck 8 Ft. Box(1981-86)
74=Cherokee 2WD-4 Dr.(1984-86)	87=CJ-7(1981-86)	65=Comanche 4WD-7 Ft. Box(1986)	15=Wagoneer 4 Dr.(1981-83)
18=Cherokee 4 Dr.(1981-83)	88=CJ-8, Scrambler(1981-86)	15=Grand Wagoneer 4 Dr.(1984-86)	75=Wagoneer 4WD-4 Dr.(1984-86)
77=Cherokee 4WD-2 Dr.(1984-86)			

BODY
CJ=CJ-5, CJ-6, CJ-7, CJ-8, Scrambler(1981-86)
MJ=Comanche Pickup(1986)

STYLES
SJ=Wagoneer(1981-83), Grand Wagoneer(1984-86), Cherokee(1981-83), J-10, J-20(1981-86)
XJ=Wagoneer(1984-86), Cherokee(1984-86)

AR = Use as Required - = Non Illustrated Part P.A.R. = Paint as Required

PANELS, DOOR TRIM 4 DOOR WAGON SJ CHEROKEE
Figure 48-1100

81J 048 1100

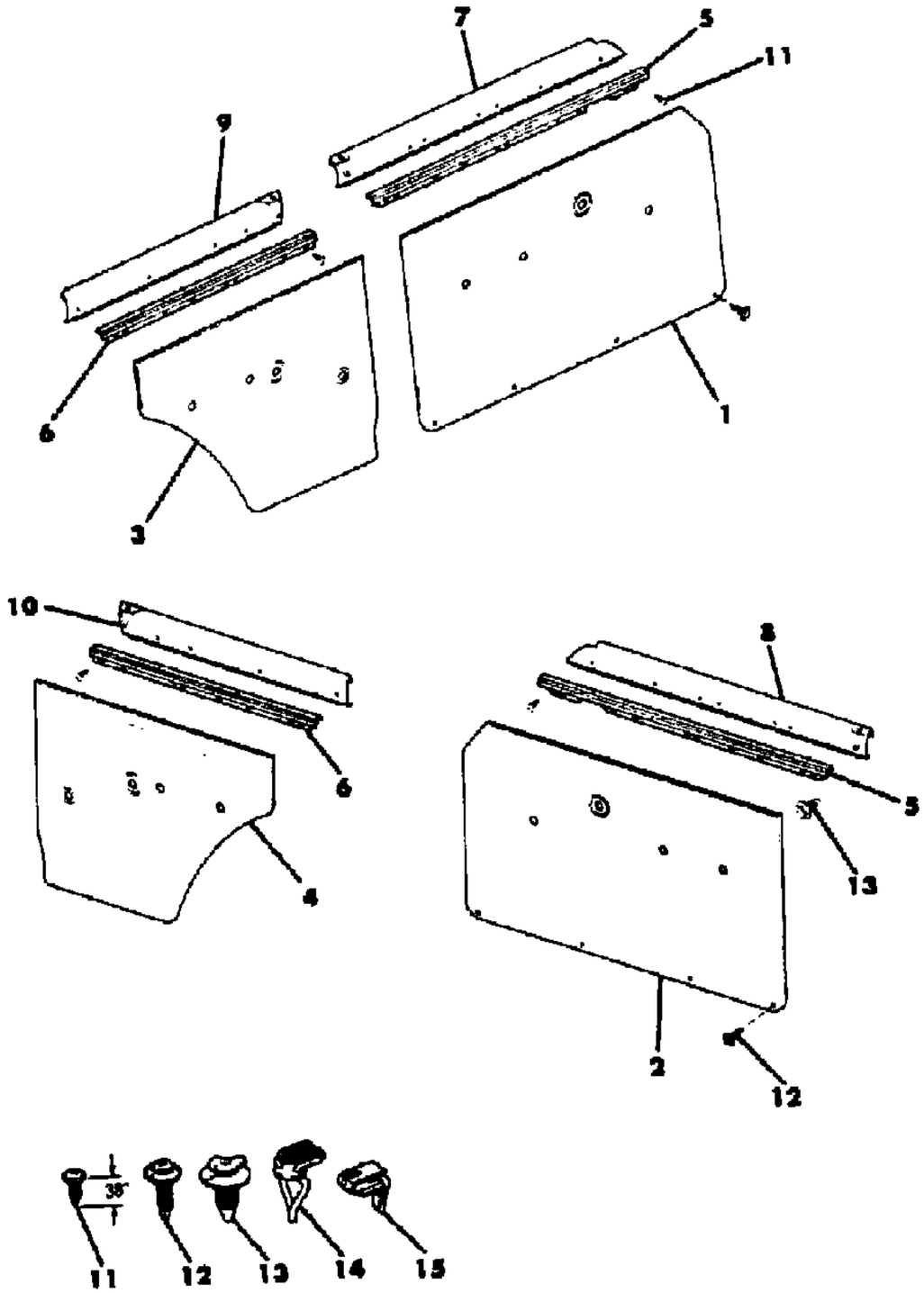

ITEM	PART NUMBER	QTY	BODY	MODEL	DESCRIPTION
	J575 7973	1			Nutmeg
10					MOULDING, Trim Panel
	J575 7970	1			Black
	J575 7972	1			Nutmeg
11	J400 4812	16			SCREW
12					SCREW
	J400 1776	14			.56"
	J400 3095	14			.75"
13	J400 6176	28			FASTENER
14	J400 6179	28			FASTENER
15	J098 1372	14			FASTENER

MODEL CODES

16=Cherokee 2 Dr.(1981-83)	78=Cherokee 4WD-4 Dr.(1984-86)	64=Comanche 2WD-6 Ft. Box(1986)	25=J-10 Truck 7 Ft. Box(1981-84)
17=Cherokee 2 Dr.(1981-83)	85=CJ-5 (1981-83)	66=Comanche 2WD-7 Ft. Box(1986)	26=J10 Truck 8 Ft. Box(1981-86)
73=Cherokee 2WD-2 Dr.(1984-86)	86=CJ-6(1981)	63=Comanche 4WD-6 Ft. Box(1986)	27=J-20 Truck 8 Ft. Box(1981-86)
74=Cherokee 2WD-4 Dr.(1984-86)	87=CJ-7(1981-86)	65=Comanche 4WD-7 Ft. Box(1986)	15=Wagoneer 4 Dr.(1981-83)
18=Cherokee 4 Dr.(1981-83)	88=CJ-8, Scrambler(1981-86)	15=Grand Wagoneer 4 Dr.(1984-86)	75=Wagoneer 4WD-4 Dr.(1984-86)
77=Cherokee 4WD-2 Dr.(1984-86)			

BODY
CJ=CJ-5, CJ-6, CJ-7, CJ-8, Scrambler(1981-86)
MJ=Comanche Pickup(1986)

STYLES
SJ=Wagoneer(1981-83), Grand Wagoneer(1984-86), Cherokee(1981-83), J-10, J-20(1981-86)
XJ=Wagoneer(1984-86), Cherokee(1984-86)

AR = Use as Required - = Non Illustrated Part P.A.R. = Paint as Required

« RETURN TO GROUP INDEX

PANELS, DOOR TRIM 4 DOOR WAGON SJ WAGONEER
Figure 48-1200

81J 048 1200

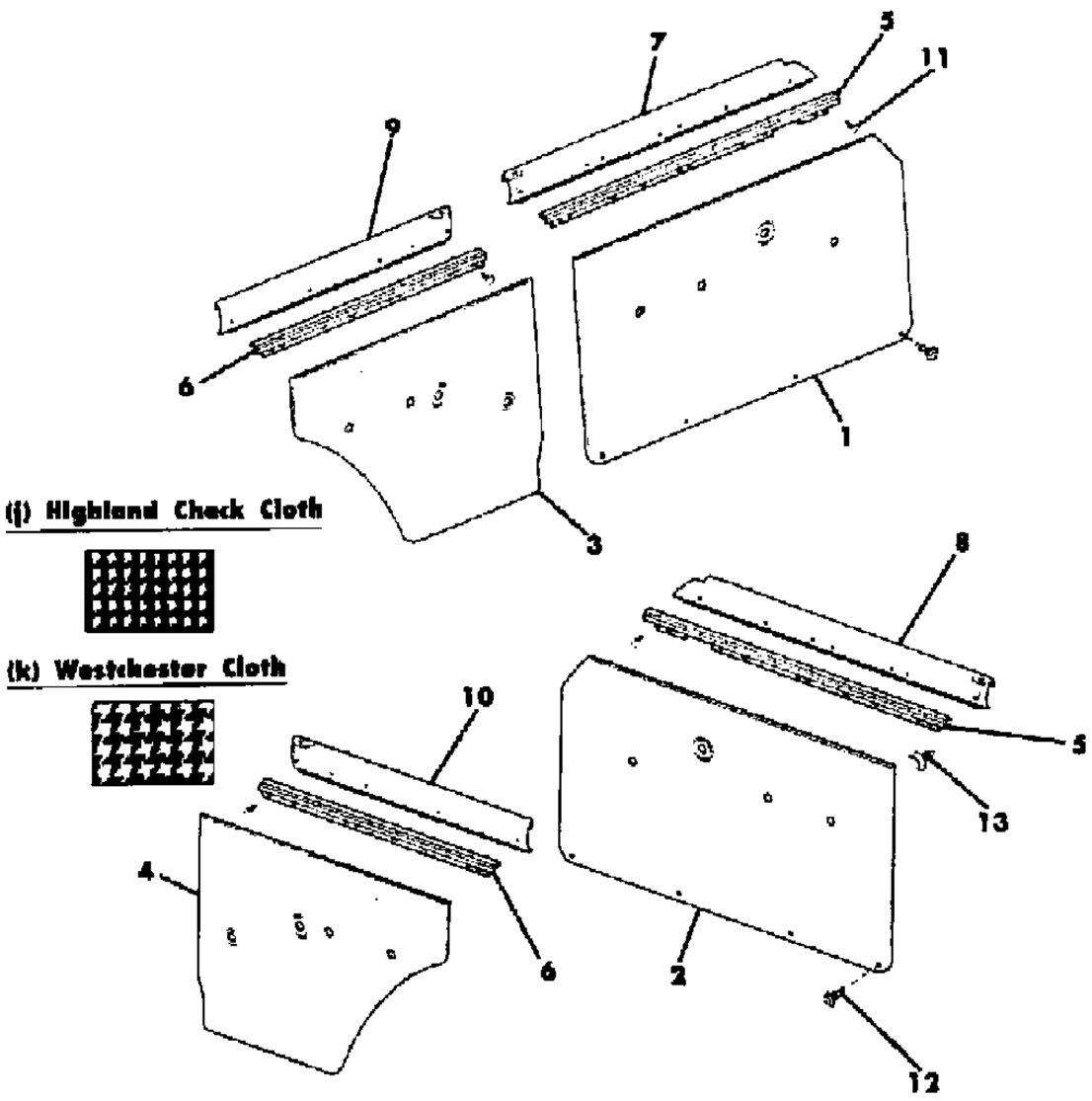

ITEM	PART NUMBER	QTY	BODY	MODEL	DESCRIPTION
1					PANEL, Door Trim
	J575 7505	1			Coded "1AF"or"1AH"
	J575 7933	1			Coded "1AM"
	J575 7505	1			Coded "1BF"or"1BH"
	J575 7507	1			Coded "3AF"or"3AH", 1981
	J576 0153	1			Coded "3AF"or"3AH", 1982
	J575 7935	1			Coded "3AM", 1981
	J576 0161	1			Coded "3AM", 1982
	J575 7507	1			Coded "3BF"or"3BH", 1981
	J576 0153	1			Coded "3BF"or"3BH", 1982
	J576 6137	1			Coded "4BL", 1985
	5501 0355	1			Coded "4BL", 1986
	J575 7509	1			Coded "5AF",or"5AH"
	J576 4919	1			Coded "5AN"or"5BN"
	J575 7509	1			Coded "5BF"or"5BH"
	J575 7531	1			Coded "5BL", with Manual Side View Mirrors, 1981
	J576 0321	1			Coded "5BL", with Electric Side View Mirrors, 1981
	J576 0321	1			Coded "5BL", Trim Welt Has .218" Diameter, 1982-83
	J576 3343	1			Coded "5BL", Trim Welt Has .125" Diameter, 1982-83
	J576 4979	1			Coded "5BL", 1984-85
	J575 7511	1			Coded "6AF"or"6AH"
	J575 7937	1			Coded "6AM"
	J576 4917	1			Coded "6AN"or"6BN"
	J575 7511	1			Coded "6BF"or"6BH"
	J575 7529	1			Coded "6BL", with Manual Side View Mirrors, 1981
	J576 0323	1			Coded "6BL", with Electric Side View Mirrors, 1981
	J576 0323	1			Coded "6BL", Trim Welt Has .218" Diameter, 1982-83
	J576 3345	1			Coded "6BL", Trim Welt Has .125" Diameter, 1982-83
	J576 4927	1			Coded "6BL", 1984
	J576 4923	1			Coded "6BW", Highland Check Cloth
	5500 8249	1			Coded "6BW", Westchester Cloth
	J576 6129	1			Coded "9AN"or"9BN"
	J576 6139	1			Coded "9BL", 1985
	5501 0357	1			Coded "9BL", 1986
	J576 6133	1			Coded "9BW"
2					PANEL, Door Trim
	J575 7504	1			Coded "1AF"or"1AH"
	J575 7932	1			Coded "1AM"
	J575 7504	1			Coded "1BF"or"1BH"

MODEL CODES

16=Cherokee 2 Dr.(1981-83)	78=Cherokee 4WD-4 Dr.(1984-86)	64=Comanche 2WD-6 Ft. Box(1986)	25=J-10 Truck 7 Ft. Box(1981-84)
17=Cherokee 2 Dr.(1981-83)	85=CJ-5 (1981-83)	66=Comanche 2WD-7 Ft. Box(1986)	26=J10 Truck 8 Ft. Box(1981-86)
73=Cherokee 2WD-2 Dr.(1984-86)	86=CJ-6(1981)	63=Comanche 4WD-6 Ft. Box(1986)	27=J-20 Truck 8 Ft. Box(1981-86)
74=Cherokee 2WD-4 Dr.(1984-86)	87=CJ-7(1981-86)	65=Comanche 4WD-7 Ft. Box(1986)	15=Wagoneer 4 Dr.(1981-83)
18=Cherokee 4 Dr.(1981-83)	88=CJ-8, Scrambler(1981-86)	15=Grand Wagoneer 4 Dr.(1984-86)	75=Wagoneer 4WD-4 Dr.(1984-86)
77=Cherokee 4WD-2 Dr.(1984-86)			

BODY
CJ=CJ-5, CJ-6, CJ-7, CJ-8, Scrambler(1981-86)
MJ=Comanche Pickup(1986)

STYLES
SJ=Wagoneer(1981-83), Grand Wagoneer(1984-86), Cherokee(1981-83), J-10, J-20(1981-86)
XJ=Wagoneer(1984-86), Cherokee(1984-86)

AR = Use as Required - = Non Illustrated Part P.A.R. = Paint as Required

« RETURN TO GROUP INDEX »

PANELS, DOOR TRIM 4 DOOR WAGON SJ WAGONEER
Figure 48-1200

81J 048 1200

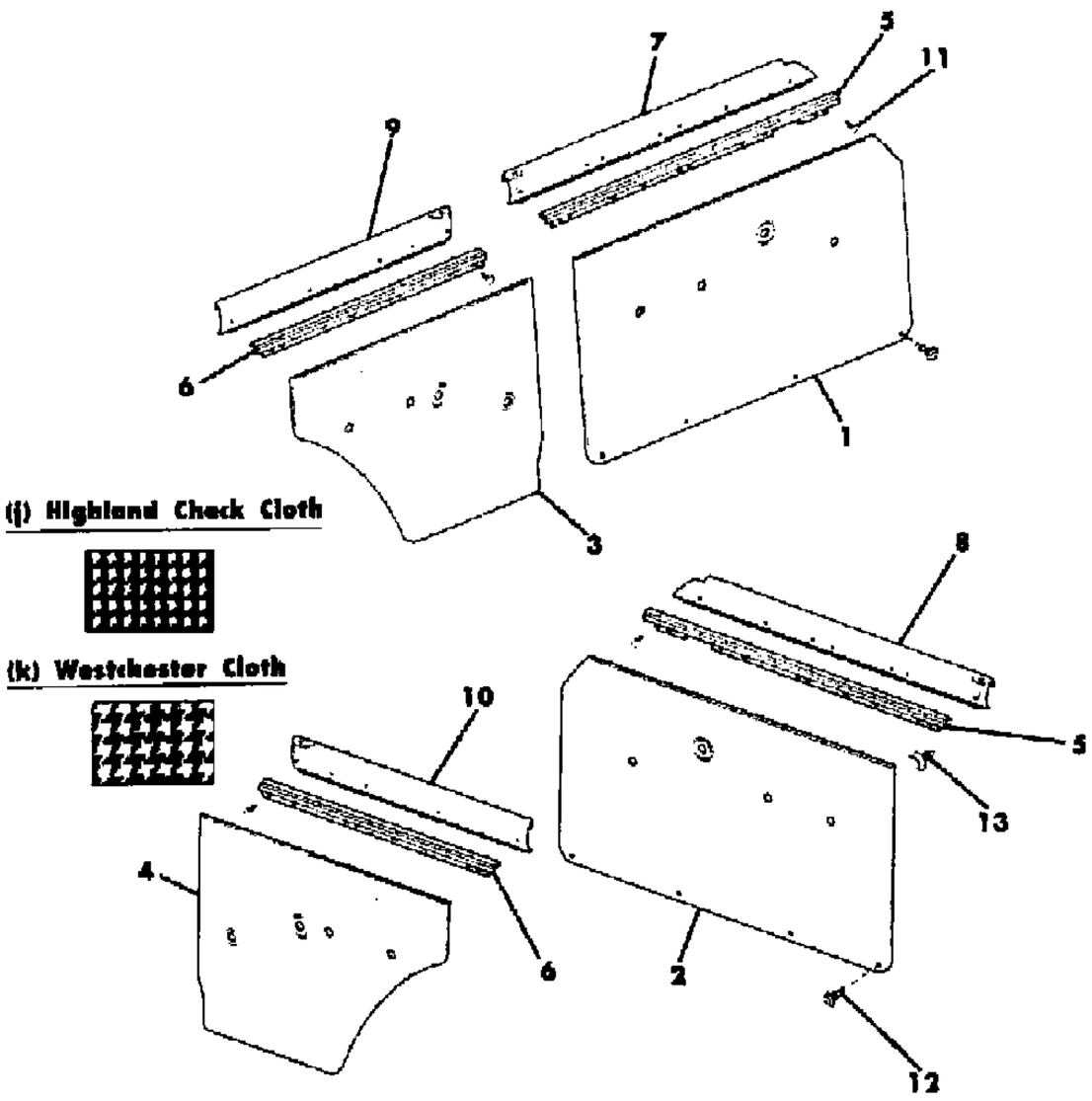

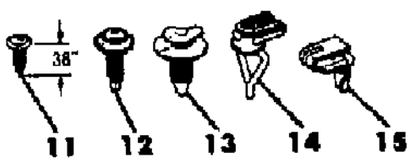

ITEM	PART NUMBER	QTY	BODY	MODEL	DESCRIPTION
	J575 7506	1			Coded "3AF"or"3AH", 1981
	J576 0152	1			Coded "3AF"or"3AH", 1982
	J575 7934	1			Coded "3AM", 1981
	J576 0160	1			Coded "3AM", 1982
	J575 7506	1			Coded "3BF"or"3BH", 1981
	J576 0152	1			Coded "3BF"or"3BH", 1982
	J576 6136	1			Coded "4BL", 1985
	5501 0354	1			Coded "4BL", 1986
	J575 7508	1			Coded "5AF"or"5AH"
	J576 4918	1			Coded "5AN"or"5BN"
	J575 7508	1			Coded "5BF"or"5BH"
	J575 7530	1			Coded "5BL", with Manual Side View Mirrors, 1981
	J576 0320	1			Coded "5BL", with Electric Side View Mirrors, 1981
	J576 0320	1			Coded "5BL", Trim Welt Has .218" Diameter, 1982-83
	J576 3342	1			Coded "5BL", Trim Welt Has .125" Diameter, 1982-83
	J576 4978	1			Coded "5BL", 1984-85
	J575 7510	1			Coded "6AF"or"6AH"
	J575 7936	1			Coded "1AM"
	J576 4916	1			Coded "6AN"or"6BN"
	J575 7510	1			Coded "6BF"or"6BH"
	J575 7528	1			Coded "6BL", with Manual Side View Mirrors, 1981
	J576 0322	1			Coded "6BL", with Electric Side View Mirrors, 1981
	J576 0322	1			Coded "6BL", Trim Welt Has .218" Diameter, 1982-83
	J576 3344	1			Coded "6BL", Trim Welt Has .125" Diameter, 1982-83
	J576 4926	1			Coded "6BL", 1984
	J576 4922	1			Coded "6BW", Highland Check Cloth
	5500 8248	1			Coded "6BW", Westchester Cloth
	J576 6128	1			Coded "9AN"or"BN"
	J576 6138	1			Coded "9BL", 1985
	5501 0356	1			Coded "9BL", 1986
	J576 6132	1			Coded "9BW"
3					PANEL, Door Trim
	J575 7563	1			Coded "1AF"or"1AH"
	J575 3905	1			Coded "1AM"
	J575 7563	1			Coded "1BF"or"1BH"
	J575 7565	1			Coded "3AF"or"3AH", 1981
	J576 0157	1			Coded "3AF"or"3AH", 1982
	J575 3907	1			Coded "3AM", 1981
	J576 0163	1			Coded "3AM", 1982

MODEL CODES

16=Cherokee 2 Dr.(1981-83)	78=Cherokee 4WD-4 Dr.(1984-86)	64=Comanche 2WD-6 Ft. Box(1986)	25=J-10 Truck 7 Ft. Box(1981-84)
17=Cherokee 2 Dr.(1981-83)	85=CJ-5 (1981-83)	66=Comanche 2WD-7 Ft. Box(1986)	26=J10 Truck 8 Ft. Box(1981-86)
73=Cherokee 2WD-2 Dr.(1984-86)	86=CJ-6(1981)	63=Comanche 4WD-6 Ft. Box(1986)	27=J-20 Truck 8 Ft. Box(1981-86)
74=Cherokee 2WD-4 Dr.(1984-86)	87=CJ-7(1981-86)	65=Comanche 4WD-7 Ft. Box(1986)	15=Wagoneer 4 Dr.(1981-83)
18=Cherokee 4 Dr.(1981-83)	88=CJ-8, Scrambler(1981-86)	15=Grand Wagoneer 4 Dr.(1984-86)	75=Wagoneer 4WD-4 Dr.(1984-86)
77=Cherokee 4WD-2 Dr.(1984-86)			

BODY
CJ=CJ-5, CJ-6, CJ-7, CJ-8, Scrambler(1981-86)
MJ=Comanche Pickup(1986)

STYLES
SJ=Wagoneer(1981-83), Grand Wagoneer(1984-86), Cherokee(1981-83), J-10, J-20(1981-86)
XJ=Wagoneer(1984-86), Cherokee(1984-86)

AR = Use as Required - = Non Illustrated Part P.A.R. = Paint as Required

PANELS, DOOR TRIM 4 DOOR WAGON SJ WAGONEER
Figure 48-1200

81J 048 1200

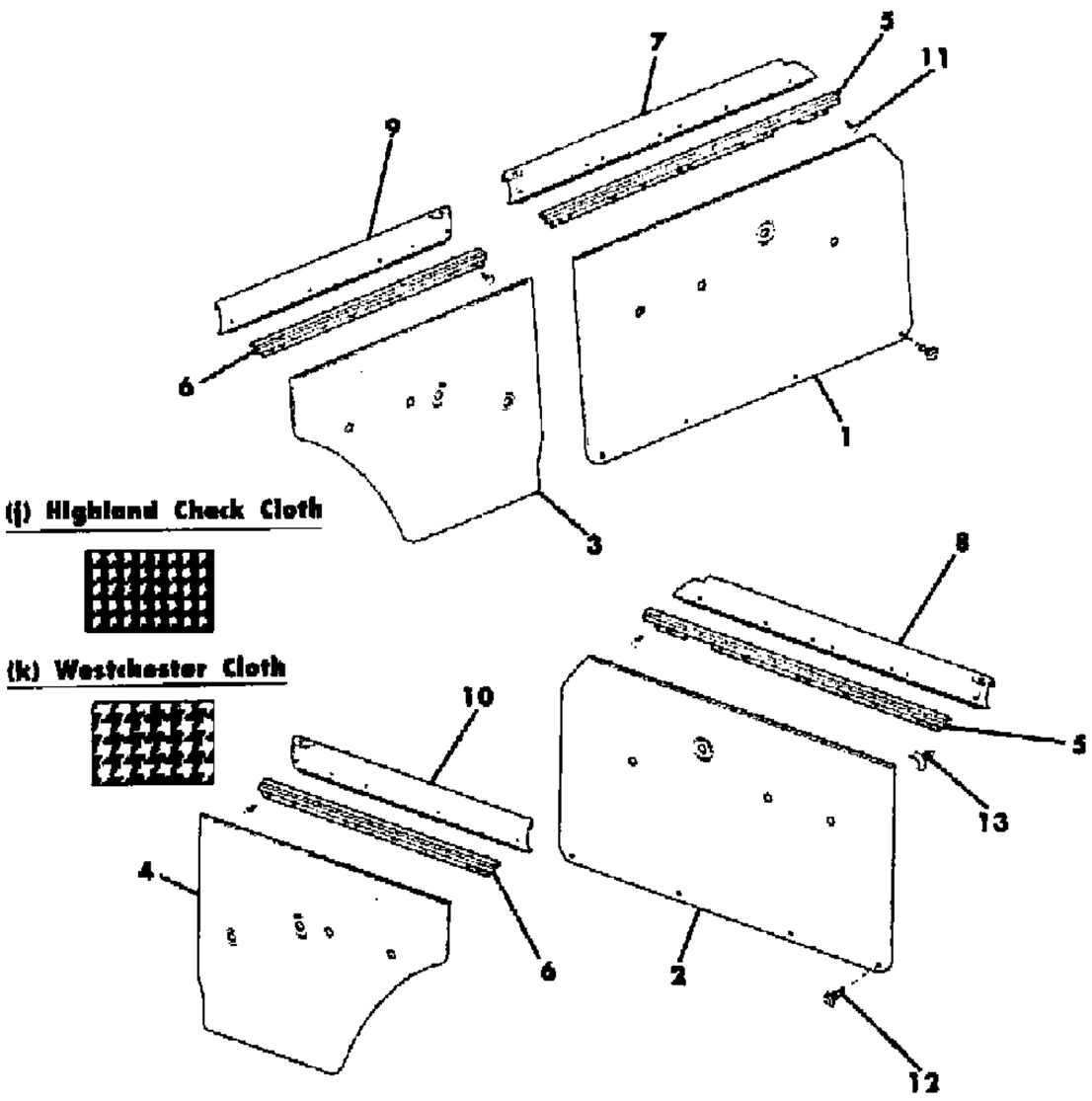

ITEM	PART NUMBER	QTY	BODY	MODEL	DESCRIPTION
	J575 7565	1			Coded "3BF"or"3BH", 1981
	J576 0157	1			Coded "3BF"or"3BH", 1982
	J576 6145	1			Coded "4BL", 1985
	5501 1335	1			Coded "4BL", 1986
	J575 7567	1			Coded "5AF"or"5AH"
	J576 4941	1			Coded "5AN"or"5BN"
	J575 7567	1			Coded "5BF"or"5BH"
	J575 7573	1			Coded "5BL", Trim Welt Has .218" Diameter, 1981-82
	J576 3353	1			Coded "5BL", Trim Welt Has .125" Diameter, 1983
	J576 4981	1			Coded "5BL", 1984-85
	J575 7569	1			Coded "6AF"or"6AH"
	J575 7983	1			Coded "6AM"
	J576 4939	1			Coded "6AN"or"6BN"
	J575 7569	1			Coded "6BF"or"6BH"
	J575 7571	1			Coded "6BL", Trim Welt Has .218" Diameter, 1981-82
	J576 3355	1			Coded "6BL", Trim Welt Has .125" Diameter, 1983
	J576 4945	1			Coded "6BL", 1984
	J576 4943	1			Coded "6BW"
	J576 6131	1			Coded "9AN"or"9BN"
	J576 6147	1			Coded "9BL", 1985
	5501 1337	1			Coded "9BL", 1986
	J576 6135	1			Coded "9BW"
4					PANEL, Door Trim
	J575 7562	1			Coded "1AF"or"1AH"
	J575 3906	1			Coded "1AM"
	J575 7562	1			Coded "1BF"or"1BH"
	J575 7564	1			Coded "3AF"or"3AH", 1981
	J576 0156	1			Coded "3AF"or"3AH", 1982
	J575 3908	1			Coded "3AM", 1981
	J576 0162	1			Coded "3AM", 1982
	J575 7564	1			Coded "3BF"or"3BH", 1981
	J576 0156	1			Coded "3BF"or"3BH", 1982
	J576 6144	1			Coded "4BL", 1985
	5501 1334	1			Coded "4BL", 1986
	J575 7566	1			Coded "5AF"or"5AH"
	J576 4940	1			Coded "5AN"or"5BN"
	J575 7566	1			Coded "5BF"or"5BH"
	J575 7572	1			Coded "5BL", Trim Welt Has .218" Diameter, 1981-82
	J576 3352	1			Coded "5BL", Trim Welt Has .125" Diameter, 1983

MODEL CODES

16=Cherokee 2 Dr.(1981-83)	78=Cherokee 4WD-4 Dr.(1984-86)	64=Comanche 2WD-6 Ft. Box(1986)	25=J-10 Truck 7 Ft. Box(1981-84)
17=Cherokee 2 Dr.(1981-83)	85=CJ-5 (1981-83)	66=Comanche 2WD-7 Ft. Box(1986)	26=J10 Truck 8 Ft. Box(1981-86)
73=Cherokee 2WD-2 Dr.(1984-86)	86=CJ-6(1981)	63=Comanche 4WD-6 Ft. Box(1986)	27=J-20 Truck 8 Ft. Box(1981-86)
74=Cherokee 2WD-4 Dr.(1984-86)	87=CJ-7(1981-86)	65=Comanche 4WD-7 Ft. Box(1986)	15=Wagoneer 4 Dr.(1981-83)
18=Cherokee 4 Dr.(1981-83)	88=CJ-8, Scrambler(1981-86)	15=Grand Wagoneer 4 Dr.(1984-86)	75=Wagoneer 4WD-4 Dr.(1984-86)
77=Cherokee 4WD-2 Dr.(1984-86)			

BODY
CJ=CJ-5, CJ-6, CJ-7, CJ-8, Scrambler(1981-86)
MJ=Comanche Pickup(1986)

STYLES
SJ=Wagoneer(1981-83), Grand Wagoneer(1984-86), Cherokee(1981-83), J-10, J-20(1981-86)
XJ=Wagoneer(1984-86), Cherokee(1984-86)

AR = Use as Required - = Non Illustrated Part P.A.R. = Paint as Required

PANELS, DOOR TRIM 4 DOOR WAGON SJ WAGONEER
Figure 48-1200

81J 048 1200

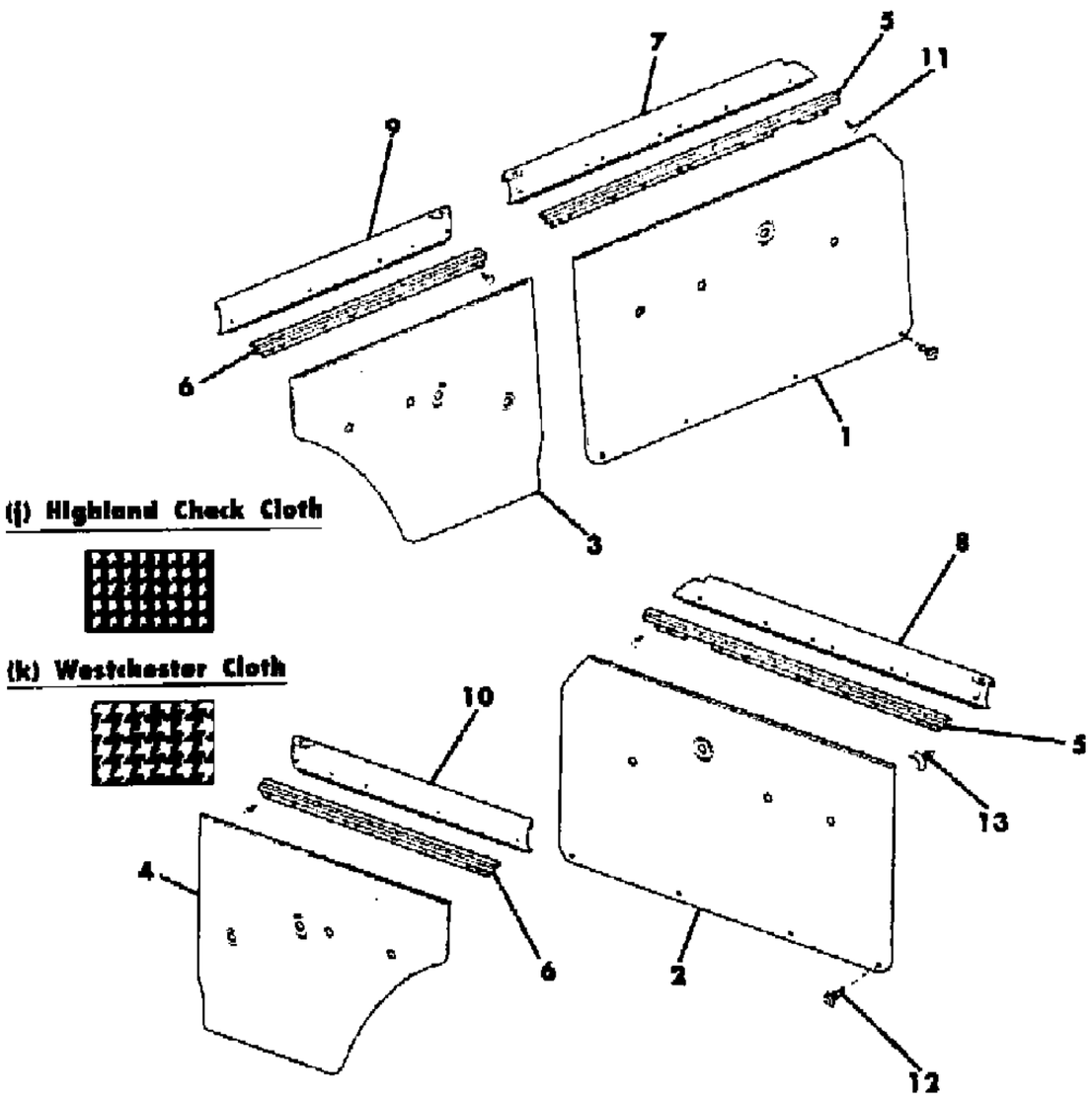

ITEM	PART NUMBER	QTY	BODY	MODEL	DESCRIPTION
	J576 4980	1			Coded "5BL", 1984-85
	J575 7568	1			Coded "6AF"or"6AH"
	J575 7982	1			Coded "6AM"
	J576 4938	1			Coded "6AN"or"6BN"
	J575 7568	1			Coded "6BF"or"6BH"
	J575 7570	1			Coded "6BL", Trim Welt Has .218" Diameter, 1981-82
	J576 3354	1			Coded "6BL", Trim Welt Has .125" Diameter, 1983
	J576 4944	1			Coded "6BL", 1984
	J576 4942	1			Coded "6BW"
	J576 6130	1			Coded "9AN"or"9BN"
	J576 6146	1			Coded "9BL", 1985
	5501 1336	1			Coded "9BL", 1986
	J576 6134	1			Coded "9BW"
5					RETAINER, Trim Panel
	J576 4970	1			Almond
	J575 7574	1			Beige
	J576 6159	1			Garnet
	J576 6158	1			Honey
	J575 7575	1			Nutmeg
	J098 1842	1			Stainless Steel
6					RETAINER, Trim Panel
	J576 4971	1			Almond
	J575 7576	1			Beige
	J576 6161	1			Garnet
	J576 6160	1			Honey
	J575 7577	1			Nutmeg
	J098 1843	1			Stainless Steel
7					MOULDING, Trim Panel
	J575 7547	1			1981-85
	5501 1077	1			1986
	J546 9697	1			1981-86: EXPORT
8					MOULDING, Trim Panel
	J575 7546	1			1981-85
	5501 1076	1			1986
	J546 9698	1			1981-86: EXPORT
9					MOULDING, Trim Panel
	J575 7549	1			1981-85
	5501 1079	1			1986
	J546 9700	1			1981-86: EXPORT

MODEL CODES

16=Cherokee 2 Dr.(1981-83)	78=Cherokee 4WD-4 Dr.(1984-86)	64=Comanche 2WD-6 Ft. Box(1986)	25=J-10 Truck 7 Ft. Box(1981-84)
17=Cherokee 2 Dr.(1981-83)	85=CJ-5 (1981-83)	66=Comanche 2WD-7 Ft. Box(1986)	26=J10 Truck 8 Ft. Box(1981-86)
73=Cherokee 2WD-2 Dr.(1984-86)	86=CJ-6(1981)	63=Comanche 4WD-6 Ft. Box(1986)	27=J-20 Truck 8 Ft. Box(1981-86)
74=Cherokee 2WD-4 Dr.(1984-86)	87=CJ-7(1981-86)	65=Comanche 4WD-7 Ft. Box(1986)	15=Wagoneer 4 Dr.(1981-83)
18=Cherokee 4 Dr.(1981-83)	88=CJ-8, Scrambler(1981-86)	15=Grand Wagoneer 4 Dr.(1984-86)	75=Wagoneer 4WD-4 Dr.(1984-86)
77=Cherokee 4WD-2 Dr.(1984-86)			

BODY
CJ=CJ-5, CJ-6, CJ-7, CJ-8, Scrambler(1981-86)
MJ=Comanche Pickup(1986)

STYLES
SJ=Wagoneer(1981-83), Grand Wagoneer(1984-86), Cherokee(1981-83), J-10, J-20(1981-86)
XJ=Wagoneer(1984-86), Cherokee(1984-86)

AR = Use as Required - = Non Illustrated Part P.A.R. = Paint as Required

PANELS, DOOR TRIM 4 DOOR WAGON SJ WAGONEER
Figure 48-1200

81J 048 1200

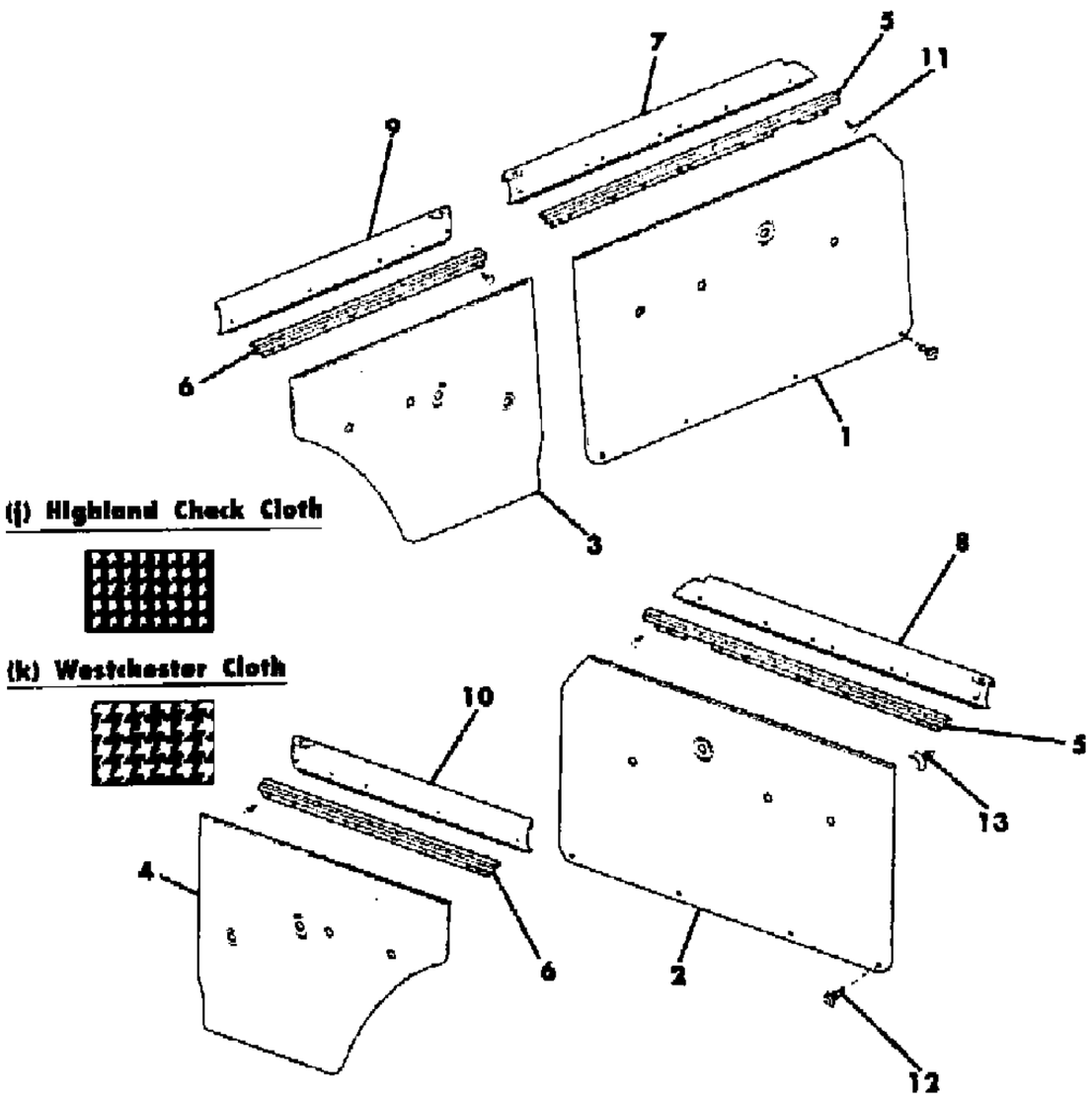

ITEM	PART NUMBER	QTY	BODY	MODEL	DESCRIPTION
10					MOULDING, Trim Panel
	J575 7548	1			1981-85
	5501 1078	1			1986
	J546 9699	1			1981-86: EXPORT
11	J400 4812	16			SCREW
12					SCREW
	J400 1776	14			.56"
	J400 3095	14			.75"
13	J400 6176	28			FASTENER
14	J400 6179	28			FASTENER
15	J098 1372	14			FASTENER

MODEL CODES

16=Cherokee 2 Dr.(1981-83)	78=Cherokee 4WD-4 Dr.(1984-86)	64=Comanche 2WD-6 Ft. Box(1986)	25=J-10 Truck 7 Ft. Box(1981-84)
17=Cherokee 2 Dr.(1981-83)	85=CJ-5 (1981-83)	66=Comanche 2WD-7 Ft. Box(1986)	26=J10 Truck 8 Ft. Box(1981-86)
73=Cherokee 2WD-2 Dr.(1984-86)	86=CJ-6(1981)	63=Comanche 4WD-6 Ft. Box(1986)	27=J-20 Truck 8 Ft. Box(1981-86)
74=Cherokee 2WD-4 Dr.(1984-86)	87=CJ-7(1981-86)	65=Comanche 4WD-7 Ft. Box(1986)	15=Wagoneer 4 Dr.(1981-83)
18=Cherokee 4 Dr.(1981-83)	88=CJ-8, Scrambler(1981-86)	15=Grand Wagoneer 4 Dr.(1984-86)	75=Wagoneer 4WD-4 Dr.(1984-86)
77=Cherokee 4WD-2 Dr.(1984-86)			

BODY
CJ=CJ-5, CJ-6, CJ-7, CJ-8, Scrambler(1981-86)
MJ=Comanche Pickup(1986)

STYLES
SJ=Wagoneer(1981-83), Grand Wagoneer(1984-86), Cherokee(1981-83), J-10, J-20(1981-86)
XJ=Wagoneer(1984-86), Cherokee(1984-86)

AR = Use as Required - = Non Illustrated Part P.A.R. = Paint as Required

« RETURN TO GROUP INDEX

PANELS, DOOR TRIM J10, J20
Figure 48-1300

81J 048 1300

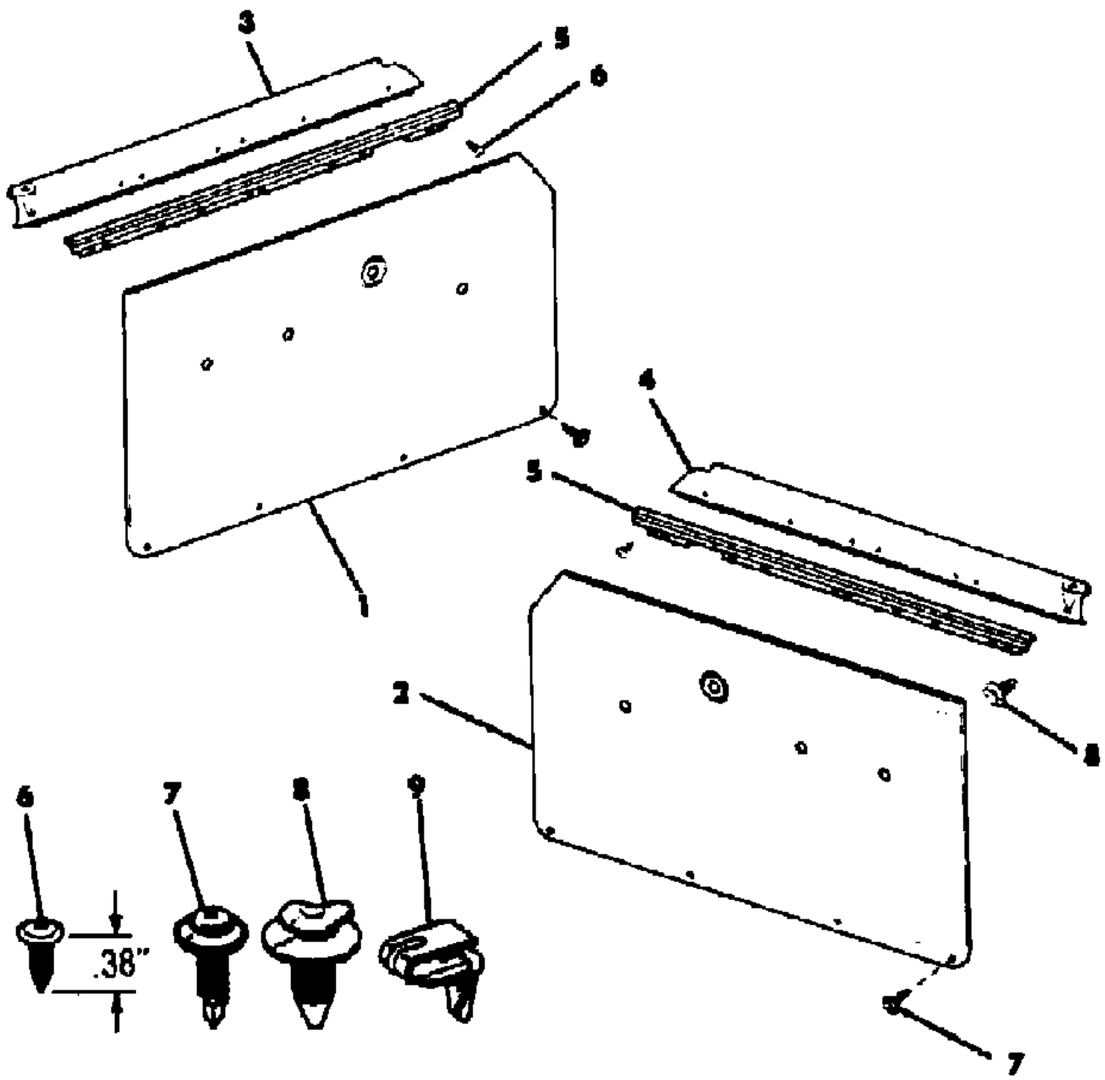

ITEM	PART NUMBER	QTY	BODY	MODEL	DESCRIPTION
1					PANEL, Door Trim
	J575 3853	1			Coded "1AD"or"1AH"or"1DD", 1981-83
	J575 7513	1			Coded "1AE"or"1DE"
	J576 4933	1			Coded "1AH", 1984-86
	J576 4915	1			Coded "1AN"
	J576 4921	1			Coded "1AW"
	J575 7541	1			Coded "1DK"or"1EJ", 1981-83
	J576 4921	1			Coded "1DQ"or"1DW"
	J576 4929	1			Coded "1EJ", 1984-86
	J575 3855	1			Coded "3AD"or"3AH"or"3DD", 1981
	J576 0149	1			Coded"3AD"or"3AH"or"3DD", 1982-83
	J575 7515	1			Coded "3AE"or"3DE", 1981
	J576 0147	1			Coded "3AE"or"3DE", 1982-83
	J575 7503	1			Coded "5AH", 1981-82
	J576 4937	1			Coded "5AH", 1984-86
	J576 4925	1			Coded "5AW"or"5DW"
	J575 7517	1			Coded "5DE"
	J575 7543	1			Coded "5DQ"or"5EJ", 1981-83
	J576 4931	1			Coded "5DQ"or"5EJ", 1984-86
	J575 7501	1			Coded "6AD"or"6AH"or"6DD", 1981-83
	J575 7519	1			Coded "6AE"or"6DE"
	J576 4935	1			Coded "6AH", 1984-86
	J576 4917	1			Coded "6AN"
	J576 4923	1			Coded "6AW"or"6DW"
	J576 6153	1			Coded "9AH"
	J576 6129	1			Coded "9AN"
	5501 2829	1			Coded "9AT"
	J576 6133	1			Coded "9AW"
2					PANEL, Door Trim
	J575 3854	1			Coded "1AD"or"1AH"or"1DD", 1981-83
	J575 7512	1			Coded "1AE"or"1DE"
	J576 4932	1			Coded "1AH", 1984-86
	J576 4914	1			Coded "1AN"
	J576 4920	1			Coded "1AW"
	J575 7540	1			Coded "1DK"or"1EJ", 1981-83
	J576 4920	1			Coded "1DQ"or"1DW"
	J576 4928	1			Coded "1EJ", 1984-86
	J575 3856	1			Coded "3AD"or"3AH"or"3DD", 1981
	J576 0148	1			Coded "3AD"or"3AH"or"3DD", 1982-83

MODEL CODES

16=Cherokee 2 Dr.(1981-83)
17=Cherokee 2 Dr.(1981-83)
73=Cherokee 2WD-2 Dr.(1984-86)
74=Cherokee 2WD-4 Dr.(1984-86)
18=Cherokee 4 Dr.(1981-83)
77=Cherokee 4WD-2 Dr.(1984-86)
78=Cherokee 4WD-4 Dr.(1984-86)
85=CJ-5 (1981-83)
86=CJ-6(1981)
87=CJ-7(1981-86)
88=CJ-8, Scrambler(1981-86)
64=Comanche 2WD-6 Ft. Box(1986)
66=Comanche 2WD-7 Ft. Box(1986)
63=Comanche 4WD-6 Ft. Box(1986)
65=Comanche 4WD-7 Ft. Box(1986)
15=Grand Wagoneer 4 Dr.(1984-86)
25=J-10 Truck 7 Ft. Box(1981-84)
26=J10 Truck 8 Ft. Box(1981-86)
27=J-20 Truck 8 Ft. Box(1981-86)
15=Wagoneer 4 Dr.(1981-83)
75=Wagoneer 4WD-4 Dr.(1984-86)

BODY
CJ=CJ-5, CJ-6, CJ-7, CJ-8, Scrambler(1981-86)
MJ=Comanche Pickup(1986)

STYLES
SJ=Wagoneer(1981-83), Grand Wagoneer(1984-86), Cherokee(1981-83), J-10, J-20(1981-86)
XJ=Wagoneer(1984-86), Cherokee(1984-86)

AR = Use as Required - = Non Illustrated Part P.A.R. = Paint as Required

PANELS, DOOR TRIM J10, J20
Figure 48-1300

81J 048 1300

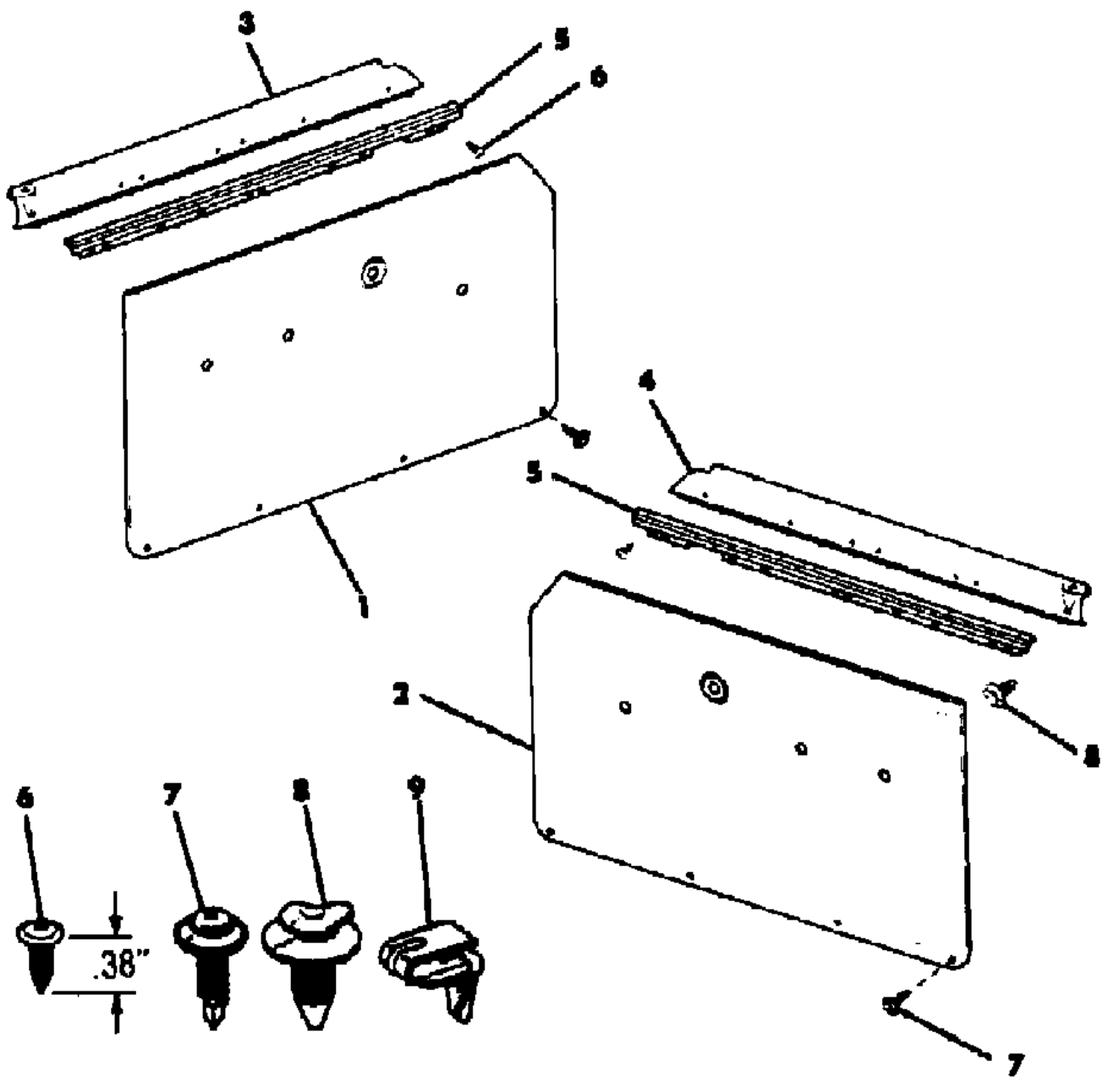

ITEM	PART NUMBER	QTY	BODY	MODEL	DESCRIPTION
	J575 7514	1			Coded "3AE"or"3DE", 1981
	J576 0146	1			Coded "3AE"or"3DE", 1982-83
	J575 7502	1			Coded "5AH", 1981-82
	J576 4936	1			Coded "5AH", 1984-86
	J576 4924	1			Coded "5AW"or"5DW"
	J575 7516	1			Coded "5DE"
	J575 7542	1			Coded "5DK"or"5EJ",1981-83
	J576 4930	1			Coded "5DQ"or"5EJ", 1984-86
	J575 7500	1			Coded "6AD"or"6AH"or"6DD", 1981-82
	J575 7518	1			Coded "6AE"or"6DE"
	J576 4934	1			Coded "6AH", 1984-86
	J576 4916	1			Coded "6AN"
	J576 4922	1			Coded "6AW"or"6DW"
	J576 6152	1			Coded "9AH"
	J576 6128	1			Coded "9AN"
	5501 2828	1			Coded "9AT"
	J576 6132	1			Coded "9AW"
3					MOULDING, Trim Panel
	J575 0833	1			Black
	J575 7551	1			Nutmeg
4					MOULDING, Trim Panel
	J575 0832	1			Black
	J575 7550	1			Nutmeg
5	J098 1842	2			RETAINER, Trim Panel
6	J400 4812	10			SCREW
7					SCREW
	J400 1776	14			.56"
	J400 3095	14			.75"
8	J400 6176	14			FASTENER
9	J098 1372	14			FASTENER

MODEL CODES

16=Cherokee 2 Dr.(1981-83)
17=Cherokee 2 Dr.(1981-83)
73=Cherokee 2WD-2 Dr.(1984-86)
74=Cherokee 2WD-4 Dr.(1984-86)
18=Cherokee 4 Dr.(1981-83)
77=Cherokee 4WD-2 Dr.(1984-86)
78=Cherokee 4WD-4 Dr.(1984-86)
85=CJ-5 (1981-83)
86=CJ-6(1981)
87=CJ-7(1981-86)
88=CJ-8, Scrambler(1981-86)
64=Comanche 2WD-6 Ft. Box(1986)
66=Comanche 2WD-7 Ft. Box(1986)
63=Comanche 4WD-6 Ft. Box(1986)
65=Comanche 4WD-7 Ft. Box(1986)
15=Grand Wagoneer 4 Dr.(1984-86)
25=J-10 Truck 7 Ft. Box(1981-84)
26=J10 Truck 8 Ft. Box(1981-86)
27=J-20 Truck 8 Ft. Box(1981-86)
15=Wagoneer 4 Dr.(1981-83)
75=Wagoneer 4WD-4 Dr.(1984-86)

BODY
CJ=CJ-5, CJ-6, CJ-7, CJ-8, Scrambler(1981-86)
MJ=Comanche Pickup(1986)

STYLES
SJ=Wagoneer(1981-83), Grand Wagoneer(1984-86), Cherokee(1981-83), J-10, J-20(1981-86)
XJ=Wagoneer(1984-86), Cherokee(1984-86)

AR = Use as Required - = Non Illustrated Part P.A.R. = Paint as Required

« RETURN TO GROUP INDEX

INTERIOR TRIM PARTS, DOOR SJ CHEROKEE, SJ WAGONEER, J10, J20
Figure 48-1400

81J 048 1400

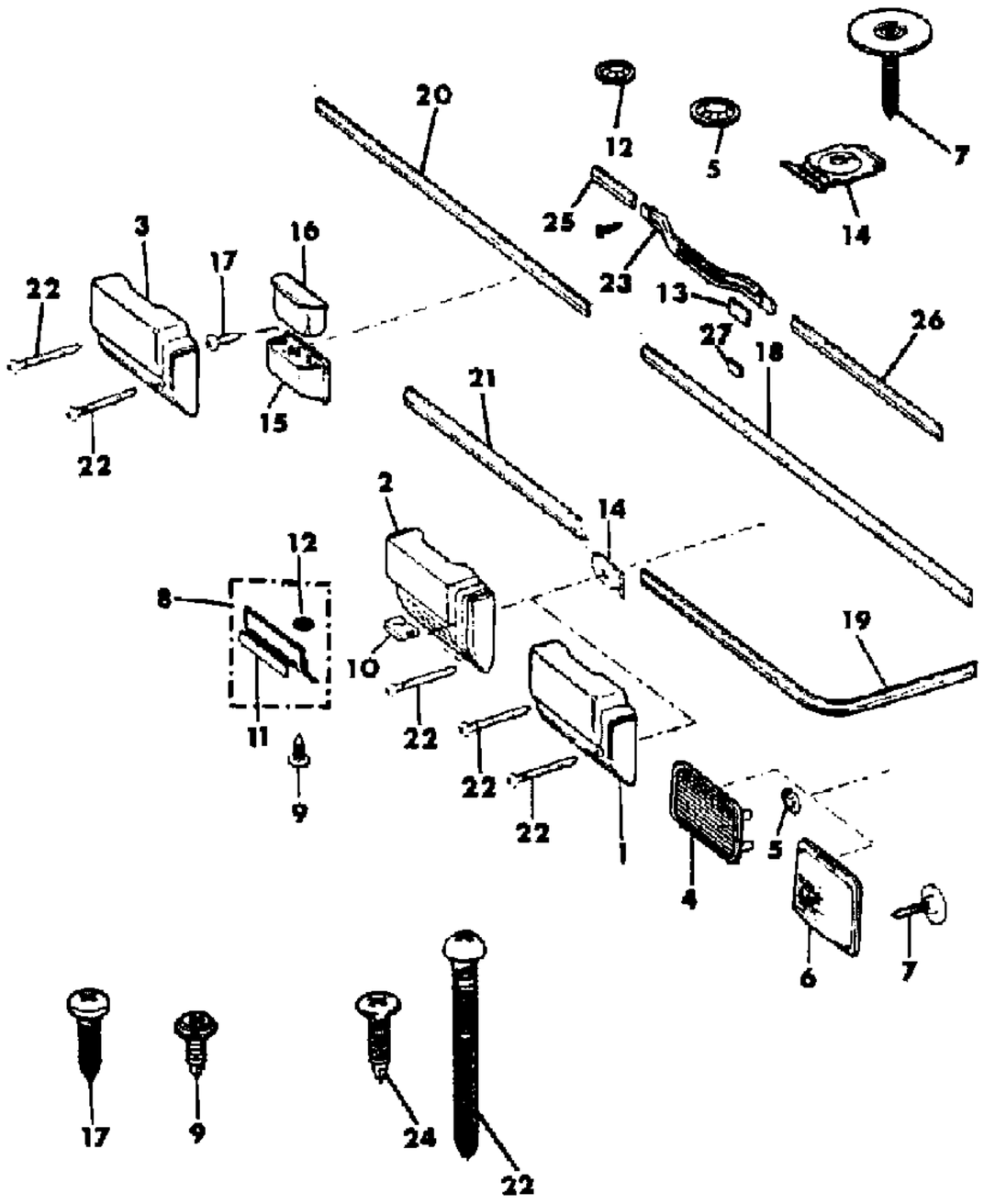

ITEM	PART NUMBER	QTY	BODY	MODEL	DESCRIPTION
1					ARMREST
	3500 4812	2			Almond
	J372 8218	2			Beige
	J371 6550	2			Black
	J371 6552	2			Medium Blue
	J374 1618	2			Slate Blue
	3500 4814	2			Honey
	J373 8682	2			Nutmeg
2					ARMREST
	3500 4819	2			Almond
	J372 8220	2			Beige
	J372 4054	2			Black
	J372 4056	2			Medium Blue
	J374 1630	2			Slate Blue
	3500 4816	2			Garnet
	3500 4822	2			Honey
	J373 7339	2			Nutmeg
3					ARMREST
	3500 4802	2			Almond
	J372 8214	2			Beige
	J371 7249	2			Black
	J371 7250	2			Medium Blue
	J374 1646	2			Slate Blue
	3500 4800	2			Garnet
	3500 4804	2			Honey
	J373 7336	2			Nutmeg
4					GRILLE, Speaker
	J373 4839	2			Plain Finish, P.A.R.
	J373 9240	2			Textured Grain Finish, P.A.R.
	J813 3665	2			Used with Speaker Magnet Coded "20003"or"20004"
5	J448 9486	AR			FASTENER
6					GRILLE, Speaker
	3501 4002	2			Garnet
	3501 4013	2			Honey
7	3420 2419	8			SCREW
8					INSERT, Armrest
	J373 5330	2			Woodgrain, 1981-85
	5501 1327	2			Woodgrain, 1986
	J575 7802	2			Chrome

MODEL CODES

16=Cherokee 2 Dr.(1981-83)
17=Cherokee 2 Dr.(1981-83)
73=Cherokee 2WD-2 Dr.(1984-86)
74=Cherokee 2WD-4 Dr.(1984-86)
18=Cherokee 4 Dr.(1981-83)
77=Cherokee 4WD-2 Dr.(1984-86)
78=Cherokee 4WD-4 Dr.(1984-86)
85=CJ-5 (1981-83)
86=CJ-6(1981)
87=CJ-7(1981-86)
88=CJ-8, Scrambler(1981-86)
64=Comanche 2WD-6 Ft. Box(1986)
66=Comanche 2WD-7 Ft. Box(1986)
63=Comanche 4WD-6 Ft. Box(1986)
65=Comanche 4WD-7 Ft. Box(1986)
15=Grand Wagoneer 4 Dr.(1984-86)
25=J-10 Truck 7 Ft. Box(1981-84)
26=J10 Truck 8 Ft. Box(1981-86)
27=J-20 Truck 8 Ft. Box(1981-86)
15=Wagoneer 4 Dr.(1981-83)
75=Wagoneer 4WD-4 Dr.(1984-86)

BODY
CJ=CJ-5, CJ-6, CJ-7, CJ-8, Scrambler(1981-86)
MJ=Comanche Pickup(1986)

STYLES
SJ=Wagoneer(1981-83), Grand Wagoneer(1984-86), Cherokee(1981-83), J-10, J-20(1981-86)
XJ=Wagoneer(1984-86), Cherokee(1984-86)

AR = Use as Required - = Non Illustrated Part P.A.R. = Paint as Required

« RETURN TO GROUP INDEX »

81J 048 1400

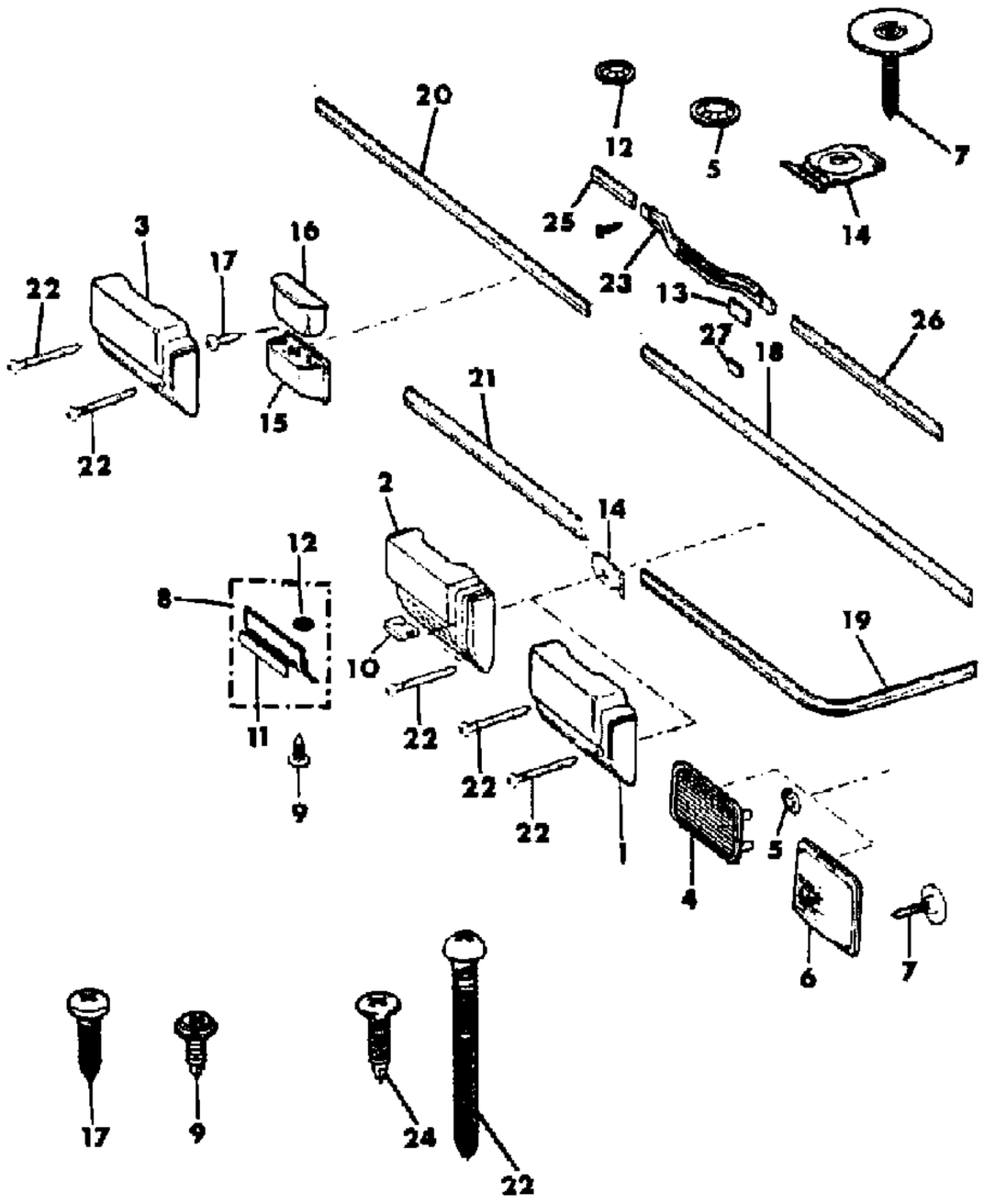

ITEM	PART NUMBER	QTY	BODY	MODEL	DESCRIPTION
9	J400 4642	4			SCREW
10	J943 3155	4			NUT, U-Type
11	J373 5331	2			REFLECTOR, Insert ***
12	J400 1714	4			NUT, Push
13	J546 9693	8			CAP, End
14	J400 4058	8			NUT, Spring
15	J366 6148	2			COVER, Ashtray, P.A.R.
16	J364 9527	2			ASHTRAY ***
17	J448 9490	6			SCREW
18	J545 8964	2			MOULDING, Door
19					MOULDING, Door
					Right
	J575 7534	1			1981-85
	5501 1068	1			1986
					Left
	J575 7535	1			1981-85
	5501 1069	1			1986
20					MOULDING, Door
	J575 7537	2			1981-85
	5501 1067	2			1986
21					MOULDING, Door
	J575 7538	2			1981-85
	5501 1086	2			1986
22					SCREW
	S016 2113	8			2.00"
	J045 0614	8			2.25"
	J400 6193	8			2.50"
23					HANDLE, Assist
	J576 4972	4			Almond
	J575 7578	4			Beige
	J575 4934	2			Black
	J576 6163	4			Garnet
	J576 6162	4			Honey
	J575 7579	4			Nutmeg, Limited
	J575 5781	2			Nutmeg, without Limited
24					SCREW
	J400 4920	8			.875"
	J400 6634	16			1.000"
25					MOULDING, Door

MODEL CODES
16=Cherokee 2 Dr.(1981-83)
17=Cherokee 2 Dr.(1981-83)
73=Cherokee 2WD-2 Dr.(1984-86)
74=Cherokee 2WD-4 Dr.(1984-86)
18=Cherokee 4 Dr.(1981-83)
77=Cherokee 4WD-2 Dr.(1984-86)
78=Cherokee 4WD-4 Dr.(1984-86)
85=CJ-5 (1981-83)
86=CJ-6(1981)
87=CJ-7(1981-86)
88=CJ-8, Scrambler(1981-86)
64=Comanche 2WD-6 Ft. Box(1986)
66=Comanche 2WD-7 Ft. Box(1986)
63=Comanche 4WD-6 Ft. Box(1986)
65=Comanche 4WD-7 Ft. Box(1986)
15=Grand Wagoneer 4 Dr.(1984-86)
25=J-10 Truck 7 Ft. Box(1981-84)
26=J10 Truck 8 Ft. Box(1981-86)
27=J-20 Truck 8 Ft. Box(1981-86)
15=Wagoneer 4 Dr.(1981-83)
75=Wagoneer 4WD-4 Dr.(1984-86)

BODY
CJ=CJ-5, CJ-6, CJ-7, CJ-8, Scrambler(1981-86)
MJ=Comanche Pickup(1986)

STYLES
SJ=Wagoneer(1981-83), Grand Wagoneer(1984-86), Cherokee(1981-83), J-10, J-20(1981-86)
XJ=Wagoneer(1984-86), Cherokee(1984-86)

AR = Use as Required - = Non Illustrated Part P.A.R. = Paint as Required

81J 048 1400

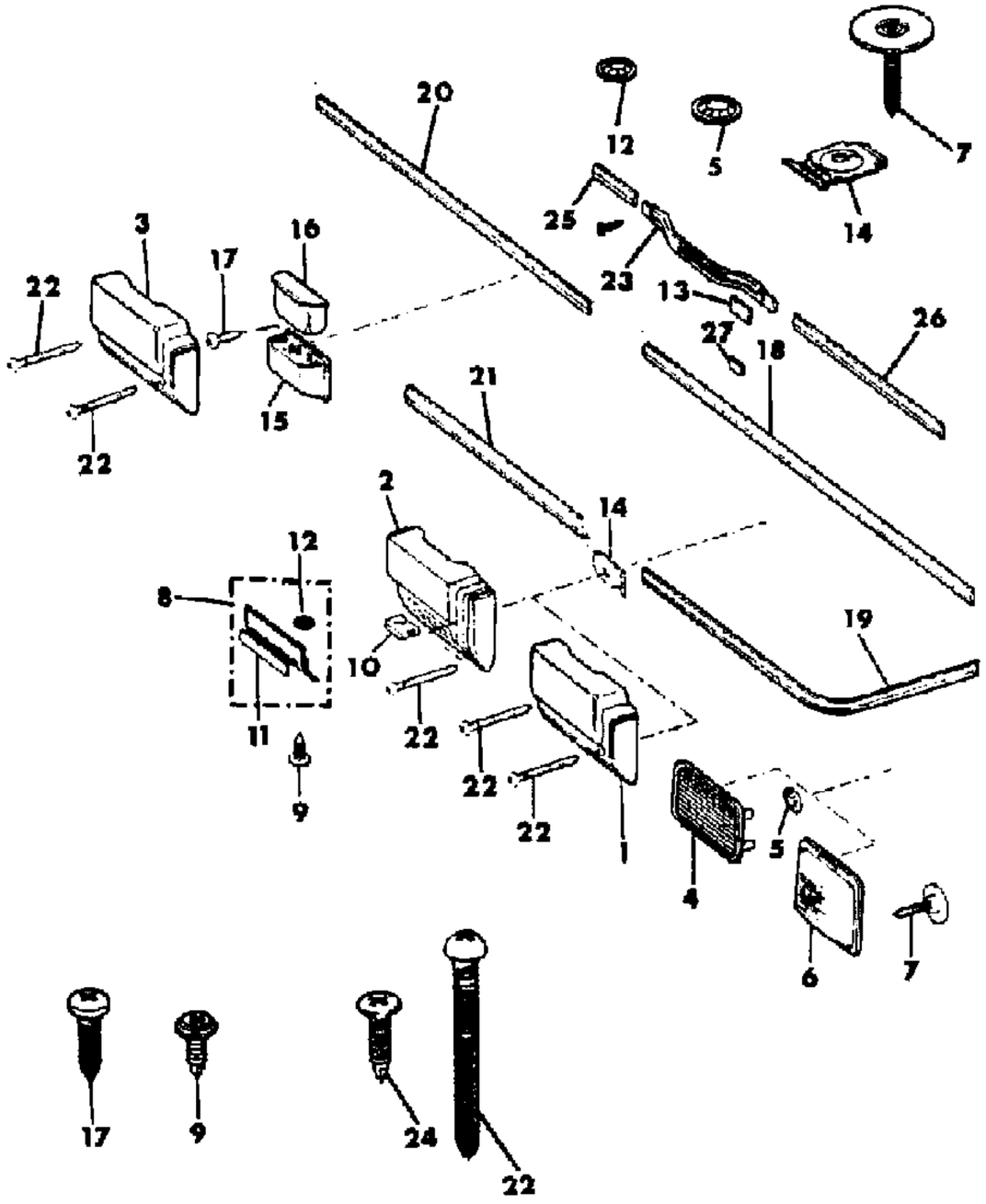

ITEM	PART NUMBER	QTY	BODY	MODEL	DESCRIPTION
	J575 7536	2			1981-85
	5501 1066	2			1986
26					MOULDING, Door
					Right
	J575 7532	1			1981-82
	J576 3348	1			1983-85
	5501 1070	1			1986
					Left
	J575 7533	1			1981-82
	J576 3349	1			1983-85
	5501 1071	1			1986
27					INSERT
	J575 7580	8			Woodgrain, 1981-85
	5501 1074	8			Woodgrain, 1986
	J575 4936	4			Brushed Aluminum

MODEL CODES

16=Cherokee 2 Dr.(1981-83)	78=Cherokee 4WD-4 Dr.(1984-86)	64=Comanche 2WD-6 Ft. Box(1986)	25=J-10 Truck 7 Ft. Box(1981-84)
17=Cherokee 2 Dr.(1981-83)	85=CJ-5 (1981-83)	66=Comanche 2WD-7 Ft. Box(1986)	26=J10 Truck 8 Ft. Box(1981-86)
73=Cherokee 2WD-2 Dr.(1984-86)	86=CJ-6(1981)	63=Comanche 4WD-6 Ft. Box(1986)	27=J-20 Truck 8 Ft. Box(1981-86)
74=Cherokee 2WD-4 Dr.(1984-86)	87=CJ-7(1981-86)	65=Comanche 4WD-7 Ft. Box(1986)	15=Wagoneer 4 Dr.(1981-83)
18=Cherokee 4 Dr.(1981-83)	88=CJ-8, Scrambler(1981-86)	15=Grand Wagoneer 4 Dr.(1984-86)	75=Wagoneer 4WD-4 Dr.(1984-86)
77=Cherokee 4WD-2 Dr.(1984-86)			

BODY
CJ=CJ-5, CJ-6, CJ-7, CJ-8, Scrambler(1981-86)
MJ=Comanche Pickup(1986)

STYLES
SJ=Wagoneer(1981-83), Grand Wagoneer(1984-86), Cherokee(1981-83), J-10, J-20(1981-86)
XJ=Wagoneer(1984-86), Cherokee(1984-86)

AR = Use as Required - = Non Illustrated Part P.A.R. = Paint as Required

FRAME, PAD, AND COVERS FRONT SEAT CENTER CUSHION AND ARMREST SJ CHEROKEE, SJ WAGONEER
Figure 48-1500

81J48 1500A

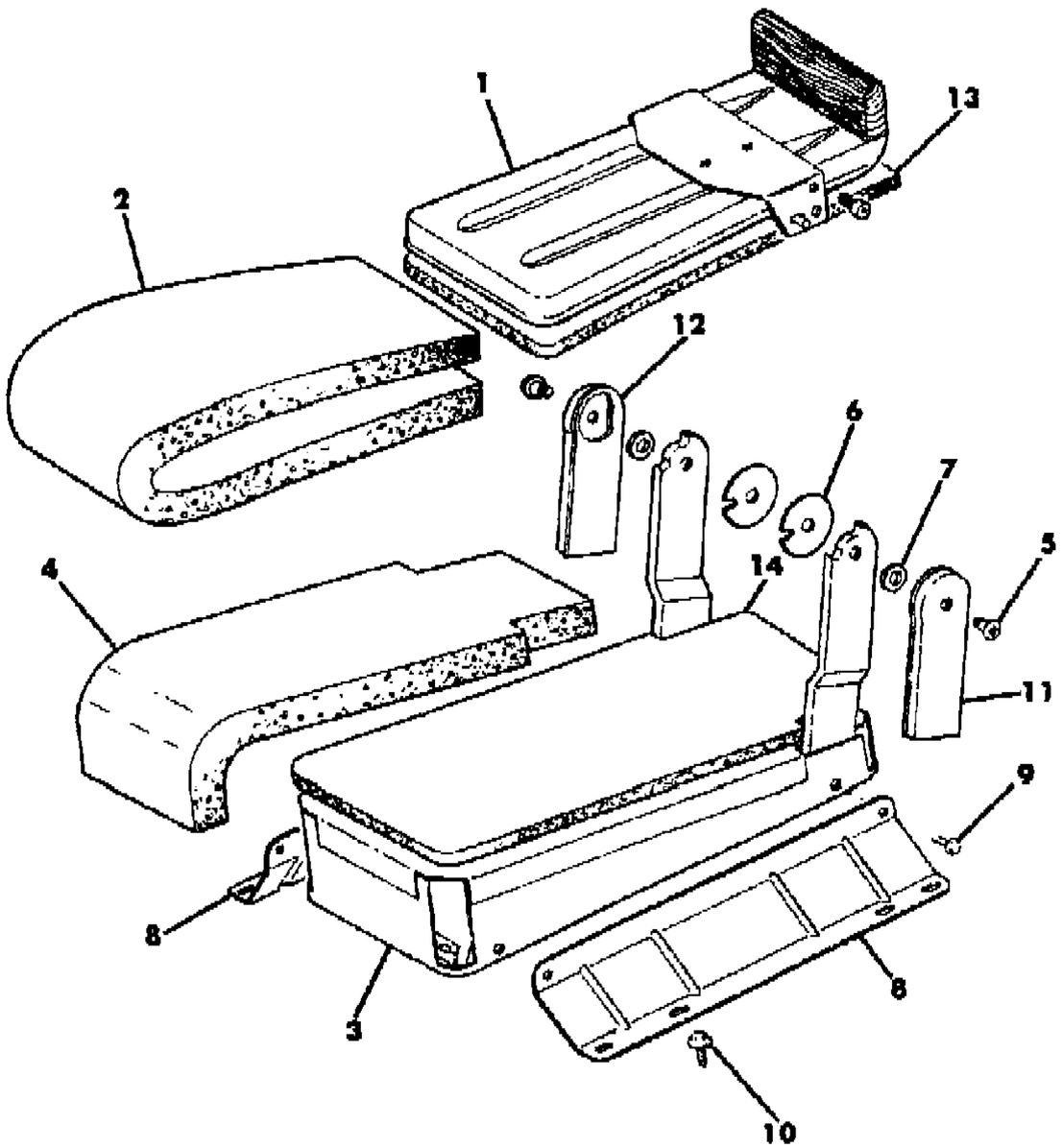

ITEM	PART NUMBER	QTY	BODY	MODEL	DESCRIPTION
1	J575 5613	1			FRAME, Back
2	J545 2137	1			PAD, Back
3	J545 2147	1			FRAME, Cushion
4	J545 2154	1			PAD, Cushion
5					SCREW
	J400 6131	2			Pivoting Armrest
	J400 6814	2			Fixed Armrest
6	J352 0016	2			PROTECTOR
7	J400 1104	2			WASHER
8	J545 6380	2			SUPPORT
9	J400 3931	4			SCREW
10	J400 4455	4			SCREW
11	J545 5029	1			COVER, Bracket, P.A.R.
12	J545 5030	1			COVER, Bracket, P.A.R.
13	J545 4866	1			PAD, Back
14	J545 2153	1			PAD, Cushion

MODEL CODES

16=Cherokee 2 Dr.(1981-83)	78=Cherokee 4WD-4 Dr.(1984-86)	64=Comanche 2WD-6 Ft. Box(1986)	25=J-10 Truck 7 Ft. Box(1981-84)
17=Cherokee 2 Dr.(1981-83)	85=CJ-5 (1981-83)	66=Comanche 2WD-7 Ft. Box(1986)	26=J10 Truck 8 Ft. Box(1981-86)
73=Cherokee 2WD-2 Dr.(1984-86)	86=CJ-6(1981)	63=Comanche 4WD-6 Ft. Box(1986)	27=J-20 Truck 8 Ft. Box(1981-86)
74=Cherokee 2WD-4 Dr.(1984-86)	87=CJ-7(1981-86)	65=Comanche 4WD-7 Ft. Box(1986)	15=Wagoneer 4 Dr.(1981-83)
18=Cherokee 4 Dr.(1981-83)	88=CJ-8, Scrambler(1981-86)	15=Grand Wagoneer 4 Dr.(1984-86)	75=Wagoneer 4WD-4 Dr.(1984-86)
77=Cherokee 4WD-2 Dr.(1984-86)			

BODY
CJ=CJ-5, CJ-6, CJ-7, CJ-8, Scrambler(1981-86)
MJ=Comanche Pickup(1986)

STYLES
SJ=Wagoneer(1981-83), Grand Wagoneer(1984-86), Cherokee(1981-83), J-10, J-20(1981-86)
XJ=Wagoneer(1984-86), Cherokee(1984-86)

AR = Use as Required - = Non Illustrated Part P.A.R. = Paint as Required

« RETURN TO GROUP INDEX

FRAME AND PAD FRONT BENCH SEAT, LEFT HAND DRIVE SJ CHEROKEE, SJ WAGONEER
Figure 48-1600

81J48 1600A

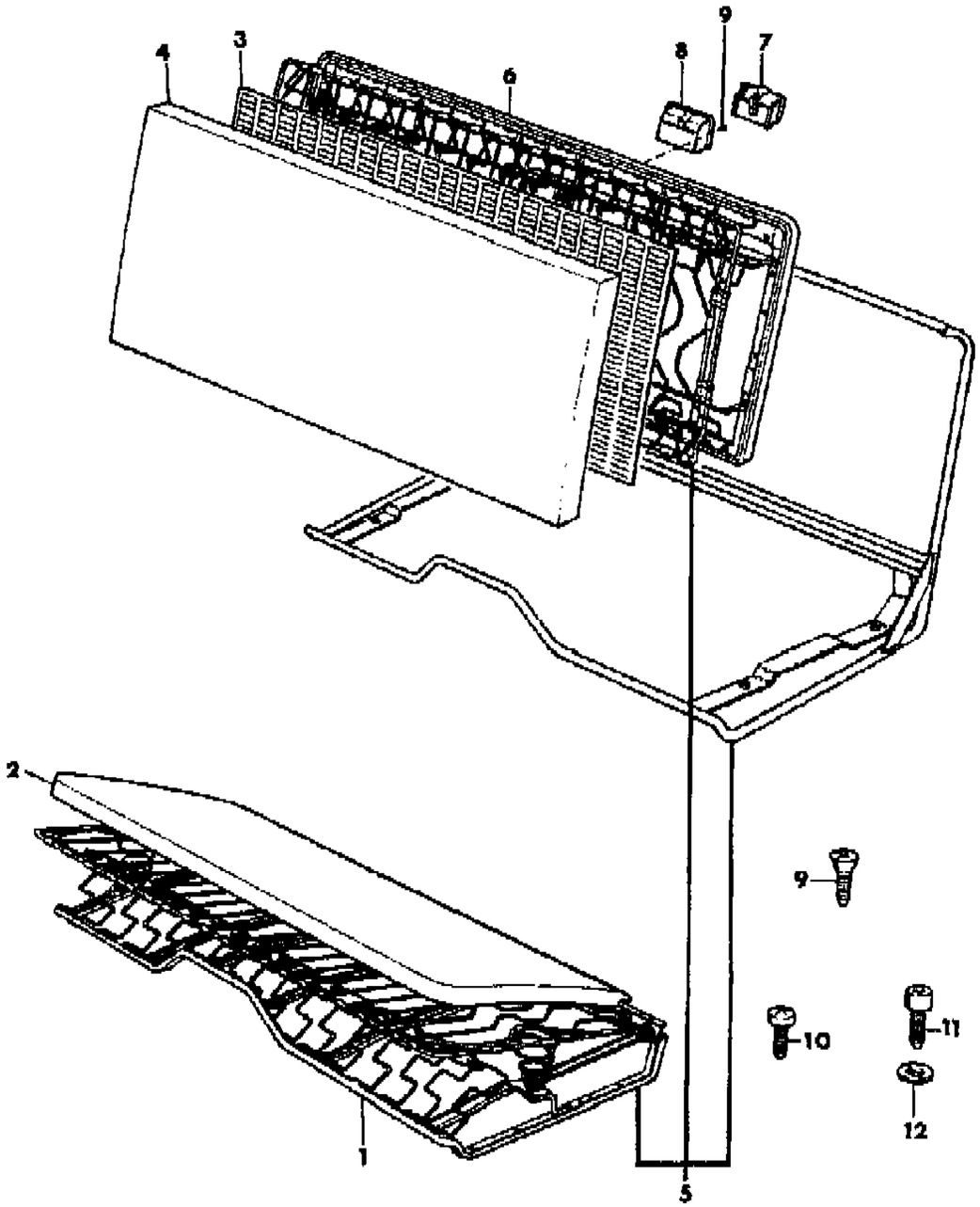

ITEM	PART NUMBER	QTY	BODY	MODEL	DESCRIPTION
1	J546 1206	1			SPRING, Cushion
2	J546 1249	1			PAD, Cushion
3	J546 1250	1			PROTECTOR
4	J545 0863	1			PAD, Back
5					FRAME, Seat
	J575 3975	1			1981
	J576 0907	1			1982
6	J575 4524	1			SPRING, Back
7	J096 0655	1			ASHTRAY ***
8	J095 9077	1			RETAINER, Ashtray
9	J941 4732	2			SCREW
10	J016 3162	2			SCREW
11					SCREW
	J400 4554	2			.44"
	J045 4783	2			.50"
12	J044 6188	2			WASHER

MODEL CODES

16=Cherokee 2 Dr.(1981-83)
17=Cherokee 2 Dr.(1981-83)
73=Cherokee 2WD-2 Dr.(1984-86)
74=Cherokee 2WD-4 Dr.(1984-86)
18=Cherokee 4 Dr.(1981-83)
77=Cherokee 4WD-2 Dr.(1984-86)
78=Cherokee 4WD-4 Dr.(1984-86)
85=CJ-5 (1981-83)
86=CJ-6(1981)
87=CJ-7(1981-86)
88=CJ-8, Scrambler(1981-86)
64=Comanche 2WD-6 Ft. Box(1986)
66=Comanche 2WD-7 Ft. Box(1986)
63=Comanche 4WD-6 Ft. Box(1986)
65=Comanche 4WD-7 Ft. Box(1986)
15=Grand Wagoneer 4 Dr.(1984-86)
25=J-10 Truck 7 Ft. Box(1981-84)
26=J10 Truck 8 Ft. Box(1981-86)
27=J-20 Truck 8 Ft. Box(1981-86)
15=Wagoneer 4 Dr.(1981-83)
75=Wagoneer 4WD-4 Dr.(1984-86)

BODY
CJ=CJ-5, CJ-6, CJ-7, CJ-8, Scrambler(1981-86)
MJ=Comanche Pickup(1986)

STYLES
SJ=Wagoneer(1981-83), Grand Wagoneer(1984-86), Cherokee(1981-83), J-10, J-20(1981-86)
XJ=Wagoneer(1984-86), Cherokee(1984-86)

AR = Use as Required - = Non Illustrated Part P.A.R. = Paint as Required

« RETURN TO GROUP INDEX

COVERS, UPHOLSTERY FRONT BENCH SEAT SJ CHEROKEE, SJ WAGONEER
Figure 48-1700

81J 048 1700

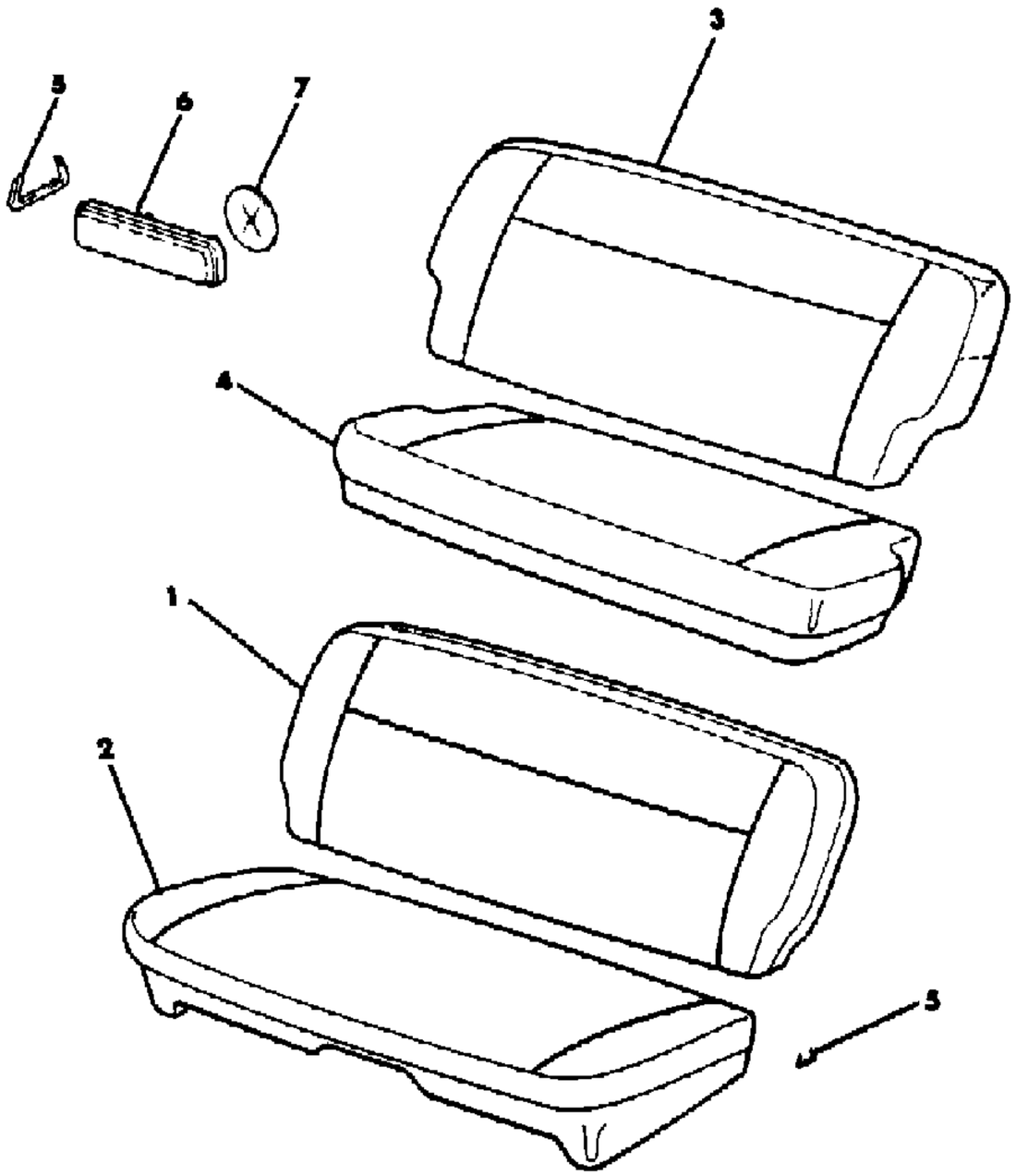

ITEM	PART NUMBER	QTY	BODY	MODEL	DESCRIPTION
1					COVER, Back
	J575 4545	1			Coded "1AD"or"1AM", 1981-82
	J576 2777	1			Coded "1AD", 1983
	J575 5137	1			Coded "1AF", 1981-82
	J576 2784	1			Coded "1AF", 1983
	J575 5133	1			Coded "1AH", 1981-82
	J576 2780	1			Coded "1AH", 1983
	J575 4546	1			Coded "3AD"or"3AM", 1981
	J576 0921	1			Coded "3AD"or"3AM", 1982
	J575 5134	1			Coded "3AH", 1981
	J576 0922	1			Coded "3AH", 1982
	J575 5140	1			Coded "5AF", 1981-82
	J576 2786	1			Coded "5AF", 1983
	J575 5136	1			Coded "5AH", 1981-82
	J576 2782	1			Coded "5AH", 1983
	J576 4852	1			Coded "5AN"
	J575 5141	1			Coded "6AD"or"6AM", 1981-82
	J576 2779	1			Coded "6AD", 1983
	J575 5139	1			Coded "6AF", 1981-82
	J576 2787	1			Coded "6AF", 1983
	J575 5135	1			Coded "6AH", 1981-82
	J576 2783	1			Coded "6AH", 1983
	J576 4851	1			Coded "6AN"
	J576 6290	1			Coded "9AN"
2					COVER, Cushion
	J575 4051	1			Coded "1AD"or"1AM", 1981-82
	J576 2795	1			Coded "1AD", 1983
	J575 5128	1			Coded "1AF", 1981-82
	J576 2802	1			Coded "1AF", 1983
	J575 5124	1			Coded "1AH", 1981-82
	J576 2798	1			Coded "1AH", 1983
	J575 4052	1			Coded "3AD"or"3AM", 1981
	J576 0924	1			Coded "3AD"or"3AM", 1982
	J575 5129	1			Coded "3AF", 1981
	J576 0926	1			Coded "3AF", 1982
	J575 5125	1			Coded "3AH", 1981
	J576 0925	1			Coded "3AH", 1982
	J575 5131	1			Coded "5AF", 1981-82
	J576 2804	1			Coded "5AF", 1983

MODEL CODES

16=Cherokee 2 Dr.(1981-83)
17=Cherokee 2 Dr.(1981-83)
73=Cherokee 2WD-2 Dr.(1984-86)
74=Cherokee 2WD-4 Dr.(1984-86)
18=Cherokee 4 Dr.(1981-83)
77=Cherokee 4WD-2 Dr.(1984-86)
78=Cherokee 4WD-4 Dr.(1984-86)
85=CJ-5 (1981-83)
86=CJ-6(1981)
87=CJ-7(1981-86)
88=CJ-8, Scrambler(1981-86)
64=Comanche 2WD-6 Ft. Box(1986)
66=Comanche 2WD-7 Ft. Box(1986)
63=Comanche 4WD-6 Ft. Box(1986)
65=Comanche 4WD-7 Ft. Box(1986)
15=Grand Wagoneer 4 Dr.(1984-86)
25=J-10 Truck 7 Ft. Box(1981-84)
26=J10 Truck 8 Ft. Box(1981-86)
27=J-20 Truck 8 Ft. Box(1981-86)
15=Wagoneer 4 Dr.(1981-83)
75=Wagoneer 4WD-4 Dr.(1984-86)

BODY
CJ=CJ-5, CJ-6, CJ-7, CJ-8, Scrambler(1981-86)
MJ=Comanche Pickup(1986)

STYLES
SJ=Wagoneer(1981-83), Grand Wagoneer(1984-86), Cherokee(1981-83), J-10, J-20(1981-86)
XJ=Wagoneer(1984-86), Cherokee(1984-86)

AR = Use as Required - = Non Illustrated Part P.A.R. = Paint as Required

COVERS, UPHOLSTERY FRONT BENCH SEAT SJ CHEROKEE, SJ WAGONEER
Figure 48-1700

81J 048 1700

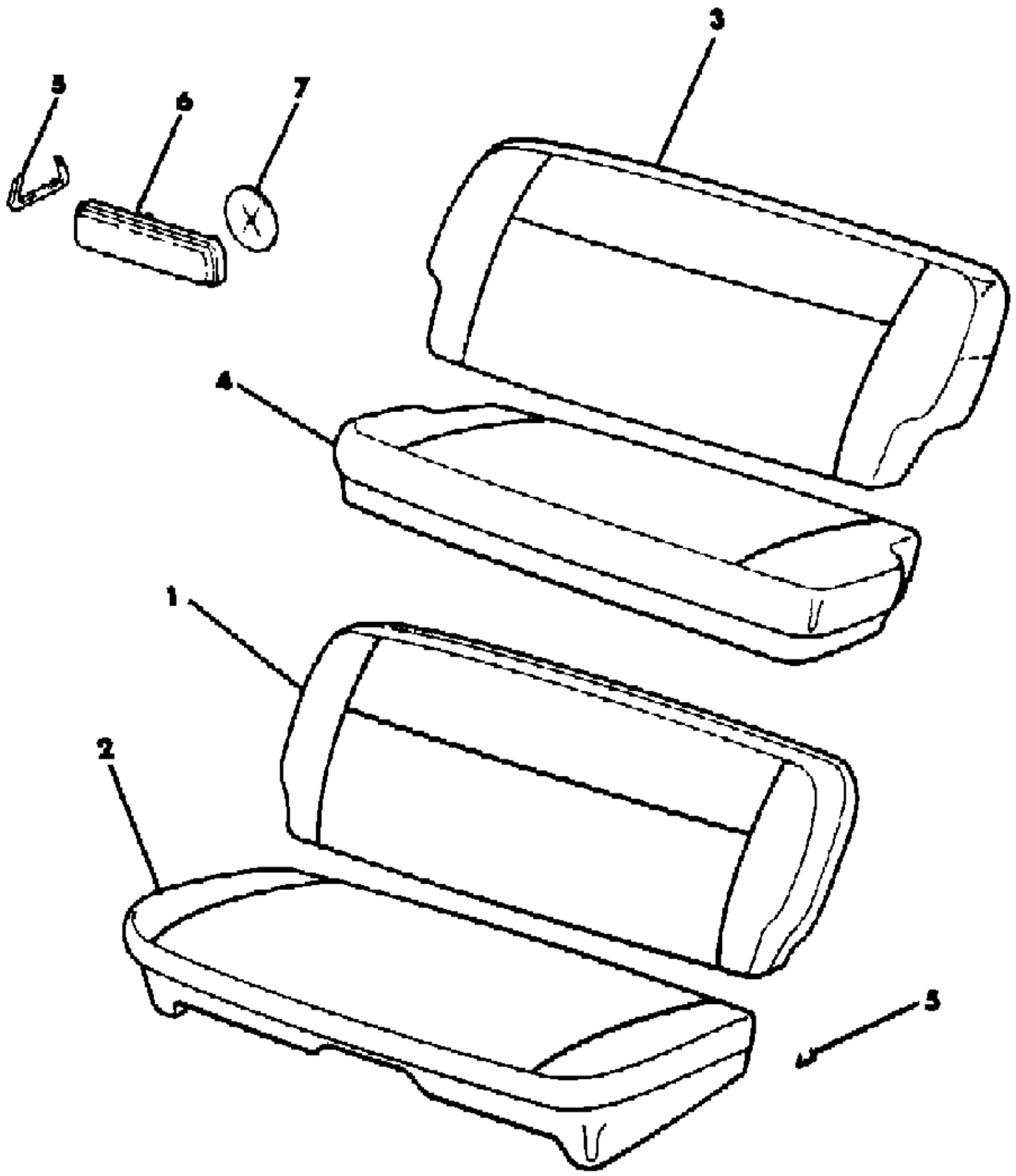

ITEM	PART NUMBER	QTY	BODY	MODEL	DESCRIPTION
	J575 5127	1			Coded "5AH", 1981-82
	J576 2800	1			Coded "5AH", 1983
	J576 4850	1			Coded "5AN"
	J575 5132	1			Coded "6AD"or"6AM", 1981-82
	J576 2797	1			Coded "6AD", 1983
	J575 5130	1			Coded "6AF", 1981-82
	J576 2805	1			Coded "6AF", 1983
	J575 5126	1			Coded "6AH", 1981-82
	J576 2801	1			Coded "6AH", 1983
	J576 4849	1			Coded "6AN"
	J576 6294	1			Coded "9AN"
3					COVER, Back
	J546 5206	1			Coded "1AD"or"1AM", 1981-82
	J576 2279	1			Coded "1AD", 1983
	J575 6507	1			Coded "1AF", 1981-82
	J576 2282	1			Coded "1AF", 1983
	J575 6499	1			Coded "1AH", 1981-82
	J576 2288	1			Coded "1AH", 1983
	J546 5207	1			Coded "3AD"or"3AM", 1981
	J576 0689	1			Coded "3AD"or"3AM", 1982
	J575 6508	1			Coded "3AF", 1981
	J576 0697	1			Coded "3AF", 1982
	J575 6500	1			Coded "3AH", 1981
	J576 0695	1			Coded "3AH", 1982
	J575 6509	1			Coded "5AF", 1981-82
	J576 2284	1			Coded "5AF", 1983
	J575 6501	1			Coded "5AH", 1981-82
	J576 2290	1			Coded "5AH", 1983
	J576 4805	1			Coded "5AN"
	J575 6472	1			Coded "6AD"or"6AM", 1981-82
	J576 2281	1			Coded "6AD", 1983
	J575 6510	1			Coded "6AF", 1981-82
	J576 2285	1			Coded "6AF", 1983
	J575 6502	1			Coded "6AH", 1981-82
	J576 2291	1			Coded "6AH", 1983
	J576 4804	1			Coded "6AN"
	J576 6352	1			Coded "9AN"
4					COVER, Cushion
	J546 5203	1			Coded "1AD"or"1AM", 1981-82

MODEL CODES

16=Cherokee 2 Dr.(1981-83)
17=Cherokee 2 Dr.(1981-83)
73=Cherokee 2WD-2 Dr.(1984-86)
74=Cherokee 2WD-4 Dr.(1984-86)
18=Cherokee 4 Dr.(1981-83)
77=Cherokee 4WD-2 Dr.(1984-86)
78=Cherokee 4WD-4 Dr.(1984-86)
85=CJ-5 (1981-83)
86=CJ-6(1981)
87=CJ-7(1981-86)
88=CJ-8, Scrambler(1981-86)
64=Comanche 2WD-6 Ft. Box(1986)
66=Comanche 2WD-7 Ft. Box(1986)
63=Comanche 4WD-6 Ft. Box(1986)
65=Comanche 4WD-7 Ft. Box(1986)
15=Grand Wagoneer 4 Dr.(1984-86)
25=J-10 Truck 7 Ft. Box(1981-84)
26=J10 Truck 8 Ft. Box(1981-86)
27=J-20 Truck 8 Ft. Box(1981-86)
15=Wagoneer 4 Dr.(1981-83)
75=Wagoneer 4WD-4 Dr.(1984-86)

BODY
CJ=CJ-5, CJ-6, CJ-7, CJ-8, Scrambler(1981-86)
MJ=Comanche Pickup(1986)

STYLES
SJ=Wagoneer(1981-83), Grand Wagoneer(1984-86), Cherokee(1981-83), J-10, J-20(1981-86)
XJ=Wagoneer(1984-86), Cherokee(1984-86)

AR = Use as Required - = Non Illustrated Part P.A.R. = Paint as Required

COVERS, UPHOLSTERY FRONT BENCH SEAT SJ CHEROKEE, SJ WAGONEER
Figure 48-1700

81J 048 1700

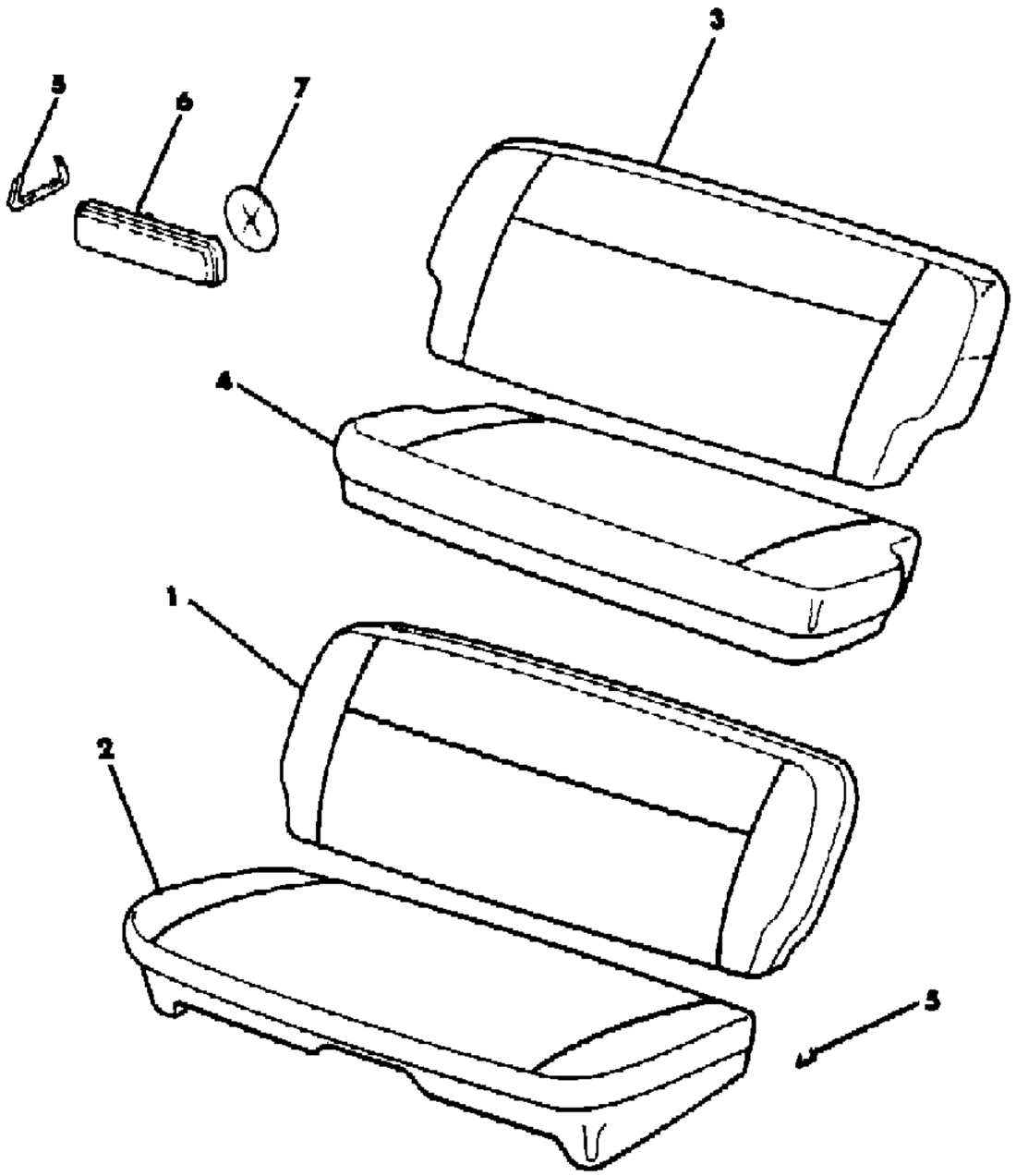

ITEM	PART NUMBER	QTY	BODY	MODEL	DESCRIPTION
	J576 2266	1			Coded "1AD", 1983
	J575 6503	1			Coded "1AF", 1981-82
	J576 2269	1			Coded "1AF", 1983
	J575 6495	1			Coded "1AH", 1981-82
	J576 2275	1			Coded "1AH", 1983
	J546 5204	1			Coded "3AD"or"3AM", 1981
	J576 0688	1			Coded "3AD"or"3AM", 1982
	J575 6504	1			Coded "3AF", 1981
	J576 0696	1			Coded "3AF", 1982
	J575 6496	1			Coded "3AH", 1981
	J576 0694	1			Coded "3AH", 1982
	J575 6505	1			Coded "5AF", 1981-82
	J576 2271	1			Coded "5AF", 1983
	J575 6497	1			Coded "5AH", 1981-82
	J576 2277	1			Coded "5AH", 1983
	J576 2277	1			Coded "5AH", 1983
	J576 4803	1			Coded "5AN"
	J575 6469	1			Coded "6AD"or"6AM", 1981-82
	J576 2268	1			Coded "6AD", 1983
	J575 6506	1			Coded "6AF", 1981-82
	J576 2272	1			Coded "6AF", 1983
	J575 6498	1			Coded "6AH", 1981-82
	J576 2278	1			Coded "6AH", 1983
	J576 4802	1			Coded "6AN"
	J576 6351	1			Coded "9AN"
5	J436 3256	AR			RING
6					BUTTON, Trim
	3500 5248	AR			Almond
	J373 4274	AR			Beige
	J372 4698	AR			Black
	J372 3584	AR			Medium Blue
	J374 1380	AR			Slate Blue
	3500 5249	AR			Honey
	J373 4275	AR			Nutmeg, 1981-83
	5500 5169	AR			Nutmeg, 1984-86
7	J400 5214	AR			RETAINER

MODEL CODES

16=Cherokee 2 Dr.(1981-83)
17=Cherokee 2 Dr.(1981-83)
73=Cherokee 2WD-2 Dr.(1984-86)
74=Cherokee 2WD-4 Dr.(1984-86)
18=Cherokee 4 Dr.(1981-83)
77=Cherokee 4WD-2 Dr.(1984-86)
78=Cherokee 4WD-4 Dr.(1984-86)
85=CJ-5 (1981-83)
86=CJ-6(1981)
87=CJ-7(1981-86)
88=CJ-8, Scrambler(1981-86)
64=Comanche 2WD-6 Ft. Box(1986)
66=Comanche 2WD-7 Ft. Box(1986)
63=Comanche 4WD-6 Ft. Box(1986)
65=Comanche 4WD-7 Ft. Box(1986)
15=Grand Wagoneer 4 Dr.(1984-86)
25=J-10 Truck 7 Ft. Box(1981-84)
26=J10 Truck 8 Ft. Box(1981-86)
27=J-20 Truck 8 Ft. Box(1981-86)
15=Wagoneer 4 Dr.(1981-83)
75=Wagoneer 4WD-4 Dr.(1984-86)

BODY
CJ=CJ-5, CJ-6, CJ-7, CJ-8, Scrambler(1981-86)
MJ=Comanche Pickup(1986)

STYLES
SJ=Wagoneer(1981-83), Grand Wagoneer(1984-86), Cherokee(1981-83), J-10, J-20(1981-86)
XJ=Wagoneer(1984-86), Cherokee(1984-86)

AR = Use as Required - = Non Illustrated Part P.A.R. = Paint as Required

« RETURN TO GROUP INDEX

FRAME AND PAD FRONT BENCH SEAT TRUCK, RIGHT HAND DRIVE WAGON SJ CHEROKEE, SJ WAGONEER, J10, J20
Figure 48-1800

81J 048 1800

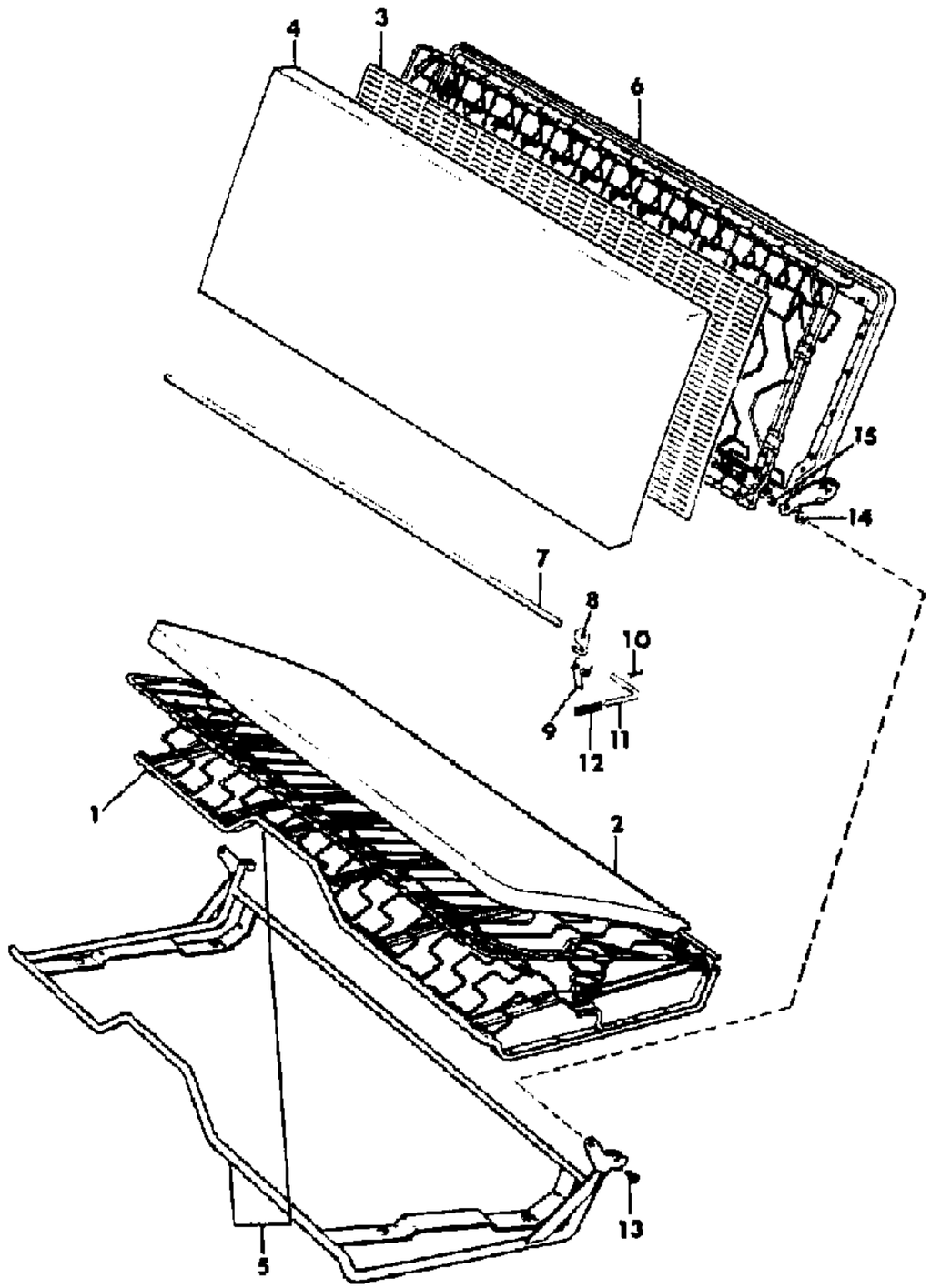

ITEM	PART NUMBER	QTY	BODY	MODEL	DESCRIPTION
1	J546 1206	1			SPRING, Cushion
2	J546 1249	1			PAD, Cushion
3	J546 1250	1			PROTECTOR
4	J545 0863	1			PAD, Back
5	J575 3976	1			FRAME, Cushion
6	J546 1280	1			FRAME, Back
7	J546 1497	1			BAR, Latch
8	J545 8764	2			PAWL, Locking
9	J545 8766	2			SPRING, Latch
10	J400 4295	2			PIN, Hitch
11	J546 1494	2			ROD, Latch Release
12	J546 1704	2			KNOB, Seat Latch
13	J400 3577	2			SCREW
14	J400 4437	2			WASHER
15	J941 3447	2			NUT

MODEL CODES

16=Cherokee 2 Dr.(1981-83)
17=Cherokee 2 Dr.(1981-83)
73=Cherokee 2WD-2 Dr.(1984-86)
74=Cherokee 2WD-4 Dr.(1984-86)
18=Cherokee 4 Dr.(1981-83)
77=Cherokee 4WD-2 Dr.(1984-86)
78=Cherokee 4WD-4 Dr.(1984-86)
85=CJ-5 (1981-83)
86=CJ-6(1981)
87=CJ-7(1981-86)
88=CJ-8, Scrambler(1981-86)
64=Comanche 2WD-6 Ft. Box(1986)
66=Comanche 2WD-7 Ft. Box(1986)
63=Comanche 4WD-6 Ft. Box(1986)
65=Comanche 4WD-7 Ft. Box(1986)
15=Grand Wagoneer 4 Dr.(1984-86)
25=J-10 Truck 7 Ft. Box(1981-84)
26=J10 Truck 8 Ft. Box(1981-86)
27=J-20 Truck 8 Ft. Box(1981-86)
15=Wagoneer 4 Dr.(1981-83)
75=Wagoneer 4WD-4 Dr.(1984-86)

BODY
CJ=CJ-5, CJ-6, CJ-7, CJ-8, Scrambler(1981-86)
MJ=Comanche Pickup(1986)

STYLES
SJ=Wagoneer(1981-83), Grand Wagoneer(1984-86), Cherokee(1981-83), J-10, J-20(1981-86)
XJ=Wagoneer(1984-86), Cherokee(1984-86)

AR = Use as Required - = Non Illustrated Part P.A.R. = Paint as Required

« RETURN TO GROUP INDEX

COVERS, UPHOLSTERY FRONT BENCH SEAT J10, J20
Figure 48-1900

81J 048 1900

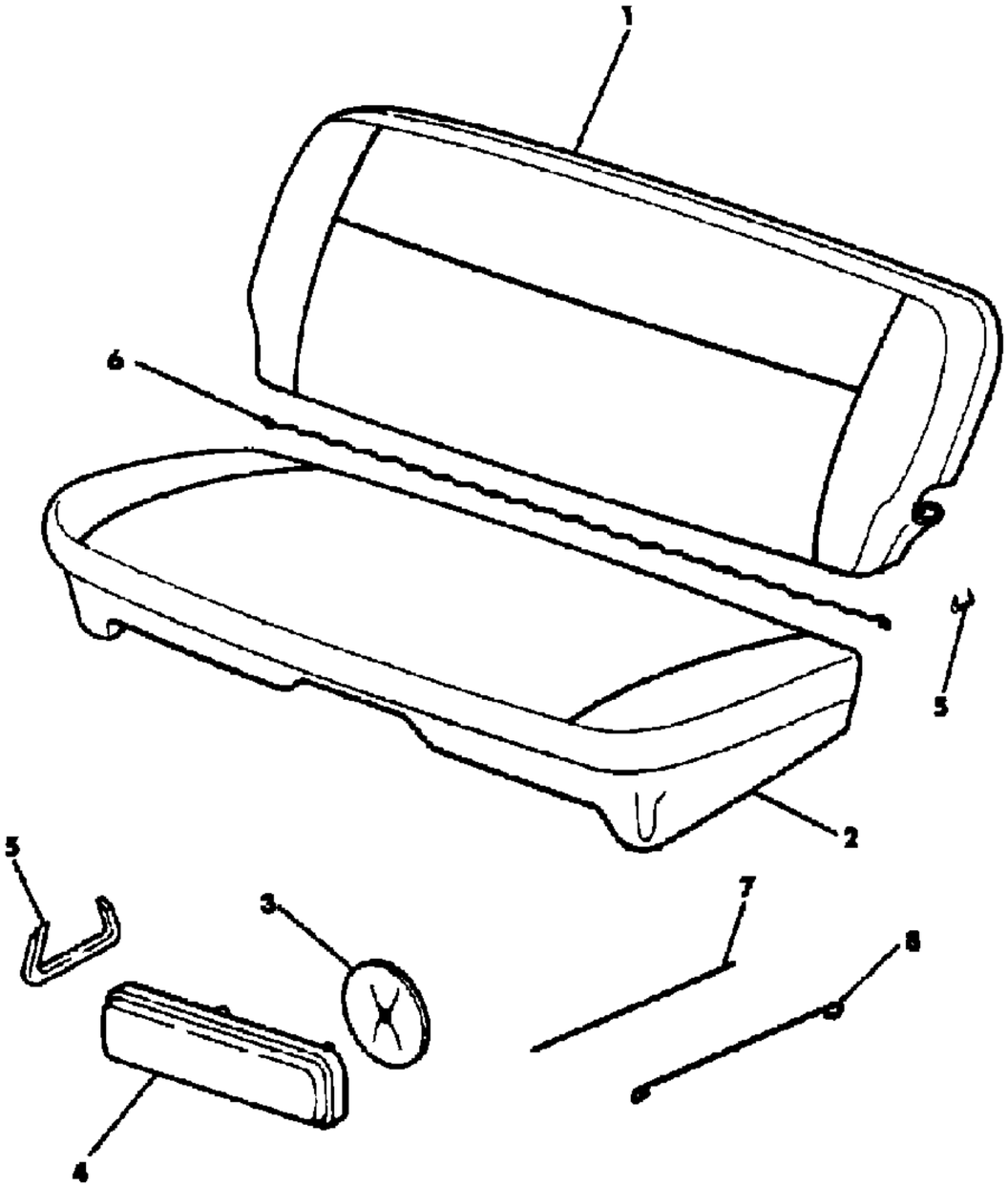

ITEM	PART NUMBER	QTY	BODY	MODEL	DESCRIPTION
1					COVER, Back
	J546 5212	1			Coded "1AD", 1981-82
	J576 2806	1			Coded "1AD", 1983
	J575 5414	1			Coded "1AE"
	J575 5156	1			Coded "1AH", 1981-82
	J576 2809	1			Coded "1AH", 1983
	J576 4818	1			Coded "1AH", 1984-86
	J576 4814	1			Coded "1AN"
	J576 4824	1			Coded "1AW"
	J546 5213	1			Coded "3AD", 1981
	J576 0931	1			Coded "3AD", 1982
	J576 2807	1			Coded "3AD", 1983
	J575 5415	1			Coded "3AE", 1981
	J576 0933	1			Coded "3AE", 1982-83
	J575 5157	1			Coded "3AH", 1981
	J576 0932	1			Coded "3AH", 1982
	J576 2810	1			Coded "3AH", 1983
	J575 5159	1			Coded "5AH", 1981-82
	J576 2782	1			Coded "5AH", 1983
	J576 4820	1			Coded "5AH", 1984-86
	J576 4826	1			Coded "5AW"
	J575 5160	1			Coded "6AD", 1981-82
	J576 2808	1			Coded "6AD", 1983
	J575 5417	1			Coded "6AE"
	J575 5158	1			Coded "6AH", 1981-82
	J576 2812	1			Coded "6AH", 1983
	J576 4819	1			Coded "6AH", 1984-86
	J576 4815	1			Coded "6AN"
	J576 4825	1			Coded "6AW"
	J576 6292	1			Coded "9AH"
	J576 6291	1			Coded "9AN"
	5501 2744	1			Coded "9AT"
	J576 6293	1			Coded "9AW"
2					COVER, Cushion
	J575 4062	1			Coded "1AD", 1981-82
	J576 2788	1			Coded "1AD", 1983
	J575 5410	1			Coded "1AE"
	J575 5151	1			Coded "1AH", 1981-82
	J576 2791	1			Coded "1AH", 1983

MODEL CODES

16=Cherokee 2 Dr.(1981-83)
17=Cherokee 2 Dr.(1981-83)
73=Cherokee 2WD-2 Dr.(1984-86)
74=Cherokee 2WD-4 Dr.(1984-86)
18=Cherokee 4 Dr.(1981-83)
77=Cherokee 4WD-2 Dr.(1984-86)
78=Cherokee 4WD-4 Dr.(1984-86)
85=CJ-5 (1981-83)
86=CJ-6(1981)
87=CJ-7(1981-86)
88=CJ-8, Scrambler(1981-86)
64=Comanche 2WD-6 Ft. Box(1986)
66=Comanche 2WD-7 Ft. Box(1986)
63=Comanche 4WD-6 Ft. Box(1986)
65=Comanche 4WD-7 Ft. Box(1986)
15=Grand Wagoneer 4 Dr.(1984-86)
25=J-10 Truck 7 Ft. Box(1981-84)
26=J10 Truck 8 Ft. Box(1981-86)
27=J-20 Truck 8 Ft. Box(1981-86)
15=Wagoneer 4 Dr.(1981-83)
75=Wagoneer 4WD-4 Dr.(1984-86)

BODY
CJ=CJ-5, CJ-6, CJ-7, CJ-8, Scrambler(1981-86)
MJ=Comanche Pickup(1986)

STYLES
SJ=Wagoneer(1981-83), Grand Wagoneer(1984-86), Cherokee(1981-83), J-10, J-20(1981-86)
XJ=Wagoneer(1984-86), Cherokee(1984-86)

AR = Use as Required - = Non Illustrated Part P.A.R. = Paint as Required

COVERS, UPHOLSTERY FRONT BENCH SEAT J10, J20
Figure 48-1900

81J 048 1900

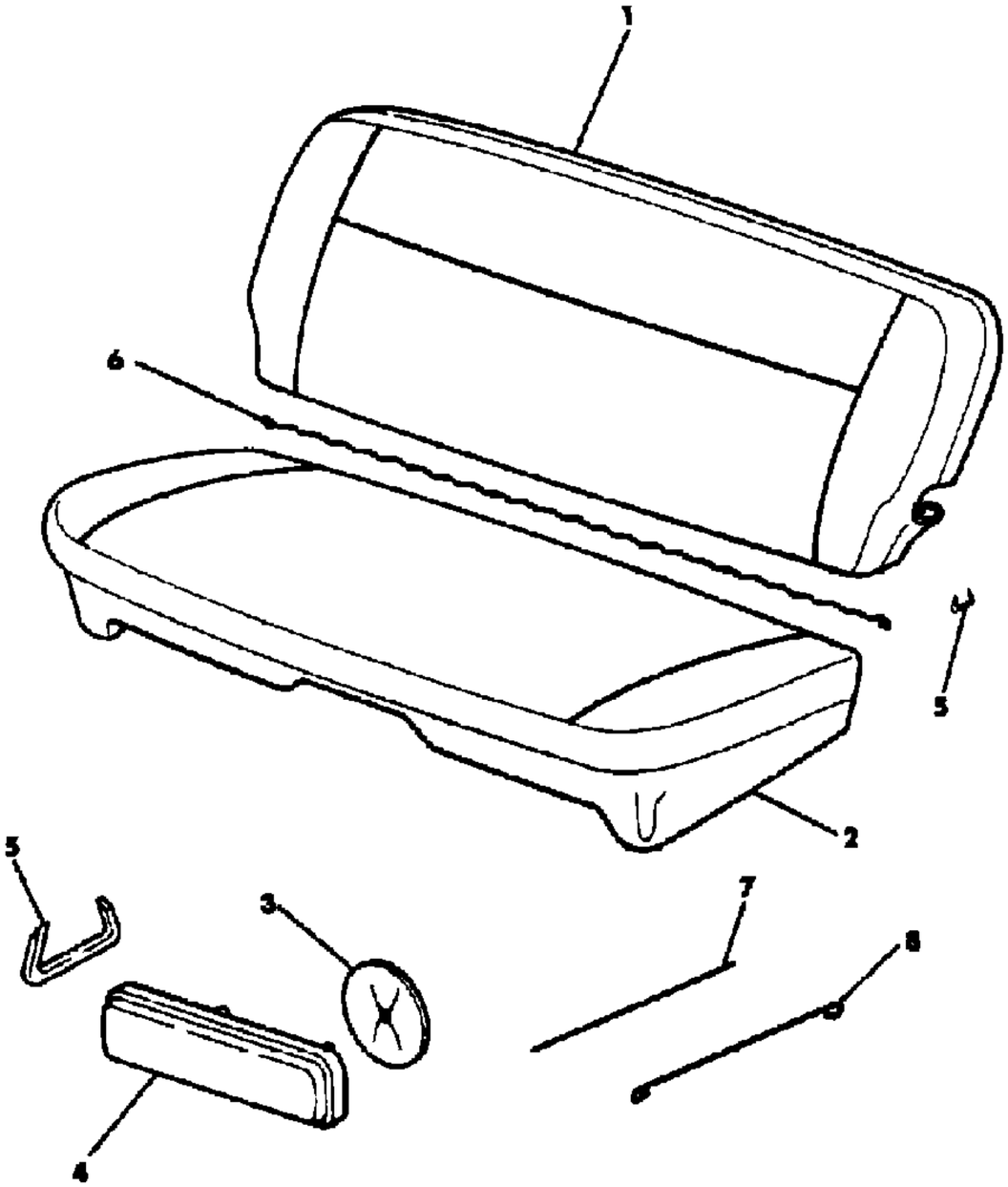

ITEM	PART NUMBER	QTY	BODY	MODEL	DESCRIPTION
	J576 4816	1			Coded "1AH", 1984-86
	J576 4812	1			Coded "1AN"
	J576 4821	1			Coded "1AW"
	J575 4063	1			Coded "3AD"
	J576 0934	1			Coded "3AD"
	J576 2789	1			Coded "3AD", 1983
	J575 5411	1			Coded "3AE", 1981
	J576 0936	1			Coded "3AE", 1982-83
	J575 5152	1			Coded "3AH", 1981
	J576 0935	1			Coded "3AH", 1982
	J576 2792	1			Coded "3AH", 1983
	J575 5154	1			Coded "5AH", 1981-82
	J576 2800	1			Coded "5AH", 1983
	J576 4855	1			Coded "5AH", 1984-86
	J576 4823	1			Coded "5AW"
	J575 5155	1			Coded "6AD", 1981-82
	J576 2790	1			Coded "6AD", 1983
	J575 5413	1			Coded "6AE"
	J575 5153	1			Coded "6AH", 1981-82
	J576 2794	1			Coded "6AH", 1983
	J576 4817	1			Coded "6AH", 1984-86
	J576 4813	1			Coded "6AN"
	J576 4822	1			Coded "6AW"
	J576 6296	1			Coded "9AH"
	J576 6295	1			Coded "9AN"
	5501 2745	1			Coded "9AT"
	J576 6297	1			Coded "9AW"
3	J400 5214	AR			RETAINER
4					BUTTON, Trim
	3500 5248	AR			Almond
	J373 4274	AR			Beige
	J372 4698	AR			Black, 1981-83
	3500 5246	AR			Black, 1984-86
	J373 3584	AR			Medium Blue
	J374 1380	AR			Slate Blue
	3500 5249	AR			Honey
	J373 4275	AR			Nutmeg, 1981-83
	5500 5169	AR			Nutmeg, 1984-86
5	J436 3256	AR			RING

MODEL CODES
16=Cherokee 2 Dr.(1981-83)
17=Cherokee 2 Dr.(1981-83)
73=Cherokee 2WD-2 Dr.(1984-86)
74=Cherokee 2WD-4 Dr.(1984-86)
18=Cherokee 4 Dr.(1981-83)
77=Cherokee 4WD-2 Dr.(1984-86)
78=Cherokee 4WD-4 Dr.(1984-86)
85=CJ-5 (1981-83)
86=CJ-6(1981)
87=CJ-7(1981-86)
88=CJ-8, Scrambler(1981-86)
64=Comanche 2WD-6 Ft. Box(1986)
66=Comanche 2WD-7 Ft. Box(1986)
63=Comanche 4WD-6 Ft. Box(1986)
65=Comanche 4WD-7 Ft. Box(1986)
15=Grand Wagoneer 4 Dr.(1984-86)
25=J-10 Truck 7 Ft. Box(1981-84)
26=J10 Truck 8 Ft. Box(1981-86)
27=J-20 Truck 8 Ft. Box(1981-86)
15=Wagoneer 4 Dr.(1981-83)
75=Wagoneer 4WD-4 Dr.(1984-86)

BODY
CJ=CJ-5, CJ-6, CJ-7, CJ-8, Scrambler(1981-86)
MJ=Comanche Pickup(1986)

STYLES
SJ=Wagoneer(1981-83), Grand Wagoneer(1984-86), Cherokee(1981-83), J-10, J-20(1981-86)
XJ=Wagoneer(1984-86), Cherokee(1984-86)

AR = Use as Required - = Non Illustrated Part P.A.R. = Paint as Required

COVERS, UPHOLSTERY FRONT BENCH SEAT J10, J20
Figure 48-1900

81J 048 1900

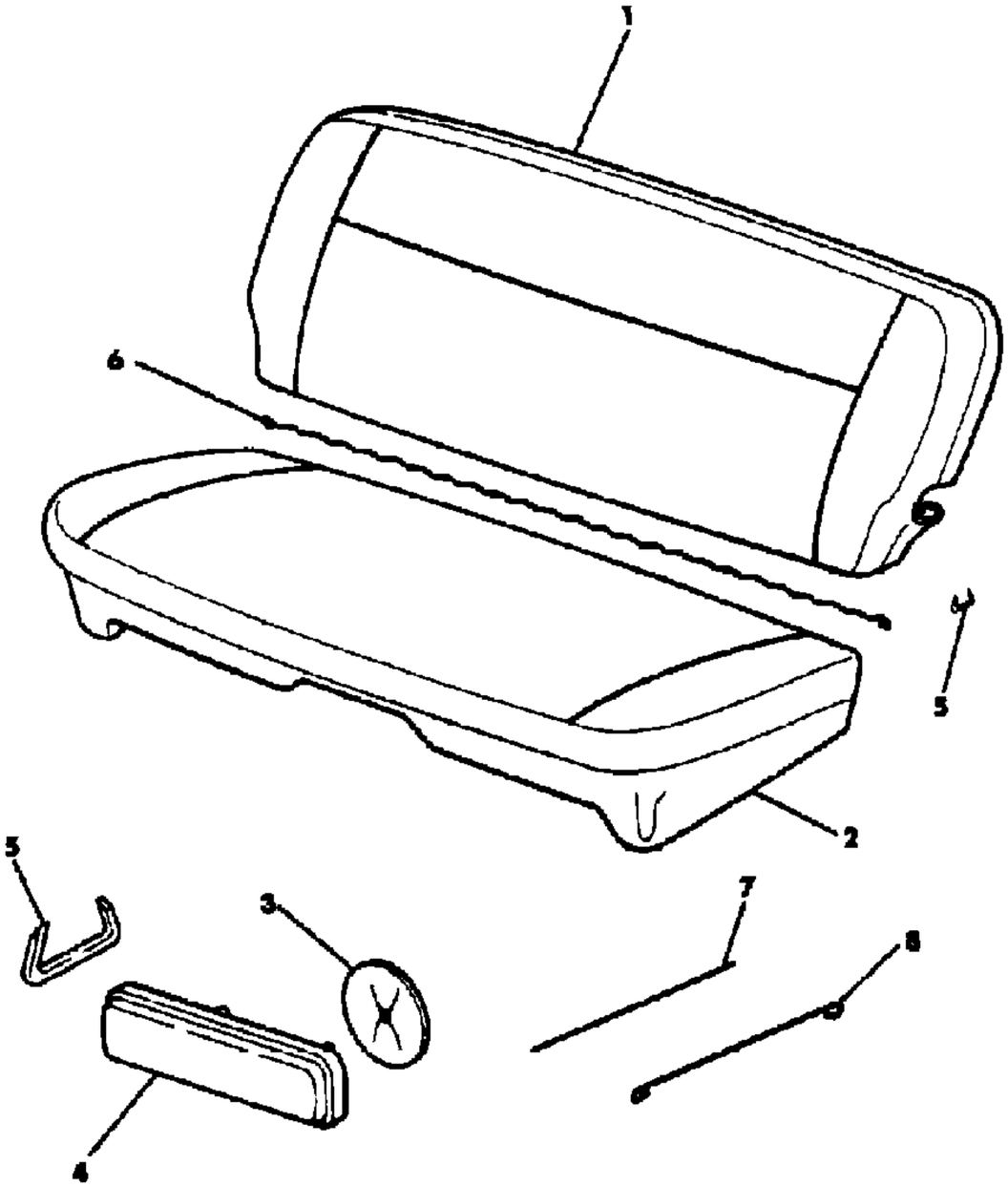

ITEM	PART NUMBER	QTY	BODY	MODEL	DESCRIPTION
6	J362 1474	1			WIRE
7					WIRE
	J096 8305	1			1981
8					WIRE
	J096 9187	2			15"
	J545 2230	2			17.50"

MODEL CODES
16=Cherokee 2 Dr.(1981-83)
17=Cherokee 2 Dr.(1981-83)
73=Cherokee 2WD-2 Dr.(1984-86)
74=Cherokee 2WD-4 Dr.(1984-86)
18=Cherokee 4 Dr.(1981-83)
77=Cherokee 4WD-2 Dr.(1984-86)
78=Cherokee 4WD-4 Dr.(1984-86)
85=CJ-5 (1981-83)
86=CJ-6(1981)
87=CJ-7(1981-86)
88=CJ-8, Scrambler(1981-86)
64=Comanche 2WD-6 Ft. Box(1986)
66=Comanche 2WD-7 Ft. Box(1986)
63=Comanche 4WD-6 Ft. Box(1986)
65=Comanche 4WD-7 Ft. Box(1986)
15=Grand Wagoneer 4 Dr.(1984-86)
25=J-10 Truck 7 Ft. Box(1981-84)
26=J10 Truck 8 Ft. Box(1981-86)
27=J-20 Truck 8 Ft. Box(1981-86)
15=Wagoneer 4 Dr.(1981-83)
75=Wagoneer 4WD-4 Dr.(1984-86)

BODY
CJ=CJ-5, CJ-6, CJ-7, CJ-8, Scrambler(1981-86)
MJ=Comanche Pickup(1986)

STYLES
SJ=Wagoneer(1981-83), Grand Wagoneer(1984-86), Cherokee(1981-83), J-10, J-20(1981-86)
XJ=Wagoneer(1984-86), Cherokee(1984-86)

AR = Use as Required - = Non Illustrated Part P.A.R. = Paint as Required

FRAME AND PAD FRONT BUCKET SEATS, FOLDING BACK SJ CHEROKEE
Figure 48-2000

81J 048 2000

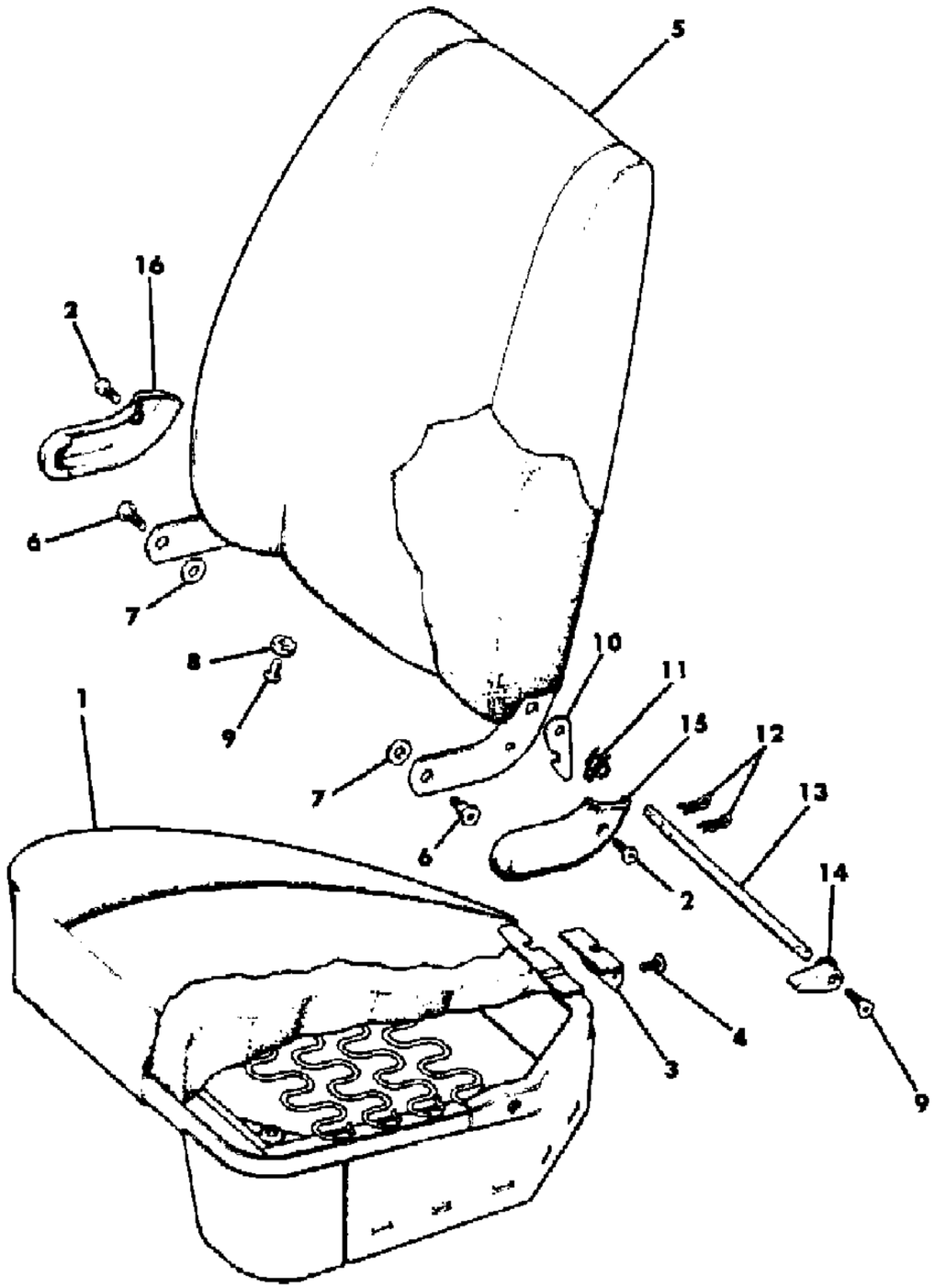

ITEM	PART NUMBER	QTY	BODY	MODEL	DESCRIPTION
1					FRAME, Cushion
	J812 7405	1			Right
	J545 8591	1			Left
2	J400 5640	AR			SCREW
3	J545 8636	2			ESCUTCHEON
4	J400 4253	2			SCREW
5					FRAME, Seat Back, Including Pad
	J545 8593	1			1981
	J576 0405	1			1982-83
6	J400 4998	2			BOLT
7	J400 1134	4			SPACER
8	J366 3544	4			STOP
9	J400 4914	4			SCREW
10	J545 8764	2			PAWL, Locking
11	J545 8766	2			SPRING, Latch
12	J400 4295	4			PIN, Locking
13	J545 8765	2			BAR, Latch
14	J545 1766	2			KNOB, Seat Latch
15	J545 8625	1			COVER, Hinge, P.A.R.
16	J545 8626	1			COVER, Hinge, P.A.R.

MODEL CODES

16=Cherokee 2 Dr.(1981-83)
17=Cherokee 2 Dr.(1981-83)
73=Cherokee 2WD-2 Dr.(1984-86)
74=Cherokee 2WD-4 Dr.(1984-86)
18=Cherokee 4 Dr.(1981-83)
77=Cherokee 4WD-2 Dr.(1984-86)
78=Cherokee 4WD-4 Dr.(1984-86)
85=CJ-5 (1981-83)
86=CJ-6(1981)
87=CJ-7(1981-86)
88=CJ-8, Scrambler(1981-86)
64=Comanche 2WD-6 Ft. Box(1986)
66=Comanche 2WD-7 Ft. Box(1986)
63=Comanche 4WD-6 Ft. Box(1986)
65=Comanche 4WD-7 Ft. Box(1986)
15=Grand Wagoneer 4 Dr.(1984-86)
25=J-10 Truck 7 Ft. Box(1981-84)
26=J10 Truck 8 Ft. Box(1981-86)
27=J-20 Truck 8 Ft. Box(1981-86)
15=Wagoneer 4 Dr.(1981-83)
75=Wagoneer 4WD-4 Dr.(1984-86)

BODY
CJ=CJ-5, CJ-6, CJ-7, CJ-8, Scrambler(1981-86)
MJ=Comanche Pickup(1986)

STYLES
SJ=Wagoneer(1981-83), Grand Wagoneer(1984-86), Cherokee(1981-83), J-10, J-20(1981-86)
XJ=Wagoneer(1984-86), Cherokee(1984-86)

AR = Use as Required - = Non Illustrated Part P.A.R. = Paint as Required

« RETURN TO GROUP INDEX

COVERS, UPHOLSTERY WITH FRONT BUCKET SEATS, 2 DOOR SJ CHEROKEE
Figure 48-2100

81J 048 2100

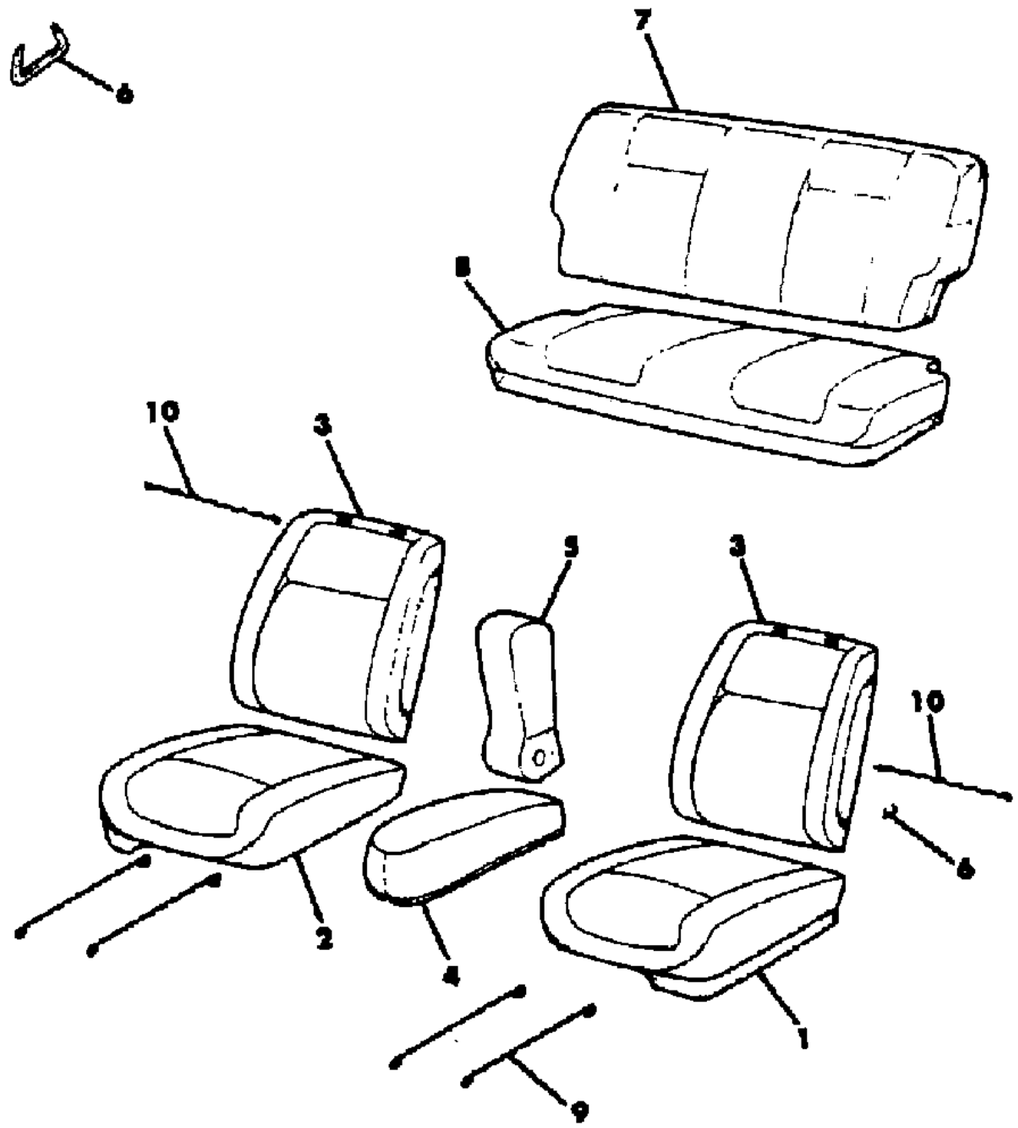

ITEM	PART NUMBER	QTY	BODY	MODEL	DESCRIPTION
1					COVER, Cushion
	J546 5227	1			Coded "1CD", 1981-82
	J576 2854	1			Coded "1CD", 1983
	J546 5243	1			Coded "1DD", 1981-82
	J576 2906	1			Coded "1DD", 1983
	J575 6236	1			Coded "1DE"or"1DK"
	J575 6212	1			Coded "1DG"
	J575 6308	1			Coded "1DJ", 1981-82
	J576 2909	1			Coded "1DJ", 1983
	J546 5228	1			Coded "3CD", 1981
	J576 0602	1			Coded "3CD", 1982
	J546 5244	1			Coded "3DD", 1981
	J576 0616	1			Coded "3DD", 1982
	J575 6237	1			Coded "3DE", 1981
	J576 0618	1			Coded "3DE", 1982
	J575 6213	1			Coded "3DG", 1981
	J576 0617	1			Coded "3DG", 1982
	J575 6238	1			Coded "5DE"or"5DK"
	J575 6214	1			Coded "5DG"
	J575 6263	1			Coded "5DJ", 1981-82
	J576 2910	1			Coded "5DJ", 1983
	J575 6207	1			Coded "6CD", 1981-82
	J576 2856	1			Coded "6CD", 1983
	J575 6209	1			Coded "6DD", 1981-82
	J576 2908	1			Coded "6DD", 1983
	J575 6239	1			Coded "6DE"
	J575 6215	1			Coded "6DG"
2					COVER, Cushion
	J546 5235	1			Coded "1CD"or"1DD", 1981-82
	J576 2927	1			Coded "1CD"or"1DD", 1983
	J575 6244	1			Coded "1DE"or"1DK"
	J576 6220	1			Coded "1DG"
	J575 6310	1			Coded "1DJ", 1981-82
	J576 2930	1			Coded "1DJ", 1983
	J546 5236	1			Coded "3CD"or"3DD", 1981
	J576 0624	1			Coded "3CD"or"3DD", 1982
	J575 6245	1			Coded "3DE", 1981
	J576 0626	1			Coded "3DE", 1982
	J575 6221	1			Coded "3DG", 1981

MODEL CODES

16=Cherokee 2 Dr.(1981-83)	78=Cherokee 4WD-4 Dr.(1984-86)	64=Comanche 2WD-6 Ft. Box(1986)	25=J-10 Truck 7 Ft. Box(1981-84)
17=Cherokee 2 Dr.(1981-83)	85=CJ-5 (1981-83)	66=Comanche 2WD-7 Ft. Box(1986)	26=J10 Truck 8 Ft. Box(1981-86)
73=Cherokee 2WD-2 Dr.(1984-86)	86=CJ-6(1981)	63=Comanche 4WD-6 Ft. Box(1986)	27=J-20 Truck 8 Ft. Box(1981-86)
74=Cherokee 2WD-4 Dr.(1984-86)	87=CJ-7(1981-86)	65=Comanche 4WD-7 Ft. Box(1986)	15=Wagoneer 4 Dr.(1981-83)
18=Cherokee 4 Dr.(1981-83)	88=CJ-8, Scrambler(1981-86)	15=Grand Wagoneer 4 Dr.(1984-86)	75=Wagoneer 4WD-4 Dr.(1984-86)
77=Cherokee 4WD-2 Dr.(1984-86)			

BODY
CJ=CJ-5, CJ-6, CJ-7, CJ-8, Scrambler(1981-86)
MJ=Comanche Pickup(1986)

STYLES
SJ=Wagoneer(1981-83), Grand Wagoneer(1984-86), Cherokee(1981-83), J-10, J-20(1981-86)
XJ=Wagoneer(1984-86), Cherokee(1984-86)

AR = Use as Required - = Non Illustrated Part P.A.R. = Paint as Required

COVERS, UPHOLSTERY WITH FRONT BUCKET SEATS, 2 DOOR SJ CHEROKEE
Figure 48-2100

81J 048 2100

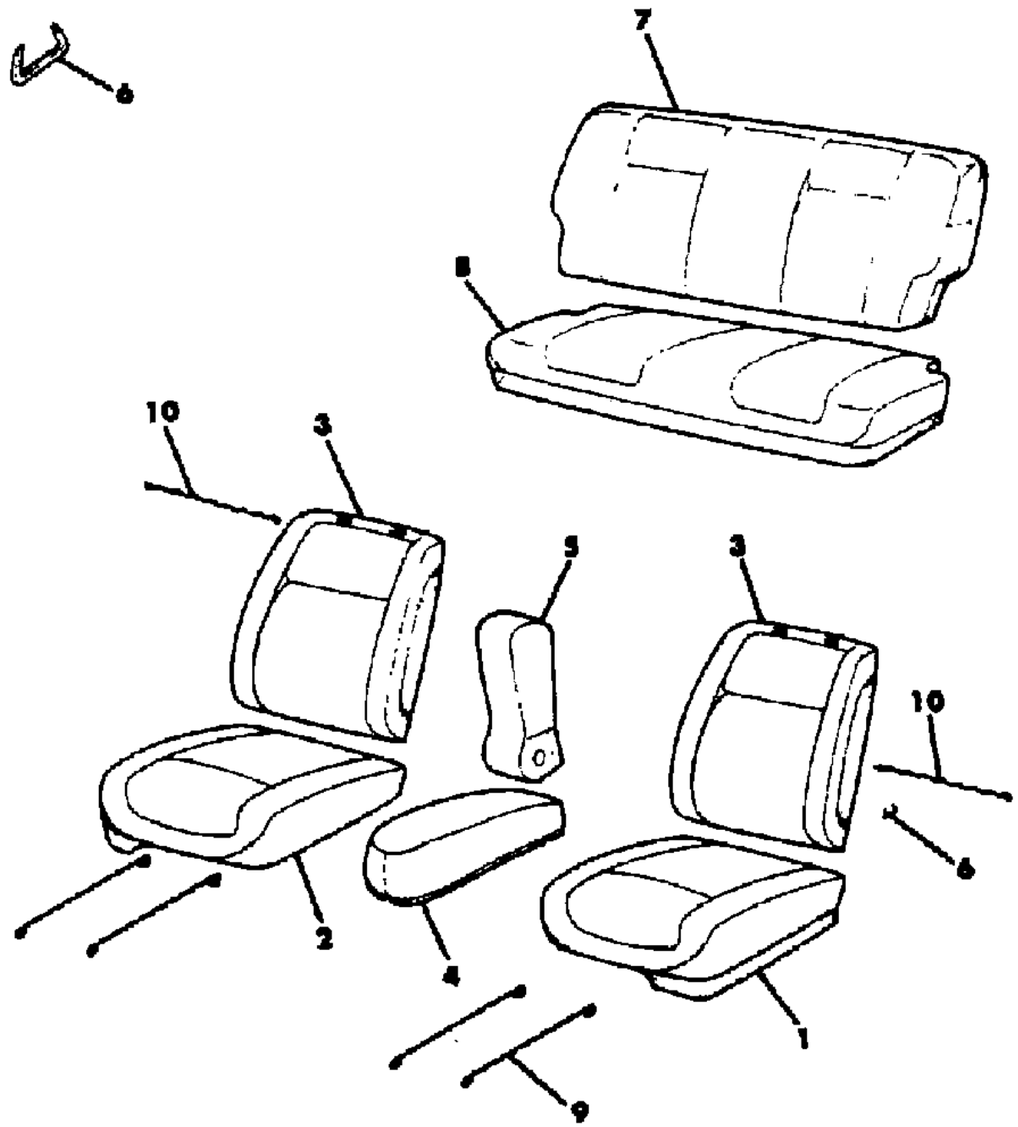

ITEM	PART NUMBER	QTY	BODY	MODEL	DESCRIPTION
	J576 0625	1			Coded "3DG", 1982
	J575 6246	1			Coded "5DE"or"5DK"
	J575 6222	1			Coded "5DG"
	J575 6265	1			Coded "5DJ", 1981-82
	J576 2931	1			Coded "5DJ", 1983
	J575 6211	1			Coded "6CD", 1981-82
	J576 2929	1			Coded "6CD"or"6DD", 1983
	J575 6247	1			Coded "6DE"
	J575 6223	1			Coded "6DG"
3					COVER, Back
	J546 5247	1			Coded "1CD", Right, 1981-82
	J576 2911	1			Coded "1CD", Right, 1983
	J546 5231	1			Coded "1CD", Left, 1981-82
	J576 2865	1			Coded "1CD", Left, 1983
	J546 5247	2			Coded "1DD", 1981-82
	J576 2911	2			Coded "1DD", 1983
	J575 6240	2			Coded "DE"or"1DK"
	J575 6216	2			Coded "1DG"
	J575 6309	2			Coded "1DJ", 1981-82
	J576 2914	2			Coded "1DJ", 1983
	J546 5248	1			Coded "3CD", Right, 1981
	J576 0621	1			Coded "3CD", Right, 1982
	J546 5232	1			Coded "3CD", Left, 1981
	J576 0607	1			Coded "3CD", Left, 1982
	J546 5248	2			Coded "3DD", 1981
	J576 0621	2			Coded "3DD", 1982
	J575 6241	2			Coded "3DE", 1981
	J576 0623	2			Coded "3DE", 1982
	J575 6217	2			Coded "3DG", 1981
	J576 0622	2			Coded "3DG", 1982
	J575 6242	2			Coded "5DE"or"5DK"
	J575 6218	2			Coded "5DG"
	J575 6264	2			Coded "5DJ", 1981-82
	J576 2915	2			Coded "5DJ", 1983
	J575 6210	1			Coded "6CD", Right, 1981-82
	J576 2913	1			Coded "6CD", Right, 1983
	J575 6208	1			Coded "6CD", Left, 1981-82
	J576 2867	1			Coded "6CD", Left, 1983
	J575 6210	2			Coded "6DD", 1981-82

MODEL CODES

16=Cherokee 2 Dr.(1981-83)
17=Cherokee 2 Dr.(1981-83)
73=Cherokee 2WD-2 Dr.(1984-86)
74=Cherokee 2WD-4 Dr.(1984-86)
18=Cherokee 4 Dr.(1981-83)
77=Cherokee 4WD-2 Dr.(1984-86)
78=Cherokee 4WD-4 Dr.(1984-86)
85=CJ-5 (1981-83)
86=CJ-6(1981)
87=CJ-7(1981-86)
88=CJ-8, Scrambler(1981-86)
64=Comanche 2WD-6 Ft. Box(1986)
66=Comanche 2WD-7 Ft. Box(1986)
63=Comanche 4WD-6 Ft. Box(1986)
65=Comanche 4WD-7 Ft. Box(1986)
15=Grand Wagoneer 4 Dr.(1984-86)
25=J-10 Truck 7 Ft. Box(1981-84)
26=J10 Truck 8 Ft. Box(1981-86)
27=J-20 Truck 8 Ft. Box(1981-86)
15=Wagoneer 4 Dr.(1981-83)
75=Wagoneer 4WD-4 Dr.(1984-86)

BODY
CJ=CJ-5, CJ-6, CJ-7, CJ-8, Scrambler(1981-86)
MJ=Comanche Pickup(1986)

STYLES
SJ=Wagoneer(1981-83), Grand Wagoneer(1984-86), Cherokee(1981-83), J-10, J-20(1981-86)
XJ=Wagoneer(1984-86), Cherokee(1984-86)

AR = Use as Required - = Non Illustrated Part P.A.R. = Paint as Required

COVERS, UPHOLSTERY WITH FRONT BUCKET SEATS, 2 DOOR SJ CHEROKEE
Figure 48-2100

81J 048 2100

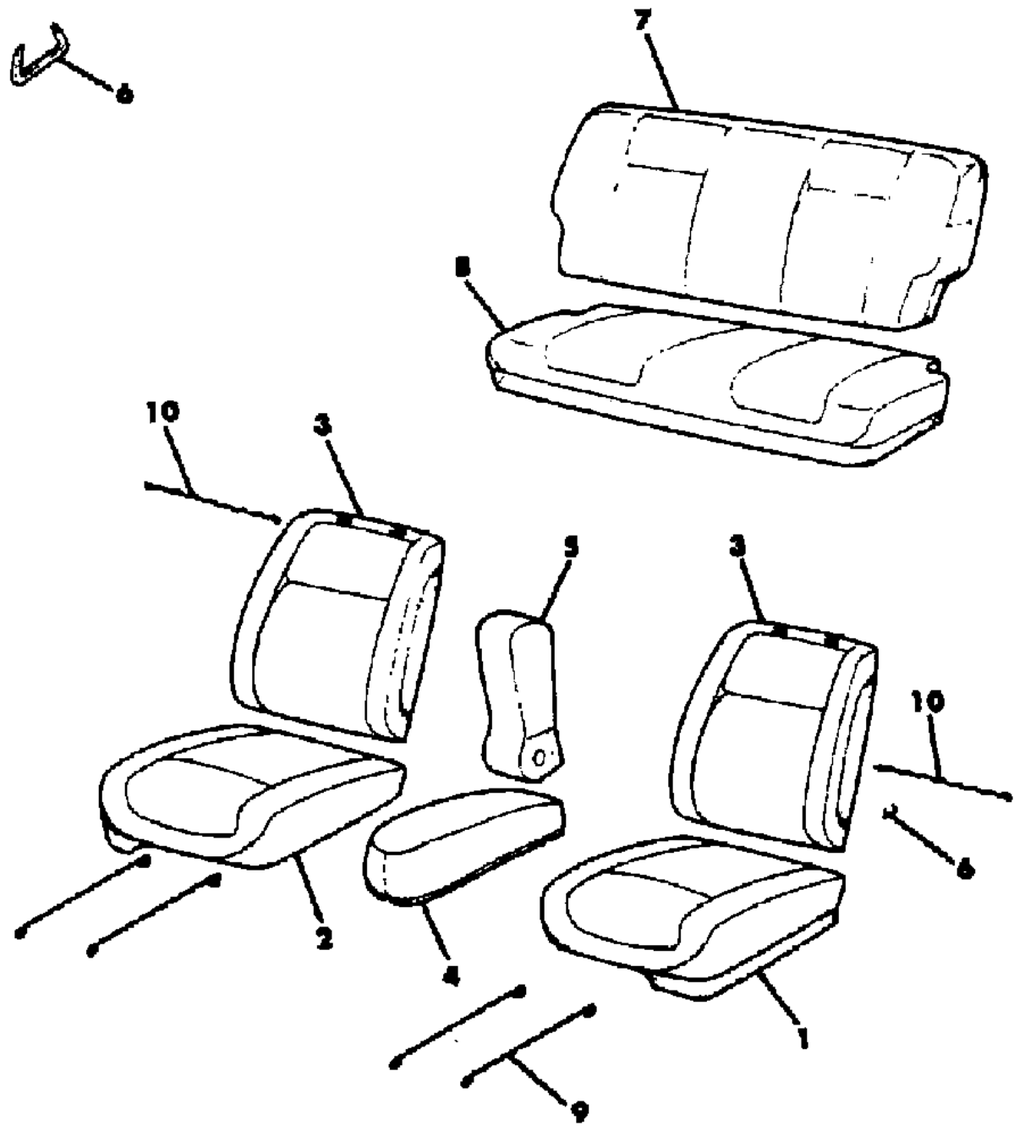

ITEM	PART NUMBER	QTY	BODY	MODEL	DESCRIPTION
	J576 2913	2			Coded "6DD", 1983
	J575 6243	2			Coded "6DE"
	J575 6219	2			Coded "6DG"
4					COVER, Armrest
					Without Sun Valley Vinyl
	J575 5744	1			Beige
	J546 5424	1			Black
	J546 5425	1			Blue, 1981
	J575 5745	1			Nutmeg
					Sun Valley Vinyl
	J575 5748	1			Beige
	J575 5746	1			Black
	J575 5747	1			Blue, 1981
	J576 0128	1			Slate Blue, 1982
	J575 5749	1			Nutmeg
5					COVER, Armrest
					Without Sun Valley Vinyl
	J575 5738	1			Beige
	J546 5428	1			Black
	J546 5429	1			Blue, 1981
	J576 0127	1			Slate Blue, 1982
	J575 5739	1			Nutmeg
					Sun Valley Vinyl
	J575 5742	1			Beige
	J575 5740	1			Black
	J575 5741	1			Blue, 1981
	J576 0129	1			Slate Blue, 1982
	J575 5743	1			Nutmeg
6	J436 3256	AR			RING
7					COVER, Back
	J546 5206	1			Coded "1CD"or"1DD", 1981-82
	J576 2279	1			Coded "1CD"or"1DD", 1983
	J575 6485	1			Coded "1DE"or"1DK"
	J575 6477	1			Coded "1DG"
	J575 6491	1			Coded "1DJ", 1981-82
	J576 2286	1			Coded "1DJ", 1983
	J546 5207	1			Coded "3CD"or"3DD", 1981
	J576 0689	1			Coded "3CD"or"3DD", 1982
	J575 6486	1			Coded "3DE", 1981

MODEL CODES

16=Cherokee 2 Dr.(1981-83)	78=Cherokee 4WD-4 Dr.(1984-86)	64=Comanche 2WD-6 Ft. Box(1986)	25=J-10 Truck 7 Ft. Box(1981-84)
17=Cherokee 2 Dr.(1981-83)	85=CJ-5 (1981-83)	66=Comanche 2WD-7 Ft. Box(1986)	26=J10 Truck 8 Ft. Box(1981-86)
73=Cherokee 2WD-2 Dr.(1984-86)	86=CJ-6(1981)	63=Comanche 4WD-6 Ft. Box(1986)	27=J-20 Truck 8 Ft. Box(1981-86)
74=Cherokee 2WD-4 Dr.(1984-86)	87=CJ-7(1981-86)	65=Comanche 4WD-7 Ft. Box(1986)	15=Wagoneer 4 Dr.(1981-83)
18=Cherokee 4 Dr.(1981-83)	88=CJ-8, Scrambler(1981-86)	15=Grand Wagoneer 4 Dr.(1984-86)	75=Wagoneer 4WD-4 Dr.(1984-86)
77=Cherokee 4WD-2 Dr.(1984-86)			

BODY
CJ=CJ-5, CJ-6, CJ-7, CJ-8, Scrambler(1981-86)
MJ=Comanche Pickup(1986)

STYLES
SJ=Wagoneer(1981-83), Grand Wagoneer(1984-86), Cherokee(1981-83), J-10, J-20(1981-86)
XJ=Wagoneer(1984-86), Cherokee(1984-86)

AR = Use as Required - = Non Illustrated Part P.A.R. = Paint as Required

COVERS, UPHOLSTERY WITH FRONT BUCKET SEATS, 2 DOOR SJ CHEROKEE
Figure 48-2100

81J 048 2100

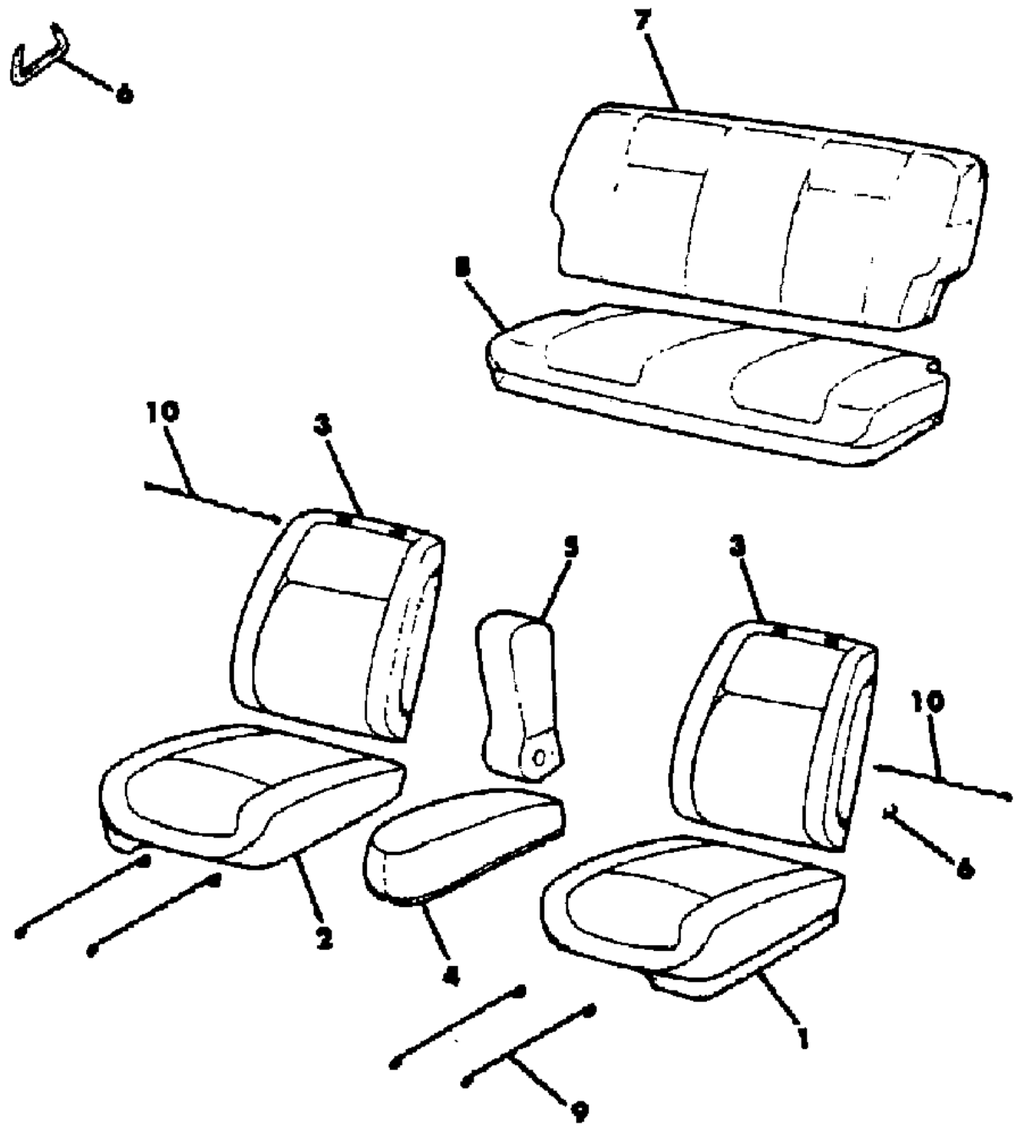

ITEM	PART NUMBER	QTY	BODY	MODEL	DESCRIPTION
	J576 0693	1			Coded "3DE", 1982
	J575 6478	1			Coded "3DG", 1981
	J576 0691	1			Coded "3DG", 1982
	J575 6487	1			Coded "5DE"or"5DK"
	J575 6479	1			Coded "5DG"
	J575 6492	1			Coded "5DJ", 1981-82
	J576 2287	1			Coded "5DJ", 1983
	J575 6472	1			Coded "6CD"or"6DD", 1981-82
	J576 2281	1			Coded "6CD"or"6DD", 1983
	J576 6488	1			Coded "6DE"
	J575 6480	1			Coded "6DG"
8					COVER, Cushion
	J546 5203	1			Coded "1CD"or"1DD", 1981-82
	J576 2266	1			Coded "1CD"or"1DD", 1983
	J575 6481	1			Coded "1DE"or"1DK"
	J575 6473	1			Coded "1DG"
	J575 6489	1			Coded "1DJ", 1981-82
	J576 2273	1			Coded "1DJ", 1983
	J546 5204	1			Coded "3CD"or"3DD", 1981
	J576 0688	1			Coded "3CD"or"3DD, 1982
	J575 6482	1			Coded "3DE", 1981
	J576 0692	1			Coded "3DE", 1982
	J575 6474	1			Coded "3DG", 1981
	J576 0690	1			Coded "3DG", 1982
	J575 6483	1			Coded "5DE"or"5DK"
	J575 6475	1			Coded "5DG"
	J575 6490	1			Coded "5DJ", 1981-82
	J576 2274	1			Coded "5DJ", 1983
	J575 6469	1			Coded "6CD"or"6DD", 1981-82
	J576 2268	1			Coded "6CD"or"6DD", 1983
	J575 6484	1			Coded "6DE"
	J575 6476	1			Coded "6DG"
9	J545 2230	4			WIRE, Cover
10	J362 1468	2			WIRE, Back Cover

MODEL CODES

16=Cherokee 2 Dr.(1981-83)
17=Cherokee 2 Dr.(1981-83)
73=Cherokee 2WD-2 Dr.(1984-86)
74=Cherokee 2WD-4 Dr.(1984-86)
18=Cherokee 4 Dr.(1981-83)
77=Cherokee 4WD-2 Dr.(1984-86)
78=Cherokee 4WD-4 Dr.(1984-86)
85=CJ-5 (1981-83)
86=CJ-6(1981)
87=CJ-7(1981-86)
88=CJ-8, Scrambler(1981-86)
64=Comanche 2WD-6 Ft. Box(1986)
66=Comanche 2WD-7 Ft. Box(1986)
63=Comanche 4WD-6 Ft. Box(1986)
65=Comanche 4WD-7 Ft. Box(1986)
15=Grand Wagoneer 4 Dr.(1984-86)
25=J-10 Truck 7 Ft. Box(1981-84)
26=J10 Truck 8 Ft. Box(1981-86)
27=J-20 Truck 8 Ft. Box(1981-86)
15=Wagoneer 4 Dr.(1981-83)
75=Wagoneer 4WD-4 Dr.(1984-86)

BODY
CJ=CJ-5, CJ-6, CJ-7, CJ-8, Scrambler(1981-86)
MJ=Comanche Pickup(1986)

STYLES
SJ=Wagoneer(1981-83), Grand Wagoneer(1984-86), Cherokee(1981-83), J-10, J-20(1981-86)
XJ=Wagoneer(1984-86), Cherokee(1984-86)

AR = Use as Required - = Non Illustrated Part P.A.R. = Paint as Required

« RETURN TO GROUP INDEX

FRAME AND PAD FRONT BUCKET SEAT, FIXED LOW BACK SJ CHEROKEE, SJ WAGONEER
Figure 48-2200

81J 048 2200

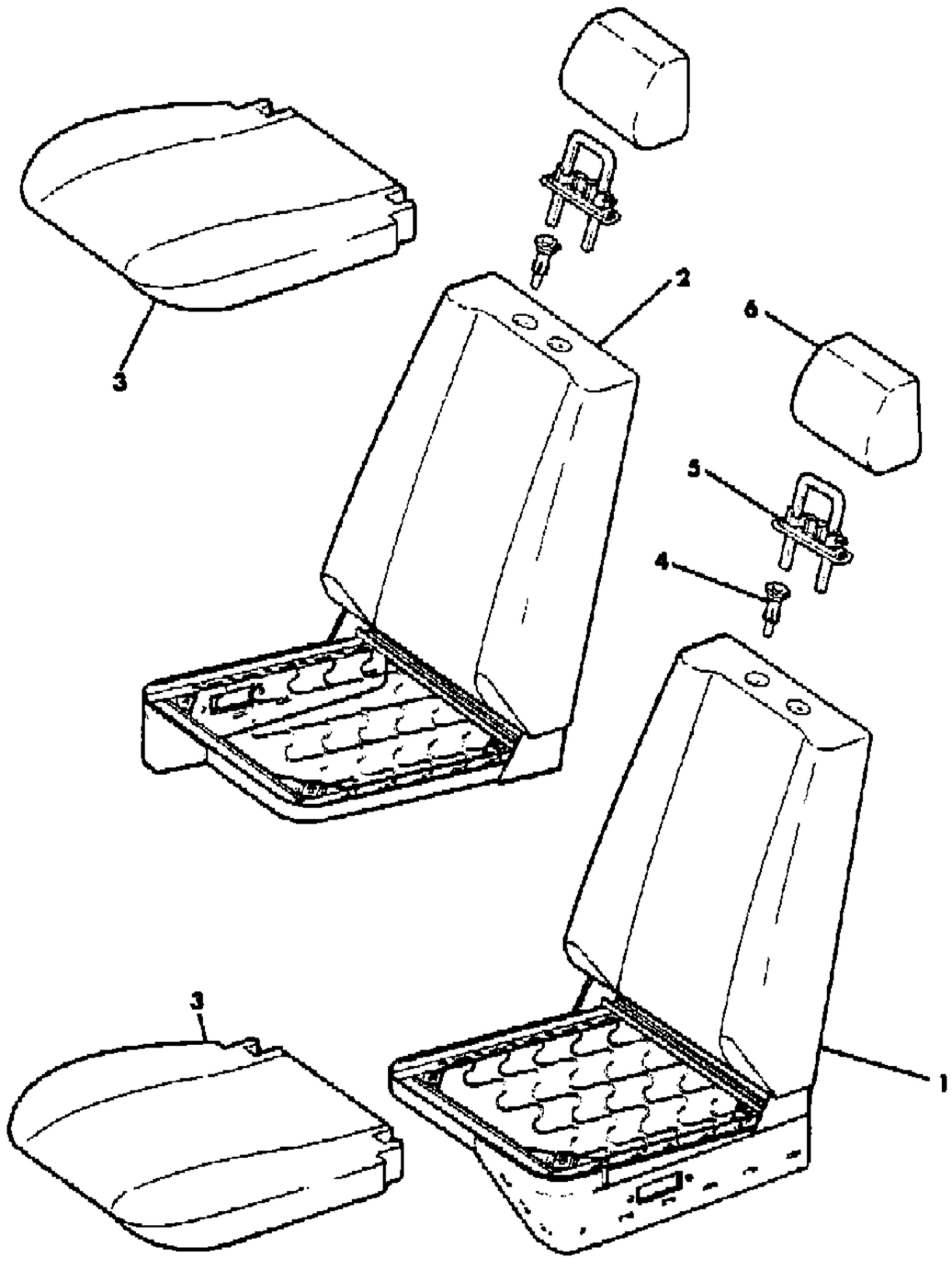

ITEM	PART NUMBER	QTY	BODY	MODEL	DESCRIPTION
1					FRAME, Seat
	J545 4795	1			1981-84
	J576 6599	1			1985-86
2					FRAME, Seat
	J545 4794	1			1981-84
	J576 6598	1			1985-86
3	J545 8622	2			PAD, Cushion
4	T134 9642	4			CYLINDER, Headrest
5	3500 3669	2			POST, Headrest ***
6	3500 1690	2			PAD, Headrest

MODEL CODES

16=Cherokee 2 Dr.(1981-83)
17=Cherokee 2 Dr.(1981-83)
73=Cherokee 2WD-2 Dr.(1984-86)
74=Cherokee 2WD-4 Dr.(1984-86)
18=Cherokee 4 Dr.(1981-83)
77=Cherokee 4WD-2 Dr.(1984-86)
78=Cherokee 4WD-4 Dr.(1984-86)
85=CJ-5 (1981-83)
86=CJ-6(1981)
87=CJ-7(1981-86)
88=CJ-8, Scrambler(1981-86)
64=Comanche 2WD-6 Ft. Box(1986)
66=Comanche 2WD-7 Ft. Box(1986)
63=Comanche 4WD-6 Ft. Box(1986)
65=Comanche 4WD-7 Ft. Box(1986)
15=Grand Wagoneer 4 Dr.(1984-86)
25=J-10 Truck 7 Ft. Box(1981-84)
26=J10 Truck 8 Ft. Box(1981-86)
27=J-20 Truck 8 Ft. Box(1981-86)
15=Wagoneer 4 Dr.(1981-83)
75=Wagoneer 4WD-4 Dr.(1984-86)

BODY
CJ=CJ-5, CJ-6, CJ-7, CJ-8, Scrambler(1981-86)
MJ=Comanche Pickup(1986)

STYLES
SJ=Wagoneer(1981-83), Grand Wagoneer(1984-86), Cherokee(1981-83), J-10, J-20(1981-86)
XJ=Wagoneer(1984-86), Cherokee(1984-86)

AR = Use as Required - = Non Illustrated Part P.A.R. = Paint as Required

« RETURN TO GROUP INDEX

COVERS, UPHOLSTERY WITH FRONT BUCKET SEATS SJ CHEROKEE
Figure 48-2300

81J 048 2300

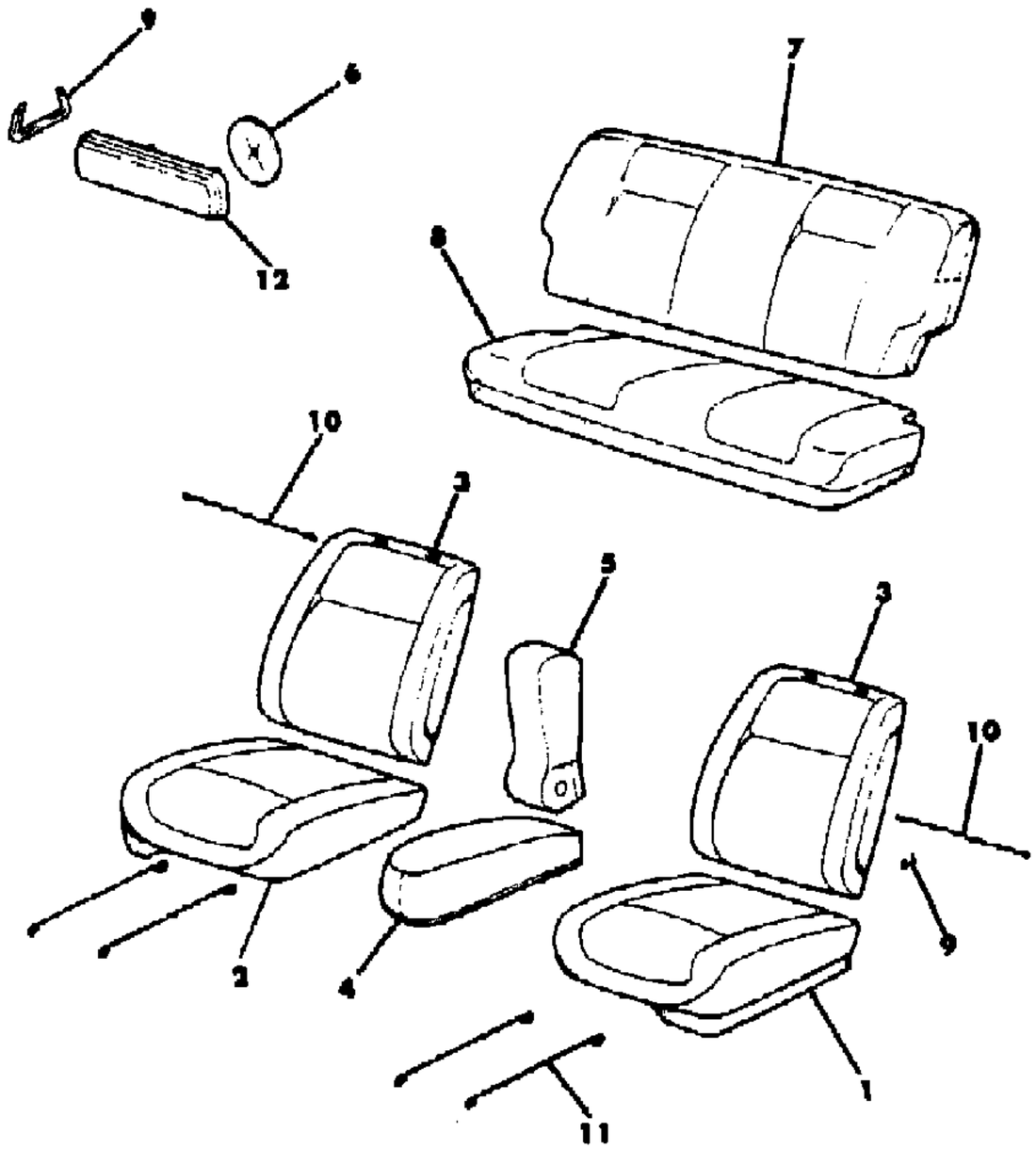

ITEM	PART NUMBER	QTY	BODY	MODEL	DESCRIPTION
1					COVER, Cushion
	J575 6248	1			Coded "1BE"or"1BK"
	J575 6266	1			Coded "1BF", 1981-82
	J576 2850	1			Coded "1BF", 1983
	J575 6224	1			Coded "1BG"
	J546 5227	1			Coded "1CD", 1981-82
	J576 2854	1			Coded "1CD", 1983
	J546 5243	1			Coded "1DD", 1981-82
	J576 2906	1			Coded "1DD", 1983
	J575 6308	1			Coded "1DJ", 1981-82
	J576 2909	1			Coded "1DJ", 1983
	J575 6236	1			Coded "1DK"
	J575 6249	1			Coded "3BE", 1981
	J576 0604	1			Coded "3BE", 1982
	J575 6267	1			Coded "3BF", 1981
	J576 0601	1			Coded "3BF", 1982
	J575 6225	1			Coded "3BG", 1981
	J576 0603	1			Coded "3BG", 1982
	J546 5228	1			Coded "3CD", 1981
	J576 0602	1			Coded "3CD", 1982
	J546 5244	1			Coded "3DD", 1981
	J576 0616	1			Coded "3DD", 1982
	J575 6250	1			Coded "5BE"or"5BK"
	J575 6268	1			Coded "5BF", 1981-82
	J576 2852	1			Coded "5BF", 1983
	J575 6226	1			Coded "5BG"
	J575 6263	1			Coded "5DJ", 1981-82
	J576 2910	1			Coded "5DJ", 1983
	J575 6238	1			Coded "5DK"
	J575 6251	1			Coded "6BE"
	J575 6269	1			Coded "6BF", 1981-82
	J576 2853	1			Coded "6BF", 1983
	J575 6227	1			Coded "6BG"
	J575 6207	1			Coded "6CD", 1981-82
	J576 2856	1			Coded "6CD", 1983
	J575 6209	1			Coded "6DD", 1981-82
	J576 2908	1			Coded "6DD", 1983
2					COVER, Cushion
	J575 6256	1			Coded "1BE"or"1BK"

MODEL CODES

16=Cherokee 2 Dr.(1981-83)	78=Cherokee 4WD-4 Dr.(1984-86)	64=Comanche 2WD-6 Ft. Box(1986)	25=J-10 Truck 7 Ft. Box(1981-84)
17=Cherokee 2 Dr.(1981-83)	85=CJ-5 (1981-83)	66=Comanche 2WD-7 Ft. Box(1986)	26=J10 Truck 8 Ft. Box(1981-86)
73=Cherokee 2WD-2 Dr.(1984-86)	86=CJ-6(1981)	63=Comanche 4WD-6 Ft. Box(1986)	27=J-20 Truck 8 Ft. Box(1981-86)
74=Cherokee 2WD-4 Dr.(1984-86)	87=CJ-7(1981-86)	65=Comanche 4WD-7 Ft. Box(1986)	15=Wagoneer 4 Dr.(1981-83)
18=Cherokee 4 Dr.(1981-83)	88=CJ-8, Scrambler(1981-86)	15=Grand Wagoneer 4 Dr.(1984-86)	75=Wagoneer 4WD-4 Dr.(1984-86)
77=Cherokee 4WD-2 Dr.(1984-86)			

BODY
CJ=CJ-5, CJ-6, CJ-7, CJ-8, Scrambler(1981-86)
MJ=Comanche Pickup(1986)

STYLES
SJ=Wagoneer(1981-83), Grand Wagoneer(1984-86), Cherokee(1981-83), J-10, J-20(1981-86)
XJ=Wagoneer(1984-86), Cherokee(1984-86)

AR = Use as Required - = Non Illustrated Part P.A.R. = Paint as Required

« RETURN TO GROUP INDEX »

COVERS, UPHOLSTERY WITH FRONT BUCKET SEATS SJ CHEROKEE
Figure 48-2300

81J 048 2300

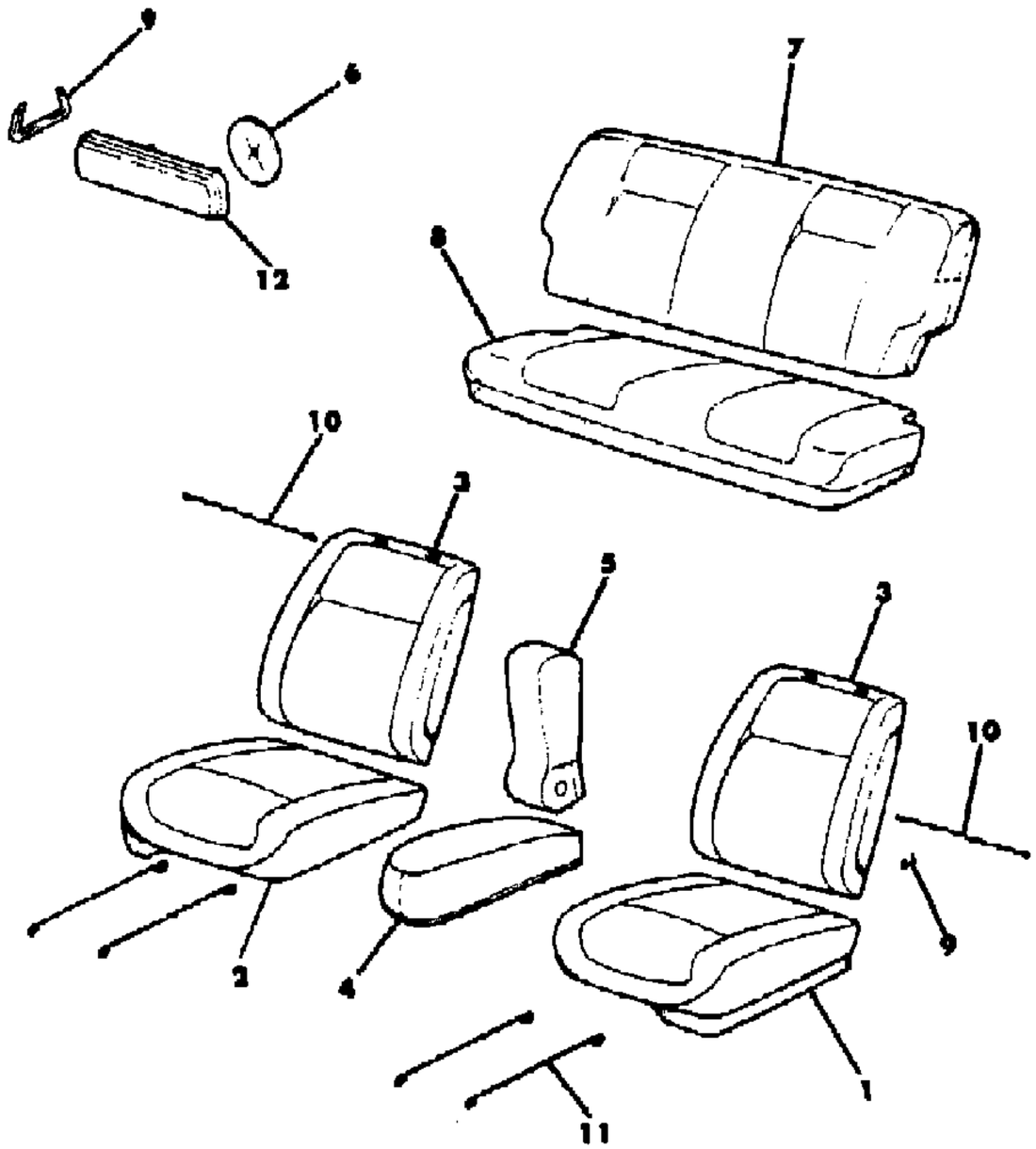

ITEM	PART NUMBER	QTY	BODY	MODEL	DESCRIPTION
	J575 6274	1			Coded "1BF", 1981-82
	J576 2888	1			Coded "1BF", 1983
	J575 6232	1			Coded "1BG"
	J576 5235	1			Coded "1CD"or"1DD", 1981-82
	J576 2927	1			Coded "1CD"or"1DD", 1983
	J575 6310	1			Coded "1DJ", 1981-82
	J576 2930	1			Coded "1DJ", 1983
	J575 6244	1			Coded "1DK"
	J575 6257	1			Coded "3BE", 1981
	J576 0613	1			Coded "3BE", 1982
	J575 6275	1			Coded "3BF", 1981
	J576 0611	1			Coded "3BF", 1982
	J575 6233	1			Coded "3BG", 1981
	J576 0612	1			Coded "3BG", 1982
	J546 5236	1			Coded "3CD"or"3DD", 1981
	J576 0624	1			Coded "3CD"or"3DD", 1982
	J575 6258	1			Coded "5BE"or"5BK"
	J575 6276	1			Coded "5BF", 1981-82
	J576 2890	1			Coded "5BF", 1983
	J575 6234	1			Coded "5BG"
	J575 6265	1			Coded "5DJ", 1981-82
	J576 2931	1			Coded "5DJ", 1983
	J575 6246	1			Coded "5DK"
	J575 6259	1			Coded "6BE"
	J575 6277	1			Coded "6BF", 1981-82
	J576 2891	1			Coded "6BF", 1983
	J575 6235	1			Coded "6BG"
	J575 6211	1			Coded "6CD"or"6DD", 1981-82
	J576 2929	1			Coded "6CD"or"6DD", 1983
3					COVER, Back
	J575 6252	2			Coded "1BE"or"1BK"
	J575 6270	2			Coded "1BF", 1981-82
	J576 2861	2			Coded "1BF", 1983
	J575 6228	2			Coded "1BG"
	J546 5247	1			Coded "1CD", Right, 1981-82
	J576 2911	1			Coded "1CD", Right, 1983
	J546 5231	1			Coded "1CD", Left, 1981-82
	J576 2865	1			Coded "1CD", Left, 1983
	J546 5247	2			Coded "1DD", 1981-82

MODEL CODES

16=Cherokee 2 Dr.(1981-83)
17=Cherokee 2 Dr.(1981-83)
73=Cherokee 2WD-2 Dr.(1984-86)
74=Cherokee 2WD-4 Dr.(1984-86)
18=Cherokee 4 Dr.(1981-83)
77=Cherokee 4WD-2 Dr.(1984-86)
78=Cherokee 4WD-4 Dr.(1984-86)
85=CJ-5 (1981-83)
86=CJ-6(1981)
87=CJ-7(1981-86)
88=CJ-8, Scrambler(1981-86)
64=Comanche 2WD-6 Ft. Box(1986)
66=Comanche 2WD-7 Ft. Box(1986)
63=Comanche 4WD-6 Ft. Box(1986)
65=Comanche 4WD-7 Ft. Box(1986)
15=Grand Wagoneer 4 Dr.(1984-86)
25=J-10 Truck 7 Ft. Box(1981-84)
26=J10 Truck 8 Ft. Box(1981-86)
27=J-20 Truck 8 Ft. Box(1981-86)
15=Wagoneer 4 Dr.(1981-83)
75=Wagoneer 4WD-4 Dr.(1984-86)

BODY
CJ=CJ-5, CJ-6, CJ-7, CJ-8, Scrambler(1981-86)
MJ=Comanche Pickup(1986)

STYLES
SJ=Wagoneer(1981-83), Grand Wagoneer(1984-86), Cherokee(1981-83), J-10, J-20(1981-86)
XJ=Wagoneer(1984-86), Cherokee(1984-86)

AR = Use as Required - = Non Illustrated Part P.A.R. = Paint as Required

COVERS, UPHOLSTERY WITH FRONT BUCKET SEATS SJ CHEROKEE
Figure 48-2300

81J 048 2300

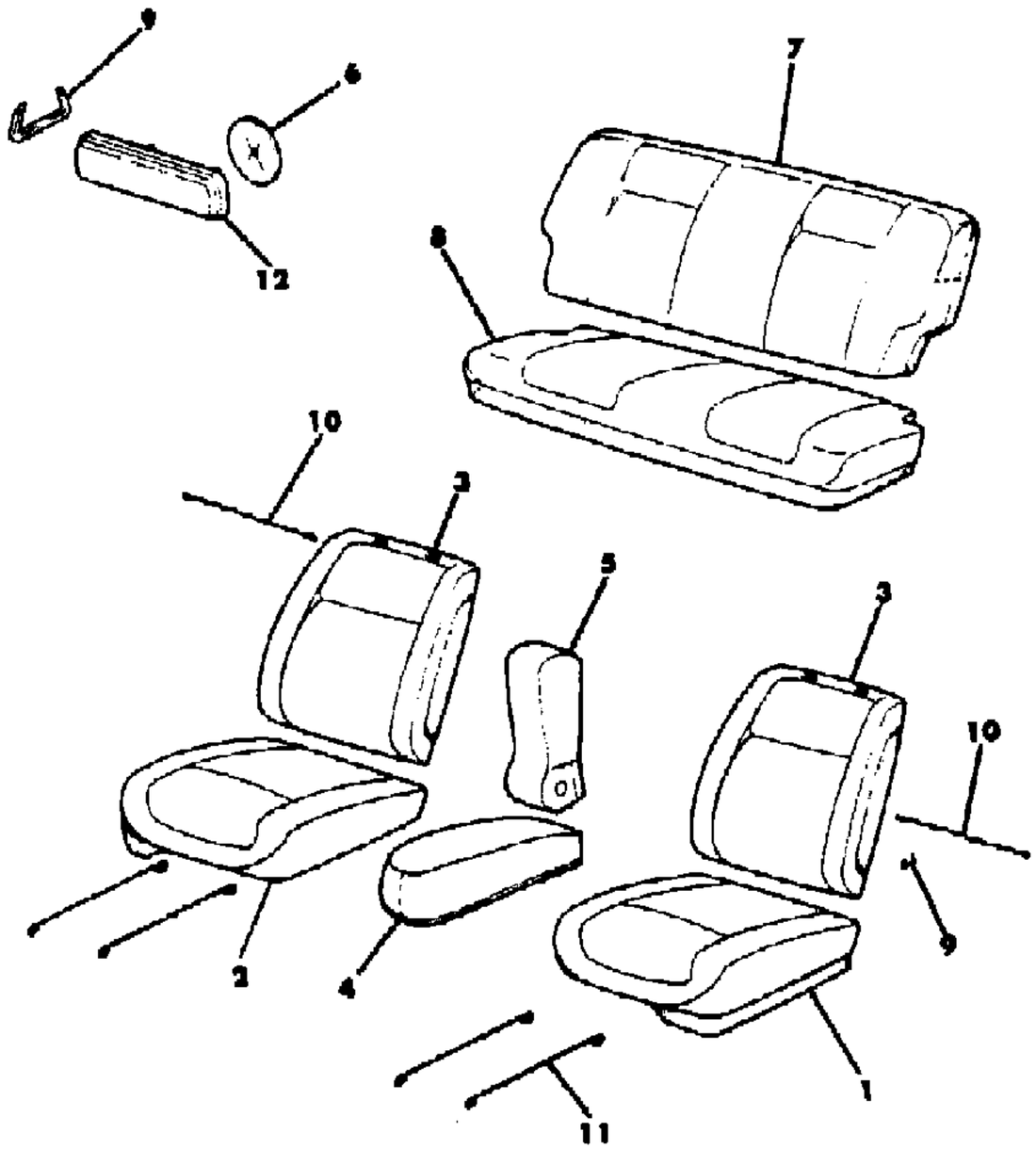

ITEM	PART NUMBER	QTY	BODY	MODEL	DESCRIPTION
	J576 2911	2			Coded "1DD", 1983
	J575 6309	2			Coded "1DJ", 1981-82
	J576 2914	2			Coded "1DJ", 1983
	J575 6240	2			Coded "1DK"
	J575 6253	2			Coded "3BE", 1981
	J576 0609	2			Coded "3BE", 1982
	J575 6271	2			Coded "3BF", 1981
	J576 0606	2			Coded "3BF", 1982
	J575 6229	2			Coded "3BG", 1981
	J576 0608	2			Coded "3BG", 1982
	J546 5248	1			Coded "3CD", Right, 1981
	J576 0621	1			Coded "3CD", Right, 1982
	J546 5232	1			Coded "3CD", Left, 1981
	J576 0607	1			Coded "3CD", Left, 1982
	J576 5248	2			Coded "3DD", 1981
	J576 0621	2			Coded "3DD", 1982
	J575 6254	2			Coded "5BE"or"5BK"
	J575 6272	2			Coded "5BF", 1981-82
	J576 2863	2			Coded "5BF", 1983
	J575 6230	2			Coded "5BG"
	J575 6264	2			Coded "5DJ", 1981-82
	J576 2915	2			Coded "5DJ", 1983
	J575 6242	2			Coded "5DK"
	J575 6255	2			Coded "6BE"
	J575 6273	2			Coded "6BF", 1981-82
	J576 2864	2			Coded "6BF",1983
	J575 6231	2			Coded "6BG"
3					COVER, Back
	J575 6210	1			Coded "6CD", Right, 1981-82
	J576 2913	1			Coded "6CD", Right, 1983
	J575 6208	1			Coded "6CD", Left, 1981-82
	J576 2867	1			Coded "6CD", Left, 1983
	J576 6210	2			Coded "6DD", 1981-82
	J576 2913	2			Coded "6DD", 1983
4					COVER, Armrest
					Without Sun Valley Vinyl
	J575 5744	1			Beige
	J546 5424	1			Black
	J546 5425	1			Blue, 1981

MODEL CODES

16=Cherokee 2 Dr.(1981-83)
17=Cherokee 2 Dr.(1981-83)
73=Cherokee 2WD-2 Dr.(1984-86)
74=Cherokee 2WD-4 Dr.(1984-86)
18=Cherokee 4 Dr.(1981-83)
77=Cherokee 4WD-2 Dr.(1984-86)
78=Cherokee 4WD-4 Dr.(1984-86)
85=CJ-5 (1981-83)
86=CJ-6(1981)
87=CJ-7(1981-86)
88=CJ-8, Scrambler(1981-86)
64=Comanche 2WD-6 Ft. Box(1986)
66=Comanche 2WD-7 Ft. Box(1986)
63=Comanche 4WD-6 Ft. Box(1986)
65=Comanche 4WD-7 Ft. Box(1986)
15=Grand Wagoneer 4 Dr.(1984-86)
25=J-10 Truck 7 Ft. Box(1981-84)
26=J10 Truck 8 Ft. Box(1981-86)
27=J-20 Truck 8 Ft. Box(1981-86)
15=Wagoneer 4 Dr.(1981-83)
75=Wagoneer 4WD-4 Dr.(1984-86)

BODY
CJ=CJ-5, CJ-6, CJ-7, CJ-8, Scrambler(1981-86)
MJ=Comanche Pickup(1986)

STYLES
SJ=Wagoneer(1981-83), Grand Wagoneer(1984-86), Cherokee(1981-83), J-10, J-20(1981-86)
XJ=Wagoneer(1984-86), Cherokee(1984-86)

AR = Use as Required - = Non Illustrated Part P.A.R. = Paint as Required

COVERS, UPHOLSTERY WITH FRONT BUCKET SEATS SJ CHEROKEE
Figure 48-2300

81J 048 2300

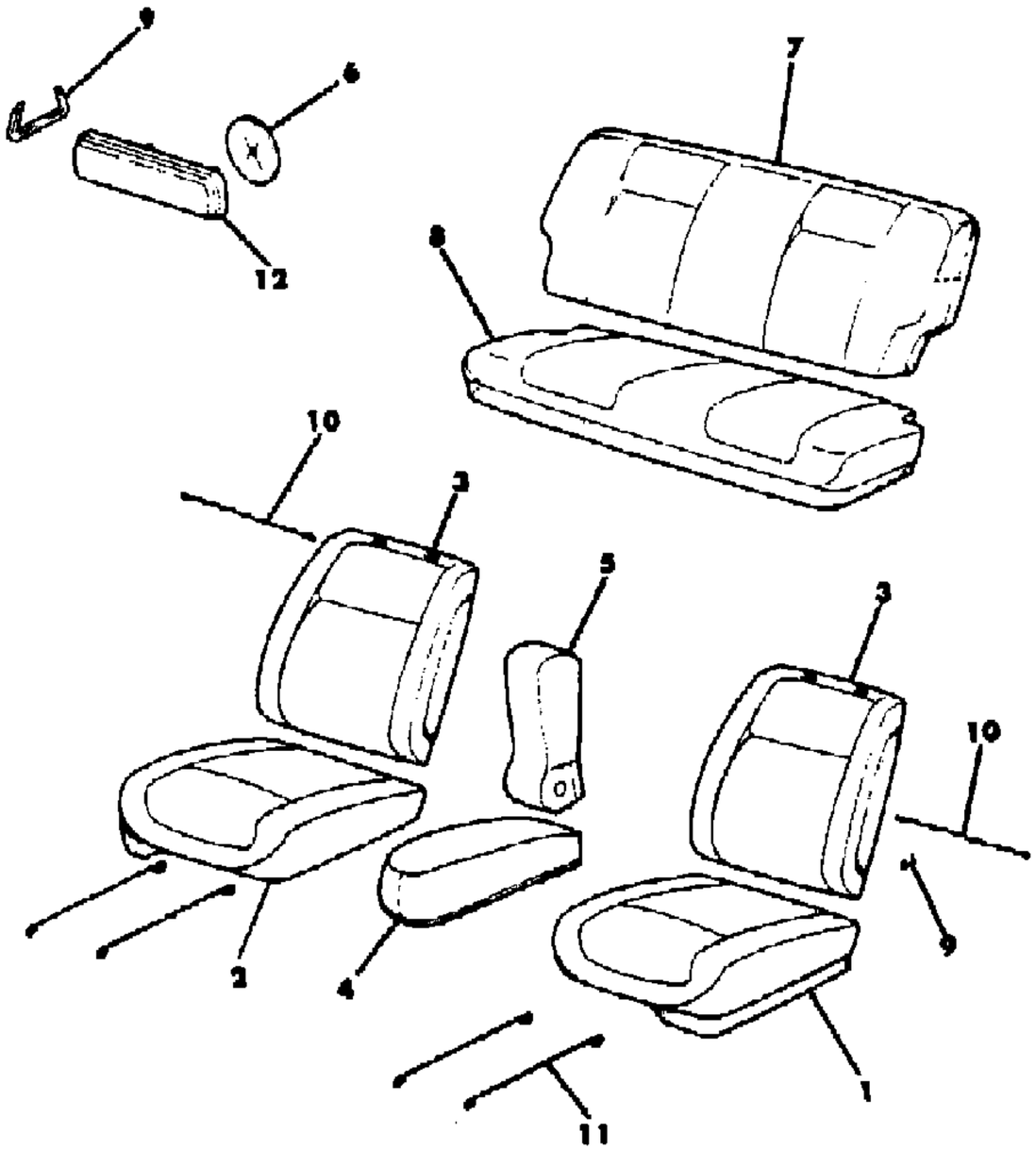

ITEM	PART NUMBER	QTY	BODY	MODEL	DESCRIPTION
	J576 0126	1			Slate Blue, 1982
	J575 5745	1			Nutmeg
					With Sun Valley Vinyl, Coded "BG"or"DG"
	J575 5748	1			Beige
	J575 5746	1			Black
	J575 5747	1			Blue, 1981
	J576 0128	1			Slate Blue, 1982
	J575 5749	1			Nutmeg
5					COVER, Armrest
					Without Sun Valley Vinyl
	J575 5738	1			Beige
	J546 5428	1			Black
	J546 5429	1			Blue, 1981
	J576 0127	1			Slate Blue, 1982
	J575 5739	1			Nutmeg
					Sun Valley Vinyl, Coded "BG"or"DG"
	J575 5742	1			Beige
	J575 5740	1			Black
	J575 5741	1			Blue, 1981
	J576 0129	1			Slate Blue, 1982
	J575 5743	1			Nutmeg
6	J400 5214	AR			RETAINER
7					COVER, Back
	J575 6485	1			Coded "1BE"or"1BK"or"1DK"
	J565 6507	1			Coded "1BF", 1981-82
	J576 2282	1			Coded "1BF"
	J575 6477	1			Coded "1BG"
	J546 5206	1			Coded "1CD"or"1DD", 1981-82
	J576 2279	1			Coded "1CD"or"1DD", 1983
	J575 6491	1			Coded "1DJ", 1981-82
	J576 2286	1			Coded "1DJ", 1983
	J575 6486	1			Coded "3BE", 1981
	J576 0693	1			Coded "3BE", 1982
	J575 6508	1			Coded "3BF", 1981
	J576 0697	1			Coded "3BF", 1982
	J575 6478	1			Coded "3BG", 1981
	J576 0691	1			Coded "3BG", 1982
	J546 5207	1			Coded "3CD"or"3DD", 1981
	J576 0689	1			Coded "3CD"or"3DD", 1982

MODEL CODES

16=Cherokee 2 Dr.(1981-83)
17=Cherokee 2 Dr.(1981-83)
73=Cherokee 2WD-2 Dr.(1984-86)
74=Cherokee 2WD-4 Dr.(1984-86)
18=Cherokee 4 Dr.(1981-83)
77=Cherokee 4WD-2 Dr.(1984-86)
78=Cherokee 4WD-4 Dr.(1984-86)
85=CJ-5 (1981-83)
86=CJ-6(1981)
87=CJ-7(1981-86)
88=CJ-8, Scrambler(1981-86)
64=Comanche 2WD-6 Ft. Box(1986)
66=Comanche 2WD-7 Ft. Box(1986)
63=Comanche 4WD-6 Ft. Box(1986)
65=Comanche 4WD-7 Ft. Box(1986)
15=Grand Wagoneer 4 Dr.(1984-86)
25=J-10 Truck 7 Ft. Box(1981-84)
26=J10 Truck 8 Ft. Box(1981-86)
27=J-20 Truck 8 Ft. Box(1981-86)
15=Wagoneer 4 Dr.(1981-83)
75=Wagoneer 4WD-4 Dr.(1984-86)

BODY
CJ=CJ-5, CJ-6, CJ-7, CJ-8, Scrambler(1981-86)
MJ=Comanche Pickup(1986)

STYLES
SJ=Wagoneer(1981-83), Grand Wagoneer(1984-86), Cherokee(1981-83), J-10, J-20(1981-86)
XJ=Wagoneer(1984-86), Cherokee(1984-86)

AR = Use as Required - = Non Illustrated Part P.A.R. = Paint as Required

COVERS, UPHOLSTERY WITH FRONT BUCKET SEATS SJ CHEROKEE
Figure 48-2300

81J 048 2300

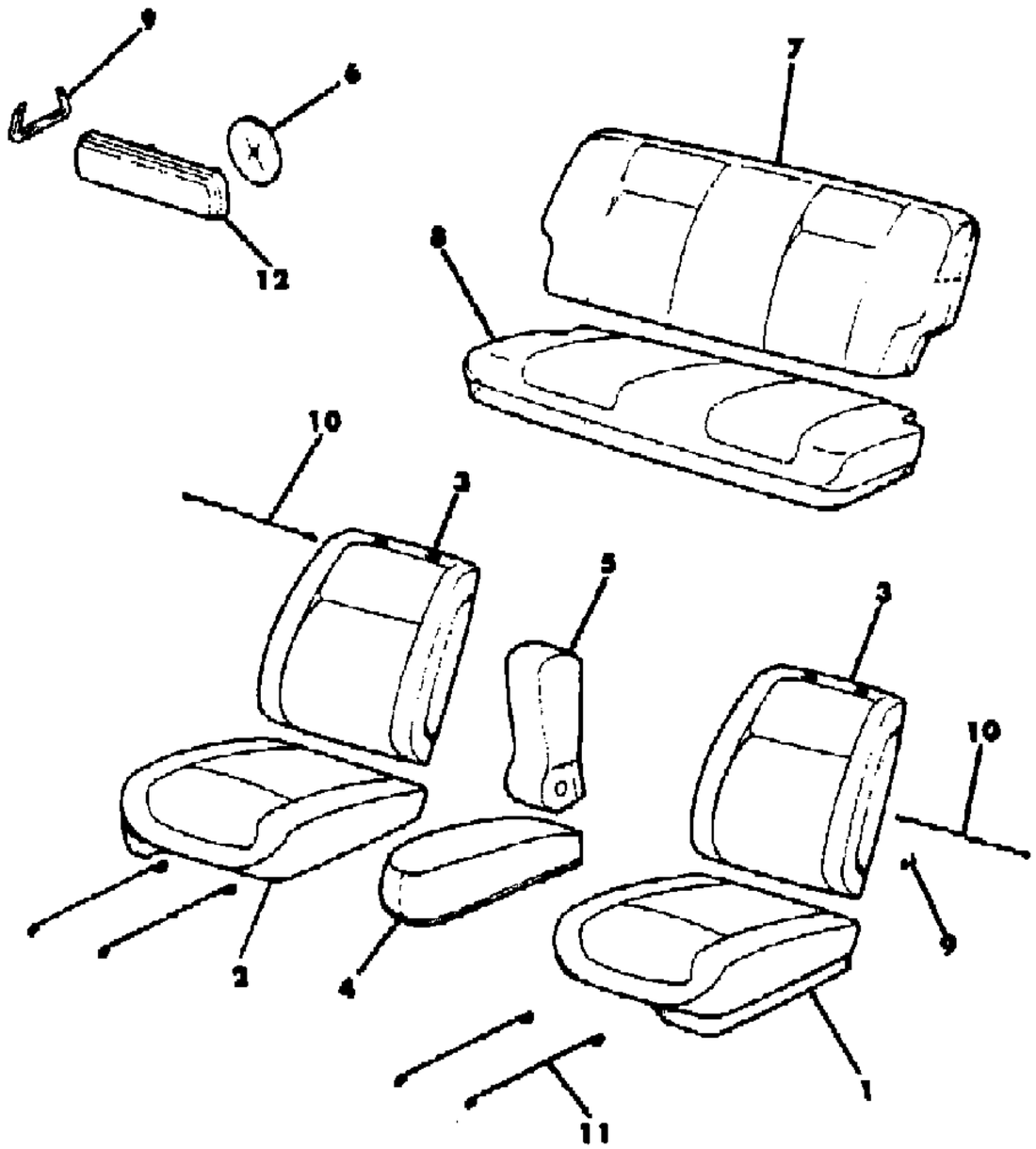

ITEM	PART NUMBER	QTY	BODY	MODEL	DESCRIPTION
	J575 6487	1			Coded "5BE"or"5BK"or"5DK"
	J575 6509	1			Coded "5BF", 1981-82
	J576 2284	1			Coded "5BF", 1983
	J575 6479	1			Coded "5BG"
	J575 6492	1			Coded "5DJ", 1981-82
	J576 2287	1			Coded "5DJ", 1983
	J575 6488	1			Coded "6BE"
	J575 6510	1			Coded "6BF", 1981-82
	J576 2285	1			Coded "6BF", 1983
	J575 6480	1			Coded "6BG"
	J575 6472	1			Coded "6CD"or"6DD", 1981-82
	J576 2281	1			Coded "6CD"or"6DD", 1983
8					COVER, Cushion
	J575 6481	1			Coded ""1BE"or"1BK"or"1DK"
	J575 6503	1			Coded""1BF", 1981-82
	J576 2269	1			Coded "1BF", 1983
	J575 6473	1			Coded "1BG"
	J546 5203	1			Coded "1CD"or"1DD", 1981-82
	J576 2266	1			Coded "1CD"or"1DD", 1983
	J575 6489	1			Coded "1DJ", 1981-82
	J576 2273	1			Coded "1DJ", 1983
	J575 6482	1			Coded "3BE", 1981
	J576 0692	1			Coded "3BE", 1982
	J575 6504	1			Coded "3BF", 1981
	J576 0696	1			Coded "3BF", 1982
	J575 6474	1			Coded "3BG", 1981
	J576 0690	1			Coded "3BG", 1982
	J546 5204	1			Coded "3CD"or"3DD", 1981
	J576 0688	1			Coded "3CD"or"3DD", 1982
	J575 6483	1			Coded "5BE"or"5BK"or"5DK"
	J575 6505	1			Coded "5BF", 1981-82
	J576 2271	1			Coded "5BF", 1983
	J575 6475	1			Coded "5BG"
	J575 6490	1			Coded "5DJ", 1981-82
	J576 2274	1			Coded "5DJ", 1983
	J575 6484	1			Coded "6BE"
	J575 6506	1			Coded "6BF", 1981-82
	J576 2272	1			Coded "6BF", 1983
	J575 6476	1			Coded "6BG"

MODEL CODES

16=Cherokee 2 Dr.(1981-83)
17=Cherokee 2 Dr.(1981-83)
73=Cherokee 2WD-2 Dr.(1984-86)
74=Cherokee 2WD-4 Dr.(1984-86)
18=Cherokee 4 Dr.(1981-83)
77=Cherokee 4WD-2 Dr.(1984-86)
78=Cherokee 4WD-4 Dr.(1984-86)
85=CJ-5 (1981-83)
86=CJ-6(1981)
87=CJ-7(1981-86)
88=CJ-8, Scrambler(1981-86)
64=Comanche 2WD-6 Ft. Box(1986)
66=Comanche 2WD-7 Ft. Box(1986)
63=Comanche 4WD-6 Ft. Box(1986)
65=Comanche 4WD-7 Ft. Box(1986)
15=Grand Wagoneer 4 Dr.(1984-86)
25=J-10 Truck 7 Ft. Box(1981-84)
26=J10 Truck 8 Ft. Box(1981-86)
27=J-20 Truck 8 Ft. Box(1981-86)
15=Wagoneer 4 Dr.(1981-83)
75=Wagoneer 4WD-4 Dr.(1984-86)

BODY
CJ=CJ-5, CJ-6, CJ-7, CJ-8, Scrambler(1981-86)
MJ=Comanche Pickup(1986)

STYLES
SJ=Wagoneer(1981-83), Grand Wagoneer(1984-86), Cherokee(1981-83), J-10, J-20(1981-86)
XJ=Wagoneer(1984-86), Cherokee(1984-86)

AR = Use as Required - = Non Illustrated Part P.A.R. = Paint as Required

COVERS, UPHOLSTERY WITH FRONT BUCKET SEATS SJ CHEROKEE
Figure 48-2300

81J 048 2300

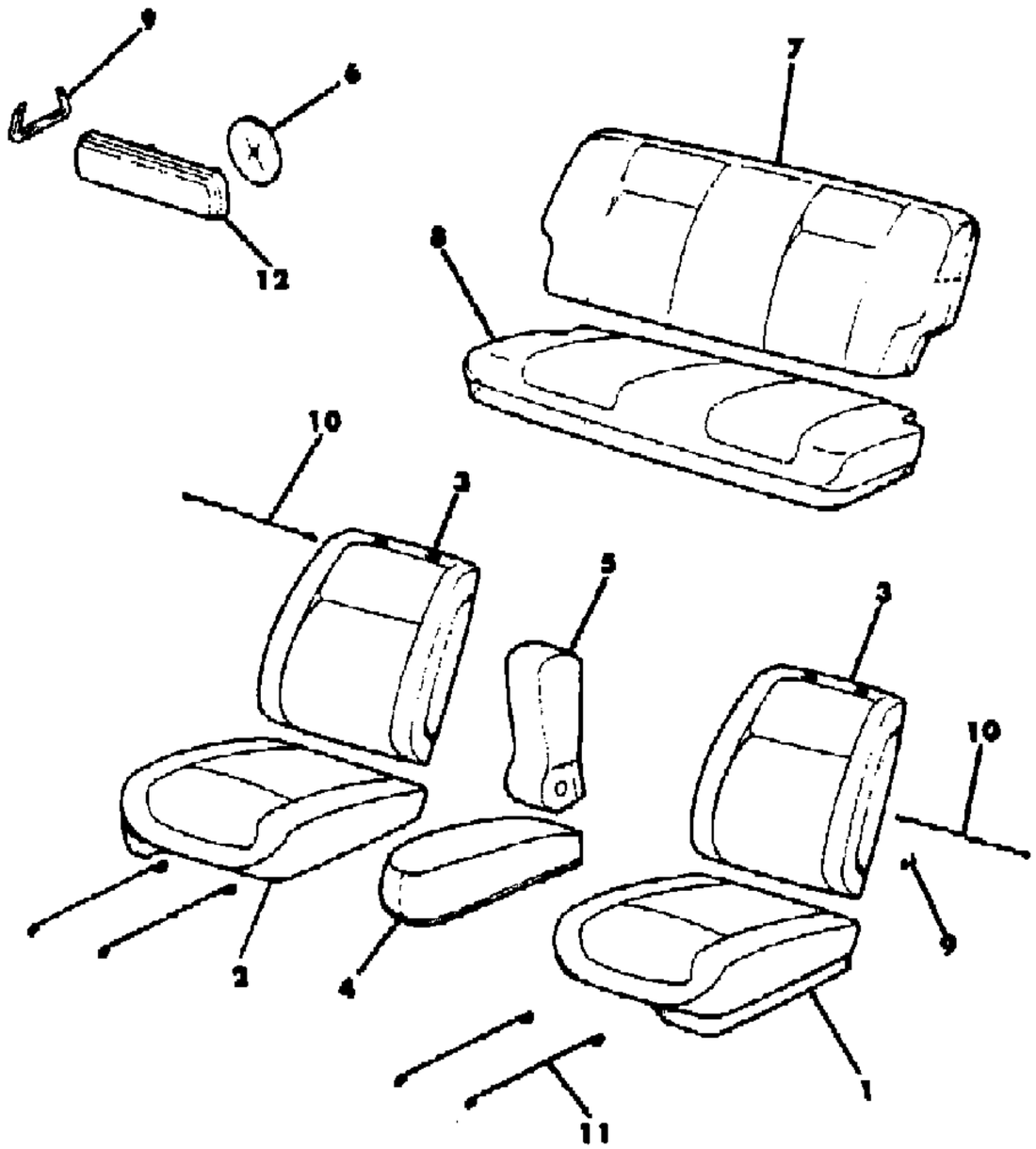

ITEM	PART NUMBER	QTY	BODY	MODEL	DESCRIPTION
	J575 6469	1			Coded "6CD"or"6DD", 1981-82
	J576 2268	1			Coded "6CD"or"6DD", 1983
9	J436 3256	AR			RING
10	J362 1468	2			WIRE, Back Cover
11	J545 2230	4			WIRE, Cover
12					BUTTON, Trim
	J373 4274	AR			Beige
	J372 4698	AR			Black
	J372 3584	AR			Blue, 1981
	J374 1380	1			Slate Blue, 1982
	J373 4275	AR			Nutmeg

MODEL CODES

16=Cherokee 2 Dr.(1981-83)
17=Cherokee 2 Dr.(1981-83)
73=Cherokee 2WD-2 Dr.(1984-86)
74=Cherokee 2WD-4 Dr.(1984-86)
18=Cherokee 4 Dr.(1981-83)
77=Cherokee 4WD-2 Dr.(1984-86)
78=Cherokee 4WD-4 Dr.(1984-86)
85=CJ-5 (1981-83)
86=CJ-6(1981)
87=CJ-7(1981-86)
88=CJ-8, Scrambler(1981-86)
64=Comanche 2WD-6 Ft. Box(1986)
66=Comanche 2WD-7 Ft. Box(1986)
63=Comanche 4WD-6 Ft. Box(1986)
65=Comanche 4WD-7 Ft. Box(1986)
15=Grand Wagoneer 4 Dr.(1984-86)
25=J-10 Truck 7 Ft. Box(1981-84)
26=J10 Truck 8 Ft. Box(1981-86)
27=J-20 Truck 8 Ft. Box(1981-86)
15=Wagoneer 4 Dr.(1981-83)
75=Wagoneer 4WD-4 Dr.(1984-86)

BODY
CJ=CJ-5, CJ-6, CJ-7, CJ-8, Scrambler(1981-86)
MJ=Comanche Pickup(1986)

STYLES
SJ=Wagoneer(1981-83), Grand Wagoneer(1984-86), Cherokee(1981-83), J-10, J-20(1981-86)
XJ=Wagoneer(1984-86), Cherokee(1984-86)

AR = Use as Required - = Non Illustrated Part P.A.R. = Paint as Required

« RETURN TO GROUP INDEX

COVERS, UPHOLSTERY WITH FRONT BUCKET SEATS, FOUR DOOR SJ WAGONEER
Figure 48-2400

81J 048 2400

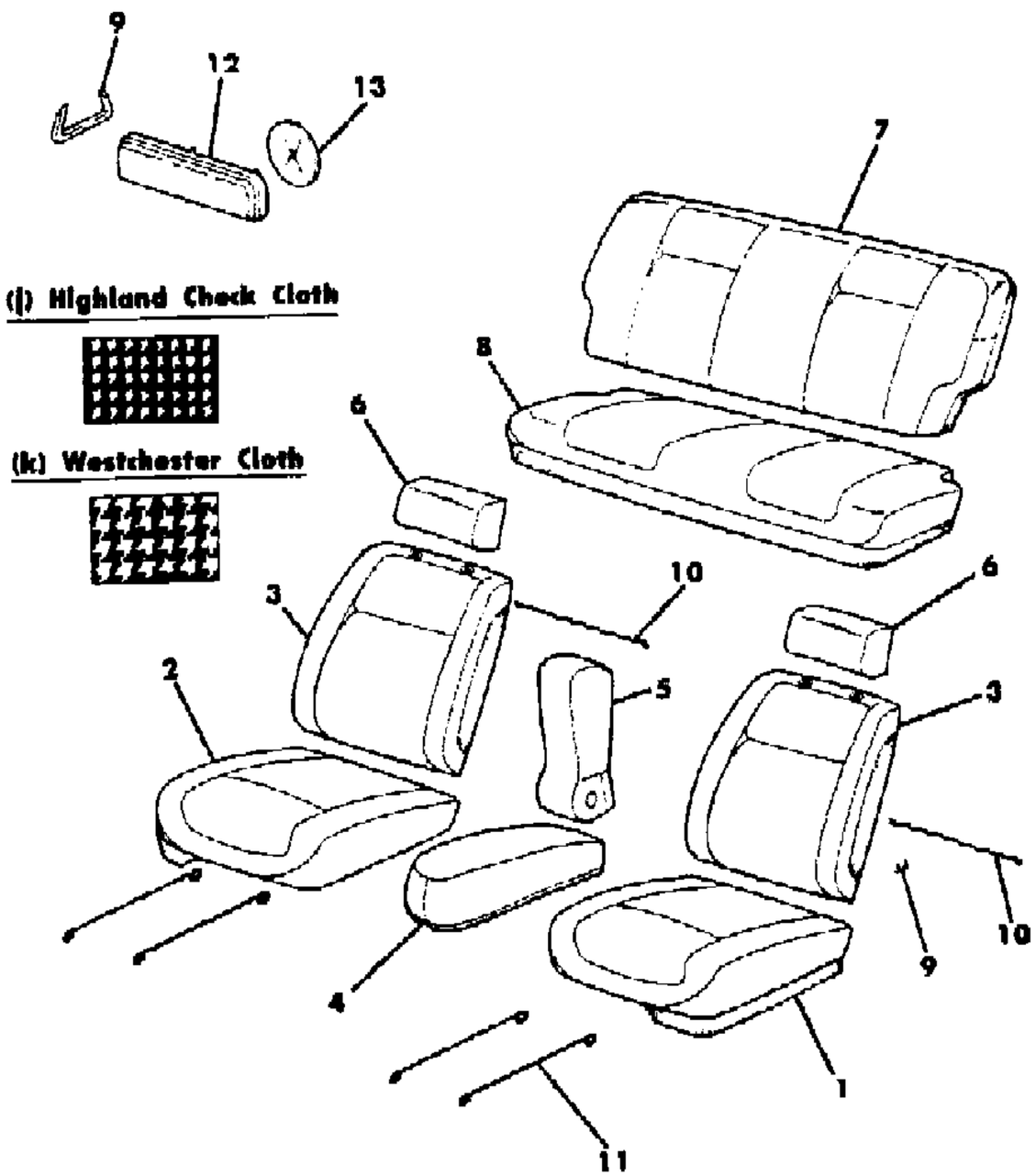

ITEM	PART NUMBER	QTY	BODY	MODEL	DESCRIPTION
1					COVER, Cushion
	J575 6266	1			Coded "1BF", 1981-82
	J576 2850	1			Coded "1BF", 1983
	J575 6278	1			Coded "1BH", 1981-82
	J576 2857	1			Coded "1BH", 1983
	J575 6267	1			Coded "3BF", 1981
	J576 0601	1			Coded "3BF", 1982
	J575 6279	1			Coded "3BH", 1981
	J576 0605	1			Coded "3BH", 1982
	J576 6390	1			Coded "4BL", 1985
	5500 9282	1			Coded "4BL", 1986
	J575 6268	1			Coded "5BF", 1981-82
	J576 2852	1			Coded "5BF", 1983
	J575 6280	1			Coded "5BH", 1981-82
	J576 2859	1			Coded "5BH", 1983
	J575 6290	1			Coded "5BL", 1981-83
	J576 4833	1			Coded "5BL", 1984
	5500 9243	1			Coded "5BL", 1985
	J576 4853	1			Coded "5BN"
	J575 6269	1			Coded "6BF", 1981-82
	J576 2853	1			Coded "6BF", 1983
	J575 6281	1			Coded "6BH", 1981-82
	J576 2860	1			Coded "6BH, 1983
	J575 6291	1			Coded "6BL", 1981-83
	J576 4832	1			Coded "6BL", 1984
	J576 4827	1			Coded "6BN"
	J576 4830	1			Coded "6BW", Highland Check Cloth
	5500 8251	1			Coded "6BW", Westchester Cloth
	J576 6403	1			Coded "9BL", 1985
	5500 9284	1			Coded "9BL", 1986
	J576 6400	1			Coded "9BN"
	J576 6397	1			Coded "9BW"
2					COVER, Cushion
	J575 6274	1			Coded "1BF", 1981-82
	J575 2888	1			Coded "1BF", 1983
	J575 6286	1			Coded "1BH", 1981-82
	J576 2892	1			Coded "1BH", 1983
	J575 6275	1			Coded "3BF", 1981
	J576 0611	1			Coded "3BF", 1982

MODEL CODES

16=Cherokee 2 Dr.(1981-83)	78=Cherokee 4WD-4 Dr.(1984-86)	64=Comanche 2WD-6 Ft. Box(1986)	25=J-10 Truck 7 Ft. Box(1981-84)
17=Cherokee 2 Dr.(1981-83)	85=CJ-5 (1981-83)	66=Comanche 2WD-7 Ft. Box(1986)	26=J10 Truck 8 Ft. Box(1981-86)
73=Cherokee 2WD-2 Dr.(1984-86)	86=CJ-6(1981)	63=Comanche 4WD-6 Ft. Box(1986)	27=J-20 Truck 8 Ft. Box(1981-86)
74=Cherokee 2WD-4 Dr.(1984-86)	87=CJ-7(1981-86)	65=Comanche 4WD-7 Ft. Box(1986)	15=Wagoneer 4 Dr.(1981-83)
18=Cherokee 4 Dr.(1981-83)	88=CJ-8, Scrambler(1981-86)	15=Grand Wagoneer 4 Dr.(1984-86)	75=Wagoneer 4WD-4 Dr.(1984-86)
77=Cherokee 4WD-2 Dr.(1984-86)			

BODY
CJ=CJ-5, CJ-6, CJ-7, CJ-8, Scrambler(1981-86)
MJ=Comanche Pickup(1986)

STYLES
SJ=Wagoneer(1981-83), Grand Wagoneer(1984-86), Cherokee(1981-83), J-10, J-20(1981-86)
XJ=Wagoneer(1984-86), Cherokee(1984-86)

AR = Use as Required - = Non Illustrated Part P.A.R. = Paint as Required

81J 048 2400

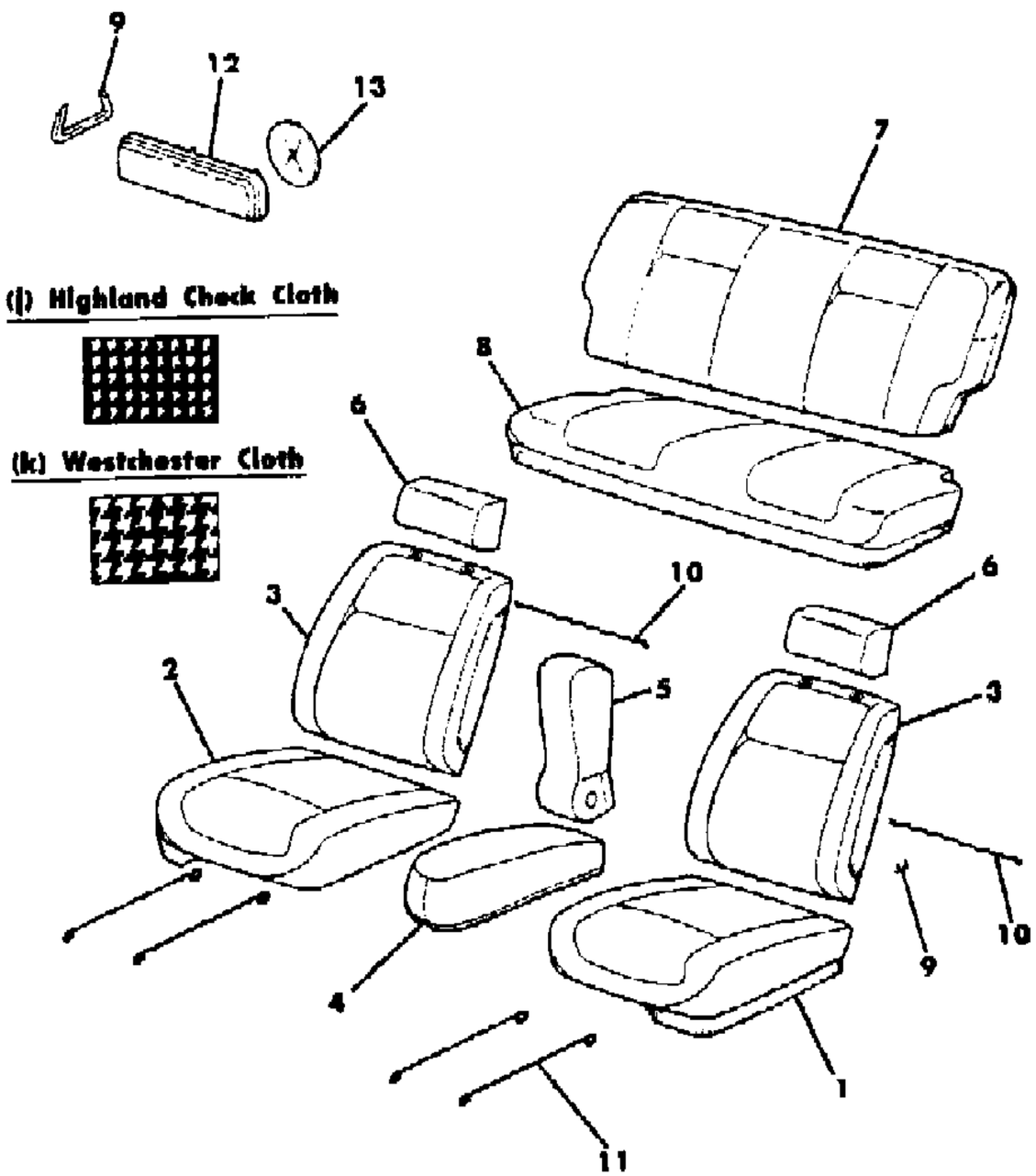

ITEM	PART NUMBER	QTY	BODY	MODEL	DESCRIPTION
	J575 6287	1			Coded "3BH", 1981
	J576 0614	1			Coded "3BH", 1982
	J576 6392	1			Coded "4BL", 1985
	5500 9283	1			Coded "4BL", 1986
	J575 6276	1			Coded "5BF", 1981-82
	J576 2890	1			Coded "5BF", 1983
	J575 6288	1			Coded "5BH", 1981-82
	J576 2894	1			Coded "5BH", 1983
	J575 6294	1			Coded "5BL", 1981-83
	J576 4839	1			Coded "5BL", 1984
	5500 9242	1			Coded "5BL", 1985
	J576 4854	1			Coded "5BN"
	J575 6277	1			Coded "6BF", 1981-82
	J576 2891	1			Coded "6BF", 1983
	J575 6289	1			Coded "6BH", 1981-82
	J576 2895	1			Coded "6BH", 1983
	J575 6295	1			Coded "6BL", 1981-83
	J576 4838	1			Coded "6BL", 1984
	J576 4836	1			Coded "6BN"
	J576 4837	1			Coded "6BW", Highland Check Cloth
	5500 8250	1			Coded "6BW", Westchester Cloth
	J576 6405	1			Coded "9BL", 1985
	5500 9285	1			Coded "9BL", 1986
	J576 6402	1			Coded "9BN"
	J576 6399	1			Coded "9BW"
3					COVER, Back
	J575 6270	2			Coded "1BF", 1981-82
	J576 2861	2			Coded "1BF", 1983
	J575 6282	2			Coded "1BH", 1981-82
	J576 2868	2			Coded "1BH"
	J575 6271	2			Coded "3BF", 1981
	J576 0606	2			Coded "3BF", 1982
	J575 6283	2			Coded "3BH", 1981
	J576 0610	2			Coded "3BH", 1982
	J576 6391	2			Coded "4BL", 1985
	5500 9286	2			Coded "4BL", 1986
	J575 6272	2			Coded "5BF", 1981-82
	J576 2863	2			Coded "5BF", 1983
	J575 6284	2			Coded "5BH", 1981-82

MODEL CODES

16=Cherokee 2 Dr.(1981-83)	78=Cherokee 4WD-4 Dr.(1984-86)	64=Comanche 2WD-6 Ft. Box(1986)	25=J-10 Truck 7 Ft. Box(1981-84)
17=Cherokee 2 Dr.(1981-83)	85=CJ-5 (1981-83)	66=Comanche 2WD-7 Ft. Box(1986)	26=J10 Truck 8 Ft. Box(1981-86)
73=Cherokee 2WD-2 Dr.(1984-86)	86=CJ-6(1981)	63=Comanche 4WD-6 Ft. Box(1986)	27=J-20 Truck 8 Ft. Box(1981-86)
74=Cherokee 2WD-4 Dr.(1984-86)	87=CJ-7(1981-86)	65=Comanche 4WD-7 Ft. Box(1986)	15=Wagoneer 4 Dr.(1981-83)
18=Cherokee 4 Dr.(1981-83)	88=CJ-8, Scrambler(1981-86)	15=Grand Wagoneer 4 Dr.(1984-86)	75=Wagoneer 4WD-4 Dr.(1984-86)
77=Cherokee 4WD-2 Dr.(1984-86)			

BODY
CJ=CJ-5, CJ-6, CJ-7, CJ-8, Scrambler(1981-86)
MJ=Comanche Pickup(1986)

STYLES
SJ=Wagoneer(1981-83), Grand Wagoneer(1984-86), Cherokee(1981-83), J-10, J-20(1981-86)
XJ=Wagoneer(1984-86), Cherokee(1984-86)

AR = Use as Required - = Non Illustrated Part P.A.R. = Paint as Required

COVERS, UPHOLSTERY WITH FRONT BUCKET SEATS, FOUR DOOR SJ WAGONEER
Figure 48-2400

81J 048 2400

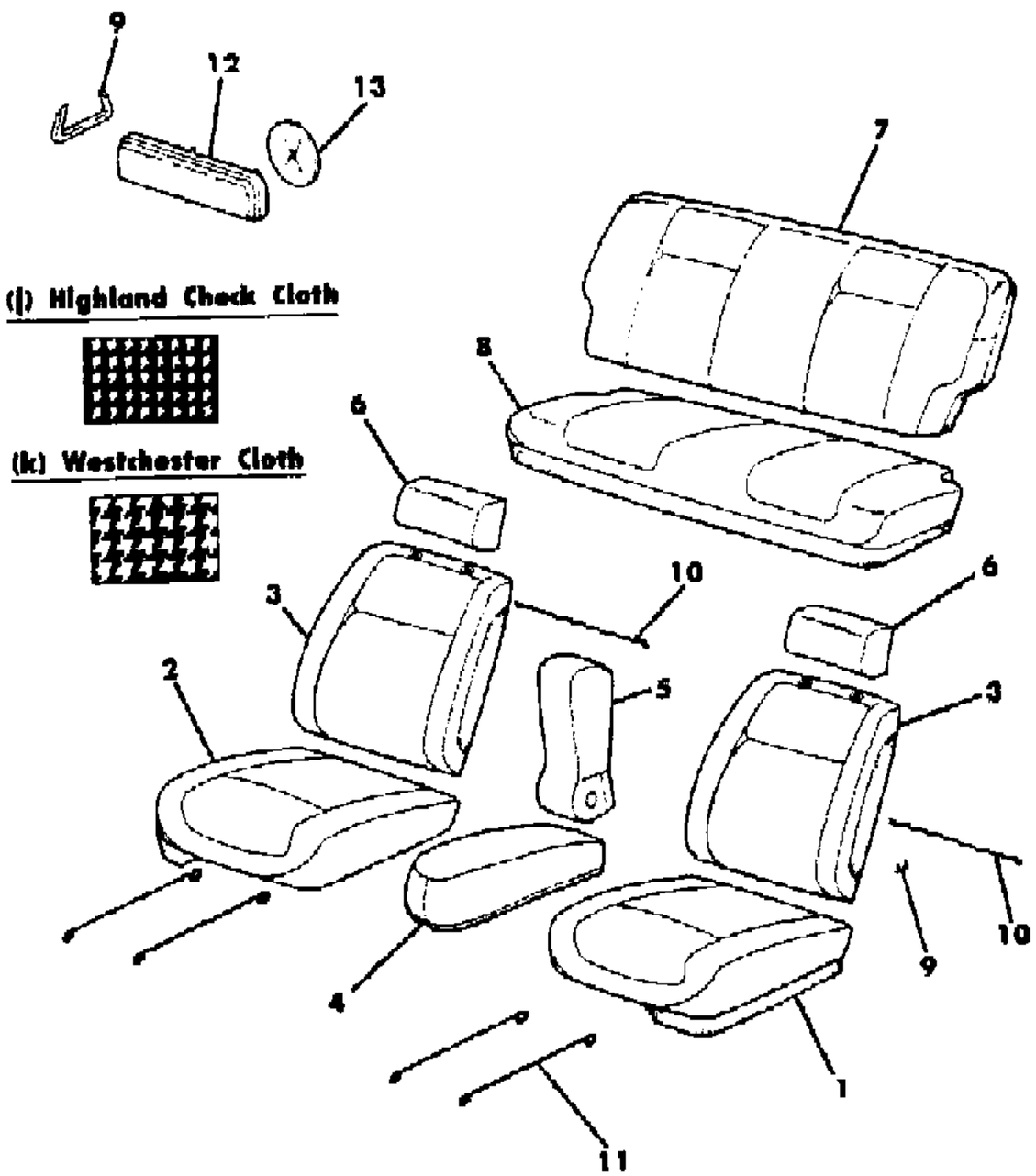

ITEM	PART NUMBER	QTY	BODY	MODEL	DESCRIPTION
	J576 2870	2			Coded "5BH", 1983
	J575 6292	2			Coded "5BL", 1981-83
	J576 4835	2			Coded "5BL", 1984
	5500 9244	2			Coded "5BL", 1985
	J576 4829	2			Coded "5BN"
	J575 6273	2			Coded "6BF", 1981-82
	J576 2864	2			Coded "6BF", 1983
	J575 6285	2			Coded "6BH", 1981-82
	J576 2871	2			Coded "6BH", 1983
	J575 6293	2			Coded "6BL", 1981-83
	J576 4834	2			Coded "6BL", 1984
	J576 4828	2			Coded "6BN"
	J576 4831	2			Coded "6BW", Highland Check Cloth
	5500 8252	2			Coded "6BW", Westchester Cloth
	J576 6404	2			Coded "9BL", 1985
	5500 9287	2			Coded "9BL", 1986
	J576 6401	2			Coded "9BN"
	J576 6398	2			Coded "9BW"
4					COVER, Armrest
	J576 4894	1			Almond, without Grand Wagoneer or Limited Models
	J576 4895	1			Almond, with Grand Wagoneer or Limited Models
	J575 5744	1			Beige, without Grand Wagoneer or Limited Models
	J575 5771	1			Beige, with Grand Wagoneer or Limited Models
	J546 5424	1			Black
	J546 5425	1			Blue, 1981
	J576 0126	1			Slate Blue, 1982
	J576 6368	1			Garnet
	J576 6364	1			Honey, without Grand Wagoneer or Limited Models
	J576 6366	1			Honey, with Grand Wagoneer or Limited Models
	J575 5745	1			Nutmeg, without Grand Wagoneer or Limited Models
	J575 5772	1			Nutmeg, with Grand Wagoneer or Limited Models
	J576 4897	1			Almond, without Grand Wagoneer or Limited Models
	J576 4898	1			Almond, with Grand Wagoneer or Limited Models
	J575 5738	1			Beige, without Grand Wagoneer or Limited Models
	J575 5769	1			Beige, with Grand Wagoneer or Limited Models
	J546 5428	1			Black
	J546 5429	1			Blue, 1981
	J576 0127	1			Slate Blue, 1982
	J576 6369	1			Garnet

MODEL CODES

16=Cherokee 2 Dr.(1981-83)
17=Cherokee 2 Dr.(1981-83)
73=Cherokee 2WD-2 Dr.(1984-86)
74=Cherokee 2WD-4 Dr.(1984-86)
18=Cherokee 4 Dr.(1981-83)
77=Cherokee 4WD-2 Dr.(1984-86)
78=Cherokee 4WD-4 Dr.(1984-86)
85=CJ-5 (1981-83)
86=CJ-6(1981)
87=CJ-7(1981-86)
88=CJ-8, Scrambler(1981-86)
64=Comanche 2WD-6 Ft. Box(1986)
66=Comanche 2WD-7 Ft. Box(1986)
63=Comanche 4WD-6 Ft. Box(1986)
65=Comanche 4WD-7 Ft. Box(1986)
15=Grand Wagoneer 4 Dr.(1984-86)
25=J-10 Truck 7 Ft. Box(1981-84)
26=J10 Truck 8 Ft. Box(1981-86)
27=J-20 Truck 8 Ft. Box(1981-86)
15=Wagoneer 4 Dr.(1981-83)
75=Wagoneer 4WD-4 Dr.(1984-86)

BODY
CJ=CJ-5, CJ-6, CJ-7, CJ-8, Scrambler(1981-86)
MJ=Comanche Pickup(1986)

STYLES
SJ=Wagoneer(1981-83), Grand Wagoneer(1984-86), Cherokee(1981-83), J-10, J-20(1981-86)
XJ=Wagoneer(1984-86), Cherokee(1984-86)

AR = Use as Required - = Non Illustrated Part P.A.R. = Paint as Required

COVERS, UPHOLSTERY WITH FRONT BUCKET SEATS, FOUR DOOR SJ WAGONEER
Figure 48-2400

81J 048 2400

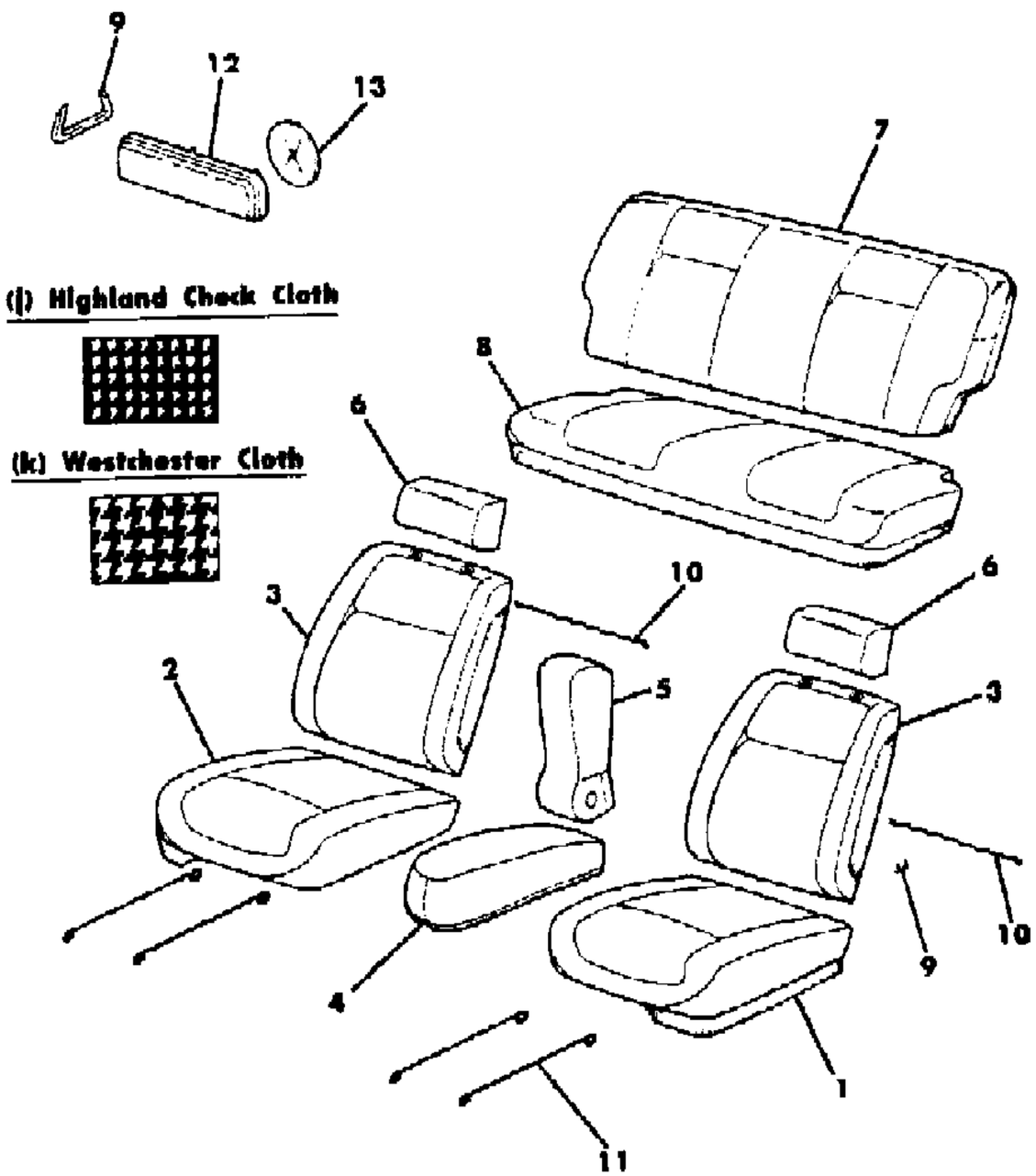

ITEM	PART NUMBER	QTY	BODY	MODEL	DESCRIPTION
	J576 6365	1			Honey, without Grand Wagoneer or Limited Models
	J576 6367	1			Honey, with Grand Wagoneer or Limited Models
	J575 5739	1			Nutmeg, without Grand Wagoneer or Limited Models
	J575 5770	1			Nutmeg, with Grand Wagoneer or Limited Models
6					COVER, Headrest
	5500 5260	2			Garnet
	5500 6124	2			Honey
	5500 5261	2			Nutmeg
7					COVER, Back
	J575 6507	1			Coded "1BF", 1981-82
	J576 2282	1			Coded "1BF", 1983
	J575 6499	1			Coded "1BH", 1981-82
	J576 2288	1			Coded "1BH", 1983
	J575 6508	1			Coded "3BF", 1981
	J576 0697	1			Coded "3BF", 1982
	J575 6500	1			Coded "3BH", 1981
	J576 0695	1			Coded "3BH", 1982
	J576 6347	1			Coded "4BL", 1985
	5500 9290	1			Coded "4BL", 1986
	J575 6509	1			Coded "5BF", 1981-82
	J576 2284	1			Coded "5BF", 1983
	J575 6501	1			Coded "5BH", 1981-82
	J576 2290	1			Coded "5BH", 1983
	J575 6513	1			Coded "5BL", 1981-83
	J576 4811	1			Coded "5BL", 1984
	5500 9240	1			Coded "5BL", 1985
	J576 4805	1			Coded "5BN"
	J575 6510	1			Coded "6BF", 1981-82
	J576 2285	1			Coded "6BF", 1983
	J575 6502	1			Coded "6BH", 1981-82
	J576 2291	1			Coded "6BH", 1983
	J575 6514	1			Coded "6BL", 1981-83
	J576 4810	1			Coded "6BL", 1984
	J576 4804	1			Coded "6BN"
	J576 4807	1			Coded "6BW", Highland Check Cloth
	5500 8254	1			Coded "6BW", Westchester Cloth
	J576 6348	1			Coded "9BL", 1985
	5500 9291	1			Coded "9BL", 1986
	J576 6352	1			Coded "9BN"

MODEL CODES

16=Cherokee 2 Dr.(1981-83)
17=Cherokee 2 Dr.(1981-83)
73=Cherokee 2WD-2 Dr.(1984-86)
74=Cherokee 2WD-4 Dr.(1984-86)
18=Cherokee 4 Dr.(1981-83)
77=Cherokee 4WD-2 Dr.(1984-86)
78=Cherokee 4WD-4 Dr.(1984-86)
85=CJ-5 (1981-83)
86=CJ-6(1981)
87=CJ-7(1981-86)
88=CJ-8, Scrambler(1981-86)
64=Comanche 2WD-6 Ft. Box(1986)
66=Comanche 2WD-7 Ft. Box(1986)
63=Comanche 4WD-6 Ft. Box(1986)
65=Comanche 4WD-7 Ft. Box(1986)
15=Grand Wagoneer 4 Dr.(1984-86)
25=J-10 Truck 7 Ft. Box(1981-84)
26=J10 Truck 8 Ft. Box(1981-86)
27=J-20 Truck 8 Ft. Box(1981-86)
15=Wagoneer 4 Dr.(1981-83)
75=Wagoneer 4WD-4 Dr.(1984-86)

BODY
CJ=CJ-5, CJ-6, CJ-7, CJ-8, Scrambler(1981-86)
MJ=Comanche Pickup(1986)

STYLES
SJ=Wagoneer(1981-83), Grand Wagoneer(1984-86), Cherokee(1981-83), J-10, J-20(1981-86)
XJ=Wagoneer(1984-86), Cherokee(1984-86)

AR = Use as Required - = Non Illustrated Part P.A.R. = Paint as Required

COVERS, UPHOLSTERY WITH FRONT BUCKET SEATS, FOUR DOOR SJ WAGONEER
Figure 48-2400

81J 048 2400

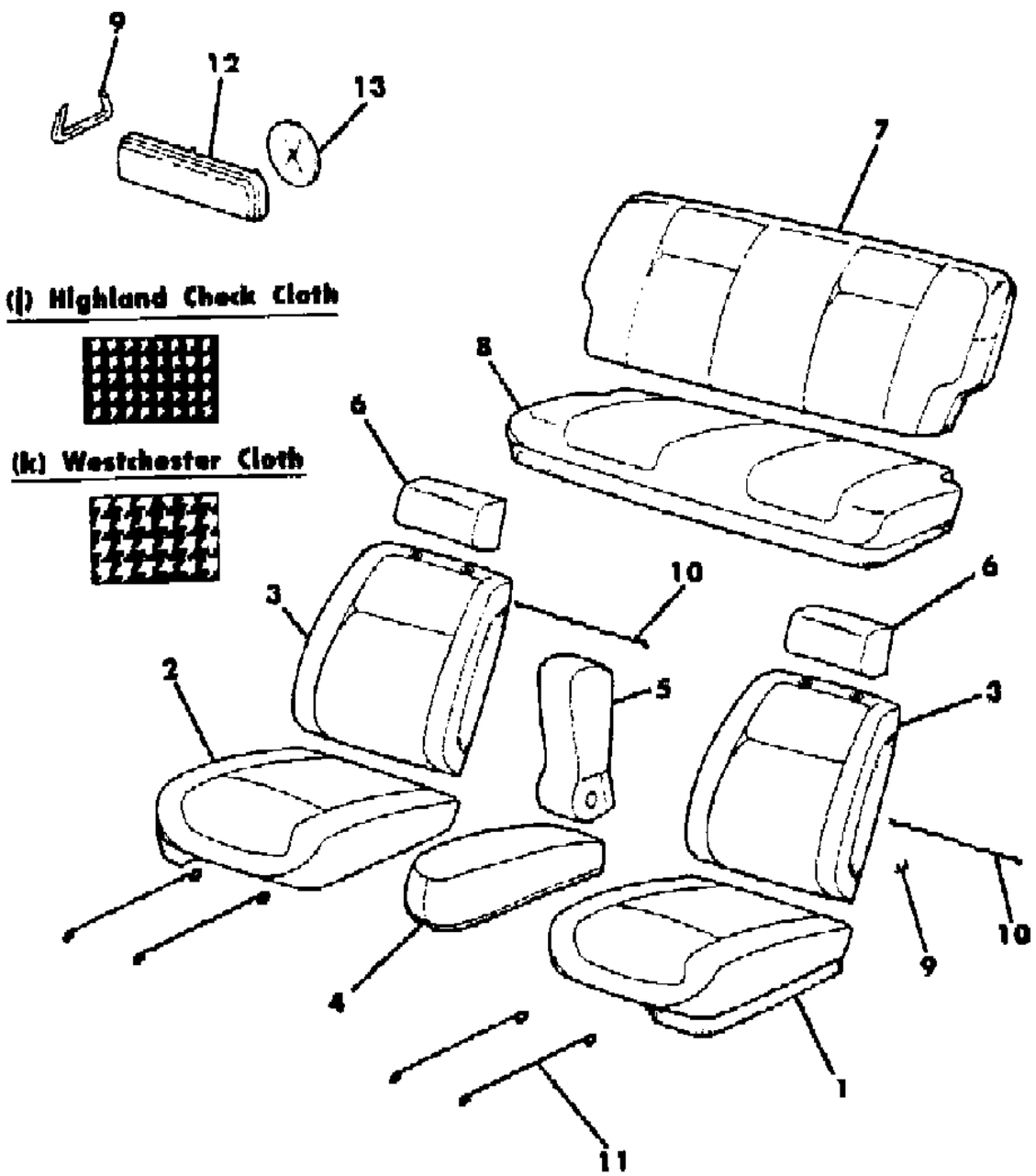

ITEM	PART NUMBER	QTY	BODY	MODEL	DESCRIPTION
	J576 6350	1			Coded "9BW"
8					COVER, Cushion
	J575 6503	1			Coded "1BF", 1981-82
	J576 2269	1			Coded "1BF", 1983
	J575 6495	1			Coded "1BH", 1981-82
	J576 2275	1			Coded "1BH", 1983
	J575 6504	1			Coded "3BF", 1981
	J576 0696	1			Coded "3BF", 1982
	J575 6496	1			Coded "3BH", 1981
	J576 0694	1			Coded "3BH", 1982
	J576 6345	1			Coded "4BL", 1985
	5500 9288	1			Coded "4BL", 1986
	J575 6505	1			Coded "5BF", 1981-82
	J576 2271	1			Coded "5BF", 1983
	J575 6497	1			Coded "5BH", 1981-82
	J576 2277	1			Coded "5BH", 1983
	J575 6511	1			Coded "5BL", 1981-83
	J576 4809	1			Coded "5BL", 1984
	5500 9239	1			Coded "5BL", 1985
	J576 4803	1			Coded "5BN"
	J575 6506	1			Coded "6BF", 1981-82
	J576 2272	1			Coded "6BF", 1983
	J575 6498	1			Coded "6BH", 1981-82
	J576 2278	1			Coded "6BH", 1983
	J575 6512	1			Coded "6BL", 1981-83
	J576 4808	1			Coded "6BL", 1984
	J576 4802	1			Coded "6BN"
	J576 4806	1			Coded "6BW", Highland Check Cloth
	5500 8253	1			Coded "6BW", Westchester Cloth
	J576 6346	1			Coded "9BL", 1985
	5500 9289	1			Coded "9BL", 1986
	J576 6351	1			Coded "9BN"
	J576 6349	1			Coded "9BW"
9	J436 3256	AR			RING
10	J362 1468	2			WIRE, Back Cover
11	J545 2230	4			WIRE, Cover
12					BUTTON, Trim
	J373 4274	AR			Beige
	J372 4698	AR			Black

MODEL CODES

16=Cherokee 2 Dr.(1981-83)
17=Cherokee 2 Dr.(1981-83)
73=Cherokee 2WD-2 Dr.(1984-86)
74=Cherokee 2WD-4 Dr.(1984-86)
18=Cherokee 4 Dr.(1981-83)
77=Cherokee 4WD-2 Dr.(1984-86)
78=Cherokee 4WD-4 Dr.(1984-86)
85=CJ-5 (1981-83)
86=CJ-6(1981)
87=CJ-7(1981-86)
88=CJ-8, Scrambler(1981-86)
64=Comanche 2WD-6 Ft. Box(1986)
66=Comanche 2WD-7 Ft. Box(1986)
63=Comanche 4WD-6 Ft. Box(1986)
65=Comanche 4WD-7 Ft. Box(1986)
15=Grand Wagoneer 4 Dr.(1984-86)
25=J-10 Truck 7 Ft. Box(1981-84)
26=J10 Truck 8 Ft. Box(1981-86)
27=J-20 Truck 8 Ft. Box(1981-86)
15=Wagoneer 4 Dr.(1981-83)
75=Wagoneer 4WD-4 Dr.(1984-86)

BODY
CJ=CJ-5, CJ-6, CJ-7, CJ-8, Scrambler(1981-86)
MJ=Comanche Pickup(1986)

STYLES
SJ=Wagoneer(1981-83), Grand Wagoneer(1984-86), Cherokee(1981-83), J-10, J-20(1981-86)
XJ=Wagoneer(1984-86), Cherokee(1984-86)

AR = Use as Required - = Non Illustrated Part P.A.R. = Paint as Required

COVERS, UPHOLSTERY WITH FRONT BUCKET SEATS, FOUR DOOR SJ WAGONEER
Figure 48-2400

81J 048 2400

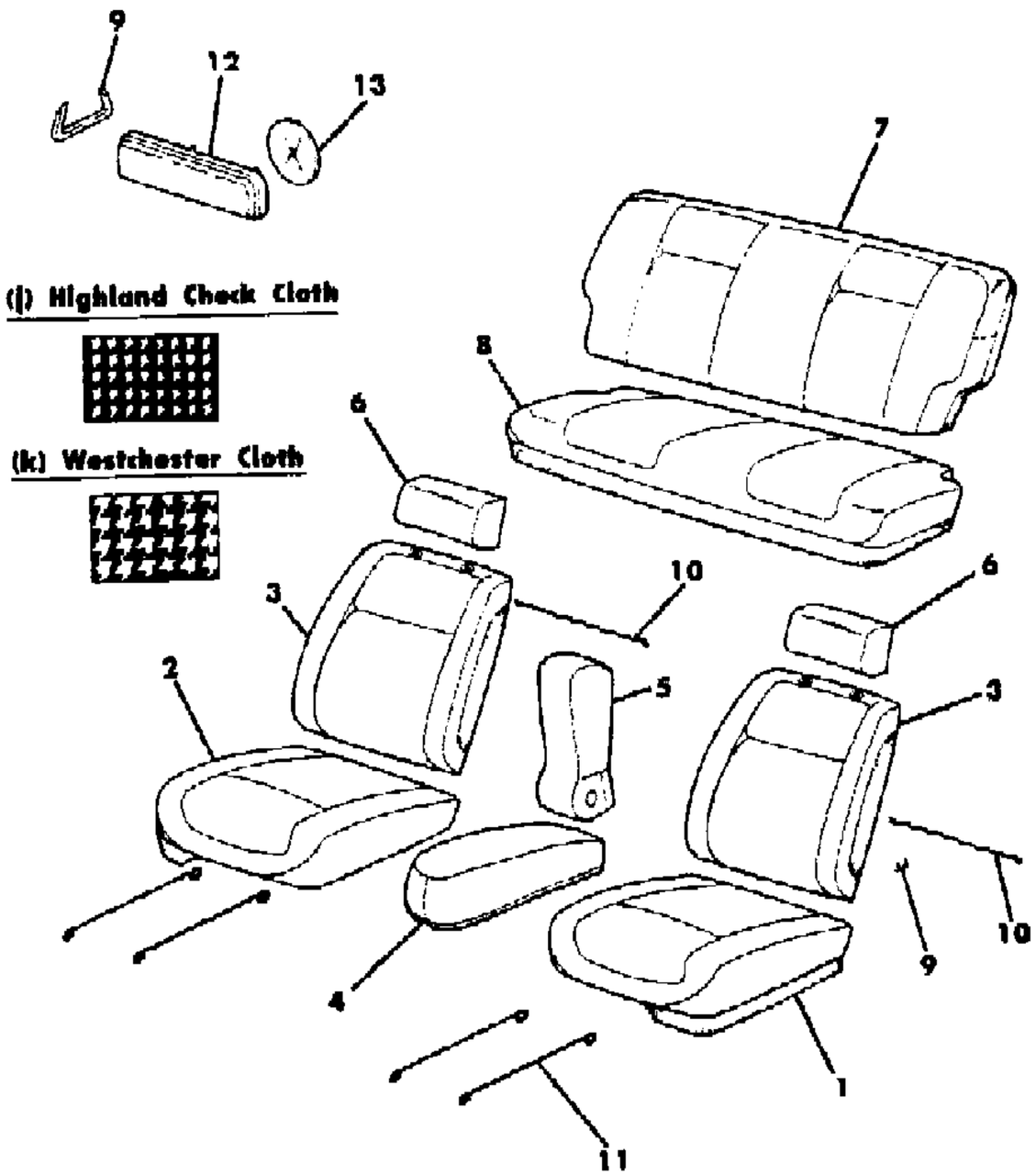

ITEM	PART NUMBER	QTY	BODY	MODEL	DESCRIPTION
	J372 3584	AR			Blue, 1981
	J374 1380	AR			Slate Blue, 1983
	3500 5249	AR			Honey
	J373 4275	AR			Nutmeg
13	J400 5214	AR			RETAINER

MODEL CODES

16=Cherokee 2 Dr.(1981-83)
17=Cherokee 2 Dr.(1981-83)
73=Cherokee 2WD-2 Dr.(1984-86)
74=Cherokee 2WD-4 Dr.(1984-86)
18=Cherokee 4 Dr.(1981-83)
77=Cherokee 4WD-2 Dr.(1984-86)
78=Cherokee 4WD-4 Dr.(1984-86)
85=CJ-5 (1981-83)
86=CJ-6(1981)
87=CJ-7(1981-86)
88=CJ-8, Scrambler(1981-86)
64=Comanche 2WD-6 Ft. Box(1986)
66=Comanche 2WD-7 Ft. Box(1986)
63=Comanche 4WD-6 Ft. Box(1986)
65=Comanche 4WD-7 Ft. Box(1986)
15=Grand Wagoneer 4 Dr.(1984-86)
25=J-10 Truck 7 Ft. Box(1981-84)
26=J10 Truck 8 Ft. Box(1981-86)
27=J-20 Truck 8 Ft. Box(1981-86)
15=Wagoneer 4 Dr.(1981-83)
75=Wagoneer 4WD-4 Dr.(1984-86)

BODY
CJ=CJ-5, CJ-6, CJ-7, CJ-8, Scrambler(1981-86)
MJ=Comanche Pickup(1986)

STYLES
SJ=Wagoneer(1981-83), Grand Wagoneer(1984-86), Cherokee(1981-83), J-10, J-20(1981-86)
XJ=Wagoneer(1984-86), Cherokee(1984-86)

AR = Use as Required - = Non Illustrated Part P.A.R. = Paint as Required

« RETURN TO GROUP INDEX

FRAME AND PAD FRONT BUCKET SEAT, FIXED HIGH BACK J10, J20
Figure 48-2500

81J 048 2500

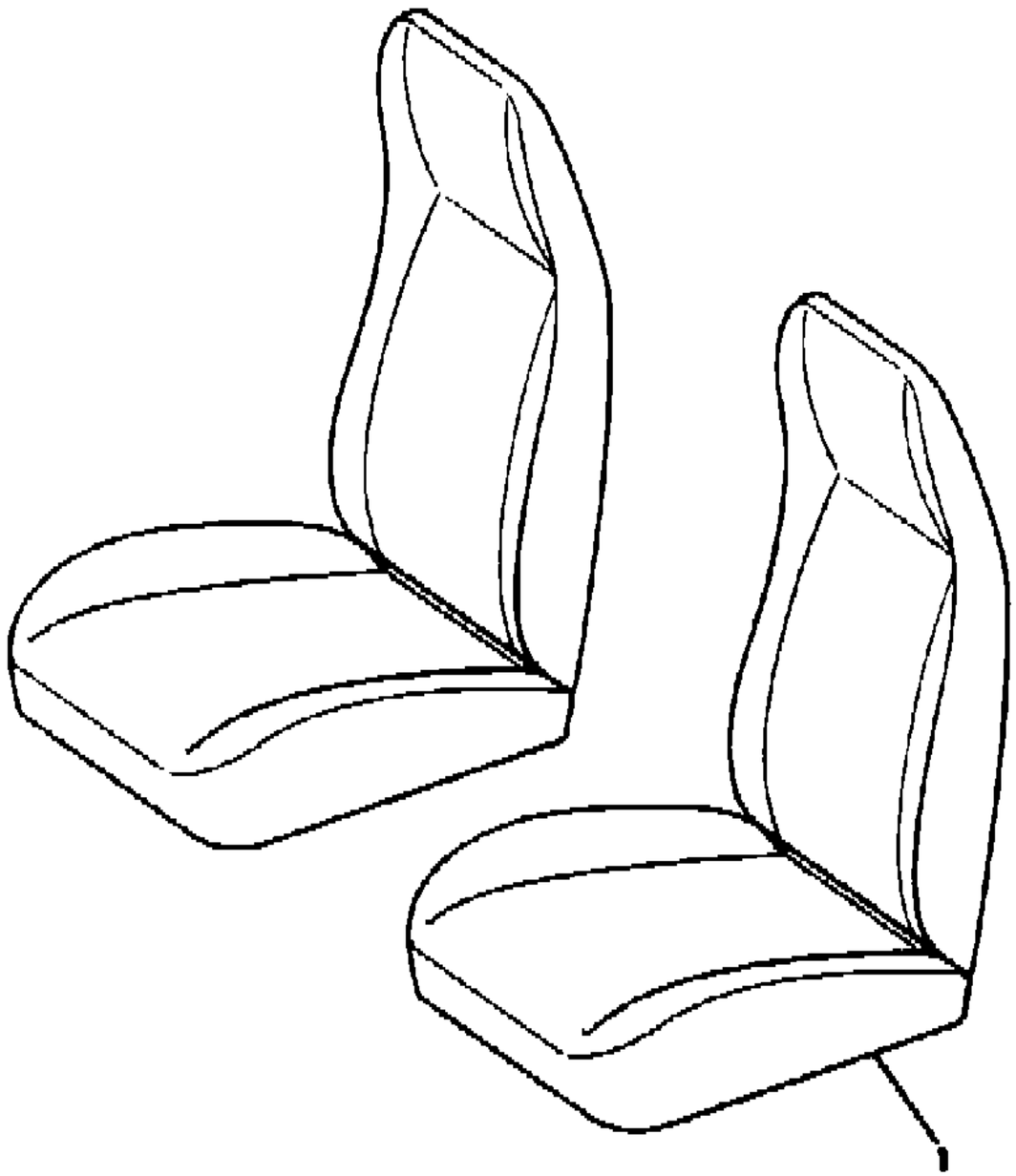

ITEM	PART NUMBER	QTY	BODY	MODEL	DESCRIPTION
1	J575 0571	2			FRAME, Seat, Including Pad

MODEL CODES
16=Cherokee 2 Dr.(1981-83)
17=Cherokee 2 Dr.(1981-83)
73=Cherokee 2WD-2 Dr.(1984-86)
74=Cherokee 2WD-4 Dr.(1984-86)
18=Cherokee 4 Dr.(1981-83)
77=Cherokee 4WD-2 Dr.(1984-86)
78=Cherokee 4WD-4 Dr.(1984-86)
85=CJ-5 (1981-83)
86=CJ-6(1981)
87=CJ-7(1981-86)
88=CJ-8, Scrambler(1981-86)
64=Comanche 2WD-6 Ft. Box(1986)
66=Comanche 2WD-7 Ft. Box(1986)
63=Comanche 4WD-6 Ft. Box(1986)
65=Comanche 4WD-7 Ft. Box(1986)
15=Grand Wagoneer 4 Dr.(1984-86)
25=J-10 Truck 7 Ft. Box(1981-84)
26=J10 Truck 8 Ft. Box(1981-86)
27=J-20 Truck 8 Ft. Box(1981-86)
15=Wagoneer 4 Dr.(1981-83)
75=Wagoneer 4WD-4 Dr.(1984-86)

BODY
CJ=CJ-5, CJ-6, CJ-7, CJ-8, Scrambler(1981-86)
MJ=Comanche Pickup(1986)

STYLES
SJ=Wagoneer(1981-83), Grand Wagoneer(1984-86), Cherokee(1981-83), J-10, J-20(1981-86)
XJ=Wagoneer(1984-86), Cherokee(1984-86)

AR = Use as Required - = Non Illustrated Part P.A.R. = Paint as Required

« RETURN TO GROUP INDEX

COVERS, UPHOLSTERY FRONT BUCKET SEATS J10, J20
Figure 48-2600

81J 048 2600

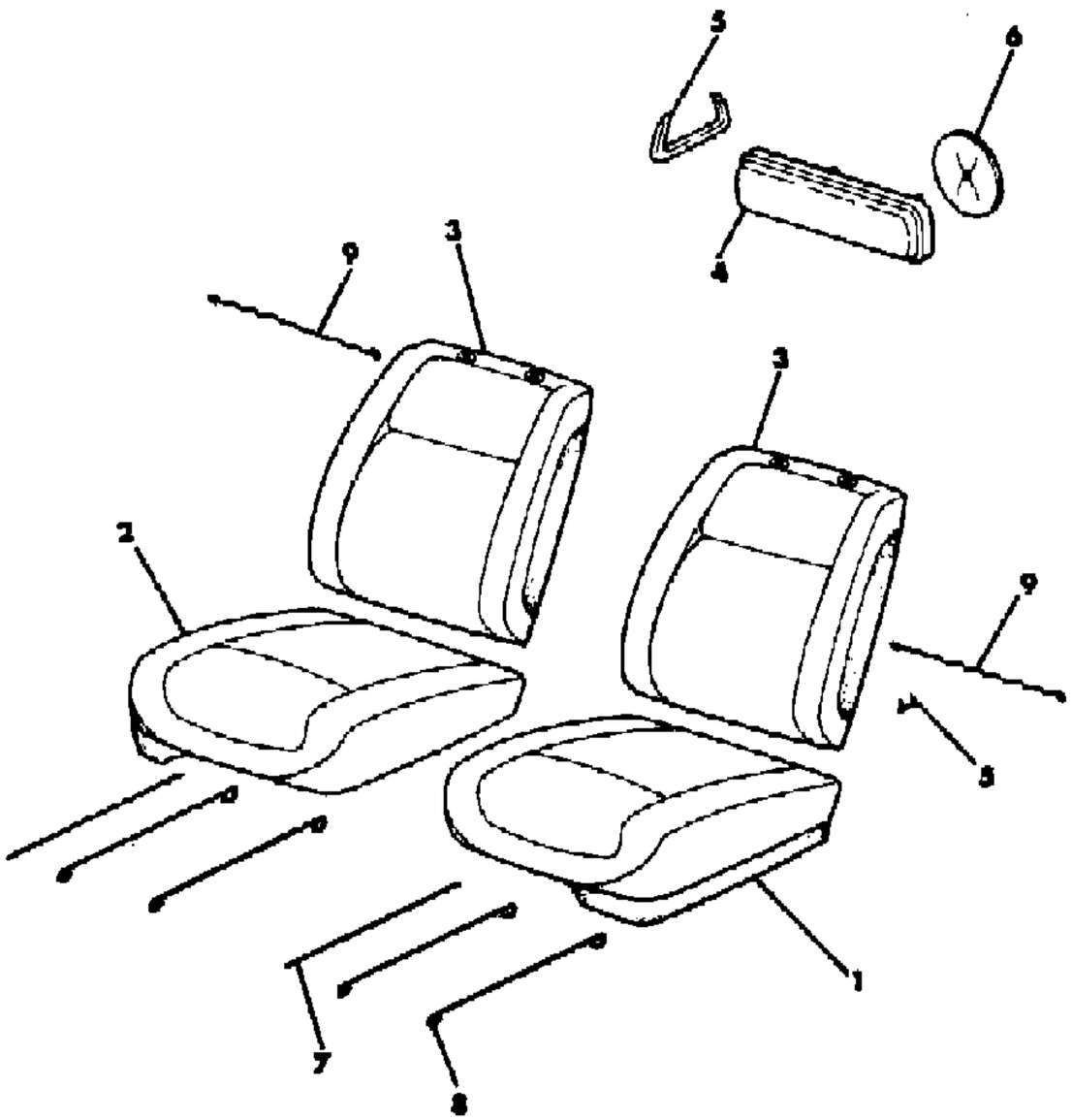

ITEM	PART NUMBER	QTY	BODY	MODEL	DESCRIPTION
1					COVER, Cushion
	J546 5243	1			Coded "1DD", 1981-82
	J576 2906	1			Coded "1DD", 1983
	J575 6236	1			Coded "1DE"or"1DK"
	J576 4840	1			Coded "1DQ"
	J575 6311	1			Coded "1EJ", 1981
	J576 0857	1			Coded "1EJ", 1982
	J576 2024	1			Coded "1EJ", 1983
	J576 4517	1			Coded "1EJ", 1984-86
	J546 5244	1			Coded "3DD", 1981
	J576 0616	1			Coded "3DD", 1982
	J576 2907	1			Coded "3DD", 1983
	J575 6237	1			Coded "3DE", 1981
	J576 0618	1			Coded "3DE", 1982-83
	J575 6238	1			Coded "5DE"or"5DK"
	J576 4842	1			Coded "5DQ"or"5DW"
	J575 5634	1			Coded "5EJ", 1981
	J576 0858	1			Coded "5EJ", 1982
	J576 2025	1			Coded "5EJ", 1983-86
	J575 6209	1			Coded "6DD", 1981-82
	J576 2908	1			Coded "6DD", 1983
	J576 6239	1			Coded "6DE"
	J576 4841	1			Coded "6DW"
2					COVER, Cushion
	J546 5235	1			Coded "1DD", 1981-82
	J576 2927	1			Coded "1DD", 1983
	J575 6244	1			Coded "1DE"or"1DK"
	J576 4846	1			Coded "1DQ"
	J575 6313	1			Coded "1EJ", 1981
	J576 0859	1			Coded "1EB", 1982
	J576 2028	1			Coded "1EJ", 1983
	J576 4518	1			Coded "1EJ", 1984-86
	J546 5236	1			Coded "3DD", 1981
	J576 0624	1			Coded "3DD", 1982
	J576 2928	1			Coded "3DD", 1983
	J575 6245	1			Coded "3DE", 1981
	J576 0626	1			Coded "3DE", 1982-83
	J575 6246	1			Coded "5DE"or"5DK"
	J576 4848	1			Coded "5DQ"or"5DW"

MODEL CODES

16=Cherokee 2 Dr.(1981-83)
17=Cherokee 2 Dr.(1981-83)
73=Cherokee 2WD-2 Dr.(1984-86)
74=Cherokee 2WD-4 Dr.(1984-86)
18=Cherokee 4 Dr.(1981-83)
77=Cherokee 4WD-2 Dr.(1984-86)
78=Cherokee 4WD-4 Dr.(1984-86)
85=CJ-5 (1981-83)
86=CJ-6(1981)
87=CJ-7(1981-86)
88=CJ-8, Scrambler(1981-86)
64=Comanche 2WD-6 Ft. Box(1986)
66=Comanche 2WD-7 Ft. Box(1986)
63=Comanche 4WD-6 Ft. Box(1986)
65=Comanche 4WD-7 Ft. Box(1986)
15=Grand Wagoneer 4 Dr.(1984-86)
25=J-10 Truck 7 Ft. Box(1981-84)
26=J10 Truck 8 Ft. Box(1981-86)
27=J-20 Truck 8 Ft. Box(1981-86)
15=Wagoneer 4 Dr.(1981-83)
75=Wagoneer 4WD-4 Dr.(1984-86)

BODY
CJ=CJ-5, CJ-6, CJ-7, CJ-8, Scrambler(1981-86)
MJ=Comanche Pickup(1986)

STYLES
SJ=Wagoneer(1981-83), Grand Wagoneer(1984-86), Cherokee(1981-83), J-10, J-20(1981-86)
XJ=Wagoneer(1984-86), Cherokee(1984-86)

AR = Use as Required - = Non Illustrated Part P.A.R. = Paint as Required

« RETURN TO GROUP INDEX »

COVERS, UPHOLSTERY FRONT BUCKET SEATS J10, J20
Figure 48-2600

81J 048 2600

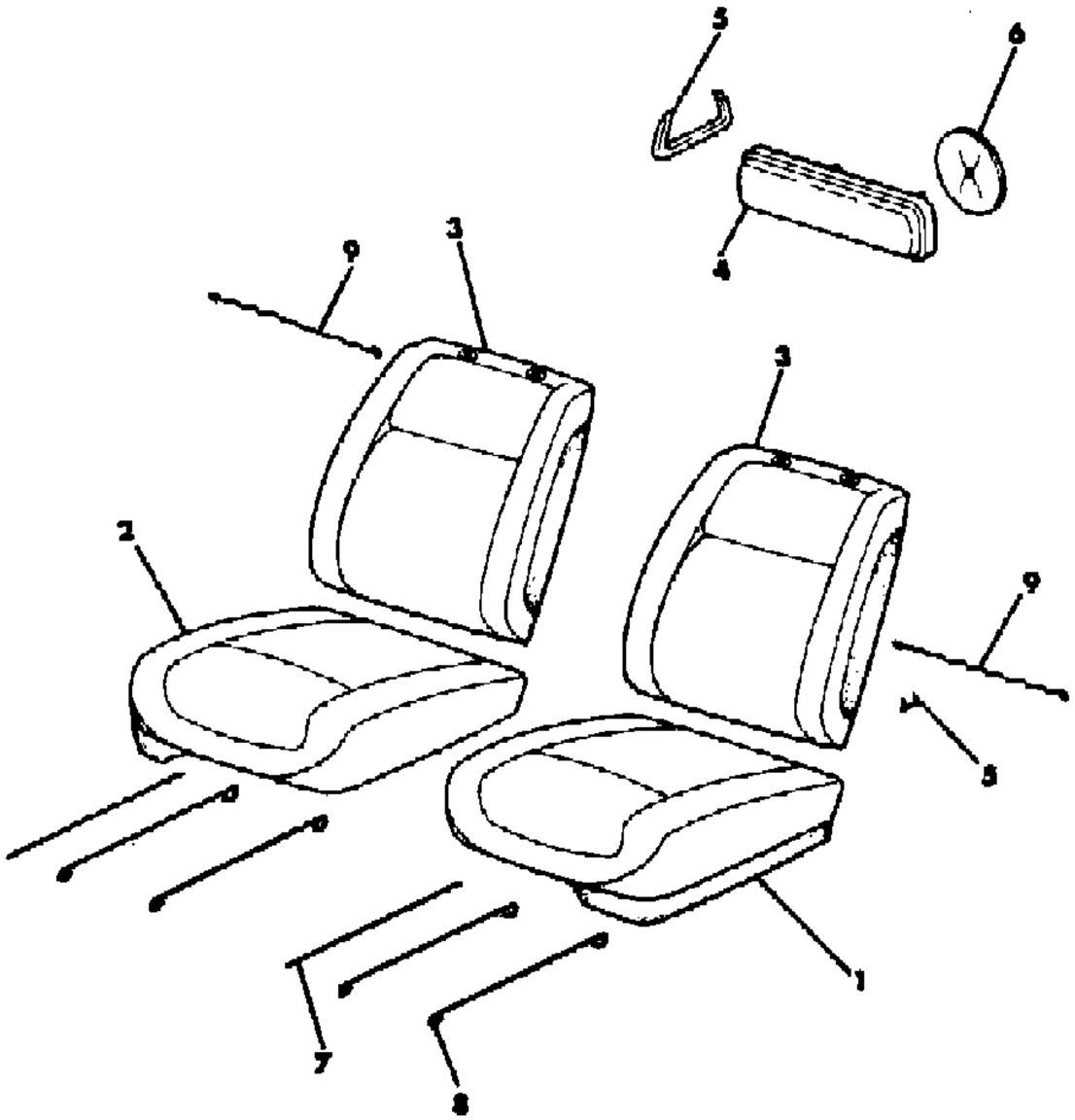

ITEM	PART NUMBER	QTY	BODY	MODEL	DESCRIPTION
	J575 5636	1			Coded "5EJ", 1981
	J576 0860	1			Coded "5EJ", 1982
	J576 2029	1			Coded "5EJ", 1983-86
	J575 6211	1			Coded "6DD", 1981-82
	J576 2929	1			Coded "6DD", 1983
	J575 6247	1			Coded "6DE"
	J576 4847	1			Coded "6DW"
3					COVER, Back
	J546 5247	2			Coded "1DD", 1981-82
	J576 2911	2			Coded "1DD", 1983
	J575 6240	2			Coded "1DE"or"1DK"
	J576 4843	2			Coded "1DQ"
	J575 6312	2			Coded "1EJ", 1981
	J576 0855	2			Coded "1EJ", 1982
	J576 2026	2			Coded "1EJ", 1983
	J576 4519	2			Coded "1EJ", 1984-86
	J546 5248	2			Coded "3DD", 1981
	J576 0621	2			Coded "3DD", 1982
	J576 2912	2			Coded "3DD", 1983
	J575 6241	2			Coded "3DE", 1981
	J576 0623	2			Coded "3DE", 1982-83
	J575 6242	2			Coded "5DE"or"5DK"
	J576 4845	2			Coded "5DQ"or"5DW"
	J575 5635	2			Coded "5EJ", 1981
	J576 0856	2			Coded "5EJ", 1982
	J576 2027	2			Coded "5EJ", 1983-86
	J575 6210	2			Coded "6DD", 1981-82
	J576 2913	2			Coded "6DD", 1983
	J575 6243	2			Coded "6DE"
	J576 4844	2			Coded "6DW"
4					BUTTON, Trim
	3500 5248	AR			Almond
	J373 4274	AR			Beige
	J372 4698	AR			Black, 1981-83
	3500 5246	AR			Black, 1984-86
	J372 3584	AR			Medium Blue
	J374 1380	AR			Slate Blue
	3500 5249	AR			Honey
	J373 4275	AR			Nutmeg, 1981-83

MODEL CODES

16=Cherokee 2 Dr.(1981-83)
17=Cherokee 2 Dr.(1981-83)
73=Cherokee 2WD-2 Dr.(1984-86)
74=Cherokee 2WD-4 Dr.(1984-86)
18=Cherokee 4 Dr.(1981-83)
77=Cherokee 4WD-2 Dr.(1984-86)
78=Cherokee 4WD-4 Dr.(1984-86)
85=CJ-5 (1981-83)
86=CJ-6(1981)
87=CJ-7(1981-86)
88=CJ-8, Scrambler(1981-86)
64=Comanche 2WD-6 Ft. Box(1986)
66=Comanche 2WD-7 Ft. Box(1986)
63=Comanche 4WD-6 Ft. Box(1986)
65=Comanche 4WD-7 Ft. Box(1986)
15=Grand Wagoneer 4 Dr.(1984-86)
25=J-10 Truck 7 Ft. Box(1981-84)
26=J10 Truck 8 Ft. Box(1981-86)
27=J-20 Truck 8 Ft. Box(1981-86)
15=Wagoneer 4 Dr.(1981-83)
75=Wagoneer 4WD-4 Dr.(1984-86)

BODY
CJ=CJ-5, CJ-6, CJ-7, CJ-8, Scrambler(1981-86)
MJ=Comanche Pickup(1986)

STYLES
SJ=Wagoneer(1981-83), Grand Wagoneer(1984-86), Cherokee(1981-83), J-10, J-20(1981-86)
XJ=Wagoneer(1984-86), Cherokee(1984-86)

AR = Use as Required - = Non Illustrated Part P.A.R. = Paint as Required

COVERS, UPHOLSTERY FRONT BUCKET SEATS J10, J20
Figure 48-2600

81J 048 2600

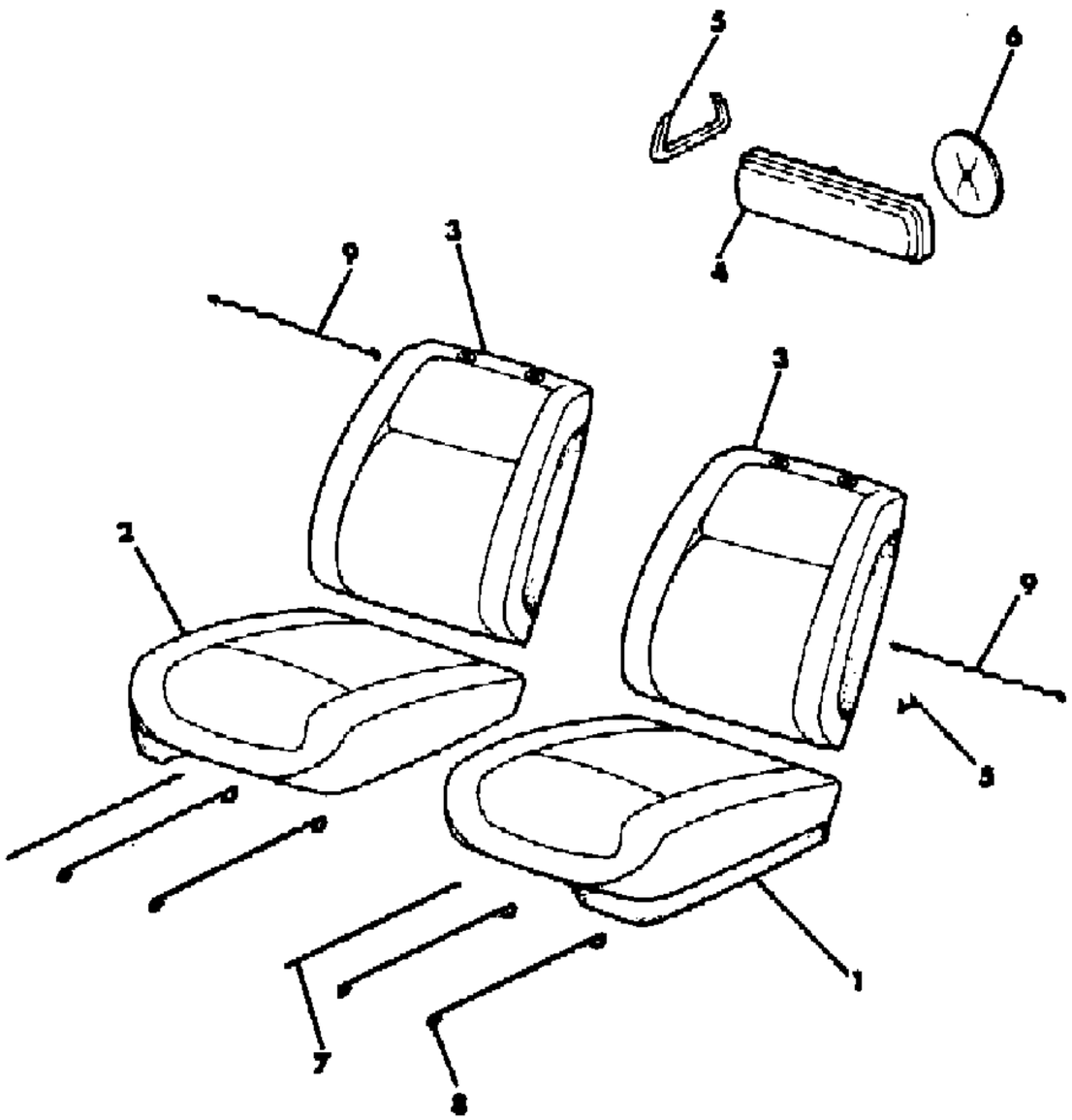

ITEM	PART NUMBER	QTY	BODY	MODEL	DESCRIPTION
	5500 5169	AR			Nutmeg, 1984-86
5	J436 3256	AR			RING
6	J400 5214	AR			RETAINER
7					WIRE
	J096 8305	1			1981
8					WIRE
	J096 9187	2			15"
	J545 2230	2			17.5"
9	J362 1468	2			WIRE

MODEL CODES

16=Cherokee 2 Dr.(1981-83)
17=Cherokee 2 Dr.(1981-83)
73=Cherokee 2WD-2 Dr.(1984-86)
74=Cherokee 2WD-4 Dr.(1984-86)
18=Cherokee 4 Dr.(1981-83)
77=Cherokee 4WD-2 Dr.(1984-86)
78=Cherokee 4WD-4 Dr.(1984-86)
85=CJ-5 (1981-83)
86=CJ-6(1981)
87=CJ-7(1981-86)
88=CJ-8, Scrambler(1981-86)
64=Comanche 2WD-6 Ft. Box(1986)
66=Comanche 2WD-7 Ft. Box(1986)
63=Comanche 4WD-6 Ft. Box(1986)
65=Comanche 4WD-7 Ft. Box(1986)
15=Grand Wagoneer 4 Dr.(1984-86)
25=J-10 Truck 7 Ft. Box(1981-84)
26=J10 Truck 8 Ft. Box(1981-86)
27=J-20 Truck 8 Ft. Box(1981-86)
15=Wagoneer 4 Dr.(1981-83)
75=Wagoneer 4WD-4 Dr.(1984-86)

BODY
CJ=CJ-5, CJ-6, CJ-7, CJ-8, Scrambler(1981-86)
MJ=Comanche Pickup(1986)

STYLES
SJ=Wagoneer(1981-83), Grand Wagoneer(1984-86), Cherokee(1981-83), J-10, J-20(1981-86)
XJ=Wagoneer(1984-86), Cherokee(1984-86)

AR = Use as Required - = Non Illustrated Part P.A.R. = Paint as Required

« RETURN TO GROUP INDEX

FRAME AND PAD REAR SEAT WAGON SJ CHEROKEE, SJ WAGONEER
Figure 48-2700

81J48 2700A

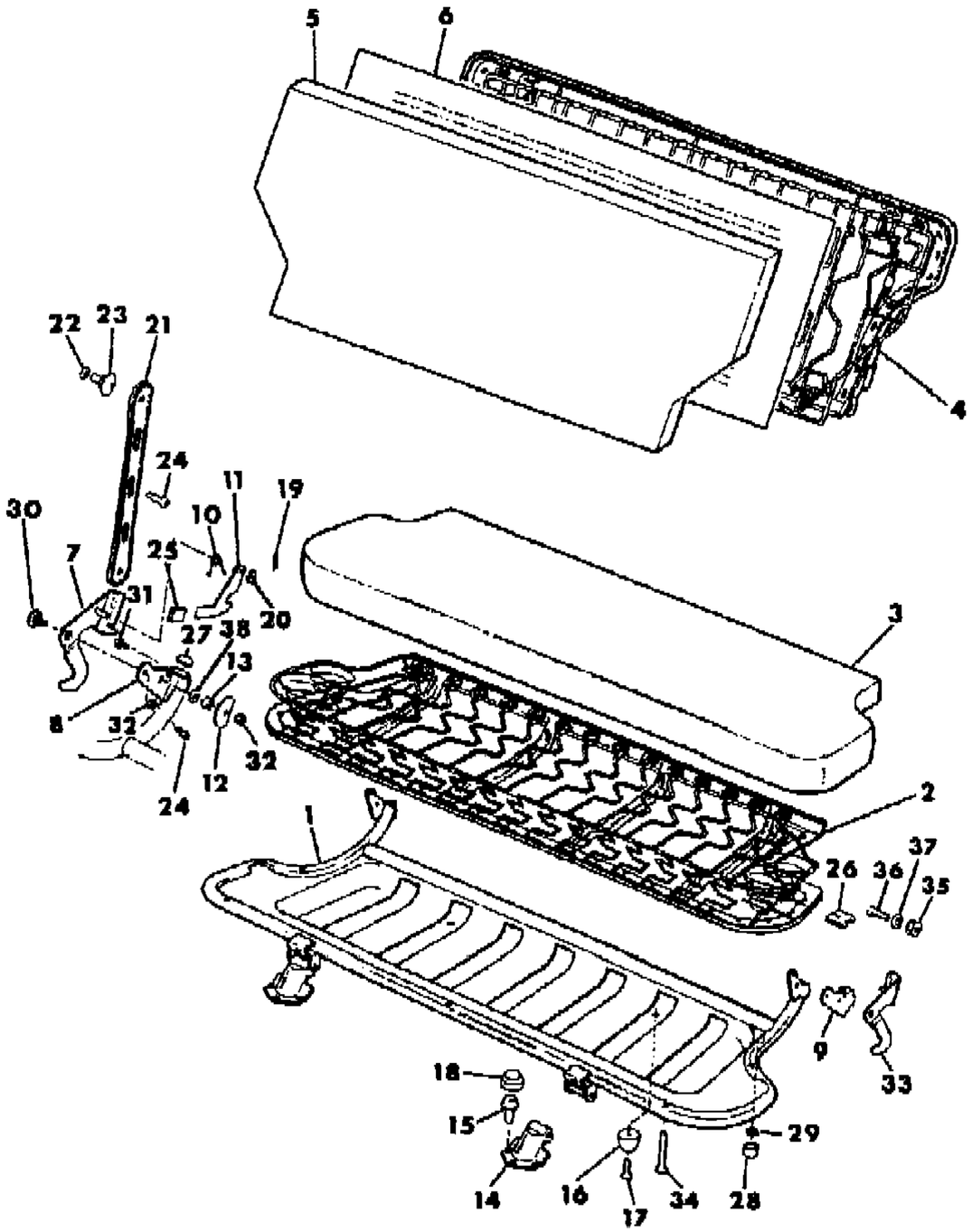

ITEM	PART NUMBER	QTY	BODY	MODEL	DESCRIPTION
1	J545 1749	1			FRAME, Cushion
2	J545 1752	1			SPRING, Cushion
3	J098 8178	1			PAD, Cushion
4					FRAME, Back
	J098 7315	1			1981, Seat Back Has Single Latch
	J575 5501	1			Seat Back Has Double Latch
	J576 2581	1			1982-86, Seat Back Has Single Latch
5	J545 0748	1			PAD, Back
6	J545 6885	1			PROTECTOR
7					HINGE, Seat Back
	J545 9072	1			Right
	J575 5500	1			Left
8	J545 7302	1			HINGE, Latch
9	J545 7301	1			HINGE, Latch
10					SPRING, Lock
	J546 4984	1			Right
	J098 7303	1			Left
11					LATCH, Seat Back
	J098 7301	1			Seat Back Has Single Latch
	J098 7301	1			Right, Seat Back Has Double Latch
	J546 4983	1			Left, Seat Back Has Double Latch
12	J098 1570	1			GUIDE
13	J098 1574	1			SPACER
14	J545 2032	2			BRACKET, Hinge Pivot
15	J400 4455	6			SCREW
16	J096 8071	2			BUMPER
17	J016 3219	2			SCREW
18	J545 1758	2			BUMPER
19	S013 7159	1			PIN, Cotter
	J400 4295	1			PIN, Locking
20	J400 4437	1			WASHER
21					STRAP
	J576 4973	1			Almond
	J575 5003	1			Beige
	J546 5829	1			Blue, 1981
	J576 0097	1			Blue, 1982-86
	J545 6009	1			Charcoal
	J576 6093	1			Garnet
	J576 6091	1			Honey

MODEL CODES
16=Cherokee 2 Dr.(1981-83)
17=Cherokee 2 Dr.(1981-83)
73=Cherokee 2WD-2 Dr.(1984-86)
74=Cherokee 2WD-4 Dr.(1984-86)
18=Cherokee 4 Dr.(1981-83)
77=Cherokee 4WD-2 Dr.(1984-86)
78=Cherokee 4WD-4 Dr.(1984-86)
85=CJ-5 (1981-83)
86=CJ-6(1981)
87=CJ-7(1981-86)
88=CJ-8, Scrambler(1981-86)
64=Comanche 2WD-6 Ft. Box(1986)
66=Comanche 2WD-7 Ft. Box(1986)
63=Comanche 4WD-6 Ft. Box(1986)
65=Comanche 4WD-7 Ft. Box(1986)
15=Grand Wagoneer 4 Dr.(1984-86)
25=J-10 Truck 7 Ft. Box(1981-84)
26=J10 Truck 8 Ft. Box(1981-86)
27=J-20 Truck 8 Ft. Box(1981-86)
15=Wagoneer 4 Dr.(1981-83)
75=Wagoneer 4WD-4 Dr.(1984-86)

BODY
CJ=CJ-5, CJ-6, CJ-7, CJ-8, Scrambler(1981-86)
MJ=Comanche Pickup(1986)

STYLES
SJ=Wagoneer(1981-83), Grand Wagoneer(1984-86), Cherokee(1981-83), J-10, J-20(1981-86)
XJ=Wagoneer(1984-86), Cherokee(1984-86)

AR = Use as Required - = Non Illustrated Part P.A.R. = Paint as Required

« RETURN TO GROUP INDEX »

FRAME AND PAD REAR SEAT WAGON SJ CHEROKEE, SJ WAGONEER
Figure 48-2700

81J48 2700A

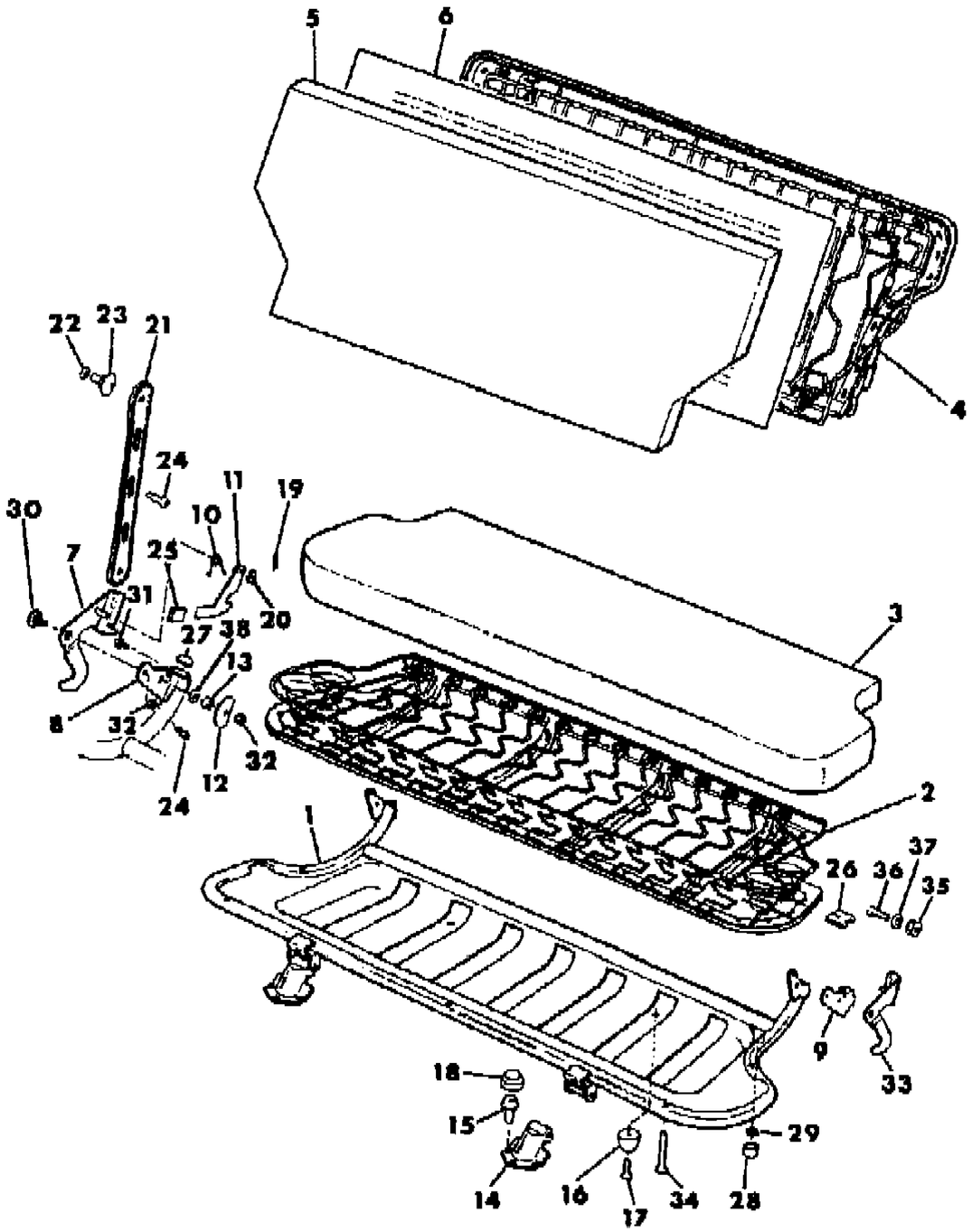

ITEM	PART NUMBER	QTY	BODY	MODEL	DESCRIPTION
	J575 5012	1			Nutmeg
22	J013 8485	1			WASHER
23	J400 5807	1			BOLT
24	J400 6197	2			SCREW
25	J576 2102	1			PROTECTOR
26	J400 6655	5			NUT, U-Type
27	J098 1583	2			CUSHION
28	J081 6278	2			CAP, End
29	J012 0388	2			WASHER
30	J095 7717	2			BOLT
31	J400 4979	1			SCREW
32	J941 3447	4			NUT
33					HINGE, Latch
	J545 9069	1			Seat Back Has Single Latch
	J575 2997	1			Seat Back Has Double Latch
34	J096 3325	5			SCREW
35	J545 1571	2			SPOOL, Rear Seat Latch ***
36	J545 3506	2			SCREW
37	S012 0390	AR			WASHER, Plain
38	J012 0393	2			WASHER

MODEL CODES

16=Cherokee 2 Dr.(1981-83)
17=Cherokee 2 Dr.(1981-83)
73=Cherokee 2WD-2 Dr.(1984-86)
74=Cherokee 2WD-4 Dr.(1984-86)
18=Cherokee 4 Dr.(1981-83)
77=Cherokee 4WD-2 Dr.(1984-86)
78=Cherokee 4WD-4 Dr.(1984-86)
85=CJ-5 (1981-83)
86=CJ-6(1981)
87=CJ-7(1981-86)
88=CJ-8, Scrambler(1981-86)
64=Comanche 2WD-6 Ft. Box(1986)
66=Comanche 2WD-7 Ft. Box(1986)
63=Comanche 4WD-6 Ft. Box(1986)
65=Comanche 4WD-7 Ft. Box(1986)
15=Grand Wagoneer 4 Dr.(1984-86)
25=J-10 Truck 7 Ft. Box(1981-84)
26=J10 Truck 8 Ft. Box(1981-86)
27=J-20 Truck 8 Ft. Box(1981-86)
15=Wagoneer 4 Dr.(1981-83)
75=Wagoneer 4WD-4 Dr.(1984-86)

BODY
CJ=CJ-5, CJ-6, CJ-7, CJ-8, Scrambler(1981-86)
MJ=Comanche Pickup(1986)

STYLES
SJ=Wagoneer(1981-83), Grand Wagoneer(1984-86), Cherokee(1981-83), J-10, J-20(1981-86)
XJ=Wagoneer(1984-86), Cherokee(1984-86)

AR = Use as Required - = Non Illustrated Part P.A.R. = Paint as Required

« RETURN TO GROUP INDEX

TRACKS, WITHOUT POWER SEATS FRONT BENCH SEAT SJ CHEROKEE, SJ WAGONEER, J10, J20
Figure 48-2800

81J 048 2800

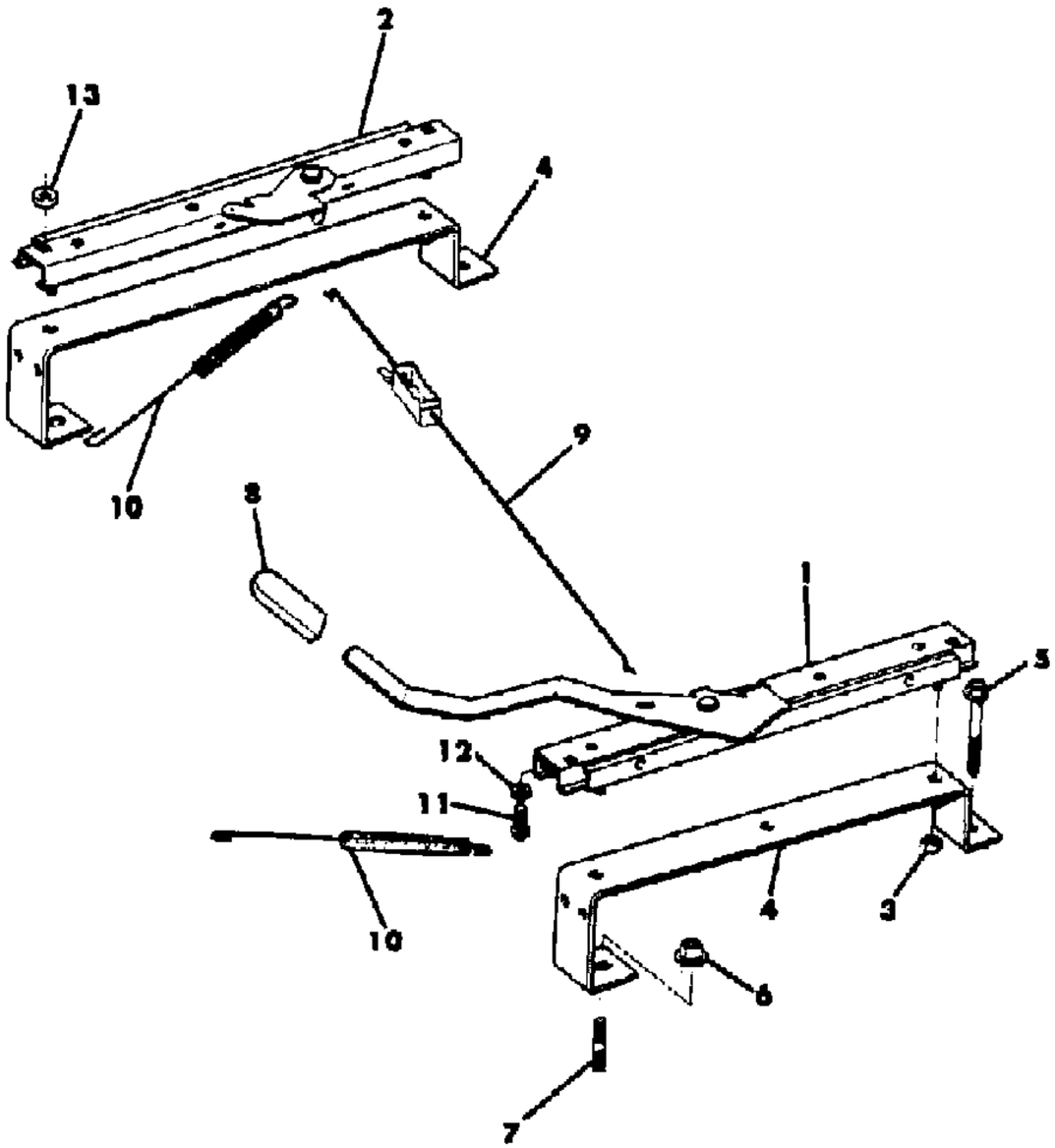

ITEM	PART NUMBER	QTY	BODY	MODEL	DESCRIPTION
1					TRACK, Seat
	J098 7420	1			Right Hand Drive
	J546 1247	1			Left Hand Drive
2	J098 7421	1			TRACK, Seat
3	J027 1187	4			NUT
4	J098 7337	2			BRACKET
5					BOLT
	J400 4859	2			1.625"
	J400 4860	2			2.750"
6	J400 4322	2			NUT
7					STUD
	J400 4912	2			Right Hand Drive
	J400 4912	2			Left Hand Drive
8	J546 1281	1			HANDLE, Adjusting
9	J545 0629	1			WIRE, Seat Adjuster
10	J096 1059	2			SPRING, Adjuster
11					SCREW
	J400 4926	4			1.00"
	J400 4927	4			1.50"
12	J096 1127	4			WASHER
13	J575 0574	4			SPACER

MODEL CODES
16=Cherokee 2 Dr.(1981-83)
17=Cherokee 2 Dr.(1981-83)
73=Cherokee 2WD-2 Dr.(1984-86)
74=Cherokee 2WD-4 Dr.(1984-86)
18=Cherokee 4 Dr.(1981-83)
77=Cherokee 4WD-2 Dr.(1984-86)
78=Cherokee 4WD-4 Dr.(1984-86)
85=CJ-5 (1981-83)
86=CJ-6(1981)
87=CJ-7(1981-86)
88=CJ-8, Scrambler(1981-86)
64=Comanche 2WD-6 Ft. Box(1986)
66=Comanche 2WD-7 Ft. Box(1986)
63=Comanche 4WD-6 Ft. Box(1986)
65=Comanche 4WD-7 Ft. Box(1986)
15=Grand Wagoneer 4 Dr.(1984-86)
25=J-10 Truck 7 Ft. Box(1981-84)
26=J10 Truck 8 Ft. Box(1981-86)
27=J-20 Truck 8 Ft. Box(1981-86)
15=Wagoneer 4 Dr.(1981-83)
75=Wagoneer 4WD-4 Dr.(1984-86)

BODY
CJ=CJ-5, CJ-6, CJ-7, CJ-8, Scrambler(1981-86)
MJ=Comanche Pickup(1986)

STYLES
SJ=Wagoneer(1981-83), Grand Wagoneer(1984-86), Cherokee(1981-83), J-10, J-20(1981-86)
XJ=Wagoneer(1984-86), Cherokee(1984-86)

AR = Use as Required - = Non Illustrated Part P.A.R. = Paint as Required

« RETURN TO GROUP INDEX

TRACKS, WITHOUT POWER SEATS FRONT BUCKET SEAT SJ CHEROKEE, SJ WAGONEER, J10, J20
Figure 48-2900

81J 048 2900

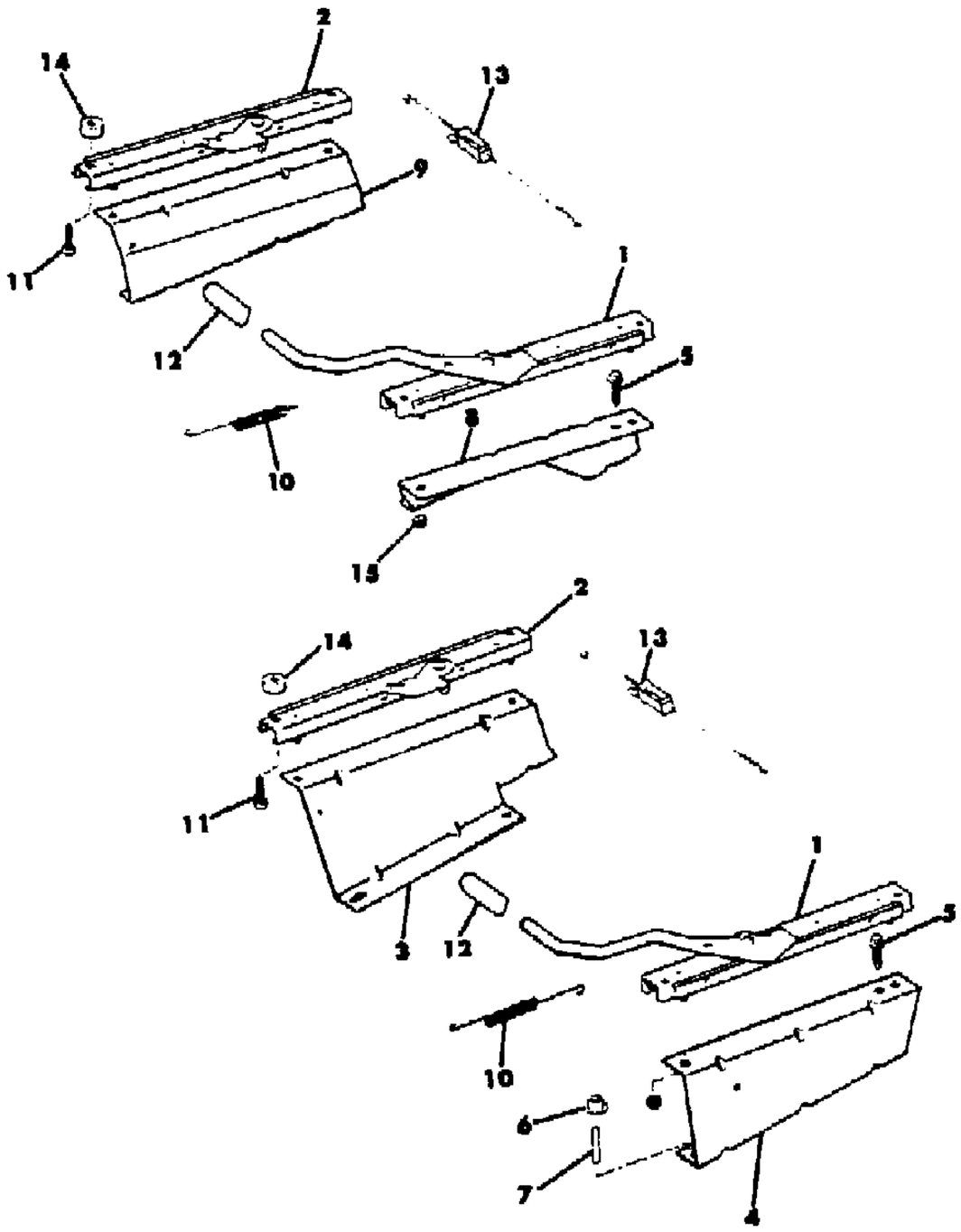

ITEM	PART NUMBER	QTY	BODY	MODEL	DESCRIPTION
1	J546 1247	2			TRACK, Seat
2	J098 7421	2			TRACK, Seat
3	J575 1109	1			SUPPORT, Cushion
4	J545 1761	1			SUPPORT, Cushion
5					BOLT
	J400 4859	2			1.62"
	J400 4860	2			2.75"
6	J400 4322	6			NUT
7	J400 4912	6			STUD
8					SUPPORT, Cushion
	J545 1764	1		16,17	
	J545 1983	1		15,18	
	J545 1983	1		25,26,2	
9					SUPPORT, Cushion
	J545 1765	1		16,17	
	J545 2501	1		15,18	
	J545 2501	1		25,26,2	
10	J096 1059	2			SPRING, Adjuster
11	J400 4926	8			SCREW
12	J546 1281	2			HANDLE, Adjusting
13	J545 7703	2			WIRE, Seat Adjuster
14	J545 5277	4			SPACER
15	J027 1187	8			NUT

MODEL CODES

16=Cherokee 2 Dr.(1981-83)
17=Cherokee 2 Dr.(1981-83)
73=Cherokee 2WD-2 Dr.(1984-86)
74=Cherokee 2WD-4 Dr.(1984-86)
18=Cherokee 4 Dr.(1981-83)
77=Cherokee 4WD-2 Dr.(1984-86)
78=Cherokee 4WD-4 Dr.(1984-86)
85=CJ-5 (1981-83)
86=CJ-6(1981)
87=CJ-7(1981-86)
88=CJ-8, Scrambler(1981-86)
64=Comanche 2WD-6 Ft. Box(1986)
66=Comanche 2WD-7 Ft. Box(1986)
63=Comanche 4WD-6 Ft. Box(1986)
65=Comanche 4WD-7 Ft. Box(1986)
15=Grand Wagoneer 4 Dr.(1984-86)
25=J-10 Truck 7 Ft. Box(1981-84)
26=J10 Truck 8 Ft. Box(1981-86)
27=J-20 Truck 8 Ft. Box(1981-86)
15=Wagoneer 4 Dr.(1981-83)
75=Wagoneer 4WD-4 Dr.(1984-86)

BODY
CJ=CJ-5, CJ-6, CJ-7, CJ-8, Scrambler(1981-86)
MJ=Comanche Pickup(1986)

STYLES
SJ=Wagoneer(1981-83), Grand Wagoneer(1984-86), Cherokee(1981-83), J-10, J-20(1981-86)
XJ=Wagoneer(1984-86), Cherokee(1984-86)

AR = Use as Required - = Non Illustrated Part P.A.R. = Paint as Required

« RETURN TO GROUP INDEX

TRACKS, WITH POWER SEATS FRONT BUCKET SEAT SJ CHEROKEE, SJ WAGONEER
Figure 48-3000

81J 048 3000

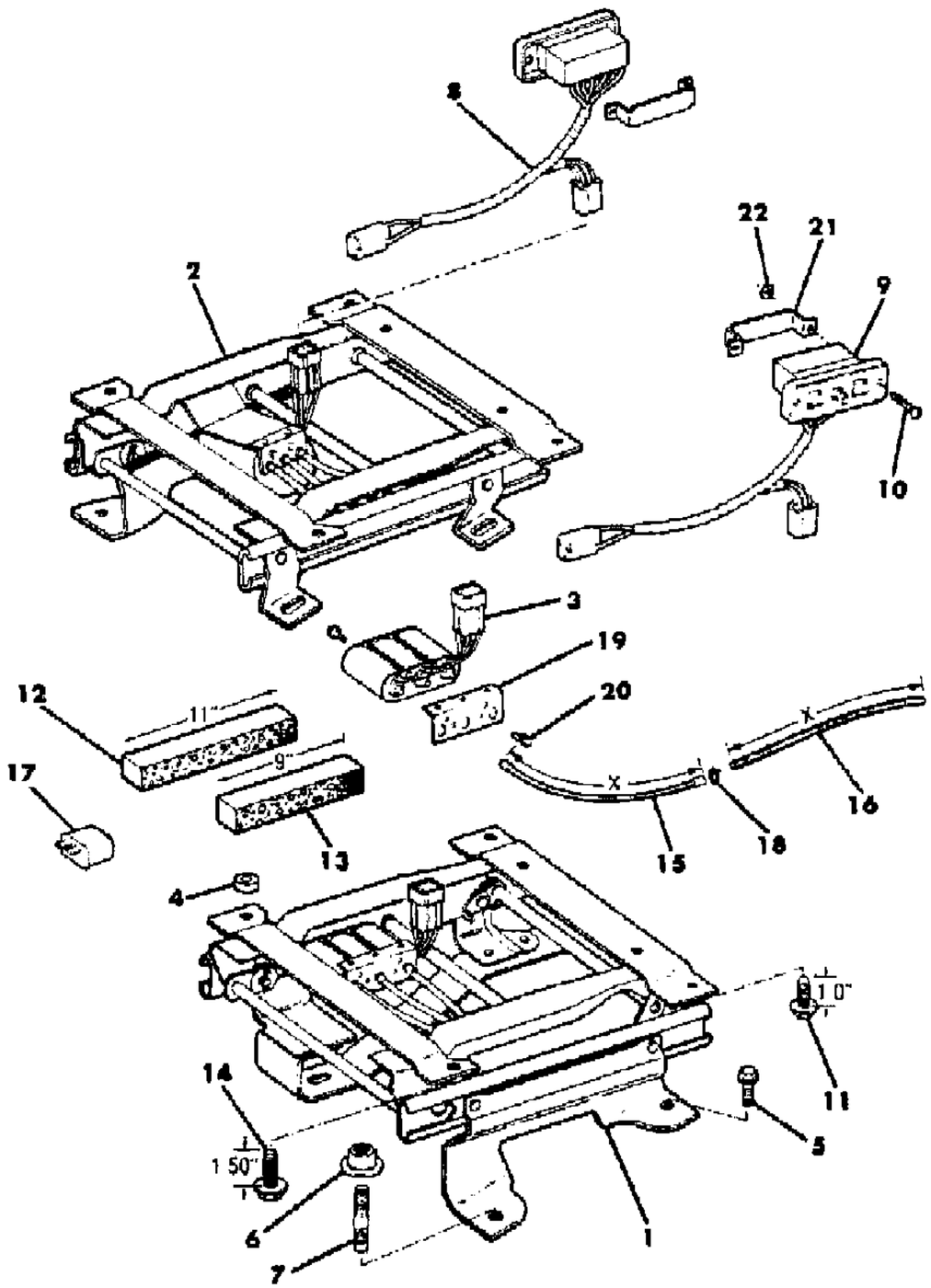

ITEM	PART NUMBER	QTY	BODY	MODEL	DESCRIPTION
1	J575 1964	1			TRACK, Power Seat
2	J575 1965	1			TRACK, Power Seat
3	J813 1636	2			MOTOR ASSEMBLY, Power Seat ***
4	J066 9842	12			SPACER
5	J400 4860	2			BOLT
6	J400 4322	6			NUT
7	J400 4912	6			STUD
8					SWITCH ASSEMBLY, Power Seat ***
	J575 1966	1			1981
	J576 1772	1			1982-86
9					SWITCH ASSEMBLY, Power Seat ***
	J575 1966	1			1981
	J576 1773	1			1982-86
10	J320 9830	8			SCREW
11	J400 4926	4			SCREW
12	J575 5304	2			PAD, Deadener
13	J575 5303	2			PAD, Deadener
14	J400 4927	4			SCREW
15					TUBE ASSEMBLY, Cable ***
	8350 1362	2			6.25"
	8350 1361	2			6.69"
	8350 1365	2			7.88"
	8350 1363	2			8.38"
	J813 3263	2			8.62"
	8350 1364	2			8.88"
16					CABLE, Power Seat
	8350 1354	2			7.25"
	8350 1352	2			7.75"
	8350 1359	2			9.00"
	8351 0189	2			9.44"
	8350 1353	2			9.75"
	8350 1358	2			10.0"
17	J323 4524	1			BREAKER, Circuit ***
18	S027 2844	6			CLAMP
19	J813 2663	2			BRACKET
20	J812 0054	8			SCREW
21					STRAP
	J575 2674	2			1981
22					NUT

MODEL CODES

16=Cherokee 2 Dr.(1981-83)
17=Cherokee 2 Dr.(1981-83)
73=Cherokee 2WD-2 Dr.(1984-86)
74=Cherokee 2WD-4 Dr.(1984-86)
18=Cherokee 4 Dr.(1981-83)
77=Cherokee 4WD-2 Dr.(1984-86)
78=Cherokee 4WD-4 Dr.(1984-86)
85=CJ-5 (1981-83)
86=CJ-6(1981)
87=CJ-7(1981-86)
88=CJ-8, Scrambler(1981-86)
64=Comanche 2WD-6 Ft. Box(1986)
66=Comanche 2WD-7 Ft. Box(1986)
63=Comanche 4WD-6 Ft. Box(1986)
65=Comanche 4WD-7 Ft. Box(1986)
15=Grand Wagoneer 4 Dr.(1984-86)
25=J-10 Truck 7 Ft. Box(1981-84)
26=J10 Truck 8 Ft. Box(1981-86)
27=J-20 Truck 8 Ft. Box(1981-86)
15=Wagoneer 4 Dr.(1981-83)
75=Wagoneer 4WD-4 Dr.(1984-86)

BODY
CJ=CJ-5, CJ-6, CJ-7, CJ-8, Scrambler(1981-86)
MJ=Comanche Pickup(1986)

STYLES
SJ=Wagoneer(1981-83), Grand Wagoneer(1984-86), Cherokee(1981-83), J-10, J-20(1981-86)
XJ=Wagoneer(1984-86), Cherokee(1984-86)

AR = Use as Required - = Non Illustrated Part P.A.R. = Paint as Required

« RETURN TO GROUP INDEX »

TRACKS, WITH POWER SEATS FRONT BUCKET SEAT SJ CHEROKEE, SJ WAGONEER
Figure 48-3000

81J 048 3000

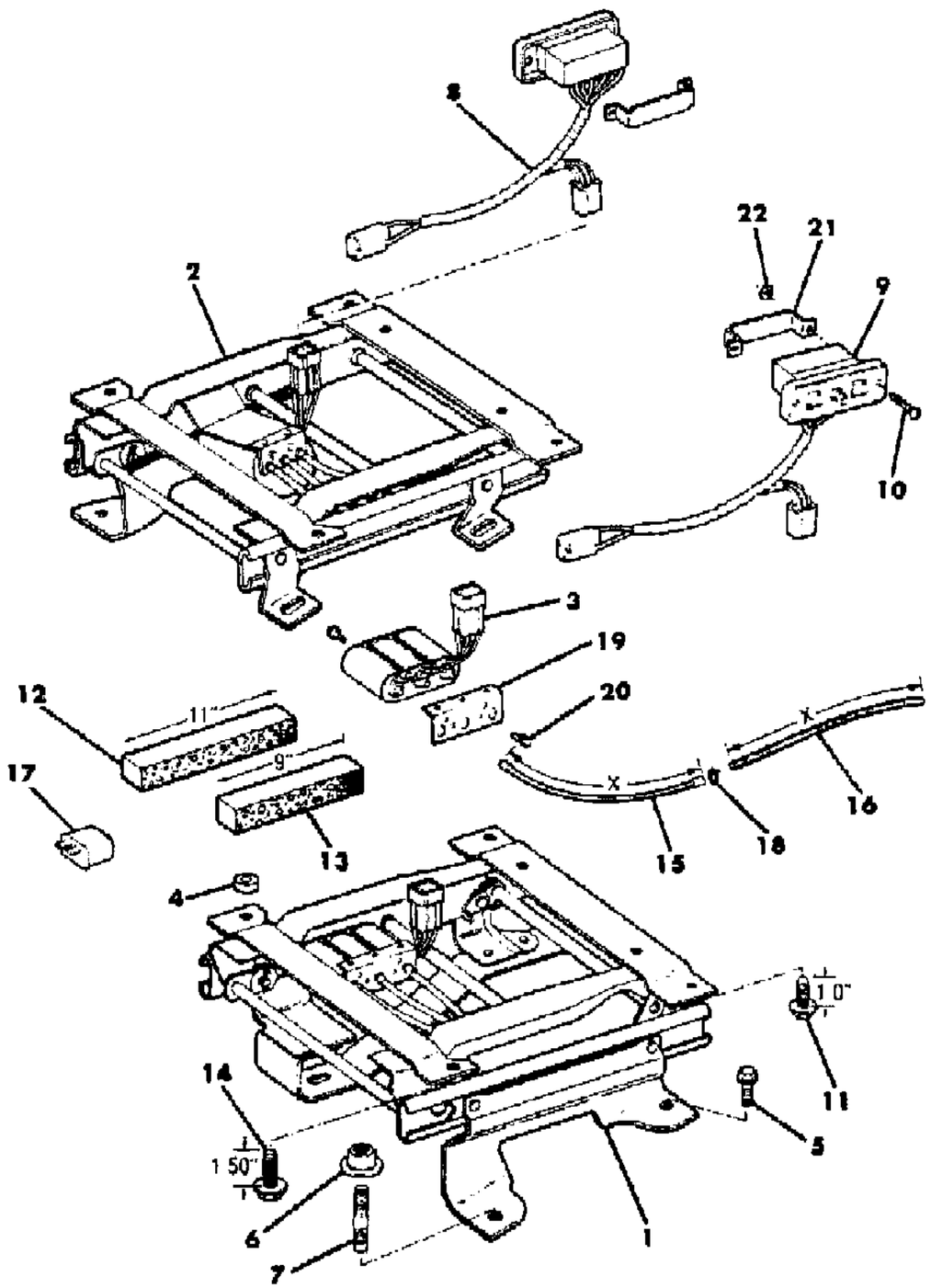

ITEM	PART NUMBER	QTY	BODY	MODEL	DESCRIPTION
	J400 6685	4			1981

MODEL CODES

16=Cherokee 2 Dr.(1981-83)	78=Cherokee 4WD-4 Dr.(1984-86)	64=Comanche 2WD-6 Ft. Box(1986)	25=J-10 Truck 7 Ft. Box(1981-84)
17=Cherokee 2 Dr.(1981-83)	85=CJ-5 (1981-83)	66=Comanche 2WD-7 Ft. Box(1986)	26=J10 Truck 8 Ft. Box(1981-86)
73=Cherokee 2WD-2 Dr.(1984-86)	86=CJ-6(1981)	63=Comanche 4WD-6 Ft. Box(1986)	27=J-20 Truck 8 Ft. Box(1981-86)
74=Cherokee 2WD-4 Dr.(1984-86)	87=CJ-7(1981-86)	65=Comanche 4WD-7 Ft. Box(1986)	15=Wagoneer 4 Dr.(1981-83)
18=Cherokee 4 Dr.(1981-83)	88=CJ-8, Scrambler(1981-86)	15=Grand Wagoneer 4 Dr.(1984-86)	75=Wagoneer 4WD-4 Dr.(1984-86)
77=Cherokee 4WD-2 Dr.(1984-86)			

BODY
CJ=CJ-5, CJ-6, CJ-7, CJ-8, Scrambler(1981-86)
MJ=Comanche Pickup(1986)

STYLES
SJ=Wagoneer(1981-83), Grand Wagoneer(1984-86), Cherokee(1981-83), J-10, J-20(1981-86)
XJ=Wagoneer(1984-86), Cherokee(1984-86)

AR = Use as Required - = Non Illustrated Part P.A.R. = Paint as Required

« RETURN TO GROUP INDEX

SEATBELTS, FRONT AND REAR SJ CHEROKEE, SJ WAGONEER, J10, J20
Figure 48-3100

81J 048 3100

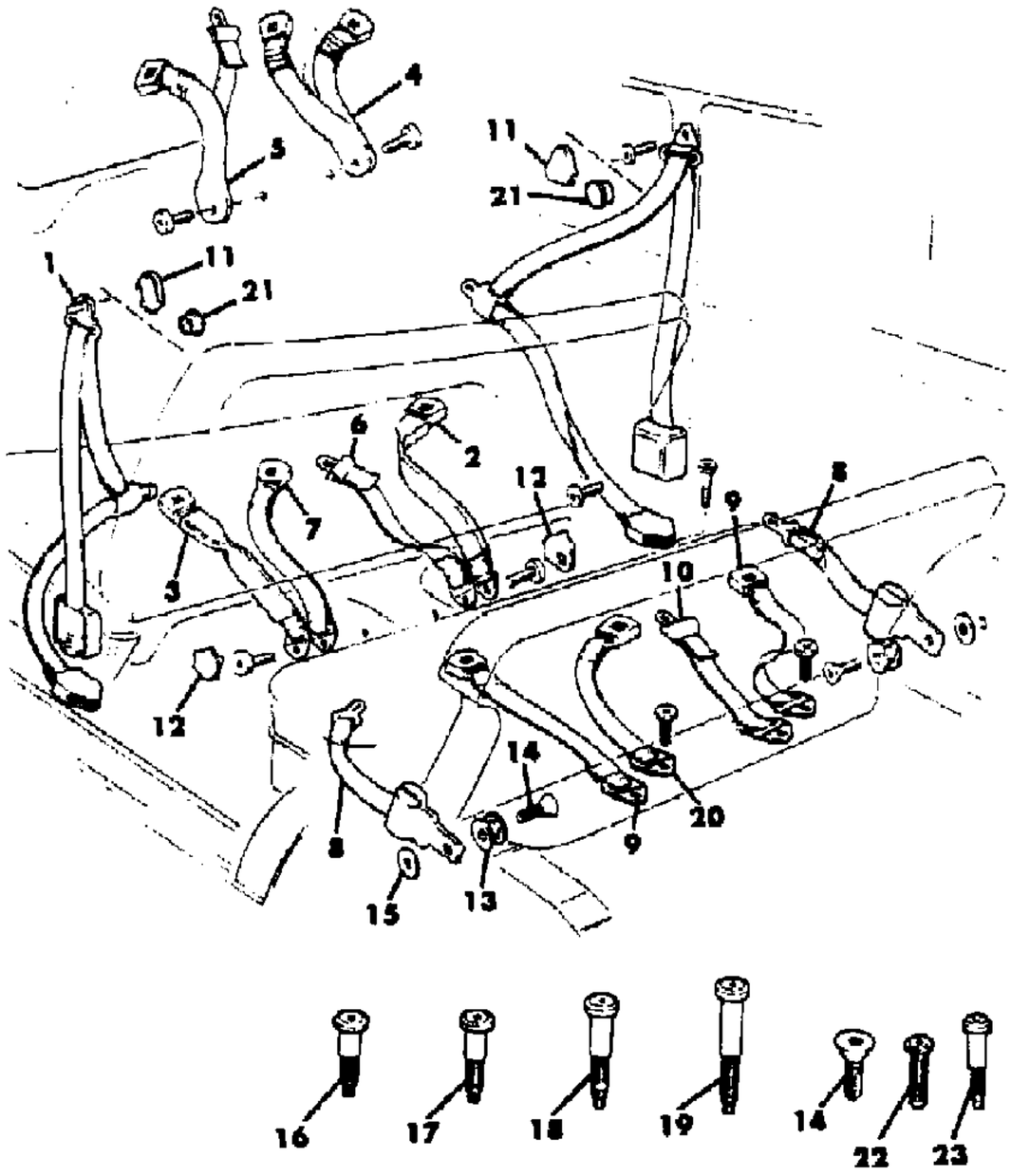

ITEM	PART NUMBER	QTY	BODY	MODEL	DESCRIPTION
1					SEATBELT ***
	J576 5051	2			Almond
	J575 5219	2			Beige
					Black
	J575 4533	2			
	J575 5606	1			Right, Economic Commission of Europe
	J575 5607	1			Left, Economic Commission of Europe
	J575 4534	2			Medium Blue
	J576 0476	2			Slate Blue
	J576 6723	2			Garnet
	J576 6722	2			Honey
	J575 5218	2			Nutmeg
2					SEATBELT ***
					With Bucket Seats
	J576 5054	1			Almond
	J575 5208	1		15,16,1	Beige
	J575 5215	1		25,26,2	Beige
	J575 4658	1		15,16,1	Black
	J575 4666	1		25,26,2	Black
	J575 4660	1		15,16,1	Medium Blue
	J575 4668	1		25,26,2	Medium Blue
	J576 0484	1		15,16,1	Slate Blue
	J576 0482	1		25,26,2	Slate Blue
	J575 5206	1		15,16,1	Nutmeg
	J575 5214	1		25,26,2	Nutmeg
					With Full Bench Seat
	J576 5052	1			Almond
	J575 5204	1			Beige
					Black
	J575 4650	1			
	J575 5615	1		15,16,1	Economic Commission of Europe
	J575 4652	1			Medium Blue
	J576 0494	1			Slate Blue
	J576 6725	1			Honey ‘
	J575 5202	1			Nutmeg
3					SEATBELT ***
					With Bucket Seats
	J576 5055	1		15,16,1	Almond
	J575 5143	1		25,26,2	Almond

MODEL CODES

16=Cherokee 2 Dr.(1981-83)	78=Cherokee 4WD-4 Dr.(1984-86)	64=Comanche 2WD-6 Ft. Box(1986)	25=J-10 Truck 7 Ft. Box(1981-84)
17=Cherokee 2 Dr.(1981-83)	85=CJ-5 (1981-83)	66=Comanche 2WD-7 Ft. Box(1986)	26=J10 Truck 8 Ft. Box(1981-86)
73=Cherokee 2WD-2 Dr.(1984-86)	86=CJ-6(1981)	63=Comanche 4WD-6 Ft. Box(1986)	27=J-20 Truck 8 Ft. Box(1981-86)
74=Cherokee 2WD-4 Dr.(1984-86)	87=CJ-7(1981-86)	65=Comanche 4WD-7 Ft. Box(1986)	15=Wagoneer 4 Dr.(1981-83)
18=Cherokee 4 Dr.(1981-83)	88=CJ-8, Scrambler(1981-86)	15=Grand Wagoneer 4 Dr.(1984-86)	75=Wagoneer 4WD-4 Dr.(1984-86)
77=Cherokee 4WD-2 Dr.(1984-86)			

BODY
CJ=CJ-5, CJ-6, CJ-7, CJ-8, Scrambler(1981-86)
MJ=Comanche Pickup(1986)

STYLES
SJ=Wagoneer(1981-83), Grand Wagoneer(1984-86), Cherokee(1981-83), J-10, J-20(1981-86)
XJ=Wagoneer(1984-86), Cherokee(1984-86)

AR = Use as Required - = Non Illustrated Part P.A.R. = Paint as Required

« RETURN TO GROUP INDEX »

81J 048 3100

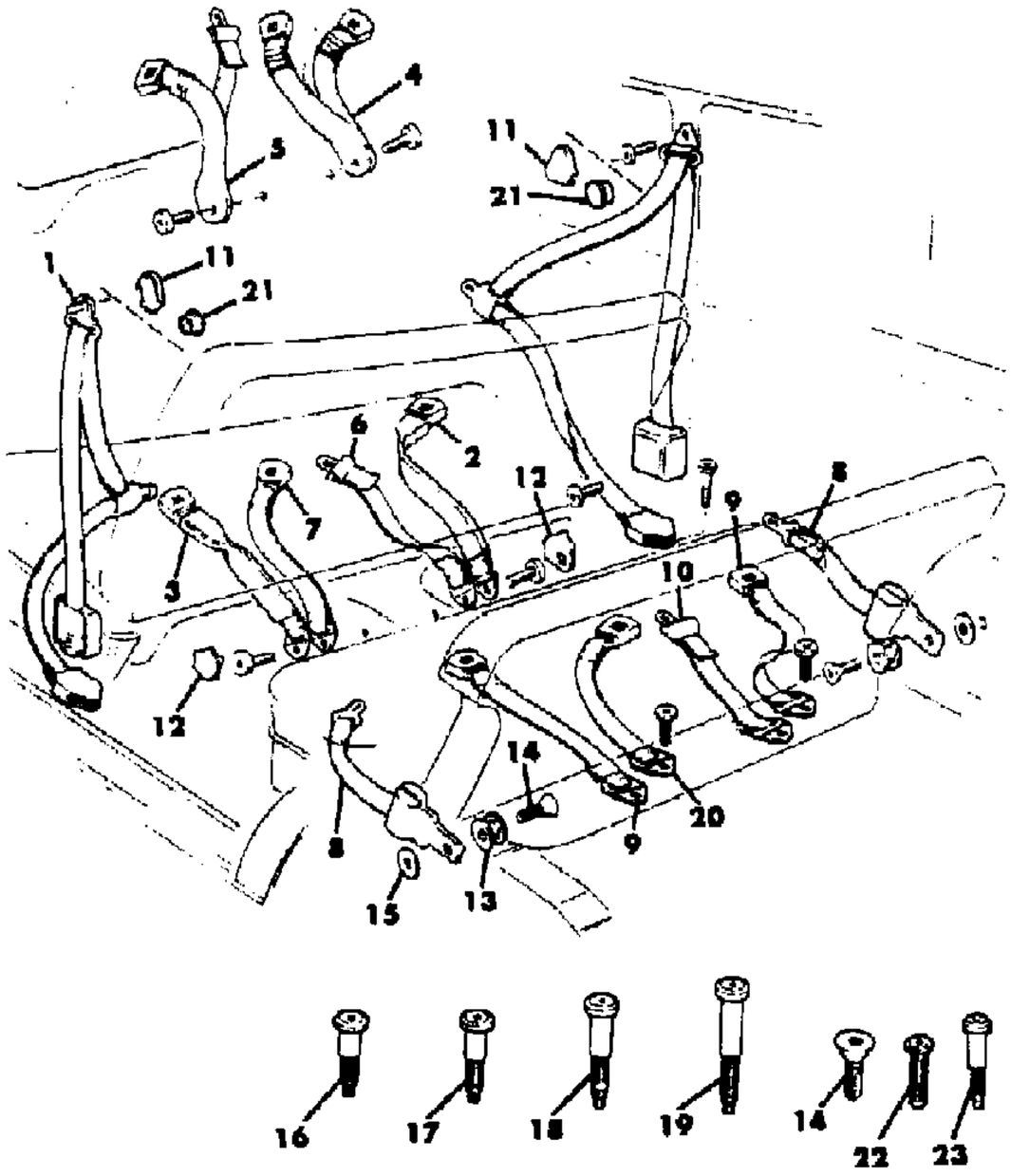

ITEM	PART NUMBER	QTY	BODY	MODEL	DESCRIPTION
	J575 5209	1		15,16,1	Beige
	J575 5217	1		25,26,2	Beige
					Black
	J575 4657	1		15,16,1	
	J575 4665	1		25,26,2	1981-83
	J576 5135	1		25,25,2	1984-86
	J575 4659	1		15,16,1	Medium Blue
	J575 4667	1		25,26,2	Medium Blue
	J576 0485	1		15,16,1	Slate Blue
	J576 0478	1		25,26,2	Slate Blue
	J575 5207	1		15,16,1	Nutmeg, 1981-84
	J575 5216	1		25,26,2	Nutmeg, 1981-83
	J576 5139	1		25,26,2	Nutmeg, 1984-86
					With Full Bench Seat
	J576 5053	1			Almond
	J575 5205	1			Beige
					Black
	J575 4649	1			
	J575 5615	1		15,16,1	Economic Commission of Europe
	J575 4651	1			Medium Blue
	J576 0495	1			Slate Blue
	J576 6721	1			Honey
	J575 5203	1			Nutmeg
4					SEATBELT ***
	J576 6507	1			Garnet, 1985-86
	J576 6505	1			Honey, 1985-86
	5500 9248	1			Nutmeg, 1985-86
5					SEATBELT ***
	J576 6506	1			Garnet, 1985-86
	J576 6504	1			Honey, 1985-86
	5500 9247	1			Nutmeg, 1985-86
6					SEATBELT ***
	J576 5059	1			Almond
	J575 5221	1			Beige
	J575 4587	1			Black
	J575 4588	1			Medium Blue
	J576 0488	1			Slate Blue
	J576 6728	1			Honey
	J575 5220	1			Nutmeg

MODEL CODES

16=Cherokee 2 Dr.(1981-83)	78=Cherokee 4WD-4 Dr.(1984-86)	64=Comanche 2WD-6 Ft. Box(1986)	25=J-10 Truck 7 Ft. Box(1981-84)
17=Cherokee 2 Dr.(1981-83)	85=CJ-5 (1981-83)	66=Comanche 2WD-7 Ft. Box(1986)	26=J10 Truck 8 Ft. Box(1981-86)
73=Cherokee 2WD-2 Dr.(1984-86)	86=CJ-6(1981)	63=Comanche 4WD-6 Ft. Box(1986)	27=J-20 Truck 8 Ft. Box(1981-86)
74=Cherokee 2WD-4 Dr.(1984-86)	87=CJ-7(1981-86)	65=Comanche 4WD-7 Ft. Box(1986)	15=Wagoneer 4 Dr.(1981-83)
18=Cherokee 4 Dr.(1981-83)	88=CJ-8, Scrambler(1981-86)	15=Grand Wagoneer 4 Dr.(1984-86)	75=Wagoneer 4WD-4 Dr.(1984-86)
77=Cherokee 4WD-2 Dr.(1984-86)			

BODY
CJ=CJ-5, CJ-6, CJ-7, CJ-8, Scrambler(1981-86)
MJ=Comanche Pickup(1986)

STYLES
SJ=Wagoneer(1981-83), Grand Wagoneer(1984-86), Cherokee(1981-83), J-10, J-20(1981-86)
XJ=Wagoneer(1984-86), Cherokee(1984-86)

AR = Use as Required - = Non Illustrated Part P.A.R. = Paint as Required

81J 048 3100

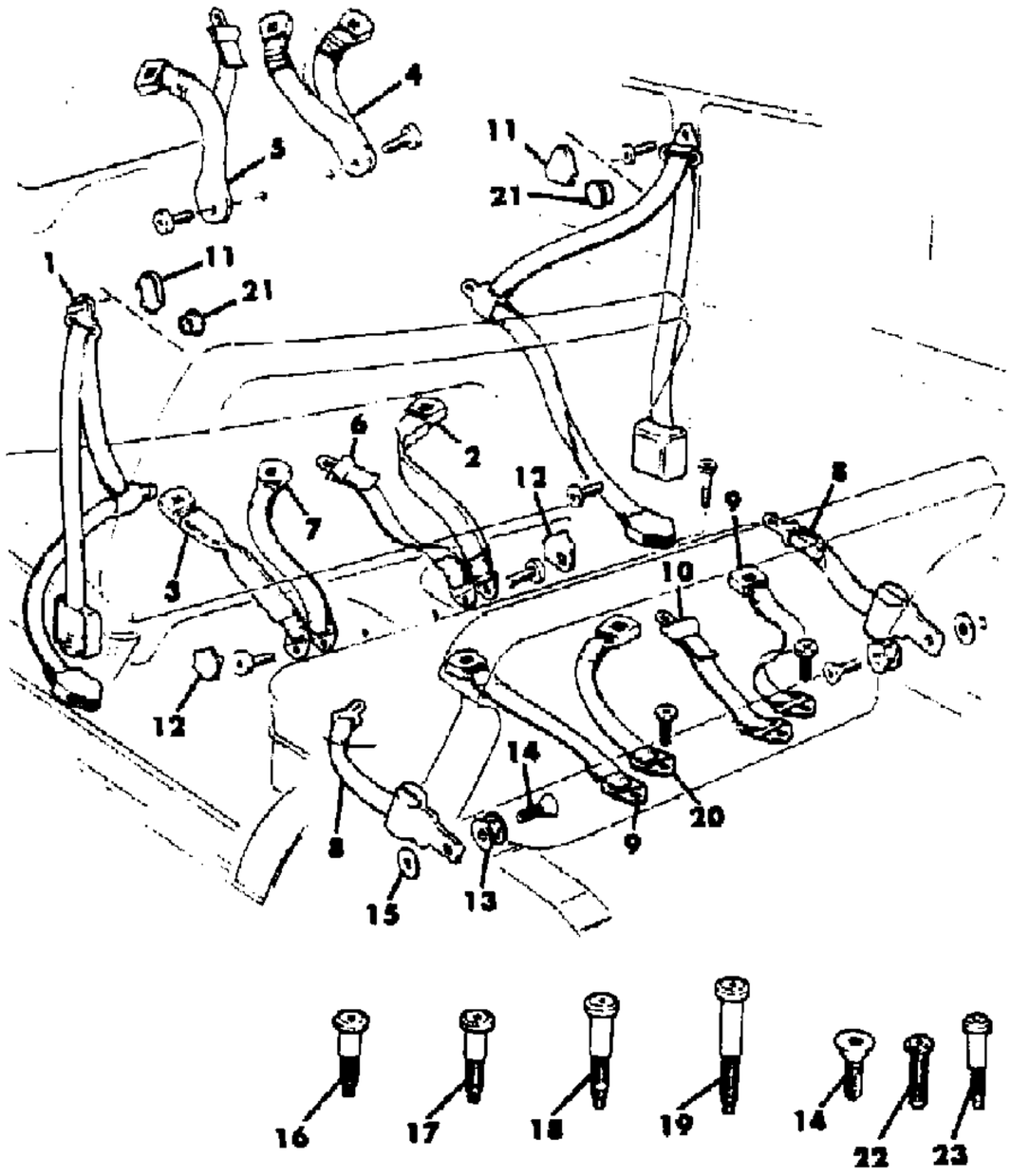

ITEM	PART NUMBER	QTY	BODY	MODEL	DESCRIPTION
7					SEATBELT ***
	J576 5058	1			Almond
	J575 5211	1			Beige
	J575 4673	1			Black
	J575 4674	1			Medium Blue
	J576 0489	1			Slate Blue
	J576 6727	1			Honey
	J575 5210	1			Nutmeg
8					SEATBELT ***
	J576 5060	2			Almond
	J575 5223	2			Beige
					Black
	J575 4591	2			
	J575 5610	2			Economic Commission of Europe
	J575 4592	2			Medium Blue
	J576 0491	2			Slate Blue
	J576 6731	2			Garnet
	J576 6734	2			Honey
	J575 5222	2			Nutmeg
9					SEATBELT ***
	J576 5061	2			Almond
	J575 5213	2			Beige
					Black
	J575 4677	2			
	J575 5609	2			Economic Commission of Europe
	J575 4678	2			Medium Blue
	J576 0492	2			Slate Blue
	J576 6730	2			Garnet
	J576 6733	2			Honey
	J575 5212	2			Nutmeg
10					SEATBELT ***
	J576 5059	1			Almond
	J575 5221	1			Beige
					Black
	J575 4587	1			
	J575 5607	1			Economic Commission of Europe
	J575 4588	1			Medium Blue
	J576 0488	1			Slate Blue
	J576 6736	1			Garnet

MODEL CODES

16=Cherokee 2 Dr.(1981-83)	78=Cherokee 4WD-4 Dr.(1984-86)	64=Comanche 2WD-6 Ft. Box(1986)	25=J-10 Truck 7 Ft. Box(1981-84)
17=Cherokee 2 Dr.(1981-83)	85=CJ-5 (1981-83)	66=Comanche 2WD-7 Ft. Box(1986)	26=J10 Truck 8 Ft. Box(1981-86)
73=Cherokee 2WD-2 Dr.(1984-86)	86=CJ-6(1981)	63=Comanche 4WD-6 Ft. Box(1986)	27=J-20 Truck 8 Ft. Box(1981-86)
74=Cherokee 2WD-4 Dr.(1984-86)	87=CJ-7(1981-86)	65=Comanche 4WD-7 Ft. Box(1986)	15=Wagoneer 4 Dr.(1981-83)
18=Cherokee 4 Dr.(1981-83)	88=CJ-8, Scrambler(1981-86)	15=Grand Wagoneer 4 Dr.(1984-86)	75=Wagoneer 4WD-4 Dr.(1984-86)
77=Cherokee 4WD-2 Dr.(1984-86)			

BODY
CJ=CJ-5, CJ-6, CJ-7, CJ-8, Scrambler(1981-86)
MJ=Comanche Pickup(1986)

STYLES
SJ=Wagoneer(1981-83), Grand Wagoneer(1984-86), Cherokee(1981-83), J-10, J-20(1981-86)
XJ=Wagoneer(1984-86), Cherokee(1984-86)

AR = Use as Required - = Non Illustrated Part P.A.R. = Paint as Required

81J 048 3100

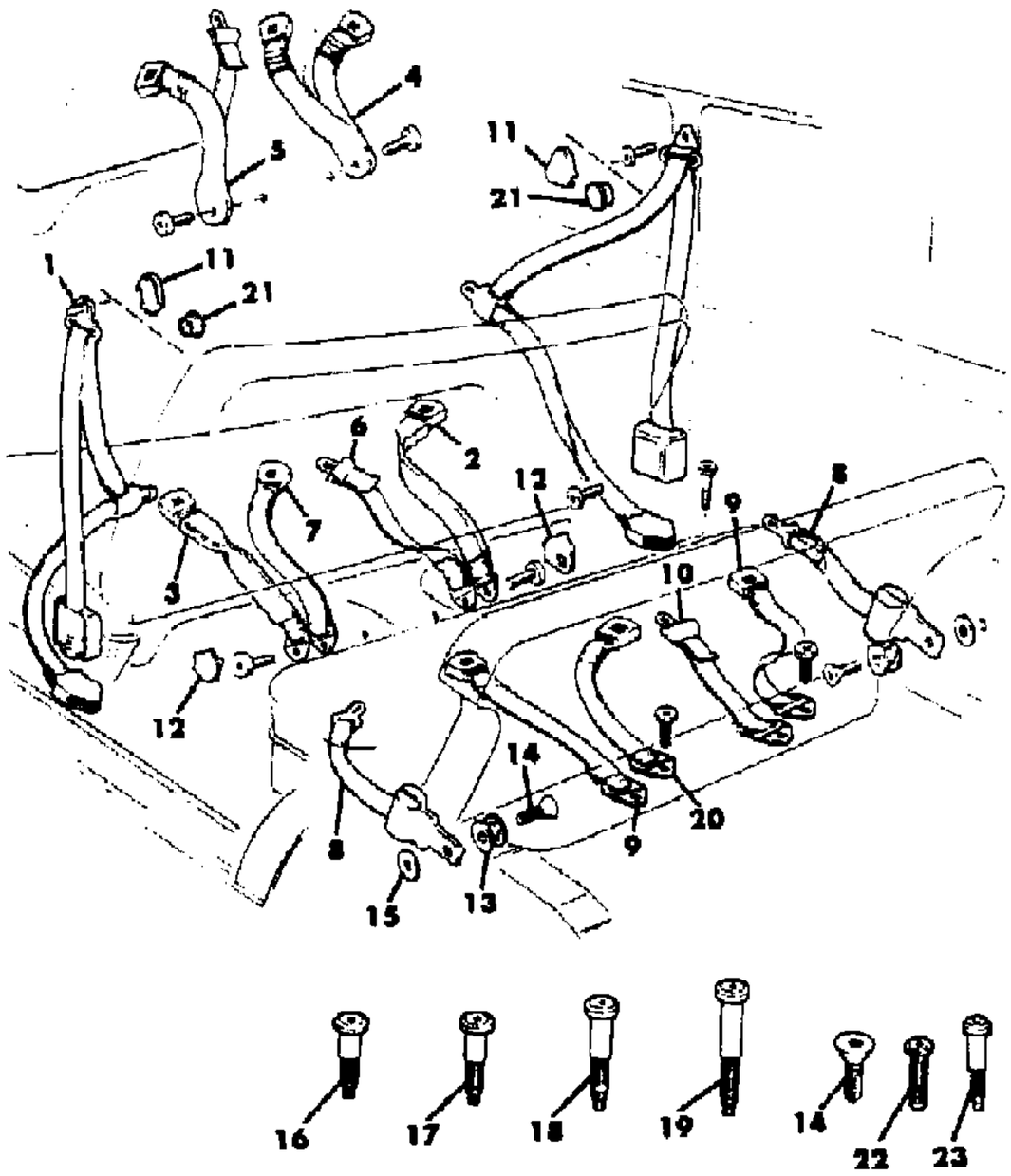

ITEM	PART NUMBER	QTY	BODY	MODEL	DESCRIPTION
	J576 6728	1			Honey
	J575 5220	1			Nutmeg
11					COVER, Web Guide
	5500 3382	2			Almond
	J576 3328	2			Beige
	J576 3327	2			Black
	5500 3381	2			Slate Blue
	5500 3383	2			Garnet
	3500 7352	2			Honey
	5500 3384	2			Nutmeg
12	J368 4028	2			COVER, Bolt, P.A.R.
13	J545 1571	2			RETAINER
14	J545 3506	2			SCREW
15	S012 0390	4			WASHER
16	J400 5505	AR			BOLT
17	J400 5506	AR			BOLT
18	J400 5507	AR			BOLT
19	J400 5607	AR			BOLT
20					SEATBELT ***
	J576 5061	1			Almond
	J575 5213	1			Beige
					Black
	J575 4677	1			
	J575 5615	1			Economic Commission of Europe
	J575 4678	1			Medium Blue
	J576 0492	1			Slate Blue
	J576 6730	1			Garnet
	J576 6733	1			Honey
	J575 5212	1			Nutmeg
21					COVER, Web Guide
	J373 6647	2			Beige
	J373 6016	2			Black
	J373 6017	2			Medium Blue
	J374 1445	2			Slate Blue
	J373 6648	2			Nutmeg
22	J400 6832	2			BOLT
23	J400 7124	2			BOLT

MODEL CODES

16=Cherokee 2 Dr.(1981-83)	78=Cherokee 4WD-4 Dr.(1984-86)	64=Comanche 2WD-6 Ft. Box(1986)	25=J-10 Truck 7 Ft. Box(1981-84)
17=Cherokee 2 Dr.(1981-83)	85=CJ-5 (1981-83)	66=Comanche 2WD-7 Ft. Box(1986)	26=J10 Truck 8 Ft. Box(1981-86)
73=Cherokee 2WD-2 Dr.(1984-86)	86=CJ-6(1981)	63=Comanche 4WD-6 Ft. Box(1986)	27=J-20 Truck 8 Ft. Box(1981-86)
74=Cherokee 2WD-4 Dr.(1984-86)	87=CJ-7(1981-86)	65=Comanche 4WD-7 Ft. Box(1986)	15=Wagoneer 4 Dr.(1981-83)
18=Cherokee 4 Dr.(1981-83)	88=CJ-8, Scrambler(1981-86)	15=Grand Wagoneer 4 Dr.(1984-86)	75=Wagoneer 4WD-4 Dr.(1984-86)
77=Cherokee 4WD-2 Dr.(1984-86)			

BODY
CJ=CJ-5, CJ-6, CJ-7, CJ-8, Scrambler(1981-86)
MJ=Comanche Pickup(1986)

STYLES
SJ=Wagoneer(1981-83), Grand Wagoneer(1984-86), Cherokee(1981-83), J-10, J-20(1981-86)
XJ=Wagoneer(1984-86), Cherokee(1984-86)

AR = Use as Required - = Non Illustrated Part P.A.R. = Paint as Required

CARGO COVER SJ CHEROKEE, SJ WAGONEER
Figure 48-3200

81J 048 3200

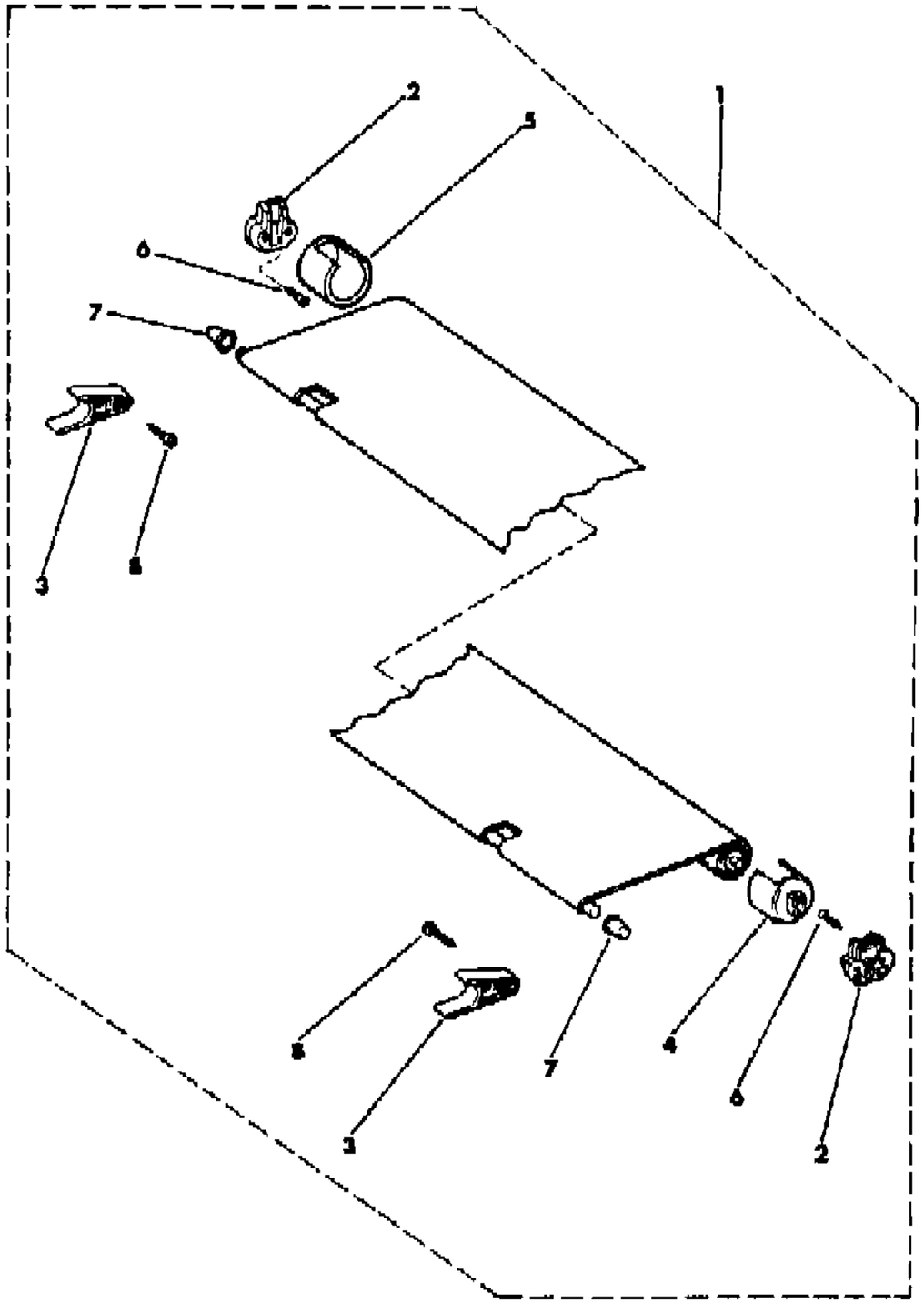

ITEM	PART NUMBER	QTY	BODY	MODEL	DESCRIPTION
1					COVER, Cargo
	J899 7469	1			Almond
	J899 7353	1			Black
	J575 6605	1			Blue, 1981
	J899 7400	1			Blue, 1982-86
	J576 5248	1			Garnet
	J576 5249	1			Honey
	J899 7360	1			Medium Brown
	J575 6606	1			Nutmeg
2	J575 6611	2			BRACKET, Cargo Cover, P.A.R.
3	J575 6615	2			BRACKET, Cargo Cover, P.A.R.
4	J813 3744	1			CAP, Cargo Cover, P.A.R.
5	J813 3745	1			CAP, Cargo Cover, P.A.R.
6	J942 6530	4			SCREW
7	8350 0432	2			CAP, End, P.A.R.
8	J942 2397	4			SCREW

MODEL CODES

16=Cherokee 2 Dr.(1981-83)
17=Cherokee 2 Dr.(1981-83)
73=Cherokee 2WD-2 Dr.(1984-86)
74=Cherokee 2WD-4 Dr.(1984-86)
18=Cherokee 4 Dr.(1981-83)
77=Cherokee 4WD-2 Dr.(1984-86)
78=Cherokee 4WD-4 Dr.(1984-86)
85=CJ-5 (1981-83)
86=CJ-6(1981)
87=CJ-7(1981-86)
88=CJ-8, Scrambler(1981-86)
64=Comanche 2WD-6 Ft. Box(1986)
66=Comanche 2WD-7 Ft. Box(1986)
63=Comanche 4WD-6 Ft. Box(1986)
65=Comanche 4WD-7 Ft. Box(1986)
15=Grand Wagoneer 4 Dr.(1984-86)
25=J-10 Truck 7 Ft. Box(1981-84)
26=J10 Truck 8 Ft. Box(1981-86)
27=J-20 Truck 8 Ft. Box(1981-86)
15=Wagoneer 4 Dr.(1981-83)
75=Wagoneer 4WD-4 Dr.(1984-86)

BODY
CJ=CJ-5, CJ-6, CJ-7, CJ-8, Scrambler(1981-86)
MJ=Comanche Pickup(1986)

STYLES
SJ=Wagoneer(1981-83), Grand Wagoneer(1984-86), Cherokee(1981-83), J-10, J-20(1981-86)
XJ=Wagoneer(1984-86), Cherokee(1984-86)

AR = Use as Required - = Non Illustrated Part P.A.R. = Paint as Required